THE METROPOLITAN WATER DISTRICT OF SOUTHERN CALIFORNIA

Garvey Reservoir Rehabilitation Project

Draft Environmental Impact Report

Volume 2 – Appendices

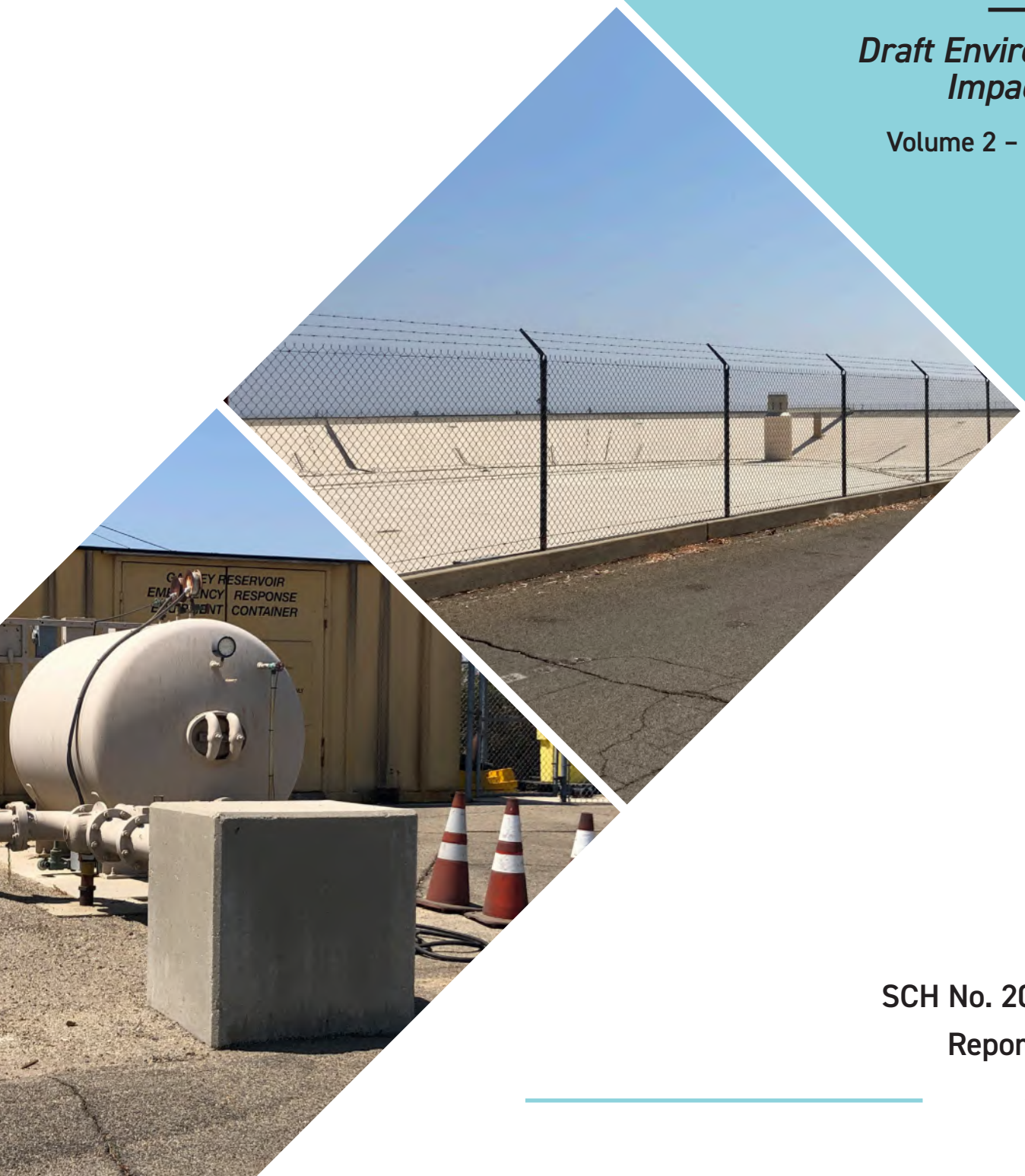

SCH No. 2024010394

Report No. 1642

June 2024

Appendix A

Notice of Preparation/Initial Study and Comment Letters

THE METROPOLITAN WATER DISTRICT OF SOUTHERN CALIFORNIA
700 NORTH ALAMEDA STREET
LOS ANGELES, CALIFORNIA 90012

NOTICE OF PREPARATION OF A DRAFT ENVIRONMENTAL IMPACT REPORT FOR THE GARVEY RESERVOIR REHABILITATION PROJECT

TO: California Office of Planning and Research, Responsible Agencies, Trustee Agencies, Los Angeles County Clerk, Monterey Park Bruggemeyer Library, Other Interested Parties

FROM: The Metropolitan Water District of Southern California
Environmental Planning Section
700 North Alameda Street
Los Angeles, California 90012

SUBJECT: Notice of Preparation of a Draft Environmental Impact Report

PROJECT: Garvey Reservoir Rehabilitation Project

REVIEW PERIOD: January 17, 2024 to February 16, 2024

The Metropolitan Water District of Southern California (Metropolitan) will be the Lead Agency under the California Environmental Quality Act (CEQA) and will prepare a Draft Environmental Impact Report (EIR) for the Garvey Reservoir Rehabilitation Project (proposed Project). The Notice of Preparation (NOP) is being sent to responsible, trustee, and other public agencies, as well as interested organizations and individuals, as part of the review process required under CEQA (Section 21080.4 of the Public Resources Code).

Metropolitan is requesting input from responsible, trustee, and other public agencies, as well as interested organizations and individuals, regarding the scope and content of the environmental information to be included in the Draft EIR. Responsible agencies are requested to indicate their statutory responsibilities in connection with the proposed Project.

PROJECT LOCATION: The Project site is an approximately 142-acre property located at 1061 South Orange Avenue in Monterey Park, California (Assessor's Parcel Numbers 5260-013-910 and 5260-013-905). The Project site is owned by Metropolitan and is developed with the Garvey Reservoir in the central portion of the site along with appurtenant structures and features, including an Administration Building and Water Quality Laboratory, standby generator, sodium hypochlorite tank farm, and junction structure located in the paved yard on the eastern-central portion of the Project site; a surge tank located

immediately south of the reservoir; a construction trailer and paved parking area immediately south of the reservoir; an unpaved construction staging area located immediately northwest of the reservoir; a communications tower and paved parking lot southeast of the reservoir; and paved roadways, power lines, mature trees, site drainage, and landscaping throughout the Project site. The Project site is secured by chain-link perimeter fencing. Figure 1 depicts the project location.

PROJECT DESCRIPTION: The proposed Project involves various upgrades, replacements, and improvements to Metropolitan facilities located at Garvey Reservoir, including but not limited to, replacement of the reservoir floating cover and liner, rehabilitation of the inlet/outlet tower, replacement of five valves in the junction structure, upgrades and redesign of the facility electrical system, replacement of the existing standby generator, improvements to the telemetry equipment associated with the surge tank, re-configuration of and upgrades to the Administration Building and Water Quality Control Laboratory, construction of a new pump station facility, and various site upgrades such as upgrading the ammonia feed system, re-pavement or repair of existing internal roadways, replacement of fencing, installation of stormwater control improvements, landscaping removal and/or replacement, and upgrades to security features. Project construction activities would take approximately three years to complete. Operations and maintenance activities at the Garvey Reservoir, including the frequency of staff visits, monthly testing of the standby generator, electricity usage, and water usage in the Administration Building and Water Quality Laboratory, would remain similar to existing conditions once construction activities are completed.

POTENTIAL ENVIRONMENTAL IMPACTS: The environmental impacts of the proposed Project are evaluated in the Initial Study (IS). Effects determined to be "Potentially Significant" will be evaluated further in the Draft EIR. The Draft EIR will consider mitigation measures and feasible project alternatives for all potentially significant impacts.

PUBLIC REVIEW AND COMMENT PERIOD: Per State CEQA Guidelines Section 15082 and Section 21080.4 of the Public Resources Code, Metropolitan requests written comments to the NOP/IS be submitted as soon as possible, but no later than February 16, 2024. Comments should include the name and mailing address and/or email address of a contact person. All parties who have submitted their names and contact information will be placed on the distribution list to receive the Notice of Availability of the Draft EIR. The NOP and Initial Study are available via QR code or Metropolitan's website at: https://www.mwdh2o.com/ceqa.

Online Comment Portal: EP@mwdh2o.com (reference "Garvey Reservoir Rehabilitation Project" in the subject line)

Mail To: Ms. Michelle Morrison
The Metropolitan Water District of Southern California
Environmental Planning Section
P.O. Box 54153
Los Angeles, California 90054-0153

Signature: Jennifer Harriger **Date**: 01-16-2024
Jennifer Harriger
Manager, Environmental Planning Section

Figure 1 Project Location

Imagery provided by Microsoft Bing and its licensors © 2023.

Garvey Reservoir Rehabilitation Project

Proposed Initial Study

The Metropolitan Water District of Southern California
700 North Alameda Street
Los Angeles, CA 90012

Report No. 1642

January 2024

TABLE OF CONTENTS

Contents Page

1. Project Description 1
   1.1 Background 1
   1.2 Purpose and Need 2
   1.3 Project Location and Description 2
   1.4 Project Baseline and Existing Conditions 11
   1.5 Metropolitan Standard Practices 15
   1.6 Other Public Agency Approvals Required 15
2. Initial Study 16
   2.1 Legal Authority and Findings 16
   2.2 Impact Analysis and Significance Classification 17
   2.3 Initial Study and Environmental Checklist Form 18
   2.4 Environmental Factors Potentially Affected 19
   2.5 Determination 20
3. Evaluation of Environmental Impacts 21
   3.1 Aesthetics 21
   3.2 Agricultural Resources 23
   3.3 Air Quality 25
   3.4 Biological Resources 26
   3.5 Cultural Resources 32
   3.6 Energy 36
   3.7 Geology and Soils 38
   3.8 Greenhouse Gas Emissions 42
   3.9 Hazards and Hazardous Materials 44
   3.10 Hydrology and Water Quality 48
   3.11 Land Use and Planning 51
   3.12 Mineral Resources 52
   3.13 Noise 53
   3.14 Population and Housing 55
   3.15 Public Services 56
   3.16 Recreation 57
   3.17 Transportation 58
   3.18 Tribal Cultural Resources 59
   3.19 Utilities and Service Systems 61
   3.20 Wildfire 63
   3.21 Mandatory Findings of Significance 64
4. List of Acronyms 66
5. References 68

Tables

Table 1-1. Permits and Approvals Which May Be Required 15

Figures

Figure 1-1. Regional Project Location 7

Figure 1-2. Project Site Location 8

Figure 1-3. Existing and Proposed Site Facilities 9

Figure 1-4. Site Photographs of Reservoir, I/O Tower, and Junction Structure 12

Figure 1-5. Site Photographs of Administration Building, Water Quality Laboratory, Standby Generator, and Proposed Pump Station Location 13

Figure 1-6. Site Photographs of Surge Tank, Construction Staging Area, and Secondary Access Gate 14

Appendices

A. Metropolitan Standard Practices
B. Jurisdictional Delineation Report
C. Cultural Resources Assessment

1. Project Description

1.1 Background

The Metropolitan Water District of Southern California (Metropolitan) is a regional water wholesaler that provides water for 26 member public agencies that provide drinking water to approximately 19 million people in parts of Los Angeles, Orange, Riverside, San Bernardino, San Diego, and Ventura counties. The mission of Metropolitan is to provide its service area with adequate and reliable supplies of high-quality water to meet present and future needs in an environmentally and economically responsible way.

The Garvey Reservoir Rehabilitation Project (herein referred to as "Project" or "proposed Project") involves various upgrades, replacements, and improvements to Metropolitan facilities located at Garvey Reservoir. Garvey Reservoir was constructed in 1954 as an open, asphaltic concrete-lined potable water storage facility on top of a hill with earth-filled embankments in the city of Monterey Park. As discussed below, extensive improvements were made to the reservoir in and around 1999, including replacing the liner with a multi-layer Hypalon liner and installing an extensive seismic and seepage monitoring system. As a component of Metropolitan's Middle Feeder system, the reservoir receives treated water from the F. E. Weymouth Water Treatment Plant and has a maximum storage volume of 1,600 acre-feet. Garvey Reservoir provides critical hydraulic flexibility by stabilizing flowrates within the Middle Feeder and maintaining deliveries to member agency service connections when pipelines are shut down for maintenance. The area served by Garvey Reservoir is commonly referred to as the "Central Pool" and is interconnected by a matrix of pipelines that range from 48 to 79 inches in diameter. The Central Pool covers major portions of Los Angeles and Orange counties and can be supplied by three of Metropolitan's five water treatment plants (F.E. Weymouth, Robert B. Diemer, and Joseph Jensen water treatment plants). The location, capacity, and elevation of Garvey Reservoir create a hydraulic buffer for these treatment plants and allow for variations in flow within Metropolitan's system to be absorbed by the reservoir, minimizing hydraulic changes that could impact the treatment plants. One of the primary benefits to the reliability of Metropolitan's water delivery system is that water can flow in and out of Garvey Reservoir without the need for pumping. This allows the reservoir to buffer flow changes and automatically react to system changes without mechanical, electrical, or operator intervention.

The State's Division of Drinking Water (DDW) requires that all finished water reservoirs be covered to protect water quality. Floating reservoir covers consist of a thin membrane material that floats on top of the reservoir's water surface. While floating reservoir covers are a cost-effective means of maintaining water quality, the cover material deteriorates over time. If tears develop in the cover material, the potable water supply is susceptible to contamination. In 1983, a floating reservoir cover was installed at Garvey Reservoir. Metropolitan currently has a proactive reservoir cover inspection and maintenance program that includes regular inspections, both above and below the cover, to identify signs of deterioration or damage. This program ensures the floating covers and reservoirs remain in compliance with DDW requirements.

Elevated groundwater levels caused the reservoir to be removed from service in November 1989. Extensive geotechnical testing indicated that regional folding, intensified by the 1987 Whittier Narrows Earthquake, resulted in foundation cracking such that water from the reservoir fed the

underlying groundwater table. Between 1989 and 1999, the reservoir was out of service for repairs and upgrade. Work performed between 1989 and 1999 included:

- Repairing cracks in the cement-paved reservoir bottom;
- Converting the cover installed in 1983 into a bottom liner placed on top of the asphaltic concrete;
- Installing a geo-textile cushion on top of the bottom liner;
- Installing a polypropylene liner on top of the geo-textile cushion;
- Connecting the drainage layer to an alarm system to monitor seepage;
- Installing a polypropylene liner on top of the drainage layer;
- Installing a network of automatic sensing and remote recording piezometers; and
- Installing a new floating cover.

1.2 Purpose and Need

The useful life of a reservoir's floating cover is generally determined by the staff's ability to continue to make repairs to the cover material. As the cover material ages, it becomes more difficult to make effective repairs. Metropolitan's experience has shown that the typical useful life for a floating cover is between 20 and 25 years. The floating cover at Garvey Reservoir was previously replaced in 1999 and is near the end of its useful life. As expected with a cover of this age, staff has experienced increasing incidence of repairs. Specifically, Metropolitan reported 32 tears patched in 2018, 18 tears patched in 2016, and five tears patched in 2015 for the Garvey Reservoir cover (Metropolitan 2019).

In addition to the issues with the cover, several other areas of rehabilitation at Garvey Reservoir have been identified by staff. A new membrane liner and subdrain system are required to collect and convey flows and to reduce excess hydrostatic pressures within the reservoir bottom. In addition, as part of Metropolitan's ongoing efforts to ensure seismic resilience of facilities, studies of the reservoir's inlet/outlet (I/O) tower were conducted. These studies indicate the I/O tower appurtenant and junction structure require seismic upgrades to increase seismic resistance against a maximum credible earthquake event. Replacement of the reservoir's standby generator is planned to ensure reliable operations in the event of a power outage. Finally, construction of a new pump station is proposed to allow for better drought operating conditions and flow range.

1.3 Project Location and Description

1.3.1 Project Location

The Project site is an approximately 142-acre property located at 1061 South Orange Avenue in Monterey Park, California (Assessor's Parcel Numbers 5260-013-910 and 5260-013-905). The Project site is owned by Metropolitan and is developed with the Garvey Reservoir in the central portion of the site along with appurtenant structures and features, including the Administration Building, Water Quality Laboratory, standby generator, sodium hypochlorite tank farm, and junction structure located in the paved yard on the eastern-central portion of the Project site; a surge tank located immediately south of the reservoir; a construction trailer and paved parking area immediately south of the reservoir; an unpaved construction staging area located immediately

northwest of the reservoir; a communications tower and paved parking lot southeast of the reservoir; and paved roadways, power lines, mature trees, and landscaping throughout the Project site. The Project site is secured by chain-link perimeter fencing. The site is regionally accessible from State Route 60 (SR-60), located approximately 0.9 mile south of the Project site and Interstate 10 (I-10), located approximately 1.4 mile north of the Project site. Local access to the Project site is provided by South Orange Avenue, and the Project site has three driveways at the paved yard along South Orange Avenue near the intersection of Tegner Drive. The Project site has a General Plan land use designation of Open Space and is zoned Open Space (O-S) (City of Monterey Park 2020 and 2021a). The Project site is surrounded by residential neighborhoods to the west, north, south, and east; Hillcrest Elementary School to the east; the Monterey Park City Yard to the north; and Garvey Ranch Park (located on Metropolitan fee property and easement) to the north. Figure 1-1 shows the Project site in a regional context, and Figure 1-2 shows the Project site in a local context. Figure 1-3 shows the location of existing and proposed site facilities.

1.3.2 Project Characteristics

The proposed Project consists of several rehabilitation components and one new component, each of which is described in detail in the following subsections. The location of each Project component is shown on Figure 1-3 under Section 1.3.1, *Project Location*.

Reservoir Cover and Liner

The Garvey Reservoir floating cover is a weight-tensioned type cover that is approximately 1,900,000 square feet in size. A series of weights and floats are placed on top of the cover. Sand-filled weight tubes create troughs that serve as rainwater collection channels. In addition, the floating cover is equipped with 13 rainwater removal pumps. The existing polypropylene floating cover and flexible membrane liner were installed between 1996 and 1999. The proposed Project includes the following items related to the reservoir cover and liner:

- Redesign of the I/O tower float assembly;
- Replacement of the polypropylene liner and disposal of the existing liner material;
- Inspection of the reservoir drainage system underneath the liner (including the underlying geo-textile cushion, underdrain, circulation piping) and peripheral piping and repair or upgrade of the system and piping, if needed;
- Upgrade of the leak detection and monitoring system;
- Installation of a new floating cover;
- Completion of start-up testing procedures including cover inflation, chlorination, emergency dewatering, and instrument testing.

I/O Tower Rehabilitation

Garvey Reservoir is equipped with an I/O tower located at the east end of the reservoir. The I/O tower was originally designed for control flexibility, and water flows in or out of the reservoir at various elevations of the I/O tower by the operation of gates located at different elevations. The proposed Project includes seismic rehabilitation of the I/O tower and access bridge. Equipment within the I/O tower and lighting fixtures along the access bridge would also likely be upgraded

and replaced. In addition, whether or not the fixtures along the access bridge are replaced, LED lights would be installed in the fixtures.

Junction Structure

The existing junction structure, which was originally constructed in the 1950s, is located to the east of the Administration Building, directly adjacent to South Orange Avenue. The majority of the junction structure is located underground in a subterranean vault with only the roof and access stairway visible at street-level. The function of the junction structure is essential to water distribution within the Central Pool through the Middle Feeder.

The proposed Project includes replacement of five valves in the junction structure to improve reliability. This component of the proposed Project requires review and approval by the California Department of Water Resources Division of Safety of Dams because a different type of valve would be installed to improve performance. The Division of Safety of Dams regulates these valves because they are required for emergency dewatering of the Garvey Reservoir.

The timing of implementation of this proposed Project component is contingent on several factors, including:

1. The reservoir and junction structure cannot be out of service at the same time;
2. The pipelines within the junction structure cannot all be out of service at the same time; and
3. Upstream and downstream pipelines of the junction structure, such as those distributing water from the Robert B. Diemer and/or Joseph Jensen water treatment plants, must be in service to accommodate a partial junction structure shutdown.

Facility Electrical System

The facility electrical system, which includes instrumentation at the Project site, is aged and outdated, which presents maintenance challenges in that some replacement parts are no longer carried by manufacturers. In addition to an aging electrical system, upgrade and/or redesign of the existing electrical system is needed to provide consistent power sources (240-volt to 480-volt), and to replace relays at the switchgear unit, the control panel, and other items. Most of the proposed Project electrical system work would be located underground between the Administration Building/Water Quality Laboratory and the sodium hypochlorite tank farm.

Standby Generator

The existing standby generator and its appurtenant electrical system, including transfer switches and the switchgear unit, are over 30 years old and have exceeded their useful life. The proposed Project includes replacement of these features along with upgrades to meet current emission and fire codes under the United States Environmental Protection Agency's (USEPA) Emission and Fuel Standards Program. The new generator would likely be larger than the existing generator. The existing concrete block building housing the generator would be demolished. The new generator would either be in the open air under a canopy structure or would be in a new, enclosed building. The standby generator is located at ground level between the Administration Building/Water Quality Laboratory and the sodium hypochlorite tank farm.

Surge Tank Telemetry

An existing 1,000-gallon surge tank is part of the on-site domestic water system located at the top of the reservoir embankment, immediately south of the reservoir. The tank and its telemetry, including pumps and pressure switch, are from the original reservoir construction in the 1950s. The proposed Project includes improvements to the telemetry equipment connecting the surge tank to the pumps and would install a direct cable from the pumps in the junction structure to the surge tank pressure switch. The Project also includes upgrades to the pressure switches and automated tank controls.

Administration Building and Water Quality Laboratory Rehabilitation

The Administration Building and Water Quality Laboratory are both located within the former chlorination building that was part of the original reservoir construction in the 1950s and later converted to its current functions. The proposed Project includes upgrades and rehabilitation of the interior of the water quality laboratory. The proposed laboratory improvements would enhance efficiency, reliability, and safety while providing a workspace that meets current best practice standards for laboratories to ensure compliance with USEPA and California Department of Public Health water quality regulations. The proposed Project includes the following:

- Design of a new interior plan layout for the entire building;
- Relocation of the existing Water Quality Laboratory to the Administration Building and vice versa;
- Relocation of the emergency eye wash station from outside the Administration Building to immediately adjacent to the Water Quality Laboratory;
- Provision of a new Americans with Disabilities Act (ADA)-compliant parking stall with accessible path of travel to the building entrance;
- Modifications to the existing restroom for compliance with the 2010 ADA Standard for Accessible Design and 2019 California Building Codes (or most recent iteration in effect at the time);
- Reconstruction of a retaining wall on the south side of the building to prevent ponding and overflow from precipitation;
- Upgrades to the water heater, heating, ventilation, and air conditioning (HVAC) system;
- Upgrades to enhance safety features.

Proposed Pump Station

The proposed Project includes the construction of a new pump station adjacent to South Orange Avenue to allow for better drought operating conditions, water quality, and flow range. The new pump station would be approximately 150 feet south of the junction structure and would house multiple pumps and valves to provide operational flexibility. The pump station would be built of concrete and masonry, approximately 500 square feet in size, and partially recessed about 10 feet into the hillside adjacent to South Orange Avenue. A subsurface valve tie-in to the Middle Feeder is also proposed and would be actuated when the pump station is utilized.

Miscellaneous Site Upgrades

Numerous, smaller site components may be repaired or rehabilitated as part of the proposed Project. These miscellaneous upgrades may include:

- Upgrades to the ammonia feed system;
- Repaving or repairing existing reservoir roads;
- Replacement of chain link fencing and gates within property and along the perimeter;
- Improvements to the slopes behind the Administration Building and Water Quality Laboratory to reduce stormwater runoff flows;
- Drainage improvements, landscaping, tree trimming, and/or tree and vegetation removal;
- Replacement of security cameras and gate access/intercom; and
- Installation of security motion-activated lighting by the Administration Building and Water Quality Laboratory.

Figure 1-1. Regional Project Location

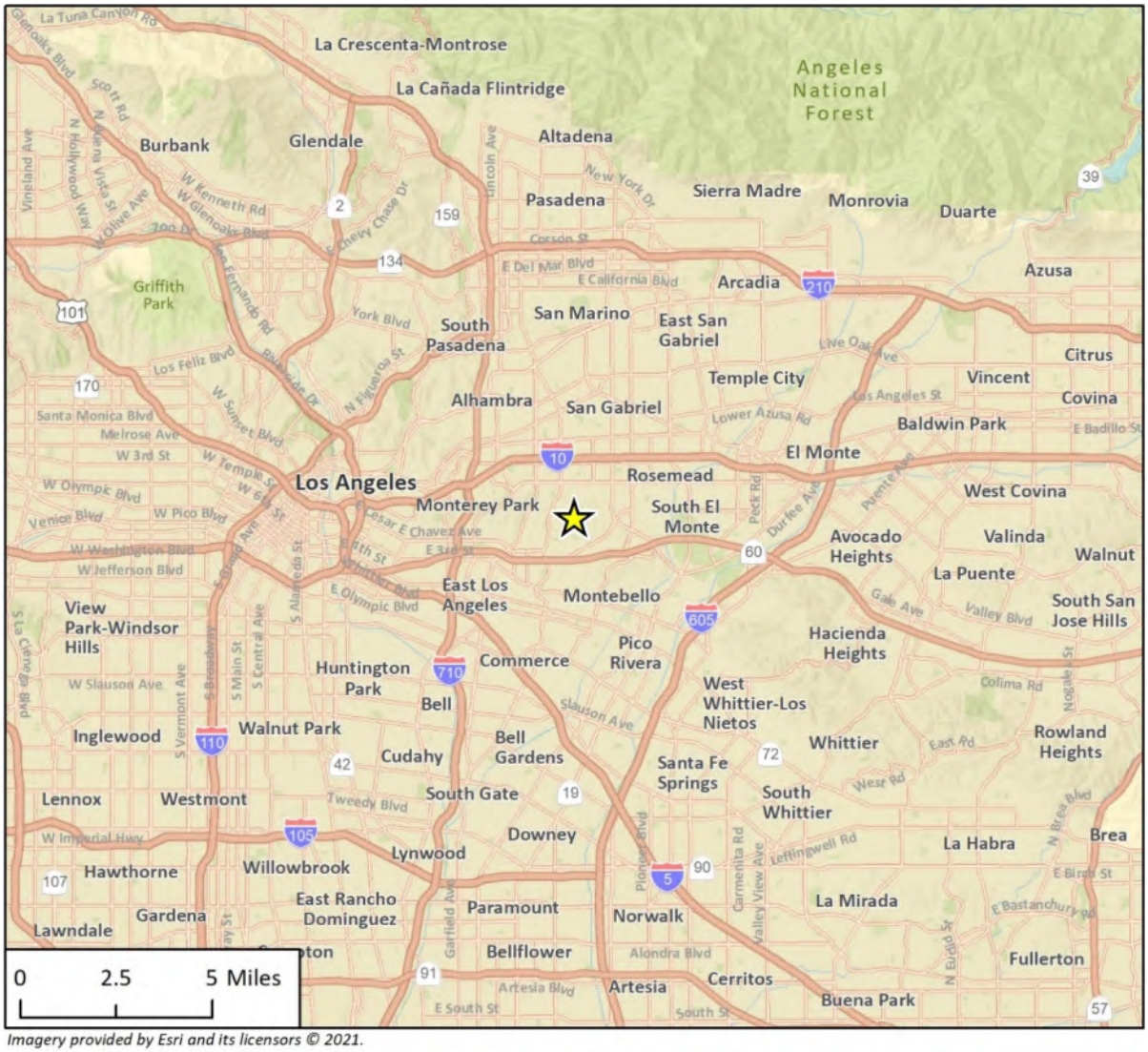

Imagery provided by Esri and its licensors © 2021.

Project Location

N

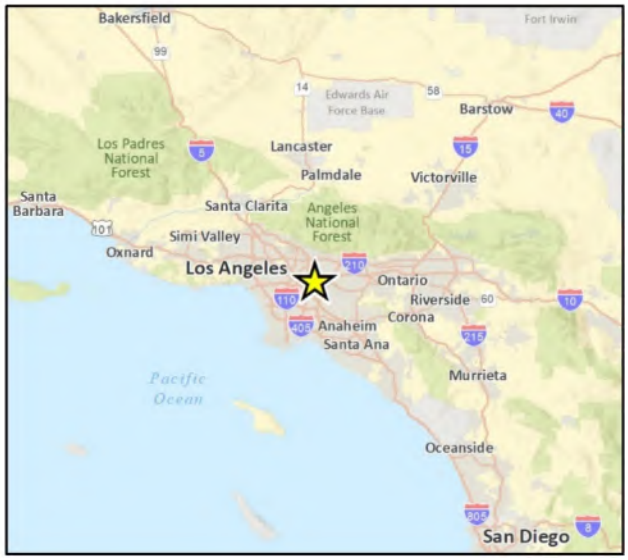

Figure 1-2. Project Site Location

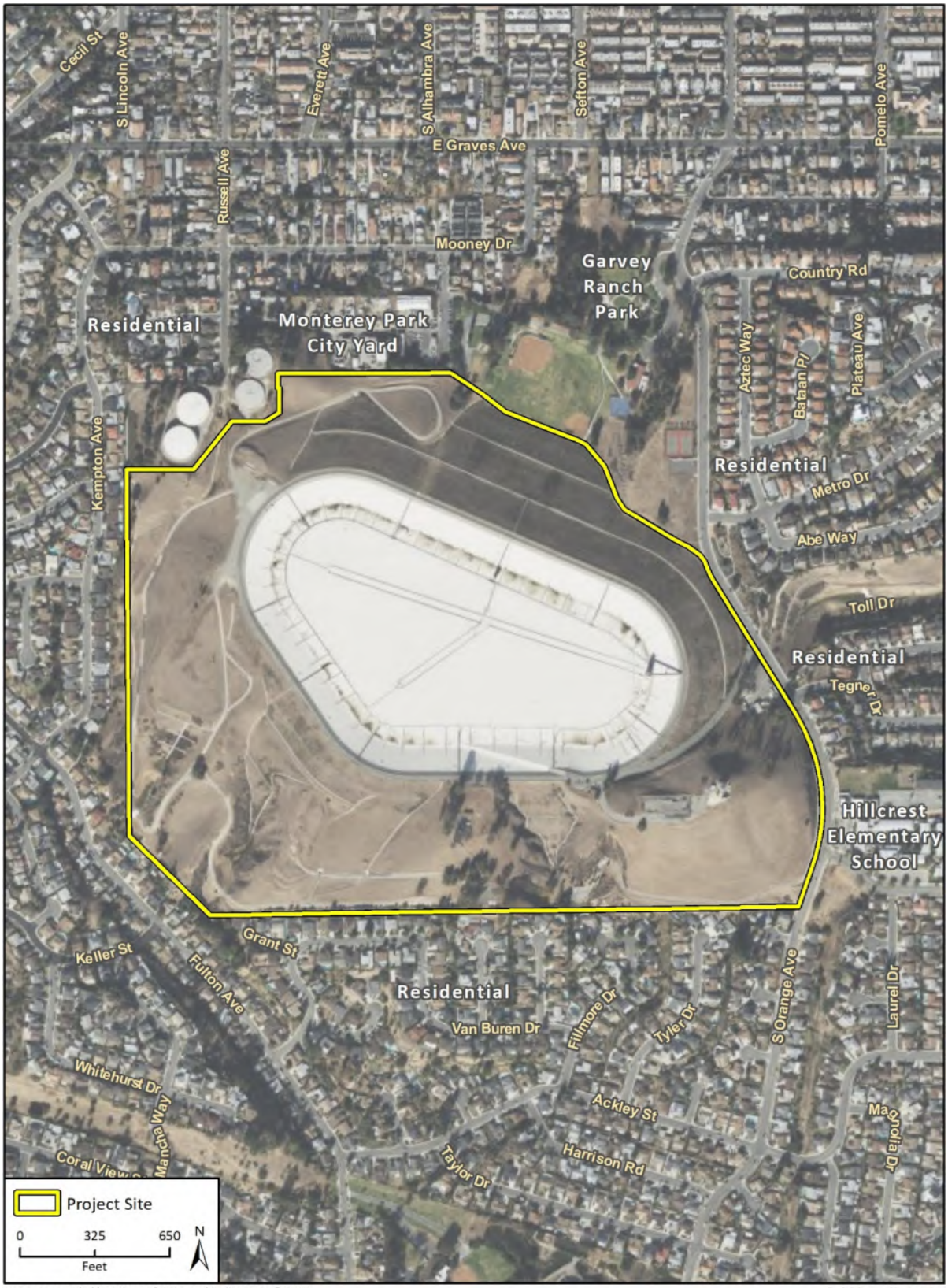

Imagery provided by Microsoft Bing and its licensors © 2021.

Figure 1-3. Existing and Proposed Site Facilities

Imagery provided by Microsoft Bing and its licensors © 2023.

1.3.3 Construction Activities

Project construction activities would take approximately six years to complete. Construction activities would occur in three main phases. The first phase would involve work on the reservoir cover and liner and the I/O tower. The second phase would involve work on the junction structure. Other site work related to the facility electrical system, standby generator, surge tank telemetry, Administration Building, Water Quality Laboratory, and miscellaneous site upgrades would occur simultaneously during both Phases 1 and 2. Phase 3 would occur after Phases 1 and 2 are complete and would involve construction of the proposed pump station and ammonia feed system.

Construction activities would typically occur Monday through Friday, although work may be conducted on Saturdays as needed with the approval of Metropolitan staff. While most of the construction would occur during daytime hours, occasional nighttime construction activities would be required for cover inflation within the reservoir and for reservoir start up activities at the I/O tower, around the perimeter reservoir road, and at the Water Quality Laboratory and sodium hypochlorite tank farm.

Construction staging would occur at an existing, construction staging area located immediately northwest of the reservoir and an existing, partially paved construction trailer area immediately south of the reservoir. Construction worker parking would primarily occur at the construction trailer area as well as at other areas throughout the Project site. If there are space limitations at the site, the Project Contractor(s) would carpool workers from to and from the Project site.

Prior to the start of work in the reservoir, water would be drained from the reservoir through the junction structure into the Middle Feeder. Any water below the intake at the I/O tower would be pumped out and drained through existing v-ditches to the stormwater drainage system. All water discharged to the stormwater drainage system would be dechlorinated prior to discharge.

Replacement of valves in the junction structure would occur after the reservoir has been emptied and re-filled. A crane would be used to replace the valves through the junction structure ground-level vault openings.

Construction of the pump station facility and ammonia feed system would occur after all other Project construction activities at the reservoir are complete.

Lead-based paints and coatings may be present on older mechanical features, such as the valves, epoxy, and I/O tower railings. Asbestos may also be present in some components to be removed or demolished. If lead-based paints and coatings are present, the Project Contractor(s) would comply with California Occupational Safety and Health Administration (CalOSHA) regulations, specifically California Code of Regulations Section 1532.1, which requires testing, monitoring, containment, and disposal of lead-based materials such that exposure levels do not exceed CalOSHA standards. If asbestos is present, the Project Contractor(s) would comply with South Coast Air Quality Management District (SCAQMD) Rule 1403 (Asbestos Emissions from Demolition/Renovation Activities), which requires that the owner or operator of any demolition or renovation activity have an asbestos survey performed prior to demolition.

1.3.4 Operations and Maintenance Activities

Operations and maintenance activities at Garvey Reservoir, including the frequency of staff visits, monthly testing of the standby generator, electricity usage, and water usage in the Administration

Building and Water Quality Laboratory, would be similar to existing conditions once construction activities are completed. The proposed pump station would be an automated, unstaffed facility, and any operations or maintenance to the facility would be completed using existing Metropolitan staff.

1.4 Project Baseline and Existing Conditions

The Project baseline is existing conditions at the Project site when this analysis commenced (2021). As described in Section 1.3.1, *Project Location*, and shown on Figure 1-3, the Project site is developed with a variety of water infrastructure components and accessory structures. Figures 1-4 through 1-6 show photographs of existing conditions at the Project site.

Figure 1-4. Site Photographs of Reservoir, I/O Tower, and Junction Structure

Reservoir, Facing Northeast.

I/O Tower and Access Bridge, Facing West.

Eastern Elevation of Junction Structure, Facing South.

Valve Inside Junction Structure.

Figure 1-5. Site Photographs of Administration Building, Water Quality Laboratory, Standby Generator, and Proposed Pump Station Location

Northern Elevation of Administration Building and Water Quality Laboratory, Facing South

Slopes Behind Administration Building and Water Quality Laboratory, Facing South

Standby Generator Building, Facing Southwest

Proposed Pump Station Location, Facing South

Figure 1-6. Site Photographs of Surge Tank, Construction Staging Area, and Secondary Access Gate

Surge Tank, Facing South

Construction Trailer Area, Facing South

Construction Staging Area, Facing Southwest

Northernmost Secondary Access Gate, Facing Northeast

1.5 Metropolitan Standard Practices

Metropolitan implements standard practices, in addition to stormwater Best Management Practices (BMPs), as part of its standard design and contractor specifications. Standard practices are implemented where applicable, regardless of project size. Metropolitan standard practices are described for each environmental impact category in Section 3 (Evaluation of Environmental Impacts), when applicable. Appendix A contains the complete list and description of Metropolitan Standard Practices.

1.6 Other Public Agency Approvals Required

Table 1-1 lists the anticipated permits and approvals which may be required for Project-related activities.

Table 1-1. Permits and Approvals Which May Be Required

Agency/Department	Permit/Approval	Description
State of California		
California Department of Water Resources - Division of Safety of Dams	Review and Approval of Valve Replacement, and tower modifications	This permit would be required for any modifications to the existing liner, floating cover, outlet tower, and valves.
Regional		
South Coast Air Quality Management District	Permit to Construct	This permit would be required for installation of the new backup generator if it is greater than 50 horsepower (SCAQMD Rule 1470).
	Permit to Operate	This permit would be required for operation of the new backup generator if it is greater than 50 horsepower (SCAQMD Rule 1470).

2. Initial Study

This document is an Initial Study, which addresses the potential environmental effects resulting from the proposed Project and identifies which environmental effects warrant further study in an Environmental Impact Report (EIR).

2.1 Legal Authority and Findings

This Initial Study was prepared in accordance with the California Environmental Quality Act (CEQA), Public Resources Code Section 21000 et seq., and the CEQA Guidelines, California Code of Regulations Section 15000 et seq.

Preliminary Review. Section 15060 of the CEQA Guidelines directs the lead agency to determine whether an activity is subject to CEQA and to begin the formal evaluation of potential environmental issues. If the lead agency determines that an EIR will be clearly required for a project, the agency may skip further initial review of the project and begin work directly on the EIR process.

Initial Study. Section 15063 of the CEQA Guidelines describes an Initial Study as a preliminary method for analyzing the potential environmental consequences of a project. The purposes of an Initial Study include:

(1) Providing the Lead Agency with the necessary information to decide whether to prepare an EIR or a Negative Declaration;

(2) Enabling the Lead Agency to modify a project during the planning stage by mitigating adverse impacts prior to preparation of CEQA documentation, thus avoiding the need to prepare an EIR; and

(3) Providing documentation of the factual basis for the finding in a Mitigated Negative Declaration that the significant environmental impacts of a project have been mitigated to a less-than significant level.

Determining the Significance of the Environmental Effects Caused by a Project. Section 15064 of the CEQA Guidelines provides guidance for when an EIR is prepared:

(1) If there is substantial evidence, in light of the whole record before a lead agency, that a project may have a significant effect on the environment, the agency shall prepare a draft EIR (CEQA Guidelines Section 15064[a][1]).

(2) The determination of whether a project may have a significant effect on the environment calls for careful judgment on the part of the public agency involved, based to the extent possible on scientific and factual data (CEQA Guidelines Section 15064[b][1]).

(3) If the lead agency determines there is substantial evidence in the record that the project may have a significant effect on the environment, the lead agency shall prepare an EIR. Said another way, if a lead agency is presented with a fair argument that a project may have a significant effect on the environment, the lead agency shall prepare an EIR even though it may also be presented with other substantial evidence that the project will not have a significant effect (CEQA Guidelines Section 15064[f][1]).

(4) After application of the principles set forth above in Section 15064(f)(g), and in marginal cases where it is not clear whether there is substantial evidence that a project may have a significant effect on the environment, the lead agency shall be guided by the following principle: If there is disagreement among expert opinion supported by facts over the significance of an effect on the environment, the Lead Agency shall treat the effect as significant and shall prepare an EIR (CEQA Guidelines Section 15064[g]).

(5) When assessing whether a cumulative effect requires an EIR, the lead agency shall consider whether the cumulative impact is significant and whether the effects of the project are cumulatively considerable. An EIR must be prepared if the cumulative impact may be significant and the project's incremental effect, though individually limited, is cumulatively considerable. "Cumulatively considerable" means that the incremental effects of an individual project are significant when viewed in connection with the effects of past projects, the effects of other current projects, and the effects of probable future projects (CEQA Guidelines Section 15064[h][1]).

(6) A lead agency may determine that a project's incremental contribution to a cumulative effect is not cumulatively considerable if the project will comply with the requirements in a previously approved plan or mitigation program (including, but not limited to, water quality control plan, air quality attainment or maintenance plan, integrated waste management plan, habitat conservation plan, natural community conservation plan, plans or regulations for the reduction of greenhouse gas emissions) that provides specific requirements that will avoid or substantially lessen the cumulative problem within the geographic area in which the project is located. Such plans or programs must be specified in law or adopted by the public agency with jurisdiction over the affected resources through a public review process to implement, interpret, or make specific the law enforced or administered by the public agency. When relying on a plan, regulation or program, the lead agency should explain how implementing the particular requirements in the plan, regulation or program ensure that the project's incremental contribution to the cumulative effect is not cumulatively considerable. If there is substantial evidence that the possible effects of a particular project are still cumulatively considerable notwithstanding that the project complies with the specified plan or mitigation program addressing the cumulative problem, an EIR must be prepared for the project (CEQA Guidelines Section 15064[h][3]).

Decision to Prepare an EIR. Section 15081 of the CEQA Guidelines states that the decision to prepare an EIR is made either during preliminary review conducted pursuant to Section 15060 of the CEQA Guidelines or at the conclusion of an Initial Study after applying the standards described in Section 15064 of the CEQA Guidelines.

2.2 Impact Analysis and Significance Classification

The following sections of this Initial Study discuss the possible environmental effects of the proposed Project for specific issue areas as identified on the CEQA Environmental Checklist Form in Appendix G of the CEQA Guidelines (as updated in December 2018). For each issue area, potential effects are analyzed.

A "significant effect on the environment" is defined by Section 15382 of the CEQA Guidelines as "a substantial, or potentially substantial, adverse change in any of the physical conditions within the area affected by a project, including land, air, water, minerals, flora, fauna, ambient noise, and

objects of historic or aesthetic significance. An economic or social change by itself shall not be considered a significant effect on the environment" but "may be considered in determining whether the physical change is significant."

For environmental effects determined to be potentially significant, an EIR will be prepared to fully evaluate the level of significance of these impacts and identify mitigation measures to reduce Project impacts, if needed.

2.3 Initial Study and Environmental Checklist Form

a)	Project Title:	Garvey Reservoir Rehabilitation Project (proposed Project)
b)	Lead Agency Name and Address:	The Metropolitan Water District of Southern California 700 North Alameda Street Los Angeles, CA 90012
c)	Contact Person and Phone Number:	Michelle Morrison Environmental Planning Section The Metropolitan Water District of Southern California (213) 217-7906
d)	Project Location:	The Project site is an approximately 142-acre property located at 1061 South Orange Avenue in Monterey Park, California (Assessor's Parcel Numbers 5260-013-910 and 5260-013-905). The Project site is owned by Metropolitan and is developed with the Garvey Reservoir in the central portion of the site along with appurtenant structures and features. Figure 1-1 in Section 1.3.1 (Project Location) shows the Project site in a regional context, and Figure 1-2 in Section 1.3.1 (Project Location) shows the Project site in a local context. Figure 1-3 in Section 1.3.1 (Project Location) shows the location of existing and proposed site facilities.
e)	Project Sponsor's Name and Address:	The Metropolitan Water District of Southern California 700 North Alameda Street Los Angeles, CA 90012
f)	General Plan Designation:	Open Space (City of Monterey Park General Plan)
g)	Zoning:	Open Space (O-S)

h)	Description of Project:	The Garvey Reservoir Rehabilitation Project involves various upgrades, replacements, and improvements to Metropolitan facilities located at Garvey Reservoir. (Refer to Section 1 for the complete Project Description)
i)	Surrounding Land Uses and Setting:	The Project site is surrounded by residential neighborhoods to the west, north, south, and east; Hillcrest Elementary School to the east; the Monterey Park City Yard to the north; and Garvey Ranch Park to the north.
j)	Other Agencies Whose Approval May be Required:	Refer to Table 1-1 in Section 1.6 (Other Public Agency Approvals Required).
k)	Have California Native American tribes traditionally and culturally affiliated with the Project area requested consultation pursuant to Public Resources Code section 21080.3.1? If so, has consultation begun?	Three Native American tribes traditionally and culturally affiliated with the Project area have requested notification pursuant to PRC Section 21080.3.1. Consultation requests will be sent and results of consultation will be documented in the Draft EIR.

2.4 Environmental Factors Potentially Affected

The environmental factors checked below would be potentially affected by this Project and will be evaluated further in an EIR as indicated by the checklist boxes on the following pages that are marked "Potentially Significant."

☐ Aesthetics	☐ Agriculture & Forestry Resources	☒ Air Quality
☐ Biological Resources	☐ Cultural Resources	☐ Energy
☐ Geology/Soils	☒ Greenhouse Gas Emissions	☐ Hazards & Hazardous Materials
☐ Hydrology/Water Quality	☐ Land Use/Planning	☐ Mineral Resources
☒ Noise	☐ Population/Housing	☐ Public Services
☐ Recreation	☒ Transportation	☒ Tribal Cultural Resources
☐ Utilities/Service Systems	☐ Wildfire	☒ Mandatory Findings of Significance

2.5 Determination

On the basis of this initial evaluation:

☐ I find that the proposed Project COULD NOT have a significant effect on the environment, and a NEGATIVE DECLARATION will be prepared.

☐ I find that although the proposed Project could have a significant effect on the environment, there will not be a significant effect in this case because revisions in the Project have been made by or agreed to by the Project proponent. A MITIGATED NEGATIVE DECLARATION will be prepared.

☒ I find that the proposed Project MAY have a significant effect on the environment, and an ENVIRONMENTAL IMPACT REPORT is required.

☐ I find that the proposed Project may have a "potentially significant impact" or "potentially significant unless mitigated" impact on the environment, but at least one effect (1) has been adequately analyzed in an earlier document pursuant to applicable legal standards, and (2) has been addressed by mitigation measures based on the earlier analysis as described on attached sheets. An ENVIRONMENTAL IMPACT REPORT is required, but it must analyze only the effects that remain to be addressed.

☐ I find that although the proposed Project could have a significant effect on the environment, because all potentially significant effects (a) have been analyzed adequately in an earlier EIR pursuant to applicable standards, and (b) have been avoided or mitigated pursuant to that earlier EIR or Negative Declaration, including revisions or mitigation measures that are imposed upon the proposed Project, nothing further is required.

Jennifer Harriger 01-09-2024

Jennifer Harriger Date

Manager, Environmental Planning Section

3. Evaluation of Environmental Impacts

The following discussion addresses impacts to various environmental resources, per the Environmental Checklist Form contained in Appendix G of the State CEQA Guidelines.

3.1 Aesthetics

AESTHETICS Except as provided in Public Resources Code Section 21099, would the Project:	Potentially Significant Impact	Less than Significant With Mitigation Incorporated	Less than Significant Impact	No Impact
a) Have a substantial adverse effect on a scenic vista?	☐	☐	☐	☒
b) Substantially damage scenic resources, including, but not limited to, trees, rock outcroppings, and historic buildings within a State scenic highway?	☐	☐	☐	☒
c) In non-urbanized areas, substantially degrade the existing visual character or quality of public views of the site and its surroundings? (Public views are those that are experienced from publicly accessible vantage point). If the Project is in an urbanized area, would the Project conflict with applicable zoning and other regulations governing scenic quality?	☐	☐	☐	☒
d) Create a new source of substantial light or glare which would adversely affect day or nighttime views in the area?	☐	☐	☐	☒

Significance criteria established by CEQA Guidelines, Appendix G.

Discussion. Would the Project:

a. Have a substantial adverse effect on a scenic vista?

No Impact. No, the proposed Project would not have a substantial adverse effect on a scenic vista. A scenic vista is defined as a viewpoint that provides panoramic or focused views of a highly valued landscape or scenic resource for the benefit of the general public. The Monterey Park General Plan and Monterey Park Municipal Code (MPMC) do not identify scenic vistas in the city. Thus, the proposed Project would not result in substantial adverse effects on a scenic vista, and no impact would occur. Further analysis in the Draft EIR is not warranted.

b. Substantially damage scenic resources, including, but not limited to, trees, rock outcroppings, and historic buildings within a State scenic highway?

No Impact. No, the proposed Project would not substantially damage scenic resources within a State scenic highway. As described in Section 1.3 (Project Location), the nearest highways to the Project site are SR-60, located approximately 0.9 mile to the south, and I-10, located approximately 1.4 miles to the north. Neither of these highways is a designated State scenic highway (Caltrans 2021). Therefore, no impact to scenic resources within a State scenic highway would occur, and further analysis in the Draft EIR is not warranted.

c. *In non-urbanized areas, substantially degrade the existing visual character or quality of public views of the site and its surroundings? (Public views are those that are experienced from publicly accessible vantage point). If the Project is in an urbanized area, would the Project conflict with applicable zoning and other regulations governing scenic quality?*

No Impact. No, the proposed Project, which is located in an urbanized area, would not conflict with applicable zoning and other regulations governing scenic quality. The Project consists of the rehabilitation of several components of the existing Garvey Reservoir and one new pump station facility. The Project site is zoned O-S (Open Space), which MPMC Section 21.07.010 states is for providing "permanent outdoor recreational and open space resources" and preventing "inappropriate development of areas which should be regulated to provide for recreational, conservation, aesthetic, historic, cultural, scenic or public health and safety uses." The Project site would continue to be zoned O-S and would remain in its current use as a water reservoir. Project activities would primarily occur at locations on the Project site that are not visible to the public, except for activities related to the Administration Building, Water Quality Laboratory, pump station facility, and standby generator located on the eastern portion of the Project site. Rehabilitation or construction at these facilities would not substantially change their exterior appearance and would not conflict with applicable zoning or other regulations governing scenic quality. Therefore, no impact would occur, and further analysis in the Draft EIR is not warranted.

d. *Create a new source of substantial light or glare which would adversely affect day or nighttime views in the area?*

No Impact. No, the proposed Project would not create new sources of substantial light or glare which would adversely affect day or nighttime views in the area. Project construction activities may require temporary nighttime lighting for cover inflation within the reservoir and reservoir start up activities at the I/O tower, along the perimeter reservoir road, and at the Water Quality Laboratory and sodium hypochlorite tank farm. As part of Metropolitan's standard practices for construction discussed in Section 1.5 (Metropolitan Standard Practices), the Project Contractor(s) would be required to exercise special care to direct floodlights to shine downward and to shield them to avoid a nuisance to the surrounding areas, with no lighting including a residence in its direct beam, as outlined in Section 01065 of the construction contractor specifications (Metropolitan 2021; Appendix A). The Project would also include installation of lighting fixtures with LED lights on the I/O tower access bridge; however, these fixtures would not be visible from off-site properties. Security motion-activated lighting would also be installed by the Administration Building and Water Quality Laboratory; however, it would be located approximately 200 feet away from the nearest residence and would only be activated by motion at the Project site during nighttime hours. The Project does not include components with the potential to generate glare. Therefore, no impacts would occur and further analysis in the Draft EIR is not warranted.

3.2 Agricultural Resources

AGRICULTURE AND FORESTRY RESOURCES

In determining whether impacts to agricultural resources are significant environmental effects, Lead Agencies may refer to the California Agricultural Land Evaluation and Site Assessment Model (1997) prepared by the California Department of Conservation as an optional model to use in assessing impacts on agriculture and farmland. In determining whether impacts to forest resources, including timberland, are significant environmental effects, Lead Agencies may refer to information compiled by the California Department of Forestry and Fire Protection regarding the state's inventory of forest land, including the Forest and Range Assessment Project and the Forest Legacy Assessment Project; and forest carbon measurement methodology provided in Forest Protocols adopted by the California Air Resources Board. Would the Project:

		Potentially Significant Impact	Less than Significant With Mitigation Incorporated	Less than Significant Impact	No Impact
a)	Convert Prime Farmland, Unique Farmland, or Farmland of Statewide Importance (Farmland), as shown on the maps prepared pursuant to the Farmland Mapping and Monitoring Program of the California Resources Agency, to non-agricultural use?	☐	☐	☐	☒
b)	Conflict with existing zoning for agricultural use, or a Williamson Act contract?	☐	☐	☐	☒
c)	Conflict with existing zoning for, or cause rezoning of, forest land (as defined in Public Resources Code section 12220(g)), timberland (as defined by Public Resources Code section 4526), or timberland zoned Timberland Production (as defined by Government Code section 51104(g))?	☐	☐	☐	☒
d)	Result in the loss of forest land or conversion of forest land to non-forest use?	☐	☐	☐	☒
e)	Involve other changes in the existing environment which, due to their location or nature, could result in conversion of Farmland, to non-agricultural use or conversion of forest land to non-forest use?	☐	☐	☐	☒

Significance criteria established by CEQA Guidelines, Appendix G.

<u>Discussion</u>. Would the Project:

a. Convert Prime Farmland, Unique Farmland, or Farmland of Statewide Importance (Farmland), as shown on the maps prepared pursuant to the Farmland Mapping and Monitoring Program of the California Resources Agency, to non-agricultural use?

b. Conflict with existing zoning for agricultural use, or a Williamson Act contract?

c. Conflict with existing zoning for, or cause rezoning of, forest land (as defined in Public Resources Code section 12220(g)), timberland (as defined by Public Resources Code section 4526), or timberland zoned Timberland Production (as defined by Government Code section 51104(g))?

d. Result in the loss of forest land or conversion of forest land to non-forest use?

e. Involve other changes in the existing environment which, due to their location or nature, could result in conversion of Farmland, to non-agricultural use or conversion of forest land to non-forest use?

No Impact. No, the proposed Project would not convert Prime Farmland, Unique Farmland, or Farmland of Statewide Importance; conflict with existing zoning for agricultural use, or a Williamson Act contract; conflict with existing zoning for, or cause rezoning of, forest land, timberland, or timberland zoned as Timberland Production; result in the loss of forest land or conversion of forest land to non-forest use; or involve other changes in the existing environment which, due to their location or nature, could result in the conversion of Farmland to non-agricultural use or conversion of forest land to non-forest use.

The Project site has been in use as a water storage reservoir since its construction in 1954, and the Project site is not designated as Prime Farmland, Unique Farmland, or Farmland of Statewide (California Department of Conservation [DOC] 2016). The Project site is not zoned for agricultural use or under a Williamson Act contract, and no farmland exists within or adjacent to the Project site (City of Monterey Park 2021a; DOC 2018). The Project site is also not zoned for forest land or timberland, and no forest land exists within or adjacent to the Project site (City of Monterey Park 2021a). Thus, no impacts to agriculture and forestry would occur as a result of the proposed Project, and further analysis in the Draft EIR is not warranted.

3.3 Air Quality

AIR QUALITY

Where available, the significance criteria established by the applicable air quality management district or air pollution control district may be relied upon to make the following determinations. Would the Project:	Potentially Significant Impact	Less than Significant With Mitigation Incorporated	Less than Significant Impact	No Impact
a) Conflict with or obstruct implementation of the applicable air quality plan?	☒	☐	☐	☐
b) Result in a cumulatively considerable net increase of any criteria pollutant for which the Project region is non-attainment under an applicable Federal or State ambient air quality standard?	☒	☐	☐	☐
c) Expose sensitive receptors to substantial pollutant concentrations?	☒	☐	☐	☐
d) Result in other emissions (such as those leading to odors) adversely affecting a substantial number of people?	☒	☐	☐	☐

Significance criteria established by CEQA Guidelines, Appendix G.

Discussion. Would the Project:

a. Conflict with or obstruct implementation of the applicable air quality plan?

b. Result in a cumulatively considerable net increase of any criteria pollutant for which the Project region is non-attainment under an applicable Federal or State ambient air quality standard?

c. Expose sensitive receptors to substantial pollutant concentrations?

d. Result in other emissions (such as those leading to odors) adversely affecting a substantial number of people?

Potentially Significant Impact. Yes, the proposed Project may conflict with or obstruct implementation of the applicable air quality plan; result in a cumulatively considerable net increase of criteria pollutants for which the Project region is non-attainment under applicable federal and State ambient air quality standards; expose sensitive receptors to substantial pollutant concentrations; and result in other emissions (such as those leading to odors) adversely affecting a substantial number of people.

The proposed Project is located in the South Coast Air Basin, which is regulated by the SCAQMD. During construction activities, emissions would result from the operation of construction vehicles and equipment for grading, retrofitting, structural demolition or remodeling, haul trips for demolished materials, and transport of workers and materials to and from the work site. Operations and maintenance activities at Garvey Reservoir would remain similar to existing conditions once construction activities are completed. Therefore, air quality impacts may be potentially significant, and an air quality technical study shall be prepared to further analyze this topic. The Project's air quality impacts will be detailed further in the Draft EIR, and feasible mitigation measures, as required, will be proposed.

3.4 Biological Resources

BIOLOGICAL RESOURCES Would the Project:	Potentially Significant Impact	Less than Significant With Mitigation Incorporated	Less Than Significant Impact	No Impact
a) Have a substantial adverse effect, either directly or through habitat modifications, on any species identified as a candidate, sensitive, or special-status species in local or regional plans, policies, or regulations, or by the California Department of Fish and Game or U.S. Fish and Wildlife Service?	☐	☐	☐	☒
b) Have a substantial adverse effect on any riparian habitat or other sensitive natural community identified in local or regional plans, policies, regulations or by the California Department of Fish and Game or U.S. Fish and Wildlife Service?	☐	☐	☐	☒
c) Have a substantial adverse effect on state or federally protected wetlands (including, but not limited to, marsh, vernal pool, coastal, etc.) through direct removal, filling, hydrological interruption, or other means?	☐	☐	☐	☒
d) Interfere substantially with the movement of any native resident or migratory fish or wildlife species or with established native resident or migratory wildlife corridors, or impede the use of native wildlife nursery sites?	☐	☐	☐	☒
e) Conflict with any local policies or ordinances protecting biological resources, such as a tree preservation policy or ordinance?	☐	☐	☐	☒
f) Conflict with the provisions of an adopted Habitat Conservation Plan, Natural Community Conservation Plan, or other approved local, regional, or State habitat conservation plan?	☐	☐	☐	☒

Significance criteria established by CEQA Guidelines, Appendix G.

REGULATORY FRAMEWORK

The following is a summary of the regulatory context under which biological resources are managed at the federal, state, and local levels. Many federal and state statutes provide a regulatory structure that guides the protection of biological resources. Agencies with the responsibility for protection of biological resources include:

- United States Army Corps of Engineers (USACE) (wetlands and other waters of the United States);
- Regional Water Quality Control Board (RWQCB) (waters of the State);
- United States Fish and Wildlife Service (USFWS) (federally-listed species and migratory birds); and
- California Department of Fish and Wildlife (CDFW) (fish and wildlife resources of the State, lakes and streambeds, waters of the State, and state-listed species).

Sensitive habitats are vegetation types, associations, or sub-associations that support concentrations of special-status plant or wildlife species, are of relatively limited distribution, or are of particular value to wildlife.

Listed species are those taxa that are formally listed as endangered or threatened by the federal government (e.g., USFWS), pursuant to the Endangered Species Act (ESA), or as endangered, threatened, or rare (for plants only) by the State of California, pursuant to the California Endangered Species Act (CESA) or the California Native Plant Protection Act. Some species are considered rare (but not formally listed) by resource agencies, organizations with biological interests/expertise (e.g., Audubon Society, California Native Plant Society [CNPS], The Wildlife Society), and the scientific community. These species do not receive statutory protection, but may be considered during federal and State environmental review.

METHODOLOGY

Biological conditions were evaluated by confirming applicable regulations, policies, and standards; reviewing biological literature and querying available databases pertinent to the Project site and vicinity (within five miles for CDFW's California Natural Diversity Data Base [CNDDB] [CDFW 2021a and 2021b] and within nine topographic quadrangles for CNPS' Inventory of Rare and Endangered Plants of California [CNPS 2021]); and conducting a reconnaissance-level biological survey of the Project site. Prior to conducting the biological survey, a variety of literature was reviewed to obtain baseline information about the biological resources with potential to occur within the Project site and surrounding area, including databases from CDFW, USFWS, and the CNPS. Refer to Section 5 (References) for a full list of literature reviewed.

On July 22, 2021, biologist Michael Crowley from Rincon Consultants, Inc. conducted a reconnaissance-level biological survey of the Project site. Rincon Consultant Inc.'s biologist performed the survey by walking and driving throughout the Project site to document existing site conditions and the potential presence of regulated biological resources, including special-status plant and wildlife species, sensitive plant communities, jurisdictional waters and wetlands, and habitat for nesting birds. Weather conditions were sunny and clear with temperatures in the 60s and 70s (degrees Fahrenheit) with variable winds ranging from one to five miles per hour.

On November 23, 2021, wetland scientist Malek Al-Marayati from Rincon Consultants, Inc. conducted an aquatic resources delineation to assess potential wetlands and non-wetland aquatic resources at two detention basins in the southwest portion of the Project site. Current USACE and SWRCB delineation procedures and guidance were used to identify and delineate any wetlands and/or waters of the United States/State potentially subject to USACE and RWQCB jurisdiction (USACE 1987, 2008a, 2008b, and 2021; Lichvar et al. 2016; SWRCB 2019). Likewise, current CDFW procedures and guidance were used to identify and delineate any streambeds, rivers, or associated riparian habitat potentially subject to CDFW jurisdiction. Additional detail on the survey methodology is provided in the Jurisdictional Delineation Report included as Appendix B.

EXISTING BIOLOGICAL CONDITIONS

Garvey Reservoir is situated within a developed, predominantly residential landscape. Elevation at the Project site ranges from 450 to 580 feet above mean sea level with relatively steep hillslopes (20 to 30 percent grade) directly adjacent to the reservoir. Soils at the Project site are mapped as Counterfeit-Urban land complex with 10 to 35 percent terraced slopes (United States Department of Agriculture [USDA] 2021a). This soil type is not considered hydric (USDA 2021b).

The Project site consists primarily of developed land, which includes areas that have been constructed upon or otherwise physically altered to an extent that native vegetation is no longer

supported. Within the Project site, the hillslopes are dominated by non-native species including low-growing annual grasses (*Avena* sp., *Bromus* spp.) that are regularly maintained, thereby limiting identification of some taxa to the genus level. Additionally, patches of invasive species such as sea fig (*Carpobrotus chilensis*) occur on the hillslopes. Scattered trees are present in three locations on the Project site: (1) near the paved yard on the eastern portion of the Project site (e.g., near the main entrance gate, Administration Building, sodium hypochlorite tank farm, and junction structure); (2) near the construction trailer area on the south side of the reservoir; and (3) on the north end of the Project site by Garvey Ranch Park. These areas are dominated by non-native species including eucalyptus (*Eucalyptus* sp.), elm (*Ulmus* sp.), Mexican fan palm (*Washingtonia robusta*) and pine (*Pinus* sp.), with sparse occurrences of native toyon (*Heteromeles arbutiflolia*) and a single native coast live oak (*Quercus agrifolia*).

In addition to regularly maintained developed land, highly fragmented patches with scattered plant species typical of coastal sage scrub were observed on the south side of the Project site. Species documented included California buckwheat (*Eriogonum fasciculatum*) and sage (*Salvia* sp.).

The two detention basins in the southwest portion of the Project site receive flow from a rainwater collection system as well as surface runoff from adjacent uplands. Flow from the basins is ultimately conveyed into the underground stormwater system. Standing water and saturated soil conditions were observed in both basins at the time of the aquatic resources delineation survey. Vegetation in the basins is dominated by non-native herbaceous species including variable flatsedge (*Cyperus difformis*) and hyssop loosestrife (*Lythrum hyssopifolia*). The basins exhibit indicators of hydric soils, wetland hydrology, and hydrophytic vegetation. However, the evaluation determined that the basins are physically separated from any relatively permanent waterway (RPW), traditional navigable waterway, or non-RPW tributary and are hydrologically connected to receiving waters only though an underground storm drain system that comingles flows from the basins with runoff from the surrounding suburban areas. In accordance with guidance from the USEPA and USACE on CWA jurisdiction following the United States Supreme Court's decision in *Rapanos v. U.S.* (USEPA and USACE 2008), the basins are isolated waters and therefore not waters of the United States pursuant to Section 404 of the CWA. Additionally, the basins are artificial wetlands that are used as part of a rainwater collection system for flood control purposes and are regularly maintained by Metropolitan; therefore, the basins are not waters of the State and are not within the jurisdiction of RWQCB pursuant to Section 401 of the CWA and the Porter-Cologne Water Quality Control Act (SWRCB 2019). Finally, the basins are not part of any river, stream, or lake and therefore are not within the jurisdiction of CDFW pursuant to Section 1602 of the California Fish and Game Code. Additional detail on existing site conditions as they pertain to aquatic resources is provided in the Jurisdictional Delineation Report included as Appendix B.

Wildlife species observed within the Project site were limited to common species, generally adapted to urban and suburban environments, including western fence lizard (*Sceloporus occidentalis*), common side blotched lizard (*Uta stansburiana*), California ground squirrel (*Spermophilus beecheyi*), red-tailed hawk (*Buteo jamaicensis*), northern mockingbird (*Mimus polyglottos*), black phoebe (*Sayornis nigricans*), American crow (*Corvus brachyrhynchos*), Anna's hummingbird (*Calypte anna*), mourning dove (*Zenaida macroura*), California towhee (*Melozone crissalis*), hooded oriole (*Icterus cucullatus*), Bullock's oriole (*Icterus bullockii*), house finch (*Carpodacus mexicanus*), song sparrow (*Melospiza melodia*), and Eurasian collared dove (*Streptopelia decaocto*). No special-status species, nests or nesting behavior were observed.

Nine special-status plants have been documented within five miles of the Project site: lucky morning-glory (*Calystegia felix*), southern tarplant (*Centromadia parryi* ssp. *australis*), Peruvian dodder (*Cuscuta obtusiflora* var. *glandulosa*), many-stemmed dudleya (*Dudleya multicaulis*), Los Angeles sunflower (*Helianthus nuttalii* ssp. *parishii*), mesa horkelia (*Horkelia cuneata* var. *puberula*), Parish's gooseberry (*Ribes divericatum* var. *parishii*), southern mountains skullcap (*Scutellaria bolanderi* ssp. *austromontana*), and Greata's aster (*Symphyotrichum greatae*). Several of the records are historical (more than 50 or 100 years old) or the species have been identified as extirpated. No special-status plant species were observed within the Project site during the reconnaissance survey.

Additionally, 17 special-status wildlife species have been documented within five miles of the Project site: burrowing owl (*Athene cunicularia*), bank swallow (*Riparia riparia*), Swainson's hawk (*Buteo swainsoni*), coastal California gnatcatcher (*Polioptila californica californica*), western yellow-billed cuckoo (*Coccyzus americanus occidentalis*), southwestern willow flycatcher (*Empidonax traillii extimus*), least Bell's vireo (*Vireo bellii pusillus*), pallid bat (*Antrozous pallidus*), western mastiff bat (*Eumpos perotis californicus*), hoary bat (*Lasiurus cinereus),* American badger (*Taxidea taxus*), southern California legless lizard (*Anniella stebbinsi*), California glossy snake (*Arizona elegans occidentalis*), western pond turtle (*Emys marmorata*), coast horned lizard (*Phrynosoma blainvilli*), western spadefoot (*Spea hammondii*), and San Gabriel chestnut snail (*Glyptostoma gabrielense*). Similar to the special-status plant species records, many of the special-status wildlife species records are historical (more than 50 or 100 years old) or the species have been identified as extirpated. No special-status wildlife species were observed within the Project site during the reconnaissance survey.

Discussion. Would the Project:

a. Have a substantial adverse effect, either directly or through habitat modifications, on any species identified as a candidate, sensitive, or special-status species in local or regional plans, policies, or regulations, or by the California Department of Fish and Game or U.S. Fish and Wildlife Service?

No Impact. No, the proposed Project would not have a substantial adverse effect, either directly or through habitat modifications, on any species identified as a candidate, sensitive, or special-status species in local or regional plans, policies, or regulations, or by the CDFW or USFWS.

SPECIAL-STATUS PLANTS

No special-status plant species were observed within the Project site during the reconnaissance survey. The Project site is developed and dominated by non-native and ornamental vegetation as well as paved areas, water infrastructure components, and accessory structures. Special-status plants typically require highly specific, high-quality habitat not found within the Project site. Due to the highly developed condition of the Project site, and regular disturbance, it is unsuitable for rare plants that require specialized habitats. Therefore, all nine special-status plant species were determined to have low or no potential to occur within the Project site, and construction and operational impacts to special-status plants are not expected. No impact would occur, and further analysis in the Draft EIR is not warranted.

SPECIAL-STATUS WILDLIFE

No special-status wildlife species were observed within the Project site during the reconnaissance survey. Similar to special-status plants, special-status wildlife typically require specific, high quality habitat not found within the Project site. Due to the highly developed and regularly disturbed nature of the Project site, as well as its isolation from native habitats in the region, it is not suitable to support special-status wildlife species.

The Project site contains some scattered plant species typical of coastal sage scrub, a habitat type that supports special-status species such as the coastal California gnatcatcher (CAGN; federally threatened and CDFW Species of Special Concern). Federally designated critical habitat for CAGN is located approximately 1.5 miles southeast of the Project site, on the opposite side of SR-60 (USFWS 2021a). CAGN was most recently recorded in the CNDDB in 2017, approximately 0.8 mile southeast of the reservoir within the Southern California Edison Mesa Substation north of SR-60 and at the former Operating Industries, Inc. landfill site south of SR-60 (CDFW 2021a and 2021b). Typical CAGN territories range from two to 14 acres in size, with inland populations having larger home ranges than coastal populations (Atwood and Bontrager 2001). Some plant species typical of coastal sage scrub are present within the Project site approximately 200 feet southeast and over 900 feet west of the proposed construction trailer area. However, these plants occupy small areas (each isolated area is less than two acres) that are highly fragmented and isolated from other CAGN-suitable habitat in the region by surrounding suburban development and highly trafficked travel corridors. As a result, the low quality and scattered assemblage of California buckwheat and coastal sage scrub within the Project site does not provide sufficient habitat to support nesting or foraging CAGN.

Due to the developed nature of the Project site and the low-quality, fragmented nature of the California buckwheat and coastal sage scrub present at the Project site, all 17 special-status wildlife species were determined to have low or no potential to occur within the Project site. As a result, construction and operational impacts to special-status wildlife are not expected. No impact would occur, and further analysis in the Draft EIR is not warranted.

b. *Have a substantial adverse effect on any riparian habitat or other sensitive natural community identified in local or regional plans, policies, regulations or by the California Department of Fish and Game or U.S. Fish and Wildlife Service?*

c. *Have a substantial adverse effect on state or federally protected wetlands (including, but not limited to, marsh, vernal pool, coastal, etc.) through direct removal, filling, hydrological interruption, or other means?*

No Impact. No, the proposed Project would not have a substantial adverse effect on any riparian habitat or other sensitive natural community identified in local or regional plans, policies, or regulations or by the CDFW or USFWS and would not have a substantial adverse impact on state or federally protected wetlands through direct removal, filling, hydrological interruption, or other means.

The reservoir is not currently identified in the National Wetlands Inventory (USFWS 2021b) and water levels within the reservoir are controlled by Metropolitan via flow to various users through underground pipes and tunnels. The reservoir is entirely covered to preserve water quality. The reservoir does not contain habitat valuable to wildlife and is not connected to a traditional

navigable water. Therefore, it is not under the jurisdiction of the CDFW, RWQCB, or USACE, and Project activities related to rehabilitation of the reservoir would not constitute impacts to riparian habitat or jurisdictional waters or wetlands.

The Project site is located within a highly developed and regularly disturbed landscape. Two detention basins were observed during the reconnaissance survey and aquatic resources delineation survey in the southwest portion of the Project site, approximately 1,100 feet from the proposed construction area. However, the basins are actively maintained, artificial wetlands used for flood control purposes, have no significant nexus with a traditional navigable water, and are not part of any lake or streambed system (Appendix B). Therefore, given the absence of CDFW, RWQCB, or USACE jurisdictional wetlands and non-wetland aquatic resources on the Project site, Project activities would result in no impacts to riparian habitat or jurisdictional waters or wetlands, and further analysis in the Draft EIR is not warranted.

d. Interfere substantially with the movement of any native resident or migratory fish or wildlife species or with established native resident or migratory wildlife corridors, or impede the use of native wildlife nursery sites?

No Impact. No, the proposed Project would not interfere substantially with the movement of any native resident or migratory fish or wildlife species or disrupt native nursery sites. The Project site is not located within known regional wildlife movement corridors (Spencer et al. 2010). The Project site is also fenced and isolated from regional open space; as a result, the Project site does not contribute to localized wildlife movement. Therefore, implementation of the Project would not impact existing wildlife movement patterns. Further analysis in the Draft EIR is not warranted.

e. Conflict with any local policies or ordinances protecting biological resources, such as a tree preservation policy or ordinance?

No Impact. No, the proposed Project would not conflict with any local policies or ordinances protecting biological resources. The MPMC does not provide protection for the species of trees observed within the Project site during the reconnaissance survey. Therefore, no impact would occur, and further analysis in the Draft EIR is not warranted.

f. Conflict with the provisions of an adopted Habitat Conservation Plan, Natural Community Conservation Plan, or other approved local, regional, or State habitat conservation plan?

No Impact. No, the proposed Project would not conflict with the provisions of an adopted Habitat Conservation Plan, Natural Community Conservation Plan, or other approved local, regional, or State habitat conservation plans. The Project site is not subject to such plans; therefore, no impact would occur. Further analysis in the Draft EIR is not warranted.

3.5 Cultural Resources

CULTURAL RESOURCES Would the Project:	Potentially Significant Impact	Less than Significant With Mitigation Incorporated	Less than Significant Impact	No Impact
a) Cause a substantial adverse change in the significance of a historical resource pursuant to §15064.5?	☐	☐	☐	☒
b) Cause a substantial adverse change in the significance of an archaeological resource pursuant to §15064.5?	☐	☐	☒	☐
c) Disturb any human remains, including those interred outside of formal cemeteries?	☐	☐	☒	☐

Significance criteria established by CEQA Guidelines, Appendix G.

CULTURAL RESOURCES OVERVIEW

This section provides an analysis of proposed Project impacts on cultural resources, including historical and archaeological resources as well as human remains, and is based on the Cultural Resource Assessment attached as Appendix C.

REGULATORY FRAMEWORK

CEQA requires a Lead Agency to determine whether a project may have a significant effect on historical resources (PRC Section 21084.1) and archaeological resources (PRC Section 21083.2). A historical resource is a resource listed in, or determined to be eligible for listing, in the California Register of Historical Resources (CRHR), a resource included in a local register of historical resources, or any object, building, structure, site, area, place, record, or manuscript that a Lead Agency determines to be historically significant (CEQA Guidelines Section 15064.5[a][1-3]). Resources listed on the National Register of Historic Places are automatically listed on the CRHR, along with State Landmarks and Points of Interest. The CRHR can also include properties designated under local ordinances or identified through local historical resource surveys. In addition, a resource shall be considered historically significant if it:

1. Is associated with events that have made a significant contribution to the broad patterns of California's history and cultural heritage;
2. Is associated with the lives of persons important in our past;
3. Embodies the distinctive characteristics of a type, period, region, or method of construction, or represents the work of an important creative individual, or possesses high artistic values; or
4. Has yielded, or may be likely to yield, information important in prehistory or history.

PRC Section 21083.2(g) defines a unique archaeological resource as an archaeological artifact, object, or site about which it can be clearly demonstrated that, without merely adding to the current body of knowledge, there is a high probability that it:

1. Contains information needed to answer important scientific research questions and that there is a demonstrable public interest in that information;
2. Has a special and particular quality such as being the oldest of its type or the best available example of its type; or

3. Is directly associated with a scientifically recognized important prehistoric or historic event or person.

If it can be demonstrated that a project would cause damage to a unique archaeological resource, the CEQA Lead Agency may require reasonable efforts be made to permit any or all of these resources to be preserved in place or left in an undisturbed state. To the extent that resources cannot be left undisturbed, mitigation measures are required (PRC Section 21083.2[a-b]).

METHODOLOGY

A search of the California Historical Resources Information System (CHRIS) was conducted to identify any previously recorded cultural resources and previously conducted cultural resources studies within the Project Area and a 0.25-mile buffer surrounding it. On November 9, 2021, staff from the South Central Coastal Information Center (SCCIC) at California State University, Fullerton conducted the CHRIS search for the Project site. In addition, Rincon completed a review of the National Register of Historic Places, the CRHR, lists of the California Historical Landmarks and Points of Interest, the Built Environment Resources Directory, and the Archaeological Determination of Eligibility list. Rincon Consultants, Inc. also reviewed a variety of primary and secondary source materials relating to the history and development of the Project site and its surroundings. Sources included, but were not limited to, historical maps and aerial photographs, contemporary newspaper articles, and written histories of the area.

The SCCIC records search did not identify any prehistoric resources within the Project site or within a 0.25-mile buffer. One previously recorded historic-period resource (P-19-190175), a transmission tower that was recorded, evaluated, and recommended ineligible for historic designation, was identified by the search. This resource is within the 0.25-mile buffer but outside the Project site.

A Sacred Lands File (SLF) search was completed by the Native American Heritage Commission (NAHC) with positive results for the Project site. The SLF results do not provide specific details on the nature or precise location of Sacred Lands or whether they are related to any cultural resources recorded by the CHRIS at the SCCIC.

Rincon Consultants, Inc. archaeologist Kyle Montgomery conducted a pedestrian field survey of the Project site on October 12, 2021 to identify archaeological and built environment resources. All areas of the Project site that were accessible were subject to an intensive pedestrian survey. A reconnaissance survey via monocular was performed on any areas that were inaccessible due to steep slopes. No prehistoric archaeological resources were observed on the Project site during this survey; however, several historic-period built environment features that are at least 45 years of age were identified, visually inspected, and documented.

Discussion. Would the Project:

a. *Cause a substantial adverse change in the significance of a historical resource pursuant to §15064.5?*

No Impact. No, the proposed Project would not cause a substantial adverse change in the significance of a historical resource pursuant to CEQA Guidelines Section 15064.5. The Project site contains historic-period built environment features, including the reservoir, I/O tower, Administration Building, Water Quality Laboratory, junction structure, and standby generator

enclosure, that are at least 45 years of age. However, the historical resource evaluation conducted for the Garvey Reservoir property concluded that the property is ineligible for listing in the National Register of Historic Places and CRHR under any significance criteria. Garvey Reservoir is not particularly unique or significant within the context of post-World War II growth, within the context of water conveyance systems, or within the context of any other event or pattern of events in the history of the county, region, state, or nation. The persons associated with the Garvey Reservoir property are not individually significant within a historic context and/or their association with the Garvey Reservoir property is not exemplary of those individuals' productive life. The Garvey Reservoir property does not embody the distinctive characteristics of a type, period, or method of construction; represent the work of a master; or possess high artistic values, and Garvey Reservoir does not have the potential to yield important information in prehistory or history. Therefore, the Garvey Reservoir property is not considered a historical resource pursuant to CEQA Guidelines Section 15064.5(a) (Appendix C). Accordingly, no impact to historical resources would occur, and further analysis in the Draft EIR is not warranted.

b. Cause a substantial adverse change in the significance of an archaeological resource pursuant to §15064.5?

Less than Significant Impact. No, the proposed Project would not cause a substantial adverse change in the significance of an archaeological resource pursuant to CEQA Guidelines Section 15064.5. The Project site is heavily disturbed from the original construction of the reservoir, and no subsequent excavation activities have ever resulted in archaeological resources being discovered on site. In addition, based on the results of the 2021 CHRIS search at the SCCIC and the pedestrian field survey of the Project site, no cultural resources are recorded at the Project site. Therefore, the potential for archaeological resources to be present at the Project site is low. Furthermore, under Metropolitan's standard practices for construction referenced in Section 1.5 (Metropolitan Standard Practices) and listed in Appendix A, if unanticipated archaeological resources are encountered during construction activities, the Project Contractor(s) would be required to comply with Metropolitan standard practices related to the protection of archaeological resources as outlined in Section 01065 of the construction contractor specifications (Metropolitan 2021). These standard practices include ceasing all work immediately within 50 feet of a discovery, notifying the Engineer, and protecting the discovery area, as directed by the Engineer. The Engineer, with the qualified archaeologist, shall make a decision of validity of the discovery and designate an area surrounding the discovery as a restricted area. The Contractor shall not enter or work in the restricted area until the Engineer provides written authorization. As such, impacts to archaeological resources would be less than significant, and further analysis in the Draft EIR is not warranted.

c. Disturb any human remains, including those interred outside of formal cemeteries?

Less than Significant Impact. No, the proposed Project would not disturb human remains, including those interred outside of dedicated cemeteries. The Project site was heavily disturbed from the original construction of the reservoir, and no human remains are known to be present at the Project site. Furthermore, under Metropolitan's standard practices for construction referenced in Section 1.5 (Metropolitan Standard Practices) and listed in Appendix A, should previously undiscovered human remains be encountered, Metropolitan would comply with the State of California's Health and Safety Code Section 7050.5, which states that no further disturbance shall occur until the county coroner has made a determination of origin and disposition of the remains

pursuant to PRC Section 5097.98. Adherence to State of California's Health and Safety Code Section 7050.5 would result in the proper handling and treatment of unexpected human remains. Therefore, impacts to human remains would be less than significant. Further analysis in the Draft EIR is not warranted.

3.6 Energy

Energy Would the Project:	Potentially Significant Impact	Less than Significant With Mitigation Incorporated	Less than Significant Impact	No Impact
a) Result in potentially significant environmental impact due to wasteful, inefficient, or unnecessary consumption of energy resources, during Project construction or operation?	☐	☐	☐	☒
b) Conflict with or obstruct a state or local plan for renewable energy or energy efficiency?	☐	☐	☐	☒

Significance criteria established by CEQA Guidelines, Appendix G.

Discussion. Would the Project:

a. Result in potentially significant environmental impact due to wasteful, inefficient, or unnecessary consumption of energy resources, during Project construction or operation?

No Impact. No, the proposed Project would not result in a potentially significant environmental impact due to wasteful, inefficient, or unnecessary consumption of energy resources.

Energy use during the construction phase would be in the form of fuel consumption (e.g., gasoline and diesel fuel) to operate heavy equipment, light-duty vehicles, machinery, and generators for lighting. Electrical power consumed to construct the Project would be supplied from existing electrical infrastructure in the area and temporary grid power may also be provided to construction trailers or electric construction equipment. Energy use would be temporary in nature, and construction equipment used would be typical of similar-sized construction projects in the region. In addition, the Project Contractor(s) would be required to restrict the idling of heavy-duty diesel motor vehicles in accordance with Title 13 California Code of Regulations Section 2449(d)(3) and Section 2485 and utilize fleets that comply with the California Air Resources Board's Regulation of In-Use (On-Road) Heavy-Duty Diesel-Fueled Vehicles, which governs the accelerated retrofitting, repowering, or replacement of heavy-duty diesel on- and off-road equipment. Construction activities would utilize fuel-efficient equipment consistent with state and federal regulations and comply with state measures to reduce the inefficient, wasteful, or unnecessary consumption of energy. Project Contractor(s) would be required to comply with applicable regulatory construction waste management practices to divert construction and demolition debris. Overall, these practices would result in efficient use of energy, and Project construction activities would require the minimum necessary electricity consumption and would not have an adverse impact on available electricity supplies or infrastructure.

Operations and maintenance activities at Garvey Reservoir would remain similar to existing conditions once construction activities are completed. The new standby generator may result in greater energy consumption because it may be larger in size than the existing generator and therefore consume more diesel fuel during testing and emergency events. Testing and emergency use of the new standby generator would not result in the wasteful, inefficient, or unnecessary consumption of energy because routine maintenance would be conducted based on the minimum requirements to ensure reliability and operation would only occur during infrequent power outage or other emergency events. The proposed pump station may result in a greater consumption of energy in order to operate the new pumps, but the facility would only be used when reservoir operating conditions necessitate pumping. Furthermore, the Project includes modifications to the

existing restroom, modifications or upgrades to the HVAC system, and replacement of the water heater at the Administration Building and Water Quality Laboratory. These Project activities would improve the energy efficiency of existing Metropolitan operations by replacing aging facilities with newer, more efficient types.

Accordingly, Project construction and operation would not result in the wasteful, inefficient, or unnecessary consumption of energy resources. Therefore, no impact would occur, and further analysis in the Draft EIR is not warranted.

b. Conflict with or obstruct a state or local plan for renewable energy or energy efficiency?

No Impact. No, the proposed Project would not conflict with or obstruct a state or local plan for renewable energy or energy efficiency. The California Energy Commission (CEC) is the state's primary energy policy and planning agency. The CEC has adopted Building Energy Efficiency Standards and Appliance Energy Efficiency Standards and has developed energy efficiency goals for existing buildings as well as zero-emission vehicle policies. Aside from the Water Quality Laboratory and Administration Building rehabilitation, the proposed Project does not include construction of new, habitable structures. The Water Quality Laboratory and Administration Building rehabilitation includes updates to improve the energy efficiency of these structures through upgrades to the water heater and HVAC system, among other components.

The City of Monterey Park adopted a Climate Action Plan (CAP) in 2012. The City's CAP sets forth a comprehensive strategy to address greenhouse gas (GHG) emissions related to land use patterns, transportation, building design, energy use, water demand, and waste generation, with a general focus on residential and commercial businesses in the city. Metropolitan is not subject to the Monterey Park CAP because this plan does not address GHG emissions and associated energy usage related to Metropolitan's activities.

In May 2022, Metropolitan adopted its CAP, which includes measures for renewable energy and energy efficiency. Of these measures, Measure EE-1 would be applicable to the proposed Project. This measure focuses on converting all interior and exterior lighting at 50 percent of Metropolitan facilities to LED technologies by 2030 and 100 percent by 2045. The proposed Project includes installing LED lights in the lighting fixtures along the access bridge to the I/O tower and would also incorporate interior and exterior LED lighting in the Administration Building and Water Quality Laboratory. As such, the Project would be consistent with Measure EE-1 of the CAP. Therefore, the Project would not conflict with or obstruct a state or local plan for renewable energy or energy efficiency, and further analysis in the Draft EIR is not warranted.

3.7 Geology and Soils

GEOLOGY AND SOILS Would the Project:	Potentially Significant Impact	Less than Significant With Mitigation Incorporated	Less than Significant Impact	No Impact
a) Directly or indirectly cause potential substantial adverse effects, including the risk of loss, injury, or death involving:				
i) Rupture of a known earthquake fault, as delineated on the most recent Alquist-Priolo Earthquake Fault Zoning Map issued by the State Geologist for the area or based on other substantial evidence of a known fault? Refer to Division of Mines and Geology Special Publication 42.	☐	☐	☒	☐
ii) Strong seismic groundshaking?	☐	☐	☒	☐
iii) Seismic-related ground failure, including liquefaction?	☐	☐	☒	☐
iv) Landslides?	☐	☐	☒	☐
b) Result in substantial soil erosion or the loss of topsoil?	☐	☐	☒	☐
c) Be located on geologic units or soil that is unstable, or that would become unstable as a result of the Project, and potentially result in on- or off-site landslide, lateral spreading, subsidence, liquefaction, or collapse?	☐	☐	☒	☐
d) Be located on expansive soil, as defined in Section 1803.5.3 of the California Building Code (2010), creating substantial direct or indirect risks to life or property?	☐	☐	☐	☒
e) Have soils incapable of adequately supporting the use of septic tanks or alternative wastewater disposal systems where sewers are not available for the disposal of wastewater?	☐	☐	☐	☒
f) Directly or indirectly destroy a unique paleontological resource or site or unique geologic feature?	☐	☐	☒	☐

Significance criteria established by CEQA Guidelines, Appendix G.

Discussion. Would the Project:

a. Directly or indirectly cause potential substantial adverse effects, including the risk of loss, injury, or death involving:

i) Rupture of a known earthquake fault, as delineated on the most recent Alquist-Priolo Earthquake Fault Zoning Map issued by the State Geologist for the area or based on other substantial evidence of a known fault? Refer to Division of Mines and Geology Special Publication 42.

ii) Strong seismic groundshaking?

iii) Seismic-related ground failure, including liquefaction?

iv) Landslides?

Less than Significant Impact. No, the proposed Project would not directly or indirectly cause potential substantial adverse effects, including the risk of loss, injury, or death involving the rupture of an earthquake fault mapped as part of an Alquist-Priolo Earthquake Fault Zone

(APEFZ); strong seismic groundshaking; seismic-related ground failure, including liquefaction; and landslides.

The Project site is not within or in the immediate vicinity of a mapped APEFZ; the nearest mapped APEFZ to the Project site is the East Montebello Fault, located approximately 1.5 miles northeast (DOC 2015 and 2019; City of Monterey Park 2021b). Furthermore, areas of high earthquake risk are not identified in the vicinity of the Project site (California Governor's Office of Emergency Services 2015). Also, the Project site is not located within or directly adjacent to a mapped liquefaction area (California Governor's Office of Emergency Services 2015; DOC 2019). According to Exhibit 4.7-1 of the City of Monterey Park's General Plan Update EIR, the northern and southern portions of the Project site contain areas susceptible to landslides (City of Monterey Park 2019). However, no landslides have been documented in these areas, and both embankments of Garvey Reservoir are engineered slopes under regulation by the California Department of Water Resources Division of Safety of Dams.

The East Montebello Fault is located approximately 1.5 miles northeast of the Project site, thus the potential for ground rupture to occur at the Project site in connection with this fault is considered low. Additionally, the proposed Project involves rehabilitation of several components of the existing Garvey Reservoir and does not include construction of habitable structures. The proposed rehabilitation activities at the I/O tower and the junction structure would involve seismic upgrades to increase the seismic resistance of these structures against a maximum credible earthquake. Design and construction of the proposed Project would conform to the current seismic design provisions of the California Building Code (California Code of Regulations Title 24), as applicable, to minimize potential risks. The Project would not include modifications to the slopes on the northern and southern portions of the Project site that would have the potential to increase the risk of landslides. Thus, the Project would not directly or indirectly cause substantial adverse effects, including the risk of loss, injury, or death, as a result of fault rupture, seismic ground-shaking, seismic-related ground failure (including liquefaction), and landslides. Impacts would be less than significant, and further analysis in the Draft EIR is not warranted.

b. Result in substantial soil erosion or the loss of topsoil?

Less than Significant Impact. No, the proposed Project would not result in substantial soil erosion or the loss of topsoil. The Project site has been previously disturbed from the original construction of Garvey Reservoir. The majority of Project construction activities would occur in areas covered by impervious surfaces and would not result in soil erosion or loss of topsoil. Improvements to the slopes and construction of the pump station and a retaining wall behind the Administration Building and Water Quality Laboratory would require soil disturbance; however, these improvements would contribute to additional stabilization of these slopes, reduce stormwater runoff flows, and prevent ponding and overflow from precipitation and, therefore, would not result in substantial soil erosion. Furthermore, the Project would be subject to the requirements of the National Pollutant Discharge Elimination System (NPDES) Construction General Permit (Order No. 2009-0009-DWQ as amended by 2010-0014-DWQ and 2012-0006-DWQ) because the Project's area of disturbance would be greater than one acre. The Construction General Permit requires the development of a Stormwater Pollution Prevention Plan (SWPPP) to reduce erosion and topsoil loss from stormwater runoff during construction activities. Compliance with the requirements set forth in this permit would require the Project Contractor(s) to implement best management practices (BMPs) during construction to prevent substantial soil erosion or the loss

of topsoil. Compliance with NPDES permit requirements would minimize the potential for Project construction to result in substantial soil erosion or the loss of topsoil. Furthermore, operations and maintenance activities at Garvey Reservoir would be similar to existing conditions once construction activities are completed. As such, Project operation would not have the potential to result in substantial soil erosion or loss of topsoil. Thus, impacts related to soil erosion and loss of topsoil would be less than significant, and further analysis in the Draft EIR is not warranted.

c. *Be located on geologic units or soil that is unstable, or that would become unstable as a result of the Project, and potentially result in on- or off-site landslide, lateral spreading, subsidence, liquefaction, or collapse?*

Less than Significant Impact. No, the proposed Project would not be located on or result in unstable geologic deposits or soils such that on- or off-site landslide, lateral spreading, subsidence, liquefaction, or collapse would potentially occur. The proposed Project involves rehabilitation of several components of the existing Garvey Reservoir. As discussed under items (a)(i) through (a)(iv), no landslides have been documented at the Project site, and both embankments of Garvey Reservoir are engineered slopes under regulation by the California Department of Water Resources Division of Safety of Dams and therefore are regularly monitored and maintained. The Project would not include modifications to slopes susceptible to landslides that would adversely affect soil stability or increase the potential for local or regional landslides, and the Project does not include activities that would increase the potential for subsidence, liquefaction, or collapse. Finally, operations and maintenance activities at Garvey Reservoir would be similar to existing conditions once Project construction is completed. Thus, the Project would not result in on- or off-site landslide, lateral spreading, subsidence, liquefaction, or collapse. Impacts would be less than significant, and further analysis in the Draft EIR is not warranted.

d. *Be located on expansive soil, as defined in Section 1803.5.3 of the California Building Code (2010), creating substantial direct or indirect risks to life or property?*

No Impact. No, the proposed Project would not be located on expansive soil, as defined in Section 1803.5.3 of the California Building Code (2010), creating substantial direct or indirect risks to life or property. According to the City of Monterey Park's General Plan Update EIR, expansive soil conditions throughout the city vary by site (City of Monterey Park 2019). However, the proposed Project primarily involves rehabilitation of several components of the existing Garvey Reservoir and the proposed pump station facility would be unmanned. Therefore, the Project would have no potential to create substantial direct or indirect risks to life or property related to expansive soils. No impact would occur, and further analysis in the Draft EIR is not warranted.

e. *Have soils incapable of adequately supporting the use of septic tanks or alternative wastewater disposal systems where sewers are not available for the disposal of wastewater?*

No Impact. No, the proposed Project does not require the use or installation of septic tanks or alternative wastewater disposal systems. No impact would occur, and further analysis in the Draft EIR is not warranted.

f. Directly or indirectly destroy a unique paleontological resource or site or unique geologic feature?

Less than Significant Impact. No, the proposed Project would not directly or indirectly destroy a unique paleontological resource or unique geologic features. Soils on the Project site were heavily disturbed during the original construction of the reservoir, and no paleontological resources or unique geological features have been recorded on site. The majority of Project construction activities would occur in areas covered by impervious surfaces. Furthermore, under Metropolitan's standard practices for construction referenced in Section 1.5 (Metropolitan Standard Practices) and listed in Appendix A, if unanticipated paleontological resources are discovered during construction activities, the Project Contractor(s) would be required to comply with Metropolitan standard practices related to the protection of paleontological resources as outlined in Section 01065 of the construction contractor specifications (Metropolitan 2021). These standard practices include ceasing all work immediately within 50 feet of a discovery, notifying the Engineer, and protecting the discovery area, as directed by the Engineer. The Engineer, with the qualified paleontologist shall make a decision of validity of the discovery and designate an area surrounding the discovery as a restricted area. The Contractor shall not enter or work in the restricted area until the Engineer provides written authorization. Therefore, impacts to paleontological resources would be less than significant, and further analysis in the Draft EIR is not warranted.

3.8 Greenhouse Gas Emissions

GREENHOUSE GAS EMISSIONS Would the Project:	Potentially Significant Impact	Less than Significant With Mitigation Incorporated	Less than Significant Impact	No Impact
a) Generate greenhouse gas emissions, either directly or indirectly, that may have a significant impact on the environment?	☒	☐	☐	☐
b) Conflict with an applicable plan, policy or regulation adopted for the purpose of reducing the emissions of greenhouse gases?	☒	☐	☐	☐

Significance criteria established by CEQA Guidelines, Appendix G.

GREENHOUSE GAS OVERVIEW

Climate change is the observed increase in the average temperature of the Earth's atmosphere and oceans along with other substantial changes in climate (such as wind patterns, precipitation, and storms) over an extended period of time. Climate change is the result of numerous, cumulative sources of GHG emissions contributing to the "greenhouse effect," a natural occurrence that takes place in Earth's atmosphere and helps regulate the temperature of the planet. GHG emissions occur both naturally and as a result of human activities, such as fossil fuel burning, decomposition of landfill wastes, raising livestock, deforestation, and some agricultural practices. GHGs produced by human activities include carbon dioxide (CO_2), methane, nitrous oxide, hydrofluorocarbons, perfluorocarbons, and sulfur hexafluoride. The global warming potential of a GHG is the potential of a gas or aerosol to trap heat in the atmosphere over a specified timescale (generally, 100 years). Because GHGs absorb different amounts of heat, a common reference gas (CO_2) is used to relate the amount of heat absorbed to the amount of the gas emitted, referred to as "carbon dioxide equivalent" (CO_2e), which is the amount of GHG emitted multiplied by its global warming potential.

REGULATORY FRAMEWORK

In May 2022, Metropolitan adopted a CAP and certified the associated Program EIR. Metropolitan's CAP complies with the requirements of CEQA Guidelines Section 15183.5(b)(1) for a qualified GHG emissions reduction plan, and as such, can be used to streamline and tier CEQA GHG analysis and mitigate for GHG impacts associated with construction and operational activities (Metropolitan 2022). The CAP includes a baseline GHG emissions inventory of Metropolitan's operations from 1990 through 2020 and a GHG emissions forecast through 2045. The CAP established Metropolitan's GHG emissions reduction targets to be consistent with Senate Bill 32 (40 percent reduction below 1990 levels by 2030) and the recently signed Assembly Bill 1279, which codifies the State's goal of achieving carbon neutrality by 2045. The CAP also establishes actions and policies that Metropolitan could implement to achieve its GHG reduction targets.

The CAP includes a suite of GHG emissions reduction measures to be implemented that would reduce Metropolitan's GHG emissions to achieve the adopted emissions reduction targets established in the CAP. By following these emissions reduction measures, Metropolitan would exceed the State's target of 40 percent below 1990 levels by 2030 and make significant progress toward ultimately achieving carbon neutrality by 2045 (Metropolitan 2022).

Discussion. Would the Project:

a. Generate greenhouse gas emissions, either directly or indirectly, that may have a significant impact on the environment?

Potentially Significant Impact. The proposed Project may directly or indirectly generate GHG emissions that may have a significant impact on the environment. Project construction activities would generate temporary GHG emissions through the use of construction vehicles and equipment, haul trips for demolished materials, and transport of workers and materials to and from the work site. In addition, operational emissions may increase upon completion of construction activities due to increased electricity consumption for operation of the pump station facility when reservoir levels and conditions require.

Pursuant to CEQA Guidelines Section 15183.5(a) and 15183.5(b), Metropolitan can streamline the CEQA review of its projects using the GHG emissions analysis completed for the CAP if the proposed Project is consistent with the adopted CAP. Construction and operational GHG emissions generated by the proposed Project will be estimated and analyzed for consistency with the CAP, and an analysis will be conducted to ensure feasible emissions reduction measures listed in the CAP are incorporated into the proposed Project. Although, estimates of GHG emissions will be quantified for CEQA analysis purposes, Metropolitan would also quantify and document actual construction and operational GHG emissions for the Project during Project construction and operational activities. Actual GHG emissions would be tracked, monitored, and reported as described in the CAP. An annual progress report would be prepared, and emissions reporting would be available through a tracking tool on Metropolitan's website.

Although Metropolitan adopted the CAP and certified the associated Program EIR in May 2022, actual analysis has not yet been conducted to determine whether the proposed Project would be consistent with the CAP. Therefore, impacts may be considered potentially significant, and a GHG emissions technical report shall be prepared to further analyze this topic. The proposed Project's impacts will be detailed further in the Draft EIR, and feasible mitigation measures, as required, will be proposed.

b. Conflict with any applicable plan, policy or regulation of an agency adopted for the purpose of reducing the emissions of greenhouse gases?

Potentially Significant Impact. The proposed Project may conflict with applicable plans, policies, or regulations adopted for the purpose of reducing GHG emissions. Although Metropolitan adopted a CAP and certified the associated Program EIR in May 2022, actual analysis has not yet been conducted to determine whether the proposed Project would be consistent with the CAP. Therefore, impacts may be potentially significant, and a GHG emissions technical report shall be prepared to further analyze this topic. The Project's impacts will be detailed further in the Draft EIR, and feasible mitigation measures, as required, will be proposed.

3.9 Hazards and Hazardous Materials

HAZARDS AND HAZARDOUS MATERIALS Would the Project:	Potentially Significant Impact	Less than Significant With Mitigation Incorporated	Less than Significant Impact	No Impact
a) Create a significant hazard to the public or the environment through the routine transport, use, or disposal of hazardous materials?	☐	☐	☒	☐
b) Create a significant hazard to the public or the environment through reasonably foreseeable upset and accident conditions involving the release of hazardous materials into the environment?	☐	☐	☒	☐
c) Emit hazardous emissions or handle hazardous or acutely hazardous materials, substances, or waste within one-quarter mile of an existing or proposed school?	☐	☐	☒	☐
d) Be located on a site which is included on a list of hazardous materials sites compiled pursuant to Government Code Section 65962.5 and, as a result, would it create a significant hazard to the public or the environment?	☐	☐	☐	☒
e) For a Project located within an airport land use plan or, where such a plan has not been adopted, within two miles of a public airport or public use airport, would the Project result in a safety hazard or excessive noise for people residing or working in the Project area?	☐	☐	☐	☒
f) Impair implementation of or physically interfere with an adopted emergency response plan or emergency evacuation plan?	☐	☐	☐	☒
g) Expose people or structures, either directly or indirectly, to a significant risk of loss, injury or death involving wildland fires?	☐	☐	☐	☒

Significance criteria established by CEQA Guidelines, Appendix G.

Discussion. Would the Project:

a. Create a significant hazard to the public or the environment through the routine transport, use, or disposal of hazardous materials?

Less than Significant Impact. No, the proposed Project would not create a significant hazard to the public or the environment through the routine transport, use, or disposal of hazardous materials. Construction of the Project would temporarily increase the transport and use of hazardous materials in the local vicinity of the Project site through the operation of heavy-duty vehicles and equipment. Such substances include diesel fuel, oil, solvents, and other similar materials brought onto the Project site for use and storage during the construction period. As part of Metropolitan's standard practices for construction discussed in Section 1.5 (Metropolitan Standard Practices) and included in Appendix A, the Project Contractor(s) would be required to comply with Metropolitan standard practices related to the proper handling, storage, application, disposal, and clean-up of hazardous materials and disposal of contaminated materials. These standard practices include storing hazardous materials in covered, leak-proof containers when not in use, away from storm drains and heavy traffic areas, and protecting containers from rainfall infiltration. Hazardous materials shall also be stored separately from non-hazardous materials, on a surface that prevents spills from permeating the ground surface, and in an area secure from unauthorized entry at all

times. In addition, incompatible materials shall be stored separately from each other (Metropolitan 2021). Furthermore, the Project Contractor(s) would be required to comply with all applicable federal, state, and local laws and regulations . These regulations and laws include the Hazardous Materials Transportation Act, California Hazardous Material Management Act, and California Code of Regulations Title 22. Operations and maintenance activities at Garvey Reservoir would be similar to existing conditions once construction activities are completed. Diesel fuel for the new standby generator would continue to be stored in a similar location to where it is currently stored for the existing standby generator. Therefore, the Project would not create a significant hazard to the public or the environment through the routine transport, use or disposal of hazardous materials, and impacts would be less than significant. Further analysis in the Draft EIR is not warranted.

b. Create a significant hazard to the public or the environment through reasonably foreseeable upset and accident conditions involving the release of hazardous materials into the environment?

Less than Significant Impact. No, the proposed Project would not create a significant hazard to the public through reasonably foreseeable upset and accident conditions involving the release of hazardous materials into the environment. As part of Metropolitan's standard practices for construction discussed in Section 1.5 (Metropolitan Standard Practices) and included in Appendix A, the Project Contractor(s) would be required to transport, use, and store any hazardous materials during the construction of the proposed Project in accordance with Metropolitan's standard practices related to hazardous materials as well as all applicable state and federal laws. Construction would involve the demolition and/or removal of Project components that may contain asbestos and/or lead-based paint, which could pose hazards if these materials are released into the air. If lead-based paints and coatings are present, the Project Contractor(s) would comply with CalOSHA regulations, specifically California Code of Regulations Section 1532.1, which requires testing, monitoring, containment, and disposal of lead-based materials such that exposure levels do not exceed CalOSHA standards. If asbestos is suspected to be present, the Project Contractor(s) would comply with SCAQMD Rule 1403 (Asbestos Emissions from Demolition/Renovation Activities), which requires the owner or operator of a demolition or renovation activity to have an asbestos survey performed prior to demolition. Compliance with existing regulations and laws would minimize the potential for the Project to create a significant hazard to the public or the environment through reasonably foreseeable upset and accident conditions involving the release of hazardous materials into the environment. Impacts would be less than significant, and further analysis in the Draft EIR is not warranted.

c. Emit hazardous emissions or handle hazardous or acutely hazardous materials, substances, or waste within one-quarter mile of an existing or proposed school?

Less than Significant Impact. No, the proposed Project would not emit hazardous emissions or handle hazardous or acutely hazardous materials, substances, or waste within 0.25 mile of an existing or proposed school such that a significant environmental impact would occur. Hillcrest Elementary School is located approximately 400 feet to the southeast of the proposed construction area at the Project site. As discussed under item (a), the transport, use, and storage of any hazardous materials during the construction of the Project would be conducted in accordance with Metropolitan's standard construction practices related to hazardous materials as well as all applicable local, state and federal laws. Upon completion of construction activities, diesel fuel at the site would be subject to compliance with existing regulations, standards, and guidelines related

to storage, use, and disposal of hazardous materials. Therefore, compliance with existing regulations and laws would minimize the potential for the handling and usage of hazardous materials on the Project site to adversely affect Hillcrest Elementary School. Impacts would be less than significant, and further analysis in the Draft EIR is not warranted.

d. Be located on a site which is included on a list of hazardous materials sites compiled pursuant to Government Code Section 65962.5 and, as a result, would it create a significant hazard to the public or the environment?

No Impact. No, the proposed Project would not be located on or near a list of hazardous materials sites compiled pursuant to Government Code Section 65962.5 (California Department of Toxic Substances Control 2021; California State Water Resources Control Board 2021). No impact would occur, and further analysis in the Draft EIR is not warranted.

e. For a Project located within an airport land use plan or, where such a plan has not been adopted, within two miles of a public airport or public use airport, would the Project result in a safety hazard or excessive noise for people residing or working in the Project area?

No Impact. No, the proposed Project would not result in a safety hazard or excessive noise for people residing or working in the Project Area due to proximity to a public airport or public use airport. The Project site is not located within two miles of a public airport or private airstrip or within the jurisdiction of an airport land use plan (County of Los Angeles 2021). Therefore, no impact related to safety hazards and excessive noise from airport operation would occur, and further analysis in the Draft EIR is not warranted.

f. Impair implementation of or physically interfere with an adopted emergency response plan or emergency evacuation plan?

No Impact. No, the proposed Project would not impair implementation of or physically interfere with an adopted emergency plan or evacuation plan. In the city of Monterey Park, the Los Angeles County Operational Area Emergency Response Plan provides guidance during unique situations requiring an unusual or extraordinary emergency response (County of Los Angeles 2012). Implementation of the Emergency Response Plan would involve coordination with all the facilities and personnel of County government, along with the jurisdictional resources of the cities and special districts within the County, into an efficient organization capable of responding to an emergency using a Standard Emergency Management System, mutual aid, and other appropriate response procedures. Project construction would occur within Metropolitan fee property and would not permanently alter public roadways or change the existing access points at the Project site. Therefore, the Project would not impair implementation of or physically interfere with an adopted emergency response plan or emergency evacuation plan. No impact would occur, and further analysis in the Draft EIR is not warranted.

g. Expose people or structures, either directly or indirectly, to a significant risk of loss, injury or death involving wildland fires?

No Impact. No, the proposed Project would not expose people or structures, either directly or indirectly, to a significant risk of loss, injury or death involving wildland fires. The Project site is not located in a State Responsibility Area or lands classified as a Very High Fire Hazard Severity Zone.

The nearest Very High Fire Hazard Severity Zone or State Responsibility Area is approximately 3.3 miles northwest of the Project site (California Department of Forestry and Fire Protection 2021). Therefore, the Project would have no potential to expose people or structures, either directly or indirectly, to a significant risk of loss, injury or death involving wildland fires. No impact would occur, and further analysis in the Draft EIR is not warranted.

3.10 Hydrology and Water Quality

HYDROLOGY AND WATER QUALITY Would the Project:	Potentially Significant Impact	Less than Significant With Mitigation Incorporated	Less than Significant Impact	No Impact
a) Violate Regional Water Quality Control Board water quality standards or waste discharge requirements or otherwise substantially degrade surface or ground water quality?	☐	☐	☐	☒
b) Substantially decrease groundwater supplies or interfere substantially with groundwater recharge such that the Project may impede sustainable groundwater management of the basin?	☐	☐	☐	☒
c) Substantially alter the existing drainage pattern of the site or area, including through the alteration of the course of a stream or river or through the addition of impervious surfaces, in a manner which would:				
i. Result in substantial erosion or siltation on or off site?	☐	☐	☐	☒
ii. Substantially increase the rate or amount of surface runoff in a manner which would result in flooding on- or off-site?	☐	☐	☐	☒
iii. Create or contribute runoff water which would exceed the capacity of existing or planned stormwater drainage systems or provide substantial additional sources of polluted runoff?	☐	☐	☐	☒
iv. Impede or redirect flood flows?	☐	☐	☐	☒
d) In flood hazard, tsunami, or seiche zones, risk release of pollutants due to Project inundation?	☐	☐	☒	☐
e) Conflict with or obstruct implementation of a water quality control plan or sustainable groundwater management plan?	☐	☐	☐	☒

Significance criteria established by CEQA Guidelines, Appendix G.

<u>Discussion</u>. Would the Project:

a. Violate Regional Water Quality Control Board water quality standards or waste discharge requirements or otherwise substantially degrade surface or ground water quality?

No Impact. No, the proposed Project would not violate RWQCB water quality standards or waste discharge requirements or otherwise substantially degrade surface or ground water quality. The Project would not involve work within waterbodies or create a waste that would be subject to regulation under waste discharge requirements. In addition, the Project site is surrounded by existing residential, commercial, and institutional land uses, and no water bodies are located within 2.5 miles of the Project site (USFWS 2021b). Furthermore, the majority of Project construction activities would occur in areas covered by impervious surfaces, and improvements to the slopes and construction of a retaining wall behind the Administration Building and Water Quality Laboratory would stabilize these slopes, reduce stormwater runoff flows, and prevent ponding and overflow from precipitation. Similar to current operations, rainwater runoff from the replaced cover and Project site would continue to be diverted into the existing storm drain system and would

not otherwise substantially degrade surface water quality. Therefore, the Project would have no impact and further analysis in the Draft EIR is not warranted.

b. *Substantially decrease groundwater supplies or interfere substantially with groundwater recharge such that the Project may impede sustainable groundwater management of the basin?*

No Impact. No, the proposed Project would not substantially decrease groundwater supplies or interfere substantially with groundwater recharge such that the Project may impede sustainable groundwater management of the basin. Project construction activities would not require use of the water table, and no groundwater supplies would be used during Project construction or operation. In addition, the majority of Project construction activities would occur in areas covered by impervious surfaces, and the installation of new impervious surfaces would be minimal and would not have the potential to substantially interfere with groundwater recharge. Therefore, the Project would have no potential impact and further analysis in the Draft EIR is not warranted.

c. *Substantially alter the existing drainage pattern of the site or area, including through the alteration of the course of a stream or river or through the addition of impervious surfaces, in a manner which would:*
   - i) *Result in substantial erosion or siltation on or off site?*
   - ii) *Substantially increase the rate or amount of surface runoff in a manner which would result in flooding on- or off-site?*
   - iii) *Create or contribute runoff water which would exceed the capacity of existing or planned stormwater drainage systems or provide substantial additional sources of polluted runoff?*
   - iv) *Impede or redirect flood flows?*

No Impact. No, the proposed Project would not substantially alter the existing drainage pattern of the site or area in a manner that would result in substantial erosion on or off site; substantially increase the rate or amount of surface runoff in a manner which would result in flooding on or off site; create or contribute runoff water that would exceed the capacity of existing or planned stormwater drainage systems or provide substantial additional sources of polluted runoff water; or impede or redirect flood flows. The majority of Project construction activities would occur in areas covered by impervious surfaces, and the installation of new impervious surfaces would be minimal. In addition, improvements to the slopes and construction of a retaining wall behind the Administration Building and Water Quality Laboratory would further stabilize these slopes, reduce stormwater runoff flows, and prevent ponding and overflow from precipitation, which would reduce existing levels of erosion, stormwater runoff, and flooding at the Project site. Furthermore, operations and maintenance activities at Garvey Reservoir would be similar to existing conditions once construction activities are completed. Therefore, the Project would result in minimal alterations to the existing drainage pattern of the Project site and would have no potential to result in substantial erosion on or off site; substantially increase the rate or amount of surface runoff in a manner which would result in flooding on or off site; create or contribute runoff water that would exceed the capacity of existing or planned stormwater drainage systems or provide substantial additional sources of polluted runoff water; or impede or redirect flood flows. No impacts would occur, and further analysis in the Draft EIR is not warranted.

d. In flood hazard, tsunami, or seiche zones, risk release of pollutants due to Project inundation?

Less than Significant Impact. No, the proposed Project would not result in the potential for pollutants to be released to the environment by inundation of the Project site during flood, tsunami, or seiche events. The Project site is located approximately 21 miles west of the Pacific Ocean; therefore, it is not located in a tsunami zone. In addition, the Project site is not located in a flood hazard zone (Federal Emergency Management Administration 2008). A seiche is a standing wave oscillating in a body of water. A seiche could occur at Garvey Reservoir in the event of an earthquake, should the earthquake produce wave action in the reservoir. However, a seiche could not occur during rehabilitation of the reservoir cover, liner, and I/O tower because the reservoir would be emptied and put out of service for construction to commence. Operations and maintenance activities at Garvey Reservoir would be similar to existing conditions, including maintaining a minimum of seven feet of freeboard from the bottom of the cover to the reservoir crest, once construction activities are completed. If a seiche were to occur during reservoir operation, the risk of release of pollutants due to Project inundation is low because normal operational conditions require at least seven feet of freeboard to the reservoir crest and because the reservoir contains drinking water, which is not a source of pollutants. Additionally, other Metropolitan infrastructure adjacent to the reservoir includes subterranean pipelines that do not contain pollutants. Areas adjacent to Garvey Reservoir include residential homes and Garvey Ranch Park, which would not introduce new potential sources of pollutants to the area. As a result, even if a seiche were to occur, the Project would not increase the risk of release of pollutants because operating conditions would be similar to current operating conditions. Impacts would be less than significant, and further analysis in the Draft EIR is not warranted.

e. Conflict with or obstruct implementation of a water quality control plan or sustainable groundwater management plan?

No Impact. No, the proposed Project would not conflict with or obstruct implementation of a water quality control plan or sustainable groundwater management plan. As discussed under item (a), no water bodies are located on or within 2.5 miles of the Project site (USFWS 2021b). Furthermore, the majority of Project construction activities would occur in areas covered by impervious surfaces, and as discussed under item (b), Project construction activities would not require dewatering of the water table, and no groundwater supplies would be used during Project construction or operation. In addition, the Project would not have the potential to substantially interfere with groundwater recharge. Therefore, no impact would occur, and further analysis in the Draft EIR is not warranted.

3.11 Land Use and Planning

LAND USE PLANNING Would the Project:	Potentially Significant Impact	Less than Significant With Mitigation Incorporated	Less than Significant Impact	No Impact
a) Physically divide an established community?	☐	☐	☐	☒
b) Cause a significant environmental impact due to a conflict with any land use plan, policy, or regulation adopted for the purpose of avoiding or mitigating an environmental effect?	☐	☐	☐	☒

Significance criteria established by CEQA Guidelines, Appendix G.

Discussion. Would the Project:

a. Physically divide an established community?

No Impact. No, the proposed Project would not physically divide an established community. The proposed Project involves rehabilitation of several components of the existing Garvey Reservoir with Metropolitan's fee property. No impact would occur, and further analysis in the Draft EIR is not warranted.

b. Cause a significant environmental impact due to a conflict with any land use plan, policy, or regulation adopted for the purpose of avoiding or mitigating an environmental effect?

No Impact. The proposed Project site has a General Plan land use designation of Open Space and is zoned Open Space (O-S) (City of Monterey Park 2020 and 2021a). No General Plan land use amendment or zone change is proposed, and upon completion of construction activities, the Project site would remain in its current use as a water reservoir. According to Exhibit 4.7-1 of the City of Monterey Park's General Plan Update EIR, the northern and southern portions of the Project site contain areas susceptible to landslides (City of Monterey Park 2019); however, no landslides have been documented by Metropolitan at the Project site. Policy 3.2 of the City's General Plan Safety Element is to "require that hillside developments incorporate measures that mitigate slope failure potential and provide for long-term slope maintenance" (City of Monterey Park 2001). Metropolitan's operation of Garvey Reservoir is consistent with this policy because both embankments of Garvey Reservoir are engineered, maintained slopes under regulation by the California Department of Water Resources Division of Safety of Dams. Operations and maintenance activities at Garvey Reservoir would be similar to existing conditions once construction of the proposed Project is complete. Therefore, the Project would not cause a significant environmental impact due to a conflict with any land use plan, policy, or regulation adopted for the purpose of avoiding or mitigating an environmental effect. No impact would occur, and further analysis in the Draft EIR is not warranted.

3.12 Mineral Resources

MINERAL RESOURCES Would the Project:	Potentially Significant Impact	Less than Significant With Mitigation Incorporated	Less than Significant Impact	No Impact
a) Result in the loss of availability of a known mineral resource that would be of value to the region and the residents of the State?	☐	☐	☐	☒
b) Result in the loss of availability of a locally important mineral resource recovery site delineated on a local general plan, specific plan or other land use plan?	☐	☐	☐	☒

Significance criteria established by CEQA Guidelines, Appendix G.

Discussion. Would the Project:

a. Result in the loss of availability of a known mineral resource that would be of value to the region and the residents of the State?

b. Result in the loss of availability of a locally important mineral resource recovery site delineated on a local general plan, specific plan or other land use plan?

No Impact. No, the proposed Project would not result in the loss of availability of a known mineral resource that would be of value to the region and the residents of the State or the loss of availability of a locally important mineral resource recovery site delineated on a local general plan, specific plan, or other land use plan. The Project site is an existing reservoir; no mineral recovery is occurring at the site currently and the Project site and surrounding properties are not designated or zoned for mineral resource extraction (City of Monterey Park 2020 and 2021a). The Project would not result in changes to the current use of the Project site. Thus, the Project would result in no impacts to mineral resources, and further analysis in the Draft EIR is not warranted.

3.13 Noise

NOISE Would the Project:	Potentially Significant Impact	Less than Significant With Mitigation Incorporated	Less than Significant Impact	No Impact
a) Generation of a substantial temporary or permanent increase in ambient noise levels in the vicinity of the Project in excess of standards established in the local general plan or noise ordinance, or applicable standards of other agencies?	☒	☐	☐	☐
b) Generation of excessive groundborne vibration or groundborne noise levels?	☒	☐	☐	☐
c) For a Project located within the vicinity of a private airstrip or an airport land use plan or, where such a plan has not been adopted, within two miles of a public airport or public use airport, would the Project expose people residing or working in the Project area to excessive noise levels?	☐	☐	☐	☒

Significance criteria established by CEQA Guidelines, Appendix G.

Discussion. Would the Project result in:

a. Generation of a substantial temporary or permanent increase in ambient noise levels in the vicinity of the Project in excess of standards established in the local general plan or noise ordinance, or applicable standards of other agencies?

b. Generation of excessive groundborne vibration or groundborne noise levels?

Potentially Significant Impact. Yes, the proposed Project may generate a substantial temporary or permanent increase in ambient noise levels in excess of applicable standards and may generate excessive groundborne vibration or groundborne noise levels. The nearest sensitive receivers to the Project site are residential neighborhoods approximately 100 feet to the east of the nearest Project component; residential neighborhoods located approximately 400 feet to the west, north, and south of the nearest Project component; and Hillcrest Elementary School located approximately 400 feet to the southeast of the nearest Project component. Project construction activities would temporarily generate an increase in ambient noise and vibration levels at nearby sensitive receivers through the use of heavy-duty construction equipment as well as through increased traffic on South Orange Avenue associated with construction worker travel, material deliveries, and haul trips for demolished materials. Operations and maintenance activities at Garvey Reservoir would be similar to existing conditions once construction activities are completed. Therefore, groundborne noise and groundborne vibration impacts may be potentially significant, and a noise and vibration technical study shall be prepared to further analyze the topic. The Project's noise and vibration impacts will be detailed further in the Draft EIR, and feasible mitigation measures, as required, will be proposed.

c. *For a Project located within the vicinity of a private airstrip or an airport land use plan or, where such a plan has not been adopted, within two miles of a public airport or public use airport, expose people residing or working in the Project area to excessive noise levels?*

No Impact. No, the proposed Project would not expose people working in the Project area to excessive noise levels. The Project site is not located within two miles of a public airport or private airstrip or within the jurisdiction of an airport land use plan (County of Los Angeles 2021). Therefore, the Project would result in no impacts related to the exposure of people working in the Project area to excessive noise levels from airport operations and further analysis in the Draft EIR is not warranted.

3.14 Population and Housing

POPULATION AND HOUSING Would the Project:	Potentially Significant Impact	Less than Significant With Mitigation Incorporated	Less than Significant Impact	No Impact
a) Induce substantial unplanned population growth in an area, either directly (for example, by proposing new homes and businesses) or indirectly (for example, through extension of roads or other infrastructure)?	☐	☐	☐	☒
b) Displace substantial numbers of existing people or housing, necessitating the construction of replacement housing elsewhere?	☐	☐	☐	☒

Significance criteria established by CEQA Guidelines, Appendix G.

Discussion. Would the Project:

a. Induce substantial unplanned population growth in an area, either directly (for example, by proposing new homes and businesses) or indirectly (for example, through extension of roads or other infrastructure)?

No Impact. No, the proposed Project would not directly or indirectly induce substantial unplanned growth in the Project area. The Project does not propose construction of new homes and thus would not directly induce population growth in Monterey Park. The Project does not include construction of new water supply facilities or expansion of the reservoir and therefore would not increase water supply to the region or otherwise indirectly induce population growth. Operations and maintenance activities at Garvey Reservoir would remain similar to existing conditions once construction activities are completed and would not require additional Metropolitan employees. Thus, the Project would not directly or indirectly induce substantial unplanned population growth, and no impact would occur. Further analysis in the Draft EIR is not warranted.

b. Displace substantial numbers of existing people or housing, necessitating the construction of replacement housing elsewhere?

No Impact. No, the proposed Project would not displace substantial numbers of existing people or housing, necessitating the construction of replacement housing elsewhere. The Project site is a reservoir owned by Metropolitan and does not contain occupied dwelling units. As such, the proposed Project would not displace any people or housing, and no impact would occur. Further analysis in the Draft EIR is not warranted.

3.15 Public Services

PUBLIC SERVICES

Would the Project result in substantial adverse physical impacts associated with the provision of new or physically altered governmental facilities, need for new or physically altered governmental facilities, the construction of which could cause significant environmental impacts, in order to maintain acceptable service ratios, response times, or other performance objectives for any of the public services:	Potentially Significant Impact	Less than Significant With Mitigation Incorporated	Less than Significant Impact	No Impact
a) Fire protection?	☐	☐	☐	☒
b) Police protection?	☐	☐	☐	☒
c) Schools?	☐	☐	☐	☒
d) Parks?	☐	☐	☐	☒
e) Other public facilities?	☐	☐	☐	☒

Significance criteria established by CEQA Guidelines, Appendix G.

Discussion.

Would the Project result in substantial adverse physical impacts associated with the provision of new or physically altered governmental facilities, need for new or physically altered governmental facilities, the construction of which could cause significant environmental impacts, in order to maintain acceptable service ratios, response times, or other performance objectives for any of the public services:

a. Fire protection?

b. Police protection?

c. Schools?

d. Parks?

e. Other public facilities?

No Impact. No, the proposed Project would not result in substantial adverse physical impacts associated with the provision of fire protection services, police protection services, schools, parks, and other public facilities. As discussed in Section 3.14 (Population and Housing), the proposed Project would not directly or indirectly induce population growth and thus would not increase demand for fire protection services, police protection services, schools, parks, or other public facilities. Thus, the proposed Project would not result in a need for new or physically altered fire protection services, police protection services, schools, parks, or other public facilities to maintain acceptable service ratios, response times, or other performance objectives, and no impact would occur. Further analysis in the Draft EIR is not warranted.

3.16 Recreation

RECREATION Would the Project:	Potentially Significant Impact	Less than Significant With Mitigation Incorporated	Less than Significant Impact	No Impact
a) Would the Project increase the use of existing neighborhood and regional parks or other recreational facilities such that substantial physical deterioration of the facility would occur or be accelerated?	☐	☐	☐	☒
b) Does the Project include recreational facilities or require the construction or expansion of recreational facilities, which might have an adverse physical effect on the environment?	☐	☐	☐	☒

Significance criteria established by CEQA Guidelines, Appendix G.

Discussion.

a. *Would the Project increase the use of existing neighborhood and regional parks or other recreational facilities such that substantial physical deterioration of the facility would occur or be accelerated?*

No Impact. No, the proposed Project would not increase the use of existing neighborhood and regional parks or other recreational facilities. As discussed in Section 3.14 (Population and Housing), the Project would not directly or indirectly induce population growth that would increase the use of existing neighborhood and regional parks or other recreational facilities. Therefore, no impact would occur to such facilities, and further analysis in the Draft EIR is not warranted.

b. *Does the Project include recreational facilities or require the construction or expansion of recreational facilities, which might have an adverse physical effect on the environment?*

No Impact. No, the proposed Project does not include recreational facilities or require the construction or expansion of recreational facilities. As such, no impact would occur. Further analysis in the Draft EIR is not warranted.

3.17 Transportation

TRANSPORTATION Would the Project:	Potentially Significant Impact	Less than Significant With Mitigation Incorporated	Less than Significant Impact	No Impact
a) Conflict with a program, plan, ordinance, or policy addressing the circulation system, including transit, roadway, bicycle, and pedestrian facilities?	☒	☐	☐	☐
b) Would the Project conflict or be inconsistent with CEQA Guidelines Section 15064.3, subdivision (b)?	☒	☐	☐	☐
c) Substantially increase hazards due to a geometric design feature (5.g., sharp curves or dangerous intersections) or incompatible uses (5.g., farm equipment)?	☒	☐	☐	☐
d) Result in inadequate emergency access?	☒	☐	☐	☐

Significance criteria established by CEQA Guidelines, Appendix G.

Discussion. Would the Project:

a. Conflict with a program, plan, ordinance, or policy addressing the circulation system, including transit, roadway, bicycle, and pedestrian facilities?

b. Would the Project conflict or be inconsistent with CEQA Guidelines Section 15064.3, subdivision (b)?

c. Substantially increase hazards due to a geometric design feature (e.g., sharp curves or dangerous intersections) or incompatible uses (e.g., farm equipment)?

d. Result in inadequate emergency access?

Potentially Significant Impact. The proposed Project may conflict with a program, plan, ordinance, or policy addressing the circulation system, including transit, roadway, bicycle, and pedestrian facilities; may increase hazards due to a geometric design feature or incompatible uses; and may result in inadequate emergency access. Project construction activities would result in a temporary increase in traffic on South Orange Avenue as well as vehicle miles traveled in the local area due to construction worker, material delivery, and demolition hauling trips. As discussed in Section 1.3.1 (Project Location), the Project site has three access driveways at the paved yard along South Orange Avenue near its intersection with Tegner Drive. Because of the limited number and proximity of the site access points, construction traffic may create conflicts for vehicular and non-vehicular traffic on South Orange Avenue due to frequent turning movements of trucks entering and exiting the site. In addition, residences and Hillcrest Elementary School are in proximity to the site. Residential and school land uses are typically more sensitive to the congestion and safety hazards that may be caused by the additional heavy truck traffic associated with Project construction due to potentially low baseline traffic levels on local roadways and frequent road crossings during school drop-off and pick-up times. Furthermore, additional heavy truck traffic on South Orange Avenue may temporarily impede emergency access in the local area if congestion or turning movements block one or more lanes. Therefore, transportation impacts may be potentially significant, and a transportation technical study shall be prepared to further analyze this topic. The Project's transportation impacts will be detailed further in the Draft EIR, and feasible mitigation measures, as required, will be proposed.

3.18 Tribal Cultural Resources

TRIBAL CULTURAL RESOURCES Would the Project:	Potentially Significant Impact	Less than Significant With Mitigation Incorporated	Less than Significant Impact	No Impact
a) Would the Project cause a substantial adverse change in the significance of a tribal cultural resource, defined in Public Resources Code section 21074 as either a site, feature, place, cultural landscape that is geographically defined in terms of the size and scope of the landscape, sacred place, or object with cultural value to a California Native American tribe, and that is:				
i. Listed or eligible for listing in the California Register of Historical Resources, or in a local register of historical resources as defined in Public Resources Code section 5020.1(k)?	☒	☐	☐	☐
ii. A resource determined by the Lead Agency, in its discretion and supported by substantial evidence, to be significant pursuant to criteria set forth in subdivision (c) of Public Resources Code Section 5024.1. In applying the criteria set forth in subdivision (c) of Public Resource Code Section 5024.1, the Lead Agency shall consider the significance of the resource to a California Native American tribe?	☒	☐	☐	☐

Discussion. Would the Project:

a. Would the Project cause a substantial adverse change in the significance of a tribal cultural resource, defined in Public Resources Code section 21074 as either a site, feature, place, cultural landscape that is geographically defined in terms of the size and scope of the landscape, sacred place, or object with cultural value to a California Native American tribe, and that is:

i) Listed or eligible for listing in the California Register of Historical Resources, or in a local register of historical resources as defined in Public Resources Code section 5020.1(k)?

ii) A resource determined by the Lead Agency, in its discretion and supported by substantial evidence, to be significant pursuant to criteria set forth in subdivision (c) of Public Resources Code Section 5024.1. In applying the criteria set forth in subdivision (c) of Public Resource Code Section 5024.1, the Lead Agency shall consider the significance of the resource to a California Native American tribe?

Potentially Significant Impact. Yes, the proposed Project may cause a substantial adverse change in the significance of a tribal cultural resource. Tribal cultural resources are defined as sites, features, places, cultural landscapes, sacred places, and objects with cultural value to a California Native American tribe that are either included or determined to be eligible for inclusion in the CRHR. A formal consultation process with California Native American tribes regarding tribal cultural resources must commence prior to the release of a negative declaration, mitigated negative declaration, or EIR for a project.

Consultation with the three California Native American tribes that have previously requested to be informed through formal notification by Metropolitan of proposed projects in the geographic area that is traditionally and culturally affiliated with those tribes has not been initiated but will be

conducted prior to the release of the Draft EIR. Because consultation has not yet been conducted, impacts to tribal cultural resources may be potentially significant. The Project's impacts will be detailed further in the Draft EIR, and feasible mitigation measures, as required, will be proposed.

3.19 Utilities and Service Systems

UTILITIES AND SERVICE SYSTEMS Would the Project:	Potentially Significant Impact	Less than Significant With Mitigation Incorporated	Less than Significant Impact	No Impact
a) Require or result in the relocation or construction of new or expanded water, wastewater treatment or stormwater drainage, electric power, natural gas, or telecommunication facilities, the construction of which could cause significant environmental effects?	☐	☐	☐	☒
b) Have sufficient water supplies available to serve the Project and reasonably foreseeable future development during normal, dry, and multiple dry years?	☐	☐	☐	☒
c) Result in a determination by the wastewater treatment provider which serves or may serve the Project that it has adequate capacity to serve the Project's projected demand in addition to the provider's existing commitments?	☐	☐	☐	☒
d) Generate solid waste in excess of State or local standards, or in excess of the capacity of local infrastructure, or otherwise impair the attainment of solid waste reduction goals?	☐	☐	☒	☐
e) Comply with federal, state, and local management and reduction statutes and regulations related to solid waste?	☐	☐	☐	☒

Significance criteria established by CEQA Guidelines, Appendix G.

Discussion. Would the Project:

a. Require or result in the relocation or construction of new or expanded water, wastewater treatment or stormwater drainage, electric power, natural gas, or telecommunication facilities, the construction of which could cause significant environmental effects?

No Impact. No, the proposed Project would not require or result in the relocation or construction of new or expanded water, wastewater treatment, stormwater drainage, electric power, natural gas, or telecommunication facilities. The proposed Project involves rehabilitation of several components of the existing Garvey Reservoir, including cover replacement, modifications to the Administration Building and Water Quality Laboratory, and upgrades to the facility electrical system and standby generator. The Project does not include construction of new water supply facilities or expansion of the reservoir, and no increase in wastewater generation at the site would occur. In addition, the Project would not require natural gas connections or telecommunications infrastructure. Therefore, the Project would not require or result in the relocation or construction of new or expanded utility facilities. No impact would occur, and further analysis in the Draft EIR is not warranted.

b. Have sufficient water supplies available to serve the Project and reasonably foreseeable future development during normal, dry, and multiple dry years?

No Impact. Yes, there would be sufficient water supplies available to serve the proposed Project. The operations and maintenance activities at Garvey Reservoir would be similar to existing conditions once construction activities are completed and would not require additional water supplies. Therefore, no impact to water supplies would occur, and further analysis in the Draft EIR is not warranted.

c. *Result in a determination by the wastewater treatment provider which serves or may serve the Project that it has adequate capacity to serve the Project's projected demand in addition to the provider's existing commitments?*

No Impact. Yes, the proposed Project would result in a determination by the wastewater treatment provider which serves or may serve the Project that it has adequate capacity to serve the Project's projected demand in addition to the provider's existing commitments. The Project would not increase wastewater generation at the site. As a result, no impact to wastewater treatment capacity would occur, and further analysis in the Draft EIR is not warranted.

d. *Generate solid waste in excess of State or local standards, or in excess of the capacity of local infrastructure, or otherwise impair the attainment of solid waste reduction goals?*

Less than Significant Impact. No, the proposed Project would not generate solid waste in excess of State or local standards, or in excess of the capacity of local infrastructure, or otherwise impair the attainment of solid waste reduction goals. Construction activities would temporarily generate solid waste, including soil spoils, demolition debris, and other construction waste that would be disposed of at the Scholl Canyon Landfill approximately 7.4 miles northwest of the Project site or at another nearby landfill. The Scholl Canyon Landfill has a maximum permitted throughput of 3,400 tons per day with an average throughput of 1,254 tons per day; therefore, its excess throughput capacity is approximately 2,146 tons per day. In addition, as of 2017, the Scholl Canyon Landfill had approximately 7.7 million cubic yards remaining of its total capacity of 58.9 million cubic yards and is expected to continue operations through 2030 (California Department of Resources Recycling and Recovery 2021; County of Los Angeles 2017). Furthermore, according to the County of Los Angeles Countywide Integrated Waste Management Plan 2017 Annual Report (2019), a shortfall in permitted landfill capacity within Los Angeles County is not anticipated to occur in the next 15 years. Given that waste would only be temporarily generated by the Project during the construction period and with the existing availability of landfill capacity at the Scholl Canyon Landfill and other nearby landfills, the Project would have low potential to generate solid waste in excess of State or local standards, or in excess of the capacity of local infrastructure, or otherwise impair the attainment of solid waste reduction goals. Furthermore, operations and maintenance activities at Garvey Reservoir would be similar to existing conditions once construction activities are completed and would not result in increased solid waste generation at the Project site. Impacts would be less than significant, and further analysis in the Draft EIR is not warranted.

e. *Comply with federal, state, and local management and reduction statutes and regulations related to solid waste?*

No Impact. Yes, the proposed Project would comply with federal, state, and local management and reduction statutes and regulations related to solid waste. Project construction activities would temporarily generate solid waste, including soil spoils, demolition debris, and other construction waste. Project Contractor(s) would be required to comply with federal, state, and local statutes and regulations related to solid waste. Therefore, no impact would occur, and further analysis in the Draft EIR is not warranted.

3.20 Wildfire

Wildfire If located in or near state responsibility areas or lands classified as very high fire hazard severity zones, would the Project:	Potentially Significant Impact	Less than Significant With Mitigation Incorporated	Less than Significant Impact	No Impact
a) Substantially impair an adopted emergency response plan or emergency evacuation plan?	☐	☐	☐	☒
b) Due to slope, prevailing winds, and other factors, exacerbate wildfire risks, and thereby expose Project occupants to, pollutant concentrations from a wildfire or the uncontrolled spread of a wildfire?	☐	☐	☐	☒
c) Require the installation or maintenance of associated infrastructure (such as roads, fuel breaks, emergency water sources, power lines or other utilities) that may exacerbate fire risk or that may result in temporary or ongoing impacts to the environment?	☐	☐	☐	☒
d) Expose people or structures to significant risks, including downslope or downstream flooding or landslides, as a result of runoff, post-fire slope instability, or drainage changes?	☐	☐	☐	☒

Discussion. If located in or near State Responsibility Areas or lands classified as Very High Fire Hazard Severity Zones, would the Project:

a. Substantially impair an adopted emergency response plan or emergency evacuation plan?

b. Due to slope, prevailing winds, and other factors, exacerbate wildfire risks, and thereby expose Project occupants to, pollutant concentrations from a wildfire or the uncontrolled spread of a wildfire?

c. Require the installation or maintenance of associated infrastructure (such as roads, fuel breaks, emergency water sources, power lines or other utilities) that may exacerbate fire risk or that may result in temporary or ongoing impacts to the environment?

d. Expose people or structures to significant risks, including downslope or downstream flooding or landslides, as a result of runoff, post-fire slope instability, or drainage changes?

No Impact. No, the proposed Project is not located in or near a State Responsibility Area or lands classified as a Very High Fire Hazard Severity Zone (California Department of Forestry and Fire Protection 2021). Therefore, no impacts related to wildfire in or near State Responsibility Areas or lands classified as a Very High Fire Hazard Severity Zone would occur.

3.21 Mandatory Findings of Significance

MANDATORY FINDINGS OF SIGNIFICANCE Would the Project:	Potentially Significant Impact	Less than Significant With Mitigation Incorporated	Less than Significant Impact	No Impact
a) Does the Project have the potential to substantially degrade the quality of the environment, substantially reduce the habitat of a fish or wildlife species, cause a fish or wildlife population to drop below self-sustaining levels, threaten to eliminate a plant or animal community, substantially reduce the number or restrict the range of a rare or endangered plant or animal, or eliminate important examples of the major periods of California history or prehistory?	☐	☐	☐	☒
b) Does the Project have impacts that are individually limited, but cumulatively considerable? (*Cumulatively considerable* means that the incremental effects of a Project are considerable when viewed in connection with the effects of past projects, the effects of other current projects, and the effects of probable future projects.)	☒	☐	☐	☐
c) Does the Project have environmental effects that would cause substantial adverse effects on human beings, either directly or indirectly?	☒	☐	☐	☐

Significance criteria established by CEQA Guidelines, Appendix G.

Discussion:

a. *Does the Project have the potential to substantially degrade the quality of the environment, substantially reduce the habitat of a fish or wildlife species, cause a fish or wildlife population to drop below self-sustaining levels, threaten to eliminate a plant or animal community, substantially reduce the number or restrict the range of a rare or endangered plant or animal, or eliminate important examples of the major periods of California history or prehistory?*

No Impact. No, the proposed Project would not have the potential to substantially degrade the quality of the environment, substantially reduce the habitat of a fish or wildlife species, cause a fish or wildlife population to drop below self-sustaining levels, threaten to eliminate a plant or animal community, substantially reduce the number or restrict the range of a rare or endangered plant or animal, or eliminate important examples of the major periods of California history or prehistory.

Based on the analysis provided in Section 3.4 (Biological Resources), the Project would not result in impacts to threatened, endangered, candidate, or special-status species. Therefore, the proposed Project would not have the potential to substantially reduce the habitat of fish and wildlife species, cause a fish or wildlife population to drop below self-sustaining levels, eliminate a plant or animal community, or reduce the number or restrict the range of a rare or endangered plant or animal. Furthermore, based on the analysis provided in Section 3.5 (Cultural Resources), no important examples of the major periods of California history or prehistory are present on the Project site. Therefore, no impact would occur, and further analysis in the Draft EIR is not warranted.

b. Does the Project have impacts that are individually limited, but cumulatively considerable? (Cumulatively considerable means that the incremental effects of a Project are considerable when viewed in connection with the effects of past projects, the effects of other current projects, and the effects of probable future projects.)

Potentially Significant Impact. Yes, the proposed Project may have impacts that are individually limited but cumulatively considerable. Potentially significant impacts associated with the proposed Project as they relate to air quality, noise, and transportation, in combination with the effects of other past, current, and future projects in the vicinity of the Project site, may have a cumulatively considerable effect. The impacts of the proposed Project in combination with existing and currently planned and pending developments as they relate to air quality, GHG emissions, noise, and transportation may be cumulatively considerable, and technical studies shall be prepared to further analyze these topics. The Project's impacts related to these topics will be detailed further in the Draft EIR, and feasible mitigation measures, as required, will be proposed.

c. Does the Project have environmental effects that would cause substantial adverse effects on human beings, either directly or indirectly?

Potentially Significant Impact. Based on the analysis contained in this Initial Study, the proposed Project may result in substantial adverse effects on human beings related to issues such as air quality, greenhouse gas emissions, noise, transportation, and tribal cultural resources. The Project's potential adverse effects on human beings as they relate to these areas may be potentially significant, and technical studies shall be prepared to further analyze these topics. The Project's impacts related to these topics will be detailed further in the Draft EIR, and feasible mitigation measures, as required, will be proposed.

4. List of Acronyms

ADA	Americans with Disabilities Act
APEFZ	Alquist-Priolo Earthquake Fault Zone
BMP	Best Management Practice
CAGN	coastal California gnatcatcher
CalOSHA	California Occupational Safety and Health Administration
Caltrans	California Department of Transportation
CAP	Climate Action Plan
CDFW	California Department of Fish and Wildlife
CEC	California Energy Commission
CEQA	California Environmental Quality Act
CESA	California Endangered Species Act
CHRIS	California Historical Resources Information System
CNDDB	California Natural Diversity Data Base
CNPS	California Native Plant Society
CO_2	carbon dioxide
CO_2e	carbon dioxide equivalents
CRHR	California Register of Historical Resources
CWA	Clean Water Act
DDW	Division of Drinking Water
DOC	California Department of Conservation
EIR	Environmental Impact Report
ESA	Federal Endangered Species Act
FTA	Federal Transit Administration
GHG	greenhouse gas
HVAC	heating, ventilation, and air conditioning equipment
I/O	inlet/outlet
I-10	Interstate 10
in/sec	inches per second
IPCC	Intergovernmental Panel on Climate Change
lbs	pounds
Metropolitan	The Metropolitan Water District of Southern California
MPMC	Monterey Park Municipal Code
NAHC	Native American Heritage Commission
NPDES	National Pollutant Discharge Elimination System
O-S	Open Space zoning
PRC	California Public Resources Code

RPW	relatively permanent waterway
RWQCB	Regional Water Quality Control Board
SB	Senate Bill
SCAQMD	South Coast Air Quality Management District
SCCIC	South Central Coastal Information Center
SLF	Sacred Lands File
SR-60	State Route 60
SWPPP	Stormwater Pollution Prevention Plan
SWRCB	State Water Resources Control Board
USACE	U.S. Army Corps of Engineers
USDA	United States Department of Agriculture
USEPA	United States Environmental Protection Agency
USFWS	U.S. Fish and Wildlife Service

5. References

Atwood, J.L. and D.R. Bontrager. 2001. "California gnatcatcher (*Polioptila californica californica*), version 2.0." In *The Birds of North America*. A.F. Poole and F.B. Bill, eds. Cornell Lab of Ornithology, Ithaca, New York. https://doi.org/10.2173/bna.574.

California Department of Conservation (DOC). 2015. Fault Activity Map of California. https://maps.conservation.ca.gov/cgs/fam/ (accessed February 2023).

_____. 2016. California Important Farmland Finder. https://maps.conservation.ca.gov/DLRP/CIFF/ (accessed February 2023).

_____. 2018. *The Williamson Act Status Report 2016-17*. https://www.conservation.ca.gov/dlrp/wa/Documents/stats_reports/2018%20WA%20Status%20Report.pdf (accessed February 2023).

_____. 2019. Earthquake Zones of Required Investigation. https://maps.conservation.ca.gov/cgs/EQZApp/app/ (accessed February 2023).

California Department of Fish and Wildlife (CDFW). 2021a. Biogeographic Information and Observation System (BIOS) (V 5.54.29). http://bios.dfg.ca.gov (accessed September 2021).

_____. 2021b. California Natural Diversity Database (CNDDB), Rarefind 5 (online). Commercial Version (accessed September 2021).

California Department of Forestry and Fire Protection. 2021. "FHSZ Viewer." https://egis.fire.ca.gov/FHSZ/ (accessed February 2023).

California Department of Resources Recycling and Recovery. 2021. "SWIS Facility/Site Activity Details – Scholl Canyon Landfill (19-AA-0012). https://www2.calrecycle.ca.gov/SolidWaste/SiteActivity/Details/3531?siteID=1000 (accessed February 2023).

California Department of Toxic Substances Control. 2021. "EnviroStor." https://www.envirostor.dtsc.ca.gov/public/ (accessed February 2023).

California Department of Transportation (Caltrans). 2021. "Scenic Highways – California State Scenic Highways." https://dot.ca.gov/programs/design/lap-landscape-architecture-and-community-livability/lap-liv-i-scenic-highways (accessed February 2023).

California Governor's Office of Emergency Services. 2015. MyHazards Mapping Tool. https://myhazards.caloes.ca.gov/ (accessed February 2023).

California Native Plant Society (CNPS), Rare Plant Program. 2021. Inventory of Rare and Endangered Plants of California (online edition, v8-03 0.39). http://www.rareplants.cnps.org (accessed September 2021).

California State Water Resources Control Board. 2019. State Wetland Definition and Procedures for Discharges of Dredges or Fill Material to Waters of the State. Sacramento, CA. https://www.waterboards.ca.gov/water_issues/programs/cwa401/docs/2021/procedures.pdf (accessed February 2023).

_____. 2021. "GeoTracker." https://geotracker.waterboards.ca.gov/ (accessed February 2023).

Federal Emergency Management Administration. 2008. FEMA Flood Map 06037C1665F. September 26, 2008. https://msc.fema.gov/portal/home (accessed February 2023).

Lichvar, R.W. et al. 2016. The National Wetland Plant List: 2016 wetland ratings. Phytoneuron 2016-30: 1–17. Published April 28, 2016. https://www.fws.gov/wetlands/documents/National-Wetland-Plant-List-2016-Wetland-Ratings.pdf (accessed February 2023).

Los Angeles, County of. 2012. Los Angeles County Operational Area Emergency Response Plan. June 2012. https://ceo.lacounty.gov/wp-content/uploads/2019/12/OAERP-Approved-Adopted-Version-6-19-2012.pdf (accessed November 2023).

_____. 2019. Los Angeles County Countywide Integrated Waste Management Plan – 2017 Annual Report. https://pw.lacounty.gov/epd/swims/ShowDoc.aspx?id=11230&hp=yes&type=PDF (accessed February 2023).

_____. 2021. "Los Angeles County Airport Land Use Commission (ALUC)." https://planning.lacounty.gov/aluc/airports (accessed February 2023).

Metropolitan Water District of Southern California, The (Metropolitan). 2019. Garvey Reservoir: Reservoir Cover, Liner, and Facilities Rehabilitation Study.

_____. 2021. Master Specifications (Construction Contract).

_____. 2022. Climate Action Plan. https://www.mwdh2o.com/media/12469/final-cap.pdf (accessed February 2023).

Monterey Park, City of. 2001. Monterey Park General Plan – Safety Element. https://www.montereypark.ca.gov/DocumentCenter/View/12670/Final-Safety-and-Community-Services-Element- (accessed February 2023).

_____. 2012. *City of Monterey Park Climate Action Plan*. January 2012. https://www.montereypark.ca.gov/DocumentCenter/View/581/Climate-Action-Plan?bidId= (accessed February 2023).

_____. 2019. City of Monterey Park General Plan Update Draft Environmental Impact Report. https://www.montereypark.ca.gov/DocumentCenter/View/9615/Monterey-Park-GPU-DEIR-w-Appendices (accessed February 2023).

_____. 2020. "Monterey Park 2040 - Land Use and Urban Design Element." Adopted June 17, 2020. https://www.montereypark.ca.gov/DocumentCenter/View/10916/MontereyParkLUUDElement_Adopted_June-2020 (accessed February 2023).

_____. 2021a. "City of Monterey Park Zoning Map." https://www.montereypark.ca.gov/DocumentCenter/View/11735/Zoning-Map_030521 (accessed February 2023).

_____. 2021b. Geological & Seismic Hazards. https://www.montereypark.ca.gov/470/Geological-Seismic-Hazards (accessed February 2023).

Spencer, W.D., P. Beier, K. Penrod, K. Winters, C. Paulman, H. Rustigian-Romsos, J. Strittholt, M. Parisi, and A. Pettler. 2010. California Essential Habitat Connectivity Project: A Strategy for Conserving a Connected California. Prepared for California Department of Transportation, California Department of Fish and Game, and Federal Highways Administration. https://www.wildlife.ca.gov/conservation/planning/connectivity/CEHC (accessed February 2023).

United States Army Corps of Engineers (USACE). Environmental Laboratory. 1987. Technical Report Y-97-1. In: United States Army Corps of Engineers Wetlands Delineation Manual. United States Army Corps of Engineers Waterways Experiment Station. Vicksburg, MS. https://www.lrh.usace.army.mil/Portals/38/docs/USACE%2087%20Wetland%20Delineation%20Manual.pdf (accessed February 2023).

_____. 2008a. Regional Supplement to the Corps of Engineers Wetland Delineation Manual: Arid West Region (Version 2.0). United States Army Corps of Engineers Research and Development Center. Vicksburg, MS. https://usace.contentdm.oclc.org/utils/getfile/collection/p266001coll1/id/7627 (accessed February 2023).

_____. 2008b. A Field Guide to the Identification of the Ordinary High Water mark (OHWM) in the Arid West Region of the Western United States. Technical Report ERDC/CRREL TR-08-12. U.S. Army Engineer Research and Development Center, Cold Regions Research and Engineering Laboratory. Hanover, NH. https://www.spk.usace.army.mil/Portals/12/documents/regulatory/pdf/Ordinary_High_Watermark_Manual_Aug_2008.pdf (accessed February 2023).

_____. 2021. National Wetland Plant List. Website. https://cwbi-app.sec.usace.army.mil/nwpl_static/v34/home/home.html (accessed December 2021).

United States Department of Agriculture (USDA). 2021a. Web Soil Survey. http://websoilsurvey.sc.egov.usda.gov/App/HomePage.htm (accessed February 2023).

_____. 2021b. Soil Data Access Hydric Soils List. https://www.nrcs.usda.gov/publications/query-by-state.html (accessed February 2023).

United States Environmental Protection Agency (USEPA) and United States Army Corps of Engineers (USACE). 2008. Clean Water Act Jurisdiction Following the U.S. Supreme Court's Decision in Rapanos v. United States & Carabell v. United States. Published 2 December 2008

United States Fish and Wildlife Service. 2021a. Critical Habitat Portal. https://ecos.fws.gov/ecp/report/table/critical-habitat.html (accessed February 2023).

United States Fish and Wildlife Service. 2021b. National Wetlands Inventory. http://www.fws.gov/wetlands/Data/Mapper.html (accessed February 2023).

Appendix A

Metropolitan Standard Practices

SECTION 01065
ENVIRONMENTAL COMPLIANCE REQUIREMENTS

Note to Specifier (NTS): This Master Specification is not a "standard" specification but a baseline template to tailor for specific project needs. Ensure that editing is consistent with other contract documents.

1. ***Revise text or numbers in brackets [ ].***
2. ***If there is text that does not apply to the project, including optional text identified with a ★, delete the text and type "(Not Used)" next to the article heading. Do not delete article section headings.***
3. ***Verify cross-references when adding or deleting any text.***

Consult the Metropolitan discipline technical lead with any questions.

NTS: Ensure all CEQA mitigation measures and/or permit conditions which must be implemented by Contractor are covered in this section.

NTS: When using this section, include the following sections in the project specifications as applicable:
01010, Summary of Work
01060, Safety and Regulatory Requirements
★01070, Storm Water Pollution Prevention Plan (SWPPP)
★01072, Water Pollution Control Plan (WPCP)
★01300, Submittals
★01530, Temporary Fences
★01550, Access, Parking, and Traffic
★01565, Noise Control
★02110, Clearing, Grubbing, and Stripping
★02140, Dewatering

PART 1 GENERAL

1.01 GENERAL

NTS: Fill in all areas as appropriate or identify these areas on the drawings. ERAs/ESAs requirements must be project specific (e.g., Fenced? Flagged? Staked? Subject to EPS review).

A. Metropolitan holds the Contractor and all subcontractors liable for meeting the conditions stated herein and in all of Metropolitan's permits and local, state, and federal environmental regulations, acts, laws, and ordinances.

B. The Contractor shall obtain necessary local, state and federal environmental permits and shall comply with the requirements of all such permits and laws, regulations, acts, codes and ordinances. Metropolitan will provide Contractor with copies of all environmental permits obtained by Metropolitan.

C. The Contractor shall perform all construction activities only within the construction boundaries shown on the drawings.[The construction boundaries shall be fenced as specified in this section[and Section 01530, Temporary Fences], unless otherwise directed by the Engineer.] The Contractor shall submit in writing a request to use any area outside the construction boundaries for any activity for authorization by the Engineer.

D. ★The Contractor and all employees shall attend an Employee Orientation Meeting with the Engineer and Metropolitan's designated environmental monitor. The Employee Orientation Meeting will inform all employees of the potential for encountering cultural resources; the sensitivity of the area in which they will be working; environmental measures and requirements; the prevention of harm, harassment, injury, or death of wildlife; and minimization or avoidance measures for sensitive resources.

E. ★The Contractor shall notify the Engineer two weeks prior to any activity within 500 feet of Environmentally Sensitive Areas (ESAs) or Environmental Restricted Areas (ERAs). The Contractor shall notify the Engineer of all proposed activities within ESAs to ensure compliance with all conditions and mitigation measures. The Engineer will, or the Contractor shall as directed by the Engineer, flag or stake the limits of ESAs/ERAs. The Contractor shall fence the ESAs/ERAs limits, as required by the Engineer.

F. ★Metropolitan is responsible for contracting any environmental monitors, mitigation monitors, qualified biologists, qualified archaeologist, qualified paleontologist, or qualified architectural historians required under this specification.

1.02 SUBMITTALS

A. ★Submittals shall be in accordance with Section 01300, Submittals, and this section.

B. ★Action Submittals

1. ★All environmental or otherwise applicable permits procured by the Contractor.

2. A current copy of each construction vehicle's certified tier specifications and Best Available Control Technology (BACT) documentation.

3. Annual copies of the CARB Certificate of Reported Compliance for the Off-Road Diesel Vehicle and Advanced Clean Fleet Regulations.

4. ★All local air quality management district permits or CARB certifications for equipment and vehicles being used by the Contractor.

5. ★Noise Control Plan: The plan shall address requirements specified in this section[and Section 01565, Noise Control].

6. ★Rideshare Plan: A Rideshare Plan for construction employees shall be developed and implemented. The trip reduction plan shall be applicable during the full term of the contract. The trip reduction plan must include rideshare and transit incentives for construction personnel. The plan shall address requirements specified in this section[and Section 01550, Access, Parking, and Traffic].

1.03 SITE ACTIVITIES

NTS: Review and coordinate with Section 02110 to ensure project specific conditions are included (i.e., stripping depth).

A. ★The Contractor shall clear, grub, and strip construction areas as specified in Section 02110, Clearing, Grubbing, and Stripping.

B. ★Staging, stockpiling, and storage areas for vehicles, equipment, and material shall be located outside of any surface water body, drainage channel, [★or ESAs/ERAs].

C. ★The Contractor shall not enter or drive through any surface water body, drainage channel, [★or ESAs/ERAs], unless noted otherwise.

D. ★No debris, soil, silt, sand, bark, slash, sawdust, asphalt, rubbish, paint, oil, cement or concrete or washings thereof, oil or petroleum products, or other organic or earthen materials from construction activities, including stockpiles, shall be allowed to enter into or placed where it can be washed into any surface water body, drainage channel, [★the Colorado River Aqueduct (CRA),] [★or ESAs/ERAs].

E. ★The Contractor shall implement measures to prevent debris, dust, liquid, and other objects from falling into the water while working over or near water surfaces.

F. ★No excess materials, rubbish, or debris shall be deposited within [choose appropriate project-specific distance] feet of any surface water body or drainage channel [★or ESAs/ERAs].

NTS: Use the following paragraph only for desert locations.

G. ★No excess materials, rubbish, or debris shall be deposited within 300 feet of the CRA.

H. ★No fueling or maintenance shall be done within [choose appropriate project-specific distance] feet of any surface water body or drainage channel [★or ESAs/ ERAs] or where petroleum products or other pollutants may enter these areas under any flow.

NTS: Use the following paragraph only for desert locations.

I. ★No fueling or maintenance shall be done within 500 feet of natural drainage swales or the CRA or where petroleum products or other pollutants may enter these areas under any flow.

J. ★Any equipment or vehicle to be driven and/or operated within a surface water body, drainage channel, or drainage swale shall be checked and maintained daily to prevent leaks of materials.

K. Stationary equipment such as motors, pumps, and generators, shall be equipped with drip pans, which are secured to prevent shifting or overturning in the event of high winds.

L. ★The Contractor shall dispose of excess materials, debris, and rubbish in approved off-site locations consistent with the requirements of issued disposal permits and applicable local, state, and federal laws and regulations.

1. The Contractor is responsible for obtaining all environmental permits and submitting them to the Engineer for authorization prior to site preparation or disposal of the materials at the approved off-site location.

2. Permission of property owner does not preclude the Engineer from rejecting a disposal site.

M. The Contractor shall dispose of all hazardous materials in accordance with Section 01060, Safety and Regulatory Requirements.

N. The Contractor shall handle, store, apply, and dispose of chemicals and/or herbicides consistent with all applicable federal, state, and local regulations.

O. The Contractor shall clean up all spills in accordance with all applicable environmental laws and regulations and notify the Engineer immediately in the event of a spill.

P. Unless otherwise shown on the drawings, the Contractor shall return all Contractor yard and laydown areas to the original topographic conditions.

Q. ★The Contractor shall stabilize exposed slopes, streambeds, and streambanks that are located within the construction limits.

R. The Contractor shall not create a nuisance or pollution as defined in the California Water Code. The Contractor shall not cause a violation of any applicable water quality standard for receiving waters adopted by the Regional Water Quality Control Board or the State Water Resources Control Board, as required by the Clean Water Act.

S. ★Dewatering activities (e.g., for nuisance water or groundwater) shall not affect any vegetation outside of the construction limits. Dewatering shall be in accordance with Section 02140, Dewatering.

T. ★The Contractor shall ensure that vehicles and equipment brought on-site shall be decontaminated in accordance with federal and state publications for controlling the spread of noxious weeds, invasive species, and disease, which includes inspecting all vehicles, tools, boots, and other project-related equipment, and removing all visible soil/mud, plant materials, and animal remnants prior to entering and exiting the project site. Rules and guidelines are available at: https://www.fs.fed.us/eng/pubs/pdf/05511203.pdf

1. The Contractor shall complete the Certification of Clean Equipment prior to any vehicles or equipment entering the project site (see Attachment A).

2. The Contractor shall decontaminate all tools, boots, and other equipment prior to entering and exiting the project site and/or between each use at different sites to avoid the introduction and transfer of organisms between locations.

   a. The Contractor shall decontaminate project gear and equipment by thoroughly scrubbing equipment, especially small crevices such as bootlaces, seams, net corners, etc., with a stiff-bristled brush to remove all organisms. Guidelines are available at: https://www.cal-ipc.org/docs/bmps/dd9jwo1ml8vttq9527zjhek99qr/BMPsTransportUtilityCorridors.pdf

3. The Contractor shall power-wash all vehicles and equipment prior to entering the project site.

   a. Power-washing vehicles includes washing all mud and debris on and under the vehicle (powertrain), bumpers, and especially, tires. Guidelines are available at: https://www.cal-ipc.org/docs/bmps/dd9jwo1ml8vttq9527zjhek99qr/BMPLandManager.pdf

b. The Contractor shall repeat the decontamination process and re-certify a vehicle or piece of equipment if it has been removed from the site, used at a different site then later returned to the project site, or as deemed necessary by the Engineer.

NTS: Consult with Safety and Regulatory Services (SRS) for requirements in below article.

1.04 AIR POLLUTION CONTROL

A. ★The Contractor shall not discharge smoke, dust, or other air contaminants into the atmosphere in a quantity that is greater than 20% opacity (Ringlemann 1) for more than 3 minutes in a 1-hour time period as required by [SCAQMD/MDAQMD Rule 401].

B. The Contractor shall use renewable diesel (R99 or R100) for all construction vehicles and equipment as required by CARB where feasible. The Contractor must demonstrate that renewable diesel is not available through normal fueling mechanisms for the Engineer's authorization to use ultra-low sulfur diesel (ULSD). [Include additional mitigation measures required by CEQA.]

C. ★The Contractor shall use low emission mobile construction equipment during site preparation, grading, excavation, and construction of the project.

D. The Contractor shall not idle the vehicle primary diesel engine for greater than 5 minutes at any location, except as allowed by CARB regulation: Title 13 CCR, Division 3, Chapter 10, Section 2485.

E. Construction equipment shall be maintained, and properly tuned and operated in a manner to reduce peak emission levels.

F. Dust Control

1. The Contractor shall provide effective measures to prevent operations from producing dust in amounts damaging to personnel, property, Metropolitan plant operations, plants, or animals, and to prevent causing a nuisance to persons living or occupying buildings in the vicinity.

2. Construction methods shall include dust reduction activities, including the use of water trucks in construction areas dust suppressants, and track-out control devices (e.g., gravel and tire cleaning grids).

3. The Contractor shall spray water as often as required to minimize dust and particulates or apply a dust inhibiting surface treatment to avoid production of dust as determined by the Engineer in areas used as construction roads or other purposes in connection with the work.

   a. The Contractor shall continuously maintain this surface condition during the entire construction period.

   b. The Contractor's construction facilities shall be operated in a manner ensuring minimum dust production.

   c. The Contractor shall water or mist soil as it is being excavated and stockpiled or loaded onto transportation trucks.

4. Paved streets shall be swept if silt is carried onto these roads from construction activities. Track-out shall not extend greater than 25 feet cumulatively in any direction.

5. The Contractor shall cover or moisten with water trucks transporting soil or debris to suppress the dispersion of dust.

6. The Contractor shall cover all trucks transporting earthen material or maintain at least 2 feet of freeboard.

G. The Contractor shall use existing onsite power sources (e.g., power poles) rather than portable generators when feasible; or clean fuel generators shall be used rather than temporary generators powered by fossil-fuel when feasible. If a portable generator is powered by an engine rated over 50 bhp, it shall be CARB registered or permitted by the local air district.

H. The Contractor shall use 2010 model year engines or 2010 model year equivalent emissions engines on diesel haul trucks, where available. At a minimum, the Contractor shall use engines that adhere to the CARB Truck and Bus Regulation: Title 13 CCR, Division 3, Chapter 1, Article 4.5, Section 2025.

NTS: Use following paragraph if mitigation measures are required under CEQA.

I. ★All off-road diesel-fueled construction vehicles greater than 25 horsepower (hp) shall be compliant with federally mandated clean diesel engines emissions (US Environmental Protection Agency Tier 4), where available. [Include additional mitigation measures required by CEQA.]

J. All off-road diesel-fueled construction vehicles shall be in accordance with CARB's In-use Off-road Diesel-fueled Fleet Regulation: Title 13 CCR, Division 3, Chapter 9, Article 4.8.

1. The Contractor shall submit a current copy of each construction vehicle's certified tier specifications, BACT documentation, or the CARB Certificate of Reported Compliance Off-Road Diesel Vehicle Regulation and be labeled with the CARB issued Equipment Identification number (EIN).

K. All portable engines greater than 50 hp and equipment shall be compliant with CARB's Portable Equipment Registration Program (PERP) Regulation: Title 13 CCR, Division 3, Chapter 9, Article 5; the Portable Engine Air Toxics Control Measures of Title 17 CCR, Division 3, Chapter 1, Subchapter 7.5, Section 93116; and local air district rules.

1. All applicable equipment must have valid CARB registrations or local air quality management district permits.

L. ★The Contractor shall notify the local air district in accordance with the CARB PERP Regulations specified timeframes for any construction projects that have fleets of PERP engines that exceed 2,500 combined hp or greater and if units are scheduled to be onsite for more than 5 days.

1. The Contractor shall ensure that project Particulate Matter (PM) emissions shall not exceed more than 82 pounds per day as required by CARB regulations: CCR Title 13, Division 3, Chapter 9, Article 5, Sections 2455-2459.

M. ★For sites contaminated with Volatile Organic Compounds (VOCs) and/or toxic air contaminants, the Contractor shall follow all requirements of SCAQMD Rule 1166 for VOC Emissions from Decontamination of Soil and/or Rule 1466 for Control of Particulate Emissions from Soils with Toxic Air Contaminants, including but not limited, to providing authorized mitigation plans and conducting dust monitoring, and required notifications.

N. ★Traffic speeds on all unpaved roads shall be [20] mph or less as posted.

NTS: Delete Rule 403.1, if not within the Coachella Valley Blowsand Zone.

O. The Contractor shall comply with [SCAQMD and/or MDAQMD] Rules 401 (Visible Emissions), 402 (Nuisance), and 403 (Fugitive Dust)[, and SCAQMD Rule 403.1 (Supplemental Fugitive Dust Control Requirements for Coachella Valley Sources)]. Copies of the Rules shall be kept at the site. Special attention shall be directed toward the following:

NTS: Delete if within MDAQMD.

1. ★The Contractor shall not discharge from any source air contaminants (e.g., smoke or dust) which exceed the legal limits endanger, or cause injury, detriment, nuisance, or annoyance to any considerable number of persons or to the public.

NTS: Delete if within MDAQMD. Delete Rule 403.1, if not within the Coachella Valley Blowsand Zone.

2. ★The Contractor shall implement the Best Available Control Measures (BACM) listed in Table 1 of SCAQMD Rule 403[and Rule 403.1].

3. ★The Contractor shall comply with the Large Operation requirements (50 or more acres of disturbed surface area or earth moving operations of 5,000 cubic yards/day for more than 3 days) which include but are not limited to notification to SCAQMD and use of BACM listed in Table 2 of SCAQMD Rule 403.

NTS: Delete if within MDAQMD. Delete Rule 403.1, if not within the Coachella Valley Blowsand Zone.

4. ★When wind speeds, including instantaneous gusts, exceed 25 miles per hour, the Contractor shall implement and record Contingency Control Measures listed in Table 3 of SCAQMD Rule 403[and Rule 403.1].

P. ★For sites conducting abrasive blasting, only CARB certified abrasives shall be used. The abrasive blasting equipment shall possess a local air district permit or CARB registration. Blasting of any materials that may contain toxics shall be confined and be used in conjunction with a permitted negative air machine. The Contractor shall comply with the following opacity/Ringlemann limits based off activity:

1. Confined blasting--20% opacity/Ringlemann 1

2. Unconfined blasting--40% opacity/Ringlemann 2

NTS: Delete if within MDAQMD.

Q. ★Any temporary batch plant located on site shall have the appropriate local air district operating permit. The operator of the plant shall use dust suppressants or other dust control measures at each source during loading, unloading, or transferring activities to limit fugitive dust emissions. These control measures shall apply to conveyors, crushing equipment, screening equipment, and storage piles. The operator shall comply with all requirements of SCAQMD Rule 1157.

NTS: Delete if within MDAQMD.

R. ★The Contractor shall use only approved asbestos removal procedures as identified in SCAQMD Rule 1403, including but not limited to, notification of the intent to conduct any demolition or renovation no later than 10 days prior to the activity.

NTS: Delete if within SCAQMD.

S. ★ The Contractor shall complete the MDAQMD Asbestos Checklist (available at: ca.gov) and, as applicable, submit a Notification of Demolition/Renovation to MDAQMD 10 working days prior to the start of any demolition or renovation work. The Contractor shall adhere to all work practices as specified in the Asbestos National Emission Standards for Hazardous Air Pollutants (NESHAP), CFR Title 40 Part 61, Subpart M.

NTS: Use Article 1.05 for non-desert locations.

1.05 BIOLOGICAL RESOURCES

A. As part of the project, the following procedures shall be implemented to avoid adverse impacts to sensitive biological resources, especially the [identify sensitive species (e.g., coastal California gnatcatcher)].

1. ★Prior to commencing construction or mobilization activities, a Metropolitan biologist will conduct a survey(s) to ensure avoidance of any sensitive resources during construction activities. Following the survey(s), Metropolitan may provide sensitive resource avoidance recommendations as appropriate.A Metropolitan biologist may be present onsite throughout the duration of the work at the discretion of Metropolitan to monitor all construction activities.

   a. ★The biologist will oversee compliance with protective stipulations for [list sensitive species], as necessary.

   b. The biologist shall be present when the Contractor establishes the construction limits as shown on the drawings and/or installs temporary fencing or other site boundary markers. All temporary fencing or other markers shall be clearly visible to construction personnel.

   c. Prior to any construction or grading activities, the biologist will provide education to all project personnel regarding the prevention of harm, harassment, injury, or death of wildlife and minimization or avoidance of sensitive resources. The instruction shall be given as often as necessary to ensure that all personnel working on site are adequately briefed in the matter.

   d. The biologist will be empowered to temporarily halt construction activities and make recommendations to ensure impact minimization, compliance with the relevant provisions of all environmental permits and regulations, and that work does not take place in habitat areas outside the clearing limits.

   e. ★No construction access, parking, or storage of equipment or materials is permitted within ESAs/ERAs, unless authorized by the Engineer.

   f. The Contractor shall cover all open trenches when not in use at the end of each workday.

B. ★As part of the project, the following procedures shall be implemented to avoid adverse impacts to trees located within the project work limits:

1. ★The Contractor shall avoid stockpiling of materials and driving or parking vehicles and equipment under the canopy of existing trees to protect tree root systems and avoid damage to the trees, where trees and work limits are not on concrete or asphalt.

2. No trees within project work limits shall be removed, cut, or trimmed unless identified on the drawings, or authorized in advance by Metropolitan.

   a. Per applicable local tree ordinances, required permits shall be obtained prior to any tree removal, cutting, or trimming.

3. Trees designated for removal shall be removed in accordance with the Migratory Bird Treaty Act and California Fish and Game Code §3503.

NTS: Use Article 1.06 for desert locations.

1.06 ★BIOLOGICAL RESOURCES (DESERT LOCATIONS)

A. As part of the project, the following standard operating procedures will be implemented to avoid adverse impacts to sensitive biological resources, especially the desert tortoise [and other sensitive species, as necessary].

1. ★Prior to commencing construction or mobilization activities, a Metropolitan biologist will conduct a survey(s) to ensure avoidance of any sensitive resources during construction activities. Following the survey(s), Metropolitan may provide sensitive resource avoidance recommendations as appropriate.

2. A Metropolitan biologist may be present onsite throughout the duration of the work at the discretion of Metropolitan to monitor all construction activities.

a. The biologist will oversee compliance with protective stipulations for the desert tortoise [and other sensitive species, as necessary].

NTS: If other sensitive species are identified in addition to the desert tortoise, include any additional protective stipulations below, as necessary.

b. Prior to commencing construction or mobilization activities, the biologist will survey for desert tortoise burrows or other desert tortoise sign at all work sites, including laydown and storage areas, and site access routes. Surveys shall be conducted according to the U.S. Fish and Wildlife Service document "Preparing for Any Action that May Occur Within the Range of the Mojave Desert Tortoise. Any desert tortoise burrows located during these surveys will be flagged and/or fenced to ensure avoidance during construction activities as specified in this section[and Section 01530, Temporary Fences].

c. All Contractor's, subcontractors,' and suppliers' personnel who work onsite during construction shall participate in a desert tortoise awareness training program given by Metropolitan prior to being allowed to work on the site, which covers the following topics:

(1) Distribution, occurrence and habitat requirements of the desert tortoise in the southwestern United States,

(2) General behavior and ecology of the tortoise,

(3) Sensitivity to human activities,

(4) Legal protection,

(5) Penalties for violations of state or federal laws,

(6) Reporting requirements, and

(7) Project protective measures.

d. The biologist shall be present when the Contractor establishes the construction limits shown on the drawings and any necessary access routes, and installs temporary fencing or other site boundary markers. All temporary fencing or other markers shall be clearly visible to construction personnel. Special habitat features, such as burrows, identified by the biologist shall be avoided.

e. Access to the project sites shall be restricted to existing routes of travel as shown on the drawings, or as designated by the Engineer in the field. Driving off-road is prohibited at all times.

f. Prior to commencing any dewatering operations, the biologist will survey the discharge water flow path to ensure that no desert tortoises are at risk from the discharge.

g. All workers shall inspect for tortoises under vehicles or stationary equipment prior to moving them. If a desert tortoise is present, the worker shall carefully move the vehicle or equipment only when the desert tortoise would not be injured or shall wait for the desert tortoise to move away on its own.

h. The Contractor shall cover all open trenches when not in use at the end of each workday.

i. Dogs or any other pets or animals shall not be allowed in any work area.

j. All trash and food items shall be promptly contained within closed, raven-proof containers and regularly removed from the site to reduce the attractiveness of the area to wildlife, especially ravens, and other tortoise predators.

k. The biologist will be empowered to temporarily halt construction activities and make recommendations to ensure impact minimization, compliance with the relevant provisions of all environmental permits, and that work does not take place in habitat areas outside the clearing limits.

NTS: Use the following if there are ESAs/ERAs.

l. ★The Contractor shall not allow access, parking, or storage of equipment or materials within ESAs and ERAs unless authorized by the Engineer.

B. Traffic speed limit shall be [20] miles per hour on all unpaved roads. The purpose of this speed limit is to enable drivers sufficient time to identify and to avoid striking and killing desert tortoises. Metropolitan will issue the Contractor a warning for the first violation of the speed limit by any of his/her employees, subcontractors, and/or suppliers. Subsequently, Metropolitan reserves the rights to expel from the project repeat speeding offenders, or a first-time offender depending on the severity of the violation as determined by Metropolitan.

C. ★As part of the project, the following procedures shall be implemented to avoid adverse impacts to trees located within the project work limits:

1. ★The Contractor shall avoid stockpiling of materials and driving or parking vehicles and equipment under the canopy of existing trees to protect tree root systems and avoid damage to the trees, where trees and work limits are not on concrete or asphalt.

2. No trees within project work limits shall be removed, cut, or trimmed unless identified for removal on project drawings, or authorized in advance by Metropolitan.

a. Per applicable local tree ordinances, required permits shall be obtained prior to any tree removal, cutting, or trimming.

3. Trees designated for removal shall be removed in accordance with the Migratory Bird Treaty Act and California Fish and Game Code §3503.

1.07 ★MIGRATORY BIRD TREATY ACT AND CALIFORNIA FISH AND GAME CODE §3503

A. No physical disturbance of vegetation, operational structures (e.g., inlet/outlet towers, overhangs, etc.), buildings, or other potential habitat (e.g., open ground, gravel, construction equipment or vehicles, etc.) that may support nesting birds protected by the Migratory Bird Treaty Act and California Fish and Game Code §3503 shall occur in the breeding season, unless authorized by the Engineer.

NTS: Use the following paragraph only for desert locations. Change breeding period based on project location, local and annual climatic conditions, and in consultation with a qualified biologist, as needed.

1. ★The breeding season in the desert typically extends from January 15 through July 15 but can vary based on local and annual climatic conditions.

NTS: Change breeding period based on project location, local and annual climatic conditions, and in consultation with a qualified biologist, as needed.

2. The breeding season extends from [specify date] to [specify date].

3. If nesting habitat must be cleared or project activities must occur in the vicinity of nesting habitat within the breeding season as defined above, a qualified biologist will perform a nesting bird survey no more than [insert number of days; typically between 3-5 days] days prior to clearing or removal of nesting habitat or start of project activities.

4. If active nests for sensitive species, raptors, and/or migratory birds are observed, an adequate buffer zone or other avoidance and minimization measures may be established until the young have fledged and are no longer reliant on the nest, as identified by a qualified biologist and authorized by the Engineer. If a buffer is necessary it will be clearly marked in the field by the Contractor, as directed by the Engineer, and construction or clearing will not be conducted within this zone.

5. A qualified biologist will monitor active nests or nesting bird habitat within or immediately adjacent to project construction areas and the Engineer will provide necessary recommendations to the Contractor to minimize or avoid impacts to protected nesting birds.
6. If implementation of avoidance and minimization measures is not feasible, the qualified biologist responsible for monitoring will be empowered to temporarily halt construction activities, until the young have fledged and are no longer reliant on the nest or biological monitoring indicates that construction can proceed with no impacts to the nest and/or young.

NTS: The following article is not necessary if there is no ground-disturbance.

1.08 ★CULTURAL AND PALEONTOLOGICAL RESOURCES

A. Cultural and paleontological resources may include, but are not limited to: prehistoric artifacts, grave goods, funerary objects, human remains, historic can scatters, building foundations, historic buildings, structures, objects, and fossils.

B. ★Archaeological and/or paleontological surveys of the project area have been conducted; however, discoveries of previously unknown archaeological and paleontological resources or buried deposits may be possible during construction.

C. ★The Contractor shall not infringe upon any areas identified as a cultural or paleontological area, whether they have been identified as an ESA/ERA or not. Any person identified trespassing upon restricted areas shall be immediately removed from the project.

D. If archaeological or paleontological resources are encountered at the project site, the Contractor shall not disturb the resources and shall immediately:

1. Cease all work within 50 feet of the discovery
2. Notify the Engineer
3. Protect the discovery area, as directed by the Engineer
4. The Engineer, with the qualified architectural historian, archaeologist and/or paleontologist, will make a decision of validity of the discovery and designate an area surrounding the discovery as a restricted area. The Contractor shall not enter or work in the restricted area until the Engineer provides written authorization.

E. ★Ground-disturbing activities will be monitored by a qualified archaeologist or paleontologist.

1. The Engineer and monitor will conduct a review of the location for the boundaries of the archaeological/paleontological monitoring area.
2. Temporary fencing or other restricting features may be used to define the boundaries of the monitoring area. The Contractor shall not work within the monitoring area boundaries unless the monitor is present.
3. The Contractor shall submit to the Engineer, a schedule of days to be worked, at least five working days prior to work within the monitoring area.
4. If any cultural materials are observed during ground disturbance, the Contractor shall follow the procedures outlined hereinabove.

1.09 ★HUMAN REMAINS

A. In the event that human remains are discovered during excavation/construction activity, Health and Safety Code Section 7050.5, CEQA Guidelines Section 15064.5 (e), and Public Resources Code Section 5097.98 shall apply. The Contractor shall notify the Engineer at once and not enter or work in the restricted area until the Engineer provides written authorization.

1.10 WILDFIRE PROTECTION

A. Gasoline-powered or diesel-powered machinery used during construction shall be equipped with standard exhaust controls and muffling devices that also act as spark arrestors.

1.11 HAZARDOUS MATERIALS

A. Handling of hazardous materials shall be in accordance with Section 01060.

1.12 LIGHT ABATEMENT

A. The Contractor shall exercise special care to direct floodlights to shine downward. Floodlights shall be shielded to avoid a nuisance to the surrounding areas.

B. No lighting shall include a residence or native area in its direct beam.

C. The Contractor shall correct lighting nuisance whenever it occurs.

1.13 ★MONITORING

A. Metropolitan is required to comply with the state and federal environmental regulations, which may require monitoring.

B. ★Metropolitan is required under the California Environmental Quality Act (CEQA) to provide mitigation monitoring in accordance with the [insert CEQA document name], [and to comply with the USFW S/ACOE/CDFW/RWQCB (10(a) *or* Section 7/1602/404/401, etc.) permit(s) issued for this project] [if permit is required]. The Contractor shall comply with the mitigation monitoring plan as specified herein and as directed by the Engineer.

C. Metropolitan's monitors will monitor construction activities to ensure that all conditions are implemented; however, the Contractor is responsible for their implementation. Monitors shall be allowed access to observe all construction.

D. The Contractor shall submit required documentation (e.g., equipment list and maintenance logs, noise monitoring logs, seed labels) demonstrating compliance with applicable regulations.

1.14 ★NATIVE AREAS

A. The Contractor is cautioned that wildlife may traverse the work limits. The Contractor shall conduct his/her operations to facilitate the well-being of all wildlife affected by the project.

B. The Contractor shall not feed or harass wildlife.

C. The Contractor shall keep the work area free of trash and food waste. All food waste and trash shall be removed from the work area daily.

1.15 NOISE CONTROL

A. The Contractor shall comply with all requirements of governmental agencies having jurisdiction.

B. All site preparation, grading, excavation, and construction activities shall be limited to the hours specified in Section 01010, Summary of Work, and shall be in accordance with local jurisdiction's noise ordinances.

1. ★Deliveries in residential areas shall only be conducted between [insert time period (i.e., 7 a.m. and 5 p.m. Monday through Saturday, and between 9 a.m. and 3 p.m. on Sunday)][hours specified in Section 01010].

2. ★Queuing of trucks and/or delivery of construction materials to any part of the construction site will not be allowed in residential areas outside of designated hours.

C. ★The Contractor shall comply with all requirements of the authorized Noise Control Plan, as specified in this section.

D. The Contractor shall perform all work without undue noise and shall make every effort to abate or prevent noise nuisances.

E. Construction vehicle equipment shall be kept in proper working order for the duration of the construction activities.

F. The Contractor shall equip all construction equipment, fixed and mobile, including internal combustion engines, with properly operating and maintained noise mufflers and intake silencers, consistent with the manufacturers' standards.

G. Stationary noise-generating equipment, such as generators and compressors, shall be housed or covered and located as far possible as practicable from the nearest residential/institutional property lines to attenuate noise.

H. If electrical services are available within 150 feet, electrical power shall be used to run air compressors and similar power tools at all construction activity locations, in lieu of gas or diesel-powered compressors.

1.16 SURFACE AND STORM WATER CONTROL

A. Surface and storm water control shall be in accordance with Section [01070, Storm Water Pollution Prevention Plan (SWPPP) / 01072, Water Pollution Control Plan (WPCP)].

1.17 ★TRAFFIC

A. The Contractor shall set up temporary traffic control as specified in the Contractor's authorized traffic control plan, and as specified in Section 01550, Access, Parking, and Traffic. See Submittals article.

B. ★The Contractor shall cover all open trenches when not in use at the end of each workday, where feasible and necessary.

1. In residential areas, plating shall be recessed to reduce noise impacts to residents.

1.18 ★WELL-BEING OF DOMESTIC ANIMALS

A. The Contractor is cautioned that domestic animals (cattle, horses, and others) may traverse the work limits or are kept on surrounding properties. The Contractor shall conduct his/her operations to avoid unnecessary disturbances and facilitate the well-being of all animals affected by the project. The Contractor shall consult with the Engineer and affected animal owners and shall cooperate in using construction methods and establishing operating procedures to avoid unnecessary disturbances to animals.

PART 2 PRODUCTS (NOT USED)

PART 3 EXECUTION (NOT USED)

ATTACHMENT A

CERTIFICATION OF CLEAN EQUIPMENT

Project Name:_____

I certify that the following equipment is clean of soil, seeds, vegetative matter, other debris, or adult, juvenile, or eggs of aquatic invasive animals, and has been decontaminated. Cleaning and decontamination were performed outside of the bed, bank, or channel of a stream and the bed or shore of a lake. Rinse water was properly contained and disposed of according to applicable federal, state, and local laws and ordinances enacted and in force at time.

Equipment Description	License Plate/Identification #		Cleaning Location	Date Cleaned
		IN		
		OUT		
		IN		
		OUT		
		IN		
		OUT		
		IN		
		OUT		
		IN		
		OUT		
		IN		
		OUT		
		IN		
		OUT		
		IN		
		OUT		
		IN		
		OUT		
		IN		
		OUT		
		IN		
		OUT		

_____ _____

Signature of Permittee or Designee Date

Certification is needed any time equipment is moved into the project work area and prior to leaving the project work area for this project.

END OF SECTION

SECTION 01070
STORM WATER POLLUTION PREVENTION PLAN (SWPPP)

Note to Specifier (NTS): This Master Specification is not a "standard" specification but a baseline template to tailor for specific project needs. Ensure that editing is consistent with other contract documents.

1. ***Revise text or numbers in brackets [ ].***
2. ***If there is text that does not apply to the project, including optional text identified with a ★, delete the text and type "(Not Used)" next to the article heading. Do not delete article section headings.***
3. ***Verify cross-references when adding or deleting any text.***

Consult the Metropolitan discipline technical lead with any questions.

NTS: If the project requires a SWPPP, include Section 01070. If a SWPPP is not required, then use Section 01072, Water Pollution Control Plan (WPCP), instead of Section 01070.

NTS: When using this section, include the following sections in the project specifications as applicable:
★00120, Supplementary Instructions to Bidders
01300, Submittals
★02952, Erosion Control – Post Construction BMPs

PART 1 GENERAL

1.01 REFERENCES

NTS: Delete references from Part 1 if they are not cited in the spec section. If new references are cited in the text, add the new references in Part 1.

A. General

1. The publications listed below form a part of this specification to the extent referenced. In the event of a conflict between the text of this specification and the references cited herein, the text of this specification shall take precedence.

2. Where a date is given for reference standards, the edition of that date shall be used. Where no date is given for reference standards, the latest edition available on the date of Notice Inviting Bids shall be used.

B. California State Water Resources Control Board (SWRCB)

1. Storm Water Program

C. California Stormwater Quality Association (CASQA)

2. Construction Best Management Practices (BMP) Online Handbook

1.02 SUBMITTALS

NTS: Coordinate with Document 00120, Supplementary Instructions to Bidders, regarding the timing of the SWPPP submittal. If the project requires an extensive SWPPP (typically for a large project), Document 00120 provides more time for the Contractor to prepare and submit, and for Metropolitan to review the SWPPP.

A. Submittals shall be in accordance with Section 01300, Submittals, and this section.

B. Action Submittals

1. The Contractor shall submit an SWPPP to the Engineer for authorization. ★[The timing for the SWPPP submittal shall be as specified in Document 00120, Supplementary Instructions to Bidders]. The submitted SWPPP shall be fully compliant with the requirements of the SWRCB, Storm Water Program. The SWPPP shall be resubmitted if

determined unacceptable by the Engineer. Two paper copies and one electronic PDF format copy of the SWPPP shall be submitted. The SWPPP shall contain the following:

a. Names and qualifications of the Contractor's SWPPP Manager, Qualified SWPPP Developer (QSD), and Qualified SWPPP Practitioner (QSP).

b. Statement indicating the Contractor's intent to comply with the terms of the Construction General Permit (CGP) for storm water discharges associated with construction activity until the Contractor-prepared SWPPP is authorized by the Engineer.

2. The Contractor shall submit all necessary revisions and amendments to the SWPPP to the Engineer for authorization. Two paper copies and one electronic PDF format copy of SWPPP amendments shall be submitted.

C. Information Submittals

1. All annual compliance certifications, monitoring program reports, inspection logs, and data shall be submitted as electronic PDF format copies to the Engineer as required by terms and conditions of the CGP and SWPPP. The Contractor shall also provide the Engineer access to a maintained paper copy of inspection logs and reports.

1.03 RELATED ACTIVITIES BY METROPOLITAN

A. Metropolitan has provided site maps of the project to assist the Contractor with its preparation of the SWPPP.

B. Upon review and authorization of the Contractor-prepared SWPPP, Metropolitan will file the SWPPP together with the Notice of Intent (NOI) and obtain a Waste Discharge Identification number (WDID) from the SWRCB. It typically takes up to 10 working days for the SWRCB to issue a WDID after filing by Metropolitan.

C. Metropolitan will also file any revisions to the SWPPP that are submitted by the Contractor, and authorized by the Engineer during the course of the contract.

1.04 PERMIT REGISTRATION DOCUMENTS (PRDS)

A. The authorized SWPPP information will be posted electronically by Metropolitan on the State Water Board's Stormwater Multi-Application and Report Tracking System (SMARTS) website. Information submitted by Metropolitan may be viewed on SWRCB website.

1.05 STORM WATER POLLUTION PREVENTION PLAN PREPARATION AND IMPLEMENTATION

NTS: Confirm the risk level classification of the site. If the site has a risk level classification greater than 1, then include Paragraph 1.05A. Modify as necessary if the project has multiple sites.

A. ★Risk Level Classification

1. The site shall be considered to have a Risk Level [2 or 3] classification.

2. Contractor's QSD shall use this risk classification when developing the SWPPP.

B. The Contractor shall not mobilize or perform any work on the project site until the Engineer has authorized the Contractor's SWPPP and obtained a WDID from the SWRCB.

C. During the course of the contract, the Contractor shall revise and update the SWPPP as required by SWRCB and resubmit to the Engineer for authorization.

D. The Contractor shall prepare and implement a site specific SWPPP in accordance with the requirements of the SWRCB (http://www.swrcb.ca.gov/water_issues/programs/stormwater/constpermits.shtml), the CGP, and the Construction BMP Online Handbook developed by CASQA (https://www.casqa.org/programs-initiatives/bmp-handbooks/construction). The SWPPP and all Contractor activities shall be coordinated with other construction activities and SWPPPs at the site.

1. The SWPPP for this project shall conform to the requirements which include:

a. Eliminate/reduce non-storm water discharges to storm systems and other U.S. waters.

b. Develop and implement a site specific SWPPP that specifies BMPs to prevent all construction pollutants from contacting storm water, limit erosion and sediment transport, and keep all products of erosion and pollutants from moving off site.

c. Perform inspections and maintenance of all BMPs (storm water control structures and pollution prevention measures) and comply with the risk level requirements set-forth by the CGP.

d. Comply with post-construction BMPs for post-construction erosion and sediment control prepared by Metropolitan.

2. The SWPPP shall adequately address these requirements and shall contain as required:

a. Site and source descriptions (including the elements and characteristics specific to the site)

b. Descriptions of BMPs for erosion and sediment control

c. BMPs for construction waste handling and disposal

d. Implementation of authorized local plans

e. A sampling plan and/or sampling contingency plan, as required and based on project risk level

f. Non-storm water management

3. Erosion and sediment control shall include the following practices:

a. Prevent runoff from flowing over unprotected slopes.

b. Keep disturbed areas to the minimum necessary for construction.

c. Control sediment transport within the site and prevent sediment transport from the site, using appropriate BMPs, including but not limited to check dams, fiber rolls, sand bags, and siltation fences. Reduce sediment transport off site though construction of appropriately designed desilting and retention ponds.

d. Remove and dispose of all construction-generated siltation collected within or behind BMPs, including retention ponds.

e. Confine soil disturbance activities to the dry season, whenever possible. If construction needs to be scheduled for the wet season, ensure that erosion and sediment transport control measures are implemented prior to disturbance of soil and/or vegetation.

f. Stabilize disturbed areas as quickly as possible but in no case shall the time of stabilization exceed the time limits specified by the Regional Water Quality Control Board and the requirements of the CGP.

g. Maintain existing temporary controls until they are replaced with permanent controls.

h. Maintain and improve existing controls as necessary to comply with the CGP for construction activity.

E. Storm water management and erosion/sediment controls shall be installed in accordance with the authorized SWPPP and the requirements of the CGP. Controls and procedures shall conform to the latest edition of CASQA's Construction BMP Online Handbook (Web-based portal).

F. The Contractor shall amend the SWPPP prior to and during the course of the work as required by field conditions, construction procedures, or the Engineer. Changes shall be properly documented in the SWPPP. Copies of all amendments shall be submitted to the Engineer for authorization.

G. Maintenance and Inspections

1. The Contractor shall make visual inspections of all erosion control and sediment transport devices as necessary to ensure proper operation not less than once per week, and promptly before and after every rainstorm and at least every 24 hours during an extended rainfall event. If such inspection reveals that additional measures are needed to prevent erosion and sediment transport, the Contractor shall promptly maintain, modify, or install additional devices as needed. The Contractor shall use the forms in the SWPPP for all inspections, and all completed forms shall be included in the SWPPP and submitted to the Engineer.

2. The Contractor shall perform routine maintenance, which shall include maintenance and repair of BMPs, debris removal, silt/sediment removal, clearing of vegetation around flow control devices to prevent clogging, and maintenance of healthy vegetative cover.

H. Removal and Formal Clean-up

1. Once the site has been successfully stabilized against erosion and sediment transport, and post construction BMPs have been established, the Contractor shall remove temporary sediment control devices and all accumulated silt and debris. The Contractor shall dispose of silt and waste materials in a proper manner. The Contractor shall restore all areas disturbed during this process and stabilize against erosion with surfacing materials.

I. Post-Construction BMPs Installation

1. Post-Construction BMPs, as described in the authorized SWPPP★[and as specified in Section 02952, Erosion Control – Post Construction BMPs], shall be installed before the end of the project.

J. Failure to Adopt and/or Implement an Acceptable SWPPP

1. If the Contractor fails to adopt and implement an acceptable SWPPP, Metropolitan reserves the right to stop the Contractor's work without recompense, and withhold payments owed to the Contractor until such time as an acceptable SWPPP is adopted and implemented, and/or design and implement an acceptable SWPPP, using Metropolitan or other Contractor forces with costs for same deducted from monies owed the Contractor. In addition, Metropolitan reserves the right to suspend work for failure of the Contractor to adopt and implement an acceptable SWPPP in accordance with Article 13 of the General Conditions.

2. Fines levied by authorities having jurisdiction for failure of the Contractor to adopt and implement an acceptable SWPPP shall be deducted from monies owed the Contractor.

PART 2 PRODUCTS

2.01 EROSION CONTROL MATS AND FIBER ROLLS

A. Erosion control mats, fiber rolls and other BMP components containing plastic netting shall not be allowed. The Contractor shall use products containing biodegradable netting.

PART 3 EXECUTION (NOT USED)

END OF SECTION

SECTION 01565
NOISE CONTROL

Note to Specifier (NTS): This Master Specification is not a "standard" specification but a baseline template to tailor for specific project needs. Ensure that editing is consistent with other contract documents.

1. ***Revise text or numbers in brackets [ ].***
2. ***If there is text that does not apply to the project, including optional text identified with a ★, delete the text and type "(Not Used)" next to the article heading. Do not delete article section headings.***
3. ***Verify cross-references when adding or deleting any text.***

Consult the Metropolitan discipline technical lead with any questions.

NTS: When using this section, include the following sections in the project specifications as applicable:
01010, Summary of Work

PART 1 GENERAL

1.01 GENERAL

A. Metropolitan holds the Contractor and all subcontractors liable for meeting the conditions stated herein and in all permits referenced in the specifications and all applicable local, state, and federal regulations, acts, laws, and ordinances.

B. The Contractor shall obtain noise variances from [name of city or county] for nighttime and/or weekend work as required.

C. Implementation of noise control measures required in this section does not relieve the Contractor from complying with the local noise ordinances shown in the following table.

Table 1. Noise Limits

Location / Jurisdiction	Noise Limits	Work Hour Restrictions

1.02 REFERENCES

NTS: Delete references from Part 1 if they are not cited in the spec section. If new references are cited in the text, add the new references in Part 1.

A. General

1. The publications listed below form a part of this specification to the extent referenced. In the event of a conflict between the text of this specification and the references cited herein, the text of this specification shall take precedence.

2. Where a date is given for reference standards, the edition of that date shall be used. Where no date is given for reference standards, the latest edition available on the date of the Notice Inviting Bids shall be used.

B. American National Standards Institute (ANSI)

1. ANSI S1.1, Acoustical Terminology

2. ANSI S1.4, Specifications for Sound Meters

C. American Plywood Association (APA)

D. California Building Standards Commission

1. California Building Code (CBC)

E. International Electrotechnical Commission (IEC)

1. IEC 60942, Electroacoustics - Sound Calibrators

1.03 DEFINITIONS

A. Decibel (dB) - A unit of level which denotes the ratio between 2 quantities which are proportional to power; the number of decibels corresponding to the ratio of 2 amounts of power is 10 times the logarithm to the base (10) of this ratio.

B. Average Hourly Noise (dBA L_{EQ}) – The time period average equivalent A-weighted noise level during the stated measurement period.

C. A-Weighted Sound Level (dBA) – The sound level in decibels as measured on a sound level meter using the A-weighted network.

D. Equivalent Noise Level, L_{EQ} – The average A-weighted noise level during the stated measurement period.

E. NRC – Noise Reduction Coefficient

F. Property Line – For the purposes of this section the property line is the point where a residential or business property begins and extends vertically to the height of the tallest structure on the property, and horizontally to the limits of the property.

G. Sensitive Receptors – Human or animal that can be negatively impacted by high levels and/or durations of noise.

H. Sound Level Meter – an instrument including a microphone, an amplifier, an output meter, and "A" frequency weighting network for the measurement of sound levels which satisfies the pertinent requirements for Type S2A meters in American Standard Specifications for sound level meters in the most recent version of ANSI S1.4.

I. STC – Sound Transmission Class

J. Work Site – An area designated by the Contractor that encompasses the limits of where workers and equipment will be operating.

1.04 SOUND LEVEL MEASUREMENTS

A. Noise level measuring instruments shall comply with the latest version of ANSI S1.4 specifications for sound meters, and be capable of meeting accuracy standards as defined by ANSI Type 1 or Type 2 for sound metering instruments.

B. Noise level measuring instruments shall be maintained per the manufacturer’s calibration recommendations,

C. Sound level measurement shall be measured with a sound level meter using A-weighting and a "slow" response time as defined in the latest version of the most recent version of ANSI S1.1.

D. All noise measurement meters must be equipped with a manufacturer’s recommended wind noise shield at all times during a measurement.

E. All measurements unless stated otherwise shall be provided in the format of the time period average equivalent noise level (L_{EQ}) noting the time period if less than 1-hour.

F. A calibrator as defined by the latest version of IEC 60942 shall be used for checking the calibration of hand-held noise measuring instruments in the field.

G. Noise measuring instruments shall not be exposed to extremes of humidity, and any condensation shall be carefully avoided.

1.05 SUBMITTALS

A. Submittals shall be in accordance with Section 01300, Submittals, and this section.

B. Action Submittals

1. The Contractor shall submit a Noise Control Plan stamped as applicable by a Professional Engineer, including drawings and calculations for noise control structures, 30 working-days prior to mobilization at access sites and

ventilation locations. The Noise Control Plan shall be authorized by the Engineer prior to start of site construction work and shall be implemented prior to site construction work unless otherwise stated in the plan. The Noise Control Plan shall include but not necessarily be limited to the following, to the extent feasible to protect the interests of the public, and to allow for project completion in light of critical work schedules, necessary work methods, and the physical constraints of Metropolitan's right-of-way and available work areas:

a. Identification of sensitive receptors, receptor locations and elevations, and the location and approximate elevation of noise-generating activities (i.e., excavating, staging, parking, meeting areas) and equipment.

(1) Noise levels shall be measured at the nearest property lines.

(2) The Engineer may relocate or add additional locations to monitor noise levels.

b. Pre-construction noise measurements detailing location, time, frequency, results of measurements, and source of noise.

c. Detailed noise attenuation measures, including description of proposed construction activities, description and location of noise control measures, description of how, when, frequency, and where noise measurements shall be taken, and a sample noise monitoring form.

d. Drawings for the types of noise control barriers to be erected for all noise-generating and stationary construction equipment showing the methods of support and anchoring, along with calculations.

e. Proposed noise barriers with required STC ratings and noise reduction methods, modeling results, monitoring strategy, and procedures for mitigation when the noise limits specified in this section are exceeded.

(1) Noise levels shall be calculated/modeled at a height of 5 feet above grade at the property boundary wall at single story residences or businesses.

(a) If the property has a wall which meets the requirement for consideration as a noise control element, the noise level should be calculated at least 10 feet inside the wall, as authorized by the Engineer.

(2) Noise levels shall be calculated/modeled at a height equivalent to 5 feet above each floor level located above the first floor at multi-storied residences or businesses.

f. Qualifications of the person utilizing the instrument to measure the noise levels demonstrating prior experience or training by an experienced professional measuring noise levels with type of instrument being used.

g. A Nighttime Construction Management Plan, if any work is conducted during nighttime hours.

PART 2 PRODUCTS

2.01 GENERAL

A. Noise control materials may be new or used.

1. Used materials shall be sound and free of damage and defects and shall be of a quality and condition to perform their designed function while providing a suitable appearance.

2. Used material must last for the duration of construction.

B. Unless otherwise specified, noise control barrier or material shall have a minimum STC rating of 25.

1. STC 25 requirement may be fulfilled with:

a. Flexible noise control curtains/blankets with a laboratory test specification of STC 25.

b. A double layer system consisting of two curtains/blankets with a minimum test specification of STC 18 with a 6-inch gap between them and ¾ inch thick plywood backing each of the curtains/blankets.

c. An alternative material with proof of STC 25 or greater noise control value.

2. STC 32 requirement may be fulfilled with:

a. Flexible noise control curtains/blankets with a laboratory test specification of STC 32

b. A double layer system consisting of two curtains/blankets with a minimum test specification of STC 25 with a 6-inch gap between them and ¾ inch thick plywood backing each of the curtains/blankets.

c. Two layers of 3/4-inch thick plywood barrier material separated by stud wall constructed with 2 by 4 inch (nominal) studs, 16 inches on center with gaps between studs filled with insulation rated no less than R30.

d. An alternative material with proof of STC 32 or greater noise control value.

C. Noise control barriers may be constructed of plywood or alternate materials meeting STC ratings.

1. All plywood used shall meet the minimum APA specification standard rating of C-D exterior grade.

D. Noise control barriers shall be designed to withstand, and anchored properly to handle, the loading generated by high sustained winds and gusts to which the project area can be subjected. Wind speeds, both sustained and gusts, used to determine loading on noise control barriers shall be in accordance with the CBC and current local building codes and ordinances.

E. Noise control barriers must be maintained in compliance with this specification for the duration of the Contract.

1. Damage, gaps, holes, or weaknesses in the noise control barrier, or any openings between the barriers or barrier and the ground shall be promptly repaired by the Contractor.

F. The Contractor is responsible for maintaining the safety and appearance of the noise control barrier.

G. Noise control barriers must have flush mating surfaces of wall sides when walls are joined together or at corners.

1. Gaps or cracks between wall sections and between the bottom edge of walls and grade shall be closed with material that shall completely close the gaps and be dense enough to attenuate noise.

H. Gates and/or doors in the noise control barrier that are either hinged or rolling shall be constructed of the same or equally effective material as the noise control barrier.

1. Gates and doors in the noise control barrier shall be constructed to ensure that the edges overlap the noise control barrier to eliminate gaps.

I. Noise control barriers that do not provide an NRC rating of 0.85 for the barrier side facing the equipment shall have a construction liner provided on the equipment side of glass fiber or other appropriate type of noise-absorbing material at least two inches thick with a manufacturer's NRC rating of 0.85 or better. Construction liner coverage must be at least 85 percent of the total noise control barrier area.

J. Noise control curtain/blanket shall be constructed of durable, flexible composite material featuring a noise barrier layer bonded to a sound-absorptive material on one side.

1. Noise barrier layer shall be constructed with rugged, impervious material with a surface weight of at least one pound per square foot.

2. Sound-absorptive material shall include a protective facing and securely attached to one side of the noise barrier layer over its entire surface.

3. Materials shall be fire-retardant with a class A fire rating for the composite material system.

K. Noise control curtain materials shall be corrosion-resistant to mild acids and alkalis, salts, oils, and grease. The materials shall also be abuse-resistant, exhibiting superior hanging and tear strength during construction.

1. Curtain/blanket barrier material shall have a minimum breaking strength of 120 lb/in and minimum tear strength of 30 lb/in.

2. Curtain/blanket absorptive material facing shall have a minimum breaking strength of 100 lb/in and minimum tear strength 7 lb/in.

3. Sound-absorptive material shall be mildew-resistant, vermin proof, and non-hygroscopic.

2.02 NOISE CONTROL – VENTILATION EQUIPMENT

A. Ventilation equipment shall be enclosed, or as directed by the Engineer.

B. Contractor shall use electric equipment instead of diesel equipment when possible.

C. Contractor shall implement intensive equipment maintenance program to reduce undue noise.

PART 3 EXECUTION

3.01 GENERAL

A. The Contractor is responsible for obtaining noise variances from [name of city or county] for work outside of standard noise ordinances as detailed in Section 01010, Summary of Work.

B. The Contractor is responsible for design, detailing, and adequacy of the footings, framework, supports, posts, attachment methods and other appurtenances required for the proper erection of noise barriers, with the applicable Professional Engineer stamp.

C. The Contractor is responsible for the maintenance, safety, and appearance of the noise control barrier for the duration of the construction.

D. The Contractor shall locate all noise-generating and stationary construction equipment as far as possible from near-site residential and sensitive receptors and situated so that emitted noise is directed away from the sensitive receptors.

E. Noise-generating equipment shall be oriented such that the source of noise is facing away from the nearest sensitive receptors to the extent possible.

F. The use of a work site noise control barrier, a barrier large enough to encompass the entire work site or a portion of the work site, shall not negate the use of noise control barriers for specific equipment, as noted herein.

G. Reduce equipment idling time to 5 minutes on cranes and construction equipment.

H. Areas where workers gather (break areas, shift-change areas, meeting areas, and sanitary stations) shall be located a minimum of 100 feet away from any residence, or to the greatest extent feasible.

I. Parking areas shall be located a minimum of 150 feet from sensitive receptors. Parking areas within 500 feet of sensitive receptors shall be posted, to prohibit workers from gathering during nighttime hours, and prohibiting radios and music at any time.

J. Fuel deliveries shall be a minimum of 500 feet from residences or to the greatest extent feasible.

K. The Contractor shall perform all work without undue noise and shall make every effort to alleviate or prevent noise nuisances.

L. Site preparation, excavation, site closure activities and delivery trucks shall be allowed during daytime hours only and in compliance with local noise and traffic ordinances.

M. The Contractor's construction vehicles and equipment shall have mufflers. The Contractor shall equip all construction equipment, fixed and mobile, with properly operating and maintained noise mufflers and intake silencers, consistent with the manufacturer standards. Equipment shall be maintained to a minimum standard that includes engine noise baffles and mufflers that meet or exceed the original manufacturer requirements.

N. The Contractor shall utilize the following types of equipment whenever possible: electrical instead of diesel powered equipment, hydraulic tools instead of pneumatic tools, and use of electric welders powered by remote generators.

O. The Contractor shall install a noise control barrier surrounding stationary noise generating equipment in addition to any noise control barriers installed to encompass or shield a portion of the general work site that may be installed by the Contractor as required under these specifications. Noise control barrier and enclosure construction criteria shall follow general guidelines listed in the following section.

1. Noise control barriers constructed by the Contractor shall be designed by a qualified professional with experience in designing noise control barriers.

2. Noise control barriers for equipment shall conform to the requirements for bag filters and large compressors, air humidifiers, and generators, as specified herein.

3. Noise control barriers and enclosures shall be implemented using the most appropriate material, configuration, and location, to achieve the maximum feasible noise reduction.

4. All inner surfaces, including any removable roof sections of a noise control barrier must have a noise absorptive inner layer.

5. Noise control barriers with gates or doors shall be kept closed, except for brief periods of time to allow access to the equipment or construction site.

6. Equipment that has noise control doors shall be operated only with the doors fully closed.

P. The Contractor shall handle, store, apply, and dispose of noise barriers consistent with all applicable federal, state, and local regulations.

3.02 NOISE MONITORING

A. General

1. The Contractor shall measure the noise level for single story and multi-storied residences or businesses in accordance with this section's submittal requirements for the Noise Control Plan.

B. Pre-Construction Noise Measurements

1. Prior to the start of construction, the Contractor shall measure noise levels at the nearest sensitive receptors, as identified in the Noise Control Plan, during daytime and nighttime hours (if nighttime work is required) and shall submit the measurements in the Noise Control Plan.
    a. If noise levels are in excess of the noise limits specified in this section, procedures identified in the Noise Control Plan must be implemented.

C. Noise Monitoring Recordation

1. All monitoring results shall be recorded on a form supplied by the Contractor and authorized by the Engineer.
    a. The noise monitoring form shall note the date and the time of day of the noise monitoring, noise level, noise threshold, location of measurement taken, elevation of where measurement was taken, construction activity being performed, and the person(s) performing the monitoring.
2. Monitoring results shall be submitted to the Engineer at the conclusion of the testing.
3. Only monitoring equipment with current and valid calibration dates/sticker shall be used for monitoring.
4. Monitors shall be experienced in operating the monitoring equipment.

D. Construction Noise Monitoring

1. The Contractor shall perform noise monitoring following initial setup of equipment and noise measurements to measure noise levels during work and to measure the effectiveness of noise control measures.
2. The Contractor shall plan noise measurement times to coincide with scheduled operations of onsite equipment expected to create the loudest noise impacts during the normal measurement schedule and at the beginning of each new equipment activity. Noise levels shall be measured in 30-minute increments noting the lowest and highest noise level measured within 30-minute intervals at the start of construction and at the beginning of each new activity, or as new equipment is used as directed by the Engineer. Should any equipment be in use during nighttime hours, noise levels must be measured in accordance with the above parameters.
3. If noise levels are in excess of the noise limits specified in this section, procedures identified in the Noise Control Plan must be implemented.
    a. After initial installation of noise control barriers and operation of equipment the Contractor shall measure the noise levels at the nearest sensitive receptors.
4. The Contractor may be required to conduct additional noise monitoring following the initial measurements taken, if there are any changes made to the noise control measures, noise generating equipment is relocated, noise control barriers are not properly maintained, or nearby sensitive receptors are impacted.
5. Where measured noise levels at the property line of residences are shown to exceed the noise limits specified in this section, additional feasible noise control measures shall be implemented in an effort to achieve the specified daytime and nighttime thresholds.
    a. Noise monitoring shall be performed to record the achieved level of noise reduction.
6. Metropolitan will have a monitor present during construction activities to ensure that all conditions are implemented and will be allowed to observe all construction activities; however, the Contractor is responsible for implementation.

END OF SECTION

THIS SECTION IS BEING UPDATED

A new version is being developed in the Master Spec Preparation for CCB folder in ProjectWise (Ctrl + Click to follow the link). Consult with the Discipline Tech Lead to determine which version to use for the project.

SECTION 02110
CLEARING, GRUBBING, AND STRIPPING

Note to Specifier (NTS): This Master Specification is not a "standard" specification but a baseline template to tailor for specific project needs. Ensure that editing is consistent with other contract documents.

1. ***Revise text or numbers in brackets [ ].***
2. ***If there is text that does not apply to the project, including optional text identified with a ★, delete the text and type "(Not Used)" next to the article heading. Do not delete article section headings.***
3. ***Verify cross-references when adding or deleting any text.***

Consult the Metropolitan discipline technical lead with any questions.

NTS: When using this section, include the following sections in the project specifications as applicable:
01070, Storm Water Pollution Control Plan (SWPPP) or 01072, Water Pollution Control Plan (WPCP)
★02010, Demolition
02200, Earthwork

NTS: Omit Submittals if the requirements in Part 3 of this section do not call for removing trees or shrubs, or the branches from existing trees.

PART 1 GENERAL

1.01 ★SUBMITTALS

A. Tree sealant: The proposed tree sealant shall be submitted for approval [30 days] prior to the removal of branches from trees that are designated to remain in place.

B. ★Contractor shall provide submittals for removal of trees and shrubs within the limits of the trimming requirements. Submittals shall document the tree and shrub types, and the number and size of trees and shrubs.

PART 2 PRODUCTS (NOT USED)

PART 3 EXECUTION

3.01 SCHEDULING

A. Clearing, grubbing, and stripping shall be completed as a separate item of work before the beginning of excavation, stockpiling, trenching, or fill operations. The completed cleared areas must be approved by the Engineer before the Contractor begins subsequent earthwork items.

B. Areas within the limits of excavation, embankment, building areas, roadways, sidewalks, and other facilities shall be cleared, grubbed, and stripped before earthwork begins.

C. Borrow areas shall be cleared, grubbed, and stripped prior to use. These areas shall be cleared, grubbed, and stripped in stages, as necessary, to ensure that the areas are not contaminated.

D. Areas to be used for stockpiling of material shall be cleared, grubbed, and stripped prior to stockpiling.

E. Clearing, grubbing, and stripping of the length of trench to be excavated each day shall be completed, and material from these operations shall be stockpiled away from the trench area, before the start of trenching.

3.02 PRESERVATION OF EXISTING CONDITIONS

A. ★Existing trees, shrubbery, other vegetation, structures, pavements, or utilities designated to remain in place shall be protected from damage resulting from the work.

NTS: Edit the following paragraphs as necessary to ensure that environmental and permit requirements are included.

B. ★Special protection shall be provided at [oak trees] [plant material requiring special protection].

C. ★Tree branches shall be cut and removed only where, in the opinion of the Engineer, such cutting is necessary to effect construction operations. Tree branches other than those that must be removed to perform the work shall be trimmed to provide a balanced appearance. Scars resulting from the removal of branches shall be treated with an approved tree sealant.

NTS: Ensure that no agreement exists contrary to the following requirements.

D. ★Trees, shrubs, or plants within the limits of [work] [the easement on private property] that interfere with excavation or trenching may be removed as long as they are kept intact with their root system and protected as described in this section.

1. Plant locations shall be documented and submitted to the Engineer before the plants are removed.

NTS: Confirm that topsoil exists on the project. If present, edit the following paragraph to ensure compatibility with its use as indicated.

2. The root system of the trees, shrubs, or plants shall be balled, bound in burlap, heeled into [suitable stripped materials or soils] [the stockpiled topsoil] from the excavation, and kept watered as required.

3. Upon completion of work in the affected areas, the trees, shrubs, or plants shall be replanted in their original positions.

4. When a tree, shrub, or plant that has been disturbed or otherwise damaged by the Contractor dies within 6 months from the time that it was disturbed, damaged, or replanted; the tree, shrub, or plant shall be replaced in kind and size.

3.03 CLEARING, GRUBBING, AND STRIPPING

A. General

1. Clearing, grubbing, and stripping shall extend to five feet beyond the limits of excavations and fill slopes, but not beyond the limits of work.

NTS: The project will have either a Storm Water Pollution Control Plan (SWPPP) per Section 01070 or a Water Pollution Control Plan (WPCP) per Section 01072 depending upon the amount of land disturbance. Select the appropriate reference in the following paragraph.

2. Temporary surface, storm water, and erosion control in conformance with the approved [Storm Water Pollution Prevention Plan (SWPPP) in accordance with Section 01070 / Water Pollution Control Plan (WPCP) in accordance with Section 01072] shall be implemented concurrent with the clearing, stripping, and grubbing operations.

3. Waste-disposal areas shall be cleared, grubbed, and stripped only as necessary for the disposal of waste material.

4. Areas that have been cleared, grubbed, and stripped shall be maintained free of objectionable growth until the work has been completed.

B. Clearing

1. Clearing shall consist of cutting, removing, and disposing of objectionable material from the ground surface, such as trash, trees, brush, logs, stumps, weeds, grasses, fences, structures, and natural or artificial obstructions of any kind.

2. During the clearing process, trees shall be cut so that they fall into the area to be cleared. Trees and stumps requiring removal shall not be cut to ground level but shall be pulled completely from the ground.

3. Clearing shall also include the removal and disposal from the jobsite of trash piles and rubbish created prior to and during the construction work.

NTS: If the removal of pavements and structures is required during clearing activities for the project, then include Section 02010, Demolition, in the project specifications and include the following article.

4. ★Prior to removal of pavement or structures, scoring or sawcutting is required as specified in Section 02010, Demolition.

C. Grubbing

1. Grubbing shall consist of digging up, removing, and disposing of objectionable material found at or below the ground surface such as trash, trees, brush, logs, stumps, roots, and natural or artificial obstructions of any kind that will interfere with the required excavations and construction.

2. Unless otherwise shown or specified, stumps, roots over one inch in diameter, buried logs, and all other objectionable materials shall be removed to a depth of 3 feet below the existing ground surface, or the structure or pipeline subgrade, whichever is deeper.

NTS: Confirm that topsoil exists on the project. If present, edit the following section to ensure that special provisions for its use are included. Section 02200, Earthwork, should also be edited to ensure compatibility with the reference indicated herein.

D. Stripping

1. Stripping shall consist of the removal of organic materials, sod, ★[topsoil,] grass, and grass roots from the areas designated to be stripped.

2. Except under previously existing paving or structures, or when otherwise shown on the drawings, existing soil materials shall be stripped to a depth of 8 inches below the original ground surface.

3. Stripped materials ★[and topsoil] shall be stored in accordance with Section 02200, Earthwork, and shall not be mixed with borrow materials, but shall be retained for placement in the top 12 inches of fill in the areas to be landscaped.

4. The Contractor shall ensure that stripped materials ★[and stockpiled topsoil] are identified and marked so that they are not incorporated into fill or embankment.

3.04 DISPOSAL OF CLEARING, GRUBBING, AND STRIPPING DEBRIS

A. Burning of combustible materials will not be permitted.

B. Material removed from the jobsite shall be disposed of legally.

END OF SECTION

Appendix B

Jurisdictional Delineation Report

Rincon Consultants, Inc.

250 East 1st Street, Suite 1400
Los Angeles, California 90012

213 788 4842

info@rinconconsultants.com
www.rinconconsultants.com

January 12, 2022
Project No: 20-09668

Michelle Morrison, Environmental Specialist
The Metropolitan Water District of Southern California
P.O. Box 54153
Los Angeles, California 90054-0153
Via email: mmorrison@mwdh2o.com

Subject: **Jurisdictional Delineation for the Garvey Reservoir Rehabilitation Project, Monterey Park, California**

Dear Ms. Morrison:

This Jurisdictional Delineation (JD) letter report has been prepared by Rincon Consultants, Inc. (Rincon) to assist The Metropolitan Water District of Southern California (Metropolitan) with project planning for the Garvey Reservoir Rehabilitation Project (project). Specifically, this JD provides an assessment of two detention basins in the southwest portion of the project site, which are hereafter referred to as "Basin 1" and "Basin 2." If determined to be necessary by Metropolitan, this report can also be used by the United States Army Corps of Engineers (USACE) to confirm the extent of potential jurisdiction under Section 404 of the Clean Water Act (CWA), the Regional Water Quality Control Board (RWQCB) to confirm the extent of potential jurisdiction pursuant to Section 401 of the CWA and the Porter-Cologne Water Quality Control Act, and the California Department of Fish and Wildlife (CDFW) to confirm the extent of potential jurisdiction pursuant to California Fish and Game Code (CFGC) Section 1600 et seq.

Project Location

The project site is an approximately 130-acre portion of a 142-acre property located at 1061 South Orange Avenue in Monterey Park, California (Los Angeles County Assessor's Parcel Numbers 5260-013-910 and 5260-013-905). See Figure 1 in Attachment A for a project location map. The project site is developed with the Garvey Reservoir in the central portion of the site along with various appurtenant structures and features throughout the site. The site is accessible from State Route 60, located approximately 0.9 mile south of the project site, and Interstate 10, located approximately 1.4 miles north of the project site. Surrounding land uses include residential neighborhoods to the west, north, south, and east; Hillcrest Elementary School to the east; the Monterey Park City Yard to the north; and Garvey Ranch Park to the north. The approximate center of the project site occurs at latitude 34.049522°N and longitude -118.116403°W. The project site is within the *El Monte, California* United States Geological Survey (USGS) 7.5-minute topographic quadrangle. The Public Land Survey System depicts the project site as within Township 01S, Range 12W, Sections 26, 27, 34, and 35, San Bernardino Meridian.

Methods

A literature review and desktop evaluation of existing aerial imagery and published datasets were conducted for the JD, followed by a field survey and delineation of potential jurisdictional waters. The study area defined for the JD, hereinafter referred to as the "Study Area," includes the area occupied by the two detention basins in the southwest portion of the project site. The Study Area analyzed in this report encompasses roughly 0.52 acre (Attachment A, Figure 2).

Literature Review

Prior to surveying the Study Area, Rincon's Wetland Scientist Malek Al-Marayati reviewed recent aerial photography of the site (Google Earth Pro 2021). To aid in characterizing the nature and extent of jurisdictional waters potentially occurring in the Study Area, resources reviewed included the most recent *El Monte*, *California* USGS 7.5-minute topographic quadrangle map (USGS 2021a) and the United States Department of Agriculture (USDA) Natural Resources Conservation Service (NRCS) Web Soil Survey (USDA NRCS 2021a). Additionally, the *National Hydrography Dataset* (USGS 2021b) and the United States Fish and Wildlife Service (USFWS) *National Wetlands Inventory* (USFWS 2021) were reviewed to determine if potential wetlands and/or other waters had been previously mapped in or near the Study Area. The *State Soils Data Access (SDA) Hydric Soils List* (USDA NRCS 2021b) was also reviewed to determine if any soil map unit types mapped in or near the Study Area were classified as hydric.

Field Delineation

On November 23, 2021, Malek Al-Marayati surveyed the Study Area on foot for potential wetlands and non-wetland aquatic resources. Current USACE and State Water Resources Control Board (SWRCB) delineation procedures and guidance were used to identify and delineate any wetlands and/or waters of the United States/State potentially subject to USACE and RWQCB jurisdiction (USACE 1987, 2008a, 2008b, and 2021; Lichvar et al. 2016; SWRCB 2019). Likewise, current CDFW procedures and guidance were used to identify and delineate any streambeds, rivers, or associated riparian habitat potentially subject to CDFW jurisdiction. Spatial data representing wetland sampling points, the limits of wetland waters, and other observation points were mapped using a Juniper Systems Geode Global Positioning System (GPS) with sub-meter accuracy and were also plotted on aerial photographs. The data was subsequently transferred to Rincon's geographic information system (GIS) and used in combination with recent, high-resolution aerial photographs and topographic datasets to map the extent of jurisdictional features in the Study Area. Representative site photographs are presented in Attachment B. Wetland Determination Data Forms for the presence/absence of wetlands and potential jurisdiction are presented in Attachment C.

Existing Setting

The Study Area is located in the San Gabriel Valley within the suburban area of the city of Monterey Park and is characterized by hot summers and mild winters. The basins are situated at the base of a south-facing hillslope below the Garvey Reservoir, which is an enclosed water storage facility operated by Metropolitan. The detention basins consist of earthen material and are approximately 600 feet southwest of the reservoir. The Study Area is abutted to the west and south by a residential

neighborhood. The topography of the Study Area consists of steep slopes and flat beds associated with the detention basins. Elevation ranges between 420 and 450 feet above mean sea level.

Hydrology

The Study Area is located in the Los Angeles River Watershed (Hydrologic Unit Code [HUC12] 180701050401). The USGS *National Hydrography Dataset* identifies the detention basins as "lakes/ponds" and the Garvey Reservoir as a "reservoir." The USFWS *National Wetlands Inventory* does not recognize any wetlands or riverine features in the Study Area. The Garvey Reservoir is an enclosed water storage facility that does not contain surface water. The two detention basins in the Study Area were constructed in an upland area at the base of a slope south of the Garvey Reservoir for the purpose of flood control. Specifically, rainwater and water used for cleaning the reservoir cover is pumped from the cover into a series of pipes that drain into the basins via a rainwater collection system.

Basin 1 receives stormwater runoff from adjacent uplands via two v-ditches to the northwest and northeast of the basin. Additionally, flow from the rainwater collection system seeps into the basin from underneath the v-ditch to the northwest (Attachment A, Figure 3). Flow from Basin 1 is conveyed to an inlet drain in the bed of the basin that leads to a culvert. The culvert conveys flow southward for approximately 50 feet before spilling into Basin 2 via an outfall structure. Flow from Basin 2 is conveyed to another inlet drain and ultimately into the Los Angeles County underground stormwater system, which eventually drains into the Pacific Ocean. Flowing surface water, which was draining into Basin 1 from the rainwater collection system and ultimately exiting into the inlet drain of Basin 2, was observed at the time of the survey.

Soils

The USDA NRCS Web Soil Survey depicts one soil map unit within the Study Area: Counterfeit-Urban land complex, 10 to 35 percent slopes, terraced (USDA NRCS 2021a). Site-specific soil observations were generally consistent with those mapped by the USDA NRCS Web Soil Survey. Counterfeit and Urban Land series soils are poorly drained soils that occur on hillslopes. These soils are typically human-transported material consisting mostly of colluvium and/or residuum weathered from sedimentary rock. This soil map unit is not included on the *National Hydric Soils List* (USDA NRCS 2021b).

Vegetation

Vegetation in the Study Area consists of California buckwheat scrub (*Eriogonum fasciculatum* Shrubland Alliance) on the steep slopes in upland areas adjacent to the detention basins (Sawyer et al. 2009). Vegetation in the basins consists predominantly of non-native herbaceous species dominated by variable flatsedge (*Cyperus difformis*) and hyssop loosestrife (*Lythrum hyssopifolia*), which are both classified as obligate wetland plant species (OBL) in the National Wetland Plant List (Lichvar et al. 2016; USACE 2021). Vegetation is mowed regularly in the basins for flood control maintenance.

Field Results and Discussion

Both detention basins in the Study Area are described below and depicted in Figure 3 in Attachment A. Representative photographs of each feature are presented in Attachment B.

Basin 1 and Basin 2

The detention basins in the Study Area receive flow from a rainwater collection system as well as surface runoff from adjacent uplands. Flow from the basins is ultimately conveyed into the Los Angeles County underground stormwater system.

A total of three soil test pits (Sampling Points) were excavated within the detention basins (Attachment A, Figure 3). Sampling Point 01 (SP01) was located in the bed of Basin 2 near the basin's edge, and the Rincon Wetland Scientist determined SP01 is within a wetland due to the presence of all three USACE defined wetland parameters: hydrophytic vegetation, hydric soils, and wetland hydrology. The soil profile at SP01 consisted of a Depleted Matrix and a Loamy Gleyed Matrix with saturation present starting at a depth of 5 inches from the soil surface. The following obligate wetland species (OBL) were observed at this location: variable flatsedge and loosestrife.

Sampling Point 02 (SP02) was located approximately 20 feet east of SP01 outside of the visible boundaries of the Basin 2 wetland feature on a west-facing hillslope. SP02 is not within a wetland due to the absence of all three USACE defined wetland parameters (i.e., hydrophytic vegetation, hydric soils, and wetland hydrology). Vegetation at this location consisted solely of upland species such as olive tree (*Olea europaea*), California buckwheat (*Eriogonum fasciculatum*), and slender oat (*Avena barbata*).

Sampling Point 03 (SP03) was located in the bed of Basin 1, and the Rincon Wetland Scientist determined SP03 is a wetland due to the presence of all three USACE defined wetland parameters. The soil profile at SP03 consisted of a high percentage of redox concentrations starting at a depth of 9 inches from the surface and saturation starting at the surface. The presence of redox concentrations starting in the upper layer of the soil profile of a depressional landform at SP03 met the requirements for the Redox Depressions hydric soil indicator. A water table was present starting at a depth of 18 inches. Due to the consistency of topography and upland vegetation species composition on the slopes surrounding both Basin 1 and Basin 2, an upland sampling point was not examined for Basin 1. The limits of wetland waters were determined by the consistency of hydrophytic vegetation and topography for both basins.

USACE Waters of the United States

In accordance with guidance from the United States Environmental Protection Agency (USEPA) and USACE on CWA Jurisdiction following the United States Supreme Court's decision in *Rapanos v. U.S.* (June 19, 2006), the USACE will assert jurisdiction over traditional navigable waters (TNWs), non-navigable tributaries of TNWs that are Relatively Permanent Waters (RPWs), and wetlands that are adjacent to TNWs and directly abut RPWs (USEPA and USACE 2008). TNWs include all of the "navigable waters of the U.S." defined in 33 Code of Federal Regulations Part 329 and by pertinent federal court decisions. RPWs convey water flow seasonally, typically for at least three months. In addition, non-navigable tributaries that are not relatively permanent (non-RPWs), wetlands adjacent to non-RPWs, and wetlands adjacent to but that do not directly abut a RPW will be found jurisdictional based on a fact-specific analysis that they have a significant nexus with a TNW.

The significant nexus evaluation considers the volume, duration, and frequency of water flow in the tributary and the proximity of the tributary to a TNW, as well as the hydrologic, ecologic, and other functions performed by the tributary and all of its adjacent wetlands. The CWA also defines non-jurisdictional waters in 33 Code of Federal Regulations Part 328, which include "[s]tormwater control features constructed or excavated in upland or in non-jurisdictional waters to convey, treat, infiltrate, or

store stormwater run-off." Therefore, Basin 1 and Basin 2 would require a significant nexus determination to be considered under the jurisdiction of the USACE.

Hydrology Factors

The detention basins receive flow from a rainwater collection system as well as surface runoff from adjacent uplands. Flow from the basins is conveyed via an underground stormwater system until ultimately draining into the Rio Hondo, an RPW, approximately 4 miles south of the basins. The Rio Hondo merges with the Los Angeles River, another RPW, which eventually conveys flow to the Pacific Ocean. However, the detention basins are not adjacent to and do not abut any RPWs, TNWs, or non-RPW tributaries.

Ecological Factors

The detention basins are situated in a highly disturbed area surrounded by residential development and industrial land uses associated with the existing Garvey Reservoir. Vegetation within the basins is dominated solely by invasive herbaceous plant species and is regularly mowed for flood control maintenance. The basins receive flow from a collection system that conveys flows from reservoir cover cleaning and precipitation events directly into an underground stormwater system. It is therefore unlikely that the basins contribute significantly to the transport of nutrients or sediment to downstream navigable waters.

Significant Nexus Evaluation

The detention basins, which convey flow directly into an underground stormwater system, are physically separated from any RPW, TNW, or non-RPW tributary and are hydrologically connected to receiving waters only though an underground storm drain system that comingles flows from the basins with runoff from the surrounding suburban areas. The basins are unlikely to significantly affect the chemical, physical, or biological integrity of any downstream navigable waters. Given these factors, it is reasonable to conclude that the detention basins in the Study Area do not have a significant nexus with a TNW, and therefore are not within the jurisdiction of USACE pursuant to Section 404 of the CWA.

RWQCB Waters of the State

Pursuant to Section II of the *Statewide Wetland Definition and Procedures for Discharges of Dredged or Fill Material* (SWRCB 2019), artificial wetlands[1] are only considered Waters of the State when they are not subject to ongoing operations and maintenance. Both detention basins were excavated in an upland area during the construction of Garvey Reservoir in 1954. The basins continue to be used as part of a rainwater collection system for flood control purposes and are regularly maintained by Metropolitan; therefore, the detention basins are not Waters of the State and are not within the jurisdiction of RWQCB pursuant to Section 401 of the CWA and the Porter-Cologne Water Quality Control Act.

CDFW Jurisdiction

Pursuant to Division 2, Chapter 6, Section 1602 of the CFGC, CDFW regulates all diversions, obstructions, or changes to the natural flow or bed, channel or bank of any river, stream, or lake that supports fish or

[1] Artificial wetlands are wetlands that result from human activity.

wildlife. The detention basins in the Study Area are not wholly or part of any river, stream, or lake and therefore are not within the jurisdiction of CDFW pursuant to CFGC Section 1600 et seq.

V-Ditches (Non-jurisdictional)

Several concrete-lined v-ditches that convey runoff from adjacent uplands into the detention basins are present in the Study Area. These features do not exhibit bed and bank, ordinary high water mark, or any riverine or wetland hydrology indicators. Flows in these features receive minimal runoff from adjacent uplands during storm events and contribute flow to Basin 1 and Basin 2. Vegetation is absent throughout the non-jurisdictional v-ditches. Therefore, these concrete-lined v-ditches are not wetland features and are not under USACE, RWQCB, or CDFW jurisdiction.

Conclusions and Recommendations

The detention basins examined in this report are not subject to USACE jurisdiction pursuant to Section 404 of the CWA, RWQCB jurisdiction pursuant to Section 401 of the CWA or the Porter-Cologne Water Quality Control Act, or CDFW jurisdiction pursuant to CFGC Section 1600 et seq.

The findings and conclusions presented in this report, including the location and extent of areas subject to regulatory jurisdiction, represent the professional opinion of the consultant biologists. These findings and conclusions should be considered preliminary and at final discretion of the applicable resource agency.

Sincerely,
Rincon Consultants, Inc.

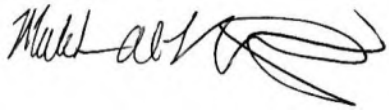

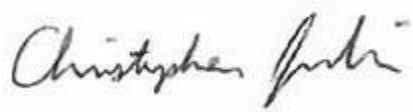

Malek Al-Marayati, MS
Wetland Scientist

Christopher Julian
Principal/Regulatory Specialist

Attachments

Attachment A Figures
Attachment B Representative Site Photographs
Attachment C Wetland Determination Data Forms

References

California Fish and Game Code (CFGC). 2017. Division 3: Fish and Game Generally. Chapter 9: California Wildlife Protection Act of 1990. Article 2: California Wildlife Protection. Section 2785.

Google Earth Pro. November 2021.

Lichvar, R.W. et al. 2016. The National Wetland Plant List: 2016 wetland ratings. Phytoneuron 2016-30: 1–17. Published April 28, 2016.

Sawyer, J.O., T. Keeler-Wolf, and J.M. Evens. 2009. A Manual of California Vegetation, Second Edition. California Native Plant Society, Sacramento, CA.

State Water Resources Control Board (SWRCB). 2019. State Wetland Definition and Procedures for Discharges of Dredges or Fill Material to Waters of the State. Sacramento, CA.

United States Army Corps of Engineers (USACE). Environmental Laboratory. 1987. Technical Report Y-97-1. In: United States Army Corps of Engineers Wetlands Delineation Manual. United States Army Corps of Engineers Waterways Experiment Station. Vicksburg, MS.

---------. 2008a. Regional Supplement to the Corps of Engineers Wetland Delineation Manual: Arid West Region (Version 2.0). United States Army Corps of Engineers Research and Development Center. Vicksburg, MS.

---------. 2008b. A *Field Guide to the Identification of the Ordinary High Water mark (OHWM) in the Arid West Region of the Western United States.* Technical Report ERDC/CRREL TR-08-12. U.S. Army Engineer Research and Development Center, Cold Regions Research and Engineering Laboratory. Hanover, NH.

---------. 2021. National Wetland Plant List. Website. https://cwbi-app.sec.usace.army.mil/nwpl_static/v34/home/home.html (accessed December 2021).

United States Department of Agriculture (USDA) Natural Resources Conservation Service (NRCS). 2021a. Web Soil Survey. Soil Survey Area: Los Angeles County, California. https://websoilsurvey.sc.egov.usda.gov/App/HomePage.htm (accessed November 2021).

---------. 2021b. Lists of Hydric Soils. National Cooperative Soil Survey, U.S. Department of Agriculture.: https://www.nrcs.usda.gov/wps/portal/nrcs/main/soils/use/hydric/ (accessed November 2021).

United States Environmental Protection Agency (USEPA) and United States Army Corps of Engineers (USACE). 2008. Clean Water Act Jurisdiction Following the U.S. Supreme Court's Decision in Rapanos v. United States & Carabell v. United States. Published 2 December 2008.

United States Fish and Wildlife Service. 2021. National Wetland Inventory Data Mapper https://www.fws.gov/wetlands/Data/Mapper.html (accessed November 2021).

United States Geological Survey (USGS). 2021a. El Monte, California USGS 7.5-minute topographic quadrangle. Accessed via The National Map. https://viewer.nationalmap.gov/advanced-viewer/ (accessed November 2021).

---------. 2021b. National Hydrography Dataset. Accessed via The National Map Viewer. https://viewer.nationalmap.gov/advanced-viewer/ (accessed November 2021).

Attachment A

Figures

Figure 1 Regional Location

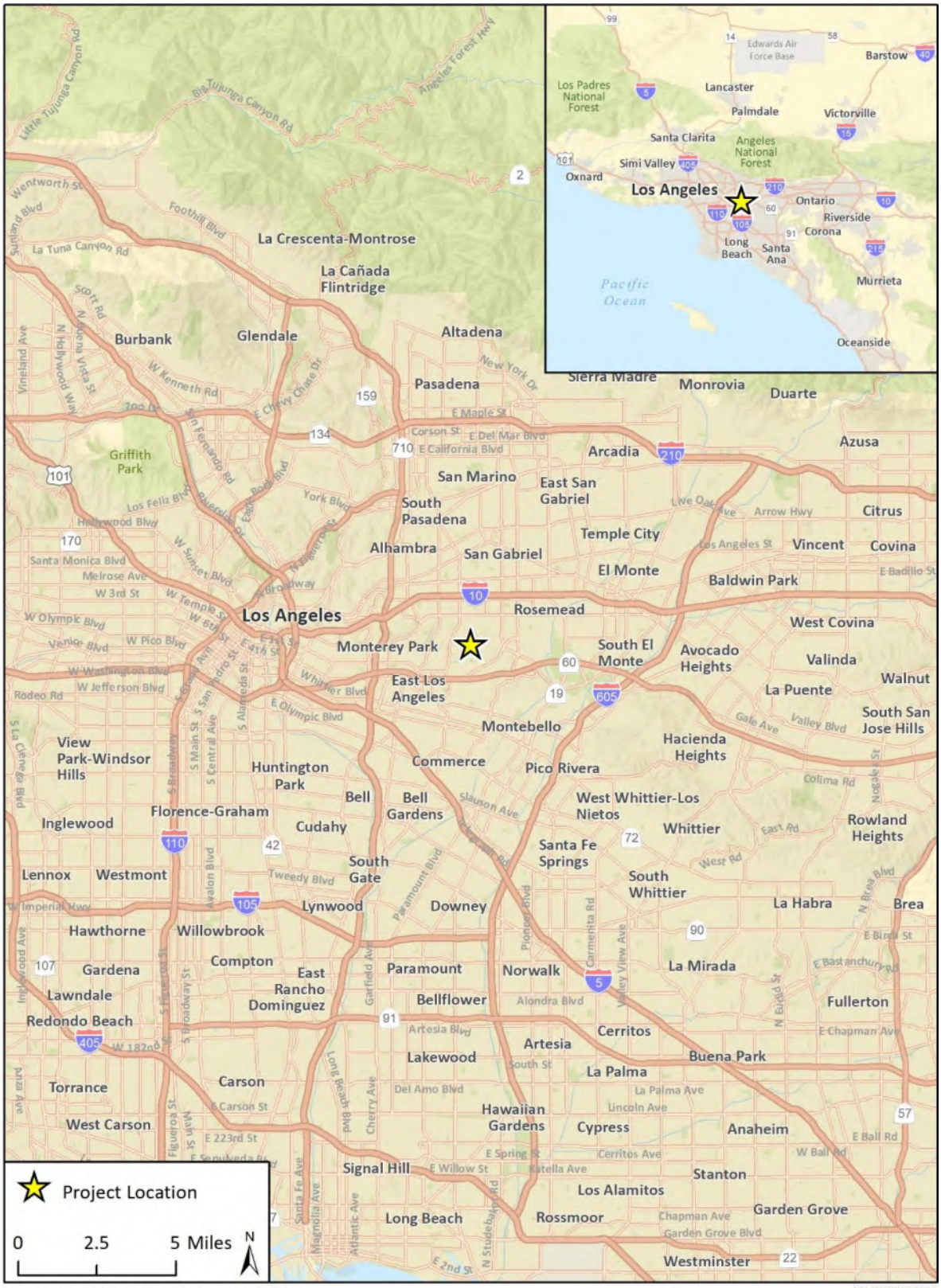

Imagery provided by Esri and its licensors © 2022.

Figure 2 Study Area

Imagery provided by Esri and its licensors © 2022.

Figure 3 Jurisdictional Delineation

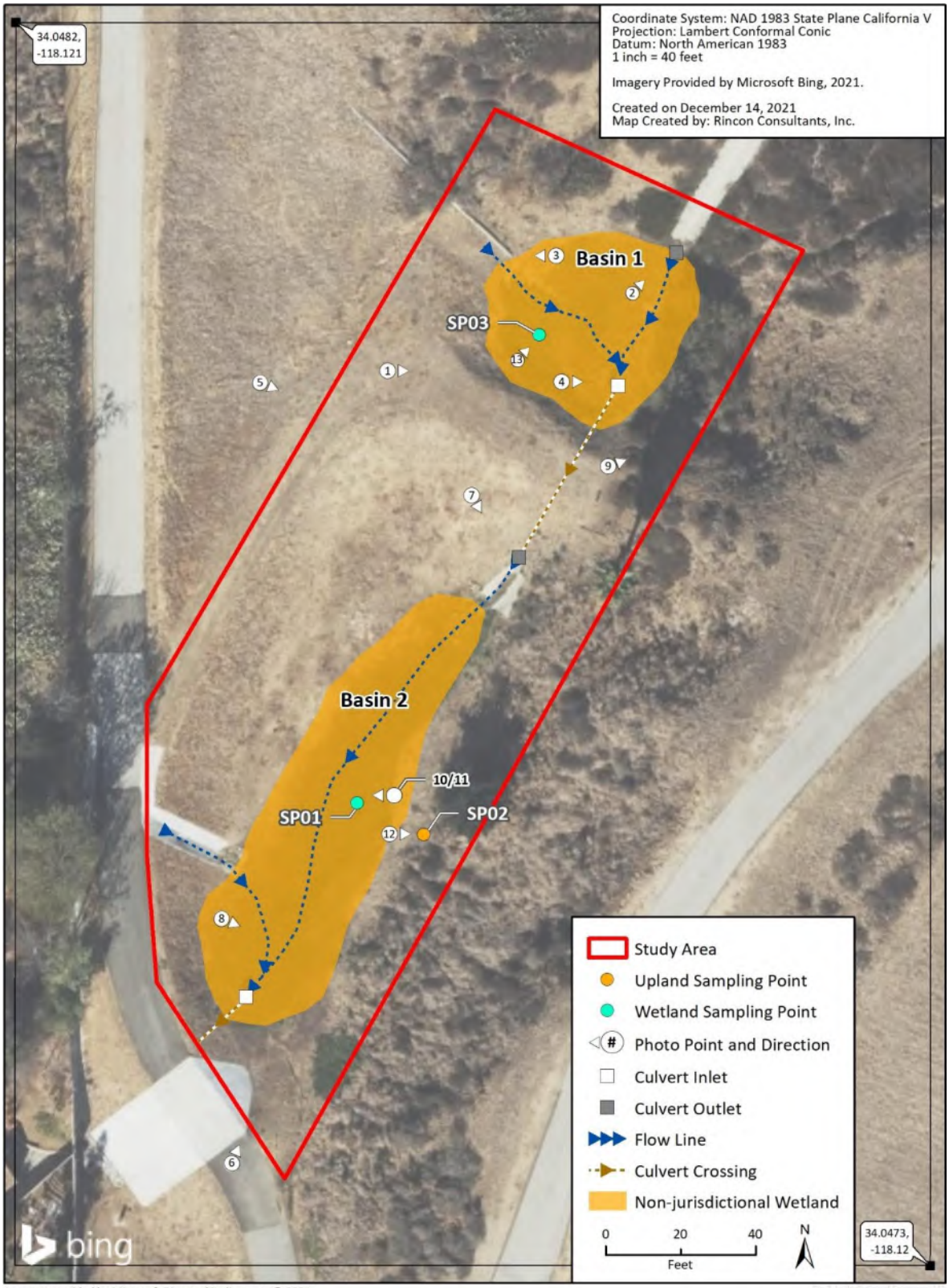

Imagery provided by Microsoft Bing and its licensors © 2021.

Attachment B

Representative Site Photographs

Photograph 1. Overview of mowed vegetation in Basin 1, facing east.

Photograph 2. Surface water seeping from beneath v-ditch into Basin 1, facing northeast.

Photograph 3. Corrugated pipe conveying runoff into Basin 1, facing west.

Photograph 4. Inlet drain receiving flow from Basin 1, facing east.

Photograph 5. Berm above culvert separating Basin 1 from Basin 2, facing southeast.

Photograph 6. Overview of mowed vegetation in Basin 2, facing north-northeast.

Photograph 7. Culvert outlet conveying flow from Basin 1 to Basin 2, facing southeast.

Photograph 8. Inlet drain receiving flow from Basin 2, facing east-southeast.

Photograph 9. Upland vegetation dominated by California buckwheat (*Eriogonum fasciculatum*) on steep hillslopes surrounding Basin 1 and Basin 2, facing northeast.

Photograph 10. Sampling Point 1 (SP01) in area adjacent to surface water in Basin 2, facing west.

Photograph 11. Gleyed soil matrix and redox concentrations in SP01.

Photograph 12. Sampling Point 2 (SP02) on hillslope abutting Basin 2, facing east.

Photograph 13. Sampling Point 3 (SP03) in bed of Basin 1, facing northeast.

Attachment C

Wetland Determination Data Forms

WETLAND DETERMINATION DATA FORM – Arid West Region

Project/Site: Garvey Reservoir Rehabilitation Project City/County: Monterey Park/Los Angeles Sampling Date: 11/23/2021

Applicant/Owner: Metropolitan Water District of Southern California State: CA Sampling Point: SP01

Investigator(s): Malek Al-Marayati Section, Township, Range: 34, 01S, 12W

Landform (hillslope, terrace, etc.): basin Local relief (concave, convex, none): none Slope (%): 0

Subregion (LRR): C Lat: 34.047597 Long: -118.120784 Datum: WGS84

Soil Map Unit Name: Counterfeit-Urban land complex, 10 to 35 percent slopes, terraced NWI classification: none

Are climatic / hydrologic conditions on the site typical for this time of year? Yes ✔ No _____ (If no, explain in Remarks.)

Are Vegetation ✔, Soil _____, or Hydrology _____ significantly disturbed? Are "Normal Circumstances" present? Yes _____ No ✔

Are Vegetation _____, Soil _____, or Hydrology _____ naturally problematic? (If needed, explain any answers in Remarks.)

SUMMARY OF FINDINGS – Attach site map showing sampling point locations, transects, important features, etc.

Hydrophytic Vegetation Present?	Yes ✔	No _____	**Is the Sampled Area within a Wetland?** **Yes ✔ No _____**
Hydric Soil Present?	Yes ✔	No _____	
Wetland Hydrology Present?	Yes ✔	No _____	

Remarks:

Vegetation in detention basin regularly mowed for flood control maintenance.

VEGETATION – Use scientific names of plants.

Tree Stratum (Plot size: 30 ft.)	Absolute % Cover	Dominant Species?	Indicator Status
1. NA			
2.			
3.			
4.			
	0 = Total Cover		
Sapling/Shrub Stratum (Plot size: 15 ft.)			
1. NA			
2.			
3.			
4.			
5.			
	0 = Total Cover		
Herb Stratum (Plot size: 5 ft.)			
1. Cyperus difformis	40	Y	OBL
2. Lythrum hyssopifolia	15	Y	OBL
3. Stenotaphrum secundatum	6	N	FAC
4. Helminthotheca echioides	5	N	FAC
5. Poa pratensis	4	N	FAC
6. Gazania linearis	2	N	UPL
7.			
8.			
	72 = Total Cover		
Woody Vine Stratum (Plot size: 15 ft.)			
1. NA			
2.			
	0 = Total Cover		

% Bare Ground in Herb Stratum 28 % Cover of Biotic Crust 0

Dominance Test worksheet:

Number of Dominant Species That Are OBL, FACW, or FAC: 2 (A)

Total Number of Dominant Species Across All Strata: 2 (B)

Percent of Dominant Species That Are OBL, FACW, or FAC: 100% (A/B)

Prevalence Index worksheet:

Total % Cover of:	Multiply by:
OBL species _____	x 1 = _____
FACW species _____	x 2 = _____
FAC species _____	x 3 = _____
FACU species _____	x 4 = _____
UPL species _____	x 5 = _____
Column Totals: _____ (A)	_____ (B)

Prevalence Index = B/A = _____

Hydrophytic Vegetation Indicators:

✔ Dominance Test is >50%

___ Prevalence Index is ≤3.0[1]

___ Morphological Adaptations[1] (Provide supporting data in Remarks or on a separate sheet)

___ Problematic Hydrophytic Vegetation[1] (Explain)

[1]Indicators of hydric soil and wetland hydrology must be present, unless disturbed or problematic.

Hydrophytic Vegetation Present? **Yes ✔ No _____**

Remarks:

SOIL

Sampling Point: SP01

Profile Description: (Describe to the depth needed to document the indicator or confirm the absence of indicators.)

Depth (inches)	Matrix Color (moist)	Matrix %	Redox Features Color (moist)	Redox %	Type[1]	Loc[2]	Texture	Remarks
0-5	2.5Y 3/2	100					CL	
5-12	10YR 4/2	85	7.5 YR 5/6	15	C	PL	CL	
12-20	GLEY1 4/5GY	88	7.5 YR 5/8	12	C	M	C	

[1]Type: C=Concentration, D=Depletion, RM=Reduced Matrix, CS=Covered or Coated Sand Grains. [2]Location: PL=Pore Lining, M=Matrix.

Hydric Soil Indicators: (Applicable to all LRRs, unless otherwise noted.)

- ___ Histosol (A1)
- ___ Histic Epipedon (A2)
- ___ Black Histic (A3)
- ___ Hydrogen Sulfide (A4)
- ___ Stratified Layers (A5) (**LRR C**)
- ___ 1 cm Muck (A9) (**LRR D**)
- ___ Depleted Below Dark Surface (A11)
- ___ Thick Dark Surface (A12)
- ___ Sandy Mucky Mineral (S1)
- ___ Sandy Gleyed Matrix (S4)
- ___ Sandy Redox (S5)
- ___ Stripped Matrix (S6)
- ___ Loamy Mucky Mineral (F1)
- ✔ Loamy Gleyed Matrix (F2)
- ✔ Depleted Matrix (F3)
- ___ Redox Dark Surface (F6)
- ___ Depleted Dark Surface (F7)
- ___ Redox Depressions (F8)
- ___ Vernal Pools (F9)

Indicators for Problematic Hydric Soils[3]:

- ___ 1 cm Muck (A9) (**LRR C**)
- ___ 2 cm Muck (A10) (**LRR B**)
- ___ Reduced Vertic (F18)
- ___ Red Parent Material (TF2)
- ___ Other (Explain in Remarks)

[3]Indicators of hydrophytic vegetation and wetland hydrology must be present, unless disturbed or problematic.

Restrictive Layer (if present):

Type: _____

Depth (inches): _____

Hydric Soil Present? **Yes** ✔ **No** ___

Remarks:

HYDROLOGY

Wetland Hydrology Indicators:

Primary Indicators (minimum of one required; check all that apply)

- ___ Surface Water (A1)
- ___ High Water Table (A2)
- ✔ Saturation (A3)
- ___ Water Marks (B1) (**Nonriverine**)
- ___ Sediment Deposits (B2) (**Nonriverine**)
- ___ Drift Deposits (B3) (**Nonriverine**)
- ___ Surface Soil Cracks (B6)
- ___ Inundation Visible on Aerial Imagery (B7)
- ___ Water-Stained Leaves (B9)
- ___ Salt Crust (B11)
- ___ Biotic Crust (B12)
- ___ Aquatic Invertebrates (B13)
- ___ Hydrogen Sulfide Odor (C1)
- ✔ Oxidized Rhizospheres along Living Roots (C3)
- ✔ Presence of Reduced Iron (C4)
- ___ Recent Iron Reduction in Tilled Soils (C6)
- ___ Thin Muck Surface (C7)
- ___ Other (Explain in Remarks)

Secondary Indicators (2 or more required)

- ___ Water Marks (B1) (**Riverine**)
- ___ Sediment Deposits (B2) (**Riverine**)
- ___ Drift Deposits (B3) (**Riverine**)
- ___ Drainage Patterns (B10)
- ___ Dry-Season Water Table (C2)
- ___ Crayfish Burrows (C8)
- ___ Saturation Visible on Aerial Imagery (C9)
- ___ Shallow Aquitard (D3)
- ___ FAC-Neutral Test (D5)

Field Observations:

Surface Water Present? Yes ___ No ✔ Depth (inches): _____

Water Table Present? Yes ___ No ✔ Depth (inches): _____

Saturation Present? (includes capillary fringe) Yes ✔ No ___ Depth (inches): 5

Wetland Hydrology Present? **Yes** ✔ **No** ___

Describe Recorded Data (stream gauge, monitoring well, aerial photos, previous inspections), if available:

Remarks:

AAD+ reaction positive starting at 5-inch depth from soil surface.

WETLAND DETERMINATION DATA FORM – Arid West Region

Project/Site: Garvey Reservoir Rehabilitation Project City/County: Monterey Park/Los Angeles Sampling Date: 11/23/2021

Applicant/Owner: Metropolitan Water District of Southern California State: CA Sampling Point: SP02

Investigator(s): Malek Al-Marayati Section, Township, Range: 34, 01S, 12W

Landform (hillslope, terrace, etc.): hillslope Local relief (concave, convex, none): concave Slope (%): 15

Subregion (LRR): C Lat: 34.047574 Long: -118.120726 Datum: WGS84

Soil Map Unit Name: Counterfeit-Urban land complex, 10 to 35 percent slopes, terraced NWI classification: none

Are climatic / hydrologic conditions on the site typical for this time of year? Yes ✔ No _____ (If no, explain in Remarks.)

Are Vegetation _____, Soil _____, or Hydrology _____ significantly disturbed? Are "Normal Circumstances" present? Yes ✔ No _____

Are Vegetation _____, Soil _____, or Hydrology _____ naturally problematic? (If needed, explain any answers in Remarks.)

SUMMARY OF FINDINGS – Attach site map showing sampling point locations, transects, important features, etc.

Hydrophytic Vegetation Present?	Yes _____	No ✔	**Is the Sampled Area within a Wetland?** **Yes** _____ **No** ✔
Hydric Soil Present?	Yes _____	No ✔	
Wetland Hydrology Present?	Yes _____	No ✔	

Remarks:

VEGETATION – Use scientific names of plants.

Tree Stratum (Plot size: 30 ft.)	Absolute % Cover	Dominant Species?	Indicator Status
1. Olea europaea	13	Y	UPL
2.			
3.			
4.			
	13 = Total Cover		

Sapling/Shrub Stratum (Plot size: 15 ft.)			
1. Eriogonum fasciculatum	30	Y	UPL
2. Atriplex semibaccata	5	N	FAC
3.			
4.			
5.			
	35 = Total Cover		

Herb Stratum (Plot size: 5 ft.)			
1. Avena barbata	80	Y	UPL
2. Salsola tragus	3	N	FACU
3.			
4.			
5.			
6.			
7.			
8.			
	83 = Total Cover		

Woody Vine Stratum (Plot size: 15 ft.)			
1. NA			
2.			
	0 = Total Cover		

% Bare Ground in Herb Stratum 17 % Cover of Biotic Crust 0

Dominance Test worksheet:

Number of Dominant Species That Are OBL, FACW, or FAC: 0 (A)

Total Number of Dominant Species Across All Strata: 3 (B)

Percent of Dominant Species That Are OBL, FACW, or FAC: 0% (A/B)

Prevalence Index worksheet:

Total % Cover of:	Multiply by:
OBL species _____	x 1 = _____
FACW species _____	x 2 = _____
FAC species _____	x 3 = _____
FACU species _____	x 4 = _____
UPL species _____	x 5 = _____
Column Totals: _____ (A)	_____ (B)

Prevalence Index = B/A = _____

Hydrophytic Vegetation Indicators:

___ Dominance Test is >50%

___ Prevalence Index is ≤3.0[1]

___ Morphological Adaptations[1] (Provide supporting data in Remarks or on a separate sheet)

___ Problematic Hydrophytic Vegetation[1] (Explain)

[1]Indicators of hydric soil and wetland hydrology must be present, unless disturbed or problematic.

Hydrophytic Vegetation Present? **Yes** _____ **No** ✔

Remarks:

SOIL

Sampling Point: SP02

Profile Description: (Describe to the depth needed to document the indicator or confirm the absence of indicators.)

Depth (inches)	Matrix Color (moist)	Matrix %	Redox Features Color (moist)	Redox %	Type[1]	Loc[2]	Texture	Remarks
0-20	10 YR 3/4	100					SL	

[1]Type: C=Concentration, D=Depletion, RM=Reduced Matrix, CS=Covered or Coated Sand Grains. [2]Location: PL=Pore Lining, M=Matrix.

Hydric Soil Indicators: (Applicable to all LRRs, unless otherwise noted.)

___ Histosol (A1)
___ Histic Epipedon (A2)
___ Black Histic (A3)
___ Hydrogen Sulfide (A4)
___ Stratified Layers (A5) (**LRR C**)
___ 1 cm Muck (A9) (**LRR D**)
___ Depleted Below Dark Surface (A11)
___ Thick Dark Surface (A12)
___ Sandy Mucky Mineral (S1)
___ Sandy Gleyed Matrix (S4)
___ Sandy Redox (S5)
___ Stripped Matrix (S6)
___ Loamy Mucky Mineral (F1)
___ Loamy Gleyed Matrix (F2)
___ Depleted Matrix (F3)
___ Redox Dark Surface (F6)
___ Depleted Dark Surface (F7)
___ Redox Depressions (F8)
___ Vernal Pools (F9)

Indicators for Problematic Hydric Soils[3]:

___ 1 cm Muck (A9) (**LRR C**)
___ 2 cm Muck (A10) (**LRR B**)
___ Reduced Vertic (F18)
___ Red Parent Material (TF2)
___ Other (Explain in Remarks)

[3]Indicators of hydrophytic vegetation and wetland hydrology must be present, unless disturbed or problematic.

Restrictive Layer (if present):

Type: _____

Depth (inches): _____

Hydric Soil Present? **Yes** _____ **No** ✔

Remarks:

HYDROLOGY

Wetland Hydrology Indicators:

Primary Indicators (minimum of one required; check all that apply)

___ Surface Water (A1)
___ High Water Table (A2)
___ Saturation (A3)
___ Water Marks (B1) (**Nonriverine**)
___ Sediment Deposits (B2) (**Nonriverine**)
___ Drift Deposits (B3) (**Nonriverine**)
___ Surface Soil Cracks (B6)
___ Inundation Visible on Aerial Imagery (B7)
___ Water-Stained Leaves (B9)
___ Salt Crust (B11)
___ Biotic Crust (B12)
___ Aquatic Invertebrates (B13)
___ Hydrogen Sulfide Odor (C1)
___ Oxidized Rhizospheres along Living Roots (C3)
___ Presence of Reduced Iron (C4)
___ Recent Iron Reduction in Tilled Soils (C6)
___ Thin Muck Surface (C7)
___ Other (Explain in Remarks)

Secondary Indicators (2 or more required)

___ Water Marks (B1) (**Riverine**)
___ Sediment Deposits (B2) (**Riverine**)
___ Drift Deposits (B3) (**Riverine**)
___ Drainage Patterns (B10)
___ Dry-Season Water Table (C2)
___ Crayfish Burrows (C8)
___ Saturation Visible on Aerial Imagery (C9)
___ Shallow Aquitard (D3)
___ FAC-Neutral Test (D5)

Field Observations:

Surface Water Present? Yes _____ No ✔ Depth (inches): _____

Water Table Present? Yes _____ No ✔ Depth (inches): _____

Saturation Present? (includes capillary fringe) Yes _____ No ✔ Depth (inches): _____

Wetland Hydrology Present? **Yes** _____ **No** ✔

Describe Recorded Data (stream gauge, monitoring well, aerial photos, previous inspections), if available:

Remarks:

WETLAND DETERMINATION DATA FORM – Arid West Region

Project/Site: Garvey Reservoir Rehabilitation Project City/County: Monterey Park/Los Angeles Sampling Date: 11/23/2021

Applicant/Owner: Metropolitan Water District of Southern California State: CA Sampling Point: SP03

Investigator(s): Malek Al-Marayati Section, Township, Range: 34, 01S, 12W

Landform (hillslope, terrace, etc.): basin Local relief (concave, convex, none): concave Slope (%): 3

Subregion (LRR): C Lat: 34.047940 Long: -118.120625 Datum: WGS84

Soil Map Unit Name: Counterfeit-Urban land complex, 10 to 35 percent slopes, terraced NWI classification: none

Are climatic / hydrologic conditions on the site typical for this time of year? Yes ✔ No _____ (If no, explain in Remarks.)

Are Vegetation ✔, Soil _____, or Hydrology _____ significantly disturbed? Are "Normal Circumstances" present? Yes _____ No ✔

Are Vegetation _____, Soil _____, or Hydrology _____ naturally problematic? (If needed, explain any answers in Remarks.)

SUMMARY OF FINDINGS – Attach site map showing sampling point locations, transects, important features, etc.

Hydrophytic Vegetation Present?	Yes ✔	No _____	**Is the Sampled Area within a Wetland?** **Yes ✔ No _____**
Hydric Soil Present?	Yes ✔	No _____	
Wetland Hydrology Present?	Yes ✔	No _____	

Remarks:

Detention basin is regularly mowed for flood control maintenance.

VEGETATION – Use scientific names of plants.

Tree Stratum (Plot size: 30 ft.)	Absolute % Cover	Dominant Species?	Indicator Status
1. NA			
2.			
3.			
4.			
	0 = Total Cover		
Sapling/Shrub Stratum (Plot size: 15 ft.)			
1. Washingtonia robusta	5	Y	FACW
2.			
3.			
4.			
5.			
	5 = Total Cover		
Herb Stratum (Plot size: 5 ft.)			
1. Cyperus difformis	10	Y	OBL
2. Poa pratensis	25	Y	FAC
3. Lythrum hyssopifolia	12	Y	OBL
4. Helminthotheca ehcioides	3	N	FAC
5.			
6.			
7.			
8.			
	50 = Total Cover		
Woody Vine Stratum (Plot size: 15 ft.)			
1. NA			
2.			
	0 = Total Cover		

% Bare Ground in Herb Stratum 50 % Cover of Biotic Crust 0

Dominance Test worksheet:

Number of Dominant Species That Are OBL, FACW, or FAC: 4 (A)

Total Number of Dominant Species Across All Strata: 4 (B)

Percent of Dominant Species That Are OBL, FACW, or FAC: 100% (A/B)

Prevalence Index worksheet:

Total % Cover of:	Multiply by:
OBL species _____	x 1 = _____
FACW species _____	x 2 = _____
FAC species _____	x 3 = _____
FACU species _____	x 4 = _____
UPL species _____	x 5 = _____
Column Totals: _____ (A)	_____ (B)

Prevalence Index = B/A = _____

Hydrophytic Vegetation Indicators:

✔ Dominance Test is >50%

___ Prevalence Index is ≤3.0[1]

___ Morphological Adaptations[1] (Provide supporting data in Remarks or on a separate sheet)

___ Problematic Hydrophytic Vegetation[1] (Explain)

[1]Indicators of hydric soil and wetland hydrology must be present, unless disturbed or problematic.

Hydrophytic Vegetation Present? **Yes ✔ No _____**

Remarks:

SOIL

Sampling Point: SP03

Profile Description: (Describe to the depth needed to document the indicator or confirm the absence of indicators.)

Depth (inches)	Matrix Color (moist)	Matrix %	Redox Features Color (moist)	Redox %	Type[1]	Loc[2]	Texture	Remarks
0-9	10YR 3/4	96	7.5YR 5/8	4	C	M	SCL	
9-20	10YR 3/3	90	7.5YR 5/8	10	C	M	SCL	

[1]Type: C=Concentration, D=Depletion, RM=Reduced Matrix, CS=Covered or Coated Sand Grains. [2]Location: PL=Pore Lining, M=Matrix.

Hydric Soil Indicators: (Applicable to all LRRs, unless otherwise noted.)

- ___ Histosol (A1)
- ___ Histic Epipedon (A2)
- ___ Black Histic (A3)
- ___ Hydrogen Sulfide (A4)
- ___ Stratified Layers (A5) (**LRR C**)
- ___ 1 cm Muck (A9) (**LRR D**)
- ___ Depleted Below Dark Surface (A11)
- ___ Thick Dark Surface (A12)
- ___ Sandy Mucky Mineral (S1)
- ___ Sandy Gleyed Matrix (S4)
- ___ Sandy Redox (S5)
- ___ Stripped Matrix (S6)
- ___ Loamy Mucky Mineral (F1)
- ___ Loamy Gleyed Matrix (F2)
- ___ Depleted Matrix (F3)
- ___ Redox Dark Surface (F6)
- ___ Depleted Dark Surface (F7)
- ✔ Redox Depressions (F8)
- ___ Vernal Pools (F9)

Indicators for Problematic Hydric Soils[3]:

- ___ 1 cm Muck (A9) (**LRR C**)
- ___ 2 cm Muck (A10) (**LRR B**)
- ___ Reduced Vertic (F18)
- ___ Red Parent Material (TF2)
- ✔ Other (Explain in Remarks)

[3]Indicators of hydrophytic vegetation and wetland hydrology must be present, unless disturbed or problematic.

Restrictive Layer (if present):

Type: _____

Depth (inches): _____

Hydric Soil Present? **Yes** ✔ **No** ___

Remarks:

Soils are saturated throughout 0-20 inch profile.

HYDROLOGY

Wetland Hydrology Indicators:

Primary Indicators (minimum of one required; check all that apply)

- ___ Surface Water (A1)
- ___ High Water Table (A2)
- ✔ Saturation (A3)
- ___ Water Marks (B1) (**Nonriverine**)
- ___ Sediment Deposits (B2) (**Nonriverine**)
- ___ Drift Deposits (B3) (**Nonriverine**)
- ___ Surface Soil Cracks (B6)
- ___ Inundation Visible on Aerial Imagery (B7)
- ___ Water-Stained Leaves (B9)
- ___ Salt Crust (B11)
- ___ Biotic Crust (B12)
- ___ Aquatic Invertebrates (B13)
- ___ Hydrogen Sulfide Odor (C1)
- ___ Oxidized Rhizospheres along Living Roots (C3)
- ___ Presence of Reduced Iron (C4)
- ___ Recent Iron Reduction in Tilled Soils (C6)
- ___ Thin Muck Surface (C7)
- ___ Other (Explain in Remarks)

Secondary Indicators (2 or more required)

- ___ Water Marks (B1) (**Riverine**)
- ___ Sediment Deposits (B2) (**Riverine**)
- ___ Drift Deposits (B3) (**Riverine**)
- ___ Drainage Patterns (B10)
- ___ Dry-Season Water Table (C2)
- ___ Crayfish Burrows (C8)
- ___ Saturation Visible on Aerial Imagery (C9)
- ___ Shallow Aquitard (D3)
- ___ FAC-Neutral Test (D5)

Field Observations:

Surface Water Present? Yes ___ No ✔ Depth (inches): _____

Water Table Present? Yes ✔ No ___ Depth (inches): 18

Saturation Present? (includes capillary fringe) Yes ✔ No ___ Depth (inches): 0

Wetland Hydrology Present? **Yes** ✔ **No** ___

Describe Recorded Data (stream gauge, monitoring well, aerial photos, previous inspections), if available:

Remarks:

Appendix C

Cultural Resources Assessment

Garvey Reservoir Rehabilitation Project

Cultural Resources Assessment

prepared for

The Metropolitan Water District of Southern California
P.O. Box 54153
Los Angeles, California 90054-0153
Contact: Michelle Morrison, Environmental Specialist

prepared by

Rincon Consultants, Inc.
250 East 1st Street, Suite 1400
Los Angeles, California 90012
Contact: Steven Treffers, MHP

November 2021

RINCON CONSULTANTS, INC.
Environmental Scientists | Planners | Engineers
rinconconsultants.com

Please cite this report as follows:

Perzel, Rachel, Andrew Rodriquez, Kyle Montgomery, Steven Treffers, Ken Victorino, and Shannon Carmack

2021. *Garvey Reservoir Rehabilitation Project Cultural Resources Assessment*. Rincon Consultants, Inc. Project No. 20-09668. Report on file at the South Central Coastal Information Center, California State University, Fullerton.

Table of Contents

Executive Summary 1
Purpose and Scope 1
Dates of Investigation 1
Summary of Findings 1
Unanticipated Discovery of Cultural Resources 2
Unanticipated Discovery of Human Remains 2
1 Introduction 3
1.1 Project Location 3
1.2 Project Description 6
1.3 Personnel 7
2 Regulatory Setting 8
2.1 California Environmental Quality Act 8
3 Natural and Cultural Setting 11
3.1 Environmental Setting 11
3.2 Prehistoric Setting 11
3.3 Ethnographic Context 13
3.4 History 14
4 Background Research 17
4.1 Cultural Resources Records Search 17
4.2 Archival and Background Research 17
4.3 Sacred Lands File Search 18
4.4 Field Survey 18
5 Results 19
5.1 Garvey Reservoir Property 19
6 Findings and Conclusions 29
6.1 Unanticipated Discovery of Cultural Resources 29
6.2 Unanticipated Discovery of Human Remains 29
7 References 30

Tables

Table 1 Construction Chronology 26

Figures

Figure 1 Project Location Map 4
Figure 2 Project Site Features 5
Figure 3 Site Photographs of Reservoir, I/O Tower, Junction Structure, and Adminstration Building/Water Quality Laboratory 21
Figure 4 Site Photographs of Former Caustic Soda Structure, Backup Generator Enclosure, Sodium Hypoclorite Tank Farm, and Construction Staging Area 22
Figure 5 Site Photographs of Construction Trailer Staging Area, Surge Tank, and Communications Site 24
Figure 6 Garvey Reservoir in 1964 26

Appendices

Appendix A CHRIS Search Results
Appendix B Sacred Lands File Results
Appendix C California DPR 523 Series Forms

Executive Summary

Purpose and Scope

The Metropolitan Water District of Southern California ("Metropolitan") retained Rincon Consultants, Inc. ("Rincon") to conduct a cultural resources assessment for the Garvey Reservoir Rehabilitation Project ("project"), which would occur within the Garvey Reservoir property at 1061 South Orange Avenue in Monterey Park, Los Angeles County, California ("subject property/project site"). The project involves various upgrades, replacements, and improvements to the subject property, including replacement of the reservoir's floating cover and liner, replacement of the standby generator, seismic upgrades at the reservoir's inlet/outlet (I/O) tower and Junction Structure, upgrades to and/or redesign of the facility electrical system, improvements to the surge tank telemetry equipment, redesign of and upgrades to the Administration Building and Water Quality Laboratory, and other miscellaneous site upgrades. This assessment was prepared to support the project's compliance with the requirements of the California Environmental Quality Act (CEQA). The assessment includes searches of the California Historical Resources Information System (CHRIS) and the Native American Heritage Commission Sacred Lands File (SLF), background and archival research, an archaeological and built environment field survey of the project site, the recordation and evaluation of one property for historical resources eligibility, and preparation of this report.

Dates of Investigation

An archaeological and built environment survey was conducted on October 12, 2021. In addition, Rincon contacted the South Central Coastal Information Center to request a CHRIS search and the Native American Heritage Commission to request an SLF search on September 23, 2021. The results of the SLF search were received on October 26, 2021, and the results of the CHRIS search were received on November 29, 2021. The historical evaluation summarized in this assessment was ongoing from September to December 2021.

Summary of Findings

A search of the CHRIS did not identify the presence of prehistoric resources on the property or within a 0.25-mile buffer. The search identified one historic-period transmission tower that was previously recorded, evaluated and recommended ineligible for historic designation within the 0.25-mile buffer but outside the subject property. The SLF search conducted for this study returned positive results. However, SLF searches are conducted based on United States Geological Survey quadrangle maps, which cover an approximately 50- to 70-square-mile area per map. Therefore, positive SLF search results alone do not indicate the presence of tribal heritage resources in the immediate vicinity of the subject property. The archaeological survey conducted for this study was negative for archaeological resources.

The background research and survey conducted for this study confirmed the subject property includes several built environment features that are at least 45 years of age. The property was therefore recorded and evaluated for historical resources eligibility on California Department of Parks and Recreation 523 Series forms. As a result of the current study, the Garvey Reservoir

property at 1061 South Orange Avenue in Monterey Park is recommended ineligible for listing in the National Register of Historic Places and the California Register of Historical Resources and therefore is not considered a historical resource pursuant to Section 15064.5(a) of the CEQA Guidelines.

Based on the findings of the current investigation as summarized above, the potential for impacts to historical or archaeological resources under CEQA is **low.**

Although no known archaeological deposits are expected to be present within the project site, unanticipated discoveries during construction remain a possibility. As standard best management practices, Rincon recommends implementation of the following measures in the unlikely event of an unanticipated discovery during project construction.

Unanticipated Discovery of Cultural Resources

In the unlikely event cultural resources are encountered during ground-disturbing activities, work in the immediate area should halt and an archaeologist meeting the Secretary of the Interior's Professional Qualifications Standards for archaeology (National Park Service 1983) should be contacted immediately to evaluate the find. If the discovery proves to be eligible for listing in the National Register of Historic Places or the California Register of Historical Resources, additional work such as data recovery excavation and Native American consultation to treat the find may be warranted.

Unanticipated Discovery of Human Remains

If human remains are unexpectedly encountered, the State of California Health and Safety Code Section 7050.5 states no further disturbance shall occur until the County Coroner has made a determination of origin and disposition pursuant to Public Resources Code Section 5097.98. In the unlikely event of an unanticipated discovery of human remains, the County Coroner must be notified immediately. If the human remains are determined to be prehistoric, the Coroner will notify the Native American Heritage Commission, which will determine and notify a most likely descendant (MLD). The MLD has 48 hours from being granted site access to make recommendations for the disposition of the remains. If the MLD does not make recommendations within 48 hours, the landowner shall reinter the remains in an area of the property secure from subsequent disturbance.

1 Introduction

The Metropolitan Water District of Southern California ("Metropolitan") retained Rincon Consultants, Inc. ("Rincon") to conduct a cultural resources assessment for the Garvey Reservoir Rehabilitation Project ("project"). The project would occur within the Garvey Reservoir property at 1061 South Orange Avenue in Monterey Park, Los Angeles County, California ("subject property/project site"). The project involves various upgrades, replacements, and improvements to the subject property, including replacement of the reservoir's floating cover and liner, replacement of the standby generator, seismic upgrades at the reservoir's inlet/outlet (I/O) tower and Junction Structure, upgrades to and/or redesign of the facility electrical system, improvements to the surge tank telemetry equipment, redesign of and upgrades to the Administration Building and Water Quality Laboratory, and other miscellaneous site upgrades. This assessment was prepared in support of the project's compliance with the requirements of the California Environmental Quality Act (CEQA). The assessment includes searches of the California Historical Resources Information System (CHRIS) and the Native American Heritage Commission (NAHC) Sacred Lands File (SLF), background and archival research, an archaeological and built environment field survey of the project site, the recordation and evaluation of the Garvey Reservoir property for historical resources eligibility, and preparation of this report.

1.1 Project Location

The project site is an approximately 130-acre portion of a 142-acre property located at 1061 South Orange Avenue in Monterey Park (Los Angeles County Assessor's Parcel Numbers 5260-013-910 and 5260-013-905). The site is regionally accessible from State Route 60, located approximately 0.9 mile south of the project site, and Interstate 10, located approximately 1.4 miles north of the project site. Local access to the property is provided via South Orange Avenue, off of which three driveways are located immediately north of the South Orange Avenue/Tegner Drive intersection. Surrounding land uses include residential neighborhoods to the west, north, south, and east; Hillcrest Elementary School to the east; the Monterey Park City Yard to the north; and Garvey Ranch Park to the north (Figure 1).

The project site is developed with Garvey Reservoir in the central portion of the site. In addition, various associated appurtenant structures and features are located throughout the site, including the Administration Building and Water Quality Laboratory, standby generator, Sodium Hypochlorite Tank Farm, and Junction Structure located in a paved yard in the east-central portion of the project site; a surge tank, construction trailer and paved parking area located immediately south of the reservoir; an unpaved construction staging area located immediately northwest of the reservoir; a communications tower and paved parking lot located southeast of the reservoir; and paved roadways, power lines, mature trees, and landscaping throughout the project site (Figure 2).

Figure 1 Project Location Map

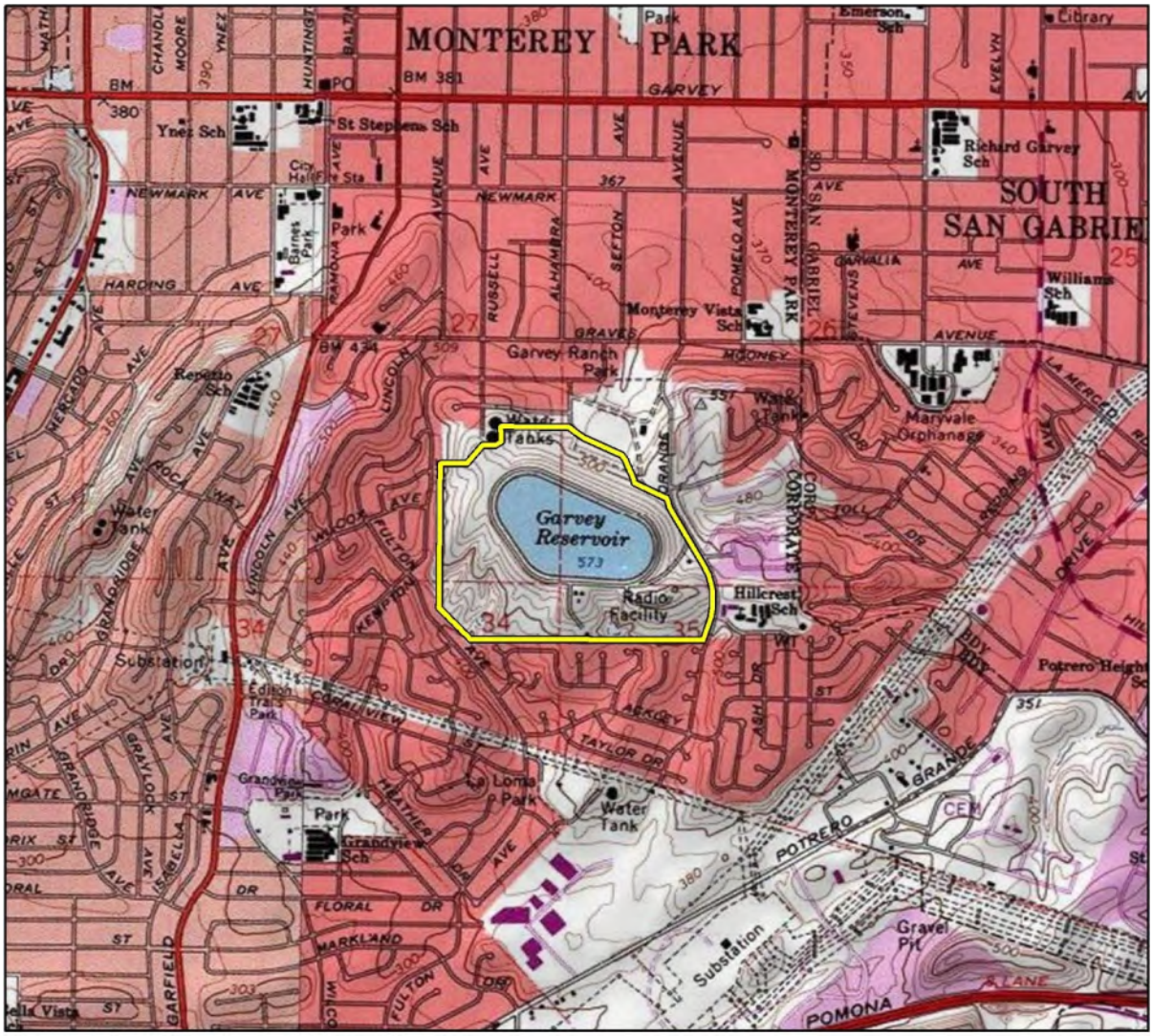

Basemap provided by National Geographic Society, Esri and their licensors © 2021. El Monte Quadrangle. T01.0S R12.0W S26, 27,34, 35. The topographic representation depicted in this map may not portray all of the features currently found in the vicinity today and/or features depicted in this map may have changed since the original topographic map was assembled.

Project Location

0 1,000 2,000 Feet

N

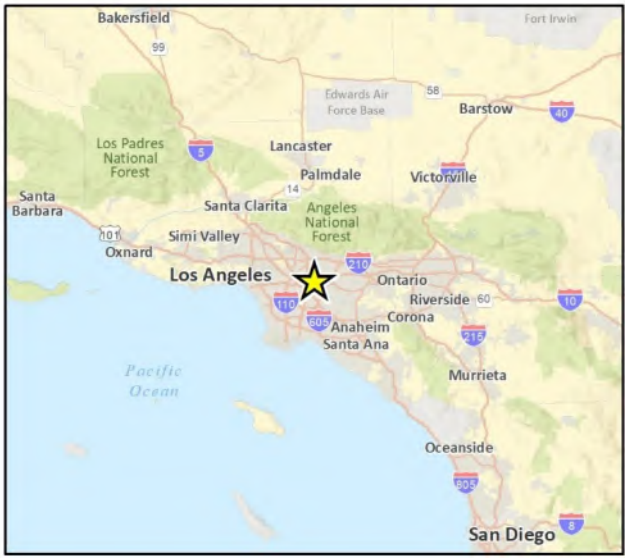

Figure 2 Project Site Features

Imagery provided by Microsoft Bing and its licensors © 2021.

1.2 Project Description

The proposed project entails a variety of rehabilitation components, each of which is summarized below.

Reservoir Cover and Liner

The proposed project includes the following elements related to the reservoir cover and liner:

- Redesign of the I/O tower float assembly and seismic upgrades;
- Replacement of the polypropylene liner floating cover;
- Inspection of the reservoir drainage system underneath the liner (including the underlying geo-textile cushion, underdrain, circulation piping, and appurtenant work) and peripheral piping and repair or upgrade of the system and piping, if needed;
- Upgrade of the leak detection and monitoring system; and
- Reservoir start-up testing procedures.

I/O Tower Seismic Upgrades

The proposed project includes the seismic rehabilitation of the I/O tower and access bridge. Equipment within the I/O tower and lighting fixtures along the access bridge would also likely be upgraded and replaced. In addition, whether or not the fixtures along the access bridge are replaced, LED lights would be installed in the fixtures.

Junction Structure

The proposed project includes replacement of five valves in the Junction Structure to improve reliability.

Facility Electrical System

The proposed project includes the upgrade of the Garvey Reservoir property's electrical system, including its instrumentation. The majority of proposed electrical system work would occur underground between the Administration Building/Water Quality Laboratory and Sodium Hypochlorite Tank Farm. An underground conduit may also be installed between the Administration Building and the existing communications tower on the southeastern portion of the project site.

Standby Generator

The proposed project would replace the facility's existing standby generator and its appurtenant electrical system, including transfer switches and the switchgear unit. The existing concrete block building housing the generator would be demolished. The new generator would likely be larger than the existing generator and would either be located in the open air under a canopy structure or would be located in a new enclosed building.

Surge Tank Telemetry

The proposed project includes improvements to the existing surge tank's telemetry equipment to connect it to associated pumps and to upgrade pressure switches and automated tank controls. A

direct cable from the associated pumps in the Junction Structure to the surge tank pressure switch would also be installed.

Administration Building and Water Quality Laboratory Rehabilitation

The proposed project includes the following elements related to the Administration Building/Water Quality Laboratory:

- Relocation of the existing Water Quality Laboratory to the space currently occupied by the Administration Building and vice-versa;
- Modifications to the existing restroom for compliance with the 2010 ADA Standard for Accessible Design and 2019 California Building Code (or most recent iteration in effect at the time);
- Provision of a new Americans with Disabilities Act (ADA)-compliant parking stall with accessible path of travel to the new building entrance;
- Relocation of the emergency eye wash station from outside the Administration Building to immediately adjacent to the Water Quality Laboratory;
- Replacement of the retaining wall on the south side of the structure to prevent ponding and overflow from precipitation; and
- Modifications/upgrades to the heating, ventilation, and air conditioning (HVAC) system and water heater.

Miscellaneous Site Upgrades

The proposed project also includes various smaller miscellaneous upgrades throughout the project site, which may include the following:

- Upgrades to the ammonia feed system;
- Repaving or repair of existing reservoir roads;
- Replacement of chain link fencing and gates within property and along the perimeter;
- Landscaping removal and/or replacement; and
- Security upgrades.

1.3 Personnel

This assessment was managed by Architectural Historian Rachel Perzel, MA. The report was co-authored by Ms. Perzel, Assistant Architectural Historian Andrew Rodriguez, MA, and Archaeologist Kyle Montgomery, BA. Senior oversight for the study was provided by Senior Architectural Historian, Steven Treffers, MHP, and Senior Archaeologist and the study's Principal Investigator, Ken Victorino, MA, Registered Professional Archaeologist. Principal Architectural Historian Shannon Carmack reviewed this report for quality assurance and quality control. All of the above-noted contributors to this study meet the Secretary of the Interior's Professional Qualification Standards in their respective fields (36 Code of Federal Regulations [CFR] Part 61). GIS Analyst Allysen Valencia prepared the figures found in the report.

2 Regulatory Setting

This section includes a discussion of the applicable laws, ordinances, regulations, and standards governing cultural resources that should be adhered to before and during implementation of the proposed project.

2.1 California Environmental Quality Act

As part of CEQA, California Public Resources Code (PRC) Section 21804.1 requires lead agencies determine if a project could have a significant impact on historical resources. As defined in PRC Section 21084.1, a historical resource is a resource listed in, or determined eligible for listing in, the California Register of Historical Resources (CRHR); a resource included in a local register of historical resources or identified in a historical resources survey pursuant to PRC Section 5024.1(g); or any object, building, structure, site, area, place, record, or manuscript that a lead agency determines to be historically significant. PRC Section 21084.1 also states a resource meeting any of the above criteria is generally considered historically or culturally significant unless the preponderance of evidence demonstrates otherwise. Resources listed in the National Register of Historic Places (NRHP), discussed in the following subsection, are automatically listed in the CRHR and are therefore historical resources under CEQA.

Under CEQA, an effect that results in a substantial adverse change in the significance of a historical resource is considered a significant effect on the environment (CEQA Guidelines Section 15064.5[b]). A substantial adverse change could result from physical demolition, destruction, relocation, or alteration of the resource or its immediate surroundings such that the significance of the historical resource would be materially impaired (CEQA Guidelines Section 15064.5[b][1]). Material impairment is defined as the demolition or alteration in an adverse manner of those physical characteristics of a historical resource that convey its historical significance and that justify its inclusion in, or eligibility for inclusion in, the CRHR or a local register of historical resources (CEQA Guidelines Section 15064.5[b][2][A-C]).

National Register of Historic Places

The NRHP was established by the National Historic Preservation Act of 1966 as “an authoritative guide to be used by federal, State, and local governments, private groups and citizens to identify the Nation’s cultural resources and indicate what properties should be considered for protection from destruction or impairment” (36 CFR 60.2). The NRHP recognizes properties that are significant at the federal, state, and local levels. To be eligible for listing in the NRHP, a resource must be significant in American history, architecture, archaeology, engineering, or culture. Districts, sites, buildings, structures, and objects of potential significance must also possess integrity of location, design, setting, materials, workmanship, feeling, and association. A property is eligible for the NRHP if it meets one or more of the following criteria:

Criterion A Is associated with events that have made a significant contribution to the broad patterns of our history;

Criterion B Is associated with the lives of persons significant in our past;

Criterion C Embodies the distinctive characteristics of a type, period, or method of installation, or that represents the work of a master, or that possesses high artistic values, or that represents a significant and distinguishable entity whose components may lack individual distinction;

Criterion D Has yielded, or may be likely to yield, information important in prehistory or history.

In addition to meeting at least one of the above designation criteria, resources must also retain integrity, or enough of their historic character or appearance to be "recognizable as historical resources and to convey the reasons for their significance" (California Office of Historic Preservation 2002). The National Park Service (NPS) recognizes seven aspects or qualities that, considered together, define historic integrity. To retain integrity, a property must possess several, if not all, of these seven qualities, defined in the following manner (NPS 1995):

1) **Location.** The place where the historic property was constructed or the place where the historic event occurred;
2) **Design.** The combination of elements that create the form, plan, space, structure, and style of a property;
3) **Setting.** The physical environment of a historic property;
4) **Materials.** The physical elements that were combined or deposited during a particular period of time and in a particular pattern or configuration to form a historic property;
5) **Workmanship.** The physical evidence of the crafts of a particular culture or people during any given period in history or prehistory;
6) **Feeling.** The property's expression of the aesthetic or historic sense of a particular period of time; and/or
7) **Association.** The direct link between an important historic event or person and a historic property.

California Register of Historical Resources

The CRHR was created by Assembly Bill 2881, which was passed in 1992. The CRHR is an authoritative listing and guide to be used by State and local agencies, private groups, and citizens in identifying the existing historical resources of the state and to indicate which resources deserve to be protected, to the extent prudent and feasible, from substantial adverse change (PRC Section 5024.1[a]). The criteria for eligibility for the CRHR are consistent with the NRHP criteria but have been modified for state use in order to include a range of historical resources that better reflect the history of California (PRC Section 5024.1[b]). Certain properties are determined by the statute to be automatically included in the CRHR by law, including California properties formally determined eligible for, or listed in, the NRHP (PRC Section 5024.1[d]).

Properties are eligible for listing in the CRHR if they meet one or more of the following criteria:

Criterion 1 Is associated with events that have made a significant contribution to the broad patterns of California's history and cultural heritage

Criterion 2 Is associated with the lives of persons important in our past

Criterion 3 Embodies the distinctive characteristics of a type, period, region, or method of construction, or represents the work of an important creative individual, or possesses high artistic values

Criterion 4 Has yielded, or may be likely to yield, information important in prehistory or history

In addition, PRC Section 21083.2(a) states that if a lead agency determines a project may have a significant effect on unique archaeological resources, the environmental impact report shall address impacts to these resources. PRC Section 21083.2(g) defines a unique archaeological resource as an artifact, object, or site about which it can be clearly demonstrated that, without merely adding to the current body of knowledge, there is a high probability that it meets any of the following criteria:

Criterion 1 Contains information needed to answer important scientific research questions and that there is a demonstrable public interest in that information

Criterion 2 Has a special and particular quality such as being the oldest of its type or the best available example of its type

Criterion 3 Is directly associated with a scientifically recognized important prehistoric or historic event or person

If it can be demonstrated that a project will cause damage to a unique archaeological resource, the lead agency may require reasonable efforts be made to permit any or all of these resources to be preserved in place or left in an undisturbed state. To the extent that resources cannot be left undisturbed, mitigation measures are required (PRC Section 21083.2[a-b]).

3 Natural and Cultural Setting

3.1 Environmental Setting

Located at 1061 South Orange Avenue in Monterey Park, Los Angeles County, California, the subject property is owned by Metropolitan and developed with Garvey Reservoir in addition to a variety of associated structures and facilities. The property is depicted on Township 01 South, Range 12 West, Sections 26, 27, 34 and 35 of the United States Geological Survey (USGS) *El Monte* 7.5-minute quadrangle. It is surrounded primarily by suburban residential development, although the Monterey Park City Yard and Garvey Ranch Park border it to the north.

3.2 Prehistoric Setting

During the 20th century, many archaeologists developed chronological sequences to explain prehistoric cultural changes within all or portions of southern California (e.g., Jones and Klar 2005 and Moratto 1984). Wallace (1955 and 1978) devised a prehistoric chronology for the southern California coastal region that included four horizons: Early Man, Milling Stone, Intermediate, and Late Prehistoric. Wallace based his chronology on early studies that lacked the chronological precision of absolute dates (Moratto 1984). Since then, Wallace's (1955) synthesis has been modified and improved using thousands of radiocarbon dates obtained by southern California researchers over recent decades (Byrd and Raab 2007; Koerper and Drover 1983; Koerper et al. 2002; Mason and Peterson 1994). The prehistoric chronological sequence for southern California presented below is a composite based on Wallace (1955) and Warren (1968) as well as later studies, including Koerper and Drover (1983).

Early Man Horizon (circa 10,000 to 6000 BCE)

Numerous pre-8000 Before Common Era (BCE) sites have been identified along the mainland coast and Channel Islands of southern California (c.f., Erlandson 1991; Johnson et al. 2002; Jones and Klar 2007; Moratto 1984; Rick et al. 2001). One of them, the Arlington Springs site on Santa Rosa Island, produced human remains dating to approximately 13,000 years ago (Arnold et al. 2004; Johnson et al. 2002). On San Miguel Island, human occupation at Daisy Cave (SMI-261) has also been dated to nearly 13,000 years ago. Some of the earliest examples of basketry on the Pacific Coast, dating to over 12,000 years old, were found at the Daisy Cave site (Arnold et al. 2004).

Although few Clovis or Folsom style fluted points have been found in southern California (e.g., Dillon 2002; Erlandson et al. 1987), Early Man Horizon sites are generally associated with a greater emphasis on hunting than later horizons. Recent data indicate that the Early Man economy was a diverse mixture of hunting and gathering, including a significant focus on aquatic resources in coastal areas (e.g., Jones et al. 2002) and on inland Pleistocene lake shores (Moratto 1984). A warm and dry 3,000-year period called the Altithermal began around 6000 BCE. The conditions of the Altithermal are likely responsible for the change in human subsistence patterns at this time, including a greater emphasis on plant foods and small game.

Milling Stone Horizon (6000 to 3000 BCE)

Wallace (1955) defined the Milling Stone Horizon as "marked by extensive use of milling stones and mullers, a general lack of well-made projectile points, and burials with rock cairns." The predominance of such artifact types indicates a subsistence strategy oriented around collecting plant foods and small animals. A broad spectrum of food resources, including small and large terrestrial mammals, sea mammals, birds, shellfish and other littoral and estuarine species, near-shore fishes, and seeds and other plant products, was consumed (Kowta 1969; Reinman 1964). Variability in artifact assemblages over time and between coastal and inland sites indicates that Milling Stone Horizon subsistence strategies adapted to environmental conditions (Jones 1996; Byrd and Raab 2007). Locally available tool stone dominates lithic artifact assemblages associated with Milling Stone Horizon sites. Chopping, scraping, and cutting tools are very common along with ground stone tools, such as manos and metates. The mortar and pestle, associated with acorns or other foods processed through pounding, were first used during the Milling Stone Horizon, and increased dramatically in later periods (Wallace 1955 and 1978; Warren 1968).

Two types of artifacts considered diagnostic of the Milling Stone Horizon are the cogged stone and discoidal, most of which have been found in sites dating between 4000 and 1000 BCE (Moratto 1984), though possibly as far back as 5500 BCE (Couch et al. 2009). The cogged stone is a ground stone object with gear-like teeth on the perimeter produced from a variety of materials. The function of cogged stones is unknown, although ritualistic or ceremonial uses have been postulated (Eberhart 1961). Discoidals, although similar to cogged stones, are found in the archaeological record subsequent to the introduction of the cogged stone. Cogged stones and discoidals were often purposefully buried, or "cached." Cogged stones have been collected in Los Angeles County, although their distribution appears to center on the Santa Ana River basin (Eberhart 1961).

Intermediate Horizon (3000 BCE to 500 CE)

Wallace's Intermediate Horizon dates from approximately 3000 BCE to 500 Common Era (CE) and is characterized by a shift toward a hunting and maritime subsistence strategy as well as greater use of plant foods. A noticeable trend towards a greater adaptation to local resources including a broad variety of fish, land mammals, and sea mammals along the coast occurred during the Intermediate Horizon. Tool kits for hunting, fishing, and processing food and materials reflect this increased diversity with flake scrapers, drills, various projectile points, and shell fishhooks being manufactured.

Mortars and pestles became more common during this transitional period, gradually replacing manos and metates as the dominant milling equipment. This change in milling stone technology is believed to signal a transition from the processing and consumption of hard seed resources to the increased reliance on acorns (Glassow et al. 1988; True 1993). Mortuary practices during the Intermediate Horizon typically included fully flexed burials oriented toward the west (Warren 1968).

Late Prehistoric Horizon (500 CE–Historic Contact)

During Wallace's (1955 and 1978) Late Prehistoric Horizon, the diversity of plant food resources and land and sea mammal hunting increased even further than during the Intermediate Horizon. A greater variety of artifact types was observed during this period and high-quality exotic lithic materials were used for small, finely worked projectile points associated with the bow and arrow. Steatite containers were made for cooking and storage, and an increased use of asphaltum for waterproofing is noted. More artistic artifacts were recovered from Late Prehistoric Horizon sites,

and cremation became a common mortuary custom. Larger, more permanent villages supported an increased population size and social structure (Wallace 1955). This change in subsistence focus, material culture, and burial practices coincides with the westward migration of Uto-Aztecan language speakers from the Great Basin region to Los Angeles, Orange, and western Riverside counties (Sutton 2008; Potter and White 2009).

3.3 Ethnographic Context

Gabrielino – Tongva

The project site is located within the traditional territory of the Native American group known as the Gabrielino. The name Gabrielino was applied by the Spanish to those natives that were attached to Mission San Gabriel (Bean and Smith 1978). Today, most contemporary Gabrielino prefer to identify themselves as Tongva, a term that will be used throughout the remainder of this section (King 1994).

Tongva territory included the Los Angeles basin and southern Channel Islands as well as the coast from Aliso Creek in the south to Topanga Creek in the north. Their territory encompassed several biotic zones, including Coastal Marsh, Coastal Strand, Prairie, Chaparral, Oak Woodland, and Pine Forest (Bean and Smith 1978).

The Tongva language belongs to the Takic branch of the Uto-Aztecan language family, which can be traced to the Great Basin region (Mithun 2004). This language family includes dialects spoken by the nearby Juaneño and Luiseño but is considerably different from those of the Chumash people living to the north and the Diegueño (including Ipai, Tipai, and Kumeyaay) people living to the south.

Tongva society was organized along patrilineal non-localized clans, a common Takic pattern. Each clan had a ceremonial leader and contained several lineages. The Tongva established large permanent villages and smaller satellite camps throughout their territory. Recent ethnohistoric work suggests a total tribal population of nearly 10,000, considerably more than earlier estimates of around 5,000 people (O'Neil 2002; Bean and Smith 1978).

Tongva subsistence was oriented around acorns supplemented by the roots, leaves, seeds, and fruits of a wide variety of plants. Meat sources included large and small mammals, freshwater and saltwater fish, shellfish, birds, reptiles, and insects. (Bean and Smith 1978; Langenwalter et al. 2001; Kroeber 1925; McCawley 1996). The Tongva employed a wide variety of tools and implements to gather and hunt food. The digging stick, used to extract roots and tubers, was frequently noted by early European explorers (Rawls 1984). Other tools included the bow and arrow, traps, nets, blinds, throwing sticks and slings, spears, harpoons, and hooks. Like the Chumash, the Tongva made oceangoing plank canoes (known as a ti'at) capable of holding six to 14 people and used for fishing, travel, and trade between the mainland and the Channel Islands. Tule reed canoes were employed for near-shore fishing (Blackburn 1963; McCawley 1996).

Chinigchinich, the last in a series of heroic mythological figures, was central to Tongva religious life at the time of Spanish contact (Kroeber 1925). The belief in Chinigchinich was spreading south among other Takic-speaking groups at the same time the Spanish were establishing Christian missions. Elements of Chinigchinich beliefs suggest it was a syncretic mixture of Christianity and native religious practices (McCawley 1996).

Prior to European contact, deceased Tongva were either buried or cremated, with burial more common on the Channel Islands and the adjacent mainland coast and cremation on the remainder

of the coast and in the interior (Harrington 1942; McCawley 1996). After pressure from Spanish missionaries, cremation essentially ceased during the post-contact period (McCawley 1996).

3.4 History

Post-European contact history for the state of California is generally divided into three periods: the Spanish Period (1769 to 1822), the Mexican Period (1822 to 1848), and the American Period (1848 to present). Each of these periods is briefly described below, along with a brief history of Monterey Park and of Metropolitan.

Spanish Period (1769 to 1822)

Spanish exploration of California began when Juan Rodríguez Cabrillo led the first European expedition into the region in 1542. During this expedition, he anchored in Malibu Lagoon and named the area Pueblo de las Canoas for the Chumash canoes. For more than 200 years after his initial expedition, Spanish, Portuguese, British, and Russian explorers sailed the California coast and made limited inland expeditions, but they did not establish permanent settlements (Bean 1968; Rolle 2003). In 1769, Gaspar de Portolá and Franciscan Father Junípero Serra established the first Spanish settlement at Mission San Diego de Alcalá. This was the first of 21 missions erected by the Spanish between 1769 and 1823 in what was then known as Alta (upper) California. Mission San Gabriel Arcángel was founded in 1771. It was during this time that initial Spanish settlement of the project site vicinity began.

Mexican Period (1822 to 1848)

The Mexican Period commenced when news of the success of the Mexican Revolution (1810 to 1821) against the Spanish crown reached California in 1822. This period saw the privatization of mission lands in California with the passage of the Secularization Act of 1833. This Act enabled Mexican governors in California to distribute mission lands to individuals in the form of land grants. Successive Mexican governors made more than 700 land grants between 1822 and 1846, putting most of the state's lands into private ownership for the first time (Shumway 2007). About 45 land grants (ranchos) were located in Los Angeles County; of these, Rancho La Merced encompassed the project site vicinity.

The Mexican Period for Los Angeles County and adjacent areas ended in early January 1847. Mexican forces fought combined United States Army and Navy forces in the Battle of the San Gabriel River on January 8, 1847, and in the Battle of La Mesa on January 9, 1847 (Nevin 1978). American victory in both battles confirmed the capture of Los Angeles by American forces (Rolle 2003). On January 10, 1847, leaders of the Pueblo de Los Ángeles surrendered peacefully after Mexican General José María Flores withdrew his forces. Shortly thereafter, newly appointed Mexican Military Commander of California Andrés Pico surrendered all of Alta California to United States Army Lieutenant Colonel John C. Fremont in the Treaty of Cahuenga (Nevin 1978).

American Period (1848 to Present)

The Mexican Period officially ended statewide in early January 1848 with the signing of the Treaty of Guadalupe Hidalgo, formally concluding the Mexican-American War. Per the treaty, the United States agreed to pay Mexico $15 million for conquered territory, including California, Nevada, Utah, and parts of Colorado, Arizona, New Mexico, and Wyoming. California gained statehood in 1850, and this political shift set in motion a variety of factors that began to erode the rancho system.

In 1848, the discovery of gold in northern California led to the California Gold Rush, though gold was found in 1842 in San Francisquito, about 35 miles northwest of Los Angeles (Workman 1935; Guinn 1976). By 1853, the population of California exceeded 300,000. Horticulture and livestock, based primarily on cattle as the currency and staple of the rancho system, continued to dominate the southern California economy through the 1850s. However, a severe drought in the 1860s decimated cattle herds and drastically affected rancheros' source of income. Thousands of settlers and immigrants continued to pour into the state, particularly after the completion of the transcontinental railroad in 1869. Property boundaries loosely established during the Mexican era led to disputes with new incoming settlers, problems with squatters, and lawsuits. The initiation of property taxes proved onerous for many southern California ranchers, given the size of their holdings. Rancheros were often encumbered by debt and the cost of legal fees to defend their property. As a result, much of the rancho lands were sold or otherwise acquired by Americans. Most of these ranchos were subdivided into agricultural parcels or towns (Dumke 1944).

In the 1880s, a dramatic boom fueled by various factors including increasingly accessible rail travel, agricultural development and improved shipment methods, and favorable advertisement occurred in southern California (Dumke 1994). In 1883, the California Immigration Commission designed an advertisement declaring the state as "the Cornucopia of the World" (Poole 2002:36). New southern Californian towns were promoted as havens for good health and economic opportunity.

City of Monterey Park

Circa 1840, Spanish rancher Jose Lugo built the first adobe home in the vicinity of present-day Monterey Park near the current South Garfield Avenue. Following this time, Richard Garvey, a mail rider for the United States Army whose route took him through Monterey Pass (now Garvey Avenue), settled in the King's Hills. Garvey began subdividing his property, selling the parcels to pay his debts. To support development, he transported spring water from the Hondo River and constructed a 54-foot-high dam to form Garvey Lake, which was historically located within current-day Garvey Ranch Park. In 1906, the area's first subdivision, Ramona Acres, was developed north of Garvey Avenue and east of Garfield Avenue in an area that was historically primarily agricultural (*Los Angeles Times* 1995; Monterey Park n.d.).

In 1916, residents in the area moved to incorporate in reaction to a proposal by the cities of Pasadena, South Pasadena and Alhambra to build a sewage treatment facility in the vicinity. The community voted to incorporate itself as Monterey Park, after the nearby Monterey Hills, on May 29, 1916, and the newfound City's Board of Directors promptly outlawed sewage treatment plants within the city limits. Real estate became a thriving industry during the 1920s, and the area's population grew with subdivisions and commercial properties. Although development slowed during the depression era, the post-World War II period saw revived development, particularly in the central portion of the city that was previously undeveloped. A series of annexations of surrounding acreage also occurred during this period (*Los Angeles Times* 1995; Monterey Park n.d.). Since that time, the city has continued to densify, and in 2019, the population was estimated at 59,669 (United States Census Bureau 2019).

Metropolitan Water District

In 1928, Metropolitan was established by the California State Legislature through the Metropolitan Water District Act. Metropolitan's first Board of Directors represented the cities of Anaheim, Beverly Hills, Burbank, Colton, Glendale, Los Angeles, Pasadena, San Bernardino, San Marino, Santa Ana, and Santa Monica (AECOM 2015). In July of 1929, F.E. Weymouth assumed the dual role of general

manager and chief engineer of Metropolitan, and by the end of the year, Metropolitan's service area covered 600 square miles. In April 1930, under Weymouth's leadership, Metropolitan and the United States Department of the Interior entered a contract for the delivery of water to Metropolitan, and the following year Metropolitan assumed management of the engineering of the Colorado River Aqueduct (CRA; AECOM 2015).

To enable construction of the CRA, Metropolitan helped forge landmark federal agreements that divided up the Colorado River water supply and led to the creation of Hoover Dam. Voters overwhelmingly approved a $220 million Depression-era bond that provided jobs to 35,000 workers. As part of the CRA, Metropolitan constructed 242 miles of canals, siphons, conduit, and pipelines; five pumping plants; and over 90 miles of tunnels, including a waterway under Mount Jacinto. On June 17, 1941, a valve was turned on at the new F.E. Weymouth Water Softening Plant, and for the first time, water flowed from the Colorado River to the city of Pasadena. By the end of July, water would flow to Beverly Hills, Burbank, Compton, and Santa Monica; water service to Orange County would soon follow (Metropolitan n.d.)

The mid-20th century was a time of marked expansion for the Los Angeles region and, in turn, for Metropolitan. Population growth in conjunction with an extended drought in California led to an increased demand for water (*Los Angeles Times* 1953). During this period, numerous infrastructure projects that further facilitated growth of the region were initiated as Metropolitan expanded the CRA. One such project was the construction of Garvey Reservoir, which is situated on a hilly area in Monterey Park.

The construction of Garvey Reservoir was part of a larger Metropolitan project that was estimated at a cost of $80 million and was a component of Metropolitan's mid-20th century expansion of the CRA. In 1952, the Metropolitan Board of Directors voted to pass a $200 million bond issue to expand the CRA. In addition to Garvey Reservoir, the expansion included construction of four pumps with associated delivery lines, the "second barrel" siphons, the Cajalco Reservoir dam in Corona, an additional 230-kilovolt power line from Hoover Dam to the Camino switching station, and a treatment facility near Yorba Linda. The F.E. Weymouth Water Softening Plant was doubled in size during this period (Gruen 1998).

Metropolitan continued to expand its footprint throughout the second half of the 20th century. In 1959, the California State Legislature approved the Burnes-Porter Act, which ultimately led to the State Water Project on which Metropolitan was the largest contractor. By the early 1960s, Metropolitan had forged agreements with the San Diego County Water Authority, Pomona Water District, and several local authorities to manage their water supplies. By 1965, the number of public agencies that had joined Metropolitan increased to 26, and Metropolitan's service area covered more than 4,500 miles (AECOM 2015). Presently, Metropolitan operates the CRA, sixteen hydroelectric facilities, nine reservoirs, and five water treatment plants. Metropolitan currently delivers water from the Colorado River and northern California to roughly 19 million customers in southern California (Metropolitan n.d.).

4 Background Research

4.1 Cultural Resources Records Search

On September 23, 2021, a CHRIS search was requested from the South Central Coastal Information Center at California State University, Fullerton. The purpose of the CHRIS search is to identify previously conducted cultural resources studies and previously recorded cultural resources at the project site and within a 0.25-mile buffer surrounding it so that the cultural sensitivity of the area may be assessed. The results of the CHRIS search were received on November 29, 2021. The search results did not identify any prehistoric resources within the subject property or within a 0.25-mile buffer. One previously recorded historic-period resource (P-19-190175), a transmission tower that was recorded, evaluated, and recommended ineligible for historic designation, was identified by the search.

As part of the background research effort, Rincon also reviewed the NRHP, CRHR, lists of the California Historical Landmarks and Points of Interest, the Built Environment Resources Directory, and the Archaeological Determination of Eligibility list. Review of these inventories did not identify any known cultural resources within the project site or immediate vicinity that have the potential to be impacted by the project. The presence of the Monterey Park Historical Museum, which includes Garvey Ranch House, on a property immediately north of Garvey Reservoir was identified by this effort. Garvey Ranch House is a historic-period residence associated with area pioneer Richard Garvey. It appears a group of citizens attempted to nominate the property for inclusion in the CRHR in 2009; however, the property is not currently listed in the CRHR or any other inventory of historical resources. Given its physical relationship to the reservoir and the nature of the proposed project activities, the project does not have the potential to impact the Garvey Ranch House. Therefore, it is not discussed further in this report.

4.2 Archival and Background Research

Archival research was completed throughout September and October 2021 and focused on the review of a variety of primary and secondary source materials relating to the history and development of the project site and its surroundings. Sources included, but were not limited to, historical maps and aerial photographs, contemporary newspaper articles, and written histories of the area. The following is a list of sources consulted during research pertaining to the subject property.

- Historical aerial photographs accessed digitally via Nationwide Environmental Title Research (NETR) Online, Inc. and the University of California, Santa Barbara Map and Imagery Lab
- Historical topographic maps accessed digitally via USGS
- Historical maps accessed digitally via the Los Angeles Public Library
- Historical newspaper articles accessed digitally via newspapers.com
- Archival documents provided by Metropolitan
- Additional sources as indicated in Section 7, *References*

4.3 Sacred Lands File Search

Rincon contacted the NAHC on September 23, 2021, to request a search of the SLF. A response from the NAHC was received on October 25, 2021, stating that the results of the SLF search were positive, meaning tribal heritage resources are noted in the project site vicinity (Appendix B). However, SLF searches are conducted by USGS quadrangle map, each of which covers an approximately 50- to 70-square-mile area, and the NAHC does not provide the specific location of tribal heritage resources. Therefore, a positive SLF search alone does not necessarily indicate the presence of tribal heritage resources within the immediate vicinity of the project site.

4.4 Field Survey

On October 12, 2021, Rincon Archaeologist Kyle Montgomery conducted a pedestrian field survey of the project site to identify archaeological and built environment resources. All areas of the project site that were accessible were subject to an intensive pedestrian survey. A reconnaissance survey via monocular was performed on any areas that were inaccessible due to steep slopes. Mr. Montgomery utilized parallel transects spaced approximately 10 to 15 meters apart in open space areas. Areas of exposed ground were inspected for prehistoric artifacts (e.g., flaked stone tools, tool-making debris, ground stone milling tools), ecofacts (marine shell and bone), soil discoloration that might indicate the presence of a cultural midden, and features that might suggest the potential for former structures or buildings (e.g., standing exterior walls, foundations) or historic debris (e.g., metal, glass, ceramics). Ground disturbances such as burrows and drainages were also visually inspected.

Under the direction of Rincon Architectural Historian Rachel Perzel, Mr. Montgomery visually inspected all buildings, structures, and landscaped features located within and immediately adjacent to the project site, documenting their style, method of construction, and physical condition in detailed notes and digital photographs.

5 Results

As a result of the background research and field survey, one property containing historic-period built environment features – the Garvey Reservoir property - was identified. The property was recorded on California Department of Parks and Recreation 523 Series forms (DPR forms) and evaluated for listing in the NRHP and the CRHR. DPR forms for the property can be found in Appendix C of this report and are summarized in the following sections.

5.1 Garvey Reservoir Property

Physical Description

The subject property is a roughly 142-acre, irregularly-shaped property developed with Garvey Reservoir and a variety of appurtenant structures and features. The property is surrounded by chain link fencing and includes mature landscaping throughout. Its various structures and features include the following, which are further detailed in the following subsections and identified in Figure 2 in Section 1.2, *Project Description*.

- Garvey Reservoir and I/O tower
- Developed area southeast of reservoir (including Junction Structure, Administration Building/ Water Quality Laboratory, standby generator enclosure, and Sodium Hypochlorite Tank Farm)
- Communications site (including three towers, one permanent building, and several temporary, modular buildings)
- Surge tank
- Construction trailer staging area
- Construction staging area

Reservoir and I/O Tower

Original to the property's development, the open, concrete-lined Garvey Reservoir (Figure 3Figure 3, Photograph 1) is sited centrally within the subject property on top of a hill surrounded by concrete v-ditches and earthen embankments. It is roughly triangular in shape with rounded corners and is surrounded by a paved access road. In the eastern portion of the reservoir, it features an I/O tower (Figure 3, Photograph 2), which controls the reservoir's water flow by the operation of gates at various elevations. The concrete I/O tower features a circular plan, narrow multi-light steel-framed windows, and a flat roof. The Modern-influenced structure exhibits minimal architectural detailing and is accessible via a metal access bridge that features affixed light fixtures that appear original. It contains a variety of operational equipment (electrical equipment, valves, pumps, etc.) which also appear original to its design.

Developed Area Southeast of Reservoir

In the southeastern portion of the property is a paved, developed area that includes the Junction Structure, Administration Building/Water Quality Laboratory, standby generator enclosure, and Sodium Hypochlorite Tank Farm, each of which is described individually below.

JUNCTION STRUCTURE

Original to the property's development and located adjacent to South Orange Avenue, the utilitarian, partially-subterranean Junction Structure (Figure 3, Photograph 3) contains a variety of valves and other equipment essential to the property's water distribution function. The above-grade portion of the structure features a rectangular footprint, concrete walls with narrow metal-framed hopper windows, and a flat roof. It contains the structure's pedestrian entry, which consists of a single metal door, on the north elevation. The Modern-influenced structure features minimal architectural detailing limited to simple incising on exterior walls. On the interior, the above grade portion of the structure contains a stairway that leads to a below grade area where valves and associated equipment are housed.

ADMINISTRATION BUILDING/WATER QUALITY LABORATORY

Located approximately 50 feet west of the Junction Structure is a single-story building that functions as the property's Administration Building and Water Quality Laboratory (Figure 3, Photograph 4). This building was originally the reservoir's chlorination building and does not embody a particular architectural style. Administrative functions are housed in the eastern portion of the building, and the Water Quality Laboratory is located in the western portion. Indicative of their construction at separate times, the Administration Building (circa 1952) and Water Quality Laboratory (circa 1976) portions of the building vary in height. The utilitarian, roughly T-planned building is constructed of concrete block and features a flat roof. An abundance of window and door types are featured. Window units vary throughout and include metal-framed casement and hopper windows, which appear original, and aluminum sliders, which appear to be replacements. Wood and metal doors are both present. The building's north elevation features a former bay door opening that has been enclosed to contain a single door and window surrounded with wood siding.

To the west of the Administration Building/Water Quality Laboratory is a simple structure formerly used to contain hazardous materials ("former caustic soda structure"; Figure 4, Photograph 1). The square-planned structure is a few feet in height and is unroofed. It is constructed of concrete block and features a large, concrete-formed circular-planned pit at center.

STANDBY GENERATOR ENCLOSURE

Added to the property in 1974, the property's standby generator enclosure (historically known as the emergency generator building; Figure 4**Error! Reference source not found.**, Photograph 2) is located approximately 30 feet west of the Administration Building/Water Quality Laboratory. The small utilitarian building, which houses the property's backup generator, is consistent in design with the Administration Building/Water Quality Laboratory as previously described and does not embody a particular architectural style. The rectangular planned building is constructed of concrete block and features a flat roof. It is largely void of fenestration but is lined with slotted doors on the east elevation. Immediately to the north of this standby generator enclosure is an open-air structure that consists of a concrete slab sheltered by a metal framed and clad roof and contains a large fuel tank.

Figure 3 Site Photographs of Reservoir, I/O Tower, Junction Structure, and Adminstration Building/Water Quality Laboratory

Photograph 1. Garvey Reservoir

Photograph 2. I/O Tower

Photograph 3. Junction Structure

Photograph 4. Administration Building and Water Quality Laboratory

Figure 4 Site Photographs of Former Caustic Soda Structure, Backup Generator Enclosure, Sodium Hypoclorite Tank Farm, and Construction Staging Area

Photograph 1. Former Caustic Soda Structure

Photograph 2. Backup Generator Enclosure

Photograph 3. Sodium Hypochlorite Tank Farm

Photograph 4. Construction Staging Area

SODIUM HYPOCHLORITE TANK FARM

Constructed between 1996 and 1998 and located approximately 40 feet north of the Administration Building/Water Quality Laboratory is the property's Sodium Hypochlorite Tank Farm (Figure 4, Photograph 3). The tank farm structure is partially open air. It consists of a concrete slab on which a variety of equipment is mounted. The walls are steel-framed; the top half of walls are clad with metal panels while the bottom portions are open-air and surrounded with simple metal pipe railings. Similarly, a large portion of the structure is unroofed on its eastern side. Awnings extend from the building to shelter electrical equipment.

Staging Areas

There are two staging areas located adjacent to the reservoir, a construction staging area at the north (Figure 4**Error! Reference source not found.**, Photograph 4) and a construction trailer staging area at the south (Figure 5, Photograph 1). The construction staging area features hard-packed gravel ground and does not include any built environment features. The construction trailer staging area is accessible via a paved drive and includes a paved area within which a temporary structure (double-wide construction trailer and associated shade structure) is sited. Surrounding the construction trailer staging area is a grassy, artificially-flattened area that is partially surrounded with concrete retaining walls and a variety of mature plantings. This area was formerly developed with three small residences that were demolished between July 2008 and June 2009 (Google Earth 2021). Two sets of concrete steps and associated light standards remain.

Surge Tank

The 1,000-gallon, metal surge tank is sited on a concrete slab approximately 60 feet southeast of the reservoir (Figure 5, Photograph 2). Several metal pipes extend from the prefabricated tank in various directions into the ground as well as into adjacent associated features such as pumps and a pressure switch. Adjacent to the tank is a temporary metal storage container that contains emergency response equipment.

Communications Site

Located approximately 550 feet east of the surge tank is a paved area that functions as a communications site. The site includes three steel towers of various form and height on which a variety of antennas and dishes are mounted (Figure 5, Photograph 3). Two utilitarian modular buildings and one concrete constructed building that house communications equipment surround the towers (Figure 5, Photograph 4), which were constructed between 1956 and 1960. Also located in this area are various associated equipment such as oil/gas tanks and a large generator.

Property History and Construction Chronology

A review of historical aerial images reveals that, although the surrounding region was largely developed with residential suburbs by the early 1950s, the hilly are area immediately surrounding and comprising the subject property remained undeveloped as of early 1952 (NETR Online, Inc. var.). The subject property is situated within what was historically Garvey Ranch, a property associated with Monterey Park's early development. In 1950, Garvey Ranch was sold to the Inglewood Park Cemetery Association for development of a cemetery (Metropolitan 1954). However, the association could not secure a zoning variance to use the land for a cemetery, and the City eventually turned to other land use alternatives for the property. In 1950, the property was sold

Figure 5 Site Photographs of Construction Trailer Staging Area, Surge Tank, and Communications Site

Photograph 1. Construction Trailer Staging Area

Photograph 2. Surge Tank

Photograph 3. Communications Site

Photograph 4. Building at Communications Site

to Metropolitan for $72,900 and developed into Garvey Reservoir as part of its ongoing expansion of the CRA under general manager and chief engineer, Robert B. Diemer and assistant chief engineer, R.A. Skinner (Metropolitan 1954).

As described in Metropolitan's *Historical Record Garvey Reservoir,* the purpose of Garvey Reservoir was to "provide storage of the off-peak flow to meet the peak demand of the areas served by the Middle Feeder and the cross connections to the Palos Verdes and Lower Feeder systems." Garvey Reservoir would "furnish a two-day supply to the eastern and southern portions of Los Angeles County as well as supplement the supply in the Orange County reservoir and serve the constituents in Orange County" (Metropolitan 1954).

Bids for construction of the reservoir began September 8, 1952, and a joint venture between Morrison-Knudsen Co., Inc. and R.A. Westbrook (referred to jointly in historical documents as Morrison-Knudsen Co., Inc. and R.A. Westbrook) won the bid at $3,143,694.50 (Metropolitan 1954). Morrison-Knudsen Co. was founded in 1912 and went on to contribute to several notable infrastructure projects in the United States throughout the 20th century; including the New York Canal, the Hoover Dam, the San Francisco Bay Bridge, and Penn Station, among others (MK Foundation 2021). The research conducted for this study failed to identify consequential information related to R.A. Westbrook. At the time of Garvey Reservoir's construction, Morrison-Knudsen Co. and R.A Westbrook's president and vice president/general manager were H.W. Morrison and J.B. Bonney, respectively; field personnel included R.A. Westbrook, general manager, D. Westbrook, superintendent, and D. Hoyt, foreman. In addition to Morrison-Knudsen Co., Inc. and R.A. Westbrook, Garvey Reservoir was constructed with the assistance of the following subcontractors: United Concrete Pipe Corporation, Southwest Welding and Manufacturing Co., the ABC Construction Co., W.E. Hall Construction Co., Lefever and Bing, Los Angeles Fence Co., Ets. Hockin & Galvin, E.R. Larson & Co., Fontana Steel Co., Pacific Iron and Steel Corp., Hunt Process Co., House of Murphy, Golden State Sandblasting Co., Armco Drainage, and Metal Products, Inc.

Construction of Garvey Reservoir began on October 21, 1952, and was completed on October 11, 1954, a reported six months ahead of schedule. Work at the site included "excavation, rolled fill embankment, asphaltic concrete lining and roads, and the construction of inlet and outlet pipes, outlet tower, pipe gallery, feeder pipelines, control structure, venturi meter structures, spillway, drains, steel footbridge, roads, fences, electrical facilities and appurtenant works" (Metropolitan 1954). An aerial image of the property dated 1956 depicts the reservoir in its initial development (Figure 6). In that image, the reservoir and I/O tower and surrounding concrete v-ditches and earthen embankments appear generally consistent with the property's current conditions. At that time, there were three caretaker residences, which were demolished circa 2008, located south of the reservoir in the current construction trailer staging area. Also visible in the 1956 aerial photograph is the developed area southeast of the reservoir; at that time, the Junction Structure and current Water Quality Laboratory (originally a chlorination building with small integrated Water Quality Laboratory) appear extant. Also extant at that time are what appear to be two small buildings located north of the Junction Structure and current Water Quality Laboratory, which no longer remain.

A review of historical aerial images and archival documents provided by Metropolitan provides the construction chronology for the property outlined in Table 1.

Figure 6 Garvey Reservoir in 1964

Table 1 Construction Chronology

Dates	Notable Events
1952-1954	Reservoir, I/O tower, current Water Quality Laboratory (original chlorination building/Water Quality Laboratory), and Junction Structure are constructed. Several buildings no longer extant (at least three small buildings used as caretakers' residences and what appear to be two buildings in developed area southeast of reservoir) are also constructed.
1956-1960	Utilitarian concrete building located within the current communication tower site is constructed.
1960s-1970s	Additions/Alterations to the chemical feed and electrical system and distribution system resulting from an effort to implement centralized controls are made (Metropolitan 2021).
1974	Standby generator enclosure (currently referred to as the backup generator enclosure) is constructed.
1976	Current Administration Building is added to existing chlorination building/Water Quality Laboratory.
1983	Floating reservoir cover is installed (Metropolitan 2021).
Post 1976	Communications site is further developed with towers and modular buildings; developed area southeast of reservoir is further developed with additional buildings. Sodium Hypochlorite Tank Farm is constructed between 1996 and 1998.
1989-1999	Cracks in reservoir bottom are repaired. Reservoir bottom liner, geo-textile cushion, automatic sensing and remote recording piezometers, new floating cover, and polypropylene liner on top of the drainage layer are installed. Leak detection and monitoring system is upgraded, and reservoir is connected to seepage alarm (Metropolitan 2021).

Dates	Notable Events
1999	Reservoir liner is replaced with a multi-layer Hypalon. Extensive seismic and seepage monitoring system is installed.
2008-2009	Former caretakers' residences are demolished.

Historical Evaluation

As detailed in the subsequent discussion, the subject property is recommended ineligible for listing in the NRHP and CRHR under any significance criteria (A/1, B/2, C/3, D/4).

Water conveyance-related properties are generally eligible under NRHP Criterion A/CRHR Criterion 1 if they are associated with specific important events (e.g., first long-distance transmission of hydroelectric power) or an important pattern of events (e.g., development of irrigated farming) (JRP Historical Consulting Services and California Department of Transportation 2000). Archival research indicates that Garvey Reservoir is one of several reservoirs constructed as part of Metropolitan's post-World War II expansion of the CRA system to service the rapidly expanding needs of the Los Angeles region. The research conducted for this study did not indicate that Garvey Reservoir is particularly unique or significant within this context; rather, it is an anticipated response to post-World War II growth, similar to many other infrastructural elements in the region. It does not appear to be significant within the context of water conveyance systems or any other event or pattern of events in the history of the county, region, state, or nation. Therefore, the Garvey Reservoir property is recommended ineligible for listing in the NRHP or CRHR under Criterion A/1.

Archival research identified many individuals historically associated with the Garvey Reservoir property, several of whom are listed in the *Property History and Construction Chronology* section above. Because the property has been in operation for 67 years, it is associated with a wide variety of individuals, including those who designed, constructed, and worked at it over the decades. The research conducted for this study did not identify persons associated with the property who are individually significant within a historic context and/or whose association with the property would be exemplary of that individual's productive life. Therefore, the Garvey Reservoir property is recommended ineligible for listing in the NRHP or CRHR under Criterion B/2.

Water conveyance features are generally found eligible under NRHP Criterion C/CRHR Criterion 3 when they are the earliest, sole surviving, largest, or best-preserved example of a particular type of water conveyance system or a property that introduced a design innovation or evolutionary trend in engineering (JRP Historical Consulting Services and California Department of Transportation 2000). The engineering and construction of Garvey Reservoir and its appurtenant features is consistent with other reservoirs throughout the Metropolitan system, many of which remain, and is a relatively late example. Additionally, Garvey Reservoir is of common design, and this study identified no evidence suggesting that this reservoir and its associated features represented any particular engineering achievement at the time of their construction. The facility's other built environment features (e.g., I/O tower, Junction Structure, Administration Building/Water Quality Laboratory) likewise exhibit little architectural distinction. While some of the buildings appear Modern-influenced, none are excellent examples of the style, of which many exist in the region. While the designers of all of the property's features were not in all cases identified, there is nothing apparent in the design of these features to suggest they would be considered an exemplary work of any master. For the reasons summarized above, the Garvey Reservoir property does not embody the distinctive characteristics of a type, period or method of construction, represent the work of a

master, or possess high artistic values. Therefore, the property is recommended ineligible for listing in the NRHP and CRHR under Criterion C/ 3.

Lastly, the research conducted as part of this evaluation identified no information suggesting the Garvey Reservoir has the potential to yield important information in prehistory or history (Criterion D/4).

6 Findings and Conclusions

A search of the CHRIS did not identify the presence of prehistoric resources on the property or within a 0.25-mile buffer. The search identified one historic-period transmission tower that was previously recorded, evaluated, and recommended ineligible for historic designation within the 0.25-mile buffer but outside the Garvey Reservoir property. The SLF search conducted for this study returned positive results. However, positive SLF search results alone do not necessarily indicate the presence of tribal heritage resources in the immediate vicinity of Garvey Reservoir. The archaeological survey conducted for this study was negative for archaeological resources.

The background research and survey conducted for this study confirmed the Garvey Reservoir property includes several built environment features at least 45 years of age. As a result of the current study, the subject property is recommended ineligible for listing in the NRHP and the CRHR and is therefore not considered a historical resource pursuant to Section 15064.5(a) of the CEQA Guidelines.

Based on the findings of the current investigation as summarized above, the potential for impacts to historical or archaeological resources under CEQA is **low.**

Although no known archaeological deposits are expected to be present within the project site, unanticipated discoveries during construction remain a possibility. As standard best management practices, Rincon recommends implementation of the following measures in the unlikely event of an unanticipated discovery during project construction.

6.1 Unanticipated Discovery of Cultural Resources

In the unlikely event cultural resources are encountered during ground-disturbing activities, work in the immediate area should halt and an archaeologist meeting the Secretary of the Interior's Professional Qualifications Standards for archaeology (National Park Service 1983) should be contacted immediately to evaluate the find. If the discovery proves to be eligible for listing in the NRHP or the CRHR, additional work such as data recovery excavation and Native American consultation to treat the find may be warranted.

6.2 Unanticipated Discovery of Human Remains

If human remains are unexpectedly encountered, the State of California Health and Safety Code Section 7050.5 states that no further disturbance shall occur until the County Coroner has made a determination of origin and disposition pursuant to Public Resources Code Section 5097.98. In the unlikely event of an unanticipated discovery of human remains, the County Coroner must be notified immediately. If the human remains are determined to be prehistoric, the Coroner will notify the NAHC, which will determine and notify a most likely descendant (MLD). The MLD has 48 hours from being granted site access to make recommendations for the disposition of the remains. If the MLD does not make recommendations within 48 hours, the landowner shall reinter the remains in an area of the property secure from subsequent disturbance.

7 References

AECOM

2015 *Draft Environmental Impact Report for the Robert B. Diemer Water Treatment Plant Upgrades Project.* Prepared for the Metropolitan Water District of Southern California. May.

Arnold, Jeanne E., Michael R. Walsh, and Sandra E. Hollimon

2004 *The Archaeology of California*. Journal of Archaeological Research 12(1).

Bean, Walton

1968 *California: An Interpretive History.* McGraw-Hill Book Company, New York.

Bean, Lowell John, and Charles R. Smith

1978 *Gabrielino.* In *California*, edited by Robert F. Heizer, pp. 538-549. Handbook of North American Indians, Vol. 8, W.C. Sturtevant, general editor, Smithsonian Institution, Washington, D.C.

Blackburn, Thomas

1963 Ethnohistoric Descriptions of Gabrielino Material Culture. Annual Report, Archaeological Survey. University of California, Los Angeles.

Byrd, Brian F., and L. Mark Raab

2007 *Prehistory of the Southern Bight: Models for a New Millennium in California Prehistory*. T.L. Jones and K.A. Klar, eds. Pages 215-228. New York, New York: Altamira Press.

California Office of Historic Preservation

2002 *Technical Assistance Series #3 California Register of Historical Resources: Questions and Answers.* Accessed online at: https://ohp.parks.ca.gov/pages/1069/files/03%20cal_%20reg_%20q_and_a.pdf. October 2021.

City of Monterey Park

n.d. "History of Monterey Park." Accessed online at https://www.montereypark.ca.gov/721/History-of-Monterey-Park. October 21, 2021.

Couch, Jeffery S., Joanne s. Couch, and Nancy Anastasia Wiley

2009 "Saved by the Well: The Keystone Cache at CA-ORA-83, The Cogged Stone Site".

Dillon, Brian D.

2002 California Paleo-Indians: Lack of Evidence, or Evidence of a Lack? In *Essays in California Archaeology: A Memorial to Franklin Fenenga. W. J. Wallace and F. A. Riddell*, eds. Pp. 110–128. Paper number 60. Berkeley, California: Contributions of the University of California Archaeological Research Facility.

Dumke, Glenn S.

1944 *The Boom of the Eighties in Southern California.* Sixth printing, 1991. San Marino, California: Huntington Library Publications. Erlandson, Jon M.

1991 Early Maritime Adaptations on the Northern Channel Islands in Hunter-Gatherers of Early Holocene Coastal California. Volume 1: Perspectives in California Archaeology. J. M. Erlandson and R. Colten, eds. Pp. 101-111. Los Angeles, California: Costen Institute of Archaeology Press.

Eberhart, Hal

1961 The Cogged Stones of Southern California. American Antiquity, Vol. 26, No. 2: 361-370.

Erlandson, Jon M.

1991 Early Maritime Adaptations on the Northern Channel Islands *in* Hunter-Gatherers of Early Holocene Coastal California. Volume 1: Perspectives in California Archaeology. Jon M. Erlandson and R. Colten, eds. Pp. 101-111. Los Angeles, California: UCLA Institute of Archaeology Press.

Erlandson, Jon M., Theodore Cooley, and Richard Carrico

1987 A Fluted Projectile Point Fragment from the Southern California Coast: Chronology and Context at CA-SBA-1951. Journal of California and Great Basin Anthropology 9:120–128.

Google Earth

2021 Archived aerial images of the project site. Accessed at https://earth.google.com/web/ throughout October 2021.

Glassow, Michael A, L. Wilcoxen, and J. M. Erlandson

1988 Cultural and Environmental Change during the Early Period of Santa Barbara Channel Prehistory in The Archaeology of Prehistoric Coastlines. G. Bailey and J. Parkington, eds. Pp. 64–77. Cambridge, England: Cambridge University Press.

Gruen, Phillip J.

1998 Colorado River Reporting Project. Accessed online at http://npshistory.com/publications/habs-haer-hals/haer-ca-226.pdf. October 26, 2021

Guinn, J.M.

1976 Gold! Gold! Gold! From San Francisquito! In Los Angeles Biography of a City. John Caughey and LaRee Caughey, eds. Berkeley: University of California, Berkeley Press.

Harrington, John P.

1942 Cultural Element Distributions: XIX Central California Coast. University of California Anthropological Records 7(1):1-46.

Johnson, J.R., T.W. Stafford, Jr., H.O. Ajie, and D.P. Morris.

2002 Arlington Springs Revisited in Proceedings of the Fifth California Islands Symposium. D. Browne, K. Mitchell, and H. Chaney, eds. Pp. 541–545. Santa Barbara, California: USDI Minerals Management Service and the Santa Barbara Museum of Natural History.

Jones, Terry L.

1996 Mortars, Pestles, and Division of Labor in Prehistoric California: A View from Big Sur. American Antiquity 61(2):243-264.

Jones, Terry L., Richard T. Fitzgerald, Douglas J. Kennett, Charles Miksicek, John L. Fagan, John Sharp, and Jon M. Erlandson

2002 The Cross Creek Site and Its Implications for New World Colonization. American Antiquity 67:213–230.

Jones, Terry L. and Kathryn A. Klar

2005 Diffusionism Reconsidered: Linguistic and Archaeological Evidence for Prehistoric Polynesian Contact with Southern California. American Antiquity 70(3):457-484.

JRP Historical Consulting Services and California Department of Transportation

2000 Water Conveyance Systems in California, Historic Context Development and Evaluation Procedures. December.

King, Chester

1994 Native American Placenames in the Santa Monica Mountains National Recreational Area, Agoura Hills. Topanga Anthropological Consultants, California.

Koerper, Henry C. and Christopher E. Drover

1983 Chronology Building for Coastal Orange County: The Case from CA-ORA-119-A. Pacific Coast Archaeological Society Quarterly 19(2):1–34.

Koerper, Henry C., Roger D. Mason, and Mark L. Peterson

2002 Complexity, Demography, and Change in Late Holocene Orange County in Catalysts to Complexity: Late Holocene Societies of the California Coast. Volume 6: Perspectives in California Archaeology. Jon M. Erlandson and Terry L. Jones, eds. Pages 63–81. Los Angeles, California: Costen Institute of Archaeology Press.

Kowta, Makoto

1969 The Sayles Complex, A Late Milling Stone Assemblage from the Cajon Pass and the Ecological Implications of its Scraper Planes. University of California, Berkeley Publications in Anthropology 6:35–69.

Kroeber, Alfred J.

1925 Handbook of the Indians of California. Unabridged reprint 1976. New York, New York: Dover Publications, Inc.

Langenwalter, Paul E., II, Boxt, Mathew A., Boxt, Lawrence M., M.D., and Miller, Theodore T., M.D.

2001 A Sea Otter (Enhydra lutris) Femur with Embedded Projectile Point Fragment from a Late Prehistoric Camp Site in Long Beach, California. Pacific Coast Archaeological Society Quarterly 37(1).

Los Angeles Times

1953 “Southland Speeds Projects to Boost Flow of Colorado.” Accessed online at Newspapers.com on October 26, 2021.

1995 "At one time, Monterey Park was to…" Accessed online at https://www.latimes.com/archives/la-xpm-1995-11-28-me-7861-story.html. October 21, 2021.

MK Foundation

2021 "Our History." Accessed online at: https://mk-foundation.org/our-history/. October 2021.

Mason, Roger D., and Mark L. Peterson

1994 Newport Coast Archaeological Project: Newport Coast Settlement Systems–Analysis and Discussion, Volume 1, Part 1 of 2. The Keith Companies. Report on file, South Central Coastal Information Center, California State University, Fullerton.

McCawley, William

1996 The First Angelinos: The Gabrielino Indians of Los Angeles. Malki Museum/Ballena Press Cooperative Publication, Banning or Novato, California.

Metropolitan Water District of Southern California, The (Metropolitan)

2021 Personal communication via email between Annaliese Miller, Environmental Planner, Rincon Consultants, Inc. and Michelle Morrison, Environmental Specialist, Metropolitan. October 4 and 5, 2021.

1954 *Historical Record Garvey Reservoir*. Provided by Metropolitan.

n.d. "Our Story." Accessed online at https://www.mwdh2o.com/who-we-are/our-story/. October 21, 2021.

Mithun, Marianne

2004 The Languages of Native North America. Reprinted. Cambridge University Press, Cambridge, Massachusetts. Originally published 1999, Cambridge University Press, Cambridge, Massachusetts.

Monterey Park, City of

n.d. "History of Monterey Park." Accessed online at: https://www.montereypark.ca.gov/721/History-of-Monterey-Park. October 2021.

Moratto, Michael

1984 California Archaeology. Orlando, Florida: Academic Press, Inc.

National Park Service (NPS)

1995 National Register Bulletin. How to Apply the National Register Criteria for Evaluation. Accessed online at: https://www.nps.gov/subjects/nationalregister/upload/NRB-15_web508.pdf. October 2021.

1983 Archaeology and Historic Preservation: Secretary of the Interior's Standards and Guidelines. Accessed online at: https://www.nps.gov/subjects/historicpreservation/standards.htm. October 21, 2021.

NETR Online, Inc.

Var. "Historic Aerials." Via Historicaerials.com [digital photograph database]. Accessed throughout October 2021. Available at: https://www.historicaerials.com/viewer.

Nevin, David

1978 The Mexican War. Alexandria, Virginia: Time-Life Books, Inc.

O'Neil, Stephen

2002 The Acjachemen in the Franciscan Mission System: Demographic Collapse and Social Change. Master's thesis, Department of Anthropology, California State University, Fullerton.

Poole, Jean B.

2002 El Pueblo: The Historic Heart of Los Angeles. Los Angeles, CA: Getty Publications.

Potter, Amiee B., and P. Scott White

2009 *The Mitochondrial DNA Affinities of the Prehistoric People of San Clemente Island: An Analysis of Ancient DNA.* Journal of California and Great Basin Anthropology 29(2): 163-181.

Rawls, James J.

1984 *Indians of California: The Changing Image*. University of Oklahoma Press: Norman.

Reinman, Fred M.

1964 Maritime Adaptations on San Nicolas Island, California. University of California Archaeological Survey Annual Report 1963–1964:47–80.

Rick, Torben C., Jon M. Erlandson, and René Vellanoweth

2001 Paleocoastal Marine Fishing on the Pacific Coast of the Americas: Perspectives from Daisy Cave, California. American Antiquity 66:595–613.

Rolle, Andrew

2003 California: A History. Wheeling, Illinois: Harlan Davidson, Inc.

Shumway, Burgess McK.

2007 California Ranchos: Patented Private Land Grants Listed by County. Rockville, Maryland: Borgo Press.

Sutton, Mark Q.

2008 "The Palomar Tradition and Its Place in the Prehistory of Southern California."

True, Delbert L.

1993 Bedrock Milling Elements as Indicators of Subsistence and Settlement Patterns in Northern San Diego County, California. Pacific Coast Archaeological Society Quarterly 29(2):1–26.

United States Census Bureau

2019 QuickFacts, Monterey Park city, California. Accessed online at https://www.census.gov/quickfacts/fact/table/montereyparkcitycalifornia/PST045219/. October 21, 2021.

Wallace, William J.

1955 A Suggested Chronology for Southern California Coastal Archaeology. Southwestern Journal of Anthropology 11(3):214-230.

1978 Post-Pleistocene Archaeology, 9000 to 2000 B.C. In *California.* Volume 8: Handbook of North American Indians. Robert F. Heizer, ed. and William C. Sturtevant, general ed. Pp. 25-36. Washington, D.C.: Smithsonian Institution Scholarly Press.

Warren, Claude N.

1968 Cultural Tradition and Ecological Adaptation on the Southern California Coast in Archaic Prehistory in the Western United States. C. Irwin-Williams, ed. Eastern New Mexico University Contributions in Anthropology 1(3):1–14.

Workman, Boyle

1935 The City that Grew. Los Angeles, California: Southland Publication Company.

This page intentionally left blank.

Appendix A

CHRIS Search Results

South Central Coastal Information Center
California State University, Fullerton
Department of Anthropology MH-426
800 North State College Boulevard
Fullerton, CA 92834-6846
657.278.5395 / FAX 657.278.5542
sccic@fullerton.edu
California Historical Resources Information System
Orange, Los Angeles, and Ventura Counties

11/29/2021 Records Search File No.: 22910.9071

Rachel Perzel
Rincon Consultants, Inc.
180 N. Ashwood Avenue
Ventura CA 93003

Re: Records Search Results for the Garvey Reservoir Rehabilitation Project

The South Central Coastal Information Center received your records search request for the project area referenced above, located on the El Monte, CA USGS 7.5' quadrangle. Due to the COVID-19 emergency, we have temporarily implemented new records search protocols. With the exception of some reports that have not yet been scanned, we are operationally digital for Los Angeles, Orange, and Ventura Counties. See attached document for your reference on what data is available in this format. The following reflects the results of the records search for the project area and a ¼-mile radius:

As indicated on the data request form, the locations of resources and reports are provided in the following format: ☐ custom GIS maps ☒ shape files ☐ hand drawn maps

Resources within project area: 0	None
Resources within ¼-mile radius: 1	SEE ATTACHED LIST
Reports within project area: 0	None
Reports within ¼-mile radius: 1	SEE ATTACHED LIST

Resource Database Printout (list): ☒ enclosed ☐ not requested ☐ nothing listed
Resource Database Printout (details): ☐ enclosed ☒ not requested ☐ nothing listed
Resource Digital Database (spreadsheet): ☐ enclosed ☒ not requested ☐ nothing listed
Report Database Printout (list): ☒ enclosed ☐ not requested ☐ nothing listed
Report Database Printout (details): ☐ enclosed ☒ not requested ☐ nothing listed
Report Digital Database (spreadsheet): ☐ enclosed ☒ not requested ☐ nothing listed
Resource Record Copies: ☒ enclosed ☐ not requested ☐ nothing listed
Report Copies: ☐ enclosed ☐ not requested ☒ nothing listed
OHP Built Environment Resources Directory (BERD) 2019: ☒ available online; please go to https://ohp.parks.ca.gov/?page_id=30338
Archaeo Determinations of Eligibility 2012: ☐ enclosed ☒ not requested ☐ nothing listed
Los Angeles Historic-Cultural Monuments ☐ enclosed ☒ not requested ☐ nothing listed

Historical Maps: ☐ enclosed ☒ not requested ☐ nothing listed
Ethnographic Information: ☒ not available at SCCIC
Historical Literature: ☒ not available at SCCIC
GLO and/or Rancho Plat Maps: ☒ not available at SCCIC
Caltrans Bridge Survey: ☒ not available at SCCIC; please go to http://www.dot.ca.gov/hq/structur/strmaint/historic.htm
Shipwreck Inventory: ☒ not available at SCCIC; please go to http://shipwrecks.slc.ca.gov/ShipwrecksDatabase/Shipwrecks_Database.asp
Soil Survey Maps: (see below) ☒ not available at SCCIC; please go to http://websoilsurvey.nrcs.usda.gov/app/WebSoilSurvey.aspx

Please forward a copy of any resulting reports from this project to the office as soon as possible. Due to the sensitive nature of archaeological site location data, we ask that you do not include resource location maps and resource location descriptions in your report if the report is for public distribution. If you have any questions regarding the results presented herein, please contact the office at the phone number listed above.

The provision of CHRIS Data via this records search response does not in any way constitute public disclosure of records otherwise exempt from disclosure under the California Public Records Act or any other law, including, but not limited to, records related to archeological site information maintained by or on behalf of, or in the possession of, the State of California, Department of Parks and Recreation, State Historic Preservation Officer, Office of Historic Preservation, or the State Historical Resources Commission.

Due to processing delays and other factors, not all of the historical resource reports and resource records that have been submitted to the Office of Historic Preservation are available via this records search. Additional information may be available through the federal, state, and local agencies that produced or paid for historical resource management work in the search area. Additionally, Native American tribes have historical resource information not in the CHRIS Inventory, and you should contact the California Native American Heritage Commission for information on local/regional tribal contacts.

Should you require any additional information for the above referenced project, reference the record search number listed above when making inquiries. Requests made after initial invoicing will result in the preparation of a separate invoice.

Thank you for using the California Historical Resources Information System,

Michelle Galaz
Assistant Coordinator

Enclosures:

(X) Emergency Protocols for LA, Orange, and Ventura County BULK Processing Standards – 2 pages

(X) GIS Shapefiles – 2 shapes

(X) Resource Database Printout (list) – 1 page

(X) Report Database Printout (list) – 1 page

(X) Resource Record Copies – (all) – 10 pages

(X) Invoice # 22910.9071

Emergency Protocols for LA, Orange, and Ventura County BULK or SINGLE PROJECT Records Searches IF YOU HAVE A GIS PERSON ON STAFF ONLY!!

These instructions are for qualified consultants with a valid Access and Use Agreement.
WE ARE ONLY PROVIDING DATA THAT IS ALREADY DIGITAL AT THIS TIME.

Some of you have a fully digital operation and have GIS staff on board who can process a fully digital deliverable from the Information Center. IF you can accept shape file data and do not require a custom map made for you by the SCCIC, and you are willing to sort the data we provide to you then these instructions are for you. Read further to be sure. You may have only one project at this time or some of you have a lot of different search locations that can be processed all at once. This may save you a lot of time getting results back and if we process your jobs in bulk, and you may enjoy significant cost savings as well.

Bulk processing will work for you if you have a GIS person on staff who can sort bulk data for you and make you any necessary project maps. This type of job can have as many job locations as you want but the point is that we will do them in bulk – at the same time - not one at a time. We send all the bulk data back to you and you sort it. This will work if you need searches in LA, Orange, or Ventura AND if they all have the same search radius and if all the other search criteria is the same– no exceptions. This will not work for San Bernardino County because we are not fully digital for San Bernardino County. You must submit all your shape files for each location at the same time and this will count as one search. If you have some that need a different radius, or different search criteria, then you should submit that job separately with its own set of instructions.

INSTRUCTIONS FOR BULK PROCESSING:

Please send in your requests via email using the data request form along with the associated shape files and pdf maps of the project area(s) at 1-24k scale. PDFs must be able to be printed out on 8.5X 11 paper. We check your shape file data against the pdf maps. This is where we find discrepancies between your shape files and your maps. This is required.

Please use this data request form and make sure you fill it out properly.
http://web.sonoma.edu/nwic/docs/CHRISDataRequestForm.pdf

DELIVERABLES:

1. A copy of the Built Environment Resources Directory or BERD for Los Angeles, Orange, Ventura, or San Bernardino County can now be found at the OHP Website for you to do your own research. This replaces the old Historic Properties Directory or HPD. We will not be searching this for you at this time but you can search it while you are waiting for our results to save time.

2. You will only get shapefiles back, which means that you will have to make your own maps for each project location.

3. You will get a bulk processed bibliographies for resources and reports as selected; you will not get individual bibliographies for each project location.

4. You will get pdfs of resources and reports if you request them, provided that they are in digital formats. We will not be scanning records or reports at this time.

5. You will get one invoice for the bulk data processing. We can't bill this as individual jobs on separate invoices for you. If there are multiple project names, we are willing to reference all the job names on the invoice if needed. If there a lot of job id's we may ask you to send them in an email so that we can copy and paste it into the invoice details. If you need to bill your clients for the data, you can refer to our fee schedule on the OHP website under the CHRIS tab and apply the fees accordingly.

6. We will be billing you at the staff rate of $150 per hour and you will be charged for all resources and report locations according to the "custom map charges". This is in lieu of the $12 per GIS shape file data fee that we normally charge for GIS files and this will only apply during the Covid 19 emergency. You will also be billed 0.15 per pdf page, or 0.25 per excel line as is usual.

7. Your packet will be mailed to you on a CD or via Dropbox if you have an account. We use 7-zip to password protect the files so you will need both. We email you the password.

I may not have been able to cover every possible contingency in this set of instructions and will update it if necessary. You can email me with questions at sccic@fullerton.edu

Thank you,

Stacy St. James

South Central Coastal Information Center

Los Angeles, Orange, Ventura, and San Bernardino Counties

Resource List

Primary No.	Trinomial	Other IDs	Type	Age	Attribute codes	Recorded by	Reports
P-19-190175		Resource Name - SCE Transmission Tower M-0 T-5 Mesa-Newmark No. 2	Structure	Historic	HP11	2012 (Dana E. Supernowicz, Historic Resource Associates)	LA-12040

Report List

Report No.	Other IDs	Year	Author(s)	Title	Affiliation	Resources
LA-12040		2012	Supernowicz, Dana	Architectural Evaluation Study of the SCE-Mesa Newark M0-T5 Project, MetroPCS California, LLC Site No. MLAX0416, 1853 Mancha Way, Monterey Park, Los Angeles County, California	Historic Resource Associates	19-190175

Appendix B

Sacred Lands File Results

NATIVE AMERICAN HERITAGE COMMISSION

CHAIRPERSON
Laura Miranda
Luiseño

VICE CHAIRPERSON
Reginald Pagaling
Chumash

SECRETARY
Merri Lopez-Keifer
Luiseño

PARLIAMENTARIAN
Russell Attebery
Karuk

COMMISSIONER
William Mungary
Paiute/White Mountain Apache

COMMISSIONER
Julie Tumamait-Stenslie
Chumash

COMMISSIONER
[**Vacant**]

COMMISSIONER
[**Vacant**]

COMMISSIONER
[**Vacant**]

EXECUTIVE SECRETARY
Christina Snider
Pomo

NAHC HEADQUARTERS
1550 Harbor Boulevard
Suite 100
West Sacramento,
California 95691
(916) 373-3710
nahc@nahc.ca.gov
NAHC.ca.gov

October 26, 2021

Rachel Perzel
Rincon Consultants, Inc.

Via Email to: rperzel@rinconconsultants.com

Re: Native American Tribal Consultation, Pursuant to the Assembly Bill 52 (AB 52), Amendments to the California Environmental Quality Act (CEQA) (Chapter 532, Statutes of 2014), Public Resources Code Sections 5097.94 (m), 21073, 21074, 21080.3.1, 21080.3.2, 21082.3, 21083.09, 21084.2 and 21084.3, Garvey Reservoir Rehabilitation Project, Los Angeles County

Dear Ms. Perzel:

Pursuant to Public Resources Code section 21080.3.1 (c), attached is a consultation list of tribes that are traditionally and culturally affiliated with the geographic area of the above-listed project. Please note that the intent of the AB 52 amendments to CEQA is to avoid and/or mitigate impacts to tribal cultural resources, (Pub. Resources Code §21084.3 (a)) ("Public agencies shall, when feasible, avoid damaging effects to any tribal cultural resource.")

Public Resources Code sections 21080.3.1 and 21084.3(c) require CEQA lead agencies to consult with California Native American tribes that have requested notice from such agencies of proposed projects in the geographic area that are traditionally and culturally affiliated with the tribes on projects for which a Notice of Preparation or Notice of Negative Declaration or Mitigated Negative Declaration has been filed on or after July 1, 2015. Specifically, Public Resources Code section 21080.3.1 (d) provides:

Within 14 days of determining that an application for a project is complete or a decision by a public agency to undertake a project, the lead agency shall provide formal notification to the designated contact of, or a tribal representative of, traditionally and culturally affiliated California Native American tribes that have requested notice, which shall be accomplished by means of at least one written notification that includes a brief description of the proposed project and its location, the lead agency contact information, and a notification that the California Native American tribe has 30 days to request consultation pursuant to this section.

The AB 52 amendments to CEQA law does not preclude initiating consultation with the tribes that are culturally and traditionally affiliated within your jurisdiction prior to receiving requests for notification of projects in the tribe's areas of traditional and cultural affiliation. The Native American Heritage Commission (NAHC) recommends, but does not require, early consultation as a best practice to ensure that lead agencies receive sufficient information about cultural resources in a project area to avoid damaging effects to tribal cultural resources.

The NAHC also recommends, but does not require that agencies should also include with their notification letters, information regarding any cultural resources assessment that has been completed on the area of potential effect (APE), such as:

1. The results of any record search that may have been conducted at an Information Center of the California Historical Resources Information System (CHRIS), including, but not limited to:

- A listing of any and all known cultural resources that have already been recorded on or adjacent to the APE, such as known archaeological sites;
- Copies of any and all cultural resource records and study reports that may have been provided by the Information Center as part of the records search response;
- Whether the records search indicates a low, moderate, or high probability that unrecorded cultural resources are located in the APE; and
- If a survey is recommended by the Information Center to determine whether previously unrecorded cultural resources are present.

2. The results of any archaeological inventory survey that was conducted, including:

   - Any report that may contain site forms, site significance, and suggested mitigation measures.

     All information regarding site locations, Native American human remains, and associated funerary objects should be in a separate confidential addendum, and not be made available for public disclosure in accordance with Government Code section 6254.10.

3. The result of any Sacred Lands File (SLF) check conducted through the Native American Heritage Commission was positive. Please contact the Gabrieleno Band of Mission Indians – Kizh Nation on the attached list for more information.

4. Any ethnographic studies conducted for any area including all or part of the APE; and

5. Any geotechnical reports regarding all or part of the APE.

Lead agencies should be aware that records maintained by the NAHC and CHRIS are not exhaustive and a negative response to these searches does not preclude the existence of a tribal cultural resource. A tribe may be the only source of information regarding the existence of a tribal cultural resource.

This information will aid tribes in determining whether to request formal consultation. In the event that they do, having the information beforehand will help to facilitate the consultation process.

If you receive notification of change of addresses and phone numbers from tribes, please notify the NAHC. With your assistance, we can assure that our consultation list remains current.

If you have any questions, please contact me at my email address: Andrew.Green@nahc.ca.gov.

Sincerely,

Andrew Green
Cultural Resources Analyst

Attachment

Appendix C

California DPR 523 Series Forms

State of California — The Resources Agency DEPARTMENT OF PARKS AND RECREATION **PRIMARY RECORD**	Primary # HRI # Trinomial NRHP Status Code	
Other Listings Review Code	Reviewer	Date

 ***Resource Name or #:** 1061 South Orange Avenue

P1. Other Identifier: Garvey Reservoir

***P2. Location:** ☐ **Not for Publication** ■ **Unrestricted** ***a. County:** Los Angeles

and (P2b and P2c or P2d. Attach a Location Map as necessary.)

***b. USGS 7.5' Quad:** *El Monte* **Date:** 1966 **T:** 01.0S; **R:** 12.0W; **¼ of ¼ of Sec:** 26, 27, 34, 35 ; S.B. **B.M.**

c. Address: 1061 South Orange Avenue City: Monterey Park Zip: 91755

d. UTM: Zone: ; mE/ mN (G.P.S.)

e. Other Locational Data: Los Angeles County Assessor's Parcel Numbers 5260-013-910 and 5260-013-905 Elevation:

***P3a. Description:** (Describe resource and its major elements. Include design, materials, condition, alterations, size, setting, and boundaries)

Located at 1061 South Orange Avenue in Monterey Park, Los Angeles County, the subject property is a roughly 142-acre, irregularly shaped property developed with Garvey Reservoir and a variety of appurtenant structures and features owned and operated by The Metropolitan Water District of Southern California (Metropolitan). The property is surrounded by chain link fencing and includes mature landscaping throughout the site. Its various structures and features include the following, which are further detailed on Continuation Sheet, page 4: Garvey Reservoir and the Inlet/Outlet (I/O) tower, developed area southeast of reservoir (including Junction Structure, Administration Building/Water Quality Laboratory, standby generator enclosure, and Sodium Hypochlorite Tank Farm,) communications site, (including three towers, one permanent building, and several temporary modular buildings), surge tank, construction trailer staging area, and construction staging area. (See Continuation Sheet, page 4.)

***P3b. Resource Attributes:** HP22: Reservoir

***P4. Resources Present:** ■Building ■Structure ☐Object ☐Site ■District ☐Element of District ☐Other (Isolates, etc.)

P5a. Photo or Drawing (Photo required for buildings, structures, and objects.)

(See Continuation Sheet, pages 7 and 8)

P5b. Description of Photo: (View, date, accession #)
Inlet/Outlet tower, west-facing; photo taken October 12, 2021. (See Continuation Sheet, pages 7 and 8.)

***P6. Date Constructed/Age and Sources:** ■Historic ☐Prehistoric ☐Both
1954 (Metropolitan 1954)

***P7. Owner and Address:**
The Metropolitan Water District of Southern California
700 North Alameda Street
Los Angeles, California 90012

***P8. Recorded by:** (Name, affiliation, and address)
Rachel Perzel and Andrew Rodriguez
Rincon Consultants, Inc.
180 North Ashwood Avenue
Ventura, CA 93003

***P9. Date Recorded:**
October 12, 2021

***P10. Survey Type:** (Describe)
Intensive

***P11. Report Citation:** (Cite survey report and other sources, or enter "none.")
Perzel, Rachel, Andrew Rodriquez, Kyle Montgomery, Steven Treffers, Ken Victorino, and Shannon Carmack. 2021. Garvey Reservoir Rehabilitation Project Cultural Resources Assessment. Rincon Consultants, Inc. Project No. 20-09668. Report on file at the South Central Coastal Information Center, California State University, Fullerton.

***Attachments:** ☐NONE ■Location Map ☐Sketch Map ■Continuation Sheet ■Building, Structure, and Object Record ☐Archaeological Record ☐District Record ☐Linear Feature Record ☐Milling Station Record ☐Rock Art Record ☐Artifact Record ☐Photograph Record ☐ Other (List):

State of California — The Resources Agency DEPARTMENT OF PARKS AND RECREATION **LOCATION MAP**	Primary # HRI# Trinomial

 ***Resource Name or #:** 1061 South Orange Avenue

***Map Name:** *El Monte Quadrangle* ***Scale:** 1:24,000 ***Date of Map:** 1966

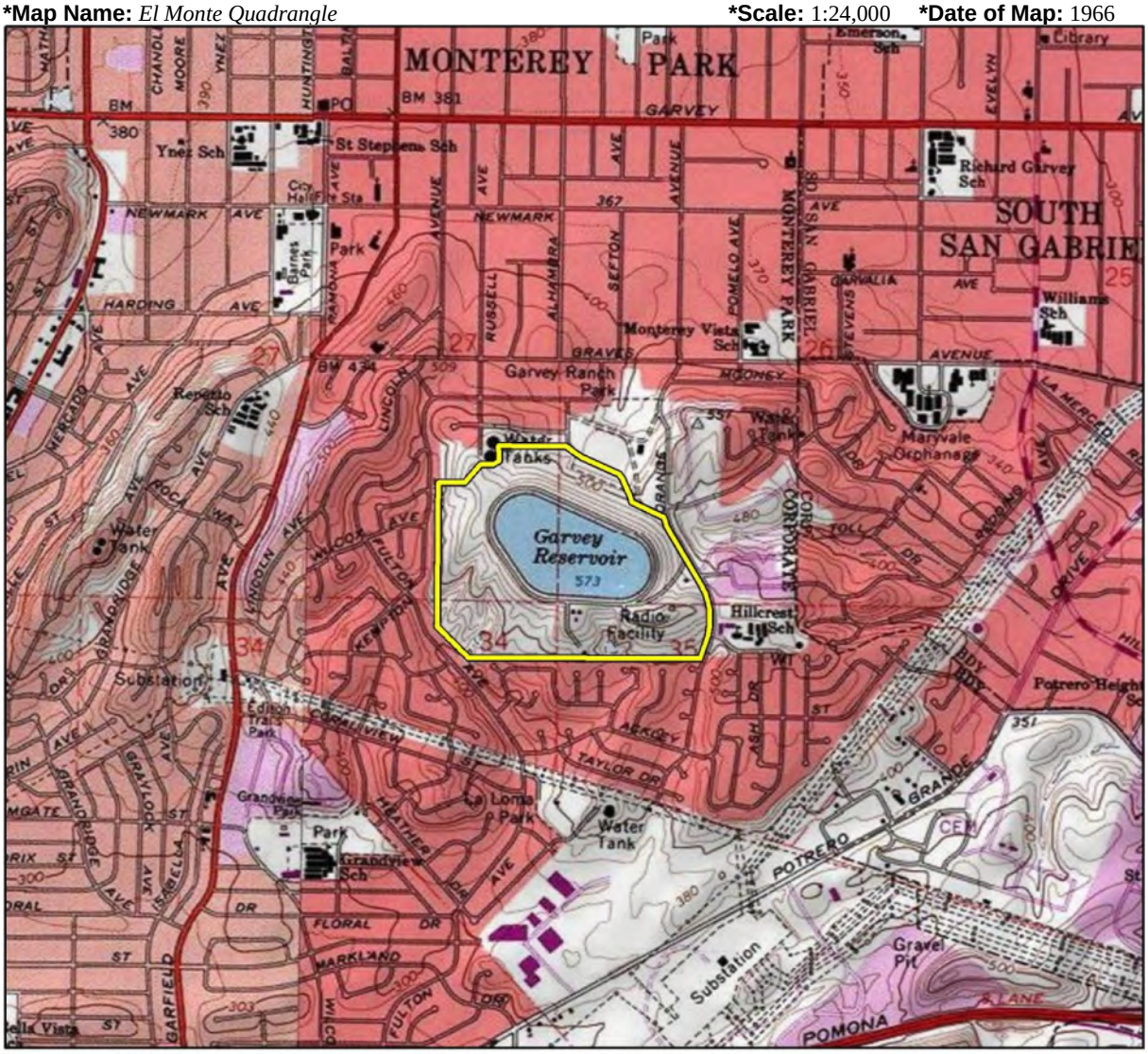

Basemap provided by National Geographic Society, Esri and their licensors © 2021. El Monte Quadrangle. T01.0S R12.0W S26, 27,34, 35. The topographic representation depicted in this map may not portray all of the features currently found in the vicinity today and/or features depicted in this map may have changed since the original topographic map was assembled.

Project Location

0 1,000 2,000 Feet

N

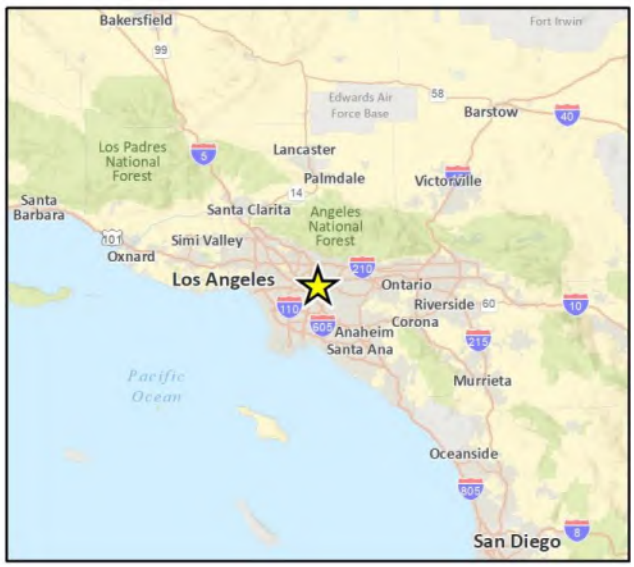

BUILDING, STRUCTURE, AND OBJECT RECORD

***NRHP Status Code** 6Z

***Resource Name or #** 1061 South Orange Avenue

B1. Historic Name: Garvey Reservoir
B2. Common Name: Garvey Reservoir
B3. Original Use: Water Reservoir
B4. Present Use: Water Reservoir

***B5. Architectural Style:** Modern influenced; does not embody a style

***B6. Construction History:** (Construction date, alterations, and date of alterations)
Garvey Reservoir was constructed in 1954. Its construction history and alterations are noted on Continuation Sheet, page 5.

***B7. Moved?** ■No ☐Yes ☐Unknown **Date:** N/A **Original Location:** N/A

***B8. Related Features:** N/A

B9a. Architect: Unknown
b. Builder: Morrison-Knudsen Co., Inc. and R.A. Westbrook

***B10. Significance:** N/A **Theme:** N/A **Area:** N/A
Period of Significance: N/A **Property Type:** N/A **Applicable Criteria:** N/A
(Discuss importance in terms of historical or architectural context as defined by theme, period, and geographic scope. Also address integrity.)

Property History and Construction Chronology

A review of historical aerial images reveals that the hilly are area immediately surrounding and comprising the subject property remained undeveloped as of early 1952, although the surrounding region was largely developed with residential suburbs by the early 1950s (NETR Online, Inc. var.). The subject property is situated within what was historically Garvey Ranch, a property associated with Monterey Park's early development. In 1950, Garvey Ranch was sold to the Inglewood Park Cemetery Association for development of a cemetery (Metropolitan 1954). However, the association could not secure a zoning variance to use the land for a cemetery, and the City of Monterey Park eventually turned to other land use alternatives for the property. In 1950, the property was sold to Metropolitan for $72,900 and developed into Garvey Reservoir as part of Metropolitan's ongoing expansion of the Colorado River Aqueduct under general manager and chief engineer, Robert B. Diemer and assistant chief engineer, R.A. Skinner (Metropolitan 1954).

As described in Metropolitan's *Historical Record Garvey Reservoir,* the purpose of Garvey Reservoir was to "provide storage of the off-peak flow to meet the peak demand of the areas served by the Middle Feeder and the cross connections to the Palos Verdes and Lower Feeder systems." Garvey Reservoir would "furnish a two-day supply to the eastern and southern portions of Los Angeles County as well as supplement the supply in the Orange County reservoir and serve the constituents in Orange County" (Metropolitan 1954).

Bids for construction of the reservoir began September 8, 1952, and a joint venture between Morrison-Knudsen Co., Inc. and R.A. Westbrook (referred to jointly in historical documents as Morrison-Knudsen Co., Inc. and R.A. Westbrook) won the bid at $3,143,694.50 (Metropolitan 1954). Morrison-Knudsen Co. was founded in 1912 and went on to contribute to several notable infrastructure projects in the United States throughout the 20th century, including the New York Canal, the Hoover Dam, the San Francisco Bay Bridge, and Penn Station, among others (MK Foundation 2021). The research conducted for this study failed to identify consequential information related to R.A. Westbrook. At the time of Garvey Reservoir's construction, Morrison-Knudsen Co. and R.A Westbrook's president and vice president/general manager were H.W. Morrison and J.B. Bonney, respectively; field personnel included R.A. Westbrook, general manager, D. Westbrook, superintendent, and D. Hoyt, foreman. In addition to Morrison-Knudsen Co., Inc. and R.A. Westbrook, Garvey Reservoir was constructed with the assistance of the following subcontractors: United Concrete Pipe Corporation, Southwest Welding and Manufacturing Co., the ABC Construction Co., W.E. Hall Construction Co., Lefever and Bing, Los Angeles Fence Co., Ets. Hockin & Galvin, E.R. Larson & Co., Fontana Steel Co., Pacific Iron and Steel Corp., Hunt Process Co., House of Murphy, Golden State Sandblasting Co., Armco Drainage, and Metal Products, Inc. (See Continuation Sheet 5)

B11. Additional Resource Attributes: (List attributes and codes): N/A
***B12. References:** See Continuation Sheet 6
B13. Remarks: N/A
***B14. Evaluator:** Rachel Perzel and Andrew Rodriguez, Rincon Consultants, Inc.
***Date of Evaluation:** October 12, 2021

(Sketch Map with north arrow required.)

(This space reserved for official comments.)

***P3a. Description (Continued):**

Reservoir and I/O Tower:

Original to the property's development, the open, concrete-lined Garvey Reservoir is situated centrally within the subject property on top of a hill surrounded by concrete v-ditches and earthen embankments. It is roughly triangular in shape with rounded corners and is surrounded by a paved access road. The eastern portion of the reservoir features an I/O tower, which controls the reservoir's water flow by the operation of gates at various elevations. The concrete I/O tower features a circular plan, narrow multi-light steel-framed windows, and a flat roof. The Modern-influenced structure exhibits minimal architectural detailing and is accessible via a metal access bridge that features affixed light fixtures that appear original. It contains a variety of operational equipment (electrical equipment, valves, pumps, etc.) which also appear original to its design.

Developed Area Southeast of Reservoir:

In the southeastern portion of the property is a paved, developed area that includes the Junction Structure, Administration Building/Water Quality Laboratory, standby generator enclosure, and Sodium Hypochlorite Tank Farm, each of which is described individually below.

Junction Structure:

Original to the property's development and located adjacent to South Orange Avenue, the utilitarian, partially-subterranean Junction Structure contains a variety of valves and other equipment essential to the property's water distribution function. The above grade portion of the structure features a rectangular footprint, concrete walls with narrow metal-framed hopper windows, and a flat roof. It contains the structure's pedestrian entry, which consists of a single metal door on the north elevation. The Modern-influenced structure features minimal architectural detailing limited to simple incising on exterior walls. On the interior, the above grade portion of the structure contains a stairway that leads to a below grade area where valves and associated equipment are housed.

Administration Building/Water Quality Laboratory:

Located approximately 50 feet west of the Junction Structure is a single-story building that functions as the property's Administration Building and Water Quality Laboratory. This building does not embody a particular architectural style. Administrative functions are housed in the eastern portion of the building, and the Water Quality Laboratory is located in the western portion. Indicative of their construction at separate times, the Administration Building (circa 1952) and Water Quality Laboratory (circa 1976) portions of the building vary in height. The utilitarian, roughly T-planned building is constructed of concrete block and features a flat roof. An abundance of window and door types are featured. Window units vary throughout and include metal-framed casement and hopper windows, which appear original, and aluminum sliders, which appear to be replacements. Wood and metal doors are both present. The building's north elevation features a former bay door opening that has been enclosed to contain a single door and window surrounded with wood siding.

To the west of the Administration Building/Water Quality Laboratory is a simple structure formerly used to contain hazardous materials ("former caustic soda structure"). The square-planned structure is only a few feet in height and is unroofed. It is constructed of concrete block and features a large, concrete-formed circular-planned pit at center.

Standby Generator Enclosure

Added to the property in 1974, the property's standby generator enclosure (historically known as the emergency generator building) is located approximately 30 feet west of the Administration Building/Water Quality Laboratory. The small utilitarian building, which houses the property's backup generator, is consistent in design with the Administration Building/Water Quality Laboratory as previously described and does not embody a particular architectural style. The rectangular planned building is constructed of concrete block and features a flat roof. It is largely void of fenestration but is lined with slotted doors on the east elevation. Immediately to the north of this standby generator enclosure is an open-air structure that consists of a concrete slab sheltered by a metal framed and clad roof and contains a large fuel tank.

Sodium Hypochlorite Tank Farm

Constructed between 1996 and 1998 and located approximately 40 feet north of the Administration Building/Water Quality Laboratory is the property's Sodium Hypochlorite Tank Farm. The tank farm structure is partially open air. It consists of a concrete slab on which a variety of equipment is mounted. The walls are steel-framed; the top half of walls are clad with metal panels while the bottom portions are open-air and surrounded with simple metal pipe railings. Similarly, a large portion of the structure is unroofed on its eastern side. Awnings extend from the building to shelter electrical equipment.

Staging Areas

There are two staging areas located adjacent to the reservoir, a construction staging area at the north and a construction trailer staging area at the south. The construction staging area features hard-packed gravel ground and does not include any built environment features. The construction trailer staging area is accessible via a paved drive and includes a paved area within which a temporary structure (double-wide construction trailer and associated shade structure) is sited. Surrounding the construction trailer staging area is a grassy, artificially-flattened area that is partially surrounded with concrete retaining walls and a variety of mature plantings. This area was formerly developed with three small residences that were demolished between July 2008 and June 2009 (Google Earth 2021). Two sets of concrete steps and associated light standards remain.

Surge Tank

The 1,000-gallon, metal surge tank is sited on a concrete slab approximately 60 feet southeast of the reservoir. Several metal pipes extend from the prefabricated tank in various directions into the ground as well as into adjacent associated features such as pumps and a pressure switch. Adjacent to the tank is a temporary metal storage container that contains emergency response equipment.

Communications Site

Located approximately 550 feet east of the surge tank is a paved area that functions as a communications site. The site includes three steel towers of various form and height on which a variety of antennas and dishes are mounted. Two utilitarian modular buildings and one concrete constructed building that house communications equipment surround the towers, which were constructed between 1956 and 1960. Also located in this area are various associated equipment such as oil/gas tanks and a large generator.

***B6. Construction History (continued):**

A review of historical aerial images and archival documents provided by Metropolitan provides the construction chronology for the property outlined below:

1952-1954: Reservoir, I/O tower, current Water Quality Laboratory (original chlorination building/Water Quality Laboratory), and Junction Structure are constructed. Several buildings no longer extant (at least three small buildings used as caretakers' residences and what appear to be two buildings in developed area southeast of reservoir) are also constructed.
1956-1960: Utilitarian concrete building located within the current communication tower site is constructed.
1960s-1970s: Additions/alterations to the chemical feed and electrical system and distribution system resulting from an effort to implement centralized controls are made (Metropolitan 2021).
1974: Standby generator enclosure (currently referred to as the backup generator enclosure) is constructed.
1976: Current Administration Building is added to existing chlorination building/Water Quality Laboratory.
1983: Floating reservoir cover is installed (Metropolitan 2021).
Post 1976: Communications site is further developed with towers and modular buildings; developed area southeast of reservoir is further developed with additional buildings. Sodium Hypochlorite Tank Farm is constructed between 1996 and 1998.
1989-1999: Cracks in reservoir bottom are repaired. Reservoir bottom liner, geo-textile cushion, automatic sensing and remote recording piezometers, new floating cover, and polypropylene liner on top of the drainage layer are installed. Leak detection and monitoring system is upgraded, and reservoir is connected to seepage alarm (Metropolitan 2021).
1999: Reservoir liner is replaced with a multi-layer Hypalon. Extensive seismic and seepage monitoring system is installed.
2008-2009: Former caretakers' residences are demolished.

***B10. Significance (continued):**

Property History and Construction Chronology (continued):

Construction of Garvey Reservoir began on October 21, 1952, and was completed on October 11, 1954, a reported six months ahead of schedule. Work at the site included "excavation, rolled fill embankment, asphaltic concrete lining and roads, and the construction of inlet and outlet pipes, outlet tower, pipe gallery, feeder pipelines, control structure, venturi meter structures, spillway, drains, steel footbridge, roads, fences, electrical facilities and appurtenant works" (Metropolitan 1954). An aerial image of the property dated 1956 depicts the reservoir in its initial development. In that image, the reservoir, I/O tower, and surrounding concrete v-ditches and earthen embankments appear generally consistent with the property's current conditions. At that time, there were three caretaker residences, which were demolished circa 2008, located south of the reservoir in the current construction trailer staging area. Also visible in the 1956 aerial photograph is the developed area southeast of the reservoir; at that time, the Junction Structure and current Water Quality Laboratory (originally a chlorination building with small integrated Water Quality Laboratory) appear extant. Also extant at that time are what appear to be two small buildings located north of the Junction Structure and current Water Quality Laboratory, which no longer remain.

Historical Evaluation:

Water conveyance-related properties are generally eligible under National Register of Historic Places (NRHP) Criterion A/California Register of Historical Resources (CRHR) Criterion 1 if they are associated with specific important events (e.g., first long-distance transmission of hydroelectric power) or an important pattern of events (e.g., development of irrigated farming) (JRP Historical Consulting Services and California Department of Transportation 2000). Archival research indicates that Garvey Reservoir is one of several reservoirs constructed as part of Metropolitan's post-World War II expansion of the Colorado River Aqueduct system to service the rapidly expanding needs of the Los Angeles region. The research conducted for this study did not indicate that Garvey Reservoir is particularly unique or significant within this context; rather, it is an anticipated response to post-World War II growth, similar to many other infrastructural elements in the region. It does not appear to be significant within the context of water conveyance systems or any other event or pattern of events in the history of the county, region, state, or nation. Therefore, the Garvey Reservoir property is recommended ineligible for listing in the NRHP or CRHR under Criterion A/1.

Archival research identified many individuals historically associated with the Garvey Reservoir property, several of whom are listed in the *Property History and Construction Chronology* section above. Because the property has been in operation for 67 years, it is associated with a wide variety of individuals, including those who designed, constructed, and worked at it over the decades. The research conducted for this study did not identify persons associated with the property who are individually significant within a historic context and/or whose association with the property would be exemplary of that individual's productive life. Therefore, the Garvey Reservoir property is recommended ineligible for listing in the NRHP or CRHR under Criterion B/2. (See Continuation Sheet, page 6)

Historical Evaluation (continued):

Water conveyance features are generally found eligible under NRHP Criterion C/CRHR Criterion 3 as the earliest, sole surviving, largest, or best-preserved example of a particular type of water conveyance system or a property that introduced a design innovation or evolutionary trend in engineering (JRP Historical Consulting Services and California Department of Transportation 2000). The engineering and construction of Garvey Reservoir and its appurtenant features is consistent with other reservoirs throughout the Metropolitan system, many of which remain, and is a relatively late example. Additionally, Garvey Reservoir is of common design, and this study identified no evidence suggesting that this reservoir and its associated features represented any particular engineering achievement at the time of their construction. The facility's other built environment features (e.g., I/O tower, Junction Structure, Administration Building/Water Quality Laboratory) likewise exhibit little architectural distinction. While some of the buildings appear Modern-influenced, none are excellent examples of the style, of which many exist in the region. While the designers of all of the property's features were not in all cases identified, there is nothing apparent in the design of these features to suggest they would be considered an exemplary work of any master. For the reasons summarized above, the Garvey Reservoir property does not embody the distinctive characteristics of a type, period or method of construction, represent the work of a master, or possess high artistic values. Therefore, the property is recommended ineligible for listing in the NRHP and CRHR under Criterion C/3.

Lastly, the research conducted as part of this evaluation identified no information suggesting the Garvey Reservoir has the potential to yield important information in prehistory or history (Criterion D/4).

*B12. References (continued):

Google Earth. Archived aerial images of the project site. Accessed at https://earth.google.com/web/ throughout October 2021.

JRP Historical Consulting Services and California Department of Transportation. *Water Conveyance Systems in California, Historic Context Development and Evaluation Procedures*. December 2000.

MK Foundation. 2021. "Our History." Accessed online at: https://mk-foundation.org/our-history/. October 2021.

Metropolitan Water District of Southern California, The (Metropolitan). 1954. *Historical Record Garvey Reservoir*. Provided by Metropolitan.

Metropolitan Water District of Southern California (Metropolitan), The. 2021. Personal communication via email between Annaliese Miller, Environmental Planner, Rincon Consultants, Inc. and Michelle Morrison, Environmental Specialist, Metropolitan. October 4 and 5, 2021.

NETR Online. Various Dates. "Historic Aerials." Via Historicaerials.com [digital photograph database]. Accessed throughout October 2021. Available at: https://www.historicaerials.com/viewer.

***P5a/P5b. Photos (continued):**

Site Photographs of Reservoir, I/O Tower, Junction Structure, Administration Building/Water Quality Laboratory, Former Caustic Soda Structure, and Backup Generator Enclosure

Photograph 1. Garvey Reservoir

Photograph 2. I/O Tower

Photograph 3. Junction Structure

Photograph 4. Administration Building and Water Quality Laboratory

Photograph 5. Former Caustic Soda Structure

Photograph 6. Backup Generator Enclosure

***P5a/P5b. Photos (continued):**

Site Photographs of Sodium Hypoclorite Tank Farm, Construction Staging Area, Construction Trailer Staging Area, Surge Tank, and Communications Site

Photograph 7. Sodium Hypochlorite Tank Farm

Photograph 8. Construction Staging Area

Photograph 9. Construction Trailer Staging Area

Photograph 10. Surge Tank

Photograph 11. Communications Site

Photograph 12. Building at Communications Site

DocuSign Envelope ID: CE122D57-DAE0-4A57-B7E8-E47E8AC8739C

State of California – Natural Resources Agency
DEPARTMENT OF FISH AND WILDLIFE
South Coast Region
3883 Ruffin Road
San Diego, CA 92123
(858) 467-4201
wildlife.ca.gov

GAVIN NEWSOM, Governor
CHARLTON H. BONHAM, Director

February 16, 2024

Michelle Morrison
Metropolitan Water District of Southern California
700 North Alameda Street
Los Angeles, CA 90012
MMorrison@mwdh2o.com

SUBJECT: GARVEY RESERVOIR REHABILITATION PROJECT (PROJECT); NOTICE OF PREPARATION (NOP); SCH #2024010394

Dear Michelle Morrison:

The California Department of Fish and Wildlife (CDFW) has received a Notice of Preparation of a Draft Environmental Impact Report (DEIR) from the Metropolitan Water District of Southern California (MWD) pursuant to the California Environmental Quality Act (CEQA) and CEQA Guidelines.[1]

Thank you for the opportunity to provide comments and recommendations regarding those activities involved in the Project that may affect California fish and wildlife. Likewise, we appreciate the opportunity to provide comments regarding those aspects of the Project that CDFW, by law, may be required to carry out or approve through the exercise of its own regulatory authority under the Fish and Game Code.

CDFW's Role

CDFW is California's Trustee Agency for fish and wildlife resources and holds those resources in trust by statute for all the people of the State [Fish & G. Code, §§ 711.7, subdivision (a) & 1802; Pub. Resources Code, § 21070; California Environmental Quality Act Guidelines, § 15386, subdivision (a)]. CDFW, in its trustee capacity, has jurisdiction over the conservation, protection, and management of fish, wildlife, native plants, and habitat necessary for biologically sustainable populations of those species (Id., § 1802). Similarly, for purposes of CEQA, CDFW is charged by law to provide, as available, biological expertise during public agency environmental review efforts, focusing specifically on projects and related activities that have the potential to adversely affect State fish and wildlife resources.

[1] CEQA is codified in the California Public Resources Code in section 21000 et seq. The "CEQA Guidelines" are found in Title 14 of the California Code of Regulations, commencing with section 15000.

DocuSign Envelope ID: CE122D57-DAE0-4A57-B7E8-E47E8AC8739C

CDFW is also submitting comments as a Responsible Agency under CEQA (Pub Resources Code, §21069; CEQA Guidelines, §15381). CDFW expects that it may need to exercise regulatory authority as provided by the Fish and Game Code, including lake and streambed alteration regulatory authority (Fish & G. Code, §1600 et seq.). Likewise, to the extent implementation of the Project as proposed may result in "take," as defined by State law, of any species protected under the California Endangered Species Act (CESA) (Fish & Code, § 2050 et seq.), or CESA-listed rare plant pursuant to the Native Plant Protection Act (NPPA; Fish & G. Code §1900 et. sea.), CDFW recommends the Project proponent obtain appropriate authorization under the Fish and Game Code.

Project Description Summary

Proponent: MWD

Objective: The Project proposes several upgrades and rehabilitation components to the existing 142-acre Garvey Reservoir (reservoir):

Reservoir Cover and Liner

The existing reservoir floating cover is approximately 1,900,000 square feet in size with a series of weights and floats on top of the cover. The Project proposes to replace the liner of the cover. Prior to start of work in the reservoir, water would be drained through the junction structure into the middle feeder. Water below the intake at the inlet/outlet (I/O) tower would be pumped out and drained through existing v-ditches to the stormwater drainage system. Water discharged to the stormwater drainage system would be dechlorinated prior to discharge. The reservoir drainage system underneath the liner (i.e., underlying geo-textile cushion, underdrain, circulation piping) would be inspected and repairs or upgrades would occur, if necessary. The existing leak detection and monitoring system would also be upgraded, and the Inlet/Outlet (I/O) tower float assembly would be redesigned. Following inspection of the drainage system, a new floating cover would be installed. Start-up testing procedures (i.e., cover inflation, chlorination, instrument testing) would occur prior to resuming operations.

I/O Tower Rehabilitation and Junction Structure

The reservoir's I/O tower currently exists at the east end of the reservoir. The Project would provide seismic upgrades to the I/O tower and access bridge to increase seismic resistance against earthquakes. Lighting fixtures along the bridge and equipment within the I/O tower would also be upgraded and bulbs would be replaced with LED lights. In addition to replacement of light fixtures and seismic upgrades, five valves in the junction structure would be replaced after the reservoir has been emptied and refilled.

Standby Generator and Facility Electrical System

The existing generator is in the eastern portion of the Project area at ground level between the administration building, water quality laboratory, and the sodium hypochlorite tank farm. The concrete block building housing the generator would be demolished, and a new generator would be installed under an open-air canopy structure or a new enclosed

DocuSign Envelope ID: CE122D57-DAE0-4A57-B7E8-E47E8AC8739C

building. In addition to replacement of the standby generator, work on the facility electrical system work would occur underground between the administration building, water quality laboratory, and the sodium hypochlorite tank farm.

Surge Tank Telemetry

An existing 1,000-gallon surge tank is located at the top of the reservoir embankment, immediately south of the reservoir. Telemetry equipment would be improved with new direct cables. Pressure switches and automated tank controls would also be replaced.

Administration Building and Water Quality Laboratory Rehabilitation

The administration building and water quality laboratory are in the former chlorination building in the eastern portion of the Project area. The Project proposes upgrades and rehabilitation of the interior of the water quality laboratory. Rehabilitation activities would include design of a new interior plan layout, relocation of the emergency eye wash station, modifications to the existing restroom, and reconstruction of a retaining wall on the south side of the building.

Miscellaneous Site Upgrades

Smaller site components may be repaired or rehabilitated as part of the Project. Miscellaneous upgrades may include repaving existing reservoir roads, replacement of chain link fencing and gates, drainage improvements, replacement of security cameras, and upgrades to the ammonia feed system. Tree trimming, tree and vegetation removal, and landscaping would also occur as part of the Project.

Pump Station

In addition to upgrades and rehabilitation of the existing reservoir, the Project proposes to construct a new pump station adjacent to South Orange Avenue. The new pump station would be approximately 150 feet south of the junction structure and would house multiple pumps and valves for operational flexibility. The pump station would be approximately 500 square feet in size and would be partially recessed about 10 feet into the hillside adjacent to South Orange Avenue.

Project construction activities would occur in three phases over the course of approximately six years. The first phase would involve work on the reservoir cover and liner and the I/O tower. The second phase would involve work on the junction structure. Project activities related to facility electrical system, standby generator, surge tank telemetry, administration building, water quality laboratory, and miscellaneous sites upgrades would occur during both phases. The third phase would consist of constructing the pump station and upgrading the ammonia feed system. The construction staging area would be in an existing concrete area northwest of the reservoir and a construction trailer area is proposed south of the reservoir. Operations and maintenance activities would remain the same upon completion of the Project. Construction activities would occur primarily during daytime hours with occasional nighttime construction activities for specific Project activities (i.e., cover inflation within the reservoir and reservoir start up activities).

DocuSign Envelope ID: CE122D57-DAE0-4A57-B7E8-E47E8AC8739C

Location: The Project area is approximately 142 acres located at 1061 South Orange Avenue in the City of Monterey Park, California. The Project area is surrounded by Garvey Ranch Park and Monterey Park City Yard to the north, Kempton Avenue to the west, South Orange Avenue to the east, and Ackley Street to the south.

Biological Setting: The Project area is situated in a residential neighborhood, with Hillcrest Elementary School to the east and Garvey Ranch Park to the north, and the boundary is entirely fenced off from surrounding properties. The reservoir lies in the center of the Project area with a variety of water infrastructure components and accessory structures throughout the Project area. The area consists primarily of developed land (i.e., paved roads, concrete areas, infrastructure) with relatively steep hillslopes directly adjacent to the reservoir. Two detention basins are in the southwest portion of the Project and receive flow from a rainwater collection system and surface runoff from adjacent uplands. Flow from the basins is conveyed into the underground stormwater system.

A general field survey was conducted on July 22, 2021, and findings were provided in the Initial Study. An aquatic resources delineation was also conducted on November 23, 2021, and findings were compiled in a *Jurisdictional Delineation Report*.

Vegetation in the Project area is regularly maintained by MWD and consists of non-native annual grasses (e.g., *Avena* sp., *Bromus* sp.) and sea fig (*Carpobrotus chilensis)* on the hillslopes. Eucalyptus (*Eucalyptus* sp.), elm (*Ulmus* sp.), Mexican fan palm (*Washingtonia robusta*), and pine (*Pinus* sp.) are present in the eastern, southern, and northern portions of the Project area. Additionally, there are highly fragmented patches of coastal sage scrub (CSS) on the south side of the Project area, which consist primarily of California buckwheat (*Eriogonum fasciculatum*) and sage (Salvia sp.). During the field survey, wildlife species observed include, but is not limited to, western fence lizard (*Sceloporus occidentalis*), common side blotched lizard (*Uta stansburiana*), California ground squirrel (*Spermophilus beecheyi*), red-tailed hawk (*Buteo jamaicensis*), and northern mockingbird (*Mimus polyglottos*). No special-status wildlife species were observed during the field survey.

Critical habitat for coastal California gnatcatcher (gnatcatcher; *Polioptila californica*; Endangered Species Act (ESA)-threatened; California Species of Special Concern) is located approximately 1.8 miles southeast of the Project site. Given the vegetation present in the Project area and the proposed Project activities, sensitive species that are of concern to CDFW include gnatcatcher and monarch butterfly (monarchs; *Danaus plexippus;* ESA-candidate species).

Comments and Recommendations

CDFW offers the recommendations below to assist MWD in adequately identifying the Project's significant, or potentially significant, direct, and indirect impacts on fish and wildlife (biological) resources. The DEIR should provide adequate and complete disclosure of the Project's potential impacts on biological resources [Pub. Resources Code, §21061;

DocuSign Envelope ID: CE122D57-DAE0-4A57-B7E8-E47E8AC8739C

CEQA Guidelines, §§15003(i), 15151]. CDFW looks forward to commenting on the DEIR when it is available.

Specific Comments

1. Impacts to Gnatcatcher. Due to low quality and scattered assemblage of CSS within the Project area, the Initial Study states that there is no suitable nesting or foraging habitat for gnatcatcher. Gnatcatchers utilize a variety of habitats including chaparral, grassland, and CSS (USFWS 2019). According to the California Natural Diversity Database, gnatcatchers have been observed within a mile of the Project area (CDFW 2024a). Additionally, the Project area is located within the home range of the species and within 2 miles of critical habitat for gnatcatcher (USFWS 2022). Despite the low quality and small area size of CSS present, gnatcatcher may use the habitat on site. Moreover, the United States Fish and Wildlife Service (USFWS) Coastal California Gnatcatcher Presence/Absence Survey Protocol states that surveys should be completed if projects are located within the historic range of the species and contain sage scrub plant communities (USFWS 2019). CDFW recommends that MWD engage in scoping with the USFWS prior to circulation of the DEIR regarding permitting obligations for impacts to gnatcatcher. CDFW also recommends MWD explore Project design alternatives that would avoid, reduce, or restrict disturbances to gnatcatcher and the CSS present on site.

2. Impacts on Monarchs. Monarchs are commonly known to utilize eucalyptus trees as overwintering sites throughout Los Angeles County. Tree trimming and vegetation removal may directly impact any monarch butterflies overwintering in the Project area. Additionally, noise from construction activities may disturb overwintering roosts. Given the presence of eucalyptus trees on site, the DEIR should evaluate the Project's potential direct, indirect, and cumulative impacts on monarchs and overwintering habitat during the construction and operational phase of the Project.

   CDFW recommends MWD retain a qualified biologist to assess the Project area for monarchs and overwintering habitat. The qualified biologist should survey eucalyptus and other trees within the Project area that are suitable for overwintering monarchs. The qualified biologist should conduct multiple surveys for overwintering monarchs where potential overwintering habitat has been identified. Monitoring should be done as frequently as possible during the overwintering season (typically September 15 through March 11) to capture changing distributions through the season and in response to storm events. Findings should be incorporated in the DEIR for public review.

   If the Project would have impacts on monarchs, the DEIR should include measures to first avoid and minimize impacts on monarchs and overwintering habitat. If the Project would result in loss of overwintering habitat, CDFW recommends MWD provide compensatory mitigation so that there is no net loss of overwintering habitat. Mitigation for monarchs should be developed in consultation with USFWS. CDFW recommends MWD also consult the following resources to develop appropriate measures to mitigate the Project's potential impacts on monarchs.

DocuSign Envelope ID: CE122D57-DAE0-4A57-B7E8-E47E8AC8739C

- Western Monarch Butterfly Conservation Plan (WAFWA 2019);
- Overwintering Site Management and Protection (Western Monarch Count 2022);
- Protecting California's Butterfly Groves (Xerces Society 2017);
- Managing Monarch Habitat in the West (Xerces Society 2024a);
- Pollinator-Friendly Native Plant Lists (Xerces Society 2024b); and,
- CDFW's Monarch Butterfly webpage (CDFW 2024b).

Given the candidate listing under the ESA, we also recommend MWD scope the impacts to this species and possible mitigation options with the USFWS.

3. Nesting Birds and Raptors. CDFW recommends the DEIR include a measure to fully avoid impacts to nesting birds and raptors. No construction, ground-disturbing activities (e.g., mobilizing, staging, and excavating), or vegetation removal should occur during the avian breeding season which generally runs from February 1 through September 1 (as early as January 1 for some raptors) to avoid take of birds, raptors, or their eggs. If impacts to nesting birds and raptors cannot be avoided, CDFW recommends the DEIR include measures to minimize impacts on nesting birds and raptors. Prior to starting ground-disturbing activities and vegetation removal, a qualified biologist should conduct nesting bird and raptor surveys to identify nests. The qualified biologist should establish no-disturbance buffers to minimize impacts on those nests. CDFW generally recommends a minimum 100-foot no disturbance buffer around active passerine nests. For raptors, the no disturbance buffer should be expanded to 500 feet. Reductions in the nest buffer may occur in consideration of site-specific features such as ambient levels of human activity, screening vegetation, or other factors.

4. Lighting Design. The Project proposes to replace light fixtures and light bulbs as well as conduct occasional nighttime construction activities. Artificial night lighting can affect plants and wildlife through attraction and disorientation, loss of connectivity, interference with pollination and foraging, and disruption of circadian rhythms and lunar and seasonal cycles (Barrientos et al. 2023). CDFW recommends the DEIR evaluate lighting impacts, especially nighttime lighting, on wildlife species and biological resources within the Project area during the construction and operational phases.

   CDFW also recommends MWD prepare a lighting plan that discusses the criteria used in selecting the types of light fixtures, a schedule detailing the hours various lights will be on, and steps taken by MWD to minimize adverse effects on wildlife species. Methods for minimizing adverse effects of artificial night lighting include lighting only where light is necessary, turning lights off when they are not in use (e.g., motion detector), only using as much light as is needed, directing the light only where it is needed, and using the lowest possible correlated color temperature for the goal of the lighting.

5. Landscaping. The Project proposes landscaping throughout the Project area. CDFW recommends the DEIR provide the Project's landscaping plant palette and replacement tree species list. CDFW recommends MWD use only native species found in naturally occurring vegetation communities within or adjacent to the Project area. MWD should

DocuSign Envelope ID: CE122D57-DAE0-4A57-B7E8-E47E8AC8739C

not plant, seed, or otherwise introduce non-native, invasive plant species to areas that are adjacent to and/or near native habitat areas. Accordingly, CDFW recommends MWD restrict use of any species, particularly 'moderate' or 'high' listed by the California Invasive Plant Council (Cal-IPC 2024). These species are documented to have substantial and severe ecological impacts on physical processes, plant and animal communities, and vegetation structure. CDFW supports planting species of trees, such as oaks (*Quercus* genus), and understory vegetation (e.g., ground cover, subshrubs, and shrubs) that create habitat and provide a food source for birds. CDFW recommends retaining any standing, dead, or dying tree (snags) where possible because snags provide perching and nesting habitat for birds and raptors. Finally, CDFW supports planting species of vegetation with high insect and pollinator value.

General Comments

1. Biological Baseline Assessment. The DEIR should provide an adequate biological resources assessment, including a complete assessment and impact analysis of the flora and fauna within and adjacent to the Project area and where the Project may result in ground disturbance. The assessment and analysis should place emphasis upon identifying endangered, threatened, sensitive, regionally, and locally unique species, and sensitive habitats. Impact analysis will aid in determining any direct, indirect, and cumulative biological impacts, as well as specific mitigation or avoidance measures necessary to offset those impacts. CDFW recommends avoiding any sensitive natural communities found on or adjacent to the Project area. CDFW also considers impacts to SSC a significant direct and cumulative adverse effect without implementing appropriate avoidance and/or mitigation measures. The DEIR should include the following information.

    a) Information on the regional setting is critical to an assessment of environmental impacts, with special emphasis on resources that are rare or unique to the region [CEQA Guidelines, § 15125(c)], or common habitats that have become greatly reduced because of ongoing development. The DEIR should include measures to fully avoid or otherwise offset impacts to Sensitive Natural Communities or native/naturalized communities that support regional sensitive species from Project-related impacts. CDFW considers these communities as threatened habitats having both regional and local significance. In particular, plant communities, alliances, and associations with a state-wide ranking of S1, S2, and S3 should be considered sensitive and declining at the local and regional level. These ranks can be obtained by visiting the Vegetation Classification and Mapping Program - Natural Communities webpage (CDFW 2024c).

    b) A thorough, recent, floristic-based assessment of special status plants and natural communities following CDFW's Protocols for Surveying and Evaluating Impacts to Special Status Native Plant Populations and Sensitive Natural Communities (CDFW 2018). Adjoining habitat areas should be included where Project construction and activities could lead to direct or indirect impacts off site.

DocuSign Envelope ID: CE122D57-DAE0-4A57-B7E8-E47E8AC8739C

c) Floristic, alliance- and/or association-based mapping and vegetation impact assessments conducted at a Project area and within the neighboring vicinity. The Manual of California Vegetation Online should also be used to inform this mapping and assessment (CNPS 2024). Adjoining habitat areas should be included in this assessment if the Project could lead to direct or indirect impacts off site. Habitat mapping at the alliance level will help establish baseline vegetation conditions.

d) A complete, recent, assessment of the biological resources associated with each habitat type on site and within adjacent areas that could also be affected by a Project. California Natural Diversity Database in Sacramento should be contacted to obtain current information on any previously reported sensitive species and habitat. An assessment should include a nine-quadrangle search of the CNDDB to determine a list of species potentially present at a Project area. A lack of records in the CNDDB does not mean that rare, threatened, or endangered plants and wildlife do not occur in the Project area. Field verification for the presence or absence of sensitive species is necessary to provide a complete biological assessment for adequate CEQA review [CEQA Guidelines, § 15003(i)].

e) A complete, recent, assessment of rare, threatened, and endangered, and other sensitive species on site and within the area of potential effect, including California Species of Special Concern and California Fully Protected Species (Fish & G. Code, §§ 3511, 4700, 5050, and 5515). Species to be addressed should include all those which meet the CEQA definition of endangered, rare, or threatened species (CEQA Guidelines, § 15380). Seasonal variations in use of a project area should also be addressed such as wintering, roosting, nesting, and foraging habitat. Focused species-specific surveys, conducted at the appropriate time of year and time of day when the sensitive species are active or otherwise identifiable, may be required if suitable habitat is present. See CDFW's Survey and Monitoring Protocols and Guidelines for established survey protocol for select species. Acceptable species-specific survey procedures may be developed in consultation with CDFW and the USFWS.

f) A recent wildlife and rare plant survey. CDFW generally considers biological field assessments for wildlife to be valid for a 1-year period, and assessments for rare plants may be considered valid for a period of up to 3 years. Some aspects of the proposed Project may warrant periodic updated surveys for certain sensitive taxa, particularly if buildout could occur over a protracted timeframe or in phases.

2. Lake and Streambed Alteration Program. The DEIR should provide stream delineation and analysis of impacts. The delineation should be conducted pursuant to the to the USFWS wetland definition adopted by CDFW (Cowardin et al. 1979). Be advised that some wetland and riparian habitats subject to CDFW's authority may extend beyond the jurisdictional limits of the U.S. Army Corps of Engineers' Section 404 permit and Regional Water Quality Control Board Section 401 Certification. Modifications to a river, creek, or stream in one area may result in bank erosion, channel incision, or drop in water level along that stream outside of the immediate impact area. Therefore, CDFW recommends the DEIR discuss the potential impact to any stream that may be located

DocuSign Envelope ID: CE122D57-DAE0-4A57-B7E8-E47E8AC8739C

within or surrounding the Project site.

a) CDFW has authority over activities in streams and/or lakes that will divert or obstruct the natural flow, or change the bed, channel, or bank (including vegetation associated with the stream or lake) of a river or stream or use material from a streambed. For any such activities, the Project proponent (or "entity") must notify CDFW pursuant to Fish and Game Code Section 1600 *et seq*. CDFW's issuance of a Lake and Streambed Alteration (LSA) Agreement for a project that is subject to CEQA will require CEQA compliance actions by CDFW as a Responsible Agency. As a Responsible Agency, CDFW may consider the environmental document of the local jurisdiction (Lead Agency) for the Project. To minimize additional requirements by CDFW pursuant to section 1600 *et seq.* and/or under CEQA, the environmental document should fully identify the potential impacts to the stream or riparian resources and provide adequate avoidance, mitigation, monitoring, and reporting commitments for issuance of the LSA Agreement. Please visit CDFW's Lake and Streambed Alteration Program webpage for more information (CDFW 2024g).

3. Disclosure. The DEIR should provide an adequate, complete, and detailed disclosure about the effect which a proposed Project is likely to have on the environment (Pub. Resources Code, § 20161; CEQA Guidelines, §15151). Adequate disclosure is necessary so CDFW may provide comments on the adequacy of proposed avoidance, minimization, or mitigation measures, as well as to assess the significance of the specific impact relative to plant and wildlife species impacted (e.g., current range, distribution, population trends, and connectivity).

4. Mitigation Measures. Public agencies have a duty under CEQA to prevent significant, avoidable damage to the environment by requiring changes in projects using feasible alternatives or mitigation measures [CEQA Guidelines, §§ 15002(a)(3), 15021]. Pursuant to CEQA Guidelines section 15126.4, an environmental document "shall describe feasible measures which could mitigate for impacts below a significant level under CEQA."

   a) Level of Detail. Mitigation measures must be feasible, effective, implemented, and fully enforceable/imposed by the Lead Agency through permit conditions, agreements, or other legally binding instruments (Pub. Resources Code, § 21081.6(b); CEQA Guidelines, § 15126.4). A public agency "shall provide the measures that are fully enforceable through permit conditions, agreements, or other measures" (Pub. Resources Code, § 21081.6). CDFW recommends MWD provide mitigation measures that are specific, detailed (i.e., responsible party, timing, specific actions, location), and clear for a measure to be fully enforceable and implemented successfully via a mitigation monitoring and/or reporting program (Pub. Resources Code, § 21081.6; CEQA Guidelines, § 15097). Adequate disclosure is necessary so CDFW may provide comments on the adequacy and feasibility of proposed mitigation measures.

   b) Disclosure of Impacts. If a proposed mitigation measure would cause one or more significant effects, in addition to impacts caused by the Project as proposed, the

DocuSign Envelope ID: CE122D57-DAE0-4A57-B7E8-E47E8AC8739C

DEIR should include a discussion of the effects of proposed mitigation measures [CEQA Guidelines, § 15126.4(a)(1)]. In that regard, the DEIR should provide an adequate, complete, and detailed disclosure about the Project's proposed mitigation measure(s). Adequate disclosure is necessary so CDFW may assess the potential impacts of proposed mitigation measures.

5. Biological Direct, Indirect, and Cumulative Impacts. CDFW recommends providing a thorough discussion of direct, indirect, and cumulative impacts expected to adversely affect biological resources, with specific measures to offset such impacts. The DEIR should address the following.

   a) A discussion regarding Project-related indirect impacts on biological resources, including resources in nearby public lands, open space, adjacent natural habitats, riparian ecosystems, and any designated and/or proposed or existing reserve lands [e.g., preserve lands associated with a Natural Community Conservation Plan (Fish & G. Code, § 2800 et. seq.)]. Impacts on, and maintenance of, wildlife corridor/movement areas, including access to undisturbed habitats in adjacent areas, should be fully evaluated in the DEIR.

   b) A discussion of both the short-term and long-term effects to species population distribution and concentration and alterations of the ecosystem supporting the species impacted [CEQA Guidelines, § 15126.2(a)].

   c) A discussion of potential adverse impacts from lighting, noise, temporary and permanent human activity, and exotic species, and identification of any mitigation measures.

   d) A discussion of Project-related changes on drainage patterns; the volume, velocity, and frequency of existing and post-Project surface flows; polluted runoff; soil erosion and/or sedimentation in streams and water bodies; and post-Project fate of runoff from the Project area. The discussion should also address the potential water extraction activities and the potential resulting impacts on the habitat (if any) supported by the groundwater. Mitigation measures proposed to alleviate such Project impacts should be included.

   e) An analysis of impacts from proposed changes to land use designations and zoning, and existing land use designation and zoning located nearby or adjacent to natural areas that may inadvertently contribute to wildlife-human interactions. A discussion of possible conflicts and mitigation measures to reduce these conflicts should be included in the DEIR.

   f) A cumulative effects analysis, as described under CEQA Guidelines section 15130. General and specific plans, as well as past, present, and anticipated future projects, should be analyzed relative to their impacts on similar plant and wildlife species, habitat, and vegetation communities. If MWD determines that the Project would not have a cumulative impact, the DEIR should indicate why the cumulative impact is not significant. MWD's conclusion should be supported by facts and analyses

DocuSign Envelope ID: CE122D57-DAE0-4A57-B7E8-E47E8AC8739C

[CEQA Guidelines, § 15130(a)(2)] including the amount of development which has occurred within the Project area and adjacent lands, and the amount of development forecasted/expected to occur.

6. Project Description and Alternatives. To enable adequate review and comment on the proposed Project from the standpoint of the protection of fish, wildlife, and plants, CDFW recommends the following information be included in the DEIR:

   a) A complete discussion of the purpose and need for, and description of the proposed Project;

   b) Pursuant to CEQA Guidelines section 15126.6(a), an environmental document "shall describe a reasonable range of potentially feasible alternatives to the Project, or to the location of the Project, which would feasibly attain most of the basic objectives of the Project but would avoid or substantially lessen any of the significant effects of the Project." CEQA Guidelines section 15126.6(f)(2) states if the lead agency concludes that no feasible alternative locations exist, it must disclose the reasons for this conclusion; and,

   c) A range of feasible alternatives to the Project location to avoid or otherwise minimize direct and indirect impacts on sensitive biological resources and wildlife movement areas. CDFW recommends the City select Project designs and alternatives that would avoid or otherwise minimize direct and indirect impacts on biological resources. CDFW also recommends the City consider establishing appropriate setbacks from sensitive and special status biological resources. Setbacks should not be impacted by ground disturbance or hydrological changes from any future Project-related construction, activities, maintenance, and development. As a rule, CDFW recommends reducing or clustering a development footprint to retain unobstructed spaces for vegetation and wildlife and provide connections for wildlife between properties and minimize obstacles to open space.

   Project alternatives should be thoroughly evaluated, even if an alternative would impede, to some degree, the attainment of the Project objectives or would be more costly (CEQA Guidelines, § 15126.6). The DEIR "shall" include sufficient information about each alternative to allow meaningful evaluation, public participation, analysis, and comparison with the proposed Project (CEQA Guidelines, § 15126.6).

   d) Where the Project may impact aquatic and riparian resources, CDFW recommends the City select Project designs and alternatives that would fully avoid impacts to such resources. CDFW also recommends an alternative that would not impede, alter, or otherwise modify existing surface flow, watercourse and meander, and water-dependent ecosystems and natural communities. Project designs should consider elevated crossings to avoid channelizing or narrowing of watercourses. Any modifications to a river, creek, or stream may cause or magnify upstream bank erosion, channel incision, and drop in water level and cause the watercourse to alter its course of flow.

DocuSign Envelope ID: CE122D57-DAE0-4A57-B7E8-E47E8AC8739C

7. CESA. CDFW considers adverse impacts to a species protected by CESA to be significant without mitigation under CEQA. As to CESA, take of any endangered, threatened, candidate species, or CESA-listed plant species that results from the Project is prohibited, except as authorized by state law (Fish & G. Code §§ 2080, 2085; Cal. Code Regs., tit. 14, §786.9). Consequently, if the Project or any Project-related activity will result in take of a species designated as endangered or threatened, or a candidate for listing under CESA, CDFW recommends that the Project proponent seek appropriate take authorization under CESA prior to implementing the Project. Appropriate authorization from CDFW may include an Incidental Take Permit (ITP) or a consistency determination in certain circumstances, among other options [Fish & G. Code, §§ 2080.1, 2081, subds. (b) and (c)]. Early consultation is encouraged, as significant modification to a Project and mitigation measures may be required to obtain a CESA Permit. Revisions to the Fish and Game Code, effective January 1998, may require that CDFW issue a separate CEQA document for the issuance of an ITP unless the Project CEQA document addresses all Project impacts to CESA-listed species and specifies a mitigation monitoring and reporting program that will meet the requirements of an ITP. For these reasons, biological mitigation monitoring and reporting proposals should be of sufficient detail and resolution to satisfy the requirements of a CESA ITP.

8. Compensatory Mitigation. The DEIR should include mitigation measures for adverse Project-related direct or indirect impacts to sensitive plants, animals, and habitats. Mitigation measures should emphasize avoidance and reduction of Project-related impacts. For unavoidable impacts, on-site habitat restoration or enhancement should be discussed in detail. If on-site mitigation is not feasible or would not be biologically viable and therefore not adequately mitigate the loss of biological functions and values, off-site mitigation through acquisition and preservation in perpetuity should be addressed. Areas proposed as mitigation lands should be protected in perpetuity with a conservation easement, financial assurance, and dedicated to a qualified entity for long-term management and monitoring. Under Government Code, section 65967, the Lead Agency must exercise due diligence in reviewing the qualifications of a governmental entity, special district, or nonprofit organization to effectively manage and steward land, water, or natural resources on mitigation lands it approves. Consideration may also be given to the purchase of credits from a conservation bank supporting similar habitat as that being impacted; the bank should have been approved by CDFW.

9. Long-term Management of Mitigation Lands. For proposed preservation and/or restoration, the DEIR should include measures to protect the targeted habitat values from direct and indirect negative impacts in perpetuity. The objective should be to offset the Project-induced qualitative and quantitative losses of wildlife habitat values. Issues that should be addressed include (but are not limited to) restrictions on access, proposed land dedications, monitoring and management programs, control of illegal dumping, water pollution, and increased human intrusion. An appropriate non-wasting endowment should be set aside to provide for long-term management of mitigation lands.

10. Wildlife Friendly Fencing. Fencing could obstruct wildlife movement and result in wildlife injury or mortality due to impalement and entanglement (e.g., chain link

DocuSign Envelope ID: CE122D57-DAE0-4A57-B7E8-E47E8AC8739C

fencing). If the Project would include temporary and/or permanent fencing, prior to preparation of the DEIR, CDFW recommends MWD provide wildlife friendly fencing designs. Fencing designs should be disclosed and evaluated in the DEIR for potential impacts on biological resources and wildlife movement. The DEIR should discuss how fencing proposed for the Project would minimize impacts on biological resources, specifically wildlife movement. CDFW supports the use of wildlife-friendly fencing. Wildlife-friendly fencing should be used and strategically placed in areas of high biological resource value to protect biological resources, habitat, and wildlife movement. CDFW recommends A Landowner's Guide to Wildlife Friendly Fences for information wildlife-friendly fences (MFWP 2012).

11. Translocation/Salvage of Plants and Animal Species. Translocation and transplantation are the process of removing plants and wildlife from one location and permanently moving it to a new location. CDFW generally does not support the use of translocation or transplantation as the primary mitigation strategy for unavoidable impacts to endangered, rare, or threatened plants and animals. Studies have shown that these efforts are experimental and the outcome unreliable. CDFW has found that permanent preservation and management of habitat capable of supporting these species is often a more effective long-term strategy for conserving plants and animals and their habitats.

12. Wetland Resources. CDFW, as described in Fish and Game Code section 703(a), is guided by the Fish and Game Commission's (Commission) policies. The Wetlands Resources policy the Commission "…seek[s] to provide for the protection, preservation, restoration, enhancement, and expansion of wetland habitat in California" (CFGC 2024). Further, it is the policy of the Fish and Game Commission to strongly discourage development in or conversion of wetlands. It opposes, consistent with its legal authority, any development or conversion that would result in a reduction of wetland acreage or wetland habitat values. To that end, the Commission opposes wetland development proposals unless, at a minimum, project mitigation assures there will be 'no net losses of either wetland habitat values or acreage. The Commission strongly prefers mitigation which would achieve expansion of wetland acreage and enhancement of wetland habitat values."

    a) The Wetlands Resources policy provides a framework for maintaining wetland resources and establishes mitigation guidance. CDFW encourages avoidance of wetland resources as a primary mitigation measure and discourages the development or type conversion of wetlands to uplands. CDFW encourages activities that would avoid the reduction of wetland acreage, function, or habitat values. Once avoidance and minimization measures have been exhausted, a project should include mitigation measures to assure a "no net loss" of either wetland habitat values, or acreage, for unavoidable impacts to wetland resources. Conversions include, but are not limited to, conversion to subsurface drains, placement of fill or building of structures within the wetland, and channelization or removal of materials from the streambed. All wetlands and watercourses, whether ephemeral, intermittent, or perennial, should be retained and provided with substantial setbacks, which preserve the riparian and aquatic values and functions benefiting local and transient wildlife populations. CDFW recommends mitigation

DocuSign Envelope ID: CE122D57-DAE0-4A57-B7E8-E47E8AC8739C

measures to compensate for unavoidable impacts be included in the DEIR and these measures should compensate for the loss of function and value.

b) The Fish and Game Commission's Water policy guides CDFW on the quantity and quality of the waters of this State that should be apportioned and maintained respectively so as to produce and sustain maximum numbers of fish and wildlife; to provide maximum protection and enhancement of fish and wildlife and their habitat; encourage and support programs to maintain or restore a high quality of the waters of this State; prevent the degradation thereof caused by pollution and contamination; and, endeavor to keep as much water as possible open and accessible to the public for the use and enjoyment of fish and wildlife. CDFW recommends avoidance of water practices and structures that use excessive amounts of water, and minimization of impacts that negatively affect water quality, to the extent feasible (Fish & G. Code, § 5650).

13. Scientific Collecting Permits. CDFW has the authority to issue permits for the take or possession of wildlife, including mammals; birds, nests, and eggs; reptiles, amphibians, fish, plants; and invertebrates (Fish & G. Code, §§ 1002, 1002.5, 1003). Effective October 1, 2018, a Scientific Collecting Permit is required to monitor project impacts on wildlife resources, as required by environmental documents, permits, or other legal authorizations; and, to capture, temporarily possess, and relocate wildlife to avoid harm or mortality in connection with otherwise lawful activities (Cal. Code Regs., tit. 14, § 650). Please visit CDFW's Scientific Collection Permits webpage for information (CDFW 2024d). Pursuant to the California Code of Regulations, title 14, section 650, the qualified biologist must obtain appropriate handling permits to capture, temporarily possess, and relocate wildlife to avoid harm or mortality in connection with Project construction and activities.

14. Environmental Data. CEQA requires that information developed in environmental impact reports and negative declarations be incorporated into a database (i.e., California Natural Diversity Database) which may be used to make subsequent or supplemental environmental determinations [Pub. Resources Code, § 21003, subd. (e)]. Information on special status species should be submitted to the CNDDB by completing and submitting CNDDB Field Survey Forms (CDFW 2024e). Information on special status native plant populations and sensitive natural communities, the Combined Rapid Assessment and Relevé Form should be completed and submitted to CDFW's Vegetation Classification and Mapping Program (CDFW 2024f).

15. Mitigation Measures. Public agencies have a duty under CEQA to prevent significant, avoidable damage to the environment by requiring changes in projects using feasible alternatives or mitigation measures [CEQA Guidelines, §§ 15002(a)(3), 15021]. Mitigation measures must be feasible, effective, implemented, and fully enforceable by the Lead Agency through permit conditions, agreements, or other legally binding instruments (Pub. Resources Code, § 21081.6(b); CEQA Guidelines, §§ 15126.4, 15041). In preparation of an environmental document, CDFW recommends MWD prepare mitigation measures that are specific, detailed (i.e., responsible party, timing, specific actions, location), and clear so that a measure is fully enforceable and

DocuSign Envelope ID: CE122D57-DAE0-4A57-B7E8-E47E8AC8739C

implemented successfully via a mitigation, monitoring, and reporting program (CEQA Guidelines, § 15097; Pub. Resources Code, § 21081.6).

Conclusion

We appreciate the opportunity to comment on the NOP for the Garvey Reservoir Rehabilitation Project to assist MWD in identifying and mitigating Project impacts on biological resources. If you have any questions or comments regarding this letter, please contact Julisa Portugal, Environmental Scientist, at Julisa.Portugal@wildlife.ca.gov or (562) 330-7563.

Sincerely,

DocuSigned by:
5991E19EF8094C3...

Victoria Tang
Environmental Program Manager
South Coast Region

EC: **California Department of Fish and Wildlife**

Victoria Tang
Victoria.Tang@wildlife.ca.gov

Jennifer Turner
Jennifer.Turner@wildlife.ca.gov

Cindy Hailey
Cindy.Hailey@wildlife.ca.gov

CEQA Program Coordinator
CEQACommentLetters@wildlife.ca.gov

Office of Planning and Research

State Clearinghouse
State.Clearinghouse@opr.ca.gov

References

Barrientos, R., Vickers, W., Longcore, T., Abelson, E. S., Dellinger, J., Waetjen, D. P., & Shilling, F. M. 2023. Nearby night lighting, rather than sky glow, is associated with habitat selection by a top predator in human-dominated landscapes. *Philosophical Transactions of the Royal Society B*, *378* (1892), 20220370.

DocuSign Envelope ID: CE122D57-DAE0-4A57-B7E8-E47E8AC8739C

[CDFW] California Department of Fish and Wildlife. 2018. Protocols for Surveying and Evaluating Impacts to Special Status Native Plant Populations and Natural Communities. Available at: https://nrm.dfg.ca.gov/FileHandler.ashx?DocumentID=18959&inline

[CDFW] California Department of Fish and Wildlife. 2024a. California Natural Diversity Database. Available at: https://wildlife.ca.gov/Data/CNDDB

[CDFW] California Department of Fish and Wildlife. 2024b. Monarch Butterfly. Available at: https://wildlife.ca.gov/Conservation/Invertebrates/Monarch-Butterfly

[CDFW] California Department of Fish and Wildlife. 2024c. Vegetation Classification and Mapping Program Natural Communities. Available at: https://wildlife.ca.gov/Data/VegCAMP/Natural-Communities

[CDFW] California Department of Fish and Wildlife. 2024d. Scientific Collecting Permit. Available at: https://wildlife.ca.gov/Licensing/Scientific-Collecting#53949678

[CDFW] California Department of Fish and Wildlife. 2024e. Submitting Data to the CNDDB. Available from: https://wildlife.ca.gov/Data/CNDDB/Submitting-Data

[CDFW] California Department of Fish and Wildlife. 2024f. Natural Communities - Submitting Information. Combined Rapid Assessment and Revele Form. Available at: https://wildlife.ca.gov/Data/VegCAMP/Natural-Communities/Submit

[CDFW] California Department of Fish and Wildlife. 2024. Lake and Streambed Alteration Program. Available at: https://wildlife.ca.gov/Conservation/Environmental-Review/LSA

[CFGC] California Fish and Game Commission. 2024. Wetland Resources. Available at: https://fgc.ca.gov/About/Policies/Miscellaneous#Wetlands

[Cal-IPC] California Invasive Plant Council. 2024. The Cal-IPC Inventory. Available at: https://www.cal-ipc.org/plants/inventory/

[CNPS] California Native Plant Society. 2024. A Manual of California Vegetation Online. Available at: https://vegetation.cnps.org/

[MFWP] Montana Fish, Wildlife and Parks. 2012. A Landowner's Guide to Wildlife Friendly Fences: How to Build Fence with Wildlife in Mind. Second Edition Revised and Updated. Available from: https://nrm.dfg.ca.gov/FileHandler.ashx?DocumentID=134713&inline

[USFWS] United States Fish and Wildlife Service. 2019. Coastal California Gnatcatcher Presence/Absence Survey Protocol. Available at: https://www.fws.gov/media/coastal-california-gnatcatcher-presenceabsence-survey-protocol

DocuSign Envelope ID: CE122D57-DAE0-4A57-B7E8-E47E8AC8739C

[USFWS] United States Fish and Wildlife Service. 2022. Critical Habitat for Threatened and Endangered Species. Available at: https://fws.maps.arcgis.com/home/webmap/viewer.html?webmap=9d8de5e265ad4fe09893cf75b8dbfb77

[WAFWA] Western Association of Fish and Wildlife Agencies. 2019. Western Monarch Butterfly Conservation Plan 2019-2069. Available from: https://wafwa.org/wpdm-package/western-monarch-butterfly-conservation-plan-2019-2069/?ind=1602171186650&filename=WAFWA_Monarch_Conservation_Plan.pdf&wpdmdl=13048&refresh=60f9defee81e21626988286

Western Monarch Count. 2022. Overwintering Site Management and Protection. Available from: https://www.westernmonarchcount.org/overwintering-site-management-and-protection/

[Xerces Society] Xerces Society for Invertebrate Conservation. 2017. Protecting California's Butterfly Groves. Management Guidelines for Monarch Butterfly Overwintering Habitat. Available from: https://www.westernmonarchcount.org/wp-content/uploads/2014/11/2017-040_ProtectingCaliforniaButterflyGroves.pdf

[Xerces Society] Xerces Society for Invertebrate Conservation. 2024a. Managing Monarch Habitat in the West. Available from: https://xerces.org/monarchs/western-monarch-conservation/habitat

[Xerces Society] Xerces Society for Invertebrate Conservation. 2024b. Pollinator-Friendly Native Plant Lists. Available from: https://xerces.org/pollinator-conservation/pollinator-friendly-plant-lists

DocuSign Envelope ID: 74F1127E-B943-40D8-B0C0-2C0FA053B31C

STATE OF CALIFORNIA – CALIFORNIA NATURAL RESOURCES AGENCY

GAVIN NEWSOM, *Governor*

DEPARTMENT OF WATER RESOURCES
P.O. BOX 942836
SACRAMENTO, CA 94236-0001
(916) 653-5791

February 6, 2024

Ms. Michelle Morrison, Senior Environmental Specialist
Metropolitan Water District of Southern California
700 N. Alameda Street
Los Angeles, California 90012

Garvey Reservoir Rehabilitation Project
SCH # 2024010394
Los Angeles County

Dear Ms. Morrison:

The Division of Safety of Dams (DSOD) has reviewed the Proposed Initial Study (Study) for the Garvey Reservoir Rehabilitation Project submitted by the Metropolitan Water District of Southern California (MWD), dated January 2024. The proposed project includes the replacement/rehabilitation of the reservoir cover and liner, rehabilitation of the I/O tower, replacement of valves within the junction structure, updating the facility electrical system, replacing the standby generator, upgrades to the surge tank telemetry, remodeling of the Administration Building and Water Quality Laboratory, and the construction of a new pump station.

An insufficient amount of information is included in the Study to make an accurate jurisdictional determination with regards to the Garvey Reservoir Rehabilitation Project, and it is unclear whether this project will be subject to State jurisdiction for dam safety. Therefore, the MWD needs to submit preliminary plans so that DSOD can make a jurisdictional determination.

In the event the project will result in a State jurisdictional structure, a construction application, together with plans, specifications, and the appropriate filing fees must be filed with this Division prior to proceeding with the project. If an application is required, all dam safety related issues must be satisfactorily addressed prior to our approval of the application and all work must be performed under the direction of a Civil Engineer registered in California. Erik Malvick, our Design Engineering Branch Manager, is responsible for the application process and can be reached at (916) 820-7820.

If you have any questions or need additional information, you may contact Area Engineer Travis Chatters at (916) 565-7829 or me at (916) 565-7827.

Sincerely,

Brandon Cruz

Brandon Cruz, P.E., Regional Engineer
Southern Region
Field Engineering Branch
Division of Safety of Dams

cc: Governor's Office of Planning and Research
State Clearinghouse
state.clearinghouse@opr.ca.gov

NATIVE AMERICAN HERITAGE COMMISSION

CHAIRPERSON
Reginald Pagaling
Chumash

VICE-CHAIRPERSON
Buffy McQuillen
Yokoyo Pomo, Yuki, Nomlaki

SECRETARY
Sara Dutschke
Miwok

PARLIAMENTARIAN
Wayne Nelson
Luiseño

COMMISSIONER
Isaac Bojorquez
Ohlone-Costanoan

COMMISSIONER
Stanley Rodriguez
Kumeyaay

COMMISSIONER
Laurena Bolden
Serrano

COMMISSIONER
Reid Milanovich
Cahuilla

COMMISSIONER
Vacant

EXECUTIVE SECRETARY
Raymond C. Hitchcock
Miwok, Nisenan

NAHC HEADQUARTERS
1550 Harbor Boulevard
Suite 100
West Sacramento,
California 95691
(916) 373-3710
nahc@nahc.ca.gov
NAHC.ca.gov

January 26, 2024

Michelle Morrison
Metropolitan Water District of Southern California
PO Box 54135
Los Angeles, CA 90054

Re: 2024010394, Garvey Reservoir Rehabilitation Project, Los Angeles County

Dear Ms. Morrison:

The Native American Heritage Commission (NAHC) has received the Notice of Preparation (NOP), Draft Environmental Impact Report (DEIR) or Early Consultation for the project referenced above. The California Environmental Quality Act (CEQA) (Pub. Resources Code §21000 et seq.), specifically Public Resources Code §21084.1, states that a project that may cause a substantial adverse change in the significance of a historical resource, is a project that may have a significant effect on the environment. (Pub. Resources Code § 21084.1; Cal. Code Regs., tit.14, §15064.5 (b) (CEQA Guidelines §15064.5 (b)). If there is substantial evidence, in light of the whole record before a lead agency, that a project may have a significant effect on the environment, an Environmental Impact Report (EIR) shall be prepared. (Pub. Resources Code §21080 (d); Cal. Code Regs., tit. 14, § 5064 subd.(a)(1) (CEQA Guidelines §15064 (a)(1)). In order to determine whether a project will cause a substantial adverse change in the significance of a historical resource, a lead agency will need to determine whether there are historical resources within the area of potential effect (APE).

CEQA was amended significantly in 2014. Assembly Bill 52 (Gatto, Chapter 532, Statutes of 2014) (AB 52) amended CEQA to create a separate category of cultural resources, "tribal cultural resources" (Pub. Resources Code §21074) and provides that a project with an effect that may cause a substantial adverse change in the significance of a tribal cultural resource is a project that may have a significant effect on the environment. (Pub. Resources Code §21084.2). Public agencies shall, when feasible, avoid damaging effects to any tribal cultural resource. (Pub. Resources Code §21084.3 (a)). **AB 52 applies to any project for which a notice of preparation, a notice of negative declaration, or a mitigated negative declaration is filed on or after July 1, 2015.** If your project involves the adoption of or amendment to a general plan or a specific plan, or the designation or proposed designation of open space, on or after March 1, 2005, it may also be subject to Senate Bill 18 (Burton, Chapter 905, Statutes of 2004) (SB 18). **Both SB 18 and AB 52 have tribal consultation requirements.** If your project is also subject to the federal National Environmental Policy Act (42 U.S.C. § 4321 et seq.) (NEPA), the tribal consultation requirements of Section 106 of the National Historic Preservation Act of 1966 (154 U.S.C. 300101, 36 C.F.R. §800 et seq.) may also apply.

The NAHC recommends consultation with California Native American tribes that are traditionally and culturally affiliated with the geographic area of your proposed project as early as possible in order to avoid inadvertent discoveries of Native American human remains and best protect tribal cultural resources. Below is a brief summary of portions of AB 52 and SB 18 as well as the NAHC's recommendations for conducting cultural resources assessments.

Consult your legal counsel about compliance with AB 52 and SB 18 as well as compliance with any other applicable laws.

AB 52

AB 52 has added to CEQA the additional requirements listed below, along with many other requirements:

1. Fourteen Day Period to Provide Notice of Completion of an Application/Decision to Undertake a Project: Within fourteen (14) days of determining that an application for a project is complete or of a decision by a public agency to undertake a project, a lead agency shall provide formal notification to a designated contact of, or tribal representative of, traditionally and culturally affiliated California Native American tribes that have requested notice, to be accomplished by at least one written notice that includes:

- **a.** A brief description of the project.
- **b.** The lead agency contact information.
- **c.** Notification that the California Native American tribe has 30 days to request consultation. (Pub. Resources Code §21080.3.1 (d)).
- **d.** A "California Native American tribe" is defined as a Native American tribe located in California that is on the contact list maintained by the NAHC for the purposes of Chapter 905 of Statutes of 2004 (SB 18). (Pub. Resources Code §21073).

2. Begin Consultation Within 30 Days of Receiving a Tribe's Request for Consultation and Before Releasing a Negative Declaration, Mitigated Negative Declaration, or Environmental Impact Report: A lead agency shall begin the consultation process within 30 days of receiving a request for consultation from a California Native American tribe that is traditionally and culturally affiliated with the geographic area of the proposed project. (Pub. Resources Code §21080.3.1, subds. (d) and (e)) and prior to the release of a negative declaration, mitigated negative declaration or Environmental Impact Report. (Pub. Resources Code §21080.3.1(b)).

- **a.** For purposes of AB 52, "consultation shall have the same meaning as provided in Gov. Code §65352.4 (SB 18). (Pub. Resources Code §21080.3.1 (b)).

3. Mandatory Topics of Consultation If Requested by a Tribe: The following topics of consultation, if a tribe requests to discuss them, are mandatory topics of consultation:

- **a.** Alternatives to the project.
- **b.** Recommended mitigation measures.
- **c.** Significant effects. (Pub. Resources Code §21080.3.2 (a)).

4. Discretionary Topics of Consultation: The following topics are discretionary topics of consultation:

- **a.** Type of environmental review necessary.
- **b.** Significance of the tribal cultural resources.
- **c.** Significance of the project's impacts on tribal cultural resources.
- **d.** If necessary, project alternatives or appropriate measures for preservation or mitigation that the tribe may recommend to the lead agency. (Pub. Resources Code §21080.3.2 (a)).

5. Confidentiality of Information Submitted by a Tribe During the Environmental Review Process: With some exceptions, any information, including but not limited to, the location, description, and use of tribal cultural resources submitted by a California Native American tribe during the environmental review process shall not be included in the enviranmental document or otherwise disclosed by the lead agency or any other public agency to the public, consistent with Government Code §6254 (r) and §6254.10. Any information submitted by a California Native American tribe during the consultation or environmental review process shall be published in a confidential appendix to the environmental document unless the tribe that provided the information consents, in writing, to the disclosure of some or all of the information to the public. (Pub. Resources Code §21082.3 (c)(1)).

6. Discussion of Impacts to Tribal Cultural Resources in the Environmental Document: If a project may have a significant impact on a tribal cultural resource, the lead agency's environmental document shall discuss both of the following:

- **a.** Whether the proposed project has a significant impact on an identified tribal cultural resource.
- **b.** Whether feasible alternatives or mitigation measures, including those measures that may be agreed to pursuant to Public Resources Code §21082.3, subdivision (a), avoid or substantially lessen the impact on the identified tribal cultural resource. (Pub. Resources Code §21082.3 (b)).

7. Conclusion of Consultation: Consultation with o tribe shall be considered concluded when either of the following occurs:

a. The parties agree to measures to mitigate or avoid a significant effect, if a significant effect exists, on a tribol cultural resource; or

b. A party, acting in good faith and after reasonable effort, concludes that mutual agreement cannot be reached. (Pub. Resources Cade §21080.3.2 (b)).

8. Recommending Mitigation Measures Agreed Upon in Consultation in the Environmental Document: Any mitigation measures agreed upon in the consultation canducted pursuant to Public Resources Code §21080.3.2 shall be recommended for inclusion in the environmental document and in an adopted mitigation monitaring and reporting program, if determined to avoid or lessen the impact pursuant to Public Resources Code §21082.3, subdivision (b), paragraph 2, and shall be fully enforceable. (Pub. Resources Code §21082.3 (a)).

9. Required Consideration of Feasible Mitigation: If mitigation measures recommended by the staff of the lead agency as a result of the consultation process are not included in the environmental document or if there are no agreed upon mitigation measures at the conclusion of consultation, or if consultation does not occur, and if substantial evidence demonstrates that a project will cause a significant effect to a tribal cultural resource, the lead agency shall consider feasible mitigation pursuant to Public Resources Code §21084.3 (b). (Pub. Resources Code §21082.3 (e)).

10. Examples of Mitigation Measures That, If Feasible, May Be Considered to Avoid or Minimize Significant Adverse Impacts to Tribal Cultural Resources:

a. Avoidonce and preservation of the resources in place, including, but not limited to:

i. Planning and construction to avoid the resources and protect the cultural and natural context.

ii. Planning greenspace, parks, or other open space, to incorporate the resources with culturally appropriate protection and management criteria.

b. Treating the resource with culturally appropriate dignity, taking into account the tribal cultural values and meaning of the resource, including, but not limited to, the following:

i. Protecting the cultural character and integrity of the resource.

ii. Protecting the traditional use of the resource.

iii. Protecting the confidentiality of the resource.

c. Permanent conservation easements or other interests in real property, with culturally appropriate management criteria for the purposes of preserving or utilizing the resources or places.

d. Protecting the resource. (Pub. Resource Code §21084.3 (b)).

e. Please note that a federally recognized California Native American tribe or a non-federally recognized California Native American tribe that is on the contact list maintained by the NAHC to protect a California prehistoric, archaeological, cultural, spiritual, or ceremonial place may acquire and hold conservation easements if the conservation easement is voluntarily conveyed. (Civ. Code §815.3 (c)).

f. Please note that it is the policy of the stote that Native American remains and associated grave artifacts shall be repatriated. (Pub. Resources Code §5097.991).

11. Prerequisites for Certifying an Environmental Impact Report or Adopting a Mitigated Negative Declaration or Negative Declaration with a Significant Impact on an Identified Tribal Cultural Resource: An Environmental Impact Report may not be certified, nor may a mitigated negative declaration or a negative declaration be adopted unless one of the following occurs:

a. The consultation process between the tribes and the lead agency has occurred as provided in Public Resources Code §21080.3.1 and §21080.3.2 and concluded pursuant to Public Resources Code §21080.3.2.

b. The tribe that requested consultation failed to provide comments to the lead agency or otherwise failed to engage in the consultation process.

c. The lead agency provided notice of the project to the tribe in compliance with Public Resources Code §21080.3.1 (d) and the tribe failed to request consultation within 30 days. (Pub. Resources Code §21082.3 (d)).

The NAHC's PowerPoint presentation titled, "Tribal Consultation Under AB 52: Requirements and Best Practices" may be found online at: http://nahc.ca.gov/wp-content/uploads/2015/10/AB52TribalConsultation_CalEPAPDF.pdf

SB 18

SB 18 applies to local governments and requires local governments to contact, provide notice to, refer plans to, and consult with tribes prior to the adoption or amendment of a general plan or a specific plan, or the designation of open space. (Gov. Code §65352.3). Local governments should consult the Governor's Office of Planning and Research's "Tribal Consultation Guidelines," which can be found online at: https://www.opr.ca.gov/docs/09_14_05_Updated_Guidelines_922.pdf.

Some of SB 18's provisions include:

1. Tribal Consultation: If a local government considers a proposal to adopt or amend a general plan or a specific plan, or to designate open space it is required to contact the appropriate tribes identified by the NAHC by requesting a "Tribal Consultation List." If a tribe, once contacted, requests consultation the local government must consult with the tribe on the plan proposal. **A tribe has 90 days from the date of receipt of notification to request consultation unless a shorter timeframe has been agreed to by the tribe.** (Gov. Code §65352.3 (a)(2)).

2. No Statutory Time Limit on SB 18 Tribal Consultation. There is no statutory time limit on SB 18 tribal consultation.

3. Confidentiality: Consistent with the guidelines developed and adopted by the Office of Planning and Research pursuant to Gov. Code §65040.2, the city or county shall protect the confidentiality of the information concerning the specific identity, location, character, and use of places, features and objects described in Public Resources Code §5097.9 and §5097.993 that are within the city's or county's jurisdiction. (Gov. Code §65352.3 (b)).

4. Conclusion of SB 18 Tribal Consultation: Consultation should be concluded at the point in which:

- **a.** The parties to the consultation come to a mutual agreement concerning the appropriate measures for preservation or mitigation; or
- **b.** Either the local government or the tribe, acting in good faith and after reasonable effort, concludes that mutual agreement cannot be reached concerning the appropriate measures of preservation or mitigation. (Tribal Consultation Guidelines, Governor's Office of Planning and Research (2005) at p. 18).

Agencies should be aware that neither AB 52 nor SB 18 precludes agencies from initiating tribal consultation with tribes that are traditionally and culturally affiliated with their jurisdictions before the timeframes provided in AB 52 and SB 18. For that reason, we urge you to continue to request Native American Tribal Contact Lists and "Sacred Lands File" searches from the NAHC. The request forms can be found online at: http://nahc.ca.gov/resources/forms/.

NAHC Recommendations for Cultural Resources Assessments

To adequately assess the existence and significance of tribal cultural resources and plan for avoidance, preservation in place, or barring both, mitigation of project-related impacts to tribal cultural resources, the NAHC recommends the following actions:

1. Contact the appropriate regional California Historical Research Information System (CHRIS) Center (https://ohp.parks.ca.gov/?page_id=30331) for an archaeological records search. The records search will determine:

- **a.** If part or all of the APE has been previously surveyed for cultural resources.
- **b.** If any known cultural resources have already been recorded on or adjacent to the APE.
- **c.** If the probability is low, moderate, or high that cultural resources are located in the APE.
- **d.** If a survey is required to determine whether previously unrecorded cultural resources are present.

2. If an archaeological inventory survey is required, the final stage is the preparation of a professional report detailing the findings and recommendations of the records search and field survey.

- **a.** The final report containing site forms, site significance, and mitigation measures should be submitted immediately to the planning department. All information regarding site locations, Native American human remains, and associated funerary objects should be in a separate confidential addendum and not be made available for public disclosure.
- **b.** The final written report should be submitted within 3 months after work has been completed to the appropriate regional CHRIS center.

3. Contact the NAHC for:

a. A Sacred Lands File search. Remember that tribes do not always record their sacred sites in the Sacred Lands File, nor are they required to do so. A Sacred Lands File search is not a substitute for consultation with tribes that are traditionally and culturally affiliated with the geographic area of the project's APE.

b. A Native American Tribal Consultation List of appropriate tribes for consultation concerning the project site and to assist in planning for avoidance, preservation in place, or, failing both, mitigation measures.

4. Remember that the lack of surface evidence of archaeological resources (including tribal cultural resources) does not preclude their subsurface existence.

a. Leod agencies should include in their mitigation and monitoring reporting program plan provisions for the identification and evaluation of inodvertently discovered archaeological resources per Cal. Code Regs., tit. 14, §15064.5(f) (CEQA Guidelines §15064.5(f)). In areas of identified archaeologicol sensitivity, a certified orchaeologist and a culturally offiliated Native American with knowledge of cultural resources should monitor oll ground-disturbing activities.

b. Lead agencies should include in their mitigation and monitoring reporting program plans provisions for the disposition of recovered culturol items that are not burial associoted in consultation with culturolly affiliated Native Americans.

c. Lead agencies should include in their mitigation ond monitoring reporting program plans provisions for the treotment and disposition of inadvertently discovered Notive American humon remains. Heolth and Safety Code §7050.5, Public Resources Code §5097.98, and Cal. Code Regs., tit. 14, §15064.5, subdivisions (d) and (e) (CEQA Guidelines §15064.5, subds. (d) ond (e)) oddress the processes to be followed in the event of an inadvertent discovery of ony Notive American human remains and associated grave goods in a locotion other than a dedicated cemetery.

If you have any questions or need additionol information, please contact me at my email address: Andrew.Green@nahc.ca.gov.

Sincerely,

Andrew Green

Andrew Green
Culturol Resources Anolyst

cc: State Clearinghouse

South Coast
Air Quality Management District
21865 Copley Drive, Diamond Bar, CA 91765-4178
(909) 396-2000 • www.aqmd.gov

SENT VIA E-MAIL: February 16, 2024
EP@mwdh2o.com
Michelle Morrison, Senior Environmental Specialist
The Metropolitan Water District of Southern California
Environmental Planning Section
P.O. Box 54153
Los Angeles, California 90054-0153

Notice of Preparation of a Draft Environmental Impact Report for the Garvey Reservoir Rehabilitation Project

South Coast Air Quality Management District (South Coast AQMD) staff appreciate the opportunity to comment on the above-mentioned document. Our comments are recommendations on the analysis of potential air quality impacts from the Proposed Project that should be included in the Draft Environmental Impact Report (EIR). Please send a copy of the Draft EIR upon its completion and public release directly to South Coast AQMD as copies of the Draft EIR submitted to the State Clearinghouse are not forwarded. **In addition, please send all appendices and technical documents related to the air quality, health risk, and greenhouse gas analyses (electronic versions of all emission calculation spreadsheets, air quality modeling, and health risk assessment input and output files, not PDF files). Any delays in providing all supporting documentation for our review will require additional review time beyond the end of the comment period.**

Responsible Agency and South Coast AQMD Permits

CEQA Guidelines Section 15096 sets forth specific procedures for a Responsible Agency, including making a decision on the adequacy of the CEQA document for use as part of the process for conducting a review of the Proposed Project and issuing discretionary approvals. Moreover, it is important to note that if a Responsible Agency determines that a CEQA document is not adequate to rely upon for its discretionary approvals, the Responsible Agency must take further actions listed in CEQA Guideline Section 15096(e), which could have the effect of delaying the implementation of the Proposed Project. In its role as CEQA Responsible Agency, the South Coast AQMD is obligated to ensure that the CEQA document prepared for this Proposed Project contains a sufficient project description and analysis to be relied upon in order to issue any discretionary approvals that may be needed for air permits.

For these reasons, the final CEQA document should be revised to include a discussion about any and all new stationary and portable equipment requiring South Coast AQMD air permits, provide the evaluation of their air quality and greenhouse gas impacts, and identify South Coast AQMD as a Responsible Agency for the Proposed Project as this information will be relied upon as the basis for the permit conditions and emission limits for the air permit(s). Please contact South Coast AQMD's Engineering and Permitting staff at (909) 396-3385 for questions regarding what types of equipment would require air permits. For more general information on permits, please visit South Coast AQMD's webpage at http://www.aqmd.gov/home/permits.

CEQA Air Quality Analysis

Staff recommends that the Lead Agency use South Coast AQMD's CEQA Air Quality Handbook and website[1] as guidance when preparing the air quality and greenhouse gas analyses. It is also recommended that the Lead Agency use the CalEEMod[2] land use emissions software, which can estimate pollutant emissions from typical land use development and is the only software model maintained by the California Air Pollution Control Officers Association.

South Coast AQMD has developed both regional and localized significance thresholds. South Coast AQMD staff recommends that the Lead Agency quantify criteria pollutant emissions and compare the emissions to South Coast AQMD's CEQA regional pollutant emissions significance thresholds[3] and localized significance thresholds (LSTs)[4] to determine the Proposed Project's air quality impacts. The localized analysis can be conducted by either using the LST screening tables or performing dispersion modeling.

The Lead Agency should identify any potential adverse air quality impacts that could occur from all phases of the Proposed Project and all air pollutant sources related to the Proposed Project. Air quality impacts from both construction (including demolition, if any) and operations should be calculated. Construction-related air quality impacts typically include, but are not limited to, emissions from the use of heavy-duty equipment from grading, earth-loading/unloading, paving, architectural coatings, off-road mobile sources (e.g., heavy-duty construction equipment) and on-road mobile sources (e.g., construction worker vehicle trips, material transport trips, and hauling trips). Operation-related air quality impacts may include, but are not limited to, emissions from stationary sources (e.g., boilers and air pollution control devices), area sources (e.g., solvents and coatings), and vehicular trips (e.g., on- and off-road tailpipe emissions and entrained dust). Air quality impacts from indirect sources, such as sources that generate or attract vehicular trips, should be included in the analysis. Furthermore, emissions from the overlapping construction and operational activities should be combined and compared to South Coast AQMD's regional air quality CEQA *operational* thresholds to determine the level of significance.

Mitigation Measures

In the event that the Proposed Project results in significant adverse air quality impacts, CEQA requires that all feasible mitigation measures that go beyond what is required by law be utilized to minimize these impacts. Any impacts resulting from mitigation measures must also be analyzed. Several resources to assist the Lead Agency with identifying potential mitigation measures for the Proposed Project include South Coast AQMD's CEQA Air Quality Handbook,[5] South Coast AQMD's Mitigation Monitoring and Reporting Plan for the 2022 Air Quality Management Plan,[6] and Southern California Association of Government's Mitigation Monitoring and Reporting Plan for the 2020-2045 Regional Transportation Plan/Sustainable Communities Strategy.[7].

---

[1] South Coast AQMD's CEQA Handbook and other resources for preparing air quality analyses can be found at: http://www.aqmd.gov/home/rules-compliance/ceqa/air-quality-analysis-handbook.

[2] CalEEMod is available free of charge at: www.caleemod.com.

[3] South Coast AQMD's CEQA regional pollutant emissions significance thresholds can be found at: http://www.aqmd.gov/docs/default-source/ceqa/handbook/scaqmd-air-quality-significance-thresholds.pdf.

[4] South Coast AQMD's guidance for performing a localized air quality analysis can be found at: http://www.aqmd.gov/home/regulations/ceqa/air-quality-analysis-handbook/localized-significance-thresholds.

[5] https://www.aqmd.gov/home/rules-compliance/ceqa/air-quality-analysis-handbook

[6] South Coast AQMD's 2022 Air Quality Management Plan can be found at: http://www.aqmd.gov/home/air-quality/clean-air-plans/air-quality-mgt-plan (Chapter 4 - Control Strategy and Implementation).

[7] Southern California Association of Governments' 2020-2045 RTP/SCS can be found at: https://www.connectsocal.org/Documents/PEIR/certified/Exhibit-A_ConnectSoCal_PEIR.pdf.

South Coast AQMD staff is available to work with the Lead Agency to ensure that air quality, greenhouse gas, and health risk impacts from the Proposed Project are accurately evaluated and mitigated where feasible. If you have any questions regarding this letter, please contact me at swang1@aqmd.gov.

Sincerely,

Sam Wang

Sam Wang
Program Supervisor, CEQA IGR
Planning, Rule Development & Implementation

SW
LAC240124-02
Control Number

From: Andy Tsang [redacted]
Sent: Friday, February 16, 2024 9:10 AM
To: EPT <ep@mwdh2o.com>
Subject: Garvey Reservoir Rehabilitation Project

I wish to be placed on the distribution list to receive the Notice of Availability of the Draft EIR. Thank you.

I find "Potentially Significant" environmental impacts of this proposed Project to be of concern to my family. I would like to be kept up to date.

Furthermore, this Notice of Preparation of a Draft Environmental Impact Report" may not be easily understood by most residents. Sounds like it was drafted by attorneys. This doesn't help much of the residents around the area to fully understand the letter. Why not also explain in layman's terms? The reason why I feel I have to point this out is because there are may be a significant amount of residents that just don't entirely understand this Notice. I had to read it carefully a couple of times. Others may just dispose of this letter simply because it's too lengthy and the words used are too arduous to fully comprehend.

Sending these long-winded "Notices" are laughable since most of us will probably just toss it in the trash. Useless.

Andy Tsang, RN
[redacted]

January 22, 2024

Ms. Michelle Morrison
The Metropolitan Water District of Southern California
Environmental Planning Section
P.O. Box 54153
Los Angeles, CA 90054-0153

Dear Ms. Morrison,

I am writing concerning the "Garvey Reservoir Rehabilitation Project." We recently purchased the house located at 425 Van Buren Dr., in Monterey Park. Our backyard boarders the Garvey Reservoir, We are very thankful to be living in this home.

We moved here in November of 2023. Every day, 24 hours a day, water flows from the Garvey Reservoir between our home and our neighbors home (just east to us) down the gutter in front of our home and further down Van Buren Dr until it drains at the corner of Fulton and Van Buren. It <u>has</u> <u>not</u> <u>stopped</u> <u>flowing</u> since we moved here! Due to the continual flow of water, algae has grown making for a slippery surface on the gutter.

My daughter slipped and fell a few days ago which resulted in a bruised knee. My wife also has slipped and almost fallen along with a friend who recently visited us. This is very dangerous! A slip and fall could cause serious injury, and even death if a person hits their head on the street or sidewalk. Of course this would also result in a very large lawsuit against the Metropolitan Water District.

The water flow also concerns me because it seems to be a waste of water. As you know we have some years of very low rainfall and as a result we are told to conserve water. It can become a constant barrage of public notices telling people to conserve water. Why is this water being wasted? Since we moved here there has to have been many thousands of gallons of water lost - perhaps even millions of gallons.

Can you please resolve this dangerous issue as soon as possible, even before the Garvey Reservoir Rehabilitation Project.

Sincerely,

Daniel Allen

Daniel Allen

[redacted]

February 1, 2024

Ms. Michelle Morrison

RESIDENTS COMMENTS,

1. RAINSTORM: RAINWATER RUNOFF AND MUDSLIDES.

2. DURING CONTRUCTION: AIR QUALITY AND NOISE.

3. TRANSPORTATION: AROUND RESERVOIR NORTH, EAST, WEST, AND SOUTH.

James J. Miyashiro

[redacted]

Appendix B

Air Quality and Greenhouse Gas Emissions Study

Garvey Reservoir Rehabilitation Project

Air Quality and Greenhouse Gas Emissions Study

prepared for

The Metropolitan Water District of Southern California
700 North Alameda Street
Los Angeles, California 90012

prepared by

Rincon Consultants, Inc.
250 East 1st Street, Suite 1400
Los Angeles, California 90012

April 2024

RINCON CONSULTANTS, INC. SINCE 1994

Table of Contents

1 Project Description 1
1.1 Introduction 1
1.2 Project Summary 1
2 Air Quality Background and Regulations 10
2.1 Air Quality Background 10
2.2 Air Quality Regulations 13
2.3 Existing Regional and Local Air Quality 17
3 Greenhouse Gas Emissions Background and Regulations 19
3.1 Greenhouse Gas Emissions Background 19
3.2 Greenhouse Gas Regulations 20
4 Methodology and Significance Thresholds 26
4.1 Methodology 26
4.2 Significance Thresholds 33
5 Air Quality Impact Analysis 37
6 Greenhouse Gas Impact Analysis 49
7 References 52

Tables

Table 1 Federal and State Ambient Air Quality Standards for Criteria Pollutants 14
Table 2 Ambient Air Quality at Nearest Monitoring Stations (2020 – 2022) 17
Table 3 Construction Schedule 26
Table 4 Construction Equipment List 27
Table 5 SCAQMD Regional Air Quality Significance Thresholds 34
Table 6 SCAQMD Localized Significance Threshold Screening Levels 35
Table 7 Proposed Project Regional Construction Criteria Air Pollutant Emissions 39
Table 8 Proposed Project Regional Construction Criteria Air Pollutant Emissions – Phase 1 with Implementation of Measure AQ-1 40
Table 9 Proposed Project Localized Criteria Air Pollutant Emissions – Construction 42
Table 10 Estimated Cancer and Non-cancer Health Risk at Maximum Exposed Residential Receptor – Project Construction[1] 45
Table 11 Proposed Project Mitigated Localized Criteria Air Pollutant Emissions - Construction 47
Table 12 Estimated Mitigated Cancer and Non-cancer Health Risk at Maximum Exposed Residential Receptor – Project Construction[1] 47
Table 13 Estimated GHG Emissions – Project Construction 49
Table 14 Estimated GHG Emissions – Project Operation with Amortized Construction Emissions 50

Figures

Figure 1 Regional Location 2
Figure 2 Project Location 3
Figure 3 Existing and Proposed Site Facilities 4

Appendices

Appendix A California Emissions Estimator Model Output Files
Appendix B Health Risk Assessment Results
Appendix C AERMOD Output Files

1 Project Description

1.1 Introduction

This report details the analysis of potential air quality and greenhouse gas (GHG) impacts of The Metropolitan Water District of Southern California's (Metropolitan) proposed Garvey Reservoir Rehabilitation Project (herein referred to as "Project" or "proposed Project") in Monterey Park, California. Rincon Consultants, Inc. (Rincon) prepared this study under contract to Metropolitan. The purpose of this study is to analyze the Project's air quality and GHG impacts related to both temporary construction activity and long-term operation of the Project.

1.2 Project Summary

Project Location

The Project site is an approximately 142-acre property located at 1061 South Orange Avenue in Monterey Park, California (Assessor's Parcel Numbers 5260-013-910 and 5260-013-905). The Project site is owned by Metropolitan and is developed with the Garvey Reservoir in the central portion of the site along with appurtenant structures and features, including the Administration Building, Water Quality Laboratory, standby generator, sodium hypochlorite tank farm, and junction structure located in the paved yard on the eastern-central portion of the Project site; a surge tank located immediately south of the reservoir; a construction trailer and paved parking area immediately south of the reservoir; an unpaved construction staging area located immediately northwest of the reservoir; a communications tower and paved parking lot southeast of the reservoir; and paved roadways, power lines, mature trees, and landscaping throughout the Project site. The Project site is secured by chain-link perimeter fencing. The site is regionally accessible from State Route 60, located approximately 0.9 mile south of the Project site and Interstate 10, located approximately 1.4 miles north of the Project site. Local access to the Project site is provided by South Orange Avenue, and the Project site has three driveways at the paved yard along South Orange Avenue immediately north of its intersection with Tegner Drive. The Project site is surrounded by residential neighborhoods to the west, north, south, and east; Hillcrest Elementary School to the east; the Monterey Park City Yard to the north; and Garvey Ranch Park (located on Metropolitan fee property and easement) to the north. Figure 1 shows the Project site in a regional context, and Figure 2 shows the Project site in a local context. Figure 3 shows the location of existing and proposed site facilities.

Project Description

The proposed Project consists of several rehabilitation components and one new component, each of which is described in detail in the following subsections. The location of each Project component is shown in Figure 3.

Reservoir Cover and Liner

The Garvey Reservoir floating cover is a weight-tensioned type cover that is approximately 1,900,000 square feet in size. A series of weights and floats are placed on top of the cover. Sand-

Figure 1 Regional Location

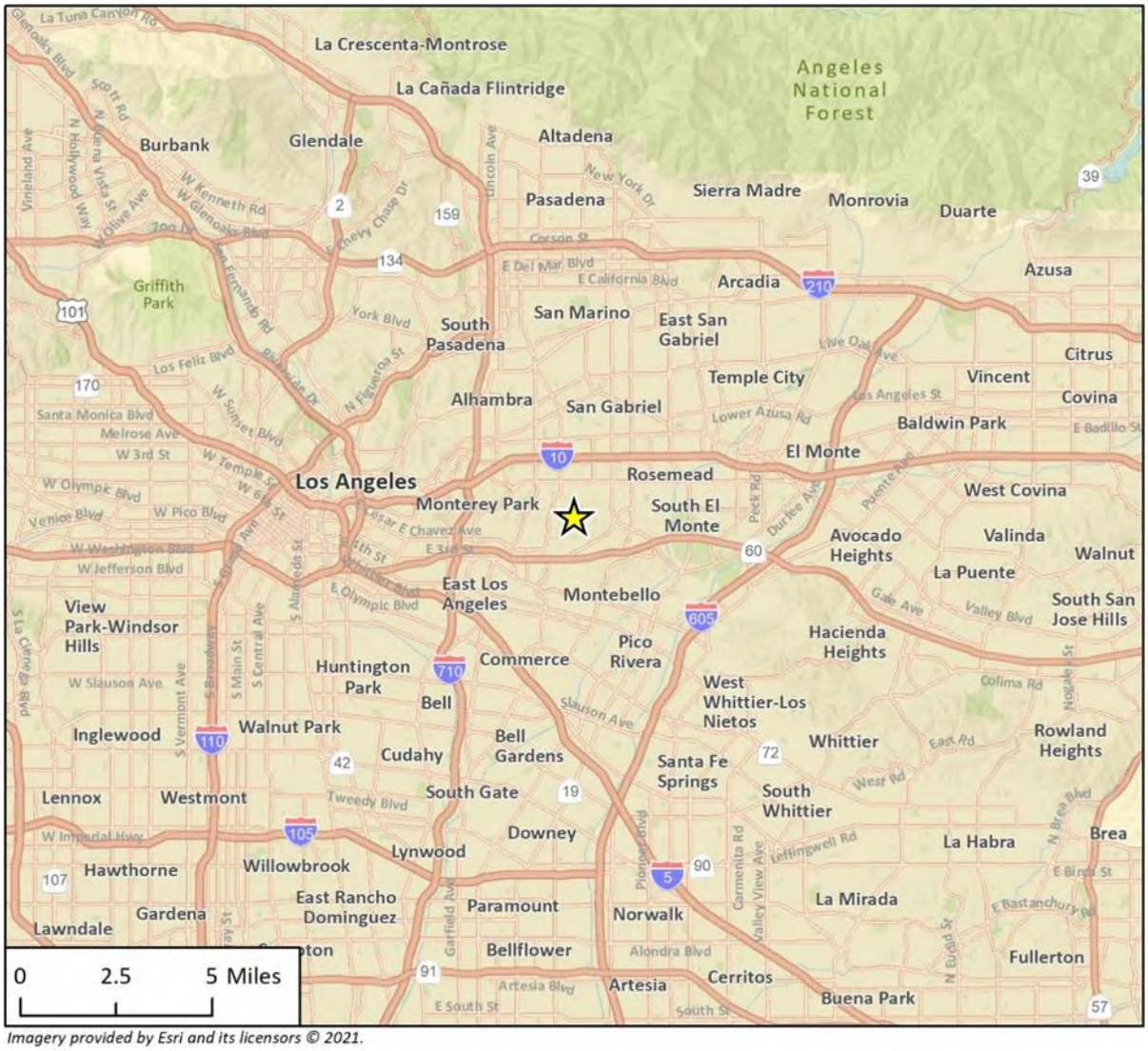

Imagery provided by Esri and its licensors © 2021.

Project Location

N

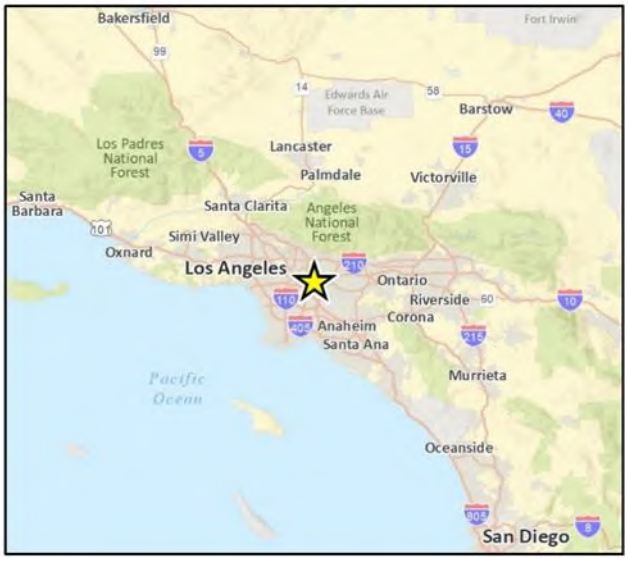

Figure 2 Project Location

Imagery provided by Microsoft Bing and its licensors © 2021.

Figure 3 Existing and Proposed Site Facilities

Imagery provided by Microsoft Bing, ESRI, and their licensors © 2024.

Fig 2-3 Existing Site Facilities

filled weight tubes create troughs that serve as rainwater collection channels. In addition, the floating cover is equipped with 13 rainwater removal pumps. The proposed Project includes the following items related to the reservoir cover and liner:

- Redesign of the inlet/outlet (I/O) tower float assembly;
- Replacement of the polypropylene liner and disposal of the existing liner material;
- Inspection of the reservoir drainage system underneath the liner (including the underlying geo-textile cushion, underdrain, and circulation piping) and peripheral piping and repair or upgrade of the system and piping, if needed;
- Upgrade of the leak detection and monitoring system;
- Installation of a new floating cover;
- Completion of start-up testing procedures including cover inflation, chlorination, emergency dewatering, and instrument testing.

I/O Tower Seismic Upgrades

Garvey Reservoir is equipped with an I/O tower located at the east end of the reservoir. The I/O tower was originally designed for control flexibility, and water flows in or out of the reservoir at various elevations of the I/O tower by the operation of gates located at different elevations. The proposed Project includes seismic rehabilitation of the I/O tower and access bridge. Equipment within the I/O tower and lighting fixtures along the access bridge would also likely be upgraded and replaced. In addition, whether or not the fixtures along the access bridge are replaced, LED lights would be installed in the fixtures.

Junction Structure

The existing junction structure is located to the east of the Administration Building, directly adjacent to South Orange Avenue. The majority of the junction structure is located underground in a subterranean vault with only the roof and access stairway visible at street-level. The functions of the junction structure are essential to water distribution within the Central Pool through the Middle Feeder. The proposed Project includes replacement of five valves in the junction structure to improve reliability.

The timing of implementation of this Project component is contingent on several factors, such as:

1. The reservoir and junction structure cannot be out of service at the same time;
2. The pipelines within the junction structure cannot all be out of service at the same time; and
3. Upstream and downstream pipelines of the junction structure, such as those distributing water from the Robert B. Diemer and/or Joseph Jensen Water Treatment Plants, must be in service to accommodate a partial junction structure shutdown.

Facility Electrical System

The facility electrical system, which includes instrumentation at the Project site, is aged and outdated, which presents maintenance challenges in that some replacement parts are no longer carried by manufacturers. In addition to an aging electrical system, upgrade and/or redesign of the existing electrical system is needed to provide consistent power sources (240-volt to 480-volt) and to replace relays at the switchgear unit, the control panel, and other items. Most of the proposed electrical system work would be located underground between the Administration Building/Water Quality Laboratory and the sodium hypochlorite tank farm.

Standby Generator

The existing standby generator and its appurtenant electrical system, including transfer switches and the switchgear unit, are over 30 years old and have exceeded their useful life. The Project includes replacement of these features along with upgrades to meet current emission and fire codes under the United States Environmental Protection Agency's Emission and Fuel Standards Program. The new generator would likely be larger than the existing generator. The existing concrete block building housing the generator would be demolished. The new generator would either be in the open air under a canopy structure or would be in a new, enclosed building. The standby generator is located at ground level between the Administration Building/Water Quality Laboratory and the sodium hypochlorite tank farm.

Surge Tank Telemetry

An existing 1,000-gallon surge tank is part of the on-site domestic water system located at the top of the reservoir embankment, immediately south of the reservoir. The proposed Project includes improvements to the telemetry equipment connecting the surge tank to the pumps and would install a direct cable from the pumps in the junction structure to the surge tank pressure switch. The Project also includes upgrades to the pressure switches and automated tank controls.

Administration Building and Water Quality Laboratory Rehabilitation

The Administration Building and Water Quality Laboratory is located in the former chlorination building that was part of the original reservoir construction in the 1950s and later converted to its current functions. The proposed Project includes upgrades and rehabilitation of the interior of the water quality laboratory. The proposed laboratory improvements would enhance efficiency, reliability, and safety while providing a workspace that meets current best practice standards for laboratories to ensure compliance with United States Environmental Protection Agency and California Department of Public Health water quality regulations. The proposed Project includes the following:

- Design of a new interior plan layout for the entire building;
- Relocation of the existing Water Quality Laboratory to the Administration Building and vice versa;
- Relocation of the emergency eye wash station from outside the Administration Building to immediately adjacent to the Water Quality Laboratory;
- Provision of a new Americans with Disabilities Act-compliant parking stall with accessible path of travel to the building entrance;
- Modifications to the existing restroom for compliance with the 2010 Americans with Disabilities Act Standard for Accessible Design and 2019 California Building Codes (or most recent iteration in effect at the time);
- Reconstruction of a retaining wall on the south side of the building to prevent ponding and overflow from precipitation;
- Upgrades to the water heater and heating, ventilation, and air conditioning system; and
- Upgrades to enhance safety features.

Proposed Pump Station

The proposed Project includes the construction of a new pump station adjacent to South Orange Avenue to allow for better drought operating conditions, water quality, and flow range. The new pump station would be approximately 150 feet south of the junction structure and would house multiple pumps and valves to provide operational flexibility. The pump station would be built of concrete and masonry, approximately 500 square feet in size, and partially recessed about 10 feet into the hillside adjacent to South Orange Avenue. A subsurface valve tie-in to the Middle Feeder is also proposed and would be actuated when the pump station is utilized.

Miscellaneous Site Upgrades

Numerous, smaller site components may be repaired or rehabilitated as part of the proposed Project. These miscellaneous upgrades may include:

- Upgrades to the ammonia feed system;
- Repaving or repairing existing reservoir roads;
- Replacement of chain link fencing and gates within the property and along the perimeter;
- Improvements to the slopes behind the Administration Building and Water Quality Control Laboratory to reduce stormwater runoff flows;
- Drainage improvements, landscaping, tree trimming, and/or tree and vegetation removal;
- Replacement of security cameras and gate access/intercom; and
- Installation of security motion-activated lighting by the Administration Building and Water Quality Laboratory.

Construction Activities

Project construction activities would occur in three main phases. The first phase would involve work on the reservoir cover and liner and the I/O tower. The second phase would involve work on the junction structure. Other site work related to the facility electrical system, standby generator, surge tank telemetry, Administration Building, Water Quality Laboratory, and miscellaneous site upgrades would occur simultaneously during both Phases 1 and 2. Phase 3 would occur after Phases 1 and 2 are complete and would involve construction of the proposed pump station and ammonia feed system.

Construction of Phases 1 and 2 would occur between September 2025 and December 2027. Construction of Phase 3 would occur between January 2034 and June 2035. Construction activities would typically occur Monday through Friday, although work may be conducted on Saturdays as needed with the approval of Metropolitan staff. While the majority of construction would occur during daytime hours, occasional nighttime activities would be required during the construction period for Metropolitan staff conducting water quality testing and inspections as the reservoir fills up with water. These nighttime activities would not require the use of heavy-duty construction equipment.

Construction staging would occur at an existing, construction staging area located immediately northwest of the reservoir and an existing, partially paved construction trailer area immediately south of the reservoir (see Figure 3). Construction worker parking would primarily occur at the construction trailer area. If there are space limitations, the Project Contractor(s) would carpool workers to and from the Project site.

Prior to the start of work in the reservoir, water would be drained from the reservoir through the junction structure into the Middle Feeder. Any water below the intake at the I/O tower would be pumped out and drained through the existing v-ditches to the stormwater drainage system. All water discharged to the stormwater drainage system would be dechlorinated prior to discharge.

Replacement of the reservoir liner would not require substantial amounts of soil movement. The asphalt and clay layers located below the reservoir liner are expected to be recompacted, but would not be removed. Soil movement for the construction ramp into the reservoir would be needed. Approximately 5,000 cubic yards of total soil movement for the proposed Project is anticipated. Grading would also occur behind the Water Quality Laboratory Building to help control stormwater runoff behind the structure. The maximum depth of excavation would be 15 feet, which would be required for pump station construction.

Replacement of valves in the junction structure would occur after the reservoir has been emptied and re-filled. A crane would be used to replace the valves through the ground-level vault openings immediately east of the junction structure.

Construction of the pump station facility and ammonia feed system would occur after all other Project construction activities at the reservoir are complete.

Lead-based paints and coatings may be present on older mechanical features, such as the valves, epoxy, and I/O tower railings. Asbestos may also be present in some components to be removed or demolished. If lead-based paints and coatings are present, the Project Contractor(s) would comply with California Occupational Safety and Health Administration (CalOSHA) regulations, specifically California Code of Regulations Section 1532.1, which requires testing, monitoring, containment, and disposal of lead-based materials such that exposure levels do not exceed CalOSHA standards. If asbestos is present, the Project Contractor(s) would comply with South Coast Air Quality Management District (SCAQMD) Rule 1403 (Asbestos Emissions from Demolition/Renovation Activities), which requires that the owner or operator of any demolition or renovation activity have an asbestos survey performed prior to demolition.

Demolition would be required for portions of the standby generator structure, diesel fuel tank, emergency diesel generator, reservoir cover and liner, and related appurtenances. Project demolition would include removal of 400 square feet of the existing standby generator structure and fuel tank demolition; 160 square feet of asphalt paving for the new truck pad; 180 cubic feet of existing asphalt paving for the electrical conduit; 1.8 million square feet of the existing reservoir floating cover; 1,300 square feet of the Administration Building and Water Quality Laboratory interior; and 545 cubic feet of the existing hillside southeast of Administration Building and Water Quality Laboratory . For the existing reservoir liner, approximately 1.75 million square feet of the primary geomembrane liner, 1.75 million square feet of the composite drainage course, 1.75 million square feet of the secondary geomembrane liner, 1.1 million square feet of the non-woven geotextile cushion layer, and 1.1 million square feet of the geomembrane chafer would be removed and disposed of. The existing cover and liner materials would not require special disposal requirements and would be hauled to the nearest local landfill, approximately 20 miles from the Project site.

Operations and Maintenance Activities

Operations and maintenance activities at Garvey Reservoir, including the frequency of staff visits, monthly testing of the standby generator, and water usage in the Administration Building and Water Quality Laboratory would remain the same as existing conditions once construction activities

are completed. The proposed pump station would be an unmanned structure, and any operations or maintenance to the facility would be completed using existing Metropolitan staff. However, the proposed pump station would result in a net increase in electricity consumption of approximately 450,000 kilowatt-hours (kWh).

2 Air Quality Background and Regulations

2.1 Air Quality Background

Local Climate and Meteorology

California is divided geographically into 15 air basins for managing the air resources of the state on a regional basis. The Project site is located in Monterey Park, which is within the South Coast Air Basin (SCAB). The SCAB, which is regulated by the South Coast Air Quality Management District (SCAQMD), is bounded by the Pacific Ocean to the west and the San Gabriel, San Bernardino, and San Jacinto Mountains to the north and east. The SCAB includes the non-desert portions of Los Angeles, Riverside, and San Bernardino Counties, in addition to all of Orange County and the San Gorgonio Pass area in Riverside County. The regional climate in the SCAB is semi-arid and is characterized by warm summers, mild winters, infrequent seasonal rainfall, moderate daytime onshore breezes, and moderate humidity. The air quality within the SCAB is primarily influenced by meteorology and a wide range of emission sources, such as dense population centers, substantial vehicular traffic, and industry.

Criteria Air Pollutants

Air pollutants regulated by federal and state law are known as criteria air pollutants and are categorized either as primary pollutants or secondary pollutants. Primary air pollutants are those pollutants emitted directly from the various stationary and mobile sources, including carbon monoxide, volatile organic compounds (VOC), nitrogen oxide (NO_X), sulfur dioxide, respirable and fine particulate matter (particulate matter 10 microns or less in diameter [PM_{10}] and particulate matter 2.5 microns or less in diameter [$PM_{2.5}$], respectively), and lead. Of these, carbon monoxide, sulfur dioxide, PM_{10}, $PM_{2.5}$, and lead are primary criteria pollutants. VOCs and NO_X are precursors that form secondary criteria pollutants, such as ozone and nitrogen dioxide, through chemical and photochemical reactions in the atmosphere. Presented below is a description of each of the primary and secondary criteria air pollutants and their known health effects.

Ozone

Ozone is a highly oxidative unstable gas that is not directly emitted but rather forms in the atmosphere through a photochemical reaction between NO_X and VOC in the presence of sunlight (i.e., smog).[1] VOC is composed of non-methane hydrocarbons (with specific exclusions), and NO_X is composed of different chemical combinations of nitrogen and oxygen, mainly nitric oxide and nitrogen dioxide. NO_X is formed during the combustion of fuels, while VOC is formed during the combustion and evaporation of organic solvents. As a highly reactive molecule, ozone readily combines with many different atmosphere components. Consequently, high ozone levels tend to exist only while high VOC and NO_X levels are present to sustain the ozone formation process. Once the precursors have been depleted, ozone levels rapidly decline. Because these reactions occur on a regional rather than local scale, ozone is considered a regional pollutant. In addition, because

[1] The California Air Resources Board defines VOC and reactive organic gases similarly as, "any compound of carbon excluding carbon monoxide, carbon dioxide, carbonic acid, metallic carbides or carbonates, and ammonium carbonate," (40 Code of Federal Regulations 51.100) with the exception that VOC are compounds that participate in atmospheric photochemical reactions. For the purposes of this analysis, reactive organic gases and VOC are considered comparable in terms of mass emissions, and the term VOC is used in this document to be consistent with SCAQMD's guidance.

ozone requires sunlight to form, it mainly occurs in concentrations considered serious between April and October. Groups most sensitive to ozone include children, the elderly, people with respiratory disorders, and people who exercise strenuously outdoors. Depending on the level of exposure, ozone can cause coughing and a sore or scratchy throat; make it more difficult to breathe deeply and vigorously and cause pain when taking a deep breath; inflame and damage the airways; increase the susceptibility of the lungs to infection; and aggravate lung diseases such as asthma, emphysema, and chronic bronchitis (USEPA 2023a and 2023b).

Carbon Monoxide

Carbon monoxide is a localized pollutant found in high concentrations only near its source. The primary source of carbon monoxide, a colorless, odorless, poisonous gas, is the incomplete combustion of petroleum fuels by automobiles. Therefore, elevated concentrations are usually only found near areas of high traffic volumes. Other sources of carbon monoxide include the incomplete combustion of petroleum fuels at power plants and fuel combustion from wood stoves and fireplaces during the winter. When carbon monoxide levels are elevated outdoors, they can be of particular concern for people with some types of heart disease. These people already have a reduced ability to supply oxygenated blood to their hearts in situations where they need more oxygen than usual. As a result, they are especially vulnerable to the effects of carbon monoxide when exercising or under increased stress. In these situations, short-term exposure to elevated carbon monoxide may result in reduced oxygen to the heart accompanied by chest pain (also known as angina) (USEPA 2023c).

Nitrogen Dioxide

Nitrogen dioxide is a by-product of fuel combustion and is primarily produced by motor vehicles, industrial boilers, and furnaces. Similar to ozone, nitrogen dioxide is not directly emitted but is formed through a reaction between nitric oxide (the principal form of NO_X produced by combustion) and atmospheric oxygen. Nitrogen dioxide is a reactive, oxidizing gas and an acute irritant capable of damaging cell linings in the respiratory tract. Breathing air with a high concentration of nitrogen dioxide can irritate airways in the human respiratory system. Such exposures over short periods can aggravate respiratory diseases leading to respiratory symptoms (such as coughing, wheezing, or difficulty breathing), hospital admissions, and visits to emergency rooms. Longer exposures to elevated concentrations of nitrogen dioxide may contribute to the development of asthma and potentially increase susceptibility to respiratory infections. People with asthma as well as children and the elderly are generally at greater risk for the health effects of nitrogen dioxide (USEPA 2023d). In addition to its health effects, NO_2 absorbs blue light and causes a reddish-brown cast to the atmosphere and reduced visibility. It can also contribute to the formation of ozone/smog and acid rain.

Sulfur Dioxide

Sulfur dioxide is included in a group of highly reactive gases known as “oxides of sulfur.” The largest sources of sulfur dioxide emissions are from fossil fuel combustion at power plants (73 percent) and other industrial facilities (20 percent). Smaller sources of sulfur dioxide emissions include industrial processes such as extracting metal from ore and burning fuels with a high sulfur content by locomotives, large ships, and off-road equipment. Short-term exposures to sulfur dioxide can harm the human respiratory system and make breathing difficult. People with asthma, particularly children, are sensitive to these effects of sulfur dioxide (USEPA 2024).

Particulate Matter

PM_{10} and $PM_{2.5}$ are comprised of finely divided solids and liquids such as dust, soot, aerosols, fumes, and mists. Both PM_{10} and $PM_{2.5}$ are emitted into the atmosphere as by-products of fuel combustion and wind erosion of soil and unpaved roads. The atmosphere, through chemical reactions, can form particulate matter. The characteristics, sources, and potential health effects of PM_{10} and $PM_{2.5}$ can be very different. PM_{10} is generally associated with dust mobilized by wind and vehicles. In contrast, $PM_{2.5}$ is generally associated with combustion processes and formation in the atmosphere as a secondary pollutant through chemical reactions. PM_{10} can cause increased respiratory disease, lung damage, cancer, premature death, reduced visibility, and surface soiling. For $PM_{2.5}$, short-term exposures (up to 24 hours in duration) to elevated concentrations have been associated with premature mortality, increased hospital admissions for heart or lung causes, acute and chronic bronchitis, asthma attacks, emergency room visits, respiratory symptoms, and restricted activity days. These adverse health effects have been reported primarily in infants, children, and older adults with preexisting heart or lung diseases (USEPA 2023e).

Lead

Lead is a metal found naturally in the environment as well as in manufacturing products. The major sources of lead emissions historically have been vehicles and industrial facilities. However, due to the USEPA's regulatory efforts to remove lead from gasoline, atmospheric lead concentrations have declined substantially over the past several decades. The most dramatic reductions in lead emissions occurred before 1990 due to the removal of lead from gasoline sold for most highway vehicles. Lead emissions were further reduced substantially between 1990 and 2008, with reductions occurring in the metals industries, at least partly due to national emissions standards for hazardous air pollutants (USEPA 2013). As a result of phasing out leaded gasoline, metal processing is currently the primary source of lead emissions. The highest lead level in the air is generally found near lead smelters. Other stationary sources include waste incinerators, utilities, and lead-acid battery manufacturers. Lead can adversely affect the nervous system, kidney function, immune system, reproductive and developmental systems, and cardiovascular system depending on exposure. Lead exposure also affects the oxygen-carrying capacity of the blood. The effects of lead most often encountered in current populations are neurological effects in children. Infants and young children are most susceptible to lead exposures, which can contribute to behavioral problems, learning deficits, and lowered intelligence quotient (USEPA 2023f).

Toxic Air Contaminants

In addition to the criteria air pollutants discussed above, toxic air contaminants (TAC) are a diverse group of airborne substances that may cause or contribute to an increase in deaths or serious illness, or that may pose a present or potential hazard to human health. TACs include both organic and inorganic chemical substances that may be emitted from a variety of common sources, including gasoline stations, motor vehicles, dry cleaners, industrial operations, painting operations, and research and teaching facilities. One of the main sources of TACs in California is diesel engine exhaust that contains solid material known as diesel particulate matter (DPM). More than 90 percent of DPM is less than one micron in diameter (about $1/70^{th}$ the diameter of a human hair) and thus is a subset of $PM_{2.5}$. Because of their extremely small size, these particles can be inhaled and eventually become trapped in the bronchial and alveolar regions of the lungs (CARB 2024). TACs may also be emitted from a variety of common sources, including gasoline stations, motor vehicles, dry cleaners, industrial operations, painting operations, and research and teaching facilities.

TACs are different than criteria pollutants because ambient air quality standards have not been established for TACs. TACs occurring at extremely low levels may still cause health effects, and it is typically difficult to identify levels of exposure that do not produce adverse health effects. TAC impacts are described by carcinogenic risk and by chronic (i.e., long duration) and acute (i.e., severe but of short duration) adverse effects on human health. For carcinogenic TACs, potential health impacts are evaluated in terms of overall relative risk expressed as excess cancer cases per one million exposed individuals. Non-carcinogenic TACs differ in that there is generally assumed to be a safe level of exposure below which no negative health impact is believed to occur. These levels are determined on a pollutant-by-pollutant basis. TACs may result in long-term health effects such as cancer, birth defects, neurological damage, asthma, or genetic damage, or short-term acute effects such as eye watering, respiratory irritation, runny nose, throat pain, and headaches (CARB 2024a).

Sensitive Receptors

The term "sensitive receptor" refers to either a person in the population who is more susceptible to health effects resulting from exposure to an air contaminant than the population at large or to a land use that may reasonably be associated with a concentration of such people (SCAQMD 2008a). CARB has identified the following groups most likely to be affected by air pollution: children, pregnant women, the elderly, and those with pre-existing serious health problems affected by air quality (CARB 2005). Examples of sensitive receptors identified in SCAQMD and CARB guidance documents include residences, schools, playgrounds, childcare centers, athletic facilities, long-term health care facilities (e.g., hospitals), rehabilitation centers, convalescent centers, and retirement homes. Sensitive receptors in the vicinity of the Project site include residential neighborhoods to the west, north, south, and east; Hillcrest Elementary School to the east across South Orange Avenue; and Garvey Ranch Park to the north.

2.2 Air Quality Regulations

Federal Air Quality Regulations

Federal Clean Air Act

The federal Clean Air Act (CAA) was enacted in 1970 and amended in 1977 and 1990 [42 United States Code 7401] for the purposes of protecting and enhancing the quality of the nation's air resources to benefit public health, welfare, and productivity.

The USEPA has set primary and secondary National Ambient Air Quality Standards (NAAQS) for ozone, carbon monoxide, nitrogen dioxide, sulfur dioxide, PM_{10}, $PM_{2.5}$, and lead. Ambient air quality standards represent the maximum levels of background pollution considered safe, with an adequate margin of safety, to protect the public health and welfare.[2] Table 1 lists the current NAAQS for criteria air pollutants.

[2] Primary standards are intended to protect public health, and secondary standards are intended to protect public welfare (e.g., visibility, animals, crops, vegetation, buildings.)

Table 1 Federal and State Ambient Air Quality Standards for Criteria Pollutants

Pollutant	Federal Standard (NAAQS)	California Standard (CAAQS)
Carbon Monoxide	35.0 ppm (1-hr avg) 9.0 ppm (8-hr avg)	20.0 ppm (1-hr avg) 9.0 ppm (8-hr avg)
Hydrogen Sulfide	No Federal Standards	0.03 ppm (1-hr avg)
Lead	0.15 $\mu g/m^3$ (rolling 3-month avg) 1.5 $\mu g/m^3$ (calendar quarter)	1.5 $\mu g/m^3$ (30-day avg)
Nitrogen Dioxide	0.100 ppm (1-hr avg) 0.053 ppm (annual avg)	0.18 ppm (1-hr avg) 0.030 ppm (annual avg)
Ozone	0.070 ppm (8-hr avg)	0.09 ppm (1-hr avg) 0.070 ppm (8-hr avg)
Particulate Matter (PM_{10})	150 $\mu g/m^3$ (24-hr avg)	50 $\mu g/m^3$ (24-hr avg) 20 $\mu g/m^3$ (annual arithmetic mean)
Particulate Matter ($PM_{2.5}$)	35 $\mu g/m^3$ (24-hr avg) 9 $\mu g/m^3$ (annual avg)	12 $\mu g/m^3$ (annual arithmetic mean)
Sulfates	No Federal Standards	25 $\mu g/m^3$ (24-hr avg)
Sulfur Dioxide	0.075 ppm (1-hr avg) 0.5 ppm (3-hr avg) 0.14 ppm (24-hr avg) 0.030 ppm (annual arithmetic mean)	0.25 ppm (1-hr avg) 0.04 ppm (24-hr avg)
Vinyl Chloride	No Federal Standards	0.01 ppm (24-hr avg)
Visibility-Reducing Particles	No Federal Standards	Visibility of ten miles or more (30 miles or more for Lake Tahoe) due to particles when relative humidity is less than 70 percent (8-hr avg)

NAAQS = National Ambient Air Quality Standards; CAAQS = California Ambient Air Quality Standards; ppm = parts per million; avg = average; $\mu g/m^3$ = micrograms per cubic meter

Source: CARB 2020

State Air Quality Regulations

California Clean Air Act

The California Clean Air Act was enacted in 1988 (California Health & Safety Code Section 39000 et seq.). Under the California Clean Air Act, the State has adopted the California Ambient Air Quality Standards (CAAQS), which are generally more stringent than the NAAQS. In addition to the federal criteria pollutants, the CAAQS also specify standards for visibility-reducing particles, sulfates, hydrogen sulfide, and vinyl chloride. While USEPA is the federal agency designated to administer air quality regulation, CARB, which became part of the California Environmental Protection Agency in 1991, is responsible for ensuring implementation of the California Clean Air Act. Table 1 above lists the current State standards for regulated pollutants.

Toxic Air Contaminants

In 1983, the California Legislature enacted a program to identify the health effects of TACs and to reduce exposure to these contaminants to protect the public health (Assembly Bill [AB] 1807: California Health and Safety Code Sections 39650–39674). The California Air Toxics Program

establishes the process for the identification and control of TACs and includes provisions to make the public aware of significant toxic exposures and for reducing risk.

Additionally, the Air Toxics "Hot Spots" Information and Assessment Act (AB 2588) was enacted in 1987 and requires stationary sources to report the types and quantities of certain substances routinely released into the air. The goals of the Air Toxics "Hot Spots" Act are to collect emissions data, identify facilities having localized impacts, ascertain health risks, notify nearby residents of significant risks, and reduce those significant risks to acceptable levels.

The Children's Environmental Health Protection Act (Senate Bill 25 of 1999) focuses on children's exposure to air pollutants. The act requires CARB to review its air quality standards from a children's health perspective, evaluate the statewide air quality monitoring network, and develop any additional air toxic control measures needed to protect children's health.

State Implementation Plan

The federal CAA Amendments of 1990 mandate that states submit and implement a State Implementation Plan (SIP) for areas not meeting air quality standards. The SIP is a collection of documents that set forth the state's strategies for achieving the NAAQS. In California, the SIP is a compilation of new and previously submitted plans, programs (such as monitoring, modeling, and permitting), district rules, state regulations, and federal controls. CARB is the lead agency for the SIP, and local air districts are responsible for preparing and implementing air quality attainment plans for pollutants for which each district is in non-attainment. These local air quality plans are then incorporated into the SIP. All of the items included in the California SIP are listed in 40 Code of Federal Regulations 52.220.

Local Air Quality Regulations

South Coast Air Quality Management District

SCAQMD attains and maintains air quality conditions in the SCAB through a comprehensive program of planning, regulation, enforcement, technical innovation, and promotion of the understanding of air quality issues. The clean air strategy of SCAQMD includes preparation of plans for attainment of ambient air quality standards, adoption and enforcement of rules and regulations concerning sources of air pollution, and issuance of permits for stationary sources of air pollution.

AIR QUALITY MANAGEMENT PLAN

To meet the NAAQS and CAAQS, SCAQMD has adopted a series of air quality management plans (AQMP) that serve as a regional blueprint to develop and implement an emission reduction strategy that will bring the area into attainment with the standards in a timely manner. The most significant air quality challenge in the SCAB is to reduce NO_X emissions to meet the 2037 ozone standard deadline for the non-Coachella Valley portion of the SCAB because NO_X plays a critical role in the creation of ozone. The 2022 AQMP includes strategies to ensure SCAQMD does its part to further the district's ability to meet the 2015 federal ozone standards. SCAQMD will need to reduce emissions of NO_X by 67 percent beyond what is required by adopted rules and regulations to meet the 2015 federal ozone standard. The 2022 AQMP builds on the measures already in place from the previous AQMPs and includes a variety of additional strategies such as regulation, accelerated deployment of available cleaner technology, best management practices, co-benefits from existing programs, incentives, and other Clean Air Act measures to meet the 8-hour ozone standard. Because NO_X emissions also lead to the formation of $PM_{2.5}$, the NO_X reductions needed to

meet the ozone standards will likewise lead to reduction of $PM_{2.5}$ levels and attainment of the annual $PM_{2.5}$ standards (SCAQMD 2022).

RULES AND REGULATIONS

SCAQMD has also adopted a set of rules and regulations pertaining to various emissions sources. All projects are subject to SCAQMD rules and regulations in effect at the time of construction. Rules applicable to the proposed Project include, but are not limited to, the following:

- **Rule 401: Visible Emissions.** This rule is intended to prevent the discharge of pollutant emissions from an emissions source that results in visible emissions.
- **Rule 402: Nuisance.** This rule is intended to prevent the discharge of pollutant emissions from an emissions source that results in a public nuisance.
- **Rule 403: Fugitive Dust.** This rule is intended to reduce the amount of particulate matter entrained in the ambient air as a result of anthropogenic (human-made) fugitive dust sources by requiring actions to prevent, reduce, or mitigate fugitive dust emissions.
- **Rule 1108 - Volatile Organic Compounds.** This rule governs the sale, use, and manufacturing of asphalt and limits the VOC content in asphalt used in the SCAB. This rule also regulates the VOC content of asphalt used during construction.
- **Rule 1113: Architectural Coatings.** The rule prohibits any person to apply or solicit the application of any architectural coating within the SCAQMD with VOC content in excess of the values specified in Rule 1113.
- **Rule 1143 – Paint Thinners and Solvents.** This rule governs the manufacture, sale, and use of paint thinners and solvents used in thinning coating materials, cleaning of coating application equipment, and other solvent cleaning operations by limiting their VOC content.
- **Rule 1186 – Fugitive Dust.** This rule limits the generation of fugitive dust on paved and unpaved roads. It sets certification protocols and requirements for street sweepers that are under contract to provide sweeping services to any federal, state, county, agency, or special districts such as water, air, sanitation, transit, or school district.
- **Rule 1110.2 – Emissions from Gaseous- and Liquid-Fueled Engines.** This rule limits the emissions of NO_X, VOC, and carbon monoxide from stationary and portable engines over 50 brake horsepower, including standby generators.
- **Rule 1401 – New Source Review of Toxic Air Contaminants.** This rule specifies limits for maximum individual cancer risk, cancer burden, and noncancer acute and chronic hazard index from new stationary sources that generate TAC emissions.
- **Rule 1470 – Requirements for Stationary Diesel-Fueled Internal Combustion and Other Compression Ignition Engines**. This rule establishes operating standards for stationary diesel-fueled engines, including specific requirements for standby generators such as limits on non-emergency operation and particulate matter emission rates.

TOXIC AIR CONTAMINANTS

SCAQMD limits emissions and public exposure to TACs through a number of programs. Under SCAQMD Regulation XIV (Toxics and Other Non-Criteria Pollutants), and in particular Rule 1401 (New Source Review), all sources with the potential to emit TACs are required to obtain permits from SCAQMD. Permits may be granted to these operations if they are constructed and operated in accordance with applicable regulations, including new source review standards and air toxics

control measures. SCAQMD prioritizes TAC-emitting stationary sources based on the quantity and toxicity of the TAC emissions and the proximity of the facilities to sensitive receptors.

2.3 Existing Regional and Local Air Quality

SCAQMD operates a network of air quality monitoring stations throughout the SCAB. The purpose of the monitoring stations is to measure ambient concentrations of pollutants and determine whether ambient air quality meets the NAAQS and CAAQS. The monitoring station located closest to the Project site is the Pico Rivera-4144 San Gabriel station located at 4144 San Gabriel River Parkway in Pico Rivera in Source Receptor Area (SRA) 11. This monitoring station measures ozone, carbon monoxide, nitrogen dioxide, and $PM_{2.5}$. The closest monitoring station to the Project site that monitors for PM_{10} and sulfur dioxide is the Los Angeles-North Main Street station at 1630 North Main Street in Los Angeles in SRA 2 (Northwest Coastal LA County). Table 2 reports ambient air quality measurements and indicates the number of days that each standard has been exceeded between 2020 and 2022.[3]

Table 2 Ambient Air Quality at Nearest Monitoring Stations (2020 – 2022)

Pollutant	2020	2021	2022
Carbon Monoxide (ppm), Highest 8-Hour Average[1]	1.7	1.5	1.5
Number of days above State or Federal standard (>9.0 ppm)	0	0	0
Nitrogen Dioxide (ppm) - Worst Hour (Federal Measurements)[1]	0.069	0.072	0.065
Number of days above State standard (>0.18 ppm)	0	0	0
Number of days above Federal standard (0.10 ppm)	0	0	0
8 Hour Ozone (ppm), 8-Hour Average[1]	0.114	0.074	0.091
Number of days above Federal standards (>0.070 ppm)	23	3	2
Number of days above State (>0.070 ppm)	23	3	2
Ozone (ppm), Worst Hour[1]	0.169	0.104	0.123
Number of days above State standard (>0.09 ppm)	20	2	3
Particulate Matter <10 microns, $\mu g/m^3$, Worst 24 Hours[2]	83.7	34.0	61.0
Number of days above Federal standard (>150 $\mu g/m^3$)	0	0	0
Particulate Matter <2.5 microns, $\mu g/m^3$, Worst 24 Hours[1]	82.9	66.0	53.8
Number of days above Federal standard (>35 $\mu g/m^3$)	5	3	1
Sulfur Dioxide (ppm), Highest 1-Hour Average[2]	0.004	0.002	0.007
Number of days above State standard (>0.25 ppm)	0	0	0
Number of days above Federal standard (>0.075 ppm)	0	0	0

ppm = parts per million; $\mu g/m^3$ = micrograms per cubic meter
[1] Monitored at Pico Rivera-4144 San Gabriel station.
[2] Monitoring at Los Angeles-North Main Street station.
Notes: Monitoring data for federal and state standards may differ due to how standards are calculated. Ambient air quality monitoring data for hydrogen sulfide, sulfates, and vinyl chloride are not readily available in the South Coast Air Basin and are therefore not reported in this table.
Source: CARB 2024b and USEPA 2024

[3] Draft ambient air quality monitoring data is available for year 2023; however, this data had not been finalized by CARB as of the date of this report.

The federal and California Clean Air Acts use measured ambient air quality monitoring data to classify specific geographic areas (typically air basins) as either “attainment” or “nonattainment” for each pollutant. If an air basin is not in attainment for a criteria pollutant under the NAAQS or CAAQS, the air basin is classified as a nonattainment area for that pollutant. Under the federal CAA, once a nonattainment area has achieved the air quality standards for a criteria pollutant, it may be re-designated to an attainment area for that pollutant. To be re-designated, the area must meet air quality standards and have a 10-year plan for continuing to meet and maintain air quality standards, as well as satisfy other requirements of the federal CAA. Areas that have been re-designated to attainment are called maintenance areas. The SCAB is designated non-attainment (extreme) for 8-hour ozone NAAQS and non-attainment (serious) for the $PM_{2.5}$ NAAQS as well as partial non-attainment for lead for near-source monitors in Los Angeles County. The SCAB is also designated non-attainment for the ozone, PM_{10}, and $PM_{2.5}$ CAAQS (SCAQMD 2018a). The SCAB is designated unclassifiable or in maintenance/attainment for all other federal and State standards.

With regard to TACs, the Multiple Air Toxics Exposure Study (MATES) V completed by SCAQMD indicates 67 percent of overall cancer risk from TACs is attributed to DPM in the SCAB, and the immediate region around the Project site has an estimated carcinogenic risk of 549 in a million (SCAQMD 2018b).

3 Greenhouse Gas Emissions Background and Regulations

3.1 Greenhouse Gas Emissions Background

Overview of Greenhouse Gas Emissions

Gases that trap heat in the atmosphere are known as greenhouse gases (GHGs). GHGs allow sunlight to enter the atmosphere but trap a portion of the outward-bound infrared radiation that warms the air. The process is similar to the effect greenhouses have in raising the internal temperature of the structure. Both natural processes and human activities emit GHGs. The accumulation of GHGs in the atmosphere regulates the Earth's temperature, but emissions from human activities (such as fossil fuel-based electricity production and the use of motor vehicles) have elevated the concentration of GHGs in the atmosphere. Scientists agree this accumulation of GHGs has contributed to an increase in the temperature of the Earth's atmosphere and to global climate change. Global climate change is a change in the average weather on Earth that can be measured by wind patterns, storms, precipitation, and temperature. Although there is disagreement as to the rate of global climate change and the extent of the impacts attributable to human activities, most scientists agree there is a direct link between increased GHG emissions and long-term global temperature increases.

The gases widely seen as the principal contributors to human-induced climate change include carbon dioxide (CO_2), methane, nitrous oxides, fluorinated gases such as hydrofluorocarbons and perfluorocarbons, and sulfur hexafluoride. Water vapor is excluded from the list of GHGs because it is short-lived in the atmosphere, and natural processes, such as oceanic evaporation, largely determine its atmospheric concentrations.

GHGs are emitted by natural processes and human activities. Of these gases, CO_2 and methane are emitted in the greatest quantities from human activities. Emissions of CO_2 are usually by-products of fossil fuel combustion, and methane results from off-gassing associated with agricultural practices and landfills. Human-made GHGs, many of which have greater heat-absorption potential than CO_2, include fluorinated gases and sulfur hexafluoride.

Different types of GHGs have varying global warming potentials (GWP). The GWP of a GHG is the potential of a gas or aerosol to trap heat in the atmosphere over a specified timescale (generally 100 years) (USEPA 2023g). Because GHGs absorb different amounts of heat, a common reference gas (CO_2) is used to relate the amount of heat absorbed to the amount of the gas emitted, referred to as "carbon dioxide equivalent" (CO_2e), which is the amount of GHG emitted multiplied by its GWP. Carbon dioxide has a 100-year GWP of one. By contrast, methane has a GWP of 30, meaning its global warming effect is 30 times greater than CO_2 on a molecule per molecule basis (Intergovernmental Panel on Climate Change [IPCC] 2021).[4]

[4] The IPCC's (2021) *Sixth Assessment Report* determined that methane has a GWP of 30. However, the 2022 Climate Change Scoping Plan published by the CARB uses a GWP of 25 for methane, consistent with the Intergovernmental Panel on Climate Change's (2007) *Fourth Assessment Report*. Therefore, this analysis utilizes the GWPs from the Fourth Assessment Report.

Potential Effects of Climate Change

Globally, climate change has the potential to affect numerous environmental resources through impacts to future air temperatures and precipitation patterns. Scientific modeling predicts continued GHG emissions at or above current rates would induce more extreme climate changes during the 21st century than were observed during the 20th century. Each of the past three decades has been warmer than all the previous decades in the instrumental record, and the decade from 2000 through 2010 has been the warmest. The year 2023 was the warmest year since global records began in 1850 with observed global mean surface temperature (GMST) at approximately 1.2° Celsius (C) higher than the average GMST over the 20th century average (National Oceanic and Atmospheric Administration 2024). Furthermore, several independently-analyzed data records of global and regional Land-Surface Air Temperature (LSAT) obtained from station observations jointly indicate LSAT and sea surface temperatures have increased. Due to past and current activities, anthropogenic GHG emissions have increased global mean surface temperature at a rate of approximately 0.1°C per decade since 1900. In addition to these findings, there are identifiable signs that global warming is currently taking place, including substantial ice loss in the Arctic over the past two decades (IPCC 2023).

According to *California's Fourth Climate Change Assessment*, statewide temperatures from 1986 to 2016 were approximately 0.6 to 1.1°C higher than those recorded from 1901 to 1960. Potential impacts of climate change in California may include reduced water supply from snowpack, sea level rise, more extreme heat days per year, more large forest fires, and more drought years (State of California 2018). In addition to statewide projections, *California's Fourth Climate Change Assessment* includes regional reports that summarize climate impacts and adaptation solutions for nine regions of the state with regionally-specific climate change case studies (State of California 2018). However, while there is growing scientific consensus about the possible effects of climate change at a global and statewide level, current scientific modeling tools are unable to predict what local impacts may occur with a similar degree of accuracy.

3.2 Greenhouse Gas Regulations

Federal Greenhouse Gas Regulations

Federal Clean Air Act

The federal Clean Air Act (CAA) does not specifically regulate GHG emissions. However, the U.S. Supreme Court determined in *Massachusetts et al. v. Environmental Protection Agency et al.* ([2007] 549 U.S. 05-1120) that the USEPA has the authority to regulate motor-vehicle GHG emissions under the federal CAA. Currently, there are no federal regulations that set ambient standards for GHGs.

Final Rule to Revise Existing National GHG Emissions Standards for Passenger Cars and Light Trucks Through Model Year 2026

The USEPA finalized federal GHG emissions standards for passenger cars and light trucks for model years 2023 through 2026 in February 2022. These standards will leverage current and future technologies to result in the avoidance of more than three billion tons of GHGs through 2050.

State Greenhouse Gas Regulations

Statewide Greenhouse Gas Emission Reduction Targets

ASSEMBLY BILL 32 - CALIFORNIA GLOBAL WARMING SOLUTIONS ACT OF 2006

The "California Global Warming Solutions Act of 2006," (AB 32), outlines California's major legislative initiative for reducing GHG emissions. AB 32 codifies the statewide goal of reducing GHG emissions to 1990 levels by 2020 and requires CARB to prepare a Scoping Plan that outlines the main state strategies for reducing GHG emissions to meet the 2020 deadline. In addition, AB 32 requires CARB to adopt regulations to require reporting and verification of statewide GHG emissions. Based on this guidance, CARB approved a 1990 statewide GHG level and 2020 target of 431 MMT of CO_2e, which was achieved in 2016.

SENATE BILL 32

On September 8, 2016, the governor signed Senate Bill (SB) 32 into law, extending the California Global Warming Solutions Act of 2006 by requiring the state to further reduce GHG emissions to 40 percent below 1990 levels by 2030 (the other provisions of AB 32 remain unchanged). On December 14, 2017, the CARB adopted the 2017 Scoping Plan, which provides a framework for achieving the 2030 target. The 2017 Scoping Plan relies on the continuation and expansion of existing policies and regulations, such as the Cap-and-Trade Program, and implementation of adopted policies and legislation, such as SB 1383 and SB 100.

SENATE BILL 1383

Adopted in September 2016, SB 1383 requires CARB to approve and begin implementing a comprehensive strategy to reduce emissions of short-lived climate pollutants. SB 1383 requires the strategy to achieve the following reduction targets by 2030:

- Methane – 40 percent below 2013 levels
- Hydrofluorocarbons – 40 percent below 2013 levels
- Anthropogenic black carbon – 50 percent below 2013 levels

SB 1383 also requires the California Department of Resources Recycling and Recovery, in consultation with CARB, to adopt regulations that achieve specified targets for reducing organic waste in landfills.

ASSEMBLY BILL 1279

Signed into law in 2022, AB 1279 declares the policy of the State is both to achieve net zero GHG emissions as soon as possible, but no later than 2045, and maintain net negative GHG emissions thereafter and to ensure that by 2045, statewide anthropogenic GHG emissions are reduced to at least 85 percent below the 1990 levels.

2022 SCOPING PLAN

On December 15, 2022, CARB adopted the 2022 Scoping Plan, which sets a target of reducing emissions to 85 percent below 1990 levels by 2045 and outlines a technologically feasible, cost-effective, and equity-focused path to achieve carbon neutrality by 2045. As with previous scoping plans, the 2022 Scoping Plan does not provide project-level thresholds for land use development.

Instead, it recommends local governments implement climate strategies consistent with the 2022 Scoping Plan Appendix D: Local Actions (CARB 2022). The 2022 Scoping Plan also assesses the progress California is making toward reducing its GHG emissions by at least 40 percent below 1990 levels by 2030, as called for in SB 32 and laid out in the 2017 Scoping Plan.

Renewable Electricity

SENATE BILL 100 - CALIFORNIA RENEWABLES PORTFOLIO STANDARD PROGRAM

Adopted in September 2018, SB 100 supports the reduction of GHG emissions from the electricity sector by accelerating the state's Renewables Portfolio Standard (RPS) Program. SB 100 requires electricity providers to increase procurement from eligible renewable energy resources to 33 percent of total retail sales by 2020, 60 percent by 2030, and 100 percent by 2045.

SENATE BILL 1020

SB 1020, signed into law in September 2022, requires renewable energy and zero-carbon resources to supply 90 percent of all retail electricity sales by 2035, 95 percent by 2040, and 100 percent by 2045.

Vehicle Emissions Standards and Clean Vehicles

EXECUTIVE ORDER B-48-18 (ZERO-EMISSION VEHICLES)

In January 2018, Governor Brown signed Executive Order B-48-18 requiring all State entities to work with the private sector to have at least 5 million ZEVs on the road by 2030 as well as to install 200 hydrogen fueling stations and 250,000 electric vehicle (EV) charging stations by 2025.

EXECUTIVE ORDER N-79-20 (ZERO EMISSIONS VEHICLES SALES)

Governor Gavin Newsom signed Executive Order N-79-20 in September 2020, which sets a statewide goal that 100 percent of all new passenger car and truck sales in the state will be zero-emissions by 2035. It also sets a goal that 100 percent of statewide new sales of medium- and heavy-duty vehicles will be zero emissions by 2045, where feasible, and for all new sales of drayage trucks to be zero emissions by 2035. Additionally, the Executive Order targets 100 percent of new off-road vehicle sales in the state to be zero emission by 2035.

CALIFORNIA ADVANCED CLEAN TRUCKS REGULATION

In March 2021, CARB approved the Advanced Clean Trucks regulation, which requires manufacturers who certify Class 2b-8 chassis or complete vehicles with combustion engines to sell zero-emission trucks as an increasing percentage of their annual California sales from 2024 to 2035. In addition, the regulation requires company and fleet reporting for large employers and fleet owners with 50 or more trucks. By 2045, all new trucks sold in California must be zero-emission.

CALIFORNIA ADVANCED CLEAN FLEETS REGULATION

In April 2023, CARB approved the Advanced Clean Fleets regulation, which is part of California's strategy to accelerate the adoption of medium- and heavy-duty zero-emission vehicles (ZEV). It complements the Advanced Clean Trucks regulation and aims to achieve public health, air quality, and climate goals. The Advanced Clean Fleets regulation applies to fleets performing drayage operations; fleets owned by state, local, and federal government agencies; and high-priority fleets.

The Advanced Clean Fleets regulation includes several components, such as mandates for high-priority and government fleets to purchase increasing percentages of ZEVs over time.

CEQA Guidelines Requirements for Analysis and Reduction of GHG Emissions

CEQA Guidelines Section 15064.4(a) indicates public agencies should make a careful judgement in determining the significance of GHG emissions under CEQA. Public agencies shall make a good-faith effort, based to the extent possible on scientific and factual data, to describe, calculate, or estimate the amount of GHG emissions resulting from a project. A public agency shall have discretion to determine, in the context of a particular project, whether to quantify GHG emissions resulting from the project and/or rely on a qualitative analysis or performance-based standards.

Additionally, CEQA Guidelines Section 15064.4(b) states public agencies should focus GHG analysis on the reasonably foreseeable incremental contribution of the project's emissions to the effects of climate change when determining the significance of a project's GHG emissions. A project's incremental contribution may be cumulatively considerable even if it appears relatively small compared to statewide, national, or global emissions. A public agency's analysis should consider a timeframe that is appropriate for the project and also must reasonably reflect evolving scientific knowledge and state regulatory schemes.

CEQA Guidelines Section 15183.5(b) states public agencies may choose to analyze and mitigate significant GHG emissions in a plan for the reduction of GHG emissions or similar document, and such a plan may be used in a cumulative impacts analysis of GHG emissions. Pursuant to CEQA Guidelines 15183.5(b)(1), the plan for the reduction of GHG emissions should:

- Quantify GHG emissions, both existing and projected over a specified time period, resulting from activities within a defined geographic area;
- Establish a level, based on substantial evidence, below which the contribution to GHG emissions from activities covered by the plan would not be cumulatively considerable;
- Identify and analyze the GHG emissions resulting from specific actions or categories of actions anticipated within the geographic area;
- Specify measures or a group of measures, including performance standards, that substantial evidence demonstrates, if implemented on a project-by-project basis, would collectively achieve the specified emissions level;
- Establish a mechanism to monitor the plan's progress toward achieving the level and to require amendment if the plan is not achieving specified levels; and
- Be adopted in a public process following environmental review.

Consistent with CEQA Guidelines Sections 15064(h)(3) and 15130(d), CEQA Guidelines Section 15183.5(b)(2) states a plan for the reduction of GHG emissions, once adopted following certification of an EIR or adoption of an environmental document, may be used for later projects in the cumulative impacts analysis for GHG emissions. An environmental document that relies on a GHG reduction plan for a cumulative impacts analysis must identify those requirements specified in the plan that apply to the project, and, if those requirements are not otherwise binding and enforceable, incorporate those requirements as mitigation measures applicable to the project. If there is substantial evidence that the effects of a particular project may be cumulatively considerable, notwithstanding the project's compliance with the specified requirements in the plan for the reduction of GHG emissions, an EIR must be prepared for the project.

Regional and Local Regulations

South Coast Air Quality Management District

As a method for determining significance under CEQA, SCAQMD developed a draft tiered flowchart in 2008 for determining significance thresholds for GHGs for industrial projects where SCAQMD is acting as the lead agency. In December 2008, SCAQMD adopted a threshold of 10,000 MT of CO_2 per year for industrial facilities, but only with respect to projects where SCAQMD is the lead agency (SCAQMD 2008b). SCAQMD has not adopted a threshold for non-industrial projects at the time of this report. Although the SCAQMD has adopted a threshold for industrial facilities, this threshold is not used because SCAQMD is not the lead agency for the proposed Project under CEQA.

City of Monterey Park Climate Action Plan

The City of Monterey Park Climate Action Plan (CAP) includes a baseline (2009) GHG inventory for the city and sets forth a comprehensive strategy to address GHG emissions related to land use, transportation, building design, energy use, water demand, and waste generation with a 2020 reduction target (City of Monterey Park 2012). Because Metropolitan is an independent special district, its GHG emissions are not within the purview of the City of Monterey Park CAP; therefore, this plan is not applicable to the proposed Project and is not discussed further.

The Metropolitan Water District of Southern California Climate Action Plan

In May 2022, Metropolitan adopted a CAP and certified the associated Program EIR. The CAP sets targets for reducing GHG emissions from Metropolitan's operations, including the conveyance, storage, treatment, and delivery of water to its 26 member water agencies. The CAP informs policy and planning decisions and establishes a feasible and implementable way to reach its emissions reduction target. As outlined in Section 1.1 of Metropolitan's CAP, the CAP meets all the required elements of a qualified GHG emissions reduction plan and is in compliance with CEQA Guidelines Section 15183.5(b)(1) (described previously under *State Greenhouse Gas Regulations*).

Metropolitan used an emissions inventory and forecast to provide a basis for establishing targets for future GHG reductions. Metropolitan established a 2030 target of 40 percent below 1990 levels by 2030 for GHG emissions reduction to achieve consistency with SB 32 and a 2045 target of carbon neutrality consistent the recently signed AB 1279, which codifies the State's goal of achieving carbon neutrality by 2045 that was initially set forth in EO B-55-18. Metropolitan is tracking its GHG emissions annually using a carbon budget approach. The carbon budget is analogous to a tank with a set capacity, or a total mass emission cap, between emissions level in 2005 and carbon neutrality in 2045. All the emissions from Metropolitan's operations go into this tank each year. The total capacity of the tank is Metropolitan's total emissions budget, and over time that tank fills up. As long as Metropolitan produces fewer GHG emissions than can fit in the tank, the identified targets will be achieved regardless of emissions produced during any particular year. Metropolitan's total carbon budget was calculated in Section 4.3 of the CAP and is based on the total emissions that can be generated between 2005 and 2045 while still achieving Metropolitan's 2030 and 2045 GHG emissions reduction targets (Metropolitan 2022). Additionally, Metropolitan is committed to preparing annual CAP progress reports to track GHG emissions against the carbon budget as well as a CAP update every five years to achieve carbon neutrality by 2045.

The CAP includes a suite of 42 GHG emissions reduction measures that would reduce Metropolitan's GHG emissions and achieve carbon neutrality while also providing improved

infrastructure reliability, increased energy resiliency, and decreased costs associated with energy procurement and maintenance. GHG reduction measures included in the CAP include phasing out natural combustion, converting to a zero-emissions vehicle fleet, using alternative low-carbon intensity fuels, utilizing low-carbon and carbon-free electricity, improving energy efficiency, increasing waste diversion, and increasing water conservation and local water supplies (Metropolitan 2022).

4 Methodology and Significance Thresholds

4.1 Methodology

Criteria air pollutant and GHG emissions that would be generated by Project construction and operation were calculated using the California Emissions Estimator Model (CalEEMod), Version 2022.1.1.21. The methodology utilized to estimate emissions for the proposed Project is discussed below. Assumptions, calculations and CalEEMod output files for the Project are included in Appendix A of this report.

Construction Emissions

Project construction would primarily generate temporary criteria air pollutant and GHG emissions from construction equipment operation on site, construction worker vehicle trips to and from the site, and haul trips to transport materials, demolition debris, and soil export to and from the Project site. Construction input data for CalEEMod include but are not limited to: (1) the anticipated start and finish dates of construction activity; (2) inventories of construction equipment to be used; (3) areas to be excavated and graded; and (4) volumes of materials to be exported from and imported to the Project site.

The analysis assessed maximum daily emissions from individual construction activities, including demolition, site preparation, grading, infrastructure installation, building construction, paving, and coating applications. Based on information provided by Metropolitan, construction was modeled to start September 30, 2025 for Phases 1 and 2 and January 2034 for Phase 3 with completion anticipated in December 2027 for Phases 1 and 2 and June 2035 for Phase 3. Additional details on the anticipated construction schedule are outlined in Table 3.

Table 3 Construction Schedule

Project Component	Phase	Estimated Construction Schedule
Reservoir Cover/Liner	Phase 1	Demolition: 100 days Infrastructure Installation: 18 months Paving/Site Restoration: 3 months
I/O Tower	Phase 1	Infrastructure Installation: 9 months Paving/Site Restoration: 2 months
Junction Structure	Phase 2	Infrastructure Installation: 6 months
Facility Electrical System	Phases 1 and 2	Site Preparation: 3 months Grading: 1 month Infrastructure Installation: 6 months Paving/Site Restoration: 2 months
Standby Generator	Phases 1 and 2	Demolition: 2 months Site Preparation: 2 months Grading: 2 months Infrastructure Installation: 8 months Paving/Site Restoration: 3 months

Project Component	Phase	Estimated Construction Schedule
Surge Tank Telemetry	Phases 1 and 2	Infrastructure Installation: 2 months Paving/Site Restoration: 1 month
Administration Building/Water Quality Laboratory	Phases 1 and 2	Building Construction: 6 months Architectural Coating: 4 months
Miscellaneous Site Upgrades	Phases 1 and 2	Demolition: 3 months Site Preparation: 2 months Grading: 2 months Infrastructure Installation: 6 months Paving/Site Restoration: 3 months
Pump Station	Phase 3	Site Preparation: 3 months Grading: 2 months Infrastructure Installation: 12 months Paving/Site Restoration: 3 months Architectural Coating: 2 months

Construction emissions associated with development of the proposed Project were quantified using equipment lists provided by Metropolitan for each Project component, as summarized in Table 4.

Table 4 Construction Equipment List

Project Component	Construction Equipment
Reservoir Cover/Liner	Three generators, one rubber tired loader, three to four pressure washers, two rough terrain forklifts, one sweeper/scrubber.
I/O Tower	Two backhoes, one bore/drill rig, one compactor, three to five compressors, one to two cranes, one to two dozers, one to two excavators, five to ten small generators, one grader, one to two rubber tired loaders, one to two skid steer loaders.
Junction Structure	Two backhoes, three compressors, one crane, one excavator, three generators, one rubber tired loader, one paving equipment, one roller, one skid steer loader, one welder.
Facility Electrical System	Two aerial lifts, one backhoe, two compressors, one crane, one excavator, one forklift, three generators, one grader, one rubber tired loader, one paving equipment, two rollers, one skid steer loader.
Standby Generator	Two aerial lifts, one backhoe, two compressors, one crane, one excavator, one forklift, three generators, one grader, one rubber tired loader, one paving equipment, two rollers, one skid steer loader.
Surge Tank Telemetry	One backhoe, two compressors, one crane, one excavator, one forklift, three generators, one grader, one rubber tired loader, one paving equipment, two rollers, one skid steer loader.
Administration Building/Water Quality Laboratory	One backhoe, two compressors, one crane, one excavator, one forklift, three generators, one grader, one rubber tired loader, one paving equipment, two rollers, one skid steer loader.
Pump Station	One backhoe, one excavator, one forklift, three generators, one rubber tired loader, one skid steer loader.
Miscellaneous Site Upgrades	One backhoe, one dozer, one excavator, one forklift, three generators, one grader, one rubber tired loader, one paving equipment, two rollers, two skid steer loaders.

CalEEMod also estimates off-site emissions from worker, vendor, and hauling truck trips. The number of worker and vendor trips were based on CalEEMod defaults and Project-specific information provided by Metropolitan where available. Based on information provided by Metropolitan, it was conservatively assumed approximately 5,000 cubic yards of soil would be imported to the Project site to construct a temporary ramp into the reservoir during construction, approximately 640 cubic yards of concrete would be imported to the Project site for seismic upgrades to the I/O tower, and approximately 9.5 million square feet of demolition debris would be hauled off site. The default trip lengths were used for most construction trips, with the exception of delivery trips for the geomembrane liner and floating cover construction materials, which were assumed to be delivered from outside SCAQMD jurisdiction and would travel up to 220 miles to the site.[5] Based on the nature of proposed construction activities, the modeling assumed less than 10 acres would be disturbed by construction on any given day.

The quantity, duration, and the intensity of construction activity influences the amount of construction emissions and their related pollutant concentrations that occur at any one time. The emission forecasts modeled for this report reflect conservative assumptions where a relatively large amount of construction is occurring in a relatively intensive manner. If construction is delayed or occurs over a longer period, criteria pollutant emissions could be reduced because of (1) a more modern and cleaner-burning construction equipment fleet mix than assumed in CalEEMod and/or (2) a less intensive buildout schedule (total annual emissions occurring over a greater number of days).

For the GHG emissions analysis, SCAQMD recommends amortizing construction-related GHG emissions over a 30-year period in conjunction with the proposed Project's operational emissions (SCAQMD 2008b). Consistent with this guidance, total construction GHG emissions resulting from the proposed Project were amortized over 30 years and added to operational GHG emissions to account for their contribution to GHG emissions over the lifetime of the Project.

Operational Emissions

Operations and maintenance activities (e.g., frequency of staff visits, standby generator testing, water usage in Administration Building/Water Quality Laboratory) would remain the same as existing conditions under the proposed Project after completion of construction. Therefore, the analysis of operational emissions focuses on the estimated increase in annual electricity usage of 450,000 kWh due to operation of the new pump station. Pursuant to the CalEEMod User Guide, "because power plants are existing stationary sources permitted by air districts and/or the USEPA, criteria pollutant emissions are generally associated with the power plants themselves, and not individual buildings or electricity users. Additionally, criteria pollutant emissions from power plants are subject to local, state, and federal control measures, which can be considered the maximum feasible level of mitigation for stack emissions." Therefore, for the purposes of this analysis, air quality impacts from increased electricity usage are not evaluated. Quantification of annual GHG emissions associated with the increased electricity usage was conducted assuming electricity would

[5] The exact origin of the new cover material is currently unknown and will be determined when the Project contractor is selected. The new cover material could come from as close as San Diego or as far away as the East Coast. Emissions generated by transport trucks in other jurisdictions outside SCAQMD would be minimal and unlikely to exceed other air districts' thresholds because only one to two trips per day would occur. Therefore, air pollutant emissions generated outside SCAQMD boundaries are not considered in this analysis. As a conservative estimate of potential air pollutant emissions generated by transport truck trips within SCAQMD jurisdiction, the maximum distance that could be traveled to reach the SCAQMD boundary (220 miles one-way from the California-Arizona border to the project site) was used.

be supplied by Southern California Edison with a carbon intensity factor of approximately 532 pounds of CO_2e per megawatt hour.

Health Risk Assessment – Toxic Air Contaminants

Health impacts associated with TACs generally result from long-term exposure to sources such as industrial processes like petroleum refining, commercial operations like gasoline stations and dry cleaners, and diesel exhaust. The following subsections describe the methodologies utilized to evaluate health impacts associated with Project-related TAC emissions during construction and operation.

Construction-Related Toxic Air Contaminant Emissions

The use of large-scale, off-road diesel equipment during Project construction may result in a temporary and short-term exposure of nearby sensitive receptors to elevated concentrations of TAC emissions. DPM would be the TAC emitted in the largest quantity during construction and is the primary TAC of concern for purposes of this analysis. The health risk analysis conservatively evaluates a reasonable, worst-case scenario in which all construction activities in Phases 1 and 2 occur concurrently. (Although this represents a reasonable scenario for analysis, simultaneous construction activities for all Project components in Phases 1 and 2 would be very unlikely to occur.)

The magnitude of health risk impacts is based on the amount of excess health risk (i.e., the additional health risk created by a project above the existing background health risk) relative to an established threshold. Health effects from carcinogenic air toxics usually are described in terms of excess cancer risk. Non-carcinogenic health risks described as either chronic or acute effects and are assessed in terms of a hazard index. A hazard index is the potential for non-cancer health effects to occur as a result of exposure to TACs. Acute effects are due to short-term exposure, while chronic effects are due to long-term exposure to a substance. The hazard index is calculated as the summation of the hazard quotients for all TACs to which an individual would be exposed.

Air Dispersion Modeling

Dispersion modeling was performed using the USEPA-approved AERMOD dispersion model, version 18081, which is part of the Air Dispersion Modeling and Risk Tool version 21081 created by CARB. AERMOD is a steady-state, multiple-source, Gaussian dispersion model that uses site-specific meteorological data (wind vector, wind speed, temperature, stability class, and mixing height) and elevations along with specific emission source locations to approximate how air pollutants would be dispersed from construction activities. Emission sources (i.e., construction activities) were added to the model at the various locations within the Project site where construction activities would occur.

AERMOD requires input of meteorological and topographic data. For this analysis, pre-processed meteorological data was obtained from the nearest SCAQMD monitoring station with available AERMOD input data, which is the Pico Rivera station, which was pre-processed with AERMET version 18081. This meteorological station is approximately 17 miles northwest from the Project site. The meteorological dataset was developed by SCAQMD for use in AERMOD and includes five years of meteorological data between 2010 and 2016 (data from 2013 is not included). Consistent with SCAQMD's Modeling Guidance for AERMOD (SCAQMD 2024), AERMOD's Urban Dispersion option was applied using an estimated population of 9,818,605 for Los Angeles County. The ten-meter national elevation dataset for the Project site vicinity was also used in the model.

Emissions from each area of construction activity were calculated using values from the CalEEMod outputs (Appendix A). AERMOD includes a variety of source types, including point, volume, and volume line sources. In order to accurately characterize the emissions generated by construction activities at the Project site, area and volume line sources[6] were used to represent construction emissions sources. Based on the anticipated construction schedule, the average workday would be approximately 10 hours, and construction activities would typically occur five days per week. Therefore, DPM emissions were assumed to be limited to the hours of 7:00 a.m. to 5:00 p.m. every weekday. The model was run to obtain the maximum one-hour and average concentration across the construction period (October 2025 through June 2035 with construction activities occurring from September 2025 through December 2027 and starting up again in January 2034 and ending in June 2035).

Receptors identified for modeling were placed at the boundary of the Project site as well as at the locations of nearby residential and school land uses within 1,000 feet of the center of the Project site. Those receptors not specifically included in the model would be exposed to less risk than the risk modeled for those receptors included in the analysis due to increased dispersion of pollutants at distances greater than the 1,000-foot radius. The nearest receptor points to the Project site were spaced at 164 feet (50 meters) apart to provide a more detailed analysis of health risk impacts because these receptors would be exposed to the highest concentrations of air pollutants. All other modeled receptor points were spaced at 328 feet (100 meters) apart. For this analysis, school land uses were modeled as residential receptors, which represents a conservative analysis because exposure would be highest at residential receptors due to the extended duration of time people are present at their residences as compared to schools.

The total PM_{10} exhaust emissions for all on-site diesel equipment for the entire construction period were divided by the number of construction workdays to determine the maximum hourly emission rate. AERMOD was used to determine the non-pollutant specific concentration at receptor points by source using a unit emission rate of 1 g/sec-m^2. The non-pollutant specific concentration was then multiplied by the actual pollutant specific emission rates (i.e., annual average in pounds per year and maximum hourly in pounds per hour) to determine the cumulative source ground-level pollutant specific concentration (GLC) at each receptor.

The estimated concentrations are not a specific prediction of the actual concentrations that would occur at any one point or any specific time over the course of the construction period. Actual concentrations are dependent on many variables, particularly the number and type of equipment working at specific distances during time periods of adverse meteorology. While maximum daily emissions for each construction phase were used to quantify risk, the actual usage of the equipment may be substantially less than what was estimated due to the nature of construction activities and equipment needs. Additionally, because an exact schedule for construction activities is not known, it was conservatively assumed all construction activities started at the earliest anticipated date, thereby exposing the most sensitive of the receptors to the greatest amount of emissions.

[6] The volume line source type within AERMOD allows the user to input linear-type sources using start and end points of the line and width of the line, as compared to the area source type, which is more appropriate for rectangular sources. Both area and volume line sources are appropriate to use to represent construction emissions because construction equipment would be both stationary and mobile within the Project site rather than a single point.

Cancer Risk Analysis

The health risk calculations were based on the standardized equations contained in the current Air Toxics Hot Spots Program Risk Assessment Guidelines (OEHHA 2015) and guidelines from the SCAQMD's South Coast AQMD Modeling Guidance for AERMOD (SCAQMD 2024). Health risk impacts were evaluated based on DPM emissions generated during Project construction activities and the potential effects on nearby residents. Average concentrations of DPM at the most-exposed sensitive receptor were used to estimate potential carcinogenic health risk. Toxicity values for the pollutants of concern were obtained from the OEHHA Air Toxics Hot Spots Program Risk Assessment Guidelines and Inhalation RELs[7] (OEHHA 2015).

Health impacts are evaluated using a dose-response assessment, which describes the relationship between the level of exposure to a substance (i.e., the dose) and the incidence or occurrence of injury (i.e., the response). The applicable exposure pathways (e.g., inhalation) were identified for the emitted substances and the receptor locations in the model; these pathways determine the exposure algorithms used to estimate dose. After the exposure pathways are identified, the applicable fate and transport algorithms were used to estimate pollutant concentrations in the applicable exposure media (e.g., air), and the exposure algorithms were used to determine the substance-specific dose at each receptor. In accordance with the OEHHA (2015) guidance, the inhalation pathway was used in the model to evaluate impacts related to DPM generated during Project construction activities. For the inhalation pathway, the dose is directly proportional to the breathing rate.

Once dose was estimated for each receptor, cancer risk was calculated based on the cancer potency factor (CPF) of DPM, age sensitivity factor (ASF), exposure duration, averaging time for lifetime cancer risk, and fraction of time spent at home (FAH) (i.e., at the location of the sensitive receptor). The CPF is specific for each pollutant and is determined through peer-reviewed scientific studies. For example, use of a CPF for DPM of 3.0×10-4 $(\mu g/m^3)^{-1}$ and a slope factor of 1.1 (parts per million-day)$^{-1}$ is recommended (OEHHA 2015).[8] The ASFs account for the greater susceptibility to the health impacts of TACs in early life as compared to adult exposure, starting from the third trimester of pregnancy to 16 years. The FAH considers the time actually spent at the sensitive receptor location for various age groups. For example, newborns are expected to reside at home for longer periods of time as compared to school-age children who spend several hours a day at school, and the elderly (e.g., retirees) are expected to spend more time at home compared to people of working age who spend several hours a day outside the home. To provide a conservative analysis, the high-end breathing rate (95th percentile) by age bin was used, and no FAH adjustment was applied. To assess a reasonable worst-case scenario, it was assumed that an individual could be exposed to construction emissions while they are a third trimester fetus through a nine-year-old child with construction activities only occurring between the third trimester and two years of age, then at ages eight and nine. (Children are more affected by DPM emissions than adults because of the greater amount of air that they breathe on a daily basis compared to their body weight.) Health risk associated with construction of the pump station was also evaluated for a child from the third trimester through the age of two years because there would be a multi-year break between Phase 2 and Phase 3.

Chronic and carcinogenic health risk were further refined by age bin based on the USEPA (2005) guidance on the use of early life exposure adjustment factors (*Supplemental Guidance for Assessing*

[7] OEHHA Reference Exposure Levels (RELs) are updated regularly at www.oehha.ca.gov/air/AllRels.html

[8] CPF and slope factors are built into the HARP2 model used for quantifying risk.

Susceptibility from Early-Life Exposure to Carcinogens, EPA/630/R-003F) and standardized dose algorithms contained in the current OEHHA guidance.

Each age group has different exposure parameters which require cancer risk to be calculated separately for each age group. The estimation of cancer risk uses the following algorithms:

Risk = Dose inhalation × Inhalation CPF × ASF (Equation 1)

Where:

Dose inhalation = CAIR × DBR × A × EF × ED × FAH / AT (Equation 2)

Inhalation CPF = inhalation cancer potency factor

ASF = age-sensitivity factor

Where:

CAIR = concentration of compound in air in micrograms per cubic meter ($\mu g/m^3$)

DBR = breathing rate in liter per kilogram of body weight per day (L/kg-body weighty/day)

A = inhalation absorption factor (1 for DPM)

EF = exposure frequency in days per year

ED = exposure duration in years

FAH = fraction of time at home

AT = time period over which exposure is averaged in days

OEHHA recommended values for the above equations were used in the Construction HRA (OEHHA 2015). Specific modeling details as well as risk for all receptors are included in Appendix B.

Additionally, cancer burden (the number of excess cancer cases that could occur in the given population) was estimated based on AERMOD results and the population density of the surrounding area using SCAQMD guidance (SCAQMD 2024). Calculations are included in Appendix B.

Non-cancer Risk Analysis

Non-cancer chronic impacts were assessed based on modeling the hazard index at sensitive receptor locations. The chronic hazard index is based on the maximum annual TAC emissions over a 12-month period of construction activity. The chronic hazard index is calculated by dividing the maximum modeled annual average concentration at the most impacted sensitive receptor by the recommended exposure limit. The recommended exposure limit is the concentration at or below which no adverse health effects are anticipated. For example, OEHHA has recommended an ambient concentration of 5 $\mu g/m^3$ as the chronic inhalation recommended exposure limit for DPM exhaust (OEHHA 2015). Therefore, a sensitive receptor exposed to an annual average DPM concentration of 5 $\mu g/m^3$ or less would not experience a chronic impact.

Non-cancer chronic impacts affect specific target organ systems (also called toxicological endpoints), such as the eye, nervous system, reproductive system, and respiratory system. The

chronic health impact with the maximum hazard index is used for impact determination. Acute health risk was not quantified because there is no acute risk associated with DPM exposure.

Operational Toxic Air Contaminant Emissions

Health impacts from TAC emissions produced during the operational phase of the proposed Project could result from the use of on-site diesel equipment, such as the standby generator. However, the health risks associated with the operation of the proposed standby generator are anticipated to be equal to or less than the risks generated by the existing standby generator because the frequency of routine testing and maintenance activities for the proposed standby generator would remain the same as under existing conditions. Therefore, operational health risks are addressed qualitatively in this analysis.

4.2 Significance Thresholds

Air Quality

The following thresholds from Appendix G of the California Environmental Quality Act (CEQA) Guidelines that pertain to air quality impacts were used to evaluate the proposed Project. Based on these criteria, the proposed Project would have a significant impact with respect to air quality if it would:

1. Conflict with or obstruct implementation of the applicable air quality plan;
2. Result in a cumulatively considerable net increase of any criteria pollutant for which the Project region is in non-attainment under an applicable federal or state ambient air quality standard;
3. Expose sensitive receptors to substantial pollutant concentrations; or
4. Result in other emissions (such as those leading to odors) adversely affecting a substantial number of people.

Metropolitan has not developed specific air quality thresholds for air quality impacts. However, Appendix G of the CEQA Guidelines states the significance criteria established by the applicable air quality management or air pollution control district may be relied upon to make the determinations. As such, the significance thresholds and analysis methodologies in the SCAQMD's guidance documents will be used in evaluating air quality impacts, including the following:

- SCAQMD (1993) CEQA Air Quality Handbook (currently being updated) and supplemental guidance
- SCAQMD (2008) Final Localized Significance Threshold Methodology
- SCAQMD (2019) South Coast AQMD Air Quality Significance Thresholds

The following subsections discuss the significance criteria established by SCAQMD to make the determinations for thresholds 1 through 3.

Consistency with Applicable Air Quality Plan

Based on SCAQMD guidance (SCAQMD 1993), consistency with the AQMP is determined based on the following two criteria:

- Whether the proposed Project would result in an increase in the frequency or severity of existing air quality violations or cause or contribute to new violations or delay the timely attainment of air quality standards or the interim emissions reductions specified in the AQMP
- Whether the proposed Project would exceed the growth assumptions in the AQMP

Regional Significance Thresholds

Table 5 presents the significance criteria established by SCAQMD to evaluate a project's potential to result in a cumulatively considerable net increase of criteria pollutants for which the SCAB is nonattainment under federal and state ambient air quality standards during construction and operation.

Table 5 SCAQMD Regional Air Quality Significance Thresholds

	Mass Daily Emissions Thresholds (pounds per day)	
Pollutant	**Construction**	**Operation**
Volatile Organic Compounds (VOC)	75	55
Nitrogen Oxides (NO_X)	100	55
Carbon Monoxide (CO)	550	550
Sulfur Oxides (SO_X)	150	150
Respirable Particulate Matter (PM_{10})	150	150
Fine Particulate Matter ($PM_{2.5}$)	55	55
Lead[1]	3	3

[1] Because the proposed Project would not involve the development of any major lead emissions sources; lead emissions are not analyzed in this report.

Source: SCAQMD 2023

Localized Significance Thresholds

SCAQMD has also developed Localized Significance Thresholds (LST) as a tool to assist lead agencies in analyzing localized air quality impacts to sensitive receptors in the vicinity of a project. The SCAQMD's LST Methodology outlines how to analyze localized impacts from common pollutants of concern including nitrogen dioxide, carbon monoxide, PM_{10}, and $PM_{2.5}$ (SCAQMD 2008a). LSTs represent the maximum emissions from a project that will not cause or contribute to an air quality exceedance of the most applicable NAAQS or CAAQS at the nearest sensitive receptor. LSTs have been developed for emissions generated in construction areas up to five acres in size. However, LSTs only apply to emissions in a fixed stationary location and are not applicable to mobile sources, such as cars on a roadway.

To minimize efforts, the SCAQMD developed mass rate lookup tables as a simple screening procedure. If a project's on-site emissions do not exceed the screening levels for any pollutant, it can be concluded the project would not cause or contribute to an adverse localized air quality impact. Screening levels are provided for various distances between the project boundary and the nearest sensitive receptor and various project site acreages. Screening levels increase as the distance between the project boundary and the nearest receiver increases because air pollutant

dispersion increases with distance. Screening levels also increase as the project site acreage increases because the distance between construction and operation sources and sensitive receptors increases with project acreage.

The LST mass rate lookup tables account for ambient pollutant concentrations based on the SRA in which a project site is located. The LST methodology includes screening levels for one-, two-, and five-acre sites at distances of 82 feet (25 meters), 164 feet (50 meters), 328 feet (100 meters), 656 feet (200 meters), 1,640 feet (500 meters).

The Project site is in SRA 11 (South San Gabriel Valley). Emissions were evaluated against the most stringent LST screening level distance. Emission thresholds for a one- and five-acre site at a distance of between 82 feet (25 meters) and 382 feet (100 meters) were used in the analysis for carbon monoxide, PM_{10}, and $PM_{2.5}$. The screening thresholds are used since it is assumed less than 10 acres would be disturbed per day during construction. Applicable LST screening levels are shown in Table 6.

Table 6 SCAQMD Localized Significance Threshold Screening Levels

	Mass Daily On-site Emissions Thresholds (pounds per day)					
	1 acre			5 acres		
Pollutant	25 meters	50 meters	100 meters	25 meters	50 meters	100 meters
NO_X/NO_2	83	84	96	183	176	184
CO	673	760	1,113	1,814	1,984	2,549
PM_{10}	5	13	29	14	43	59
$PM_{2.5}$	4	5	9	9	12	19

NO_X/NO_2 = nitrogen oxides; CO = carbon monoxide; PM_{10} = particulate matter 10 micrometers in diameter or less; $PM_{2.5}$ = fine particulate matter 2.5 micrometers in diameter or less

Source: SCAQMD 2009

Toxic Air Contaminant Emissions

SCAQMD has developed significance thresholds for TAC emissions based on health risks associated with elevated exposure to such compounds. For carcinogenic compounds, cancer risk is assessed in terms of incremental excess cancer risk (i.e., the additional cancer risk created by a project above the existing background cancer risk, evaluated at the level of an individual person) and cancer burden (i.e., the increase in the occurrence of cancer cases created by a project, evaluated at the population-level). A project would have the potential to result in a significant impact if it would generate an incremental excess cancer risk of 10 cases in one million persons (1×10^{-6}) or a cancer burden of 0.5 excess cancer cases in areas where cancer risk exceeds one in one million. Additionally, non-carcinogenic health risks are assessed in terms of a hazard index. A hazard index is the potential for non-cancer health effects to occur as a result of exposure to TACs. A project would have the potential to result in a significant impact if it would result in a chronic and/or acute hazard index greater than 1.0 (SCAQMD 2023).

Greenhouse Gas Emissions

The following thresholds from Appendix G of the California Environmental Quality Act (CEQA) Guidelines that pertain to GHG emissions impacts were used to evaluate the proposed Project. Based on these criteria, the proposed Project would have a significant impact with respect to GHG emissions if it would:

- Generate GHG emissions, either directly or indirectly, that may have a significant impact on the environment; or
- Conflict with an applicable plan, policy or regulation adopted for the purpose of reducing GHG emissions.

As outlined in Section 1.1 of Metropolitan's CAP, the CAP is compliant with the requirements of CEQA Guidelines Section 15183.5(b)(1) for a qualified GHG emissions reduction plan (Metropolitan, 2022). Therefore, Metropolitan can streamline the CEQA review of its projects using the GHG emissions analysis completed for the CAP in its Program EIR if the project's emissions are within Metropolitan's carbon budget and the project incorporates all applicable measures from the CAP. This analysis utilizes the streamlining provisions of CEQA Guidelines Section 15183.5(b)(1) to evaluate the significance of the proposed Project's GHG emissions by determining whether the proposed Project would be consistent with the CAP.

5 Air Quality Impact Analysis

Threshold AQ-1:	Would the Project conflict with or obstruct implementation of the applicable air quality plan?

Impact AQ-1 THE PROJECT WOULD POTENTIALLY CONFLICT WITH OR OBSTRUCT IMPLEMENTATION OF THE 2022 AQMP. IMPLEMENTATION OF MEASURE AQ-1 IS RECOMMENDED TO ACHIEVE CONSISTENCY WITH THE 2022 AQMP.

The Project site is within the SCAB, which falls in the jurisdiction of the SCAQMD; therefore, the applicable air quality plan is SCAQMD's 2022 AQMP. Pursuant to SCAQMD guidance, the consistency of proposed Project with the SCAQMD 2022 AQMP is evaluated based on the two criteria established by the SCAQMD *CEQA Air Quality Handbook* (SCAQMD 1993):

1. Whether the proposed Project would result in an increase in the frequency or severity of existing air quality violations or cause or contribute to new violations or delay the timely attainment of air quality standards or the interim emissions reductions specified in the AQMP
2. Whether the proposed Project would exceed the growth assumptions in the AQMP

Violations of federal and state air quality standards would occur if the proposed Project would generate emissions in excess of SCAQMD regional or LSTs set forth in Table 5 and Table 6. As shown in Table 7 under Threshold AQ-2, Phase 1 construction activities would generate NO_X emissions that would exceed the SCAQMD regional threshold. Construction activities during Phases 2 and 3 as well as Project operation would not generate emissions in excess of SCAQMD regional thresholds. However, because of the exceedance of the SCAQMD regional threshold for NO_X during Phase 1 construction activities, the Project has a high potential to result in an increase in frequency or severity of existing air quality violations, cause or contribute to a new violation, or delay timely attainment of the air quality standards in the AQMP pursuant to criterion #1.

The Project site is located in an urban area, and it is likely construction workers for the proposed Project would be sourced from the existing, regional workforce and would not indirectly result in the relocation of people to Los Angeles County. The proposed Project would not involve additional housing, require new employees, or result in additional water supplies; therefore, the proposed Project would not directly or indirectly result in population growth. The proposed Project also would not require zone changes, conditional uses, or entitlements that would modify the existing zoning or land use designations of the Project site, which was used, in part, to develop 2022 AQMP growth assumptions and emission inventories. Therefore, the proposed Project would not generate new growth that would conflict with or obstruct implementation of the 2022 AQMP pursuant to criterion #2.

In light of the above discussion, the proposed Project has a high potential to conflict with or obstruct implementation of the 2022 AQMP pursuant to criterion #1, and implementation of the following measure, AQ-1, is recommended.

Recommended Measure

Measure AQ-1 Construction Equipment

During Project construction activities, the Construction Contractor should implement the following NO_X reduction measures:

- All off-road diesel-fueled construction equipment greater than 25 horsepower should be compliant with federally mandated clean diesel engine emissions standards (USEPA Tier 4) or should be alternatively-fueled (e.g., electric); and
- Welders, pressure washers, and portable generators shall be electrically-powered, or electricity shall be pulled from the grid in lieu of using generators.

Significance after Implementation of Recommended Measure

As demonstrated in Table 8 under Threshold AQ-2, implementation of Measure AQ-1 would reduce NO_X emissions during Phase 1 construction activities to below the SCAQMD regional threshold. Therefore, with implementation of Measure AQ-1, the proposed Project would have a low potential to conflict with or obstruct implementation of the 2022 AQMP.

Threshold AQ-2:	Would the Project result in a cumulatively considerable net increase of any criteria pollutant for which the Project region is in non-attainment under an applicable federal or state ambient air quality standard?

Impact AQ-2 THE PROJECT WOULD POTENTIALLY RESULT IN A CUMULATIVELY CONSIDERABLE NET INCREASE IN OF ANY CRITERIA POLLUTANT FOR WHICH THE PROJECT REGION IS IN NON-ATTAINMENT UNDER AN APPLICABLE FEDERAL OR STATE AMBIENT AIR QUALITY STANDARD. IMPLEMENTATION OF MEASURE AQ-1 IS RECOMMENDED TO REDUCE EMISSIONS BELOW SCAQMD THRESHOLDS.

The SCAB is designated non-attainment (extreme) for 8-hour ozone NAAQS and non-attainment (serious) for the $PM_{2.5}$ NAAQS as well as partial non-attainment for lead for near-source monitors in Los Angeles County. The SCAB is also designated non-attainment for the ozone, PM_{10}, and $PM_{2.5}$ CAAQS (SCAQMD 2018a). The SCAB is designated unclassifiable or in maintenance/attainment for all other federal and State standards.

Regional Construction Emissions

Project construction would involve demolition, site preparation, grading, infrastructure installation, building construction, paving, and architectural coating. Construction of the proposed Project would result in temporary increases in air pollutant emissions from construction equipment operation on site, construction worker vehicle trips to and from the site, and haul trips to transport materials, demolition debris, and soil export to and from the Project site. The nature and magnitude of construction emissions would vary from day to day, depending primarily on the level of activity and the construction equipment in use. Table 7 summarizes the estimated maximum daily regional air pollutant emissions generated during Project construction. As shown therein, emissions generated during Phase 1 construction activities would exceed the SCAQMD regional threshold for NO_X (a precursor to ozone), primarily due to high emissions during the completion of seismic upgrades to the I/O tower, but would not exceed the remaining SCAQMD regional thresholds for criteria air pollutant emissions. Emissions generated during Phases 2 and 3 of construction activities would not exceed SCAQMD regional thresholds for criteria air pollutant

emissions. Because of the exceedance of the SCAQMD threshold for NO_X (a precursor to ozone) during Phase 1 of construction activities, Project construction would have a high potential to result in a cumulatively considerable net increase of criteria pollutants, specifically ozone. Implementation of Measure AQ-1 (outlined under Threshold AQ-1) is recommended to reduce NO_X emissions below the SCAQMD threshold.

Table 7 Proposed Project Regional Construction Criteria Air Pollutant Emissions

	Maximum Emissions (pounds per day)					
Year	**VOC**	**NO_x**	**CO**	**SO_X**	**PM_{10}**	**$PM_{2.5}$**
Phase 1 (2025-2027)						
Reservoir Cover and Liner	1	11	13	<1	12	2
I/O Tower	8	54	62	<1	4	2
Facility Electrical Upgrades	3	18	18	<1	2	1
Standby Generator	3	17	17	<1	2	1
Surge Tank Telemetry	2	14	18	<1	1	1
Administration Building and Water Quality Laboratory	2	14	18	<1	1	1
Miscellaneous Site Upgrades	2	14	17	<1	3	2
Maximum Total Daily Construction Emissions – Phase 1	20	142	164	<1	23	9
SCAQMD Regional Thresholds	75	100	550	150	150	55
Threshold Exceeded?	No	**Yes**	No	No	No	No
Phase 2 (2027)						
Junction Structure	3	20	30	<1	2	1
Facility Electrical Upgrades	3	18	18	<1	2	1
Standby Generator	4	17	17	<1	2	1
Surge Tank Telemetry	2	14	18	<1	1	1
Administration Building and Water Quality Laboratory	2	14	18	<1	1	1
Miscellaneous Site Upgrades	2	14	17	<1	3	2
Maximum Total Daily Construction Emissions – Phase 2	14	97	119	<1	10	6
SCAQMD Regional Thresholds	75	100	550	150	150	55
Threshold Exceeded?	No	No	No	No	No	No
Phase 3 (2034-2035)						
Pump Station	1	4	6	<1	1	<1
Maximum Total Daily Construction Emissions – Phase 3	1	4	6	<1	1	<1
SCAQMD Regional Thresholds	75	100	550	150	150	55
Threshold Exceeded?	No	No	No	No	No	No

VOC = volatile organic compounds; NO_X = nitrogen oxide; CO = carbon monoxide; SO_X = sulfur oxide; PM_{10} = particulate matter with a diameter no more than 10 microns; $PM_{2.5}$ = particulate matter with a diameter no more than 2.5 microns

See Appendix A for CalEEMod outputs.

Operational Emissions

Operations and maintenance activities at Garvey Reservoir, including the frequency of staff visits, monthly testing of the standby generator, and water usage in the Administration Building and Water Quality Laboratory would remain the same as existing conditions and would result in no net change in criteria air pollutant emissions once construction activities are completed. Although the proposed pump station would result in a net increase in electricity consumption of approximately 450,000 kWh, air pollutant emissions associated with electricity usage are attributed to power plants themselves rather than individual projects, as discussed in Section 4.1, *Methodology*. Therefore, Project operation would not result in a cumulatively considerable net increase of any criteria pollutant for which the Project region is in non-attainment under an applicable federal or state ambient air quality standard, and no impact would occur.

Recommended Measure

Refer to Measure AQ-1 outlined under Threshold AQ-1.

Significance after Implementation of Recommended Measure

Table 8 presents estimated regional emissions during Phase 1 of Project construction with implementation of Measure AQ-1. As shown therein, implementation of Measure AQ-1 would reduce NO_X emissions (a precursor to ozone) during Phase 1 construction activities to below the SCAQMD regional threshold. Therefore, with implementation of Measure AQ-1, the proposed Project would have a low potential to result in a cumulatively considerable net increase of any criteria pollutant for which the Project region is in non-attainment under an applicable federal or state ambient air quality standard (i.e., ozone and $PM_{2.5}$).

Table 8 Proposed Project Regional Construction Criteria Air Pollutant Emissions – Phase 1 with Implementation of Measure AQ-1

	Maximum Mitigated Emissions (pounds per day)					
Year	**VOC**	**NO_x**	**CO**	**SO_X**	**PM_{10}**	**$PM_{2.5}$**
Phase 1 (2025-2027)						
Reservoir Cover and Liner	<1	4	12	<1	11	2
I/O Tower	2	13	60	<1	2	1
Facility Electrical Upgrades	1	5	17	<1	1	<1
Standby Generator	1	5	17	<1	1	<1
Surge Tank Telemetry	<1	5	19	<1	1	<1
Administration Building and Water Quality Laboratory	<1	5	19	<1	<1	<1
Miscellaneous Site Upgrades	<1	4	18	<1	2	1
Maximum Total Daily Construction Emissions – Phase 1	5	42	162	<1	19	4
SCAQMD Regional Thresholds	75	100	550	150	150	55
Threshold Exceeded?	No	No	No	No	No	No

VOC = volatile organic compounds; NO_X = nitrogen oxide; CO = carbon monoxide; SO_X = sulfur oxide; PM_{10} = particulate matter with a diameter no more than 10 microns; $PM_{2.5}$ = particulate matter with a diameter no more than 2.5 microns

See Appendix A for CalEEMod outputs.

Threshold AQ-3:	Would the Project expose sensitive receptors to substantial pollutant concentrations?

Impact AQ-3 THE PROPOSED PROJECT WOULD POTENTIALLY EXPOSE SENSITIVE RECEPTORS TO SUBSTANTIAL TAC CONCENTRATIONS. IMPLEMENTATION OF MEASURE AQ-1 IS RECOMMENDED TO REDUCE EMISSIONS BELOW APPLICABLE THRESHOLDS.

As discussed in Section 2.1, *Air Quality Background*, sensitive receptors in the vicinity of the Project site include residential neighborhoods to the west, north, south, and east; Hillcrest Elementary School to the east across South Orange Avenue; and Garvey Ranch Park to the north.

Localized Construction Emissions

Criteria Air Pollutant Emissions

Construction of the proposed Project would result in temporary increases in local air pollutant concentrations as a result of the use of heavy-duty construction equipment and vehicle trips generated by construction workers and the transport of construction materials, demolition debris, and soil. Particulate matter emissions would primarily result from site preparation and grading activities, and nitrogen dioxide and carbon monoxide emissions would primarily result from the use of construction equipment and truck trips. Construction emissions would vary substantially from day to day, depending on the level of activity, the specific type of operation and, for dust, the prevailing weather conditions.

Table 9 summarizes maximum daily on-site emissions associated with construction of the proposed Project. Because construction activities would be dispersed throughout the approximately 142-acre Project site, maximum on-site emissions from each major construction activity area were estimated at the nearest sensitive receptors to that area during each of the three main construction phases. As shown in Table 9, on-site construction emissions of NO_X, carbon monoxide, and $PM_{2.5}$ would not exceed the SCAQMD LSTs during any phase of construction. However, on-site emissions of PM_{10} would exceed the applicable SCAQMD LSTs during Phase 1 if all Project components are under construction on the same day.[9] Therefore, the proposed Project has high potential to expose sensitive receptors to substantial criteria pollutant concentrations during construction, and implementation of Measure AQ-1 (outlined under Threshold AQ-1) is recommended.

[9] Simultaneous construction of all Project components in Phase 1 on the same day represents a reasonable, worst-case scenario for purposes of this analysis. Although considered a reasonable scenario for this evaluation, it is unlikely to actually occur during Project construction, and localized air pollutant emissions are therefore likely to be lower than those estimated in this report.

Table 9 Proposed Project Localized Criteria Air Pollutant Emissions – Construction

Phase	Maximum On-site Emissions (pounds per day)			
	NO_X/NO_2	CO	PM_{10}	$PM_{2.5}$
Reservoir Cover and Liner (Phase 1)				
Reservoir Cover and Liner	8	11	11	2
Total Maximum Daily On-site Emissions – Reservoir Cover and Liner	**8**	**11**	**11**	**2**
Applicable SCAQMD LST (5-Acre Work Site, 100 Meters to Nearest Sensitive Receptor)	184	2,549	59	19
Threshold Exceeded?	No	No	No	No
Eastern-Central Yard (Administration Building, Water Quality Laboratory, Standby Generator, Junction Structure) (Phases 1 and 2)				
Junction Structure	20	30	2	1
Facility Electrical Upgrades	18	16	1	1
Standby Generator	17	16	1	1
Administration Building/Water Quality Laboratory	14	16	1	<1
Total Maximum Daily On-site Emissions – Eastern-Central Yard	**68**	**79**	**51**	**3**
Applicable SCAQMD LST (1-Acre Work Site, 25 Meters to Nearest Sensitive Receptor)	83	673	5	4
Threshold Exceeded?	No	No	No	No
I/O Tower and Surge Tank (Phase 1)				
I/O Tower	53	56	2	2
Surge Tank Telemetry	14	16	1	<1
Total Maximum Daily On-site Emissions – I/O Tower and Surge Tank	**67**	**72**	**3**	**2**
Applicable SCAQMD LST (1-Acre Work Site, 100 Meters to Nearest Sensitive Receptor)	96	1,113	29	9
Threshold Exceeded?	No	No	No	No
Sitewide (Phase 1)				
Reservoir Cover and Liner	8	11	11	2
I/O Tower	53	56	2	2
Surge Tank Telemetry	14	16	1	<1
Facility Electrical Upgrades	18	16	1	1
Standby Generator	17	16	1	1
Administration Building/Water Quality Laboratory	14	16	1	<1
Miscellaneous Site Upgrades	14	17	2	1
Combined Daily	**138**	**148**	**19**	**7**
Applicable SCAQMD LST (5-Acre Work Site, 25 Meters to Nearest Sensitive Receptor)	183	1,814	14	9
Threshold Exceeded?	No	No	Yes	No

Phase	Maximum On-site Emissions (pounds per day)			
	NO_X/NO_2	CO	PM_{10}	$PM_{2.5}$
Sitewide (Phase 2)				
Junction Structure	20	30	2	1
Surge Tank Telemetry	14	16	1	<1
Facility Electrical Upgrades	18	16	1	1
Standby Generator	17	16	1	1
Administration Building/Water Quality Laboratory	14	16	1	<1
Miscellaneous Site Upgrades	14	17	2	1
Combined Daily[1]	**97**	**111**	**8**	**4**
Applicable SCAQMD LST (5-Acre Work Site, 25 Meters to Nearest Sensitive Receptor)	183	1,814	14	9
Threshold Exceeded?	No	No	No	No
Pump Station (Phase 3)				
Pump Station	3	6	<1	<1
Total Maximum Daily On-site Emissions – Pump Station	**3**	**6**	**<1**	**<1**
Applicable SCAQMD LST (1-Acre Work Site, 25 Meters to Nearest Sensitive Receptor)	83	673	5	4
Threshold Exceeded?	No	No	No	No

NO_X/NO_2 = nitrogen oxides; CO = carbon monoxide; PM_{10} = particulate matter 10 micrometers in diameter or less; $PM_{2.5}$ = particulate matter 2.5 micrometers in diameter or less; SCAQMD = South Coast Air Quality Management District; LST = Localized Significance Threshold

Note: Some numbers may not add up precisely due to rounding considerations.

[1] Estimated total PM_{10} emissions are 4.76 pounds per day, which does not exceed the threshold of 5 pounds per day.

Source: See CalEEMod worksheets in Appendix A.

Fugitive Dust Emissions

Project construction activities would result in temporary generation of fugitive dust emissions, primarily from site preparation and excavation activities, transport of soil, and movement of heavy-duty construction equipment on unpaved surfaces. Construction contractors for the proposed Project would be required to comply with SCAQMD Rule 403. Rule 403 is intended to reduce the amount of particulate matter in the air due to fugitive dust sources by requiring actions to minimize the creation of fugitive dust. Rule 403 includes the following measures and is applicable as necessary to the proposed Project:

- Nontoxic chemical soil stabilizers shall be applied according to manufacturers' specifications to all inactive construction areas (previously graded areas inactive for 10 days or more).
- Active sites shall be watered at least twice daily. Locations where grading is to occur shall be thoroughly watered prior to earthmoving.
- All trucks hauling dirt, sand, soil, or other loose materials shall be covered or have at least 0.6 meter (two feet) of freeboard (vertical space between the top of the load and top of the trailer) maintained in accordance with the requirements of California Vehicle Code Section 23114.

Adherence to the dust suppression requirements included in Rule 403, which are incorporated by reference in Section 01065 of Metropolitan's construction contractor specifications, would minimize the creation of fugitive dust and the associated potential to expose sensitive receptors to

localized fugitive dust emissions. Therefore, Project construction would not expose sensitive receptors to substantial concentrations of fugitive dust emissions, and impacts would be less than significant.

Toxic Air Contaminant Emissions

Construction of the proposed Project would result in temporary increases in local TAC emissions as a result of DPM generated by heavy-duty construction equipment and heavy, diesel-fueled truck trips for transport of demolition debris and soil. Table 10 presents the maximum estimated total cancer and non-cancer risk for the maximum exposed residential receptor of the 468 receptors that were modeled.[10] The cancer and chronic risks shown in Table 10 represent the maximum risk at the location of the maximum exposed residential receptor for each individual project component as well as the maximum combined risk for all activities at the overall maximum exposed residential receptor. As shown in Table 10, the cancer risk from Project construction activities at nearby residential and school receptors (i.e., the additional individual cancer risk created by Project construction activities above the existing background cancer risk) would exceed the SCAQMD threshold of 10 excess cancer cases in one million people. In addition, the maximum chronic hazard index (i.e., the potential for non-cancer health effects to occur as a result of exposure to TACs) would exceed the SCAQMD threshold of 1. [11]

[10] As noted in Section 3.2.2, *Methodology*, school land uses were modeled as residential receptors in addition to residences, which represents a conservative analysis because exposure would be highest at residential receptors due to the extended duration of time people are present at their residences as compared to schools.

[11] The health risk analysis incorporates reasonable, worst-case assumptions related to construction timing, breathing rates, and age of exposed persons. As such, actual health risk exposure for individual persons may be lower than estimated herein based on actual construction timing and the age of exposed persons.

Table 10 Estimated Cancer and Non-cancer Health Risk at Maximum Exposed Residential Receptor – Project Construction[1]

Project Component	Cancer Risk (per million)[1]	Chronic Risk Hazard Quotient[2]
Phases 1 through 3 (Combined Exposure of a Child from 3rd Trimester Fetus to Age 9)		
Reservoir Cover and Liner	2.36	0.01
I/O Tower	10.6	0.12
Junction Structure	28.16	0.57
Facility Electrical Upgrades	20.16	0.39
Standby Generator	16.96	0.30
Surge Tank Telemetry	0.17	0.03
Administration Building and Water Quality Laboratory	8.10	0.25
Miscellaneous Site Upgrades	2.34	0.07
Pump Station	1.12	0.07
Cumulative Risk[3]	**75.92**	**1.44**
Risk Criteria	10 per million	1.0
Exceed Criteria?	Yes	Yes
Phase 3 Only (Exposure of a Child from 3rd Trimester Fetus to Age 2)		
Pump Station	**6.54**	**0.07**
Risk Criteria	10 per million	1.0
Exceed Criteria?	No	No

[1] The maximum exposed residential receptor is a single-family residence located at 1400 South Orange Avenue southeast of the intersection of Tegner Drive and South Orange Avenue in Monterey Park.

The cancer risk sum for construction activities is based on intermittent exposure over a period of nine years. Age groups exposed conservatively include 3rd trimester, 0 to 2 years, and 2 to 16 years. The cancer risk values shown represent the maximum risk to which a receptor in that age group could be exposed during Project construction activities.

[2] The chronic risk hazard quotient is a unitless value that is based on the highest annual concentration, and it is not dependent on age sensitivity factors or age groups.

[3] Cancer and chronic risks associated with construction of each Project component would vary at any given individual receptor based on their distance from the Project component. For each Project component, cancer and chronic risks are reported for the maximum exposed residential receptor for that component. However, construction activities would be dispersed throughout the approximately 142-acre Project site at varying distances from any given individual receptor. Therefore, the estimated maximum cancer and chronic risks for each Project component are not added together because no single individual receptor would be exposed to the maximum risks from all Project components. Instead, the cumulative cancer and chronic risks represent the highest combined risk from all Project construction activities experienced by the overall maximum exposed residential receptor.

Source: Appendices B and C

Cancer burden resulting from Project construction activities within the zone of impact (i.e., the Project-related increase in the population-wide occurrence of cancer cases) would be approximately 0.28 excess cancer cases (Appendix B), which would not exceed the SCAQMD threshold of 0.5.

Because Project construction activities would result in an incremental excess cancer risk and chronic hazard risk in exceedance of SCAQMD thresholds, Project construction has a high potential to expose sensitive receptors to substantial TAC concentrations, and implementation of Measure AQ-1 (outlined under Threshold AQ-1) is recommended.

Localized Operational Emissions

As discussed under Threshold AQ-2, operations and maintenance activities at Garvey Reservoir would remain the same as existing conditions and would result in no net change in criteria air pollutant emissions once construction activities are completed. The proposed Project includes replacement of the existing standby generator with a new standby generator. Standby generators produce localized criteria air pollutant and TAC emissions such as DPM during routine testing and emergency operation. Monthly testing of the standby generator would be conducted at the same frequency as the existing generator and would therefore not result in a net increase in TAC emissions. Pursuant to SCAQMD rules and regulations, including SCAQMD Rule 1401 (New Source Review of Toxic Air Contaminants), Metropolitan would be required to obtain a permit from SCAQMD for the standby generator, which would ensure the generator is constructed and operated in accordance with applicable SCAQMD rules and regulations. Additionally, the new generator would replace an existing, less efficient generator. Therefore, Project operation would not expose sensitive receptors to substantial pollutant concentrations, and no impact would occur.

Recommended Measure

Refer to Measure AQ-1 outlined under Threshold AQ-1.

Significance after Implementation of Recommended Measure

Table 11 presents estimated localized criteria air pollutant emissions during Project construction with implementation of Measure AQ-1. As shown therein, implementation of Measure AQ-1 would reduce PM_{10} emissions during sitewide Phase 1 construction activities to below the applicable SCAQMD LSTs. In addition, Table 12 shows estimated cancer and non-cancer health risks at the maximum exposed residential receptor resulting from Project construction with implementation of Measure AQ-1. As shown therein, implementation of Measure AQ-1 would reduce cancer and non-cancer health risk associated with Project construction activities to below SCAQMD thresholds. Therefore, with implementation of Measure AQ-1, the proposed Project would have a low potential to expose sensitive receptors to substantial pollutant concentrations.

Table 11 Proposed Project Mitigated Localized Criteria Air Pollutant Emissions - Construction

Phase	Maximum On-site Emissions (lbs/day)[1]			
	NO_X/NO_2	CO	PM_{10}	$PM_{2.5}$
Sitewide (Phase 1)				
Reservoir Cover and Liner	1	9	5	<1
I/O Tower	12	56	<1	<1
Facility Electrical Upgrades	5	15	<1	<1
Standby Generator		15	<1	<1
Surge Tank Telemetry	4	16	<1	<1
Administration Building and Water Quality Laboratory	5	17	<1	<1
Miscellaneous Site Upgrades	4	17	2	1
Total Maximum Daily On-site Emissions – Sitewide[1]	**31**	**145**	**7**	**1**
Applicable SCAQMD LST (5-Acre Work Site, 25 Meters to Nearest Sensitive Receptor)	183	1,814	14	9
Threshold Exceeded?	No	No	No	No

NO_X/NO_2 = nitrogen oxides; CO = carbon monoxide; PM_{10} = particulate matter 10 micrometers in diameter or less; $PM_{2.5}$ = particulate matter 2.5 micrometers in diameter or less; SCAQMD = South Coast Air Quality Management District; LST = Localized Significance Threshold

Note: Some numbers may not add up precisely due to rounding considerations.

[1] Combined daily for a 5-acre site at 25 meters assumes that all phases except the pump station would occur on the same day and the closest receptor is within the 25-meter range.

Source: See CalEEMod worksheets in Appendix A.

Table 12 Estimated Mitigated Cancer and Non-cancer Health Risk at Maximum Exposed Residential Receptor – Project Construction[1]

Project Component	Cancer Risk (per million)[1]	Chronic Risk Hazard Quotient[2]
Phases 1 through 3 (Combined Exposure of a Child from 3rd Trimester Fetus to Age 9)		
Reservoir Cover and Liner	1.09	0.01
I/O Tower	0.43	<0.01
Junction Structure	2.76	0.05
Facility Electrical Upgrades	1.33	0.02
Standby Generator	1.13	0.02
Surge Tank Telemetry	0.02	<0.01
Administration Building and Water Quality Laboratory	1.32	0.02
Miscellaneous Site Upgrades	0.23	0.01
Pump Station	0.15	0.01
Cumulative Risk	**6.59**	**0.11**
Risk Criteria	10 per million	1.0
Exceed Criteria?	No	No

Project Component	Cancer Risk (per million)[1]	Chronic Risk Hazard Quotient[2]
Phase 3 Only (Exposure of a Child from 3rd Trimester Fetus to Age 2)		
Pump Station	**0.77**	**0.01**
Risk Criteria	10 per million	1.0
Exceed Criteria?	No	No

[1] The maximum exposed residential receptor is a single-family residence located at 1400 South Orange Avenue, southeast of the intersection of Tegner Drive and South Orange Avenue in Monterey Park.

The cancer risk sum for construction activities is based on intermittent exposure over a period of nine years. Age groups exposed conservatively include 3rd trimester, 0 to 2 years, and 2 to 16 years. The cancer risk values shown represent the maximum risk to which a receptor in that age group could be exposed during Project construction activities.

[2] The chronic risk hazard quotient is a unitless value that is based on the highest annual concentration, and it is not dependent on age sensitivity factors or age groups.

Source: Appendices B and C

Threshold AQ-4: Would the Project result in other emissions (such as those leading to odors) adversely affecting a substantial number of people?

Impact AQ-4 THE PROPOSED PROJECT WOULD NOT RESULT IN OTHER EMISSIONS (SUCH AS THOSE LEADING TO ODORS) ADVERSELY AFFECTING A SUBSTANTIAL NUMBER OF PEOPLE.

The Project would generate oil and diesel fuel odors during construction from equipment use as well as odors related to asphalt paving. The odors would be limited to the construction period and would be intermittent and temporary. Furthermore, these odors would dissipate rapidly with distance from in-use construction equipment. Accordingly, Project construction would have a low potential to result in other emissions (such as those leading to odors) adversely affecting a substantial number of people.

The proposed Project does not include components with the potential to generate other emissions, such as those leading to odors, during operation. Therefore, Project operation would have no potential to result in other emissions (such as those leading to odors) adversely affecting a substantial number of people.

6 Greenhouse Gas Impact Analysis

Threshold GHG-1: Would the Project generate greenhouse gas emissions, either directly or indirectly, that may have a significant impact on the environment?

Impact GHG-1 THE PROPOSED PROJECT WOULD NOT GENERATE GHG EMISSIONS, EITHER DIRECTLY OR INDIRECTLY, THAT MAY HAVE A SIGNIFICANT IMPACT ON THE ENVIRONMENT.

As outlined in Section 1.1 of Metropolitan's CAP, the CAP meets the requirements of CEQA Guidelines Section 15183.5(b)(1) for a qualified GHG emissions reduction plan (Metropolitan 2022). As a result, pursuant to CEQA Guidelines Section 15064.4, 15183.5(a), and 15183.5(b), Metropolitan can streamline the CEQA review of its projects using the GHG emissions analysis completed for the CAP if the proposed Project is consistent with the adopted CAP. Therefore, this analysis relies on the streamlining provisions of CEQA Guidelines Section 15183.5 to determine whether the Project would generate GHG emissions that may have a significant impact on the environment by evaluating whether the Project would be consistent with the CAP. The Project would be consistent with the CAP if the Project emissions are within Metropolitan's carbon budget and the Project incorporates all applicable reduction measures from the CAP.

Construction Emissions

Construction of the proposed Project would result in temporary increases in GHG emissions as a result of the use of heavy-duty construction equipment and vehicle trips generated by construction workers and the transport of construction materials, demolition debris, and soil. Estimated GHG emissions generated during Project construction are shown in Table 13. As shown therein, GHG emissions during Project construction would be highest during the completion of seismic upgrades to the I/O tower. In total, Project construction would generate approximately 3,932 MT of CO_2e, or approximately 131 MT of CO_2e when amortized over a 30-year period pursuant to SCAQMD guidance.

Table 13 Estimated GHG Emissions – Project Construction

Project Component	Emissions (MT of CO_2e per year)
Reservoir Cover and Liner	1,054
I/O Tower	1,044
Junction Structure	337
Facility Electrical Upgrades	300
Standby Generator	394
Surge Tank Telemetry	97
Administration Building and Water Quality Laboratory	304
Miscellaneous Site Upgrades	241
Pump Station	161
Total Construction Emissions	3,932
Annual Construction Emissions (amortized over 30 years)	131

MT = metric tons; CO_2e = carbon dioxide equivalents

[1] SCAQMD recommends amortizing construction emissions over the lifetime of a project, typically defined as 30 years, and adding the amortized construction emissions to operational emissions to estimate annual emissions

See Appendix A for CalEEMod outputs.

Combined Construction and Operational Emissions

Operations and maintenance activities (e.g., frequency of staff visits, standby generator testing, water usage in Administration Building/Water Quality Laboratory) would remain the same as existing conditions under the proposed Project after completion of construction. Therefore, the only source of net new GHG emissions associated with the proposed Project is the anticipated increase in electricity consumption due to installation of the proposed pump station. Estimated GHG emissions generated during Project operation are shown in Table 14. To obtain an estimate of total annual GHG emissions associated with the proposed Project, annual operational emissions were added to amortized construction emissions pursuant to SCAQMD guidance. As shown in Table 14, the proposed Project would generate approximately 240 MT of CO_2e per year in total.

Table 14 Estimated GHG Emissions – Project Operation with Amortized Construction Emissions

Emission Sources	GHG Emissions (MT of CO_2e per year)
Energy Consumption	109
Total Operational Emissions	109
Amortized Construction Emissions[1]	131
Total Emissions (Annual Construction [amortized] + Annual Operational	240

MT = metric tons; CO2e = carbon dioxide equivalents

[6] See Table 13. SCAQMD recommends amortization of construction emissions over the lifetime of a project, typically defined as 30 years, and adding the amortized construction emissions to operational emissions to estimate yearly emissions. Operational emissions are not amortized because these emissions are already estimated on a yearly basis

See Appendix A for CalEEMod outputs.

The proposed Project includes sustainability features that would reduce GHG emissions below the conservative GHG emissions estimate provided in Table 14. These design features include, but are not limited to, installing LED lighting in the fixtures along the access bridge to the I/O tower and upgrading the water heater, HVAC system, and other fixtures/appliances in the Administration Building and Water Quality Laboratory to be more energy- and water-efficient.

Summary of Impacts

As noted previously, Metropolitan adopted a CAP to address and mitigate organization-wide GHG emissions associated with construction and operational activities. Metropolitan's annual 2023 CAP Progress Report states approximately 9,252,380 MT of CO_2e remains in the carbon budget for 2022-2045 years (Metropolitan 2024). As shown in Table 14, the proposed Project would generate approximately 240 MT of CO_2e per year in total, or approximately 5,022 MT of CO_2e from the year of Project buildout (2035) through 2045,[12] which is within the remaining quantified carbon budget as of 2022. Pursuant to the annual CAP GHG emissions inventory and reporting procedures, GHG emissions generated by proposed Project activities are tracked as part of Metropolitan's overall carbon budget through data collected from construction contractors, utility and service providers (electricity, natural gas, water, wastewater, and solid waste), and the employee commute survey. In addition, organization-wide CAP measures are being implemented to reduce Metropolitan's GHG emissions over time such that GHG emissions remain within the carbon budget.

[12] 3,932 MT of CO_2e from construction activities + (109 MT of CO_2e per year for electricity consumption * 10 years)

As mentioned previously, the CAP includes a suite of measures to reduce GHG emissions. These measures include conducting studies, enacting administrative policies and programs, upgrading fleet vehicles and deploying alternative fuel technologies, installing battery energy storage systems at specific treatment plants, increasing energy efficiency at pumping plants, incentivizing employees' use of low carbon transportation options, increasing waste diversion, promoting water use efficiency among Metropolitan's customers, and evaluating carbon sequestration opportunities. The majority of reduction measures are intended to be enacted at an organizational level and are not broadly applicable to individual Metropolitan projects. However, the CAP has two measures specifically aimed toward projects associated with buildings, warehouses, and/or facilities. CAP Measure DC-2 involves reducing natural gas emissions through electrification of buildings and equipment (50 percent by 2030 and 100 percent by 2045), and CAP Measure EE-1 involves converting interior and exterior lighting to LED technologies (50 percent by 2030 and 100 percent by 2045). The water heater and HVAC equipment in the Administration Building and Water Quality Laboratory are currently powered by electricity, and the upgraded water heater and HVAC equipment would also be all-electric, consistent with CAP Measure DC-2. In addition, the proposed Project would also incorporate CAP Measure EE-1 by installing exterior LED lighting in the lighting fixtures along the I/O tower access bridge and within the Administration Building and Water Quality Laboratory. As a result, the proposed Project would not conflict with GHG emissions reduction measures listed in the CAP.

In summary, the proposed Project's GHG emissions are within Metropolitan's carbon budget, and the proposed Project incorporates all applicable CAP reduction measures. Therefore, pursuant to CEQA Guidelines Section 15064.4 and 15183.5, the proposed Project would not directly or indirectly generate GHG emissions that may have a significant impact on the environment, and impacts would be less than significant.

Threshold GHG-2: Would the Project conflict with an applicable plan, policy, or regulation adopted for the purpose of reducing the emissions of GHGs?

IMPACT GHG-2 THE PROPOSED PROJECT WOULD NOT CONFLICT WITH AN APPLICABLE PLAN, POLICY, OR REGULATION ADOPTED FOR THE PURPOSE OF REDUCING THE EMISSIONS OF GHGS.

Applicable plans, policies, and regulations consist of Metropolitan's CAP, SB 32, EO B-55-18, the 2022 Scoping Plan, and AB 1279. As discussed under threshold GHG-1, the proposed Project would be consistent with Metropolitan's CAP because 1) estimated GHG emissions generated by proposed Project activities are within Metropolitan's carbon budget and would be tracked as part of Metropolitan's overall carbon budget with organization-wide CAP measures implemented to reduce Metropolitan's GHG emissions over time such that GHG emissions remain within the carbon budget; and 2) the proposed Project would incorporate applicable CAP reduction measures. Also, by being consistent with the CAP, the proposed Project would also be consistent with state GHG emission reduction plans, policies, and regulations, such as the 2022 Scoping Plan, SB 32, EO B-55-18, and AB 1279 because the GHG emission reduction targets established by these plans, laws, and policies are incorporated into and consistent with Metropolitan's GHG emissions reduction targets. Therefore, the proposed Project would not conflict with any applicable plan, policy or regulation of an agency adopted for the purpose of reducing GHG emissions, and no impact would occur.

7 References

California Air Resources Board (CARB). 2005. Air Quality and Land Use Handbook: A Community Health Perspective. April 2005. https://www.aqmd.gov/docs/default-source/ceqa/handbook/california-air-resources-board-air-quality-and-land-use-handbook-a-community-health-perspective.pdf (accessed March 2024).

_____. 2020. Ambient Air Quality Standards. https://ww2.arb.ca.gov/sites/default/files/2020-07/aaqs2.pdf (access March 2024).

_____. 2022. 2022 Scoping Plan for Achieving Carbon Neutrality. November 16, 2022. https://ww2.arb.ca.gov/sites/default/files/2022-12/2022-sp.pdf (accessed March 2024).

_____. 2024a. Overview: Diesel Exhaust & Health. https://ww2.arb.ca.gov/resources/overview-diesel-exhaust-and-health (accessed March 2024).

_____. 2024b. Top 4 Summary: Select Pollutant, Years, & Area. https://www.arb.ca.gov/adam/topfour/topfour1.php (accessed March 2024).

California, State of. 2018. California's Fourth Climate Change Assessment Los Angeles Region Report. http://www.climateassessment.ca.gov/regions/docs/20180928-LosAngeles.pdf (accessed March 2024).

Intergovernmental Panel on Climate Change (IPCC). 2021. Climate Change 2021: The Physical Science Basis. Contribution of Working Group I to the Sixth Assessment Report of the Intergovernmental Panel on Climate Change [Masson-Delmotte, V., P. Zhai, A. Pirani, S. L. Connors, C. Péan, S. Berger, N. Caud, Y. Chen, L. Goldfarb, M. I. Gomis, M. Huang, K. Leitzell, E. Lonnoy, J.B.R. Matthews, T. K. Maycock, T. Waterfield, O. Yelekçi, R. Yu and B. Zhou (eds.)] Cambridge University Press. https://www.ipcc.ch/report/ar6/wg1/downloads/report/IPCC_AR6_WGI_Full_Report.pdf (accessed March 2024).

_____. 2023. AR6 Synthesis Report: Climate Change 2023. March. https://www.ipcc.ch/report/sixth-assessment-report-cycle/ (accessed March 2024).

Metropolitan Water District of Southern California, The (Metropolitan). 2022. Climate Action Plan. May 2022. https://www.mwdh2o.com/media/12469/final-cap.pdf (accessed March 2024).

_____. 2024. 2023 Climate Action Plan Implementation Progress Report. April 2024. https://www.mwdh2o.com/addressing-climate-change/climate-action/ (accessed April 2024).

Monterey Park, City of. 2012. City of Monterey Park Climate Action Plan. January 2012. https://www.montereypark.ca.gov/242/Climate-Action-Plan (accessed March 2024).

National Oceanic and Atmospheric Administration. 2024. "Annual 2023 Global Climate Report." March 8, 2024. https://www.ncei.noaa.gov/access/monitoring/monthly-report/global/202313 (accessed March 2024).

Office of Environmental Health Hazard Assessment (OEHHA). 2015. Air Toxics Hot Spots Program Risk Assessment Guidelines - The Air Toxics Hot Spots Program Guidance Manual for Preparation of Health Risk Assessments. February. https://oehha.ca.gov/media/downloads/crnr/2015guidancemanual.pdf (accessed March 2024).

South Coast Air Quality Management District (SCAQMD). 1993. *CEQA Air Quality Handbook*. April 1993.

_____. 2008a. *Final Localized Significance Threshold Methodology*. July 2008. http://www.aqmd.gov/docs/default-source/ceqa/handbook/localized-significance-thresholds/final-lst-methodology-document.pdf (accessed March 2024).

_____. 2008b. Interim CEQA GHG Significance Threshold for Stationary Sources, Rules and Plans. December 5, 2008. http://www.aqmd.gov/docs/default-source/ceqa/handbook/greenhouse-gases-(ghg)-ceqa-significance-thresholds/ghgboardsynopsis.pdf?sfvrsn=2 (accessed March 2024).

_____. 2009. Appendix C – Mass Rate LST Look-up Tables. Last modified: October 21, 2009. http://www.aqmd.gov/docs/default-source/ceqa/handbook/localized-significance-thresholds/appendix-c-mass-rate-lst-look-up-tables.pdf?sfvrsn=2 (accessed March 2024).

_____. 2018a. National Ambient Air Quality Standards (NAAQS) and California Ambient Air Quality Standards (CAAQS) Attainment Status for South Coast Air Basin. https://www.aqmd.gov/docs/default-source/clean-air-plans/air-quality-management-plans/naaqs-caaqs-feb2016.pdf?sfvrsn=23 (accessed March 2024).

_____. 2018b. MATES V Multiple Air Toxics Exposure Study. http://www.aqmd.gov/home/air-quality/air-quality-studies/health-studies/mates-v (accessed March 2024).

_____. 2022. 2022 Air Quality Management Plan. December 2, 2022. http://www.aqmd.gov/docs/default-source/clean-air-plans/air-quality-management-plans/2022-air-quality-management-plan/final-2022-aqmp/final-2022-aqmp.pdf?sfvrsn=10 (accessed March 2024).

_____. 2023. South Coast AQMD Air Quality Significance Thresholds. March 2023. https://www.aqmd.gov/docs/default-source/ceqa/handbook/south-coast-aqmd-air-quality-significance-thresholds.pdf?sfvrsn=25 (accessed March 2024).

_____. 2024. South Coast AQMD Modeling Guidance for AERMOD. https://www.aqmd.gov/home/air-quality/meteorological-data/modeling-guidance (accessed March 2024).

United States Environmental Protection Agency (USEPA). 2005. Supplemental Guidance for Assessing Susceptibility from Early-Life Exposure to Carcinogens. https://www3.epa.gov/airtoxics/childrens_supplement_final.pdf (accessed March 2024).

_____. 2013. Policy Assessment for the Review of the Lead National Ambient Air Quality Standards, External Review Draft. https://www3.epa.gov/ttn/naaqs/standards/pb/data/010913_pb-draft-pa.pdf (accessed March 2024).

_____. 2023a. “What is Ozone?” Last updated: Julu 11, 2023. https://www.epa.gov/ozone-pollution-and-your-patients-health/what-ozone (accessed March 2024).

_____. 2023b. "Ground-level Ozone Basics." Last updated: June 2, 2023. https://www.epa.gov/ground-level-ozone-pollution/ground-level-ozone-basics (accessed March 2024).

_____. 2023c. Basic Information about Carbon Monoxide (CO) Outdoor Air Pollution. Last updated: July 13, 2023. https://www.epa.gov/co-pollution/basic-information-about-carbon-monoxide-co-outdoor-air-pollution (accessed March 2024).

_____.2023d. Nitrogen Dioxide (NO_2) Pollution. Last updated: July 25, 2023. https://www.epa.gov/no2-pollution/basic-information-about-no2 (accessed March 2024).

_____.2023e. Particulate Matter (PM) Pollution. Last updated: July 11, 2023. https://www.epa.gov/pm-pollution/particulate-matter-pm-basics (accessed March 2024).

_____. 2023f. Lead Air Pollution. Last updated: July 5, 2023. https://www.epa.gov/lead-air-pollution/basic-information-about-lead-air-pollution. (accessed March 2024).

_____. 2023g. "Inventory of U.S. Greenhouse Gas Emissions and Sinks – 1990-2021." April 13, 2023. https://www.epa.gov/system/files/documents/2023-04/US-GHG-Inventory-2023-Main-Text.pdf (accessed July 2023).

_____. 2024a. Sulfur Dioxide (SO_2) Pollution. Last updated: January 31, 2024. https://www.epa.gov/so2-pollution/sulfur-dioxide-basics (accessed March 2024).

_____. 2024b. Outdoor Air Quality Data – Monitor Values Report. https://www.epa.gov/outdoor-air-quality-data/monitor-values-report (accessed March 2024).

Appendix A

California Emissions Estimator Model Output Files

Reservoir Cover and Liner

Garvey - Cover and Liner Detailed Report

Table of Contents

1. Basic Project Information

1.1. Basic Project Information

1.2. Land Use Types

1.3. User-Selected Emission Reduction Measures by Emissions Sector

2. Emissions Summary

2.1. Construction Emissions Compared Against Thresholds

2.2. Construction Emissions by Year, Unmitigated

2.3. Construction Emissions by Year, Mitigated

3. Construction Emissions Details

3.1. Demolition (2025) - Unmitigated

3.2. Demolition (2025) - Mitigated

3.3. Demolition (2026) - Unmitigated

3.4. Demolition (2026) - Mitigated

3.5. Infrastructure Installation (2026) - Unmitigated

3.6. Infrastructure Installation (2026) - Mitigated

3.7. Infrastructure Installation (2027) - Unmitigated

3.8. Infrastructure Installation (2027) - Mitigated

5. Activity Data

5.1. Construction Schedule

5.2. Off-Road Equipment

5.2.1. Unmitigated

5.2.2. Mitigated

5.3. Construction Vehicles

5.3.1. Unmitigated

5.3.2. Mitigated

5.4. Vehicles

5.4.1. Construction Vehicle Control Strategies

5.5. Architectural Coatings

5.6. Dust Mitigation

5.6.1. Construction Earthmoving Activities

5.6.2. Construction Earthmoving Control Strategies

5.7. Construction Paving

5.8. Construction Electricity Consumption and Emissions Factors

8. User Changes to Default Data

1. Basic Project Information

1.1. Basic Project Information

Data Field	Value
Project Name	Garvey - Cover and Liner
Construction Start Date	9/30/2025
Lead Agency	—
Land Use Scale	Project/site
Analysis Level for Defaults	County
Windspeed (m/s)	0.50
Precipitation (days)	18.2
Location	1061 S Orange Ave, Monterey Park, CA 91755, USA
County	Los Angeles-South Coast
City	Monterey Park
Air District	South Coast AQMD
Air Basin	South Coast
TAZ	4170
EDFZ	7
Electric Utility	Southern California Edison
Gas Utility	Southern California Gas
App Version	2022.1.1.21

1.2. Land Use Types

Land Use Subtype	Size	Unit	Lot Acreage	Building Area (sq ft)	Landscape Area (sq ft)	Special Landscape Area (sq ft)	Population	Description
Other Non-Asphalt Surfaces	43.9	Acre	43.9	0.00	0.00	0.00	—	—

1.3. User-Selected Emission Reduction Measures by Emissions Sector

Sector	#	Measure Title
Construction	C-1-A	Use Electric or Hybrid Powered Equipment
Construction	C-5	Use Advanced Engine Tiers

2. Emissions Summary

2.1. Construction Emissions Compared Against Thresholds

Criteria Pollutants (lb/day for daily, ton/yr for annual) and GHGs (lb/day for daily, MT/yr for annual)

Un/Mit.	TOG	ROG	NOx	CO	SO2	PM10E	PM10D	PM10T	PM2.5E	PM2.5D	PM2.5T	BCO2	NBCO2	CO2T	CH4	N2O	R	CO2e
Daily, Summer (Max)	—	—	—	—	—	—	—	—	—	—	—	—	—	—	—	—	—	—
Unmit.	1.35	1.05	10.9	13.5	0.04	0.33	11.4	11.7	0.30	1.78	2.07	—	5,085	5,085	0.23	0.49	7.97	5,246
Mit.	0.40	0.26	4.15	11.9	0.03	0.06	11.4	11.4	0.06	1.78	1.81	—	4,604	4,604	0.21	0.49	7.97	4,763
% Reduced	70%	75%	62%	12%	18%	81%	—	2%	79%	—	13%	—	9%	9%	9%	1%	—	9%
Daily, Winter (Max)	—	—	—	—	—	—	—	—	—	—	—	—	—	—	—	—	—	—
Unmit.	1.35	1.05	11.0	13.2	0.04	0.33	11.4	11.7	0.30	1.78	2.07	—	5,065	5,065	0.23	0.49	0.21	5,219
Mit.	0.40	0.26	4.28	11.6	0.03	0.06	11.4	11.4	0.06	1.78	1.81	—	4,584	4,584	0.21	0.49	0.21	4,736
% Reduced	70%	76%	61%	12%	18%	81%	—	2%	79%	—	13%	—	10%	10%	9%	1%	—	9%
Average Daily (Max)	—	—	—	—	—	—	—	—	—	—	—	—	—	—	—	—	—	—
Unmit.	0.80	0.60	6.56	8.00	0.02	0.19	2.07	2.13	0.18	0.32	0.47	—	3,046	3,046	0.12	0.30	1.94	3,141
Mit.	0.24	0.15	2.57	7.04	0.02	0.04	2.07	2.08	0.04	0.32	0.34	—	2,753	2,753	0.11	0.30	1.94	2,846

% Reduced	70%	75%	61%	12%	18%	80%	—	2%	78%	—	28%	—	10%	10%	10%	1%	—	9%
Annual (Max)	—	—	—	—	—	—	—	—	—	—	—	—	—	—	—	—	—	—
Unmit.	0.15	0.11	1.20	1.46	< 0.005	0.03	0.38	0.39	0.03	0.06	0.09	—	504	504	0.02	0.05	0.32	520
Mit.	0.04	0.03	0.47	1.28	< 0.005	0.01	0.38	0.38	0.01	0.06	0.06	—	456	456	0.02	0.05	0.32	471
% Reduced	70%	75%	61%	12%	18%	80%	—	2%	78%	—	28%	—	10%	10%	10%	1%	—	9%

2.2. Construction Emissions by Year, Unmitigated

Criteria Pollutants (lb/day for daily, ton/yr for annual) and GHGs (lb/day for daily, MT/yr for annual)

Year	TOG	ROG	NOx	CO	SO2	PM10E	PM10D	PM10T	PM2.5E	PM2.5D	PM2.5T	BCO2	NBCO2	CO2T	CH4	N2O	R	CO2e
Daily - Summer (Max)	—	—	—	—	—	—	—	—	—	—	—	—	—	—	—	—	—	—
2025	1.29	1.05	9.03	13.0	0.02	0.32	11.4	11.7	0.29	1.78	2.07	—	2,859	2,859	0.13	0.14	3.00	2,905
2026	1.35	1.02	10.9	13.5	0.04	0.33	1.18	1.50	0.30	0.31	0.61	—	5,085	5,085	0.23	0.49	7.97	5,246
2027	1.32	0.99	10.6	13.3	0.04	0.31	1.18	1.49	0.29	0.31	0.60	—	5,019	5,019	0.21	0.49	7.38	5,179
Daily - Winter (Max)	—	—	—	—	—	—	—	—	—	—	—	—	—	—	—	—	—	—
2025	1.29	1.05	9.08	12.7	0.02	0.32	11.4	11.7	0.29	1.78	2.07	—	2,839	2,839	0.13	0.14	0.08	2,883
2026	1.35	1.02	11.0	13.2	0.04	0.33	11.4	11.7	0.30	1.78	2.05	—	5,065	5,065	0.23	0.49	0.21	5,219
2027	1.32	0.99	10.7	13.1	0.04	0.31	1.18	1.49	0.29	0.31	0.60	—	5,000	5,000	0.20	0.49	0.19	5,153
Average Daily	—	—	—	—	—	—	—	—	—	—	—	—	—	—	—	—	—	—
2025	0.23	0.19	1.66	2.32	< 0.005	0.06	2.07	2.13	0.05	0.32	0.38	—	518	518	0.02	0.02	0.24	526
2026	0.74	0.57	5.98	7.36	0.02	0.18	1.59	1.77	0.17	0.31	0.47	—	2,621	2,621	0.12	0.24	1.71	2,698
2027	0.80	0.60	6.56	8.00	0.02	0.19	0.71	0.90	0.18	0.19	0.36	—	3,046	3,046	0.12	0.30	1.94	3,141
Annual	—	—	—	—	—	—	—	—	—	—	—	—	—	—	—	—	—	—

2025	0.04	0.03	0.30	0.42	< 0.005	0.01	0.38	0.39	0.01	0.06	0.07	—	85.7	85.7	< 0.005	< 0.005	0.04	87.1
2026	0.14	0.10	1.09	1.34	< 0.005	0.03	0.29	0.32	0.03	0.06	0.09	—	434	434	0.02	0.04	0.28	447
2027	0.15	0.11	1.20	1.46	< 0.005	0.03	0.13	0.16	0.03	0.03	0.07	—	504	504	0.02	0.05	0.32	520

2.3. Construction Emissions by Year, Mitigated

Criteria Pollutants (lb/day for daily, ton/yr for annual) and GHGs (lb/day for daily, MT/yr for annual)

Year	TOG	ROG	NOx	CO	SO2	PM10E	PM10D	PM10T	PM2.5E	PM2.5D	PM2.5T	BCO2	NBCO2	CO2T	CH4	N2O	R	CO2e
Daily - Summer (Max)	—	—	—	—	—	—	—	—	—	—	—	—	—	—	—	—	—	—
2025	0.31	0.26	1.97	11.4	0.02	0.03	11.4	11.4	0.03	1.78	1.81	—	2,378	2,378	0.11	0.13	3.00	2,423
2026	0.40	0.25	4.15	11.9	0.03	0.06	1.18	1.24	0.06	0.31	0.37	—	4,604	4,604	0.21	0.49	7.97	4,763
2027	0.40	0.25	4.02	11.7	0.03	0.06	1.18	1.24	0.06	0.31	0.37	—	4,537	4,537	0.19	0.49	7.38	4,695
Daily - Winter (Max)	—	—	—	—	—	—	—	—	—	—	—	—	—	—	—	—	—	—
2025	0.31	0.26	2.02	11.1	0.02	0.03	11.4	11.4	0.03	1.78	1.81	—	2,359	2,359	0.11	0.13	0.08	2,401
2026	0.40	0.25	4.28	11.6	0.03	0.06	11.4	11.4	0.06	1.78	1.81	—	4,584	4,584	0.21	0.49	0.21	4,736
2027	0.40	0.25	4.17	11.5	0.03	0.06	1.18	1.24	0.06	0.31	0.37	—	4,518	4,518	0.18	0.49	0.19	4,669
Average Daily	—	—	—	—	—	—	—	—	—	—	—	—	—	—	—	—	—	—
2025	0.06	0.05	0.37	2.03	< 0.005	0.01	2.07	2.08	0.01	0.32	0.33	—	430	430	0.02	0.02	0.24	438
2026	0.21	0.14	2.21	6.47	0.02	0.03	1.59	1.62	0.03	0.31	0.34	—	2,353	2,353	0.11	0.24	1.71	2,429
2027	0.24	0.15	2.57	7.04	0.02	0.04	0.71	0.75	0.04	0.19	0.22	—	2,753	2,753	0.11	0.30	1.94	2,846
Annual	—	—	—	—	—	—	—	—	—	—	—	—	—	—	—	—	—	—
2025	0.01	0.01	0.07	0.37	< 0.005	< 0.005	0.38	0.38	< 0.005	0.06	0.06	—	71.2	71.2	< 0.005	< 0.005	0.04	72.5
2026	0.04	0.03	0.40	1.18	< 0.005	0.01	0.29	0.30	0.01	0.06	0.06	—	390	390	0.02	0.04	0.28	402
2027	0.04	0.03	0.47	1.28	< 0.005	0.01	0.13	0.14	0.01	0.03	0.04	—	456	456	0.02	0.05	0.32	471

3. Construction Emissions Details

3.1. Demolition (2025) - Unmitigated

Criteria Pollutants (lb/day for daily, ton/yr for annual) and GHGs (lb/day for daily, MT/yr for annual)

Location	TOG	ROG	NOx	CO	SO2	PM10E	PM10D	PM10T	PM2.5E	PM2.5D	PM2.5T	BCO2	NBCO2	CO2T	CH4	N2O	R	CO2e
Onsite	—	—	—	—	—	—	—	—	—	—	—	—	—	—	—	—	—	—
Daily, Summer (Max)	—	—	—	—	—	—	—	—	—	—	—	—	—	—	—	—	—	—
Off-Road Equipment	1.10	0.92	8.06	10.7	0.02	0.31	—	0.31	0.28	—	0.28	—	1,786	1,786	0.07	0.01	—	1,792
Dust From Material Movement	—	—	—	—	—	—	< 0.005	< 0.005	—	< 0.005	< 0.005	—	—	—	—	—	—	—
Demolition	—	—	—	—	—	—	10.8	10.8	—	1.64	1.64	—	—	—	—	—	—	—
Onsite truck	0.00	0.00	0.00	0.00	0.00	0.00	0.00	0.00	0.00	0.00	0.00	—	0.00	0.00	0.00	0.00	0.00	0.00
Daily, Winter (Max)	—	—	—	—	—	—	—	—	—	—	—	—	—	—	—	—	—	—
Off-Road Equipment	1.10	0.92	8.06	10.7	0.02	0.31	—	0.31	0.28	—	0.28	—	1,786	1,786	0.07	0.01	—	1,792
Dust From Material Movement	—	—	—	—	—	—	< 0.005	< 0.005	—	< 0.005	< 0.005	—	—	—	—	—	—	—
Demolition	—	—	—	—	—	—	10.8	10.8	—	1.64	1.64	—	—	—	—	—	—	—
Onsite truck	0.00	0.00	0.00	0.00	0.00	0.00	0.00	0.00	0.00	0.00	0.00	—	0.00	0.00	0.00	0.00	0.00	0.00

Average Daily	—	—	—	—	—	—	—	—	—	—	—	—	—	—	—	—	—	—
Off-Road Equipment	0.20	0.17	1.47	1.95	< 0.005	0.06	—	0.06	0.05	—	0.05	—	325	325	0.01	< 0.005	—	326
Dust From Material Movement	—	—	—	—	—	—	< 0.005	< 0.005	—	< 0.005	< 0.005	—	—	—	—	—	—	—
Demolition	—	—	—	—	—	—	1.97	1.97	—	0.30	0.30	—	—	—	—	—	—	—
Onsite truck	0.00	0.00	0.00	0.00	0.00	0.00	0.00	0.00	0.00	0.00	0.00	—	0.00	0.00	0.00	0.00	0.00	0.00
Annual	—	—	—	—	—	—	—	—	—	—	—	—	—	—	—	—	—	—
Off-Road Equipment	0.04	0.03	0.27	0.36	< 0.005	0.01	—	0.01	0.01	—	0.01	—	53.8	53.8	< 0.005	< 0.005	—	54.0
Dust From Material Movement	—	—	—	—	—	—	< 0.005	< 0.005	—	< 0.005	< 0.005	—	—	—	—	—	—	—
Demolition	—	—	—	—	—	—	0.36	0.36	—	0.05	0.05	—	—	—	—	—	—	—
Onsite truck	0.00	0.00	0.00	0.00	0.00	0.00	0.00	0.00	0.00	0.00	0.00	—	0.00	0.00	0.00	0.00	0.00	0.00
Offsite	—	—	—	—	—	—	—	—	—	—	—	—	—	—	—	—	—	—
Daily, Summer (Max)	—	—	—	—	—	—	—	—	—	—	—	—	—	—	—	—	—	—
Worker	0.13	0.12	0.12	1.91	0.00	0.00	0.36	0.36	0.00	0.08	0.08	—	380	380	0.02	0.01	1.39	386
Vendor	0.00	0.00	0.00	0.00	0.00	0.00	0.00	0.00	0.00	0.00	0.00	—	0.00	0.00	0.00	0.00	0.00	0.00
Hauling	0.05	0.01	0.85	0.33	< 0.005	0.01	0.19	0.19	0.01	0.05	0.06	—	693	693	0.04	0.11	1.61	728
Daily, Winter (Max)	—	—	—	—	—	—	—	—	—	—	—	—	—	—	—	—	—	—
Worker	0.13	0.12	0.13	1.62	0.00	0.00	0.36	0.36	0.00	0.08	0.08	—	360	360	0.02	0.01	0.04	365

Vendor	0.00	0.00	0.00	0.00	0.00	0.00	0.00	0.00	0.00	0.00	0.00	—	0.00	0.00	0.00	0.00	0.00	0.00
Hauling	0.05	0.01	0.88	0.33	< 0.005	0.01	0.19	0.19	0.01	0.05	0.06	—	693	693	0.04	0.11	0.04	726
Average Daily	—	—	—	—	—	—	—	—	—	—	—	—	—	—	—	—	—	—
Worker	0.02	0.02	0.03	0.31	0.00	0.00	0.06	0.06	0.00	0.02	0.02	—	66.6	66.6	< 0.005	< 0.005	0.11	67.5
Vendor	0.00	0.00	0.00	0.00	0.00	0.00	0.00	0.00	0.00	0.00	0.00	—	0.00	0.00	0.00	0.00	0.00	0.00
Hauling	0.01	< 0.005	0.16	0.06	< 0.005	< 0.005	0.03	0.04	< 0.005	0.01	0.01	—	126	126	0.01	0.02	0.13	132
Annual	—	—	—	—	—	—	—	—	—	—	—	—	—	—	—	—	—	—
Worker	< 0.005	< 0.005	< 0.005	0.06	0.00	0.00	0.01	0.01	0.00	< 0.005	< 0.005	—	11.0	11.0	< 0.005	< 0.005	0.02	11.2
Vendor	0.00	0.00	0.00	0.00	0.00	0.00	0.00	0.00	0.00	0.00	0.00	—	0.00	0.00	0.00	0.00	0.00	0.00
Hauling	< 0.005	< 0.005	0.03	0.01	< 0.005	< 0.005	0.01	0.01	< 0.005	< 0.005	< 0.005	—	20.9	20.9	< 0.005	< 0.005	0.02	21.9

3.2. Demolition (2025) - Mitigated

Criteria Pollutants (lb/day for daily, ton/yr for annual) and GHGs (lb/day for daily, MT/yr for annual)

Location	TOG	ROG	NOx	CO	SO2	PM10E	PM10D	PM10T	PM2.5E	PM2.5D	PM2.5T	BCO2	NBCO2	CO2T	CH4	N2O	R	CO2e
Onsite	—	—	—	—	—	—	—	—	—	—	—	—	—	—	—	—	—	—
Daily, Summer (Max)	—	—	—	—	—	—	—	—	—	—	—	—	—	—	—	—	—	—
Off-Road Equipment	0.13	0.13	1.00	9.13	0.01	0.02	—	0.02	0.02	—	0.02	—	1,303	1,303	0.05	0.01	—	1,307
Dust From Material Movement	—	—	—	—	—	—	< 0.005	< 0.005	—	< 0.005	< 0.005	—	—	—	—	—	—	—
Demolition	—	—	—	—	—	—	10.8	10.8	—	1.64	1.64	—	—	—	—	—	—	—
Onsite truck	0.00	0.00	0.00	0.00	0.00	0.00	0.00	0.00	0.00	0.00	0.00	—	0.00	0.00	0.00	0.00	0.00	0.00

Daily, Winter (Max)	—	—	—	—	—	—	—	—	—	—	—	—	—	—	—	—	—	—
Off-Road Equipment	0.13	0.13	1.00	9.13	0.01	0.02	—	0.02	0.02	—	0.02	—	1,303	1,303	0.05	0.01	—	1,307
Dust From Material Movement	—	—	—	—	—	—	< 0.005	< 0.005	—	< 0.005	< 0.005	—	—	—	—	—	—	—
Demolition	—	—	—	—	—	—	10.8	10.8	—	1.64	1.64	—	—	—	—	—	—	—
Onsite truck	0.00	0.00	0.00	0.00	0.00	0.00	0.00	0.00	0.00	0.00	0.00	—	0.00	0.00	0.00	0.00	0.00	0.00
Average Daily	—	—	—	—	—	—	—	—	—	—	—	—	—	—	—	—	—	—
Off-Road Equipment	0.02	0.02	0.18	1.66	< 0.005	< 0.005	—	< 0.005	< 0.005	—	< 0.005	—	237	237	0.01	< 0.005	—	238
Dust From Material Movement	—	—	—	—	—	—	< 0.005	< 0.005	—	< 0.005	< 0.005	—	—	—	—	—	—	—
Demolition	—	—	—	—	—	—	1.97	1.97	—	0.30	0.30	—	—	—	—	—	—	—
Onsite truck	0.00	0.00	0.00	0.00	0.00	0.00	0.00	0.00	0.00	0.00	0.00	—	0.00	0.00	0.00	0.00	0.00	0.00
Annual	—	—	—	—	—	—	—	—	—	—	—	—	—	—	—	—	—	—
Off-Road Equipment	< 0.005	< 0.005	0.03	0.30	< 0.005	< 0.005	—	< 0.005	< 0.005	—	< 0.005	—	39.3	39.3	< 0.005	< 0.005	—	39.4
Dust From Material Movement	—	—	—	—	—	—	< 0.005	< 0.005	—	< 0.005	< 0.005	—	—	—	—	—	—	—
Demolition	—	—	—	—	—	—	0.36	0.36	—	0.05	0.05	—	—	—	—	—	—	—

Onsite truck	0.00	0.00	0.00	0.00	0.00	0.00	0.00	0.00	0.00	0.00	0.00	—	0.00	0.00	0.00	0.00	0.00	0.00
Offsite	—	—	—	—	—	—	—	—	—	—	—	—	—	—	—	—	—	—
Daily, Summer (Max)	—	—	—	—	—	—	—	—	—	—	—	—	—	—	—	—	—	—
Worker	0.13	0.12	0.12	1.91	0.00	0.00	0.36	0.36	0.00	0.08	0.08	—	380	380	0.02	0.01	1.39	386
Vendor	0.00	0.00	0.00	0.00	0.00	0.00	0.00	0.00	0.00	0.00	0.00	—	0.00	0.00	0.00	0.00	0.00	0.00
Hauling	0.05	0.01	0.85	0.33	< 0.005	0.01	0.19	0.19	0.01	0.05	0.06	—	693	693	0.04	0.11	1.61	728
Daily, Winter (Max)	—	—	—	—	—	—	—	—	—	—	—	—	—	—	—	—	—	—
Worker	0.13	0.12	0.13	1.62	0.00	0.00	0.36	0.36	0.00	0.08	0.08	—	360	360	0.02	0.01	0.04	365
Vendor	0.00	0.00	0.00	0.00	0.00	0.00	0.00	0.00	0.00	0.00	0.00	—	0.00	0.00	0.00	0.00	0.00	0.00
Hauling	0.05	0.01	0.88	0.33	< 0.005	0.01	0.19	0.19	0.01	0.05	0.06	—	693	693	0.04	0.11	0.04	726
Average Daily	—	—	—	—	—	—	—	—	—	—	—	—	—	—	—	—	—	—
Worker	0.02	0.02	0.03	0.31	0.00	0.00	0.06	0.06	0.00	0.02	0.02	—	66.6	66.6	< 0.005	< 0.005	0.11	67.5
Vendor	0.00	0.00	0.00	0.00	0.00	0.00	0.00	0.00	0.00	0.00	0.00	—	0.00	0.00	0.00	0.00	0.00	0.00
Hauling	0.01	< 0.005	0.16	0.06	< 0.005	< 0.005	0.03	0.04	< 0.005	0.01	0.01	—	126	126	0.01	0.02	0.13	132
Annual	—	—	—	—	—	—	—	—	—	—	—	—	—	—	—	—	—	—
Worker	< 0.005	< 0.005	< 0.005	0.06	0.00	0.00	0.01	0.01	0.00	< 0.005	< 0.005	—	11.0	11.0	< 0.005	< 0.005	0.02	11.2
Vendor	0.00	0.00	0.00	0.00	0.00	0.00	0.00	0.00	0.00	0.00	0.00	—	0.00	0.00	0.00	0.00	0.00	0.00
Hauling	< 0.005	< 0.005	0.03	0.01	< 0.005	< 0.005	0.01	0.01	< 0.005	< 0.005	< 0.005	—	20.9	20.9	< 0.005	< 0.005	0.02	21.9

3.3. Demolition (2026) - Unmitigated

Criteria Pollutants (lb/day for daily, ton/yr for annual) and GHGs (lb/day for daily, MT/yr for annual)

Location	TOG	ROG	NOx	CO	SO2	PM10E	PM10D	PM10T	PM2.5E	PM2.5D	PM2.5T	BCO2	NBCO2	CO2T	CH4	N2O	R	CO2e
Onsite	—	—	—	—	—	—	—	—	—	—	—	—	—	—	—	—	—	—

Daily, Summer (Max)	—	—	—	—	—	—	—	—	—	—	—	—	—	—	—	—	—	—
Daily, Winter (Max)	—	—	—	—	—	—	—	—	—	—	—	—	—	—	—	—	—	—
Off-Road Equipment	1.07	0.89	7.76	10.7	0.02	0.29	—	0.29	0.26	—	0.26	—	1,786	1,786	0.07	0.01	—	1,792
Dust From Material Movement	—	—	—	—	—	—	< 0.005	< 0.005	—	< 0.005	< 0.005	—	—	—	—	—	—	—
Demolition	—	—	—	—	—	—	10.8	10.8	—	1.64	1.64	—	—	—	—	—	—	—
Onsite truck	0.00	0.00	0.00	0.00	0.00	0.00	0.00	0.00	0.00	0.00	0.00	—	0.00	0.00	0.00	0.00	0.00	0.00
Average Daily	—	—	—	—	—	—	—	—	—	—	—	—	—	—	—	—	—	—
Off-Road Equipment	0.10	0.08	0.71	0.99	< 0.005	0.03	—	0.03	0.02	—	0.02	—	164	164	0.01	< 0.005	—	165
Dust From Material Movement	—	—	—	—	—	—	< 0.005	< 0.005	—	< 0.005	< 0.005	—	—	—	—	—	—	—
Demolition	—	—	—	—	—	—	1.00	1.00	—	0.15	0.15	—	—	—	—	—	—	—
Onsite truck	0.00	0.00	0.00	0.00	0.00	0.00	0.00	0.00	0.00	0.00	0.00	—	0.00	0.00	0.00	0.00	0.00	0.00
Annual	—	—	—	—	—	—	—	—	—	—	—	—	—	—	—	—	—	—
Off-Road Equipment	0.02	0.02	0.13	0.18	< 0.005	< 0.005	—	< 0.005	< 0.005	—	< 0.005	—	27.2	27.2	< 0.005	< 0.005	—	27.3
Dust From Material Movement	—	—	—	—	—	—	< 0.005	< 0.005	—	< 0.005	< 0.005	—	—	—	—	—	—	—

Demolitio	—	—	—	—	—	—	0.18	0.18	—	0.03	0.03	—	—	—	—	—	—	—
Onsite truck	0.00	0.00	0.00	0.00	0.00	0.00	0.00	0.00	0.00	0.00	0.00	—	0.00	0.00	0.00	0.00	0.00	0.00
Offsite	—	—	—	—	—	—	—	—	—	—	—	—	—	—	—	—	—	—
Daily, Summer (Max)	—	—	—	—	—	—	—	—	—	—	—	—	—	—	—	—	—	—
Daily, Winter (Max)	—	—	—	—	—	—	—	—	—	—	—	—	—	—	—	—	—	—
Worker	0.11	0.10	0.12	1.52	0.00	0.00	0.36	0.36	0.00	0.08	0.08	—	353	353	0.02	0.01	0.03	358
Vendor	0.00	0.00	0.00	0.00	0.00	0.00	0.00	0.00	0.00	0.00	0.00	—	0.00	0.00	0.00	0.00	0.00	0.00
Hauling	0.05	0.01	0.85	0.33	< 0.005	0.01	0.19	0.19	0.01	0.05	0.06	—	680	680	0.04	0.11	0.04	714
Average Daily	—	—	—	—	—	—	—	—	—	—	—	—	—	—	—	—	—	—
Worker	0.01	0.01	0.01	0.15	0.00	0.00	0.03	0.03	0.00	0.01	0.01	—	33.0	33.0	< 0.005	< 0.005	0.05	33.4
Vendor	0.00	0.00	0.00	0.00	0.00	0.00	0.00	0.00	0.00	0.00	0.00	—	0.00	0.00	0.00	0.00	0.00	0.00
Hauling	< 0.005	< 0.005	0.08	0.03	< 0.005	< 0.005	0.02	0.02	< 0.005	< 0.005	0.01	—	62.6	62.6	< 0.005	0.01	0.06	65.7
Annual	—	—	—	—	—	—	—	—	—	—	—	—	—	—	—	—	—	—
Worker	< 0.005	< 0.005	< 0.005	0.03	0.00	0.00	0.01	0.01	0.00	< 0.005	< 0.005	—	5.46	5.46	< 0.005	< 0.005	0.01	5.53
Vendor	0.00	0.00	0.00	0.00	0.00	0.00	0.00	0.00	0.00	0.00	0.00	—	0.00	0.00	0.00	0.00	0.00	0.00
Hauling	< 0.005	< 0.005	0.01	0.01	< 0.005	< 0.005	< 0.005	< 0.005	< 0.005	< 0.005	< 0.005	—	10.4	10.4	< 0.005	< 0.005	0.01	10.9

3.4. Demolition (2026) - Mitigated

Criteria Pollutants (lb/day for daily, ton/yr for annual) and GHGs (lb/day for daily, MT/yr for annual)

Location	TOG	ROG	NOx	CO	SO2	PM10E	PM10D	PM10T	PM2.5E	PM2.5D	PM2.5T	BCO2	NBCO2	CO2T	CH4	N2O	R	CO2e
Onsite	—	—	—	—	—	—	—	—	—	—	—	—	—	—	—	—	—	—
Daily, Summer (Max)	—	—	—	—	—	—	—	—	—	—	—	—	—	—	—	—	—	—

Daily, Winter (Max)	—	—	—	—	—	—	—	—	—	—	—	—	—	—	—	—	—	—
Off-Road Equipment	0.13	0.13	1.00	9.13	0.01	0.02	—	0.02	0.02	—	0.02	—	1,303	1,303	0.05	0.01	—	1,308
Dust From Material Movement	—	—	—	—	—	—	< 0.005	< 0.005	—	< 0.005	< 0.005	—	—	—	—	—	—	—
Demolition	—	—	—	—	—	—	10.8	10.8	—	1.64	1.64	—	—	—	—	—	—	—
Onsite truck	0.00	0.00	0.00	0.00	0.00	0.00	0.00	0.00	0.00	0.00	0.00	—	0.00	0.00	0.00	0.00	0.00	0.00
Average Daily	—	—	—	—	—	—	—	—	—	—	—	—	—	—	—	—	—	—
Off-Road Equipment	0.01	0.01	0.09	0.84	< 0.005	< 0.005	—	< 0.005	< 0.005	—	< 0.005	—	120	120	< 0.005	< 0.005	—	120
Dust From Material Movement	—	—	—	—	—	—	< 0.005	< 0.005	—	< 0.005	< 0.005	—	—	—	—	—	—	—
Demolition	—	—	—	—	—	—	1.00	1.00	—	0.15	0.15	—	—	—	—	—	—	—
Onsite truck	0.00	0.00	0.00	0.00	0.00	0.00	0.00	0.00	0.00	0.00	0.00	—	0.00	0.00	0.00	0.00	0.00	0.00
Annual	—	—	—	—	—	—	—	—	—	—	—	—	—	—	—	—	—	—
Off-Road Equipment	< 0.005	< 0.005	0.02	0.15	< 0.005	< 0.005	—	< 0.005	< 0.005	—	< 0.005	—	19.8	19.8	< 0.005	< 0.005	—	19.9
Dust From Material Movement	—	—	—	—	—	—	< 0.005	< 0.005	—	< 0.005	< 0.005	—	—	—	—	—	—	—
Demolition	—	—	—	—	—	—	0.18	0.18	—	0.03	0.03	—	—	—	—	—	—	—

Onsite truck	0.00	0.00	0.00	0.00	0.00	0.00	0.00	0.00	0.00	0.00	0.00	—	0.00	0.00	0.00	0.00	0.00	0.00
Offsite	—	—	—	—	—	—	—	—	—	—	—	—	—	—	—	—	—	—
Daily, Summer (Max)	—	—	—	—	—	—	—	—	—	—	—	—	—	—	—	—	—	—
Daily, Winter (Max)	—	—	—	—	—	—	—	—	—	—	—	—	—	—	—	—	—	—
Worker	0.11	0.10	0.12	1.52	0.00	0.00	0.36	0.36	0.00	0.08	0.08	—	353	353	0.02	0.01	0.03	358
Vendor	0.00	0.00	0.00	0.00	0.00	0.00	0.00	0.00	0.00	0.00	0.00	—	0.00	0.00	0.00	0.00	0.00	0.00
Hauling	0.05	0.01	0.85	0.33	< 0.005	0.01	0.19	0.19	0.01	0.05	0.06	—	680	680	0.04	0.11	0.04	714
Average Daily	—	—	—	—	—	—	—	—	—	—	—	—	—	—	—	—	—	—
Worker	0.01	0.01	0.01	0.15	0.00	0.00	0.03	0.03	0.00	0.01	0.01	—	33.0	33.0	< 0.005	< 0.005	0.05	33.4
Vendor	0.00	0.00	0.00	0.00	0.00	0.00	0.00	0.00	0.00	0.00	0.00	—	0.00	0.00	0.00	0.00	0.00	0.00
Hauling	< 0.005	< 0.005	0.08	0.03	< 0.005	< 0.005	0.02	0.02	< 0.005	< 0.005	0.01	—	62.6	62.6	< 0.005	0.01	0.06	65.7
Annual	—	—	—	—	—	—	—	—	—	—	—	—	—	—	—	—	—	—
Worker	< 0.005	< 0.005	< 0.005	0.03	0.00	0.00	0.01	0.01	0.00	< 0.005	< 0.005	—	5.46	5.46	< 0.005	< 0.005	0.01	5.53
Vendor	0.00	0.00	0.00	0.00	0.00	0.00	0.00	0.00	0.00	0.00	0.00	—	0.00	0.00	0.00	0.00	0.00	0.00
Hauling	< 0.005	< 0.005	0.01	0.01	< 0.005	< 0.005	< 0.005	< 0.005	< 0.005	< 0.005	< 0.005	—	10.4	10.4	< 0.005	< 0.005	0.01	10.9

3.5. Infrastrcture Installation (2026) - Unmitigated

Criteria Pollutants (lb/day for daily, ton/yr for annual) and GHGs (lb/day for daily, MT/yr for annual)

Location	TOG	ROG	NOx	CO	SO2	PM10E	PM10D	PM10T	PM2.5E	PM2.5D	PM2.5T	BCO2	NBCO2	CO2T	CH4	N2O	R	CO2e
Onsite	—	—	—	—	—	—	—	—	—	—	—	—	—	—	—	—	—	—
Daily, Summer (Max)	—	—	—	—	—	—	—	—	—	—	—	—	—	—	—	—	—	—

Off-Road Equipment	1.07	0.89	7.76	10.7	0.02	0.29	—	0.29	0.26	—	0.26	—	1,786	1,786	0.07	0.01	—	1,792
Onsite truck	0.00	0.00	0.00	0.00	0.00	0.00	0.00	0.00	0.00	0.00	0.00	—	0.00	0.00	0.00	0.00	0.00	0.00
Daily, Winter (Max)	—	—	—	—	—	—	—	—	—	—	—	—	—	—	—	—	—	—
Off-Road Equipment	1.07	0.89	7.76	10.7	0.02	0.29	—	0.29	0.26	—	0.26	—	1,786	1,786	0.07	0.01	—	1,792
Onsite truck	0.00	0.00	0.00	0.00	0.00	0.00	0.00	0.00	0.00	0.00	0.00	—	0.00	0.00	0.00	0.00	0.00	0.00
Average Daily	—	—	—	—	—	—	—	—	—	—	—	—	—	—	—	—	—	—
Off-Road Equipment	0.50	0.42	3.62	4.99	0.01	0.13	—	0.13	0.12	—	0.12	—	832	832	0.03	0.01	—	835
Onsite truck	0.00	0.00	0.00	0.00	0.00	0.00	0.00	0.00	0.00	0.00	0.00	—	0.00	0.00	0.00	0.00	0.00	0.00
Annual	—	—	—	—	—	—	—	—	—	—	—	—	—	—	—	—	—	—
Off-Road Equipment	0.09	0.08	0.66	0.91	< 0.005	0.02	—	0.02	0.02	—	0.02	—	138	138	0.01	< 0.005	—	138
Onsite truck	0.00	0.00	0.00	0.00	0.00	0.00	0.00	0.00	0.00	0.00	0.00	—	0.00	0.00	0.00	0.00	0.00	0.00
Offsite	—	—	—	—	—	—	—	—	—	—	—	—	—	—	—	—	—	—
Daily, Summer (Max)	—	—	—	—	—	—	—	—	—	—	—	—	—	—	—	—	—	—
Worker	0.11	0.10	0.11	1.78	0.00	0.00	0.36	0.36	0.00	0.08	0.08	—	373	373	0.02	0.01	1.26	378
Vendor	0.00	0.00	0.00	0.00	0.00	0.00	0.00	0.00	0.00	0.00	0.00	—	0.00	0.00	0.00	0.00	0.00	0.00
Hauling	0.16	0.02	3.04	0.99	0.02	0.04	0.82	0.85	0.04	0.22	0.26	—	2,926	2,926	0.14	0.47	6.71	3,075
Daily, Winter (Max)	—	—	—	—	—	—	—	—	—	—	—	—	—	—	—	—	—	—
Worker	0.11	0.10	0.12	1.52	0.00	0.00	0.36	0.36	0.00	0.08	0.08	—	353	353	0.02	0.01	0.03	358

Vendor	0.00	0.00	0.00	0.00	0.00	0.00	0.00	0.00	0.00	0.00	0.00	—	0.00	0.00	0.00	0.00	0.00	0.00
Hauling	0.16	0.02	3.16	0.99	0.02	0.04	0.82	0.85	0.04	0.22	0.26	—	2,926	2,926	0.14	0.47	0.17	3,069
Average Daily	—	—	—	—	—	—	—	—	—	—	—	—	—	—	—	—	—	—
Worker	0.05	0.05	0.06	0.74	0.00	0.00	0.17	0.17	0.00	0.04	0.04	—	167	167	0.01	0.01	0.25	169
Vendor	0.00	0.00	0.00	0.00	0.00	0.00	0.00	0.00	0.00	0.00	0.00	—	0.00	0.00	0.00	0.00	0.00	0.00
Hauling	0.07	0.01	1.50	0.46	0.01	0.02	0.38	0.39	0.02	0.10	0.12	—	1,363	1,363	0.06	0.22	1.34	1,431
Annual	—	—	—	—	—	—	—	—	—	—	—	—	—	—	—	—	—	—
Worker	0.01	0.01	0.01	0.13	0.00	0.00	0.03	0.03	0.00	0.01	0.01	—	27.6	27.6	< 0.005	< 0.005	0.04	28.0
Vendor	0.00	0.00	0.00	0.00	0.00	0.00	0.00	0.00	0.00	0.00	0.00	—	0.00	0.00	0.00	0.00	0.00	0.00
Hauling	0.01	< 0.005	0.27	0.08	< 0.005	< 0.005	0.07	0.07	< 0.005	0.02	0.02	—	226	226	0.01	0.04	0.22	237

3.6. Infrastrcture Installation (2026) - Mitigated

Criteria Pollutants (lb/day for daily, ton/yr for annual) and GHGs (lb/day for daily, MT/yr for annual)

Location	TOG	ROG	NOx	CO	SO2	PM10E	PM10D	PM10T	PM2.5E	PM2.5D	PM2.5T	BCO2	NBCO2	CO2T	CH4	N2O	R	CO2e
Onsite	—	—	—	—	—	—	—	—	—	—	—	—	—	—	—	—	—	—
Daily, Summer (Max)	—	—	—	—	—	—	—	—	—	—	—	—	—	—	—	—	—	—
Off-Road Equipment	0.13	0.13	1.00	9.13	0.01	0.02	—	0.02	0.02	—	0.02	—	1,303	1,303	0.05	0.01	—	1,308
Onsite truck	0.00	0.00	0.00	0.00	0.00	0.00	0.00	0.00	0.00	0.00	0.00	—	0.00	0.00	0.00	0.00	0.00	0.00
Daily, Winter (Max)	—	—	—	—	—	—	—	—	—	—	—	—	—	—	—	—	—	—
Off-Road Equipment	0.13	0.13	1.00	9.13	0.01	0.02	—	0.02	0.02	—	0.02	—	1,303	1,303	0.05	0.01	—	1,308
Onsite truck	0.00	0.00	0.00	0.00	0.00	0.00	0.00	0.00	0.00	0.00	0.00	—	0.00	0.00	0.00	0.00	0.00	0.00

Average Daily	—	—	—	—	—	—	—	—	—	—	—	—	—	—	—	—	—	—
Off-Road Equipment	0.06	0.06	0.47	4.25	0.01	0.01	—	0.01	0.01	—	0.01	—	607	607	0.02	< 0.005	—	609
Onsite truck	0.00	0.00	0.00	0.00	0.00	0.00	0.00	0.00	0.00	0.00	0.00	—	0.00	0.00	0.00	0.00	0.00	0.00
Annual	—	—	—	—	—	—	—	—	—	—	—	—	—	—	—	—	—	—
Off-Road Equipment	0.01	0.01	0.09	0.78	< 0.005	< 0.005	—	< 0.005	< 0.005	—	< 0.005	—	101	101	< 0.005	< 0.005	—	101
Onsite truck	0.00	0.00	0.00	0.00	0.00	0.00	0.00	0.00	0.00	0.00	0.00	—	0.00	0.00	0.00	0.00	0.00	0.00
Offsite	—	—	—	—	—	—	—	—	—	—	—	—	—	—	—	—	—	—
Daily, Summer (Max)	—	—	—	—	—	—	—	—	—	—	—	—	—	—	—	—	—	—
Worker	0.11	0.10	0.11	1.78	0.00	0.00	0.36	0.36	0.00	0.08	0.08	—	373	373	0.02	0.01	1.26	378
Vendor	0.00	0.00	0.00	0.00	0.00	0.00	0.00	0.00	0.00	0.00	0.00	—	0.00	0.00	0.00	0.00	0.00	0.00
Hauling	0.16	0.02	3.04	0.99	0.02	0.04	0.82	0.85	0.04	0.22	0.26	—	2,926	2,926	0.14	0.47	6.71	3,075
Daily, Winter (Max)	—	—	—	—	—	—	—	—	—	—	—	—	—	—	—	—	—	—
Worker	0.11	0.10	0.12	1.52	0.00	0.00	0.36	0.36	0.00	0.08	0.08	—	353	353	0.02	0.01	0.03	358
Vendor	0.00	0.00	0.00	0.00	0.00	0.00	0.00	0.00	0.00	0.00	0.00	—	0.00	0.00	0.00	0.00	0.00	0.00
Hauling	0.16	0.02	3.16	0.99	0.02	0.04	0.82	0.85	0.04	0.22	0.26	—	2,926	2,926	0.14	0.47	0.17	3,069
Average Daily	—	—	—	—	—	—	—	—	—	—	—	—	—	—	—	—	—	—
Worker	0.05	0.05	0.06	0.74	0.00	0.00	0.17	0.17	0.00	0.04	0.04	—	167	167	0.01	0.01	0.25	169
Vendor	0.00	0.00	0.00	0.00	0.00	0.00	0.00	0.00	0.00	0.00	0.00	—	0.00	0.00	0.00	0.00	0.00	0.00
Hauling	0.07	0.01	1.50	0.46	0.01	0.02	0.38	0.39	0.02	0.10	0.12	—	1,363	1,363	0.06	0.22	1.34	1,431
Annual	—	—	—	—	—	—	—	—	—	—	—	—	—	—	—	—	—	—
Worker	0.01	0.01	0.01	0.13	0.00	0.00	0.03	0.03	0.00	0.01	0.01	—	27.6	27.6	< 0.005	< 0.005	0.04	28.0

Vendor	0.00	0.00	0.00	0.00	0.00	0.00	0.00	0.00	0.00	0.00	0.00	—	0.00	0.00	0.00	0.00	0.00	0.00
Hauling	0.01	< 0.005	0.27	0.08	< 0.005	< 0.005	0.07	0.07	< 0.005	0.02	0.02	—	226	226	0.01	0.04	0.22	237

3.7. Infrastrcture Installation (2027) - Unmitigated

Criteria Pollutants (lb/day for daily, ton/yr for annual) and GHGs (lb/day for daily, MT/yr for annual)

Location	TOG	ROG	NOx	CO	SO2	PM10E	PM10D	PM10T	PM2.5E	PM2.5D	PM2.5T	BCO2	NBCO2	CO2T	CH4	N2O	R	CO2e
Onsite	—	—	—	—	—	—	—	—	—	—	—	—	—	—	—	—	—	—
Daily, Summer (Max)	—	—	—	—	—	—	—	—	—	—	—	—	—	—	—	—	—	—
Off-Road Equipment	1.05	0.87	7.55	10.7	0.02	0.27	—	0.27	0.25	—	0.25	—	1,786	1,786	0.07	0.01	—	1,792
Onsite truck	0.00	0.00	0.00	0.00	0.00	0.00	0.00	0.00	0.00	0.00	0.00	—	0.00	0.00	0.00	0.00	0.00	0.00
Daily, Winter (Max)	—	—	—	—	—	—	—	—	—	—	—	—	—	—	—	—	—	—
Off-Road Equipment	1.05	0.87	7.55	10.7	0.02	0.27	—	0.27	0.25	—	0.25	—	1,786	1,786	0.07	0.01	—	1,792
Onsite truck	0.00	0.00	0.00	0.00	0.00	0.00	0.00	0.00	0.00	0.00	0.00	—	0.00	0.00	0.00	0.00	0.00	0.00
Average Daily	—	—	—	—	—	—	—	—	—	—	—	—	—	—	—	—	—	—
Off-Road Equipment	0.64	0.53	4.60	6.52	0.01	0.17	—	0.17	0.15	—	0.15	—	1,087	1,087	0.04	0.01	—	1,091
Onsite truck	0.00	0.00	0.00	0.00	0.00	0.00	0.00	0.00	0.00	0.00	0.00	—	0.00	0.00	0.00	0.00	0.00	0.00
Annual	—	—	—	—	—	—	—	—	—	—	—	—	—	—	—	—	—	—
Off-Road Equipment	0.12	0.10	0.84	1.19	< 0.005	0.03	—	0.03	0.03	—	0.03	—	180	180	0.01	< 0.005	—	181
Onsite truck	0.00	0.00	0.00	0.00	0.00	0.00	0.00	0.00	0.00	0.00	0.00	—	0.00	0.00	0.00	0.00	0.00	0.00

Offsite	—	—	—	—	—	—	—	—	—	—	—	—	—	—	—	—	—	—
Daily, Summer (Max)	—	—	—	—	—	—	—	—	—	—	—	—	—	—	—	—	—	—
Worker	0.11	0.10	0.09	1.65	0.00	0.00	0.36	0.36	0.00	0.08	0.08	—	365	365	0.02	0.01	1.14	371
Vendor	0.00	0.00	0.00	0.00	0.00	0.00	0.00	0.00	0.00	0.00	0.00	—	0.00	0.00	0.00	0.00	0.00	0.00
Hauling	0.16	0.02	2.93	0.95	0.02	0.04	0.82	0.85	0.04	0.22	0.26	—	2,868	2,868	0.12	0.47	6.24	3,016
Daily, Winter (Max)	—	—	—	—	—	—	—	—	—	—	—	—	—	—	—	—	—	—
Worker	0.11	0.10	0.12	1.40	0.00	0.00	0.36	0.36	0.00	0.08	0.08	—	346	346	< 0.005	0.01	0.03	351
Vendor	0.00	0.00	0.00	0.00	0.00	0.00	0.00	0.00	0.00	0.00	0.00	—	0.00	0.00	0.00	0.00	0.00	0.00
Hauling	0.16	0.02	3.05	0.96	0.02	0.04	0.82	0.85	0.04	0.22	0.26	—	2,868	2,868	0.12	0.47	0.16	3,010
Average Daily	—	—	—	—	—	—	—	—	—	—	—	—	—	—	—	—	—	—
Worker	0.07	0.06	0.07	0.90	0.00	0.00	0.22	0.22	0.00	0.05	0.05	—	214	214	< 0.005	0.01	0.30	217
Vendor	0.00	0.00	0.00	0.00	0.00	0.00	0.00	0.00	0.00	0.00	0.00	—	0.00	0.00	0.00	0.00	0.00	0.00
Hauling	0.10	0.01	1.89	0.58	0.01	0.02	0.49	0.52	0.02	0.13	0.16	—	1,745	1,745	0.07	0.28	1.64	1,833
Annual	—	—	—	—	—	—	—	—	—	—	—	—	—	—	—	—	—	—
Worker	0.01	0.01	0.01	0.16	0.00	0.00	0.04	0.04	0.00	0.01	0.01	—	35.4	35.4	< 0.005	< 0.005	0.05	35.9
Vendor	0.00	0.00	0.00	0.00	0.00	0.00	0.00	0.00	0.00	0.00	0.00	—	0.00	0.00	0.00	0.00	0.00	0.00
Hauling	0.02	< 0.005	0.34	0.11	< 0.005	< 0.005	0.09	0.09	< 0.005	0.02	0.03	—	289	289	0.01	0.05	0.27	304

3.8. Infrastrcture Installation (2027) - Mitigated

Criteria Pollutants (lb/day for daily, ton/yr for annual) and GHGs (lb/day for daily, MT/yr for annual)

Location	TOG	ROG	NOx	CO	SO2	PM10E	PM10D	PM10T	PM2.5E	PM2.5D	PM2.5T	BCO2	NBCO2	CO2T	CH4	N2O	R	CO2e
Onsite	—	—	—	—	—	—	—	—	—	—	—	—	—	—	—	—	—	—
Daily, Summer (Max)	—	—	—	—	—	—	—	—	—	—	—	—	—	—	—	—	—	—

Off-Road Equipment	0.13	0.13	1.00	9.13	0.01	0.02	—	0.02	0.02	—	0.02	—	1,303	1,303	0.05	0.01	—	1,308
Onsite truck	0.00	0.00	0.00	0.00	0.00	0.00	0.00	0.00	0.00	0.00	0.00	—	0.00	0.00	0.00	0.00	0.00	0.00
Daily, Winter (Max)	—	—	—	—	—	—	—	—	—	—	—	—	—	—	—	—	—	—
Off-Road Equipment	0.13	0.13	1.00	9.13	0.01	0.02	—	0.02	0.02	—	0.02	—	1,303	1,303	0.05	0.01	—	1,308
Onsite truck	0.00	0.00	0.00	0.00	0.00	0.00	0.00	0.00	0.00	0.00	0.00	—	0.00	0.00	0.00	0.00	0.00	0.00
Average Daily	—	—	—	—	—	—	—	—	—	—	—	—	—	—	—	—	—	—
Off-Road Equipment	0.08	0.08	0.61	5.56	0.01	0.01	—	0.01	0.01	—	0.01	—	793	793	0.03	0.01	—	796
Onsite truck	0.00	0.00	0.00	0.00	0.00	0.00	0.00	0.00	0.00	0.00	0.00	—	0.00	0.00	0.00	0.00	0.00	0.00
Annual	—	—	—	—	—	—	—	—	—	—	—	—	—	—	—	—	—	—
Off-Road Equipment	0.01	0.01	0.11	1.01	< 0.005	< 0.005	—	< 0.005	< 0.005	—	< 0.005	—	131	131	0.01	< 0.005	—	132
Onsite truck	0.00	0.00	0.00	0.00	0.00	0.00	0.00	0.00	0.00	0.00	0.00	—	0.00	0.00	0.00	0.00	0.00	0.00
Offsite	—	—	—	—	—	—	—	—	—	—	—	—	—	—	—	—	—	—
Daily, Summer (Max)	—	—	—	—	—	—	—	—	—	—	—	—	—	—	—	—	—	—
Worker	0.11	0.10	0.09	1.65	0.00	0.00	0.36	0.36	0.00	0.08	0.08	—	365	365	0.02	0.01	1.14	371
Vendor	0.00	0.00	0.00	0.00	0.00	0.00	0.00	0.00	0.00	0.00	0.00	—	0.00	0.00	0.00	0.00	0.00	0.00
Hauling	0.16	0.02	2.93	0.95	0.02	0.04	0.82	0.85	0.04	0.22	0.26	—	2,868	2,868	0.12	0.47	6.24	3,016
Daily, Winter (Max)	—	—	—	—	—	—	—	—	—	—	—	—	—	—	—	—	—	—
Worker	0.11	0.10	0.12	1.40	0.00	0.00	0.36	0.36	0.00	0.08	0.08	—	346	346	< 0.005	0.01	0.03	351

Vendor	0.00	0.00	0.00	0.00	0.00	0.00	0.00	0.00	0.00	0.00	0.00	—	0.00	0.00	0.00	0.00	0.00	0.00
Hauling	0.16	0.02	3.05	0.96	0.02	0.04	0.82	0.85	0.04	0.22	0.26	—	2,868	2,868	0.12	0.47	0.16	3,010
Average Daily	—	—	—	—	—	—	—	—	—	—	—	—	—	—	—	—	—	—
Worker	0.07	0.06	0.07	0.90	0.00	0.00	0.22	0.22	0.00	0.05	0.05	—	214	214	< 0.005	0.01	0.30	217
Vendor	0.00	0.00	0.00	0.00	0.00	0.00	0.00	0.00	0.00	0.00	0.00	—	0.00	0.00	0.00	0.00	0.00	0.00
Hauling	0.10	0.01	1.89	0.58	0.01	0.02	0.49	0.52	0.02	0.13	0.16	—	1,745	1,745	0.07	0.28	1.64	1,833
Annual	—	—	—	—	—	—	—	—	—	—	—	—	—	—	—	—	—	—
Worker	0.01	0.01	0.01	0.16	0.00	0.00	0.04	0.04	0.00	0.01	0.01	—	35.4	35.4	< 0.005	< 0.005	0.05	35.9
Vendor	0.00	0.00	0.00	0.00	0.00	0.00	0.00	0.00	0.00	0.00	0.00	—	0.00	0.00	0.00	0.00	0.00	0.00
Hauling	0.02	< 0.005	0.34	0.11	< 0.005	< 0.005	0.09	0.09	< 0.005	0.02	0.03	—	289	289	0.01	0.05	0.27	304

5. Activity Data

5.1. Construction Schedule

Phase Name	Phase Type	Start Date	End Date	Days Per Week	Work Days per Phase	Phase Description
Demolition	Demolition	9/30/2025	2/16/2026	5.00	100	—
Infrastructure Installation	Building Construction	5/8/2026	11/7/2027	5.00	391	—

5.2. Off-Road Equipment

5.2.1. Unmitigated

Phase Name	Equipment Type	Fuel Type	Engine Tier	Number per Day	Hours Per Day	Horsepower	Load Factor
Demolition	Generator Sets	Diesel	Average	3.00	8.00	14.0	0.74
Demolition	Rubber Tired Loaders	Diesel	Average	1.00	8.00	150	0.36
Demolition	Pressure Washers	Diesel	Average	4.00	8.00	14.0	0.30
Demolition	Rough Terrain Forklifts	Diesel	Average	2.00	8.00	96.0	0.40
Demolition	Sweepers/Scrubbers	Diesel	Average	1.00	4.00	36.0	0.46
Infrastructure Installation	Generator Sets	Diesel	Average	3.00	8.00	14.0	0.74
Infrastructure Installation	Rubber Tired Loaders	Diesel	Average	1.00	8.00	150	0.36
Infrastructure Installation	Pressure Washers	Diesel	Average	4.00	8.00	14.0	0.30
Infrastructure Installation	Rough Terrain Forklifts	Diesel	Average	2.00	8.00	96.0	0.40
Infrastructure Installation	Sweepers/Scrubbers	Diesel	Average	1.00	4.00	36.0	0.46

5.2.2. Mitigated

Phase Name	Equipment Type	Fuel Type	Engine Tier	Number per Day	Hours Per Day	Horsepower	Load Factor
Demolition	Generator Sets	Electric	Average	3.00	8.00	14.0	0.74
Demolition	Rubber Tired Loaders	Diesel	Tier 4 Final	1.00	8.00	150	0.36

Demolition	Pressure Washers	Electric	Average	4.00	8.00	14.0	0.30
Demolition	Rough Terrain Forklifts	Diesel	Tier 4 Final	2.00	8.00	96.0	0.40
Demolition	Sweepers/Scrubbers	Diesel	Tier 4 Final	1.00	4.00	36.0	0.46
Infrastructure Installation	Generator Sets	Electric	Average	3.00	8.00	14.0	0.74
Infrastructure Installation	Rubber Tired Loaders	Diesel	Tier 4 Final	1.00	8.00	150	0.36
Infrastructure Installation	Pressure Washers	Electric	Average	4.00	8.00	14.0	0.30
Infrastructure Installation	Rough Terrain Forklifts	Diesel	Tier 4 Final	2.00	8.00	96.0	0.40
Infrastructure Installation	Sweepers/Scrubbers	Diesel	Tier 4 Final	1.00	4.00	36.0	0.46

5.3. Construction Vehicles

5.3.1. Unmitigated

Phase Name	Trip Type	One-Way Trips per Day	Miles per Trip	Vehicle Mix
Demolition	—	—	—	—
Demolition	Worker	27.5	18.5	LDA,LDT1,LDT2
Demolition	Vendor	0.00	10.2	HHDT,MHDT
Demolition	Hauling	10.0	20.0	HHDT
Demolition	Onsite truck	0.00	—	HHDT
Infrastructure Installation	—	—	—	—
Infrastructure Installation	Worker	27.5	18.5	LDA,LDT1,LDT2
Infrastructure Installation	Vendor	0.00	10.2	HHDT,MHDT
Infrastructure Installation	Hauling	4.00	220	HHDT
Infrastructure Installation	Onsite truck	0.00	—	HHDT

5.3.2. Mitigated

Phase Name	Trip Type	One-Way Trips per Day	Miles per Trip	Vehicle Mix
Demolition	—	—	—	—

Demolition	Worker	27.5	18.5	LDA,LDT1,LDT2
Demolition	Vendor	0.00	10.2	HHDT,MHDT
Demolition	Hauling	10.0	20.0	HHDT
Demolition	Onsite truck	0.00	—	HHDT
Infrastructure Installation	—	—	—	—
Infrastructure Installation	Worker	27.5	18.5	LDA,LDT1,LDT2
Infrastructure Installation	Vendor	0.00	10.2	HHDT,MHDT
Infrastructure Installation	Hauling	4.00	220	HHDT
Infrastructure Installation	Onsite truck	0.00	—	HHDT

5.4. Vehicles

5.4.1. Construction Vehicle Control Strategies

Non-applicable. No control strategies activated by user.

5.5. Architectural Coatings

Phase Name	Residential Interior Area Coated (sq ft)	Residential Exterior Area Coated (sq ft)	Non-Residential Interior Area Coated (sq ft)	Non-Residential Exterior Area Coated (sq ft)	Parking Area Coated (sq ft)

5.6. Dust Mitigation

5.6.1. Construction Earthmoving Activities

Phase Name	Material Imported (Cubic Yards)	Material Exported (Cubic Yards)	Acres Graded (acres)	Material Demolished (Building Square Footage)	Acres Paved (acres)
Demolition	0.00	5,000	43.0	1,800,000	—

5.6.2. Construction Earthmoving Control Strategies

Control Strategies Applied	Frequency (per day)	PM10 Reduction	PM2.5 Reduction

Water Exposed Area	3	74%	74%
Water Demolished Area	2	36%	36%

5.7. Construction Paving

Land Use	Area Paved (acres)	% Asphalt
Other Non-Asphalt Surfaces	5.00	0%

5.8. Construction Electricity Consumption and Emissions Factors

kWh per Year and Emission Factor (lb/MWh)

Year	kWh per Year	CO2	CH4	N2O
2025	0.00	532	0.03	< 0.005
2026	0.00	532	0.03	< 0.005
2027	0.00	532	0.03	< 0.005

8. User Changes to Default Data

Screen	Justification
Construction: Construction Phases	Project Descriptions
Construction: Off-Road Equipment	Based on project information
Construction: Dust From Material Movement	Based on project information
Construction: Paving	Project roadway around reservoir
Construction: Trips and VMT	Project information

I/O Tower Seismic Upgrades

Garvey - IO tower Detailed Report

Table of Contents

1. Basic Project Information

1.1. Basic Project Information

1.2. Land Use Types

1.3. User-Selected Emission Reduction Measures by Emissions Sector

2. Emissions Summary

2.1. Construction Emissions Compared Against Thresholds

2.2. Construction Emissions by Year, Unmitigated

2.3. Construction Emissions by Year, Mitigated

3. Construction Emissions Details

3.1. Infrastructure Installation (2025) - Unmitigated

3.2. Infrastructure Installation (2025) - Mitigated

3.3. Infrastructure Installation (2026) - Unmitigated

3.4.Infrastructure Installation (2026) - Mitigated

5. Activity Data

5.1. Construction Schedule

5.2. Off-Road Equipment

5.2.1. Unmitigated

5.2.2. Mitigated

5.3. Construction Vehicles

5.3.1. Unmitigated

5.3.2. Mitigated

5.4. Vehicles

5.4.1. Construction Vehicle Control Strategies

5.5. Architectural Coatings

5.6. Dust Mitigation

5.6.1. Construction Earthmoving Activities

5.6.2. Construction Earthmoving Control Strategies

5.7. Construction Paving

5.8. Construction Electricity Consumption and Emissions Factors

8. User Changes to Default Data

1. Basic Project Information

1.1. Basic Project Information

Data Field	Value
Project Name	Garvey - IO tower
Construction Start Date	9/30/2025
Lead Agency	—
Land Use Scale	Project/site
Analysis Level for Defaults	County
Windspeed (m/s)	0.50
Precipitation (days)	18.2
Location	1061 S Orange Ave, Monterey Park, CA 91755, USA
County	Los Angeles-South Coast
City	Monterey Park
Air District	South Coast AQMD
Air Basin	South Coast
TAZ	4170
EDFZ	7
Electric Utility	Southern California Edison
Gas Utility	Southern California Gas
App Version	2022.1.1.21

1.2. Land Use Types

Land Use Subtype	Size	Unit	Lot Acreage	Building Area (sq ft)	Landscape Area (sq ft)	Special Landscape Area (sq ft)	Population	Description
Other Non-Asphalt Surfaces	0.15	Acre	0.15	0.00	0.00	0.00	—	—

1.3. User-Selected Emission Reduction Measures by Emissions Sector

Sector	#	Measure Title
Construction	C-1-A	Use Electric or Hybrid Powered Equipment
Construction	C-5	Use Advanced Engine Tiers

2. Emissions Summary

2.1. Construction Emissions Compared Against Thresholds

Criteria Pollutants (lb/day for daily, ton/yr for annual) and GHGs (lb/day for daily, MT/yr for annual)

Un/Mit.	TOG	ROG	NOx	CO	SO2	PM10E	PM10D	PM10T	PM2.5E	PM2.5D	PM2.5T	BCO2	NBCO2	CO2T	CH4	N2O	R	CO2e
Daily, Summer (Max)	—	—	—	—	—	—	—	—	—	—	—	—	—	—	—	—	—	—
Unmit.	7.31	6.12	50.3	61.1	0.10	1.99	1.42	3.41	1.83	0.34	2.17	—	11,777	11,777	0.49	0.19	5.50	11,852
Mit.	1.44	1.37	12.9	59.7	0.09	0.18	1.42	1.60	0.18	0.34	0.52	—	10,741	10,741	0.44	0.19	5.50	10,813
% Reduced	80%	78%	74%	2%	14%	91%	—	53%	90%	—	76%	—	9%	9%	9%	4%	—	9%
Daily, Winter (Max)	—	—	—	—	—	—	—	—	—	—	—	—	—	—	—	—	—	—
Unmit.	7.67	6.42	53.6	61.6	0.10	2.17	1.42	3.59	2.00	0.34	2.34	—	11,737	11,737	0.49	0.20	0.16	11,808
Mit.	1.51	1.42	13.0	59.2	0.09	0.18	1.42	1.60	0.18	0.34	0.52	—	10,706	10,706	0.45	0.19	0.16	10,774
% Reduced	80%	78%	76%	4%	14%	92%	—	55%	91%	—	78%	—	9%	9%	9%	4%	—	9%
Average Daily (Max)	—	—	—	—	—	—	—	—	—	—	—	—	—	—	—	—	—	—
Unmit.	3.03	2.54	20.9	25.1	0.04	0.83	0.58	1.41	0.76	0.14	0.90	—	4,865	4,865	0.20	0.08	0.99	4,895
Mit.	0.60	0.57	5.40	24.5	0.04	0.08	0.58	0.66	0.08	0.14	0.21	—	4,435	4,435	0.18	0.08	0.99	4,463

% Reduced	80%	78%	74%	2%	14%	91%	—	53%	90%	—	76%	—	9%	9%	9%	4%	—	9%
Annual (Max)	—	—	—	—	—	—	—	—	—	—	—	—	—	—	—	—	—	—
Unmit.	0.55	0.46	3.82	4.57	0.01	0.15	0.11	0.26	0.14	0.03	0.16	—	805	805	0.03	0.01	0.16	810
Mit.	0.11	0.10	0.99	4.47	0.01	0.01	0.11	0.12	0.01	0.03	0.04	—	734	734	0.03	0.01	0.16	739
% Reduced	80%	78%	74%	2%	14%	91%	—	53%	90%	—	76%	—	9%	9%	9%	4%	—	9%

2.2. Construction Emissions by Year, Unmitigated

Criteria Pollutants (lb/day for daily, ton/yr for annual) and GHGs (lb/day for daily, MT/yr for annual)

Year	TOG	ROG	NOx	CO	SO2	PM10E	PM10D	PM10T	PM2.5E	PM2.5D	PM2.5T	BCO2	NBCO2	CO2T	CH4	N2O	R	CO2e
Daily - Summer (Max)	—	—	—	—	—	—	—	—	—	—	—	—	—	—	—	—	—	—
2026	7.31	6.12	50.3	61.1	0.10	1.99	1.42	3.41	1.83	0.34	2.17	—	11,777	11,777	0.49	0.19	5.50	11,852
Daily - Winter (Max)	—	—	—	—	—	—	—	—	—	—	—	—	—	—	—	—	—	—
2025	7.67	6.42	53.6	61.6	0.10	2.17	1.42	3.59	2.00	0.34	2.34	—	11,737	11,737	0.49	0.20	0.16	11,808
2026	7.31	6.11	50.4	60.1	0.10	1.99	1.42	3.41	1.83	0.34	2.17	—	11,707	11,707	0.49	0.19	0.14	11,777
Average Daily	—	—	—	—	—	—	—	—	—	—	—	—	—	—	—	—	—	—
2025	0.92	0.77	6.40	7.39	0.01	0.26	0.17	0.43	0.24	0.04	0.28	—	1,403	1,403	0.06	0.02	0.31	1,412
2026	3.03	2.54	20.9	25.1	0.04	0.83	0.58	1.41	0.76	0.14	0.90	—	4,865	4,865	0.20	0.08	0.99	4,895
Annual	—	—	—	—	—	—	—	—	—	—	—	—	—	—	—	—	—	—
2025	0.17	0.14	1.17	1.35	< 0.005	0.05	0.03	0.08	0.04	0.01	0.05	—	232	232	0.01	< 0.005	0.05	234
2026	0.55	0.46	3.82	4.57	0.01	0.15	0.11	0.26	0.14	0.03	0.16	—	805	805	0.03	0.01	0.16	810

2.3. Construction Emissions by Year, Mitigated

Criteria Pollutants (lb/day for daily, ton/yr for annual) and GHGs (lb/day for daily, MT/yr for annual)

Year	TOG	ROG	NOx	CO	SO2	PM10E	PM10D	PM10T	PM2.5E	PM2.5D	PM2.5T	BCO2	NBCO2	CO2T	CH4	N2O	R	CO2e
Daily - Summer (Max)	—	—	—	—	—	—	—	—	—	—	—	—	—	—	—	—	—	—
2026	1.44	1.37	12.9	59.7	0.09	0.18	1.42	1.60	0.18	0.34	0.52	—	10,741	10,741	0.44	0.19	5.50	10,813
Daily - Winter (Max)	—	—	—	—	—	—	—	—	—	—	—	—	—	—	—	—	—	—
2025	1.51	1.42	13.0	59.2	0.09	0.18	1.42	1.60	0.18	0.34	0.52	—	10,706	10,706	0.45	0.19	0.16	10,774
2026	1.44	1.36	13.0	58.8	0.09	0.18	1.42	1.60	0.18	0.34	0.52	—	10,671	10,671	0.45	0.19	0.14	10,737
Average Daily	—	—	—	—	—	—	—	—	—	—	—	—	—	—	—	—	—	—
2025	0.18	0.17	1.56	7.10	0.01	0.02	0.17	0.19	0.02	0.04	0.06	—	1,280	1,280	0.05	0.02	0.31	1,289
2026	0.60	0.57	5.40	24.5	0.04	0.08	0.58	0.66	0.08	0.14	0.21	—	4,435	4,435	0.18	0.08	0.99	4,463
Annual	—	—	—	—	—	—	—	—	—	—	—	—	—	—	—	—	—	—
2025	0.03	0.03	0.29	1.30	< 0.005	< 0.005	0.03	0.03	< 0.005	0.01	0.01	—	212	212	0.01	< 0.005	0.05	213
2026	0.11	0.10	0.99	4.47	0.01	0.01	0.11	0.12	0.01	0.03	0.04	—	734	734	0.03	0.01	0.16	739

3. Construction Emissions Details

3.1. Infrastrcture Installation (2025) - Unmitigated

Criteria Pollutants (lb/day for daily, ton/yr for annual) and GHGs (lb/day for daily, MT/yr for annual)

Location	TOG	ROG	NOx	CO	SO2	PM10E	PM10D	PM10T	PM2.5E	PM2.5D	PM2.5T	BCO2	NBCO2	CO2T	CH4	N2O	R	CO2e
Onsite	—	—	—	—	—	—	—	—	—	—	—	—	—	—	—	—	—	—
Daily, Summer (Max)	—	—	—	—	—	—	—	—	—	—	—	—	—	—	—	—	—	—
Daily, Winter (Max)	—	—	—	—	—	—	—	—	—	—	—	—	—	—	—	—	—	—

Off-Road Equipment	7.17	5.99	52.6	55.5	0.10	2.17	—	2.17	2.00	—	2.00	—	10,011	10,011	0.41	0.08	—	10,045
Onsite truck	0.00	0.00	0.00	0.00	0.00	0.00	0.00	0.00	0.00	0.00	0.00	—	0.00	0.00	0.00	0.00	0.00	0.00
Average Daily	—	—	—	—	—	—	—	—	—	—	—	—	—	—	—	—	—	—
Off-Road Equipment	0.86	0.72	6.27	6.63	0.01	0.26	—	0.26	0.24	—	0.24	—	1,195	1,195	0.05	0.01	—	1,199
Onsite truck	0.00	0.00	0.00	0.00	0.00	0.00	0.00	0.00	0.00	0.00	0.00	—	0.00	0.00	0.00	0.00	0.00	0.00
Annual	—	—	—	—	—	—	—	—	—	—	—	—	—	—	—	—	—	—
Off-Road Equipment	0.16	0.13	1.15	1.21	< 0.005	0.05	—	0.05	0.04	—	0.04	—	198	198	0.01	< 0.005	—	199
Onsite truck	0.00	0.00	0.00	0.00	0.00	0.00	0.00	0.00	0.00	0.00	0.00	—	0.00	0.00	0.00	0.00	0.00	0.00
Offsite	—	—	—	—	—	—	—	—	—	—	—	—	—	—	—	—	—	—
Daily, Summer (Max)	—	—	—	—	—	—	—	—	—	—	—	—	—	—	—	—	—	—
Daily, Winter (Max)	—	—	—	—	—	—	—	—	—	—	—	—	—	—	—	—	—	—
Worker	0.47	0.42	0.48	5.90	0.00	0.00	1.31	1.31	0.00	0.31	0.31	—	1,311	1,311	0.06	0.05	0.13	1,327
Vendor	0.00	0.00	0.00	0.00	0.00	0.00	0.00	0.00	0.00	0.00	0.00	—	0.00	0.00	0.00	0.00	0.00	0.00
Hauling	0.03	0.01	0.53	0.20	< 0.005	0.01	0.11	0.12	0.01	0.03	0.04	—	416	416	0.02	0.07	0.03	436
Average Daily	—	—	—	—	—	—	—	—	—	—	—	—	—	—	—	—	—	—
Worker	0.06	0.05	0.06	0.74	0.00	0.00	0.15	0.15	0.00	0.04	0.04	—	159	159	0.01	0.01	0.26	161
Vendor	0.00	0.00	0.00	0.00	0.00	0.00	0.00	0.00	0.00	0.00	0.00	—	0.00	0.00	0.00	0.00	0.00	0.00
Hauling	< 0.005	< 0.005	0.06	0.02	< 0.005	< 0.005	0.01	0.01	< 0.005	< 0.005	< 0.005	—	49.6	49.6	< 0.005	0.01	0.05	52.1
Annual	—	—	—	—	—	—	—	—	—	—	—	—	—	—	—	—	—	—
Worker	0.01	0.01	0.01	0.13	0.00	0.00	0.03	0.03	0.00	0.01	0.01	—	26.3	26.3	< 0.005	< 0.005	0.04	26.6

Vendor	0.00	0.00	0.00	0.00	0.00	0.00	0.00	0.00	0.00	0.00	0.00	—	0.00	0.00	0.00	0.00	0.00	0.00
Hauling	< 0.005	< 0.005	0.01	< 0.005	< 0.005	< 0.005	< 0.005	< 0.005	< 0.005	< 0.005	< 0.005	—	8.22	8.22	< 0.005	< 0.005	0.01	8.62

3.2. Infrastrcture Installation (2025) - Mitigated

Criteria Pollutants (lb/day for daily, ton/yr for annual) and GHGs (lb/day for daily, MT/yr for annual)

Location	TOG	ROG	NOx	CO	SO2	PM10E	PM10D	PM10T	PM2.5E	PM2.5D	PM2.5T	BCO2	NBCO2	CO2T	CH4	N2O	R	CO2e
Onsite	—	—	—	—	—	—	—	—	—	—	—	—	—	—	—	—	—	—
Daily, Summer (Max)	—	—	—	—	—	—	—	—	—	—	—	—	—	—	—	—	—	—
Daily, Winter (Max)	—	—	—	—	—	—	—	—	—	—	—	—	—	—	—	—	—	—
Off-Road Equipment	1.00	0.99	12.0	53.1	0.09	0.18	—	0.18	0.18	—	0.18	—	8,972	8,972	0.36	0.07	—	9,003
Onsite truck	0.00	0.00	0.00	0.00	0.00	0.00	0.00	0.00	0.00	0.00	0.00	—	0.00	0.00	0.00	0.00	0.00	0.00
Average Daily	—	—	—	—	—	—	—	—	—	—	—	—	—	—	—	—	—	—
Off-Road Equipment	0.12	0.12	1.44	6.33	0.01	0.02	—	0.02	0.02	—	0.02	—	1,071	1,071	0.04	0.01	—	1,075
Onsite truck	0.00	0.00	0.00	0.00	0.00	0.00	0.00	0.00	0.00	0.00	0.00	—	0.00	0.00	0.00	0.00	0.00	0.00
Annual	—	—	—	—	—	—	—	—	—	—	—	—	—	—	—	—	—	—
Off-Road Equipment	0.02	0.02	0.26	1.16	< 0.005	< 0.005	—	< 0.005	< 0.005	—	< 0.005	—	177	177	0.01	< 0.005	—	178
Onsite truck	0.00	0.00	0.00	0.00	0.00	0.00	0.00	0.00	0.00	0.00	0.00	—	0.00	0.00	0.00	0.00	0.00	0.00
Offsite	—	—	—	—	—	—	—	—	—	—	—	—	—	—	—	—	—	—
Daily, Summer (Max)	—	—	—	—	—	—	—	—	—	—	—	—	—	—	—	—	—	—

Daily, Winter (Max)	—	—	—	—	—	—	—	—	—	—	—	—	—	—	—	—	—	—
Worker	0.47	0.42	0.48	5.90	0.00	0.00	1.31	1.31	0.00	0.31	0.31	—	1,311	1,311	0.06	0.05	0.13	1,327
Vendor	0.00	0.00	0.00	0.00	0.00	0.00	0.00	0.00	0.00	0.00	0.00	—	0.00	0.00	0.00	0.00	0.00	0.00
Hauling	0.03	0.01	0.53	0.20	< 0.005	0.01	0.11	0.12	0.01	0.03	0.04	—	416	416	0.02	0.07	0.03	436
Average Daily	—	—	—	—	—	—	—	—	—	—	—	—	—	—	—	—	—	—
Worker	0.06	0.05	0.06	0.74	0.00	0.00	0.15	0.15	0.00	0.04	0.04	—	159	159	0.01	0.01	0.26	161
Vendor	0.00	0.00	0.00	0.00	0.00	0.00	0.00	0.00	0.00	0.00	0.00	—	0.00	0.00	0.00	0.00	0.00	0.00
Hauling	< 0.005	< 0.005	0.06	0.02	< 0.005	< 0.005	0.01	0.01	< 0.005	< 0.005	< 0.005	—	49.6	49.6	< 0.005	0.01	0.05	52.1
Annual	—	—	—	—	—	—	—	—	—	—	—	—	—	—	—	—	—	—
Worker	0.01	0.01	0.01	0.13	0.00	0.00	0.03	0.03	0.00	0.01	0.01	—	26.3	26.3	< 0.005	< 0.005	0.04	26.6
Vendor	0.00	0.00	0.00	0.00	0.00	0.00	0.00	0.00	0.00	0.00	0.00	—	0.00	0.00	0.00	0.00	0.00	0.00
Hauling	< 0.005	< 0.005	0.01	< 0.005	< 0.005	< 0.005	< 0.005	< 0.005	< 0.005	< 0.005	< 0.005	—	8.22	8.22	< 0.005	< 0.005	0.01	8.62

3.3. Infrastrcture Installation (2026) - Unmitigated

Criteria Pollutants (lb/day for daily, ton/yr for annual) and GHGs (lb/day for daily, MT/yr for annual)

Location	TOG	ROG	NOx	CO	SO2	PM10E	PM10D	PM10T	PM2.5E	PM2.5D	PM2.5T	BCO2	NBCO2	CO2T	CH4	N2O	R	CO2e
Onsite	—	—	—	—	—	—	—	—	—	—	—	—	—	—	—	—	—	—
Daily, Summer (Max)	—	—	—	—	—	—	—	—	—	—	—	—	—	—	—	—	—	—
Off-Road Equipment	6.87	5.74	49.4	54.4	0.10	1.98	—	1.98	1.83	—	1.83	—	10,014	10,014	0.41	0.08	—	10,048
Onsite truck	0.00	0.00	0.00	0.00	0.00	0.00	0.00	0.00	0.00	0.00	0.00	—	0.00	0.00	0.00	0.00	0.00	0.00
Daily, Winter (Max)	—	—	—	—	—	—	—	—	—	—	—	—	—	—	—	—	—	—

Off-Road Equipment	6.87	5.74	49.4	54.4	0.10	1.98	—	1.98	1.83	—	1.83	—	10,014	10,014	0.41	0.08	—	10,048
Onsite truck	0.00	0.00	0.00	0.00	0.00	0.00	0.00	0.00	0.00	0.00	0.00	—	0.00	0.00	0.00	0.00	0.00	0.00
Average Daily	—	—	—	—	—	—	—	—	—	—	—	—	—	—	—	—	—	—
Off-Road Equipment	2.85	2.38	20.5	22.6	0.04	0.82	—	0.82	0.76	—	0.76	—	4,155	4,155	0.17	0.03	—	4,169
Onsite truck	0.00	0.00	0.00	0.00	0.00	0.00	0.00	0.00	0.00	0.00	0.00	—	0.00	0.00	0.00	0.00	0.00	0.00
Annual	—	—	—	—	—	—	—	—	—	—	—	—	—	—	—	—	—	—
Off-Road Equipment	0.52	0.43	3.74	4.12	0.01	0.15	—	0.15	0.14	—	0.14	—	688	688	0.03	0.01	—	690
Onsite truck	0.00	0.00	0.00	0.00	0.00	0.00	0.00	0.00	0.00	0.00	0.00	—	0.00	0.00	0.00	0.00	0.00	0.00
Offsite	—	—	—	—	—	—	—	—	—	—	—	—	—	—	—	—	—	—
Daily, Summer (Max)	—	—	—	—	—	—	—	—	—	—	—	—	—	—	—	—	—	—
Worker	0.42	0.37	0.39	6.46	0.00	0.00	1.31	1.31	0.00	0.31	0.31	—	1,355	1,355	0.06	0.05	4.58	1,375
Vendor	0.00	0.00	0.00	0.00	0.00	0.00	0.00	0.00	0.00	0.00	0.00	—	0.00	0.00	0.00	0.00	0.00	0.00
Hauling	0.03	0.01	0.49	0.19	< 0.005	0.01	0.11	0.12	0.01	0.03	0.04	—	408	408	0.02	0.07	0.92	429
Daily, Winter (Max)	—	—	—	—	—	—	—	—	—	—	—	—	—	—	—	—	—	—
Worker	0.42	0.37	0.44	5.51	0.00	0.00	1.31	1.31	0.00	0.31	0.31	—	1,284	1,284	0.06	0.05	0.12	1,300
Vendor	0.00	0.00	0.00	0.00	0.00	0.00	0.00	0.00	0.00	0.00	0.00	—	0.00	0.00	0.00	0.00	0.00	0.00
Hauling	0.03	0.01	0.51	0.20	< 0.005	0.01	0.11	0.12	0.01	0.03	0.04	—	408	408	0.02	0.07	0.02	428
Average Daily	—	—	—	—	—	—	—	—	—	—	—	—	—	—	—	—	—	—
Worker	0.17	0.15	0.20	2.39	0.00	0.00	0.54	0.54	0.00	0.13	0.13	—	541	541	0.02	0.02	0.82	548
Vendor	0.00	0.00	0.00	0.00	0.00	0.00	0.00	0.00	0.00	0.00	0.00	—	0.00	0.00	0.00	0.00	0.00	0.00

Hauling	0.01	< 0.005	0.21	0.08	< 0.005	< 0.005	0.05	0.05	< 0.005	0.01	0.01	—	169	169	0.01	0.03	0.16	178
Annual	—	—	—	—	—	—	—	—	—	—	—	—	—	—	—	—	—	—
Worker	0.03	0.03	0.04	0.44	0.00	0.00	0.10	0.10	0.00	0.02	0.02	—	89.5	89.5	< 0.005	< 0.005	0.14	90.7
Vendor	0.00	0.00	0.00	0.00	0.00	0.00	0.00	0.00	0.00	0.00	0.00	—	0.00	0.00	0.00	0.00	0.00	0.00
Hauling	< 0.005	< 0.005	0.04	0.01	< 0.005	< 0.005	0.01	0.01	< 0.005	< 0.005	< 0.005	—	28.0	28.0	< 0.005	< 0.005	0.03	29.4

3.4. Infrastrcture Installation (2026) - Mitigated

Criteria Pollutants (lb/day for daily, ton/yr for annual) and GHGs (lb/day for daily, MT/yr for annual)

Location	TOG	ROG	NOx	CO	SO2	PM10E	PM10D	PM10T	PM2.5E	PM2.5D	PM2.5T	BCO2	NBCO2	CO2T	CH4	N2O	R	CO2e
Onsite	—	—	—	—	—	—	—	—	—	—	—	—	—	—	—	—	—	—
Daily, Summer (Max)	—	—	—	—	—	—	—	—	—	—	—	—	—	—	—	—	—	—
Off-Road Equipment	1.00	0.99	12.0	53.1	0.09	0.18	—	0.18	0.18	—	0.18	—	8,976	8,976	0.36	0.07	—	9,006
Onsite truck	0.00	0.00	0.00	0.00	0.00	0.00	0.00	0.00	0.00	0.00	0.00	—	0.00	0.00	0.00	0.00	0.00	0.00
Daily, Winter (Max)	—	—	—	—	—	—	—	—	—	—	—	—	—	—	—	—	—	—
Off-Road Equipment	1.00	0.99	12.0	53.1	0.09	0.18	—	0.18	0.18	—	0.18	—	8,976	8,976	0.36	0.07	—	9,006
Onsite truck	0.00	0.00	0.00	0.00	0.00	0.00	0.00	0.00	0.00	0.00	0.00	—	0.00	0.00	0.00	0.00	0.00	0.00
Average Daily	—	—	—	—	—	—	—	—	—	—	—	—	—	—	—	—	—	—
Off-Road Equipment	0.41	0.41	4.99	22.0	0.04	0.07	—	0.07	0.07	—	0.07	—	3,724	3,724	0.15	0.03	—	3,737
Onsite truck	0.00	0.00	0.00	0.00	0.00	0.00	0.00	0.00	0.00	0.00	0.00	—	0.00	0.00	0.00	0.00	0.00	0.00
Annual	—	—	—	—	—	—	—	—	—	—	—	—	—	—	—	—	—	—

Off-Road Equipment	0.08	0.08	0.91	4.02	0.01	0.01	—	0.01	0.01	—	0.01	—	617	617	0.03	0.01	—	619
Onsite truck	0.00	0.00	0.00	0.00	0.00	0.00	0.00	0.00	0.00	0.00	0.00	—	0.00	0.00	0.00	0.00	0.00	0.00
Offsite	—	—	—	—	—	—	—	—	—	—	—	—	—	—	—	—	—	—
Daily, Summer (Max)	—	—	—	—	—	—	—	—	—	—	—	—	—	—	—	—	—	—
Worker	0.42	0.37	0.39	6.46	0.00	0.00	1.31	1.31	0.00	0.31	0.31	—	1,355	1,355	0.06	0.05	4.58	1,375
Vendor	0.00	0.00	0.00	0.00	0.00	0.00	0.00	0.00	0.00	0.00	0.00	—	0.00	0.00	0.00	0.00	0.00	0.00
Hauling	0.03	0.01	0.49	0.19	< 0.005	0.01	0.11	0.12	0.01	0.03	0.04	—	408	408	0.02	0.07	0.92	429
Daily, Winter (Max)	—	—	—	—	—	—	—	—	—	—	—	—	—	—	—	—	—	—
Worker	0.42	0.37	0.44	5.51	0.00	0.00	1.31	1.31	0.00	0.31	0.31	—	1,284	1,284	0.06	0.05	0.12	1,300
Vendor	0.00	0.00	0.00	0.00	0.00	0.00	0.00	0.00	0.00	0.00	0.00	—	0.00	0.00	0.00	0.00	0.00	0.00
Hauling	0.03	0.01	0.51	0.20	< 0.005	0.01	0.11	0.12	0.01	0.03	0.04	—	408	408	0.02	0.07	0.02	428
Average Daily	—	—	—	—	—	—	—	—	—	—	—	—	—	—	—	—	—	—
Worker	0.17	0.15	0.20	2.39	0.00	0.00	0.54	0.54	0.00	0.13	0.13	—	541	541	0.02	0.02	0.82	548
Vendor	0.00	0.00	0.00	0.00	0.00	0.00	0.00	0.00	0.00	0.00	0.00	—	0.00	0.00	0.00	0.00	0.00	0.00
Hauling	0.01	< 0.005	0.21	0.08	< 0.005	< 0.005	0.05	0.05	< 0.005	0.01	0.01	—	169	169	0.01	0.03	0.16	178
Annual	—	—	—	—	—	—	—	—	—	—	—	—	—	—	—	—	—	—
Worker	0.03	0.03	0.04	0.44	0.00	0.00	0.10	0.10	0.00	0.02	0.02	—	89.5	89.5	< 0.005	< 0.005	0.14	90.7
Vendor	0.00	0.00	0.00	0.00	0.00	0.00	0.00	0.00	0.00	0.00	0.00	—	0.00	0.00	0.00	0.00	0.00	0.00
Hauling	< 0.005	< 0.005	0.04	0.01	< 0.005	< 0.005	0.01	0.01	< 0.005	< 0.005	< 0.005	—	28.0	28.0	< 0.005	< 0.005	0.03	29.4

5. Activity Data

5.1. Construction Schedule

Phase Name	Phase Type	Start Date	End Date	Days Per Week	Work Days per Phase	Phase Description
Infrastructure Installation	Building Construction	11/1/2025	7/31/2026	5.00	195	—

5.2. Off-Road Equipment

5.2.1. Unmitigated

Phase Name	Equipment Type	Fuel Type	Engine Tier	Number per Day	Hours Per Day	Horsepower	Load Factor
Infrastructure Installation	Generator Sets	Diesel	Average	10.0	8.00	14.0	0.74
Infrastructure Installation	Cranes	Diesel	Average	2.00	8.00	367	0.29

Infrastructure Installation	Tractors/Loaders/Backhoes	Diesel	Average	2.00	8.00	84.0	0.37
Infrastructure Installation	Rubber Tired Loaders	Diesel	Average	2.00	8.00	150	0.36
Infrastructure Installation	Bore/Drill Rigs	Diesel	Average	1.00	8.00	83.0	0.50
Infrastructure Installation	Plate Compactors	Diesel	Average	1.00	9.00	8.00	0.43
Infrastructure Installation	Air Compressors	Diesel	Average	5.00	8.00	37.0	0.48
Infrastructure Installation	Rubber Tired Dozers	Diesel	Average	2.00	8.00	367	0.40
Infrastructure Installation	Excavators	Diesel	Average	2.00	8.00	36.0	0.38
Infrastructure Installation	Graders	Diesel	Average	1.00	8.00	148	0.41
Infrastructure Installation	Skid Steer Loaders	Diesel	Average	2.00	8.00	71.0	0.37

5.2.2. Mitigated

Phase Name	Equipment Type	Fuel Type	Engine Tier	Number per Day	Hours Per Day	Horsepower	Load Factor
Infrastructure Installation	Generator Sets	Electric	Average	10.0	8.00	14.0	0.74
Infrastructure Installation	Cranes	Diesel	Tier 4 Final	2.00	8.00	367	0.29
Infrastructure Installation	Tractors/Loaders/Backhoes	Diesel	Tier 4 Final	2.00	8.00	84.0	0.37
Infrastructure Installation	Rubber Tired Loaders	Diesel	Tier 4 Final	2.00	8.00	150	0.36
Infrastructure Installation	Bore/Drill Rigs	Diesel	Tier 4 Final	1.00	8.00	83.0	0.50
Infrastructure Installation	Plate Compactors	Diesel	Average	1.00	9.00	8.00	0.43
Infrastructure Installation	Air Compressors	Diesel	Tier 4 Final	5.00	8.00	37.0	0.48
Infrastructure Installation	Rubber Tired Dozers	Diesel	Tier 4 Final	2.00	8.00	367	0.40
Infrastructure Installation	Excavators	Diesel	Tier 4 Final	2.00	8.00	36.0	0.38
Infrastructure Installation	Graders	Diesel	Tier 4 Final	1.00	8.00	148	0.41
Infrastructure Installation	Skid Steer Loaders	Diesel	Tier 4 Final	2.00	8.00	71.0	0.37

5.3. Construction Vehicles

5.3.1. Unmitigated

Phase Name	Trip Type	One-Way Trips per Day	Miles per Trip	Vehicle Mix
Infrastructure Installation	—	—	—	—
Infrastructure Installation	Worker	100	18.5	LDA,LDT1,LDT2
Infrastructure Installation	Vendor	0.00	10.2	HHDT,MHDT
Infrastructure Installation	Hauling	6.00	20.0	HHDT
Infrastructure Installation	Onsite truck	0.00	—	HHDT

5.3.2. Mitigated

Phase Name	Trip Type	One-Way Trips per Day	Miles per Trip	Vehicle Mix
Infrastructure Installation	—	—	—	—
Infrastructure Installation	Worker	100	18.5	LDA,LDT1,LDT2
Infrastructure Installation	Vendor	0.00	10.2	HHDT,MHDT
Infrastructure Installation	Hauling	6.00	20.0	HHDT
Infrastructure Installation	Onsite truck	0.00	—	HHDT

5.4. Vehicles

5.4.1. Construction Vehicle Control Strategies

Non-applicable. No control strategies activated by user.

5.5. Architectural Coatings

Phase Name	Residential Interior Area Coated (sq ft)	Residential Exterior Area Coated (sq ft)	Non-Residential Interior Area Coated (sq ft)	Non-Residential Exterior Area Coated (sq ft)	Parking Area Coated (sq ft)

5.6. Dust Mitigation

5.6.1. Construction Earthmoving Activities

Phase Name	Material Imported (cy)	Material Exported (cy)	Acres Graded (acres)	Material Demolished (sq. ft.)	Acres Paved (acres)

5.6.2. Construction Earthmoving Control Strategies

Control Strategies Applied	Frequency (per day)	PM10 Reduction	PM2.5 Reduction
Water Exposed Area	3	74%	74%
Water Demolished Area	2	36%	36%

5.7. Construction Paving

Land Use	Area Paved (acres)	% Asphalt
Other Non-Asphalt Surfaces	5.00	0%

5.8. Construction Electricity Consumption and Emissions Factors

kWh per Year and Emission Factor (lb/MWh)

Year	kWh per Year	CO2	CH4	N2O
2025	0.00	532	0.03	< 0.005
2026	0.00	532	0.03	< 0.005

8. User Changes to Default Data

Screen	Justification
Construction: Construction Phases	Project Descriptions
Construction: Off-Road Equipment	Based on project information
Construction: Dust From Material Movement	Based on project information
Construction: Paving	No paving phase
Construction: Trips and VMT	Based on project information

Junction Structure

Garvey - Junction Structure Detailed Report

Table of Contents

1. Basic Project Information

1.1. Basic Project Information

1.2. Land Use Types

1.3. User-Selected Emission Reduction Measures by Emissions Sector

2. Emissions Summary

2.1. Construction Emissions Compared Against Thresholds

2.2. Construction Emissions by Year, Unmitigated

2.3. Construction Emissions by Year, Mitigated

3. Construction Emissions Details

3.1. Infrastructure Installation (2025) - Unmitigated

3.2. Infrastructure Installation (2025) - Mitigated

3.3. Infrastructure Installation (2026) - Unmitigated

3.4.Infrastructure Installation (2026) - Mitigated

5. Activity Data

5.1. Construction Schedule

5.2. Off-Road Equipment

5.2.1. Unmitigated

5.2.2. Mitigated

5.3. Construction Vehicles

5.3.1. Unmitigated

5.3.2. Mitigated

5.4. Vehicles

5.4.1. Construction Vehicle Control Strategies

5.5. Architectural Coatings

5.6. Dust Mitigation

5.6.1. Construction Earthmoving Activities

5.6.2. Construction Earthmoving Control Strategies

5.7. Construction Paving

5.8. Construction Electricity Consumption and Emissions Factors

8. User Changes to Default Data

1. Basic Project Information

1.1. Basic Project Information

Data Field	Value
Project Name	Garvey - Junction Structure
Construction Start Date	9/30/2025
Lead Agency	—
Land Use Scale	Project/site
Analysis Level for Defaults	County
Windspeed (m/s)	0.50
Precipitation (days)	18.2
Location	1061 S Orange Ave, Monterey Park, CA 91755, USA
County	Los Angeles-South Coast
City	Monterey Park
Air District	South Coast AQMD
Air Basin	South Coast
TAZ	4170
EDFZ	7
Electric Utility	Southern California Edison
Gas Utility	Southern California Gas
App Version	2022.1.1.21

1.2. Land Use Types

Land Use Subtype	Size	Unit	Lot Acreage	Building Area (sq ft)	Landscape Area (sq ft)	Special Landscape Area (sq ft)	Population	Description
Other Non-Asphalt Surfaces	0.06	Acre	0.06	0.00	0.00	0.00	—	—

1.3. User-Selected Emission Reduction Measures by Emissions Sector

Sector	#	Measure Title
Construction	C-1-A	Use Electric or Hybrid Powered Equipment
Construction	C-5	Use Advanced Engine Tiers

2. Emissions Summary

2.1. Construction Emissions Compared Against Thresholds

Criteria Pollutants (lb/day for daily, ton/yr for annual) and GHGs (lb/day for daily, MT/yr for annual)

Un/Mit.	TOG	ROG	NOx	CO	SO2	PM10E	PM10D	PM10T	PM2.5E	PM2.5D	PM2.5T	BCO2	NBCO2	CO2T	CH4	N2O	R	CO2e
Daily, Summer (Max)	—	—	—	—	—	—	—	—	—	—	—	—	—	—	—	—	—	—
Unmit.	3.00	2.51	18.6	30.0	0.04	0.64	1.42	2.06	0.59	0.34	0.93	—	5,733	5,733	0.24	0.14	5.50	5,787
Mit.	0.84	0.77	7.23	28.7	0.04	0.07	1.42	1.49	0.07	0.34	0.41	—	5,198	5,198	0.22	0.14	5.50	5,250
% Reduced	72%	69%	61%	4%	17%	89%	—	28%	88%	—	56%	—	9%	9%	9%	3%	—	9%
Daily, Winter (Max)	—	—	—	—	—	—	—	—	—	—	—	—	—	—	—	—	—	—
Unmit.	3.17	2.66	19.6	29.5	0.04	0.71	1.42	2.13	0.66	0.34	0.99	—	5,696	5,696	0.24	0.15	0.16	5,746
Mit.	0.90	0.82	7.36	28.2	0.04	0.07	1.42	1.49	0.07	0.34	0.41	—	5,163	5,163	0.22	0.14	0.16	5,211
% Reduced	72%	69%	62%	5%	17%	90%	—	30%	89%	—	59%	—	9%	9%	9%	3%	—	9%
Average Daily (Max)	—	—	—	—	—	—	—	—	—	—	—	—	—	—	—	—	—	—
Unmit.	0.70	0.59	4.40	6.88	0.01	0.15	0.33	0.48	0.14	0.08	0.22	—	1,334	1,334	0.06	0.03	0.56	1,346
Mit.	0.20	0.18	1.72	6.59	0.01	0.02	0.33	0.35	0.02	0.08	0.09	—	1,208	1,208	0.05	0.03	0.56	1,220

% Reduced	72%	69%	61%	4%	17%	89%	—	28%	88%	—	56%	—	9%	9%	9%	3%	—	9%
Annual (Max)	—	—	—	—	—	—	—	—	—	—	—	—	—	—	—	—	—	—
Unmit.	0.13	0.11	0.80	1.26	< 0.005	0.03	0.06	0.09	0.03	0.01	0.04	—	221	221	0.01	0.01	0.09	223
Mit.	0.04	0.03	0.31	1.20	< 0.005	< 0.005	0.06	0.06	< 0.005	0.01	0.02	—	200	200	0.01	0.01	0.09	202
% Reduced	72%	69%	61%	4%	17%	89%	—	28%	88%	—	56%	—	9%	9%	9%	3%	—	9%

2.2. Construction Emissions by Year, Unmitigated

Criteria Pollutants (lb/day for daily, ton/yr for annual) and GHGs (lb/day for daily, MT/yr for annual)

Year	TOG	ROG	NOx	CO	SO2	PM10E	PM10D	PM10T	PM2.5E	PM2.5D	PM2.5T	BCO2	NBCO2	CO2T	CH4	N2O	R	CO2e
Daily - Summer (Max)	—	—	—	—	—	—	—	—	—	—	—	—	—	—	—	—	—	—
2026	3.00	2.51	18.6	30.0	0.04	0.64	1.42	2.06	0.59	0.34	0.93	—	5,733	5,733	0.24	0.14	5.50	5,787
Daily - Winter (Max)	—	—	—	—	—	—	—	—	—	—	—	—	—	—	—	—	—	—
2025	3.17	2.66	19.6	29.5	0.04	0.71	1.42	2.13	0.66	0.34	0.99	—	5,696	5,696	0.24	0.15	0.16	5,746
2026	3.00	2.50	18.7	29.0	0.04	0.64	1.42	2.06	0.59	0.34	0.93	—	5,662	5,662	0.24	0.14	0.14	5,712
Average Daily	—	—	—	—	—	—	—	—	—	—	—	—	—	—	—	—	—	—
2025	0.38	0.32	2.35	3.56	0.01	0.09	0.17	0.25	0.08	0.04	0.12	—	682	682	0.03	0.02	0.31	688
2026	0.70	0.59	4.40	6.88	0.01	0.15	0.33	0.48	0.14	0.08	0.22	—	1,334	1,334	0.06	0.03	0.56	1,346
Annual	—	—	—	—	—	—	—	—	—	—	—	—	—	—	—	—	—	—
2025	0.07	0.06	0.43	0.65	< 0.005	0.02	0.03	0.05	0.01	0.01	0.02	—	113	113	< 0.005	< 0.005	0.05	114
2026	0.13	0.11	0.80	1.26	< 0.005	0.03	0.06	0.09	0.03	0.01	0.04	—	221	221	0.01	0.01	0.09	223

2.3. Construction Emissions by Year, Mitigated

Off-Road Equipment	2.67	2.23	18.6	23.4	0.04	0.71	—	0.71	0.65	—	0.65	—	3,970	3,970	0.16	0.03	—	3,983
Onsite truck	0.00	0.00	0.00	0.00	0.00	0.00	0.00	0.00	0.00	0.00	0.00	—	0.00	0.00	0.00	0.00	0.00	0.00
Average Daily	—	—	—	—	—	—	—	—	—	—	—	—	—	—	—	—	—	—
Off-Road Equipment	0.32	0.27	2.22	2.80	< 0.005	0.08	—	0.08	0.08	—	0.08	—	474	474	0.02	< 0.005	—	476
Onsite truck	0.00	0.00	0.00	0.00	0.00	0.00	0.00	0.00	0.00	0.00	0.00	—	0.00	0.00	0.00	0.00	0.00	0.00
Annual	—	—	—	—	—	—	—	—	—	—	—	—	—	—	—	—	—	—
Off-Road Equipment	0.06	0.05	0.41	0.51	< 0.005	0.02	—	0.02	0.01	—	0.01	—	78.5	78.5	< 0.005	< 0.005	—	78.7
Onsite truck	0.00	0.00	0.00	0.00	0.00	0.00	0.00	0.00	0.00	0.00	0.00	—	0.00	0.00	0.00	0.00	0.00	0.00
Offsite	—	—	—	—	—	—	—	—	—	—	—	—	—	—	—	—	—	—
Daily, Summer (Max)	—	—	—	—	—	—	—	—	—	—	—	—	—	—	—	—	—	—
Daily, Winter (Max)	—	—	—	—	—	—	—	—	—	—	—	—	—	—	—	—	—	—
Worker	0.47	0.42	0.48	5.90	0.00	0.00	1.31	1.31	0.00	0.31	0.31	—	1,311	1,311	0.06	0.05	0.13	1,327
Vendor	0.00	0.00	0.00	0.00	0.00	0.00	0.00	0.00	0.00	0.00	0.00	—	0.00	0.00	0.00	0.00	0.00	0.00
Hauling	0.03	0.01	0.53	0.20	< 0.005	0.01	0.11	0.12	0.01	0.03	0.04	—	416	416	0.02	0.07	0.03	436
Average Daily	—	—	—	—	—	—	—	—	—	—	—	—	—	—	—	—	—	—
Worker	0.06	0.05	0.06	0.74	0.00	0.00	0.15	0.15	0.00	0.04	0.04	—	159	159	0.01	0.01	0.26	161
Vendor	0.00	0.00	0.00	0.00	0.00	0.00	0.00	0.00	0.00	0.00	0.00	—	0.00	0.00	0.00	0.00	0.00	0.00
Hauling	< 0.005	< 0.005	0.06	0.02	< 0.005	< 0.005	0.01	0.01	< 0.005	< 0.005	< 0.005	—	49.6	49.6	< 0.005	0.01	0.05	52.1
Annual	—	—	—	—	—	—	—	—	—	—	—	—	—	—	—	—	—	—
Worker	0.01	0.01	0.01	0.13	0.00	0.00	0.03	0.03	0.00	0.01	0.01	—	26.3	26.3	< 0.005	< 0.005	0.04	26.6

Off-Road Equipment	2.55	2.13	17.8	23.3	0.04	0.64	—	0.64	0.59	—	0.59	—	3,970	3,970	0.16	0.03	—	3,983
Onsite truck	0.00	0.00	0.00	0.00	0.00	0.00	0.00	0.00	0.00	0.00	0.00	—	0.00	0.00	0.00	0.00	0.00	0.00
Average Daily	—	—	—	—	—	—	—	—	—	—	—	—	—	—	—	—	—	—
Off-Road Equipment	0.60	0.50	4.17	5.48	0.01	0.15	—	0.15	0.14	—	0.14	—	932	932	0.04	0.01	—	935
Onsite truck	0.00	0.00	0.00	0.00	0.00	0.00	0.00	0.00	0.00	0.00	0.00	—	0.00	0.00	0.00	0.00	0.00	0.00
Annual	—	—	—	—	—	—	—	—	—	—	—	—	—	—	—	—	—	—
Off-Road Equipment	0.11	0.09	0.76	1.00	< 0.005	0.03	—	0.03	0.03	—	0.03	—	154	154	0.01	< 0.005	—	155
Onsite truck	0.00	0.00	0.00	0.00	0.00	0.00	0.00	0.00	0.00	0.00	0.00	—	0.00	0.00	0.00	0.00	0.00	0.00
Offsite	—	—	—	—	—	—	—	—	—	—	—	—	—	—	—	—	—	—
Daily, Summer (Max)	—	—	—	—	—	—	—	—	—	—	—	—	—	—	—	—	—	—
Worker	0.42	0.37	0.39	6.46	0.00	0.00	1.31	1.31	0.00	0.31	0.31	—	1,355	1,355	0.06	0.05	4.58	1,375
Vendor	0.00	0.00	0.00	0.00	0.00	0.00	0.00	0.00	0.00	0.00	0.00	—	0.00	0.00	0.00	0.00	0.00	0.00
Hauling	0.03	0.01	0.49	0.19	< 0.005	0.01	0.11	0.12	0.01	0.03	0.04	—	408	408	0.02	0.07	0.92	429
Daily, Winter (Max)	—	—	—	—	—	—	—	—	—	—	—	—	—	—	—	—	—	—
Worker	0.42	0.37	0.44	5.51	0.00	0.00	1.31	1.31	0.00	0.31	0.31	—	1,284	1,284	0.06	0.05	0.12	1,300
Vendor	0.00	0.00	0.00	0.00	0.00	0.00	0.00	0.00	0.00	0.00	0.00	—	0.00	0.00	0.00	0.00	0.00	0.00
Hauling	0.03	0.01	0.51	0.20	< 0.005	0.01	0.11	0.12	0.01	0.03	0.04	—	408	408	0.02	0.07	0.02	428
Average Daily	—	—	—	—	—	—	—	—	—	—	—	—	—	—	—	—	—	—
Worker	0.10	0.09	0.11	1.35	0.00	0.00	0.30	0.30	0.00	0.07	0.07	—	306	306	0.01	0.01	0.47	310
Vendor	0.00	0.00	0.00	0.00	0.00	0.00	0.00	0.00	0.00	0.00	0.00	—	0.00	0.00	0.00	0.00	0.00	0.00

Off-Road Equipment	0.02	0.02	0.27	0.95	< 0.005	< 0.005	—	< 0.005	< 0.005	—	< 0.005	—	133	133	0.01	< 0.005	—	134
Onsite truck	0.00	0.00	0.00	0.00	0.00	0.00	0.00	0.00	0.00	0.00	0.00	—	0.00	0.00	0.00	0.00	0.00	0.00
Offsite	—	—	—	—	—	—	—	—	—	—	—	—	—	—	—	—	—	—
Daily, Summer (Max)	—	—	—	—	—	—	—	—	—	—	—	—	—	—	—	—	—	—
Worker	0.42	0.37	0.39	6.46	0.00	0.00	1.31	1.31	0.00	0.31	0.31	—	1,355	1,355	0.06	0.05	4.58	1,375
Vendor	0.00	0.00	0.00	0.00	0.00	0.00	0.00	0.00	0.00	0.00	0.00	—	0.00	0.00	0.00	0.00	0.00	0.00
Hauling	0.03	0.01	0.49	0.19	< 0.005	0.01	0.11	0.12	0.01	0.03	0.04	—	408	408	0.02	0.07	0.92	429
Daily, Winter (Max)	—	—	—	—	—	—	—	—	—	—	—	—	—	—	—	—	—	—
Worker	0.42	0.37	0.44	5.51	0.00	0.00	1.31	1.31	0.00	0.31	0.31	—	1,284	1,284	0.06	0.05	0.12	1,300
Vendor	0.00	0.00	0.00	0.00	0.00	0.00	0.00	0.00	0.00	0.00	0.00	—	0.00	0.00	0.00	0.00	0.00	0.00
Hauling	0.03	0.01	0.51	0.20	< 0.005	0.01	0.11	0.12	0.01	0.03	0.04	—	408	408	0.02	0.07	0.02	428
Average Daily	—	—	—	—	—	—	—	—	—	—	—	—	—	—	—	—	—	—
Worker	0.10	0.09	0.11	1.35	0.00	0.00	0.30	0.30	0.00	0.07	0.07	—	306	306	0.01	0.01	0.47	310
Vendor	0.00	0.00	0.00	0.00	0.00	0.00	0.00	0.00	0.00	0.00	0.00	—	0.00	0.00	0.00	0.00	0.00	0.00
Hauling	0.01	< 0.005	0.12	0.05	< 0.005	< 0.005	0.03	0.03	< 0.005	0.01	0.01	—	95.9	95.9	0.01	0.02	0.09	101
Annual	—	—	—	—	—	—	—	—	—	—	—	—	—	—	—	—	—	—
Worker	0.02	0.02	0.02	0.25	0.00	0.00	0.06	0.06	0.00	0.01	0.01	—	50.7	50.7	< 0.005	< 0.005	0.08	51.4
Vendor	0.00	0.00	0.00	0.00	0.00	0.00	0.00	0.00	0.00	0.00	0.00	—	0.00	0.00	0.00	0.00	0.00	0.00
Hauling	< 0.005	< 0.005	0.02	0.01	< 0.005	< 0.005	< 0.005	< 0.005	< 0.005	< 0.005	< 0.005	—	15.9	15.9	< 0.005	< 0.005	0.02	16.7

5.6.2. Construction Earthmoving Control Strategies

Control Strategies Applied	Frequency (per day)	PM10 Reduction	PM2.5 Reduction
Water Exposed Area	3	74%	74%
Water Demolished Area	2	36%	36%

5.7. Construction Paving

Land Use	Area Paved (acres)	% Asphalt
Other Non-Asphalt Surfaces	5.00	0%

5.8. Construction Electricity Consumption and Emissions Factors

kWh per Year and Emission Factor (lb/MWh)

Year	kWh per Year	CO2	CH4	N2O
2025	0.00	532	0.03	< 0.005
2026	0.00	532	0.03	< 0.005

8. User Changes to Default Data

Screen	Justification
Construction: Construction Phases	Project Descriptions
Construction: Off-Road Equipment	Based on project information
Construction: Dust From Material Movement	Based on project information
Construction: Paving	No paving phase
Construction: Trips and VMT	Based on project information

Facility Electrical Systems

Garvey - Facility Electrical System Detailed Report

Table of Contents

1. Basic Project Information

1.1. Basic Project Information

1.2. Land Use Types

1.3. User-Selected Emission Reduction Measures by Emissions Sector

2. Emissions Summary

2.1. Construction Emissions Compared Against Thresholds

2.2. Construction Emissions by Year, Unmitigated

2.3. Construction Emissions by Year, Mitigated

3. Construction Emissions Details

3.1. Site Prep (2025) - Unmitigated

3.2. Site Prep (2025) - Mitigated

3.3. Grading (2026) - Unmitigated

3.4. Grading (2026)-Mitigated

3.5. Infrastructure Installation (2026) - Unmitigated

3.6. Infrastructure Installation (2026) - Mitigated

3.7. Paving/Site Restoration (2026) - Unmitigated

3.8. Paving/Site Restoration (2026) - Mitigated

5. Activity Data

5.1. Construction Schedule

5.2. Off-Road Equipment

5.2.1. Unmitigated

5.2.2. Mitigated

5.3. Construction Vehicles

5.3.1. Unmitigated

5.3.2. Mitigated

5.4. Vehicles

5.4.1. Construction Vehicle Control Strategies

5.5. Architectural Coatings

5.6. Dust Mitigation

5.6.1. Construction Earthmoving Activities

5.6.2. Construction Earthmoving Control Strategies

5.7. Construction Paving

5.8. Construction Electricity Consumption and Emissions Factors

8. User Changes to Default Data

1. Basic Project Information

1.1. Basic Project Information

Data Field	Value
Project Name	Garvey - Facility Electrical System
Construction Start Date	9/30/2025
Lead Agency	—
Land Use Scale	Project/site
Analysis Level for Defaults	County
Windspeed (m/s)	0.50
Precipitation (days)	18.2
Location	1061 S Orange Ave, Monterey Park, CA 91755, USA
County	Los Angeles-South Coast
City	Monterey Park
Air District	South Coast AQMD
Air Basin	South Coast
TAZ	4170
EDFZ	7
Electric Utility	Southern California Edison
Gas Utility	Southern California Gas
App Version	2022.1.1.22

1.2. Land Use Types

Land Use Subtype	Size	Unit	Lot Acreage	Building Area (sq ft)	Landscape Area (sq ft)	Special Landscape Area (sq ft)	Population	Description
Other Non-Asphalt Surfaces	0.10	Acre	0.10	0.00	0.00	0.00	—	—

1.3. User-Selected Emission Reduction Measures by Emissions Sector

Sector	#	Measure Title
Construction	C-1-A	Use Electric or Hybrid Powered Equipment
Construction	C-5	Use Advanced Engine Tiers

2. Emissions Summary

2.1. Construction Emissions Compared Against Thresholds

Criteria Pollutants (lb/day for daily, ton/yr for annual) and GHGs (lb/day for daily, MT/yr for annual)

Un/Mit.	TOG	ROG	NOx	CO	SO2	PM10E	PM10D	PM10T	PM2.5E	PM2.5D	PM2.5T	BCO2	NBCO2	CO2T	CH4	N2O	R	CO2e
Daily, Summer (Max)	—	—	—	—	—	—	—	—	—	—	—	—	—	—	—	—	—	—
Unmit.	2.69	2.26	17.8	17.5	0.03	1.06	1.42	1.76	0.98	0.34	1.03	—	3,868	3,868	0.16	0.13	5.50	3,917
Mit.	0.66	0.58	5.01	17.2	0.02	0.04	1.42	1.46	0.04	0.34	0.38	—	3,557	3,557	0.15	0.13	5.50	3,604
% Reduced	76%	74%	72%	2%	17%	96%	—	17%	96%	—	64%	—	8%	8%	8%	2%	—	8%
Daily, Winter (Max)	—	—	—	—	—	—	—	—	—	—	—	—	—	—	—	—	—	—
Unmit.	1.81	1.51	11.2	16.0	0.03	0.35	1.42	1.76	0.32	0.34	0.66	—	3,798	3,798	0.17	0.13	0.14	3,841
Mit.	0.65	0.58	4.62	16.3	0.02	0.04	1.42	1.46	0.04	0.34	0.38	—	3,487	3,487	0.15	0.13	0.14	3,529
% Reduced	64%	61%	59%	-2%	17%	89%	—	17%	88%	—	43%	—	8%	8%	8%	2%	—	8%
Average Daily (Max)	—	—	—	—	—	—	—	—	—	—	—	—	—	—	—	—	—	—
Unmit.	0.96	0.81	6.15	7.92	0.01	0.25	0.53	0.78	0.23	0.13	0.36	—	1,663	1,663	0.07	0.05	0.89	1,680
Mit.	0.28	0.25	2.33	7.93	0.01	0.02	0.53	0.55	0.02	0.13	0.14	—	1,524	1,524	0.07	0.05	0.89	1,541

% Reduced	71%	69%	62%	> -0.5%	17%	92%	—	30%	92%	—	59%	—	8%	8%	8%	2%	—	8%
Annual (Max)	—	—	—	—	—	—	—	—	—	—	—	—	—	—	—	—	—	—
Unmit.	0.18	0.15	1.12	1.45	< 0.005	0.05	0.10	0.14	0.04	0.02	0.06	—	275	275	0.01	0.01	0.15	278
Mit.	0.05	0.05	0.42	1.45	< 0.005	< 0.005	0.10	0.10	< 0.005	0.02	0.03	—	252	252	0.01	0.01	0.15	255
% Reduced	71%	69%	62%	> -0.5%	17%	92%	—	30%	92%	—	59%	—	8%	8%	8%	2%	—	8%

2.2. Construction Emissions by Year, Unmitigated

Criteria Pollutants (lb/day for daily, ton/yr for annual) and GHGs (lb/day for daily, MT/yr for annual)

Year	TOG	ROG	NOx	CO	SO2	PM10E	PM10D	PM10T	PM2.5E	PM2.5D	PM2.5T	BCO2	NBCO2	CO2T	CH4	N2O	R	CO2e
Daily - Summer (Max)	—	—	—	—	—	—	—	—	—	—	—	—	—	—	—	—	—	—
2025	0.56	0.46	3.83	6.71	0.01	0.15	0.17	0.32	0.14	0.04	0.18	—	1,314	1,314	0.06	0.05	1.02	1,333
2026	2.69	2.26	17.8	17.5	0.03	1.06	1.42	1.76	0.98	0.34	1.03	—	3,868	3,868	0.16	0.13	5.50	3,917
Daily - Winter (Max)	—	—	—	—	—	—	—	—	—	—	—	—	—	—	—	—	—	—
2025	0.56	0.45	3.85	6.63	0.01	0.15	0.17	0.32	0.14	0.04	0.18	—	1,309	1,309	0.06	0.05	0.03	1,327
2026	1.81	1.51	11.2	16.0	0.03	0.35	1.42	1.76	0.32	0.34	0.66	—	3,798	3,798	0.17	0.13	0.14	3,841
Average Daily	—	—	—	—	—	—	—	—	—	—	—	—	—	—	—	—	—	—
2025	0.10	0.08	0.71	1.22	< 0.005	0.03	0.03	0.06	0.03	0.01	0.03	—	240	240	0.01	0.01	0.08	244
2026	0.96	0.81	6.15	7.92	0.01	0.25	0.53	0.78	0.23	0.13	0.36	—	1,663	1,663	0.07	0.05	0.89	1,680
Annual	—	—	—	—	—	—	—	—	—	—	—	—	—	—	—	—	—	—
2025	0.02	0.02	0.13	0.22	< 0.005	0.01	0.01	0.01	< 0.005	< 0.005	0.01	—	39.8	39.8	< 0.005	< 0.005	0.01	40.4
2026	0.18	0.15	1.12	1.45	< 0.005	0.05	0.10	0.14	0.04	0.02	0.06	—	275	275	0.01	0.01	0.15	278

2.3. Construction Emissions by Year, Mitigated

Criteria Pollutants (lb/day for daily, ton/yr for annual) and GHGs (lb/day for daily, MT/yr for annual)

Year	TOG	ROG	NOx	CO	SO2	PM10E	PM10D	PM10T	PM2.5E	PM2.5D	PM2.5T	BCO2	NBCO2	CO2T	CH4	N2O	R	CO2e
Daily - Summer (Max)	—	—	—	—	—	—	—	—	—	—	—	—	—	—	—	—	—	—
2025	0.15	0.13	1.43	7.20	0.01	0.02	0.17	0.19	0.02	0.04	0.06	—	1,314	1,314	0.06	0.05	1.02	1,333
2026	0.66	0.58	5.01	17.2	0.02	0.04	1.42	1.46	0.04	0.34	0.38	—	3,557	3,557	0.15	0.13	5.50	3,604
Daily - Winter (Max)	—	—	—	—	—	—	—	—	—	—	—	—	—	—	—	—	—	—
2025	0.15	0.13	1.44	7.12	0.01	0.02	0.17	0.19	0.02	0.04	0.06	—	1,309	1,309	0.06	0.05	0.03	1,327
2026	0.65	0.58	4.62	16.3	0.02	0.04	1.42	1.46	0.04	0.34	0.38	—	3,487	3,487	0.15	0.13	0.14	3,529
Average Daily	—	—	—	—	—	—	—	—	—	—	—	—	—	—	—	—	—	—
2025	0.03	0.02	0.27	1.31	< 0.005	< 0.005	0.03	0.04	< 0.005	0.01	0.01	—	240	240	0.01	0.01	0.08	244
2026	0.28	0.25	2.33	7.93	0.01	0.02	0.53	0.55	0.02	0.13	0.14	—	1,524	1,524	0.07	0.05	0.89	1,541
Annual	—	—	—	—	—	—	—	—	—	—	—	—	—	—	—	—	—	—
2025	0.01	< 0.005	0.05	0.24	< 0.005	< 0.005	0.01	0.01	< 0.005	< 0.005	< 0.005	—	39.8	39.8	< 0.005	< 0.005	0.01	40.4
2026	0.05	0.05	0.42	1.45	< 0.005	< 0.005	0.10	0.10	< 0.005	0.02	0.03	—	252	252	0.01	0.01	0.15	255

3. Construction Emissions Details

3.1. Site Prep (2025) - Unmitigated

Criteria Pollutants (lb/day for daily, ton/yr for annual) and GHGs (lb/day for daily, MT/yr for annual)

Location	TOG	ROG	NOx	CO	SO2	PM10E	PM10D	PM10T	PM2.5E	PM2.5D	PM2.5T	BCO2	NBCO2	CO2T	CH4	N2O	R	CO2e
Onsite	—	—	—	—	—	—	—	—	—	—	—	—	—	—	—	—	—	—

Daily, Summer (Max)	—	—	—	—	—	—	—	—	—	—	—	—	—	—	—	—	—	—
Off-Road Equipment	0.50	0.42	3.46	6.05	0.01	0.15	—	0.15	0.14	—	0.14	—	933	933	0.04	0.01	—	936
Dust From Material Movement	—	—	—	—	—	—	0.00	0.00	—	0.00	0.00	—	—	—	—	—	—	—
Onsite truck	0.00	0.00	0.00	0.00	0.00	0.00	0.00	0.00	0.00	0.00	0.00	—	0.00	0.00	0.00	0.00	0.00	0.00
Daily, Winter (Max)	—	—	—	—	—	—	—	—	—	—	—	—	—	—	—	—	—	—
Off-Road Equipment	0.50	0.42	3.46	6.05	0.01	0.15	—	0.15	0.14	—	0.14	—	933	933	0.04	0.01	—	936
Dust From Material Movement	—	—	—	—	—	—	0.00	0.00	—	0.00	0.00	—	—	—	—	—	—	—
Onsite truck	0.00	0.00	0.00	0.00	0.00	0.00	0.00	0.00	0.00	0.00	0.00	—	0.00	0.00	0.00	0.00	0.00	0.00
Average Daily	—	—	—	—	—	—	—	—	—	—	—	—	—	—	—	—	—	—
Off-Road Equipment	0.09	0.08	0.63	1.11	< 0.005	0.03	—	0.03	0.03	—	0.03	—	171	171	0.01	< 0.005	—	172
Dust From Material Movement	—	—	—	—	—	—	0.00	0.00	—	0.00	0.00	—	—	—	—	—	—	—
Onsite truck	0.00	0.00	0.00	0.00	0.00	0.00	0.00	0.00	0.00	0.00	0.00	—	0.00	0.00	0.00	0.00	0.00	0.00
Annual	—	—	—	—	—	—	—	—	—	—	—	—	—	—	—	—	—	—
Off-Road Equipment	0.02	0.01	0.12	0.20	< 0.005	< 0.005	—	< 0.005	< 0.005	—	< 0.005	—	28.4	28.4	< 0.005	< 0.005	—	28.5

Dust From Material Movement	—	—	—	—	—	—	0.00	0.00	—	0.00	0.00	—	—	—	—	—	—	—
Onsite truck	0.00	0.00	0.00	0.00	0.00	0.00	0.00	0.00	0.00	0.00	0.00	—	0.00	0.00	0.00	0.00	0.00	0.00
Offsite	—	—	—	—	—	—	—	—	—	—	—	—	—	—	—	—	—	—
Daily, Summer (Max)	—	—	—	—	—	—	—	—	—	—	—	—	—	—	—	—	—	—
Worker	0.04	0.03	0.03	0.52	0.00	0.00	0.10	0.10	0.00	0.02	0.02	—	104	104	< 0.005	< 0.005	0.38	105
Vendor	0.00	0.00	0.00	0.00	0.00	0.00	0.00	0.00	0.00	0.00	0.00	—	0.00	0.00	0.00	0.00	0.00	0.00
Hauling	0.02	< 0.005	0.34	0.13	< 0.005	< 0.005	0.07	0.08	< 0.005	0.02	0.02	—	277	277	0.02	0.04	0.64	291
Daily, Winter (Max)	—	—	—	—	—	—	—	—	—	—	—	—	—	—	—	—	—	—
Worker	0.04	0.03	0.04	0.44	0.00	0.00	0.10	0.10	0.00	0.02	0.02	—	98.3	98.3	< 0.005	< 0.005	0.01	99.5
Vendor	0.00	0.00	0.00	0.00	0.00	0.00	0.00	0.00	0.00	0.00	0.00	—	0.00	0.00	0.00	0.00	0.00	0.00
Hauling	0.02	< 0.005	0.35	0.13	< 0.005	< 0.005	0.07	0.08	< 0.005	0.02	0.02	—	277	277	0.02	0.04	0.02	291
Average Daily	—	—	—	—	—	—	—	—	—	—	—	—	—	—	—	—	—	—
Worker	0.01	0.01	0.01	0.09	0.00	0.00	0.02	0.02	0.00	< 0.005	< 0.005	—	18.3	18.3	< 0.005	< 0.005	0.03	18.6
Vendor	0.00	0.00	0.00	0.00	0.00	0.00	0.00	0.00	0.00	0.00	0.00	—	0.00	0.00	0.00	0.00	0.00	0.00
Hauling	< 0.005	< 0.005	0.07	0.02	< 0.005	< 0.005	0.01	0.01	< 0.005	< 0.005	< 0.005	—	50.9	50.9	< 0.005	0.01	0.05	53.4
Annual	—	—	—	—	—	—	—	—	—	—	—	—	—	—	—	—	—	—
Worker	< 0.005	< 0.005	< 0.005	0.02	0.00	0.00	< 0.005	< 0.005	0.00	< 0.005	< 0.005	—	3.03	3.03	< 0.005	< 0.005	< 0.005	3.07
Vendor	0.00	0.00	0.00	0.00	0.00	0.00	0.00	0.00	0.00	0.00	0.00	—	0.00	0.00	0.00	0.00	0.00	0.00
Hauling	< 0.005	< 0.005	0.01	< 0.005	< 0.005	< 0.005	< 0.005	< 0.005	< 0.005	< 0.005	< 0.005	—	8.42	8.42	< 0.005	< 0.005	0.01	8.84

3.2. Site Prep (2025) - Mitigated

Criteria Pollutants (lb/day for daily, ton/yr for annual) and GHGs (lb/day for daily, MT/yr for annual)

Location	TOG	ROG	NOx	CO	SO2	PM10E	PM10D	PM10T	PM2.5E	PM2.5D	PM2.5T	BCO2	NBCO2	CO2T	CH4	N2O	R	CO2e
Onsite	—	—	—	—	—	—	—	—	—	—	—	—	—	—	—	—	—	—
Daily, Summer (Max)	—	—	—	—	—	—	—	—	—	—	—	—	—	—	—	—	—	—
Off-Road Equipment	0.10	0.10	1.05	6.54	0.01	0.02	—	0.02	0.02	—	0.02	—	933	933	0.04	0.01	—	936
Dust From Material Movement	—	—	—	—	—	—	0.00	0.00	—	0.00	0.00	—	—	—	—	—	—	—
Onsite truck	0.00	0.00	0.00	0.00	0.00	0.00	0.00	0.00	0.00	0.00	0.00	—	0.00	0.00	0.00	0.00	0.00	0.00
Daily, Winter (Max)	—	—	—	—	—	—	—	—	—	—	—	—	—	—	—	—	—	—
Off-Road Equipment	0.10	0.10	1.05	6.54	0.01	0.02	—	0.02	0.02	—	0.02	—	933	933	0.04	0.01	—	936
Dust From Material Movement	—	—	—	—	—	—	0.00	0.00	—	0.00	0.00	—	—	—	—	—	—	—
Onsite truck	0.00	0.00	0.00	0.00	0.00	0.00	0.00	0.00	0.00	0.00	0.00	—	0.00	0.00	0.00	0.00	0.00	0.00
Average Daily	—	—	—	—	—	—	—	—	—	—	—	—	—	—	—	—	—	—
Off-Road Equipment	0.02	0.02	0.19	1.20	< 0.005	< 0.005	—	< 0.005	< 0.005	—	< 0.005	—	171	171	0.01	< 0.005	—	172
Dust From Material Movement	—	—	—	—	—	—	0.00	0.00	—	0.00	0.00	—	—	—	—	—	—	—
Onsite truck	0.00	0.00	0.00	0.00	0.00	0.00	0.00	0.00	0.00	0.00	0.00	—	0.00	0.00	0.00	0.00	0.00	0.00

Annual	—	—	—	—	—	—	—	—	—	—	—	—	—	—	—	—	—	—
Off-Road Equipment	< 0.005	< 0.005	0.04	0.22	< 0.005	< 0.005	—	< 0.005	< 0.005	—	< 0.005	—	28.4	28.4	< 0.005	< 0.005	—	28.5
Dust From Material Movement	—	—	—	—	—	—	0.00	0.00	—	0.00	0.00	—	—	—	—	—	—	—
Onsite truck	0.00	0.00	0.00	0.00	0.00	0.00	0.00	0.00	0.00	0.00	0.00	—	0.00	0.00	0.00	0.00	0.00	0.00
Offsite	—	—	—	—	—	—	—	—	—	—	—	—	—	—	—	—	—	—
Daily, Summer (Max)	—	—	—	—	—	—	—	—	—	—	—	—	—	—	—	—	—	—
Worker	0.04	0.03	0.03	0.52	0.00	0.00	0.10	0.10	0.00	0.02	0.02	—	104	104	< 0.005	< 0.005	0.38	105
Vendor	0.00	0.00	0.00	0.00	0.00	0.00	0.00	0.00	0.00	0.00	0.00	—	0.00	0.00	0.00	0.00	0.00	0.00
Hauling	0.02	< 0.005	0.34	0.13	< 0.005	< 0.005	0.07	0.08	< 0.005	0.02	0.02	—	277	277	0.02	0.04	0.64	291
Daily, Winter (Max)	—	—	—	—	—	—	—	—	—	—	—	—	—	—	—	—	—	—
Worker	0.04	0.03	0.04	0.44	0.00	0.00	0.10	0.10	0.00	0.02	0.02	—	98.3	98.3	< 0.005	< 0.005	0.01	99.5
Vendor	0.00	0.00	0.00	0.00	0.00	0.00	0.00	0.00	0.00	0.00	0.00	—	0.00	0.00	0.00	0.00	0.00	0.00
Hauling	0.02	< 0.005	0.35	0.13	< 0.005	< 0.005	0.07	0.08	< 0.005	0.02	0.02	—	277	277	0.02	0.04	0.02	291
Average Daily	—	—	—	—	—	—	—	—	—	—	—	—	—	—	—	—	—	—
Worker	0.01	0.01	0.01	0.09	0.00	0.00	0.02	0.02	0.00	< 0.005	< 0.005	—	18.3	18.3	< 0.005	< 0.005	0.03	18.6
Vendor	0.00	0.00	0.00	0.00	0.00	0.00	0.00	0.00	0.00	0.00	0.00	—	0.00	0.00	0.00	0.00	0.00	0.00
Hauling	< 0.005	< 0.005	0.07	0.02	< 0.005	< 0.005	0.01	0.01	< 0.005	< 0.005	< 0.005	—	50.9	50.9	< 0.005	0.01	0.05	53.4
Annual	—	—	—	—	—	—	—	—	—	—	—	—	—	—	—	—	—	—
Worker	< 0.005	< 0.005	< 0.005	0.02	0.00	0.00	< 0.005	< 0.005	0.00	< 0.005	< 0.005	—	3.03	3.03	< 0.005	< 0.005	< 0.005	3.07
Vendor	0.00	0.00	0.00	0.00	0.00	0.00	0.00	0.00	0.00	0.00	0.00	—	0.00	0.00	0.00	0.00	0.00	0.00
Hauling	< 0.005	< 0.005	0.01	< 0.005	< 0.005	< 0.005	< 0.005	< 0.005	< 0.005	< 0.005	< 0.005	—	8.42	8.42	< 0.005	< 0.005	0.01	8.84

3.3. Grading (2026) - Unmitigated

Criteria Pollutants (lb/day for daily, ton/yr for annual) and GHGs (lb/day for daily, MT/yr for annual)

Location	TOG	ROG	NOx	CO	SO2	PM10E	PM10D	PM10T	PM2.5E	PM2.5D	PM2.5T	BCO2	NBCO2	CO2T	CH4	N2O	R	CO2e
Onsite	—	—	—	—	—	—	—	—	—	—	—	—	—	—	—	—	—	—
Daily, Summer (Max)	—	—	—	—	—	—	—	—	—	—	—	—	—	—	—	—	—	—
Daily, Winter (Max)	—	—	—	—	—	—	—	—	—	—	—	—	—	—	—	—	—	—
Off-Road Equipment	0.07	0.06	0.84	1.50	< 0.005	0.02	—	0.02	0.02	—	0.02	—	245	245	0.01	< 0.005	—	246
Dust From Material Movement	—	—	—	—	—	—	0.00	0.00	—	0.00	0.00	—	—	—	—	—	—	—
Onsite truck	0.00	0.00	0.00	0.00	0.00	0.00	0.00	0.00	0.00	0.00	0.00	—	0.00	0.00	0.00	0.00	0.00	0.00
Average Daily	—	—	—	—	—	—	—	—	—	—	—	—	—	—	—	—	—	—
Off-Road Equipment	< 0.005	< 0.005	0.05	0.09	< 0.005	< 0.005	—	< 0.005	< 0.005	—	< 0.005	—	14.8	14.8	< 0.005	< 0.005	—	14.8
Dust From Material Movement	—	—	—	—	—	—	0.00	0.00	—	0.00	0.00	—	—	—	—	—	—	—
Onsite truck	0.00	0.00	0.00	0.00	0.00	0.00	0.00	0.00	0.00	0.00	0.00	—	0.00	0.00	0.00	0.00	0.00	0.00
Annual	—	—	—	—	—	—	—	—	—	—	—	—	—	—	—	—	—	—
Off-Road Equipment	< 0.005	< 0.005	0.01	0.02	< 0.005	< 0.005	—	< 0.005	< 0.005	—	< 0.005	—	2.44	2.44	< 0.005	< 0.005	—	2.45

Dust From Material Movement	—	—	—	—	—	—	0.00	0.00	—	0.00	0.00	—	—	—	—	—	—	—
Onsite truck	0.00	0.00	0.00	0.00	0.00	0.00	0.00	0.00	0.00	0.00	0.00	—	0.00	0.00	0.00	0.00	0.00	0.00
Offsite	—	—	—	—	—	—	—	—	—	—	—	—	—	—	—	—	—	—
Daily, Summer (Max)	—	—	—	—	—	—	—	—	—	—	—	—	—	—	—	—	—	—
Daily, Winter (Max)	—	—	—	—	—	—	—	—	—	—	—	—	—	—	—	—	—	—
Worker	0.01	0.01	0.01	0.14	0.00	0.00	0.03	0.03	0.00	0.01	0.01	—	32.1	32.1	< 0.005	< 0.005	< 0.005	32.5
Vendor	0.00	0.00	0.00	0.00	0.00	0.00	0.00	0.00	0.00	0.00	0.00	—	0.00	0.00	0.00	0.00	0.00	0.00
Hauling	0.00	0.00	0.00	0.00	0.00	0.00	0.00	0.00	0.00	0.00	0.00	—	0.00	0.00	0.00	0.00	0.00	0.00
Average Daily	—	—	—	—	—	—	—	—	—	—	—	—	—	—	—	—	—	—
Worker	< 0.005	< 0.005	< 0.005	0.01	0.00	0.00	< 0.005	< 0.005	0.00	< 0.005	< 0.005	—	1.96	1.96	< 0.005	< 0.005	< 0.005	1.99
Vendor	0.00	0.00	0.00	0.00	0.00	0.00	0.00	0.00	0.00	0.00	0.00	—	0.00	0.00	0.00	0.00	0.00	0.00
Hauling	0.00	0.00	0.00	0.00	0.00	0.00	0.00	0.00	0.00	0.00	0.00	—	0.00	0.00	0.00	0.00	0.00	0.00
Annual	—	—	—	—	—	—	—	—	—	—	—	—	—	—	—	—	—	—
Worker	< 0.005	< 0.005	< 0.005	< 0.005	0.00	0.00	< 0.005	< 0.005	0.00	< 0.005	< 0.005	—	0.33	0.33	< 0.005	< 0.005	< 0.005	0.33
Vendor	0.00	0.00	0.00	0.00	0.00	0.00	0.00	0.00	0.00	0.00	0.00	—	0.00	0.00	0.00	0.00	0.00	0.00
Hauling	0.00	0.00	0.00	0.00	0.00	0.00	0.00	0.00	0.00	0.00	0.00	—	0.00	0.00	0.00	0.00	0.00	0.00

3.4. Grading (2026) - Mitigated

Criteria Pollutants (lb/day for daily, ton/yr for annual) and GHGs (lb/day for daily, MT/yr for annual)

Location	TOG	ROG	NOx	CO	SO2	PM10E	PM10D	PM10T	PM2.5E	PM2.5D	PM2.5T	BCO2	NBCO2	CO2T	CH4	N2O	R	CO2e
Onsite	—	—	—	—	—	—	—	—	—	—	—	—	—	—	—	—	—	—

Daily, Summer (Max)	—	—	—	—	—	—	—	—	—	—	—	—	—	—	—	—	—	—
Daily, Winter (Max)	—	—	—	—	—	—	—	—	—	—	—	—	—	—	—	—	—	—
Off-Road Equipment	0.04	0.04	1.27	1.71	< 0.005	< 0.005	—	< 0.005	< 0.005	—	< 0.005	—	245	245	0.01	< 0.005	—	246
Dust From Material Movement	—	—	—	—	—	—	0.00	0.00	—	0.00	0.00	—	—	—	—	—	—	—
Onsite truck	0.00	0.00	0.00	0.00	0.00	0.00	0.00	0.00	0.00	0.00	0.00	—	0.00	0.00	0.00	0.00	0.00	0.00
Average Daily	—	—	—	—	—	—	—	—	—	—	—	—	—	—	—	—	—	—
Off-Road Equipment	< 0.005	< 0.005	0.08	0.10	< 0.005	< 0.005	—	< 0.005	< 0.005	—	< 0.005	—	14.8	14.8	< 0.005	< 0.005	—	14.8
Dust From Material Movement	—	—	—	—	—	—	0.00	0.00	—	0.00	0.00	—	—	—	—	—	—	—
Onsite truck	0.00	0.00	0.00	0.00	0.00	0.00	0.00	0.00	0.00	0.00	0.00	—	0.00	0.00	0.00	0.00	0.00	0.00
Annual	—	—	—	—	—	—	—	—	—	—	—	—	—	—	—	—	—	—
Off-Road Equipment	< 0.005	< 0.005	0.01	0.02	< 0.005	< 0.005	—	< 0.005	< 0.005	—	< 0.005	—	2.44	2.44	< 0.005	< 0.005	—	2.45
Dust From Material Movement	—	—	—	—	—	—	0.00	0.00	—	0.00	0.00	—	—	—	—	—	—	—
Onsite truck	0.00	0.00	0.00	0.00	0.00	0.00	0.00	0.00	0.00	0.00	0.00	—	0.00	0.00	0.00	0.00	0.00	0.00
Offsite	—	—	—	—	—	—	—	—	—	—	—	—	—	—	—	—	—	—

Daily, Winter (Max)	—	—	—	—	—	—	—	—	—	—	—	—	—	—	—	—	—	—
Off-Road Equipment	1.36	1.14	10.2	10.2	0.02	0.34	—	0.34	0.31	—	0.31	—	2,105	2,105	0.09	0.02	—	2,113
Onsite truck	0.00	0.00	0.00	0.00	0.00	0.00	0.00	0.00	0.00	0.00	0.00	—	0.00	0.00	0.00	0.00	0.00	0.00
Average Daily	—	—	—	—	—	—	—	—	—	—	—	—	—	—	—	—	—	—
Off-Road Equipment	0.49	0.40	3.64	3.65	0.01	0.12	—	0.12	0.11	—	0.11	—	750	750	0.03	0.01	—	752
Onsite truck	0.00	0.00	0.00	0.00	0.00	0.00	0.00	0.00	0.00	0.00	0.00	—	0.00	0.00	0.00	0.00	0.00	0.00
Annual	—	—	—	—	—	—	—	—	—	—	—	—	—	—	—	—	—	—
Off-Road Equipment	0.09	0.07	0.66	0.67	< 0.005	0.02	—	0.02	0.02	—	0.02	—	124	124	0.01	< 0.005	—	125
Onsite truck	0.00	0.00	0.00	0.00	0.00	0.00	0.00	0.00	0.00	0.00	0.00	—	0.00	0.00	0.00	0.00	0.00	0.00
Offsite	—	—	—	—	—	—	—	—	—	—	—	—	—	—	—	—	—	—
Daily, Summer (Max)	—	—	—	—	—	—	—	—	—	—	—	—	—	—	—	—	—	—
Worker	0.42	0.37	0.39	6.46	0.00	0.00	1.31	1.31	0.00	0.31	0.31	—	1,355	1,355	0.06	0.05	4.58	1,375
Vendor	0.00	0.00	0.00	0.00	0.00	0.00	0.00	0.00	0.00	0.00	0.00	—	0.00	0.00	0.00	0.00	0.00	0.00
Hauling	0.03	0.01	0.49	0.19	< 0.005	0.01	0.11	0.12	0.01	0.03	0.04	—	408	408	0.02	0.07	0.92	429
Daily, Winter (Max)	—	—	—	—	—	—	—	—	—	—	—	—	—	—	—	—	—	—
Worker	0.42	0.37	0.44	5.51	0.00	0.00	1.31	1.31	0.00	0.31	0.31	—	1,284	1,284	0.06	0.05	0.12	1,300
Vendor	0.00	0.00	0.00	0.00	0.00	0.00	0.00	0.00	0.00	0.00	0.00	—	0.00	0.00	0.00	0.00	0.00	0.00
Hauling	0.03	0.01	0.51	0.20	< 0.005	0.01	0.11	0.12	0.01	0.03	0.04	—	408	408	0.02	0.07	0.02	428
Average Daily	—	—	—	—	—	—	—	—	—	—	—	—	—	—	—	—	—	—

Onsite truck	0.00	0.00	0.00	0.00	0.00	0.00	0.00	0.00	0.00	0.00	0.00	—	0.00	0.00	0.00	0.00	0.00	0.00
Annual	—	—	—	—	—	—	—	—	—	—	—	—	—	—	—	—	—	—
Off-Road Equipment	0.01	0.01	0.24	0.69	< 0.005	< 0.005	—	< 0.005	< 0.005	—	< 0.005	—	106	106	< 0.005	< 0.005	—	106
Onsite truck	0.00	0.00	0.00	0.00	0.00	0.00	0.00	0.00	0.00	0.00	0.00	—	0.00	0.00	0.00	0.00	0.00	0.00
Offsite	—	—	—	—	—	—	—	—	—	—	—	—	—	—	—	—	—	—
Daily, Summer (Max)	—	—	—	—	—	—	—	—	—	—	—	—	—	—	—	—	—	—
Worker	0.42	0.37	0.39	6.46	0.00	0.00	1.31	1.31	0.00	0.31	0.31	—	1,355	1,355	0.06	0.05	4.58	1,375
Vendor	0.00	0.00	0.00	0.00	0.00	0.00	0.00	0.00	0.00	0.00	0.00	—	0.00	0.00	0.00	0.00	0.00	0.00
Hauling	0.03	0.01	0.49	0.19	< 0.005	0.01	0.11	0.12	0.01	0.03	0.04	—	408	408	0.02	0.07	0.92	429
Daily, Winter (Max)	—	—	—	—	—	—	—	—	—	—	—	—	—	—	—	—	—	—
Worker	0.42	0.37	0.44	5.51	0.00	0.00	1.31	1.31	0.00	0.31	0.31	—	1,284	1,284	0.06	0.05	0.12	1,300
Vendor	0.00	0.00	0.00	0.00	0.00	0.00	0.00	0.00	0.00	0.00	0.00	—	0.00	0.00	0.00	0.00	0.00	0.00
Hauling	0.03	0.01	0.51	0.20	< 0.005	0.01	0.11	0.12	0.01	0.03	0.04	—	408	408	0.02	0.07	0.02	428
Average Daily	—	—	—	—	—	—	—	—	—	—	—	—	—	—	—	—	—	—
Worker	0.15	0.13	0.17	2.05	0.00	0.00	0.46	0.46	0.00	0.11	0.11	—	464	464	0.02	0.02	0.71	470
Vendor	0.00	0.00	0.00	0.00	0.00	0.00	0.00	0.00	0.00	0.00	0.00	—	0.00	0.00	0.00	0.00	0.00	0.00
Hauling	0.01	< 0.005	0.18	0.07	< 0.005	< 0.005	0.04	0.04	< 0.005	0.01	0.01	—	145	145	0.01	0.02	0.14	153
Annual	—	—	—	—	—	—	—	—	—	—	—	—	—	—	—	—	—	—
Worker	0.03	0.02	0.03	0.37	0.00	0.00	0.08	0.08	0.00	0.02	0.02	—	76.9	76.9	< 0.005	< 0.005	0.12	77.9
Vendor	0.00	0.00	0.00	0.00	0.00	0.00	0.00	0.00	0.00	0.00	0.00	—	0.00	0.00	0.00	0.00	0.00	0.00
Hauling	< 0.005	< 0.005	0.03	0.01	< 0.005	< 0.005	0.01	0.01	< 0.005	< 0.005	< 0.005	—	24.1	24.1	< 0.005	< 0.005	0.02	25.3

3.7. Paving/Site Restoration (2026) - Unmitigated

Criteria Pollutants (lb/day for daily, ton/yr for annual) and GHGs (lb/day for daily, MT/yr for annual)

Location	TOG	ROG	NOx	CO	SO2	PM10E	PM10D	PM10T	PM2.5E	PM2.5D	PM2.5T	BCO2	NBCO2	CO2T	CH4	N2O	R	CO2e
Onsite	—	—	—	—	—	—	—	—	—	—	—	—	—	—	—	—	—	—
Daily, Summer (Max)	—	—	—	—	—	—	—	—	—	—	—	—	—	—	—	—	—	—
Off-Road Equipment	2.61	2.19	17.7	16.4	0.02	1.06	—	1.06	0.98	—	0.98	—	2,207	2,207	0.09	0.02	—	2,214
Paving	—	0.00	—	—	—	—	—	—	—	—	—	—	—	—	—	—	—	—
Onsite truck	0.00	0.00	0.00	0.00	0.00	0.00	0.00	0.00	0.00	0.00	0.00	—	0.00	0.00	0.00	0.00	0.00	0.00
Daily, Winter (Max)	—	—	—	—	—	—	—	—	—	—	—	—	—	—	—	—	—	—
Average Daily	—	—	—	—	—	—	—	—	—	—	—	—	—	—	—	—	—	—
Off-Road Equipment	0.31	0.26	2.09	1.93	< 0.005	0.12	—	0.12	0.11	—	0.11	—	260	260	0.01	< 0.005	—	261
Paving	—	0.00	—	—	—	—	—	—	—	—	—	—	—	—	—	—	—	—
Onsite truck	0.00	0.00	0.00	0.00	0.00	0.00	0.00	0.00	0.00	0.00	0.00	—	0.00	0.00	0.00	0.00	0.00	0.00
Annual	—	—	—	—	—	—	—	—	—	—	—	—	—	—	—	—	—	—
Off-Road Equipment	0.06	0.05	0.38	0.35	< 0.005	0.02	—	0.02	0.02	—	0.02	—	43.0	43.0	< 0.005	< 0.005	—	43.2
Paving	—	0.00	—	—	—	—	—	—	—	—	—	—	—	—	—	—	—	—
Onsite truck	0.00	0.00	0.00	0.00	0.00	0.00	0.00	0.00	0.00	0.00	0.00	—	0.00	0.00	0.00	0.00	0.00	0.00
Offsite	—	—	—	—	—	—	—	—	—	—	—	—	—	—	—	—	—	—
Daily, Summer (Max)	—	—	—	—	—	—	—	—	—	—	—	—	—	—	—	—	—	—

Worker	0.07	0.06	0.07	1.13	0.00	0.00	0.23	0.23	0.00	0.05	0.05	—	237	237	0.01	0.01	0.80	241
Vendor	0.00	0.00	0.00	0.00	0.00	0.00	0.00	0.00	0.00	0.00	0.00	—	0.00	0.00	0.00	0.00	0.00	0.00
Hauling	0.00	0.00	0.00	0.00	0.00	0.00	0.00	0.00	0.00	0.00	0.00	—	0.00	0.00	0.00	0.00	0.00	0.00
Daily, Winter (Max)	—	—	—	—	—	—	—	—	—	—	—	—	—	—	—	—	—	—
Average Daily	—	—	—	—	—	—	—	—	—	—	—	—	—	—	—	—	—	—
Worker	0.01	0.01	0.01	0.12	0.00	0.00	0.03	0.03	0.00	0.01	0.01	—	26.9	26.9	< 0.005	< 0.005	0.04	27.2
Vendor	0.00	0.00	0.00	0.00	0.00	0.00	0.00	0.00	0.00	0.00	0.00	—	0.00	0.00	0.00	0.00	0.00	0.00
Hauling	0.00	0.00	0.00	0.00	0.00	0.00	0.00	0.00	0.00	0.00	0.00	—	0.00	0.00	0.00	0.00	0.00	0.00
Annual	—	—	—	—	—	—	—	—	—	—	—	—	—	—	—	—	—	—
Worker	< 0.005	< 0.005	< 0.005	0.02	0.00	0.00	< 0.005	< 0.005	0.00	< 0.005	< 0.005	—	4.45	4.45	< 0.005	< 0.005	0.01	4.51
Vendor	0.00	0.00	0.00	0.00	0.00	0.00	0.00	0.00	0.00	0.00	0.00	—	0.00	0.00	0.00	0.00	0.00	0.00
Hauling	0.00	0.00	0.00	0.00	0.00	0.00	0.00	0.00	0.00	0.00	0.00	—	0.00	0.00	0.00	0.00	0.00	0.00

3.8. Paving/Site Restoration (2026) - Mitigated

Criteria Pollutants (lb/day for daily, ton/yr for annual) and GHGs (lb/day for daily, MT/yr for annual)

Location	TOG	ROG	NOx	CO	SO2	PM10E	PM10D	PM10T	PM2.5E	PM2.5D	PM2.5T	BCO2	NBCO2	CO2T	CH4	N2O	R	CO2e
Onsite	—	—	—	—	—	—	—	—	—	—	—	—	—	—	—	—	—	—
Daily, Summer (Max)	—	—	—	—	—	—	—	—	—	—	—	—	—	—	—	—	—	—
Off-Road Equipment	0.27	0.27	4.94	15.3	0.02	0.04	—	0.04	0.04	—	0.04	—	1,966	1,966	0.08	0.02	—	1,973
Paving	—	0.00	—	—	—	—	—	—	—	—	—	—	—	—	—	—	—	—
Onsite truck	0.00	0.00	0.00	0.00	0.00	0.00	0.00	0.00	0.00	0.00	0.00	—	0.00	0.00	0.00	0.00	0.00	0.00

Daily, Winter (Max)	—	—	—	—	—	—	—	—	—	—	—	—	—	—	—	—	—	—
Average Daily	—	—	—	—	—	—	—	—	—	—	—	—	—	—	—	—	—	—
Off-Road Equipment	0.03	0.03	0.58	1.81	< 0.005	< 0.005	—	< 0.005	< 0.005	—	< 0.005	—	232	232	0.01	< 0.005	—	232
Paving	—	0.00	—	—	—	—	—	—	—	—	—	—	—	—	—	—	—	—
Onsite truck	0.00	0.00	0.00	0.00	0.00	0.00	0.00	0.00	0.00	0.00	0.00	—	0.00	0.00	0.00	0.00	0.00	0.00
Annual	—	—	—	—	—	—	—	—	—	—	—	—	—	—	—	—	—	—
Off-Road Equipment	0.01	0.01	0.11	0.33	< 0.005	< 0.005	—	< 0.005	< 0.005	—	< 0.005	—	38.3	38.3	< 0.005	< 0.005	—	38.5
Paving	—	0.00	—	—	—	—	—	—	—	—	—	—	—	—	—	—	—	—
Onsite truck	0.00	0.00	0.00	0.00	0.00	0.00	0.00	0.00	0.00	0.00	0.00	—	0.00	0.00	0.00	0.00	0.00	0.00
Offsite	—	—	—	—	—	—	—	—	—	—	—	—	—	—	—	—	—	—
Daily, Summer (Max)	—	—	—	—	—	—	—	—	—	—	—	—	—	—	—	—	—	—
Worker	0.07	0.06	0.07	1.13	0.00	0.00	0.23	0.23	0.00	0.05	0.05	—	237	237	0.01	0.01	0.80	241
Vendor	0.00	0.00	0.00	0.00	0.00	0.00	0.00	0.00	0.00	0.00	0.00	—	0.00	0.00	0.00	0.00	0.00	0.00
Hauling	0.00	0.00	0.00	0.00	0.00	0.00	0.00	0.00	0.00	0.00	0.00	—	0.00	0.00	0.00	0.00	0.00	0.00
Daily, Winter (Max)	—	—	—	—	—	—	—	—	—	—	—	—	—	—	—	—	—	—
Average Daily	—	—	—	—	—	—	—	—	—	—	—	—	—	—	—	—	—	—
Worker	0.01	0.01	0.01	0.12	0.00	0.00	0.03	0.03	0.00	0.01	0.01	—	26.9	26.9	< 0.005	< 0.005	0.04	27.2
Vendor	0.00	0.00	0.00	0.00	0.00	0.00	0.00	0.00	0.00	0.00	0.00	—	0.00	0.00	0.00	0.00	0.00	0.00
Hauling	0.00	0.00	0.00	0.00	0.00	0.00	0.00	0.00	0.00	0.00	0.00	—	0.00	0.00	0.00	0.00	0.00	0.00
Annual	—	—	—	—	—	—	—	—	—	—	—	—	—	—	—	—	—	—

Worker	< 0.005	< 0.005	< 0.005	0.02	0.00	0.00	< 0.005	< 0.005	0.00	< 0.005	< 0.005	—	4.45	4.45	< 0.005	< 0.005	0.01	4.51
Vendor	0.00	0.00	0.00	0.00	0.00	0.00	0.00	0.00	0.00	0.00	0.00	—	0.00	0.00	0.00	0.00	0.00	0.00
Hauling	0.00	0.00	0.00	0.00	0.00	0.00	0.00	0.00	0.00	0.00	0.00	—	0.00	0.00	0.00	0.00	0.00	0.00

5. Activity Data

5.1. Construction Schedule

Phase Name	Phase Type	Start Date	End Date	Days Per Week	Work Days per Phase	Phase Description
Site Prep	Site Preparation	9/30/2025	12/31/2025	5.00	67.0	—
Grading	Grading	1/1/2026	1/31/2026	5.00	22.0	—

Infrastructure Installation	Building Construction	2/1/2026	7/31/2026	5.00	130	—
Paving/Site Restoration	Paving	8/1/2026	9/30/2026	5.00	43.0	—

5.2. Off-Road Equipment

5.2.1. Unmitigated

Phase Name	Equipment Type	Fuel Type	Engine Tier	Number per Day	Hours Per Day	Horsepower	Load Factor
Site Prep	Tractors/Loaders/Backhoes	Diesel	Average	1.00	8.00	84.0	0.37
Site Prep	Excavators	Diesel	Average	1.00	8.00	36.0	0.38
Site Prep	Rubber Tired Loaders	Diesel	Average	1.00	8.00	150	0.36
Grading	Skid Steer Loaders	Diesel	Average	1.00	8.00	71.0	0.37
Infrastructure Installation	Aerial Lifts	Diesel	Average	2.00	8.00	46.0	0.31
Infrastructure Installation	Air Compressors	Diesel	Average	2.00	8.00	37.0	0.48
Infrastructure Installation	Cranes	Diesel	Average	1.00	8.00	367	0.29
Infrastructure Installation	Forklifts	Diesel	Average	1.00	8.00	82.0	0.20
Infrastructure Installation	Generator Sets	Diesel	Average	3.00	8.00	14.0	0.74
Paving/Site Restoration	Rollers	Diesel	Average	2.00	8.00	50.0	0.38
Paving/Site Restoration	Air Compressors	Diesel	Average	1.00	8.00	50.0	0.48
Paving/Site Restoration	Graders	Diesel	Average	1.00	8.00	148	0.41
Paving/Site Restoration	Rubber Tired Loaders	Diesel	Average	1.00	8.00	150	0.36
Paving/Site Restoration	Paving Equipment	Diesel	Average	1.00	8.00	89.0	0.36
Paving/Site Restoration	Skid Steer Loaders	Diesel	Average	1.00	8.00	71.0	0.37

5.2.2. Mitigated

Phase Name	Equipment Type	Fuel Type	Engine Tier	Number per Day	Hours Per Day	Horsepower	Load Factor
Site Prep	Tractors/Loaders/Backhoes	Diesel	Tier 4 Final	1.00	8.00	84.0	0.37

Grading	Vendor	0.00	10.2	HHDT,MHDT
Grading	Hauling	0.00	20.0	HHDT
Grading	Onsite truck	0.00	—	HHDT
Paving/Site Restoration	—	—	—	—
Paving/Site Restoration	Worker	17.5	18.5	LDA,LDT1,LDT2
Paving/Site Restoration	Vendor	0.00	10.2	HHDT,MHDT
Paving/Site Restoration	Hauling	0.00	20.0	HHDT
Paving/Site Restoration	Onsite truck	0.00	—	HHDT

5.4. Vehicles

5.4.1. Construction Vehicle Control Strategies

Non-applicable. No control strategies activated by user.

5.5. Architectural Coatings

Phase Name	Residential Interior Area Coated (sq ft)	Residential Exterior Area Coated (sq ft)	Non-Residential Interior Area Coated (sq ft)	Non-Residential Exterior Area Coated (sq ft)	Parking Area Coated (sq ft)

5.6. Dust Mitigation

5.6.1. Construction Earthmoving Activities

Phase Name	Material Imported (Cubic Yards)	Material Exported (Cubic Yards)	Acres Graded (acres)	Material Demolished (sq. ft.)	Acres Paved (acres)
Site Prep	0.00	0.00	0.00	0.00	—
Grading	0.00	0.00	0.00	0.00	—
Paving/Site Restoration	0.00	0.00	0.00	0.00	0.10

5.6.2. Construction Earthmoving Control Strategies

Control Strategies Applied	Frequency (per day)	PM10 Reduction	PM2.5 Reduction

Water Exposed Area	3	74%	74%
Water Demolished Area	2	36%	36%

5.7. Construction Paving

Land Use	Area Paved (acres)	% Asphalt
Other Non-Asphalt Surfaces	0.10	0%

5.8. Construction Electricity Consumption and Emissions Factors

kWh per Year and Emission Factor (lb/MWh)

Year	kWh per Year	CO2	CH4	N2O
2025	0.00	532	0.03	< 0.005
2026	0.00	532	0.03	< 0.005

8. User Changes to Default Data

Screen	Justification
Construction: Construction Phases	Project Descriptions
Construction: Off-Road Equipment	Based on project information
Construction: Dust From Material Movement	Based on project information
Construction: Paving	No paving phase
Construction: Trips and VMT	Based on project information

Standby Generator

Garvey - Standby Generator Detailed Report

Table of Contents

1. Basic Project Information

1.1. Basic Project Information

1.2. Land Use Types

1.3. User-Selected Emission Reduction Measures by Emissions Sector

2. Emissions Summary

2.1. Construction Emissions Compared Against Thresholds

2.2. Construction Emissions by Year, Unmitigated

2.3. Construction Emissions by Year, Mitigated

3. Construction Emissions Details

3.1. Demolition (2025) - Unmitigated

3.2. Demolition (2025) - Mitigated

3.3. Site Prep (2025) - Unmitigated

3.4. Site Prep (2025) - Mitigated

3.5. Site Prep (2026) - Unmitigated

3.6. Site Prep (2026) - Mitigated

3.7. Grading (2026) - Unmitigated

3.8. Grading (2026) - Mitigated

3.9. Infrastructure Installation (2026) - Unmitigated

3.10. Infrastructure Installation (2026) - Mitigated

3.11. Paving/Site Restoration (2027) - Unmitigated

3.12. Paving/Site Restoration (2027) - Mitigated

5. Activity Data

5.1. Construction Schedule

5.2. Off-Road Equipment

5.2.1. Unmitigated

5.2.2. Mitigated

5.3. Construction Vehicles

5.3.1. Unmitigated

5.3.2. Mitigated

5.4. Vehicles

5.4.1. Construction Vehicle Control Strategies

5.5. Architectural Coatings

5.6. Dust Mitigation

5.6.1. Construction Earthmoving Activities

5.6.2. Construction Earthmoving Control Strategies

5.7. Construction Paving

5.8. Construction Electricity Consumption and Emissions Factors

8. User Changes to Default Data

1. Basic Project Information

1.1. Basic Project Information

Data Field	Value
Project Name	Garvey - Standby Generator
Construction Start Date	9/30/2025
Lead Agency	—
Land Use Scale	Project/site
Analysis Level for Defaults	County
Windspeed (m/s)	0.50
Precipitation (days)	18.2
Location	1061 S Orange Ave, Monterey Park, CA 91755, USA
County	Los Angeles-South Coast
City	Monterey Park
Air District	South Coast AQMD
Air Basin	South Coast
TAZ	4170
EDFZ	7
Electric Utility	Southern California Edison
Gas Utility	Southern California Gas
App Version	2022.1.1.21

1.2. Land Use Types

Land Use Subtype	Size	Unit	Lot Acreage	Building Area (sq ft)	Landscape Area (sq ft)	Special Landscape Area (sq ft)	Population	Description
Other Non-Asphalt Surfaces	0.05	Acre	0.05	0.00	0.00	0.00	—	—

1.3. User-Selected Emission Reduction Measures by Emissions Sector

Sector	#	Measure Title
Construction	C-1-A	Use Electric or Hybrid Powered Equipment
Construction	C-5	Use Advanced Engine Tiers

2. Emissions Summary

2.1. Construction Emissions Compared Against Thresholds

Criteria Pollutants (lb/day for daily, ton/yr for annual) and GHGs (lb/day for daily, MT/yr for annual)

Un/Mit.	TOG	ROG	NOx	CO	SO2	PM10E	PM10D	PM10T	PM2.5E	PM2.5D	PM2.5T	BCO2	NBCO2	CO2T	CH4	N2O	R	CO2e
Daily, Summer (Max)	—	—	—	—	—	—	—	—	—	—	—	—	—	—	—	—	—	—
Unmit.	1.81	1.51	11.1	16.9	0.03	0.35	1.42	1.76	0.32	0.34	0.66	—	3,868	3,868	0.16	0.13	5.50	3,917
Mit.	0.66	0.58	4.55	17.2	0.02	0.04	1.42	1.46	0.04	0.34	0.38	—	3,557	3,557	0.15	0.13	5.50	3,604
% Reduced	64%	61%	59%	-2%	17%	89%	—	17%	88%	—	43%	—	8%	8%	8%	2%	—	8%
Daily, Winter (Max)	—	—	—	—	—	—	—	—	—	—	—	—	—	—	—	—	—	—
Unmit.	2.63	2.21	17.4	17.3	0.03	1.03	1.42	1.76	0.95	0.34	1.00	—	3,798	3,798	0.17	0.13	0.14	3,841
Mit.	0.65	0.58	5.01	16.3	0.02	0.04	1.42	1.46	0.04	0.34	0.38	—	3,487	3,487	0.15	0.13	0.14	3,529
% Reduced	75%	74%	71%	6%	17%	96%	—	17%	96%	—	63%	—	8%	8%	8%	2%	—	8%
Average Daily (Max)	—	—	—	—	—	—	—	—	—	—	—	—	—	—	—	—	—	—
Unmit.	0.90	0.75	5.67	8.38	0.01	0.18	0.68	0.86	0.17	0.16	0.32	—	1,931	1,931	0.08	0.06	1.15	1,953
Mit.	0.33	0.29	2.48	8.61	0.01	0.02	0.68	0.70	0.02	0.16	0.18	—	1,782	1,782	0.08	0.06	1.15	1,803

% Reduced	64%	61%	56%	-3%	16%	89%	—	18%	88%	—	44%	—	8%	8%	7%	2%	—	8%
Annual (Max)	—	—	—	—	—	—	—	—	—	—	—	—	—	—	—	—	—	—
Unmit.	0.16	0.14	1.03	1.53	< 0.005	0.03	0.12	0.16	0.03	0.03	0.06	—	320	320	0.01	0.01	0.19	323
Mit.	0.06	0.05	0.45	1.57	< 0.005	< 0.005	0.12	0.13	< 0.005	0.03	0.03	—	295	295	0.01	0.01	0.19	299
% Reduced	64%	61%	56%	-3%	16%	89%	—	18%	88%	—	44%	—	8%	8%	7%	2%	—	8%

2.2. Construction Emissions by Year, Unmitigated

Criteria Pollutants (lb/day for daily, ton/yr for annual) and GHGs (lb/day for daily, MT/yr for annual)

Year	TOG	ROG	NOx	CO	SO2	PM10E	PM10D	PM10T	PM2.5E	PM2.5D	PM2.5T	BCO2	NBCO2	CO2T	CH4	N2O	R	CO2e
Daily - Summer (Max)	—	—	—	—	—	—	—	—	—	—	—	—	—	—	—	—	—	—
2025	0.41	0.34	2.55	4.56	0.01	0.11	0.10	0.21	0.10	0.03	0.13	—	850	850	0.04	0.03	0.57	861
2026	1.81	1.51	11.1	16.9	0.03	0.35	1.42	1.76	0.32	0.34	0.66	—	3,868	3,868	0.16	0.13	5.50	3,917
Daily - Winter (Max)	—	—	—	—	—	—	—	—	—	—	—	—	—	—	—	—	—	—
2025	0.41	0.34	2.65	5.33	0.01	0.12	0.10	0.21	0.11	0.03	0.13	—	857	857	0.04	0.03	0.01	861
2026	1.81	1.51	11.2	16.0	0.03	0.35	1.42	1.76	0.32	0.34	0.66	—	3,798	3,798	0.17	0.13	0.14	3,841
2027	2.63	2.21	17.4	17.3	0.02	1.03	0.23	1.26	0.95	0.05	1.00	—	2,428	2,428	0.09	0.03	0.02	2,438
Average Daily	—	—	—	—	—	—	—	—	—	—	—	—	—	—	—	—	—	—
2025	0.10	0.08	0.62	1.13	< 0.005	0.03	0.02	0.05	0.02	0.01	0.03	—	203	203	0.01	0.01	0.05	205
2026	0.90	0.75	5.67	8.38	0.01	0.18	0.68	0.86	0.16	0.16	0.32	—	1,931	1,931	0.08	0.06	1.15	1,953
2027	0.46	0.39	3.04	3.04	< 0.005	0.18	0.04	0.22	0.17	0.01	0.18	—	426	426	0.02	< 0.005	0.05	428
Annual	—	—	—	—	—	—	—	—	—	—	—	—	—	—	—	—	—	—
2025	0.02	0.01	0.11	0.21	< 0.005	< 0.005	< 0.005	0.01	< 0.005	< 0.005	0.01	—	33.6	33.6	< 0.005	< 0.005	0.01	33.9

2026	0.16	0.14	1.03	1.53	< 0.005	0.03	0.12	0.16	0.03	0.03	0.06	—	320	320	0.01	0.01	0.19	323
2027	0.08	0.07	0.56	0.56	< 0.005	0.03	0.01	0.04	0.03	< 0.005	0.03	—	70.6	70.6	< 0.005	< 0.005	0.01	70.9

2.3. Construction Emissions by Year, Mitigated

Criteria Pollutants (lb/day for daily, ton/yr for annual) and GHGs (lb/day for daily, MT/yr for annual)

Year	TOG	ROG	NOx	CO	SO2	PM10E	PM10D	PM10T	PM2.5E	PM2.5D	PM2.5T	BCO2	NBCO2	CO2T	CH4	N2O	R	CO2e
Daily - Summer (Max)	—	—	—	—	—	—	—	—	—	—	—	—	—	—	—	—	—	—
2025	0.10	0.09	1.10	4.93	0.01	0.01	0.10	0.12	0.01	0.03	0.04	—	850	850	0.04	0.03	0.57	861
2026	0.66	0.58	4.55	17.2	0.02	0.04	1.42	1.46	0.04	0.34	0.38	—	3,557	3,557	0.15	0.13	5.50	3,604
Daily - Winter (Max)	—	—	—	—	—	—	—	—	—	—	—	—	—	—	—	—	—	—
2025	0.10	0.10	1.11	5.85	0.01	0.02	0.10	0.12	0.02	0.03	0.04	—	857	857	0.04	0.03	0.01	861
2026	0.65	0.58	4.62	16.3	0.02	0.04	1.42	1.46	0.04	0.34	0.38	—	3,487	3,487	0.15	0.13	0.14	3,529
2027	0.34	0.33	5.01	16.2	0.02	0.04	0.23	0.27	0.04	0.05	0.10	—	2,187	2,187	0.08	0.02	0.02	2,197
Average Daily	—	—	—	—	—	—	—	—	—	—	—	—	—	—	—	—	—	—
2025	0.02	0.02	0.22	1.23	< 0.005	< 0.005	0.02	0.03	< 0.005	0.01	0.01	—	203	203	0.01	0.01	0.05	205
2026	0.33	0.29	2.48	8.61	0.01	0.02	0.68	0.70	0.02	0.16	0.18	—	1,782	1,782	0.08	0.06	1.15	1,803
2027	0.06	0.06	0.88	2.85	< 0.005	0.01	0.04	0.05	0.01	0.01	0.02	—	384	384	0.01	< 0.005	0.05	386
Annual	—	—	—	—	—	—	—	—	—	—	—	—	—	—	—	—	—	—
2025	< 0.005	< 0.005	0.04	0.22	< 0.005	< 0.005	< 0.005	< 0.005	< 0.005	< 0.005	< 0.005	—	33.6	33.6	< 0.005	< 0.005	0.01	33.9
2026	0.06	0.05	0.45	1.57	< 0.005	< 0.005	0.12	0.13	< 0.005	0.03	0.03	—	295	295	0.01	0.01	0.19	299
2027	0.01	0.01	0.16	0.52	< 0.005	< 0.005	0.01	0.01	< 0.005	< 0.005	< 0.005	—	63.6	63.6	< 0.005	< 0.005	0.01	63.9

3. Construction Emissions Details

3.1. Demolition (2025) - Unmitigated

Criteria Pollutants (lb/day for daily, ton/yr for annual) and GHGs (lb/day for daily, MT/yr for annual)

Location	TOG	ROG	NOx	CO	SO2	PM10E	PM10D	PM10T	PM2.5E	PM2.5D	PM2.5T	BCO2	NBCO2	CO2T	CH4	N2O	R	CO2e
Onsite	—	—	—	—	—	—	—	—	—	—	—	—	—	—	—	—	—	—
Daily, Summer (Max)	—	—	—	—	—	—	—	—	—	—	—	—	—	—	—	—	—	—
Off-Road Equipment	0.37	0.31	2.36	4.14	0.01	0.11	—	0.11	0.10	—	0.10	—	643	643	0.03	0.01	—	645
Demolition	—	—	—	—	—	—	0.00	0.00	—	0.00	0.00	—	—	—	—	—	—	—
Onsite truck	0.00	0.00	0.00	0.00	0.00	0.00	0.00	0.00	0.00	0.00	0.00	—	0.00	0.00	0.00	0.00	0.00	0.00
Daily, Winter (Max)	—	—	—	—	—	—	—	—	—	—	—	—	—	—	—	—	—	—
Off-Road Equipment	0.37	0.31	2.36	4.14	0.01	0.11	—	0.11	0.10	—	0.10	—	643	643	0.03	0.01	—	645
Demolition	—	—	—	—	—	—	0.00	0.00	—	0.00	0.00	—	—	—	—	—	—	—
Onsite truck	0.00	0.00	0.00	0.00	0.00	0.00	0.00	0.00	0.00	0.00	0.00	—	0.00	0.00	0.00	0.00	0.00	0.00
Average Daily	—	—	—	—	—	—	—	—	—	—	—	—	—	—	—	—	—	—
Off-Road Equipment	0.07	0.06	0.42	0.74	< 0.005	0.02	—	0.02	0.02	—	0.02	—	114	114	< 0.005	< 0.005	—	115
Demolition	—	—	—	—	—	—	0.00	0.00	—	0.00	0.00	—	—	—	—	—	—	—
Onsite truck	0.00	0.00	0.00	0.00	0.00	0.00	0.00	0.00	0.00	0.00	0.00	—	0.00	0.00	0.00	0.00	0.00	0.00
Annual	—	—	—	—	—	—	—	—	—	—	—	—	—	—	—	—	—	—

Off-Road Equipment	0.01	0.01	0.08	0.13	< 0.005	< 0.005	—	< 0.005	< 0.005	—	< 0.005	—	19.0	19.0	< 0.005	< 0.005	—	19.0
Demolition	—	—	—	—	—	—	0.00	0.00	—	0.00	0.00	—	—	—	—	—	—	—
Onsite truck	0.00	0.00	0.00	0.00	0.00	0.00	0.00	0.00	0.00	0.00	0.00	—	0.00	0.00	0.00	0.00	0.00	0.00
Offsite	—	—	—	—	—	—	—	—	—	—	—	—	—	—	—	—	—	—
Daily, Summer (Max)	—	—	—	—	—	—	—	—	—	—	—	—	—	—	—	—	—	—
Worker	0.02	0.02	0.02	0.35	0.00	0.00	0.07	0.07	0.00	0.02	0.02	—	69.1	69.1	< 0.005	< 0.005	0.25	70.2
Vendor	0.00	0.00	0.00	0.00	0.00	0.00	0.00	0.00	0.00	0.00	0.00	—	0.00	0.00	0.00	0.00	0.00	0.00
Hauling	0.01	< 0.005	0.17	0.07	< 0.005	< 0.005	0.04	0.04	< 0.005	0.01	0.01	—	139	139	0.01	0.02	0.32	146
Daily, Winter (Max)	—	—	—	—	—	—	—	—	—	—	—	—	—	—	—	—	—	—
Worker	0.02	0.02	0.02	0.29	0.00	0.00	0.07	0.07	0.00	0.02	0.02	—	65.5	65.5	< 0.005	< 0.005	0.01	66.4
Vendor	0.00	0.00	0.00	0.00	0.00	0.00	0.00	0.00	0.00	0.00	0.00	—	0.00	0.00	0.00	0.00	0.00	0.00
Hauling	0.01	< 0.005	0.18	0.07	< 0.005	< 0.005	0.04	0.04	< 0.005	0.01	0.01	—	139	139	0.01	0.02	0.01	145
Average Daily	—	—	—	—	—	—	—	—	—	—	—	—	—	—	—	—	—	—
Worker	< 0.005	< 0.005	< 0.005	0.06	0.00	0.00	0.01	0.01	0.00	< 0.005	< 0.005	—	11.8	11.8	< 0.005	< 0.005	0.02	12.0
Vendor	0.00	0.00	0.00	0.00	0.00	0.00	0.00	0.00	0.00	0.00	0.00	—	0.00	0.00	0.00	0.00	0.00	0.00
Hauling	< 0.005	< 0.005	0.03	0.01	< 0.005	< 0.005	0.01	0.01	< 0.005	< 0.005	< 0.005	—	24.7	24.7	< 0.005	< 0.005	0.02	25.9
Annual	—	—	—	—	—	—	—	—	—	—	—	—	—	—	—	—	—	—
Worker	< 0.005	< 0.005	< 0.005	0.01	0.00	0.00	< 0.005	< 0.005	0.00	< 0.005	< 0.005	—	1.96	1.96	< 0.005	< 0.005	< 0.005	1.99
Vendor	0.00	0.00	0.00	0.00	0.00	0.00	0.00	0.00	0.00	0.00	0.00	—	0.00	0.00	0.00	0.00	0.00	0.00
Hauling	< 0.005	< 0.005	0.01	< 0.005	< 0.005	< 0.005	< 0.005	< 0.005	< 0.005	< 0.005	< 0.005	—	4.09	4.09	< 0.005	< 0.005	< 0.005	4.29

3.2. Demolition (2025) - Mitigated

Criteria Pollutants (lb/day for daily, ton/yr for annual) and GHGs (lb/day for daily, MT/yr for annual)

Location	TOG	ROG	NOx	CO	SO2	PM10E	PM10D	PM10T	PM2.5E	PM2.5D	PM2.5T	BCO2	NBCO2	CO2T	CH4	N2O	R	CO2e
Onsite	—	—	—	—	—	—	—	—	—	—	—	—	—	—	—	—	—	—
Daily, Summer (Max)	—	—	—	—	—	—	—	—	—	—	—	—	—	—	—	—	—	—
Off-Road Equipment	0.07	0.07	0.91	4.51	0.01	0.01	—	0.01	0.01	—	0.01	—	643	643	0.03	0.01	—	645
Demolition	—	—	—	—	—	—	0.00	0.00	—	0.00	0.00	—	—	—	—	—	—	—
Onsite truck	0.00	0.00	0.00	0.00	0.00	0.00	0.00	0.00	0.00	0.00	0.00	—	0.00	0.00	0.00	0.00	0.00	0.00
Daily, Winter (Max)	—	—	—	—	—	—	—	—	—	—	—	—	—	—	—	—	—	—
Off-Road Equipment	0.07	0.07	0.91	4.51	0.01	0.01	—	0.01	0.01	—	0.01	—	643	643	0.03	0.01	—	645
Demolition	—	—	—	—	—	—	0.00	0.00	—	0.00	0.00	—	—	—	—	—	—	—
Onsite truck	0.00	0.00	0.00	0.00	0.00	0.00	0.00	0.00	0.00	0.00	0.00	—	0.00	0.00	0.00	0.00	0.00	0.00
Average Daily	—	—	—	—	—	—	—	—	—	—	—	—	—	—	—	—	—	—
Off-Road Equipment	0.01	0.01	0.16	0.80	< 0.005	< 0.005	—	< 0.005	< 0.005	—	< 0.005	—	114	114	< 0.005	< 0.005	—	115
Demolition	—	—	—	—	—	—	0.00	0.00	—	0.00	0.00	—	—	—	—	—	—	—
Onsite truck	0.00	0.00	0.00	0.00	0.00	0.00	0.00	0.00	0.00	0.00	0.00	—	0.00	0.00	0.00	0.00	0.00	0.00
Annual	—	—	—	—	—	—	—	—	—	—	—	—	—	—	—	—	—	—
Off-Road Equipment	< 0.005	< 0.005	0.03	0.15	< 0.005	< 0.005	—	< 0.005	< 0.005	—	< 0.005	—	19.0	19.0	< 0.005	< 0.005	—	19.0
Demolition	—	—	—	—	—	—	0.00	0.00	—	0.00	0.00	—	—	—	—	—	—	—

Onsite truck	0.00	0.00	0.00	0.00	0.00	0.00	0.00	0.00	0.00	0.00	0.00	—	0.00	0.00	0.00	0.00	0.00	0.00
Offsite	—	—	—	—	—	—	—	—	—	—	—	—	—	—	—	—	—	—
Daily, Summer (Max)	—	—	—	—	—	—	—	—	—	—	—	—	—	—	—	—	—	—
Worker	0.02	0.02	0.02	0.35	0.00	0.00	0.07	0.07	0.00	0.02	0.02	—	69.1	69.1	< 0.005	< 0.005	0.25	70.2
Vendor	0.00	0.00	0.00	0.00	0.00	0.00	0.00	0.00	0.00	0.00	0.00	—	0.00	0.00	0.00	0.00	0.00	0.00
Hauling	0.01	< 0.005	0.17	0.07	< 0.005	< 0.005	0.04	0.04	< 0.005	0.01	0.01	—	139	139	0.01	0.02	0.32	146
Daily, Winter (Max)	—	—	—	—	—	—	—	—	—	—	—	—	—	—	—	—	—	—
Worker	0.02	0.02	0.02	0.29	0.00	0.00	0.07	0.07	0.00	0.02	0.02	—	65.5	65.5	< 0.005	< 0.005	0.01	66.4
Vendor	0.00	0.00	0.00	0.00	0.00	0.00	0.00	0.00	0.00	0.00	0.00	—	0.00	0.00	0.00	0.00	0.00	0.00
Hauling	0.01	< 0.005	0.18	0.07	< 0.005	< 0.005	0.04	0.04	< 0.005	0.01	0.01	—	139	139	0.01	0.02	0.01	145
Average Daily	—	—	—	—	—	—	—	—	—	—	—	—	—	—	—	—	—	—
Worker	< 0.005	< 0.005	< 0.005	0.06	0.00	0.00	0.01	0.01	0.00	< 0.005	< 0.005	—	11.8	11.8	< 0.005	< 0.005	0.02	12.0
Vendor	0.00	0.00	0.00	0.00	0.00	0.00	0.00	0.00	0.00	0.00	0.00	—	0.00	0.00	0.00	0.00	0.00	0.00
Hauling	< 0.005	< 0.005	0.03	0.01	< 0.005	< 0.005	0.01	0.01	< 0.005	< 0.005	< 0.005	—	24.7	24.7	< 0.005	< 0.005	0.02	25.9
Annual	—	—	—	—	—	—	—	—	—	—	—	—	—	—	—	—	—	—
Worker	< 0.005	< 0.005	< 0.005	0.01	0.00	0.00	< 0.005	< 0.005	0.00	< 0.005	< 0.005	—	1.96	1.96	< 0.005	< 0.005	< 0.005	1.99
Vendor	0.00	0.00	0.00	0.00	0.00	0.00	0.00	0.00	0.00	0.00	0.00	—	0.00	0.00	0.00	0.00	0.00	0.00
Hauling	< 0.005	< 0.005	0.01	< 0.005	< 0.005	< 0.005	< 0.005	< 0.005	< 0.005	< 0.005	< 0.005	—	4.09	4.09	< 0.005	< 0.005	< 0.005	4.29

3.3. Site Prep (2025) - Unmitigated

Criteria Pollutants (lb/day for daily, ton/yr for annual) and GHGs (lb/day for daily, MT/yr for annual)

Location	TOG	ROG	NOx	CO	SO2	PM10E	PM10D	PM10T	PM2.5E	PM2.5D	PM2.5T	BCO2	NBCO2	CO2T	CH4	N2O	R	CO2e
Onsite	—	—	—	—	—	—	—	—	—	—	—	—	—	—	—	—	—	—

Daily, Summer (Max)	—	—	—	—	—	—	—	—	—	—	—	—	—	—	—	—	—	—
Daily, Winter (Max)	—	—	—	—	—	—	—	—	—	—	—	—	—	—	—	—	—	—
Off-Road Equipment	0.38	0.32	2.63	5.04	0.01	0.12	—	0.12	0.11	—	0.11	—	792	792	0.03	0.01	—	794
Dust From Material Movement	—	—	—	—	—	—	0.00	0.00	—	0.00	0.00	—	—	—	—	—	—	—
Onsite truck	0.00	0.00	0.00	0.00	0.00	0.00	0.00	0.00	0.00	0.00	0.00	—	0.00	0.00	0.00	0.00	0.00	0.00
Average Daily	—	—	—	—	—	—	—	—	—	—	—	—	—	—	—	—	—	—
Off-Road Equipment	0.02	0.02	0.16	0.31	< 0.005	0.01	—	0.01	0.01	—	0.01	—	48.0	48.0	< 0.005	< 0.005	—	48.2
Dust From Material Movement	—	—	—	—	—	—	0.00	0.00	—	0.00	0.00	—	—	—	—	—	—	—
Onsite truck	0.00	0.00	0.00	0.00	0.00	0.00	0.00	0.00	0.00	0.00	0.00	—	0.00	0.00	0.00	0.00	0.00	0.00
Annual	—	—	—	—	—	—	—	—	—	—	—	—	—	—	—	—	—	—
Off-Road Equipment	< 0.005	< 0.005	0.03	0.06	< 0.005	< 0.005	—	< 0.005	< 0.005	—	< 0.005	—	7.95	7.95	< 0.005	< 0.005	—	7.98
Dust From Material Movement	—	—	—	—	—	—	0.00	0.00	—	0.00	0.00	—	—	—	—	—	—	—
Onsite truck	0.00	0.00	0.00	0.00	0.00	0.00	0.00	0.00	0.00	0.00	0.00	—	0.00	0.00	0.00	0.00	0.00	0.00
Offsite	—	—	—	—	—	—	—	—	—	—	—	—	—	—	—	—	—	—

Daily, Summer (Max)	—	—	—	—	—	—	—	—	—	—	—	—	—	—	—	—	—	—
Daily, Winter (Max)	—	—	—	—	—	—	—	—	—	—	—	—	—	—	—	—	—	—
Worker	0.02	0.02	0.02	0.29	0.00	0.00	0.07	0.07	0.00	0.02	0.02	—	65.5	65.5	< 0.005	< 0.005	0.01	66.4
Vendor	0.00	0.00	0.00	0.00	0.00	0.00	0.00	0.00	0.00	0.00	0.00	—	0.00	0.00	0.00	0.00	0.00	0.00
Hauling	0.00	0.00	0.00	0.00	0.00	0.00	0.00	0.00	0.00	0.00	0.00	—	0.00	0.00	0.00	0.00	0.00	0.00
Average Daily	—	—	—	—	—	—	—	—	—	—	—	—	—	—	—	—	—	—
Worker	< 0.005	< 0.005	< 0.005	0.02	0.00	0.00	< 0.005	< 0.005	0.00	< 0.005	< 0.005	—	4.03	4.03	< 0.005	< 0.005	0.01	4.09
Vendor	0.00	0.00	0.00	0.00	0.00	0.00	0.00	0.00	0.00	0.00	0.00	—	0.00	0.00	0.00	0.00	0.00	0.00
Hauling	0.00	0.00	0.00	0.00	0.00	0.00	0.00	0.00	0.00	0.00	0.00	—	0.00	0.00	0.00	0.00	0.00	0.00
Annual	—	—	—	—	—	—	—	—	—	—	—	—	—	—	—	—	—	—
Worker	< 0.005	< 0.005	< 0.005	< 0.005	0.00	0.00	< 0.005	< 0.005	0.00	< 0.005	< 0.005	—	0.67	0.67	< 0.005	< 0.005	< 0.005	0.68
Vendor	0.00	0.00	0.00	0.00	0.00	0.00	0.00	0.00	0.00	0.00	0.00	—	0.00	0.00	0.00	0.00	0.00	0.00
Hauling	0.00	0.00	0.00	0.00	0.00	0.00	0.00	0.00	0.00	0.00	0.00	—	0.00	0.00	0.00	0.00	0.00	0.00

3.4. Site Prep (2025) - Mitigated

Criteria Pollutants (lb/day for daily, ton/yr for annual) and GHGs (lb/day for daily, MT/yr for annual)

Location	TOG	ROG	NOx	CO	SO2	PM10E	PM10D	PM10T	PM2.5E	PM2.5D	PM2.5T	BCO2	NBCO2	CO2T	CH4	N2O	R	CO2e
Onsite	—	—	—	—	—	—	—	—	—	—	—	—	—	—	—	—	—	—
Daily, Summer (Max)	—	—	—	—	—	—	—	—	—	—	—	—	—	—	—	—	—	—
Daily, Winter (Max)	—	—	—	—	—	—	—	—	—	—	—	—	—	—	—	—	—	—
Off-Road Equipment	0.08	0.08	0.39	5.55	0.01	0.02	—	0.02	0.02	—	0.02	—	792	792	0.03	0.01	—	794

Dust From Material Movement	—	—	—	—	—	—	0.00	0.00	—	0.00	0.00	—	—	—	—	—	—	—
Onsite truck	0.00	0.00	0.00	0.00	0.00	0.00	0.00	0.00	0.00	0.00	0.00	—	0.00	0.00	0.00	0.00	0.00	0.00
Average Daily	—	—	—	—	—	—	—	—	—	—	—	—	—	—	—	—	—	—
Off-Road Equipment	< 0.005	< 0.005	0.02	0.34	< 0.005	< 0.005	—	< 0.005	< 0.005	—	< 0.005	—	48.0	48.0	< 0.005	< 0.005	—	48.2
Dust From Material Movement	—	—	—	—	—	—	0.00	0.00	—	0.00	0.00	—	—	—	—	—	—	—
Onsite truck	0.00	0.00	0.00	0.00	0.00	0.00	0.00	0.00	0.00	0.00	0.00	—	0.00	0.00	0.00	0.00	0.00	0.00
Annual	—	—	—	—	—	—	—	—	—	—	—	—	—	—	—	—	—	—
Off-Road Equipment	< 0.005	< 0.005	< 0.005	0.06	< 0.005	< 0.005	—	< 0.005	< 0.005	—	< 0.005	—	7.95	7.95	< 0.005	< 0.005	—	7.98
Dust From Material Movement	—	—	—	—	—	—	0.00	0.00	—	0.00	0.00	—	—	—	—	—	—	—
Onsite truck	0.00	0.00	0.00	0.00	0.00	0.00	0.00	0.00	0.00	0.00	0.00	—	0.00	0.00	0.00	0.00	0.00	0.00
Offsite	—	—	—	—	—	—	—	—	—	—	—	—	—	—	—	—	—	—
Daily, Summer (Max)	—	—	—	—	—	—	—	—	—	—	—	—	—	—	—	—	—	—
Daily, Winter (Max)	—	—	—	—	—	—	—	—	—	—	—	—	—	—	—	—	—	—
Worker	0.02	0.02	0.02	0.29	0.00	0.00	0.07	0.07	0.00	0.02	0.02	—	65.5	65.5	< 0.005	< 0.005	0.01	66.4
Vendor	0.00	0.00	0.00	0.00	0.00	0.00	0.00	0.00	0.00	0.00	0.00	—	0.00	0.00	0.00	0.00	0.00	0.00
Hauling	0.00	0.00	0.00	0.00	0.00	0.00	0.00	0.00	0.00	0.00	0.00	—	0.00	0.00	0.00	0.00	0.00	0.00

Average Daily	—	—	—	—	—	—	—	—	—	—	—	—	—	—	—	—	—	—
Worker	< 0.005	< 0.005	< 0.005	0.02	0.00	0.00	< 0.005	< 0.005	0.00	< 0.005	< 0.005	—	4.03	4.03	< 0.005	< 0.005	0.01	4.09
Vendor	0.00	0.00	0.00	0.00	0.00	0.00	0.00	0.00	0.00	0.00	0.00	—	0.00	0.00	0.00	0.00	0.00	0.00
Hauling	0.00	0.00	0.00	0.00	0.00	0.00	0.00	0.00	0.00	0.00	0.00	—	0.00	0.00	0.00	0.00	0.00	0.00
Annual	—	—	—	—	—	—	—	—	—	—	—	—	—	—	—	—	—	—
Worker	< 0.005	< 0.005	< 0.005	< 0.005	0.00	0.00	< 0.005	< 0.005	0.00	< 0.005	< 0.005	—	0.67	0.67	< 0.005	< 0.005	< 0.005	0.68
Vendor	0.00	0.00	0.00	0.00	0.00	0.00	0.00	0.00	0.00	0.00	0.00	—	0.00	0.00	0.00	0.00	0.00	0.00
Hauling	0.00	0.00	0.00	0.00	0.00	0.00	0.00	0.00	0.00	0.00	0.00	—	0.00	0.00	0.00	0.00	0.00	0.00

3.5. Site Prep (2026) - Unmitigated

Criteria Pollutants (lb/day for daily, ton/yr for annual) and GHGs (lb/day for daily, MT/yr for annual)

Location	TOG	ROG	NOx	CO	SO2	PM10E	PM10D	PM10T	PM2.5E	PM2.5D	PM2.5T	BCO2	NBCO2	CO2T	CH4	N2O	R	CO2e
Onsite	—	—	—	—	—	—	—	—	—	—	—	—	—	—	—	—	—	—
Daily, Summer (Max)	—	—	—	—	—	—	—	—	—	—	—	—	—	—	—	—	—	—
Daily, Winter (Max)	—	—	—	—	—	—	—	—	—	—	—	—	—	—	—	—	—	—
Off-Road Equipment	0.36	0.30	2.36	5.04	0.01	0.10	—	0.10	0.10	—	0.10	—	792	792	0.03	0.01	—	794
Dust From Material Movement	—	—	—	—	—	—	0.00	0.00	—	0.00	0.00	—	—	—	—	—	—	—
Onsite truck	0.00	0.00	0.00	0.00	0.00	0.00	0.00	0.00	0.00	0.00	0.00	—	0.00	0.00	0.00	0.00	0.00	0.00
Average Daily	—	—	—	—	—	—	—	—	—	—	—	—	—	—	—	—	—	—
Off-Road Equipment	0.02	0.02	0.14	0.31	< 0.005	0.01	—	0.01	0.01	—	0.01	—	48.0	48.0	< 0.005	< 0.005	—	48.2

Dust From Material Movement	—	—	—	—	—	—	0.00	0.00	—	0.00	0.00	—	—	—	—	—	—	—
Onsite truck	0.00	0.00	0.00	0.00	0.00	0.00	0.00	0.00	0.00	0.00	0.00	—	0.00	0.00	0.00	0.00	0.00	0.00
Annual	—	—	—	—	—	—	—	—	—	—	—	—	—	—	—	—	—	—
Off-Road Equipment	< 0.005	< 0.005	0.03	0.06	< 0.005	< 0.005	—	< 0.005	< 0.005	—	< 0.005	—	7.95	7.95	< 0.005	< 0.005	—	7.98
Dust From Material Movement	—	—	—	—	—	—	0.00	0.00	—	0.00	0.00	—	—	—	—	—	—	—
Onsite truck	0.00	0.00	0.00	0.00	0.00	0.00	0.00	0.00	0.00	0.00	0.00	—	0.00	0.00	0.00	0.00	0.00	0.00
Offsite	—	—	—	—	—	—	—	—	—	—	—	—	—	—	—	—	—	—
Daily, Summer (Max)	—	—	—	—	—	—	—	—	—	—	—	—	—	—	—	—	—	—
Daily, Winter (Max)	—	—	—	—	—	—	—	—	—	—	—	—	—	—	—	—	—	—
Worker	0.02	0.02	0.02	0.28	0.00	0.00	0.07	0.07	0.00	0.02	0.02	—	64.2	64.2	< 0.005	< 0.005	0.01	65.0
Vendor	0.00	0.00	0.00	0.00	0.00	0.00	0.00	0.00	0.00	0.00	0.00	—	0.00	0.00	0.00	0.00	0.00	0.00
Hauling	0.00	0.00	0.00	0.00	0.00	0.00	0.00	0.00	0.00	0.00	0.00	—	0.00	0.00	0.00	0.00	0.00	0.00
Average Daily	—	—	—	—	—	—	—	—	—	—	—	—	—	—	—	—	—	—
Worker	< 0.005	< 0.005	< 0.005	0.02	0.00	0.00	< 0.005	< 0.005	0.00	< 0.005	< 0.005	—	3.95	3.95	< 0.005	< 0.005	0.01	4.01
Vendor	0.00	0.00	0.00	0.00	0.00	0.00	0.00	0.00	0.00	0.00	0.00	—	0.00	0.00	0.00	0.00	0.00	0.00
Hauling	0.00	0.00	0.00	0.00	0.00	0.00	0.00	0.00	0.00	0.00	0.00	—	0.00	0.00	0.00	0.00	0.00	0.00
Annual	—	—	—	—	—	—	—	—	—	—	—	—	—	—	—	—	—	—
Worker	< 0.005	< 0.005	< 0.005	< 0.005	0.00	0.00	< 0.005	< 0.005	0.00	< 0.005	< 0.005	—	0.65	0.65	< 0.005	< 0.005	< 0.005	0.66
Vendor	0.00	0.00	0.00	0.00	0.00	0.00	0.00	0.00	0.00	0.00	0.00	—	0.00	0.00	0.00	0.00	0.00	0.00

Hauling	0.00	0.00	0.00	0.00	0.00	0.00	0.00	0.00	0.00	0.00	0.00	—	0.00	0.00	0.00	0.00	0.00	0.00

3.6. Site Prep (2026) - Mitigated

Criteria Pollutants (lb/day for daily, ton/yr for annual) and GHGs (lb/day for daily, MT/yr for annual)

Location	TOG	ROG	NOx	CO	SO2	PM10E	PM10D	PM10T	PM2.5E	PM2.5D	PM2.5T	BCO2	NBCO2	CO2T	CH4	N2O	R	CO2e
Onsite	—	—	—	—	—	—	—	—	—	—	—	—	—	—	—	—	—	—
Daily, Summer (Max)	—	—	—	—	—	—	—	—	—	—	—	—	—	—	—	—	—	—
Daily, Winter (Max)	—	—	—	—	—	—	—	—	—	—	—	—	—	—	—	—	—	—
Off-Road Equipment	0.08	0.08	0.39	5.55	0.01	0.02	—	0.02	0.02	—	0.02	—	792	792	0.03	0.01	—	794
Dust From Material Movement	—	—	—	—	—	—	0.00	0.00	—	0.00	0.00	—	—	—	—	—	—	—
Onsite truck	0.00	0.00	0.00	0.00	0.00	0.00	0.00	0.00	0.00	0.00	0.00	—	0.00	0.00	0.00	0.00	0.00	0.00
Average Daily	—	—	—	—	—	—	—	—	—	—	—	—	—	—	—	—	—	—
Off-Road Equipment	< 0.005	< 0.005	0.02	0.34	< 0.005	< 0.005	—	< 0.005	< 0.005	—	< 0.005	—	48.0	48.0	< 0.005	< 0.005	—	48.2
Dust From Material Movement	—	—	—	—	—	—	0.00	0.00	—	0.00	0.00	—	—	—	—	—	—	—
Onsite truck	0.00	0.00	0.00	0.00	0.00	0.00	0.00	0.00	0.00	0.00	0.00	—	0.00	0.00	0.00	0.00	0.00	0.00
Annual	—	—	—	—	—	—	—	—	—	—	—	—	—	—	—	—	—	—
Off-Road Equipment	< 0.005	< 0.005	< 0.005	0.06	< 0.005	< 0.005	—	< 0.005	< 0.005	—	< 0.005	—	7.95	7.95	< 0.005	< 0.005	—	7.98

Dust From Material Movement	—	—	—	—	—	—	0.00	0.00	—	0.00	0.00	—	—	—	—	—	—	—
Onsite truck	0.00	0.00	0.00	0.00	0.00	0.00	0.00	0.00	0.00	0.00	0.00	—	0.00	0.00	0.00	0.00	0.00	0.00
Offsite	—	—	—	—	—	—	—	—	—	—	—	—	—	—	—	—	—	—
Daily, Summer (Max)	—	—	—	—	—	—	—	—	—	—	—	—	—	—	—	—	—	—
Daily, Winter (Max)	—	—	—	—	—	—	—	—	—	—	—	—	—	—	—	—	—	—
Worker	0.02	0.02	0.02	0.28	0.00	0.00	0.07	0.07	0.00	0.02	0.02	—	64.2	64.2	< 0.005	< 0.005	0.01	65.0
Vendor	0.00	0.00	0.00	0.00	0.00	0.00	0.00	0.00	0.00	0.00	0.00	—	0.00	0.00	0.00	0.00	0.00	0.00
Hauling	0.00	0.00	0.00	0.00	0.00	0.00	0.00	0.00	0.00	0.00	0.00	—	0.00	0.00	0.00	0.00	0.00	0.00
Average Daily	—	—	—	—	—	—	—	—	—	—	—	—	—	—	—	—	—	—
Worker	< 0.005	< 0.005	< 0.005	0.02	0.00	0.00	< 0.005	< 0.005	0.00	< 0.005	< 0.005	—	3.95	3.95	< 0.005	< 0.005	0.01	4.01
Vendor	0.00	0.00	0.00	0.00	0.00	0.00	0.00	0.00	0.00	0.00	0.00	—	0.00	0.00	0.00	0.00	0.00	0.00
Hauling	0.00	0.00	0.00	0.00	0.00	0.00	0.00	0.00	0.00	0.00	0.00	—	0.00	0.00	0.00	0.00	0.00	0.00
Annual	—	—	—	—	—	—	—	—	—	—	—	—	—	—	—	—	—	—
Worker	< 0.005	< 0.005	< 0.005	< 0.005	0.00	0.00	< 0.005	< 0.005	0.00	< 0.005	< 0.005	—	0.65	0.65	< 0.005	< 0.005	< 0.005	0.66
Vendor	0.00	0.00	0.00	0.00	0.00	0.00	0.00	0.00	0.00	0.00	0.00	—	0.00	0.00	0.00	0.00	0.00	0.00
Hauling	0.00	0.00	0.00	0.00	0.00	0.00	0.00	0.00	0.00	0.00	0.00	—	0.00	0.00	0.00	0.00	0.00	0.00

3.7. Grading (2026) - Unmitigated

Criteria Pollutants (lb/day for daily, ton/yr for annual) and GHGs (lb/day for daily, MT/yr for annual)

Location	TOG	ROG	NOx	CO	SO2	PM10E	PM10D	PM10T	PM2.5E	PM2.5D	PM2.5T	BCO2	NBCO2	CO2T	CH4	N2O	R	CO2e
Onsite	—	—	—	—	—	—	—	—	—	—	—	—	—	—	—	—	—	—

Daily, Summer (Max)	—	—	—	—	—	—	—	—	—	—	—	—	—	—	—	—	—	—
Off-Road Equipment	0.07	0.06	0.84	1.50	< 0.005	0.02	—	0.02	0.02	—	0.02	—	245	245	0.01	< 0.005	—	246
Dust From Material Movement	—	—	—	—	—	—	0.00	0.00	—	0.00	0.00	—	—	—	—	—	—	—
Onsite truck	0.00	0.00	0.00	0.00	0.00	0.00	0.00	0.00	0.00	0.00	0.00	—	0.00	0.00	0.00	0.00	0.00	0.00
Daily, Winter (Max)	—	—	—	—	—	—	—	—	—	—	—	—	—	—	—	—	—	—
Off-Road Equipment	0.07	0.06	0.84	1.50	< 0.005	0.02	—	0.02	0.02	—	0.02	—	245	245	0.01	< 0.005	—	246
Dust From Material Movement	—	—	—	—	—	—	0.00	0.00	—	0.00	0.00	—	—	—	—	—	—	—
Onsite truck	0.00	0.00	0.00	0.00	0.00	0.00	0.00	0.00	0.00	0.00	0.00	—	0.00	0.00	0.00	0.00	0.00	0.00
Average Daily	—	—	—	—	—	—	—	—	—	—	—	—	—	—	—	—	—	—
Off-Road Equipment	0.01	0.01	0.15	0.26	< 0.005	< 0.005	—	< 0.005	< 0.005	—	< 0.005	—	42.9	42.9	< 0.005	< 0.005	—	43.1
Dust From Material Movement	—	—	—	—	—	—	0.00	0.00	—	0.00	0.00	—	—	—	—	—	—	—
Onsite truck	0.00	0.00	0.00	0.00	0.00	0.00	0.00	0.00	0.00	0.00	0.00	—	0.00	0.00	0.00	0.00	0.00	0.00
Annual	—	—	—	—	—	—	—	—	—	—	—	—	—	—	—	—	—	—
Off-Road Equipment	< 0.005	< 0.005	0.03	0.05	< 0.005	< 0.005	—	< 0.005	< 0.005	—	< 0.005	—	7.11	7.11	< 0.005	< 0.005	—	7.13

Dust From Material Movement	—	—	—	—	—	—	0.00	0.00	—	0.00	0.00	—	—	—	—	—	—	—
Onsite truck	0.00	0.00	0.00	0.00	0.00	0.00	0.00	0.00	0.00	0.00	0.00	—	0.00	0.00	0.00	0.00	0.00	0.00
Offsite	—	—	—	—	—	—	—	—	—	—	—	—	—	—	—	—	—	—
Daily, Summer (Max)	—	—	—	—	—	—	—	—	—	—	—	—	—	—	—	—	—	—
Worker	0.01	0.01	0.01	0.16	0.00	0.00	0.03	0.03	0.00	0.01	0.01	—	33.9	33.9	< 0.005	< 0.005	0.11	34.4
Vendor	0.00	0.00	0.00	0.00	0.00	0.00	0.00	0.00	0.00	0.00	0.00	—	0.00	0.00	0.00	0.00	0.00	0.00
Hauling	0.00	0.00	0.00	0.00	0.00	0.00	0.00	0.00	0.00	0.00	0.00	—	0.00	0.00	0.00	0.00	0.00	0.00
Daily, Winter (Max)	—	—	—	—	—	—	—	—	—	—	—	—	—	—	—	—	—	—
Worker	0.01	0.01	0.01	0.14	0.00	0.00	0.03	0.03	0.00	0.01	0.01	—	32.1	32.1	< 0.005	< 0.005	< 0.005	32.5
Vendor	0.00	0.00	0.00	0.00	0.00	0.00	0.00	0.00	0.00	0.00	0.00	—	0.00	0.00	0.00	0.00	0.00	0.00
Hauling	0.00	0.00	0.00	0.00	0.00	0.00	0.00	0.00	0.00	0.00	0.00	—	0.00	0.00	0.00	0.00	0.00	0.00
Average Daily	—	—	—	—	—	—	—	—	—	—	—	—	—	—	—	—	—	—
Worker	< 0.005	< 0.005	< 0.005	0.03	0.00	0.00	0.01	0.01	0.00	< 0.005	< 0.005	—	5.71	5.71	< 0.005	< 0.005	0.01	5.79
Vendor	0.00	0.00	0.00	0.00	0.00	0.00	0.00	0.00	0.00	0.00	0.00	—	0.00	0.00	0.00	0.00	0.00	0.00
Hauling	0.00	0.00	0.00	0.00	0.00	0.00	0.00	0.00	0.00	0.00	0.00	—	0.00	0.00	0.00	0.00	0.00	0.00
Annual	—	—	—	—	—	—	—	—	—	—	—	—	—	—	—	—	—	—
Worker	< 0.005	< 0.005	< 0.005	< 0.005	0.00	0.00	< 0.005	< 0.005	0.00	< 0.005	< 0.005	—	0.95	0.95	< 0.005	< 0.005	< 0.005	0.96
Vendor	0.00	0.00	0.00	0.00	0.00	0.00	0.00	0.00	0.00	0.00	0.00	—	0.00	0.00	0.00	0.00	0.00	0.00
Hauling	0.00	0.00	0.00	0.00	0.00	0.00	0.00	0.00	0.00	0.00	0.00	—	0.00	0.00	0.00	0.00	0.00	0.00

3.8. Grading (2026) - Mitigated

Criteria Pollutants (lb/day for daily, ton/yr for annual) and GHGs (lb/day for daily, MT/yr for annual)

Location	TOG	ROG	NOx	CO	SO2	PM10E	PM10D	PM10T	PM2.5E	PM2.5D	PM2.5T	BCO2	NBCO2	CO2T	CH4	N2O	R	CO2e
Onsite	—	—	—	—	—	—	—	—	—	—	—	—	—	—	—	—	—	—
Daily, Summer (Max)	—	—	—	—	—	—	—	—	—	—	—	—	—	—	—	—	—	—
Off-Road Equipment	0.04	0.04	1.27	1.71	< 0.005	< 0.005	—	< 0.005	< 0.005	—	< 0.005	—	245	245	0.01	< 0.005	—	246
Dust From Material Movement	—	—	—	—	—	—	0.00	0.00	—	0.00	0.00	—	—	—	—	—	—	—
Onsite truck	0.00	0.00	0.00	0.00	0.00	0.00	0.00	0.00	0.00	0.00	0.00	—	0.00	0.00	0.00	0.00	0.00	0.00
Daily, Winter (Max)	—	—	—	—	—	—	—	—	—	—	—	—	—	—	—	—	—	—
Off-Road Equipment	0.04	0.04	1.27	1.71	< 0.005	< 0.005	—	< 0.005	< 0.005	—	< 0.005	—	245	245	0.01	< 0.005	—	246
Dust From Material Movement	—	—	—	—	—	—	0.00	0.00	—	0.00	0.00	—	—	—	—	—	—	—
Onsite truck	0.00	0.00	0.00	0.00	0.00	0.00	0.00	0.00	0.00	0.00	0.00	—	0.00	0.00	0.00	0.00	0.00	0.00
Average Daily	—	—	—	—	—	—	—	—	—	—	—	—	—	—	—	—	—	—
Off-Road Equipment	0.01	0.01	0.22	0.30	< 0.005	< 0.005	—	< 0.005	< 0.005	—	< 0.005	—	42.9	42.9	< 0.005	< 0.005	—	43.1
Dust From Material Movement	—	—	—	—	—	—	0.00	0.00	—	0.00	0.00	—	—	—	—	—	—	—
Onsite truck	0.00	0.00	0.00	0.00	0.00	0.00	0.00	0.00	0.00	0.00	0.00	—	0.00	0.00	0.00	0.00	0.00	0.00

Annual	—	—	—	—	—	—	—	—	—	—	—	—	—	—	—	—	—	—
Off-Road Equipment	< 0.005	< 0.005	0.04	0.05	< 0.005	< 0.005	—	< 0.005	< 0.005	—	< 0.005	—	7.11	7.11	< 0.005	< 0.005	—	7.13
Dust From Material Movement	—	—	—	—	—	—	0.00	0.00	—	0.00	0.00	—	—	—	—	—	—	—
Onsite truck	0.00	0.00	0.00	0.00	0.00	0.00	0.00	0.00	0.00	0.00	0.00	—	0.00	0.00	0.00	0.00	0.00	0.00
Offsite	—	—	—	—	—	—	—	—	—	—	—	—	—	—	—	—	—	—
Daily, Summer (Max)	—	—	—	—	—	—	—	—	—	—	—	—	—	—	—	—	—	—
Worker	0.01	0.01	0.01	0.16	0.00	0.00	0.03	0.03	0.00	0.01	0.01	—	33.9	33.9	< 0.005	< 0.005	0.11	34.4
Vendor	0.00	0.00	0.00	0.00	0.00	0.00	0.00	0.00	0.00	0.00	0.00	—	0.00	0.00	0.00	0.00	0.00	0.00
Hauling	0.00	0.00	0.00	0.00	0.00	0.00	0.00	0.00	0.00	0.00	0.00	—	0.00	0.00	0.00	0.00	0.00	0.00
Daily, Winter (Max)	—	—	—	—	—	—	—	—	—	—	—	—	—	—	—	—	—	—
Worker	0.01	0.01	0.01	0.14	0.00	0.00	0.03	0.03	0.00	0.01	0.01	—	32.1	32.1	< 0.005	< 0.005	< 0.005	32.5
Vendor	0.00	0.00	0.00	0.00	0.00	0.00	0.00	0.00	0.00	0.00	0.00	—	0.00	0.00	0.00	0.00	0.00	0.00
Hauling	0.00	0.00	0.00	0.00	0.00	0.00	0.00	0.00	0.00	0.00	0.00	—	0.00	0.00	0.00	0.00	0.00	0.00
Average Daily	—	—	—	—	—	—	—	—	—	—	—	—	—	—	—	—	—	—
Worker	< 0.005	< 0.005	< 0.005	0.03	0.00	0.00	0.01	0.01	0.00	< 0.005	< 0.005	—	5.71	5.71	< 0.005	< 0.005	0.01	5.79
Vendor	0.00	0.00	0.00	0.00	0.00	0.00	0.00	0.00	0.00	0.00	0.00	—	0.00	0.00	0.00	0.00	0.00	0.00
Hauling	0.00	0.00	0.00	0.00	0.00	0.00	0.00	0.00	0.00	0.00	0.00	—	0.00	0.00	0.00	0.00	0.00	0.00
Annual	—	—	—	—	—	—	—	—	—	—	—	—	—	—	—	—	—	—
Worker	< 0.005	< 0.005	< 0.005	< 0.005	0.00	0.00	< 0.005	< 0.005	0.00	< 0.005	< 0.005	—	0.95	0.95	< 0.005	< 0.005	< 0.005	0.96
Vendor	0.00	0.00	0.00	0.00	0.00	0.00	0.00	0.00	0.00	0.00	0.00	—	0.00	0.00	0.00	0.00	0.00	0.00
Hauling	0.00	0.00	0.00	0.00	0.00	0.00	0.00	0.00	0.00	0.00	0.00	—	0.00	0.00	0.00	0.00	0.00	0.00

3.9. Infrastructure Installation (2026) - Unmitigated

Criteria Pollutants (lb/day for daily, ton/yr for annual) and GHGs (lb/day for daily, MT/yr for annual)

Location	TOG	ROG	NOx	CO	SO2	PM10E	PM10D	PM10T	PM2.5E	PM2.5D	PM2.5T	BCO2	NBCO2	CO2T	CH4	N2O	R	CO2e
Onsite	—	—	—	—	—	—	—	—	—	—	—	—	—	—	—	—	—	—
Daily, Summer (Max)	—	—	—	—	—	—	—	—	—	—	—	—	—	—	—	—	—	—
Off-Road Equipment	1.36	1.14	10.2	10.2	0.02	0.34	—	0.34	0.31	—	0.31	—	2,105	2,105	0.09	0.02	—	2,113
Onsite truck	0.00	0.00	0.00	0.00	0.00	0.00	0.00	0.00	0.00	0.00	0.00	—	0.00	0.00	0.00	0.00	0.00	0.00
Daily, Winter (Max)	—	—	—	—	—	—	—	—	—	—	—	—	—	—	—	—	—	—
Off-Road Equipment	1.36	1.14	10.2	10.2	0.02	0.34	—	0.34	0.31	—	0.31	—	2,105	2,105	0.09	0.02	—	2,113
Onsite truck	0.00	0.00	0.00	0.00	0.00	0.00	0.00	0.00	0.00	0.00	0.00	—	0.00	0.00	0.00	0.00	0.00	0.00
Average Daily	—	—	—	—	—	—	—	—	—	—	—	—	—	—	—	—	—	—
Off-Road Equipment	0.65	0.54	4.90	4.91	0.01	0.16	—	0.16	0.15	—	0.15	—	1,009	1,009	0.04	0.01	—	1,013
Onsite truck	0.00	0.00	0.00	0.00	0.00	0.00	0.00	0.00	0.00	0.00	0.00	—	0.00	0.00	0.00	0.00	0.00	0.00
Annual	—	—	—	—	—	—	—	—	—	—	—	—	—	—	—	—	—	—
Off-Road Equipment	0.12	0.10	0.89	0.90	< 0.005	0.03	—	0.03	0.03	—	0.03	—	167	167	0.01	< 0.005	—	168
Onsite truck	0.00	0.00	0.00	0.00	0.00	0.00	0.00	0.00	0.00	0.00	0.00	—	0.00	0.00	0.00	0.00	0.00	0.00
Offsite	—	—	—	—	—	—	—	—	—	—	—	—	—	—	—	—	—	—

Daily, Summer (Max)	—	—	—	—	—	—	—	—	—	—	—	—	—	—	—	—	—	—
Worker	0.42	0.37	0.39	6.46	0.00	0.00	1.31	1.31	0.00	0.31	0.31	—	1,355	1,355	0.06	0.05	4.58	1,375
Vendor	0.00	0.00	0.00	0.00	0.00	0.00	0.00	0.00	0.00	0.00	0.00	—	0.00	0.00	0.00	0.00	0.00	0.00
Hauling	0.03	0.01	0.49	0.19	< 0.005	0.01	0.11	0.12	0.01	0.03	0.04	—	408	408	0.02	0.07	0.92	429
Daily, Winter (Max)	—	—	—	—	—	—	—	—	—	—	—	—	—	—	—	—	—	—
Worker	0.42	0.37	0.44	5.51	0.00	0.00	1.31	1.31	0.00	0.31	0.31	—	1,284	1,284	0.06	0.05	0.12	1,300
Vendor	0.00	0.00	0.00	0.00	0.00	0.00	0.00	0.00	0.00	0.00	0.00	—	0.00	0.00	0.00	0.00	0.00	0.00
Hauling	0.03	0.01	0.51	0.20	< 0.005	0.01	0.11	0.12	0.01	0.03	0.04	—	408	408	0.02	0.07	0.02	428
Average Daily	—	—	—	—	—	—	—	—	—	—	—	—	—	—	—	—	—	—
Worker	0.20	0.17	0.23	2.77	0.00	0.00	0.62	0.62	0.00	0.15	0.15	—	625	625	0.03	0.02	0.95	633
Vendor	0.00	0.00	0.00	0.00	0.00	0.00	0.00	0.00	0.00	0.00	0.00	—	0.00	0.00	0.00	0.00	0.00	0.00
Hauling	0.01	< 0.005	0.25	0.09	< 0.005	< 0.005	0.05	0.06	< 0.005	0.01	0.02	—	196	196	0.01	0.03	0.19	205
Annual	—	—	—	—	—	—	—	—	—	—	—	—	—	—	—	—	—	—
Worker	0.04	0.03	0.04	0.50	0.00	0.00	0.11	0.11	0.00	0.03	0.03	—	103	103	< 0.005	< 0.005	0.16	105
Vendor	0.00	0.00	0.00	0.00	0.00	0.00	0.00	0.00	0.00	0.00	0.00	—	0.00	0.00	0.00	0.00	0.00	0.00
Hauling	< 0.005	< 0.005	0.05	0.02	< 0.005	< 0.005	0.01	0.01	< 0.005	< 0.005	< 0.005	—	32.4	32.4	< 0.005	0.01	0.03	34.0

3.10. Infrastructure Installation (2026) - Mitigated

Criteria Pollutants (lb/day for daily, ton/yr for annual) and GHGs (lb/day for daily, MT/yr for annual)

Location	TOG	ROG	NOx	CO	SO2	PM10E	PM10D	PM10T	PM2.5E	PM2.5D	PM2.5T	BCO2	NBCO2	CO2T	CH4	N2O	R	CO2e
Onsite	—	—	—	—	—	—	—	—	—	—	—	—	—	—	—	—	—	—
Daily, Summer (Max)	—	—	—	—	—	—	—	—	—	—	—	—	—	—	—	—	—	—

Off-Road Equipment	0.21	0.21	3.67	10.6	0.02	0.03	—	0.03	0.03	—	0.03	—	1,794	1,794	0.07	0.01	—	1,800
Onsite truck	0.00	0.00	0.00	0.00	0.00	0.00	0.00	0.00	0.00	0.00	0.00	—	0.00	0.00	0.00	0.00	0.00	0.00
Daily, Winter (Max)	—	—	—	—	—	—	—	—	—	—	—	—	—	—	—	—	—	—
Off-Road Equipment	0.21	0.21	3.67	10.6	0.02	0.03	—	0.03	0.03	—	0.03	—	1,794	1,794	0.07	0.01	—	1,800
Onsite truck	0.00	0.00	0.00	0.00	0.00	0.00	0.00	0.00	0.00	0.00	0.00	—	0.00	0.00	0.00	0.00	0.00	0.00
Average Daily	—	—	—	—	—	—	—	—	—	—	—	—	—	—	—	—	—	—
Off-Road Equipment	0.10	0.10	1.76	5.07	0.01	0.02	—	0.02	0.02	—	0.02	—	860	860	0.03	0.01	—	863
Onsite truck	0.00	0.00	0.00	0.00	0.00	0.00	0.00	0.00	0.00	0.00	0.00	—	0.00	0.00	0.00	0.00	0.00	0.00
Annual	—	—	—	—	—	—	—	—	—	—	—	—	—	—	—	—	—	—
Off-Road Equipment	0.02	0.02	0.32	0.93	< 0.005	< 0.005	—	< 0.005	< 0.005	—	< 0.005	—	142	142	0.01	< 0.005	—	143
Onsite truck	0.00	0.00	0.00	0.00	0.00	0.00	0.00	0.00	0.00	0.00	0.00	—	0.00	0.00	0.00	0.00	0.00	0.00
Offsite	—	—	—	—	—	—	—	—	—	—	—	—	—	—	—	—	—	—
Daily, Summer (Max)	—	—	—	—	—	—	—	—	—	—	—	—	—	—	—	—	—	—
Worker	0.42	0.37	0.39	6.46	0.00	0.00	1.31	1.31	0.00	0.31	0.31	—	1,355	1,355	0.06	0.05	4.58	1,375
Vendor	0.00	0.00	0.00	0.00	0.00	0.00	0.00	0.00	0.00	0.00	0.00	—	0.00	0.00	0.00	0.00	0.00	0.00
Hauling	0.03	0.01	0.49	0.19	< 0.005	0.01	0.11	0.12	0.01	0.03	0.04	—	408	408	0.02	0.07	0.92	429
Daily, Winter (Max)	—	—	—	—	—	—	—	—	—	—	—	—	—	—	—	—	—	—
Worker	0.42	0.37	0.44	5.51	0.00	0.00	1.31	1.31	0.00	0.31	0.31	—	1,284	1,284	0.06	0.05	0.12	1,300

Vendor	0.00	0.00	0.00	0.00	0.00	0.00	0.00	0.00	0.00	0.00	0.00	—	0.00	0.00	0.00	0.00	0.00	0.00
Hauling	0.03	0.01	0.51	0.20	< 0.005	0.01	0.11	0.12	0.01	0.03	0.04	—	408	408	0.02	0.07	0.02	428
Average Daily	—	—	—	—	—	—	—	—	—	—	—	—	—	—	—	—	—	—
Worker	0.20	0.17	0.23	2.77	0.00	0.00	0.62	0.62	0.00	0.15	0.15	—	625	625	0.03	0.02	0.95	633
Vendor	0.00	0.00	0.00	0.00	0.00	0.00	0.00	0.00	0.00	0.00	0.00	—	0.00	0.00	0.00	0.00	0.00	0.00
Hauling	0.01	< 0.005	0.25	0.09	< 0.005	< 0.005	0.05	0.06	< 0.005	0.01	0.02	—	196	196	0.01	0.03	0.19	205
Annual	—	—	—	—	—	—	—	—	—	—	—	—	—	—	—	—	—	—
Worker	0.04	0.03	0.04	0.50	0.00	0.00	0.11	0.11	0.00	0.03	0.03	—	103	103	< 0.005	< 0.005	0.16	105
Vendor	0.00	0.00	0.00	0.00	0.00	0.00	0.00	0.00	0.00	0.00	0.00	—	0.00	0.00	0.00	0.00	0.00	0.00
Hauling	< 0.005	< 0.005	0.05	0.02	< 0.005	< 0.005	0.01	0.01	< 0.005	< 0.005	< 0.005	—	32.4	32.4	< 0.005	0.01	0.03	34.0

3.11. Paving/Site Restoration (2027) - Unmitigated

Criteria Pollutants (lb/day for daily, ton/yr for annual) and GHGs (lb/day for daily, MT/yr for annual)

Location	TOG	ROG	NOx	CO	SO2	PM10E	PM10D	PM10T	PM2.5E	PM2.5D	PM2.5T	BCO2	NBCO2	CO2T	CH4	N2O	R	CO2e
Onsite	—	—	—	—	—	—	—	—	—	—	—	—	—	—	—	—	—	—
Daily, Summer (Max)	—	—	—	—	—	—	—	—	—	—	—	—	—	—	—	—	—	—
Daily, Winter (Max)	—	—	—	—	—	—	—	—	—	—	—	—	—	—	—	—	—	—
Off-Road Equipment	2.56	2.15	17.3	16.4	0.02	1.03	—	1.03	0.95	—	0.95	—	2,208	2,208	0.09	0.02	—	2,215
Paving	—	0.00	—	—	—	—	—	—	—	—	—	—	—	—	—	—	—	—
Onsite truck	0.00	0.00	0.00	0.00	0.00	0.00	0.00	0.00	0.00	0.00	0.00	—	0.00	0.00	0.00	0.00	0.00	0.00
Average Daily	—	—	—	—	—	—	—	—	—	—	—	—	—	—	—	—	—	—

Off-Road Equipment	0.45	0.38	3.03	2.88	< 0.005	0.18	—	0.18	0.17	—	0.17	—	387	387	0.02	< 0.005	—	388
Paving	—	0.00	—	—	—	—	—	—	—	—	—	—	—	—	—	—	—	—
Onsite truck	0.00	0.00	0.00	0.00	0.00	0.00	0.00	0.00	0.00	0.00	0.00	—	0.00	0.00	0.00	0.00	0.00	0.00
Annual	—	—	—	—	—	—	—	—	—	—	—	—	—	—	—	—	—	—
Off-Road Equipment	0.08	0.07	0.55	0.53	< 0.005	0.03	—	0.03	0.03	—	0.03	—	64.1	64.1	< 0.005	< 0.005	—	64.3
Paving	—	0.00	—	—	—	—	—	—	—	—	—	—	—	—	—	—	—	—
Onsite truck	0.00	0.00	0.00	0.00	0.00	0.00	0.00	0.00	0.00	0.00	0.00	—	0.00	0.00	0.00	0.00	0.00	0.00
Offsite	—	—	—	—	—	—	—	—	—	—	—	—	—	—	—	—	—	—
Daily, Summer (Max)	—	—	—	—	—	—	—	—	—	—	—	—	—	—	—	—	—	—
Daily, Winter (Max)	—	—	—	—	—	—	—	—	—	—	—	—	—	—	—	—	—	—
Worker	0.07	0.06	0.08	0.89	0.00	0.00	0.23	0.23	0.00	0.05	0.05	—	220	220	< 0.005	0.01	0.02	223
Vendor	0.00	0.00	0.00	0.00	0.00	0.00	0.00	0.00	0.00	0.00	0.00	—	0.00	0.00	0.00	0.00	0.00	0.00
Hauling	0.00	0.00	0.00	0.00	0.00	0.00	0.00	0.00	0.00	0.00	0.00	—	0.00	0.00	0.00	0.00	0.00	0.00
Average Daily	—	—	—	—	—	—	—	—	—	—	—	—	—	—	—	—	—	—
Worker	0.01	0.01	0.01	0.16	0.00	0.00	0.04	0.04	0.00	0.01	0.01	—	39.2	39.2	< 0.005	< 0.005	0.05	39.7
Vendor	0.00	0.00	0.00	0.00	0.00	0.00	0.00	0.00	0.00	0.00	0.00	—	0.00	0.00	0.00	0.00	0.00	0.00
Hauling	0.00	0.00	0.00	0.00	0.00	0.00	0.00	0.00	0.00	0.00	0.00	—	0.00	0.00	0.00	0.00	0.00	0.00
Annual	—	—	—	—	—	—	—	—	—	—	—	—	—	—	—	—	—	—
Worker	< 0.005	< 0.005	< 0.005	0.03	0.00	0.00	0.01	0.01	0.00	< 0.005	< 0.005	—	6.50	6.50	< 0.005	< 0.005	0.01	6.58
Vendor	0.00	0.00	0.00	0.00	0.00	0.00	0.00	0.00	0.00	0.00	0.00	—	0.00	0.00	0.00	0.00	0.00	0.00
Hauling	0.00	0.00	0.00	0.00	0.00	0.00	0.00	0.00	0.00	0.00	0.00	—	0.00	0.00	0.00	0.00	0.00	0.00

3.12. Paving/Site Restoration (2027) - Mitigated

Criteria Pollutants (lb/day for daily, ton/yr for annual) and GHGs (lb/day for daily, MT/yr for annual)

Location	TOG	ROG	NOx	CO	SO2	PM10E	PM10D	PM10T	PM2.5E	PM2.5D	PM2.5T	BCO2	NBCO2	CO2T	CH4	N2O	R	CO2e
Onsite	—	—	—	—	—	—	—	—	—	—	—	—	—	—	—	—	—	—
Daily, Summer (Max)	—	—	—	—	—	—	—	—	—	—	—	—	—	—	—	—	—	—
Daily, Winter (Max)	—	—	—	—	—	—	—	—	—	—	—	—	—	—	—	—	—	—
Off-Road Equipment	0.27	0.27	4.94	15.3	0.02	0.04	—	0.04	0.04	—	0.04	—	1,967	1,967	0.08	0.02	—	1,974
Paving	—	0.00	—	—	—	—	—	—	—	—	—	—	—	—	—	—	—	—
Onsite truck	0.00	0.00	0.00	0.00	0.00	0.00	0.00	0.00	0.00	0.00	0.00	—	0.00	0.00	0.00	0.00	0.00	0.00
Average Daily	—	—	—	—	—	—	—	—	—	—	—	—	—	—	—	—	—	—
Off-Road Equipment	0.05	0.05	0.87	2.69	< 0.005	0.01	—	0.01	0.01	—	0.01	—	345	345	0.01	< 0.005	—	346
Paving	—	0.00	—	—	—	—	—	—	—	—	—	—	—	—	—	—	—	—
Onsite truck	0.00	0.00	0.00	0.00	0.00	0.00	0.00	0.00	0.00	0.00	0.00	—	0.00	0.00	0.00	0.00	0.00	0.00
Annual	—	—	—	—	—	—	—	—	—	—	—	—	—	—	—	—	—	—
Off-Road Equipment	0.01	0.01	0.16	0.49	< 0.005	< 0.005	—	< 0.005	< 0.005	—	< 0.005	—	57.1	57.1	< 0.005	< 0.005	—	57.3
Paving	—	0.00	—	—	—	—	—	—	—	—	—	—	—	—	—	—	—	—
Onsite truck	0.00	0.00	0.00	0.00	0.00	0.00	0.00	0.00	0.00	0.00	0.00	—	0.00	0.00	0.00	0.00	0.00	0.00
Offsite	—	—	—	—	—	—	—	—	—	—	—	—	—	—	—	—	—	—
Daily, Summer (Max)	—	—	—	—	—	—	—	—	—	—	—	—	—	—	—	—	—	—

Daily, Winter (Max)	—	—	—	—	—	—	—	—	—	—	—	—	—	—	—	—	—	—
Worker	0.07	0.06	0.08	0.89	0.00	0.00	0.23	0.23	0.00	0.05	0.05	—	220	220	< 0.005	0.01	0.02	223
Vendor	0.00	0.00	0.00	0.00	0.00	0.00	0.00	0.00	0.00	0.00	0.00	—	0.00	0.00	0.00	0.00	0.00	0.00
Hauling	0.00	0.00	0.00	0.00	0.00	0.00	0.00	0.00	0.00	0.00	0.00	—	0.00	0.00	0.00	0.00	0.00	0.00
Average Daily	—	—	—	—	—	—	—	—	—	—	—	—	—	—	—	—	—	—
Worker	0.01	0.01	0.01	0.16	0.00	0.00	0.04	0.04	0.00	0.01	0.01	—	39.2	39.2	< 0.005	< 0.005	0.05	39.7
Vendor	0.00	0.00	0.00	0.00	0.00	0.00	0.00	0.00	0.00	0.00	0.00	—	0.00	0.00	0.00	0.00	0.00	0.00
Hauling	0.00	0.00	0.00	0.00	0.00	0.00	0.00	0.00	0.00	0.00	0.00	—	0.00	0.00	0.00	0.00	0.00	0.00
Annual	—	—	—	—	—	—	—	—	—	—	—	—	—	—	—	—	—	—
Worker	< 0.005	< 0.005	< 0.005	0.03	0.00	0.00	0.01	0.01	0.00	< 0.005	< 0.005	—	6.50	6.50	< 0.005	< 0.005	0.01	6.58
Vendor	0.00	0.00	0.00	0.00	0.00	0.00	0.00	0.00	0.00	0.00	0.00	—	0.00	0.00	0.00	0.00	0.00	0.00
Hauling	0.00	0.00	0.00	0.00	0.00	0.00	0.00	0.00	0.00	0.00	0.00	—	0.00	0.00	0.00	0.00	0.00	0.00

5. Activity Data

5.1. Construction Schedule

Phase Name	Phase Type	Start Date	End Date	Days Per Week	Work Days per Phase	Phase Description
Demolition	Demolition	9/1/2025	11/30/2025	5.00	65.0	—
Site Prep	Site Preparation	12/1/2025	1/31/2026	5.00	45.0	—
Grading	Grading	2/1/2026	4/30/2026	5.00	64.0	—
Infrastructure Installation	Building Construction	5/1/2026	12/31/2026	5.00	175	—
Paving/Site Restoration	Paving	1/1/2027	3/31/2027	5.00	64.0	—

5.2. Off-Road Equipment

5.2.1. Unmitigated

Phase Name	Equipment Type	Fuel Type	Engine Tier	Number per Day	Hours Per Day	Horsepower	Load Factor
Demolition	Excavators	Diesel	Average	1.00	8.00	36.0	0.38
Demolition	Rubber Tired Loaders	Diesel	Average	1.00	8.00	150	0.36
Site Prep	Tractors/Loaders/Backhoes	Diesel	Average	1.00	8.00	84.0	0.37
Site Prep	Rubber Tired Loaders	Diesel	Average	1.00	8.00	150	0.36
Grading	Skid Steer Loaders	Diesel	Average	1.00	8.00	71.0	0.37
Infrastructure Installation	Aerial Lifts	Diesel	Average	2.00	8.00	46.0	0.31
Infrastructure Installation	Air Compressors	Diesel	Average	2.00	8.00	37.0	0.48
Infrastructure Installation	Cranes	Diesel	Average	1.00	8.00	367	0.29

Infrastructure Installation	Forklifts	Diesel	Average	1.00	8.00	82.0	0.20
Infrastructure Installation	Generator Sets	Diesel	Average	3.00	8.00	14.0	0.74
Paving/Site Restoration	Rollers	Diesel	Average	2.00	8.00	50.0	0.38
Paving/Site Restoration	Air Compressors	Diesel	Average	1.00	8.00	50.0	0.48
Paving/Site Restoration	Graders	Diesel	Average	1.00	8.00	148	0.41
Paving/Site Restoration	Rubber Tired Loaders	Diesel	Average	1.00	8.00	150	0.36
Paving/Site Restoration	Paving Equipment	Diesel	Average	1.00	8.00	89.0	0.36
Paving/Site Restoration	Skid Steer Loaders	Diesel	Average	1.00	8.00	71.0	0.37

5.2.2. Mitigated

Phase Name	Equipment Type	Fuel Type	Engine Tier	Number per Day	Hours Per Day	Horsepower	Load Factor
Demolition	Excavators	Diesel	Tier 4 Final	1.00	8.00	36.0	0.38
Demolition	Rubber Tired Loaders	Diesel	Tier 4 Final	1.00	8.00	150	0.36
Site Prep	Tractors/Loaders/Backhoes	Diesel	Tier 4 Final	1.00	8.00	84.0	0.37
Site Prep	Rubber Tired Loaders	Diesel	Tier 4 Final	1.00	8.00	150	0.36
Grading	Skid Steer Loaders	Diesel	Tier 4 Final	1.00	8.00	71.0	0.37
Infrastructure Installation	Aerial Lifts	Diesel	Tier 4 Final	2.00	8.00	46.0	0.31
Infrastructure Installation	Air Compressors	Diesel	Tier 4 Final	2.00	8.00	37.0	0.48
Infrastructure Installation	Cranes	Diesel	Tier 4 Final	1.00	8.00	367	0.29
Infrastructure Installation	Forklifts	Diesel	Tier 4 Final	1.00	8.00	82.0	0.20
Infrastructure Installation	Generator Sets	Electric	Average	3.00	8.00	14.0	0.74
Paving/Site Restoration	Rollers	Diesel	Tier 4 Final	2.00	8.00	50.0	0.38
Paving/Site Restoration	Air Compressors	Diesel	Tier 4 Final	1.00	8.00	50.0	0.48
Paving/Site Restoration	Graders	Diesel	Tier 4 Final	1.00	8.00	148	0.41
Paving/Site Restoration	Rubber Tired Loaders	Diesel	Tier 4 Final	1.00	8.00	150	0.36
Paving/Site Restoration	Paving Equipment	Diesel	Tier 4 Final	1.00	8.00	89.0	0.36

Demolition	—	—	—	—
Demolition	Worker	5.00	18.5	LDA,LDT1,LDT2
Demolition	Vendor	0.00	10.2	HHDT,MHDT
Demolition	Hauling	2.00	20.0	HHDT
Demolition	Onsite truck	0.00	—	HHDT

5.4. Vehicles

5.4.1. Construction Vehicle Control Strategies

Non-applicable. No control strategies activated by user.

5.5. Architectural Coatings

Phase Name	Residential Interior Area Coated (sq ft)	Residential Exterior Area Coated (sq ft)	Non-Residential Interior Area Coated (sq ft)	Non-Residential Exterior Area Coated (sq ft)	Parking Area Coated (sq ft)

5.6. Dust Mitigation

5.6.1. Construction Earthmoving Activities

Phase Name	Material Imported (Cubic Yards)	Material Exported (Cubic Yards)	Acres Graded (acres)	Material Demolished (sq. ft.)	Acres Paved (acres)
Demolition	0.00	0.00	0.00	—	—
Site Prep	0.00	0.00	0.00	0.00	—
Grading	0.00	0.00	0.00	0.00	—
Paving/Site Restoration	0.00	0.00	0.00	0.00	0.05

5.6.2. Construction Earthmoving Control Strategies

Control Strategies Applied	Frequency (per day)	PM10 Reduction	PM2.5 Reduction
Water Exposed Area	3	74%	74%
Water Demolished Area	2	36%	36%

5.7. Construction Paving

Land Use	Area Paved (acres)	% Asphalt
Other Non-Asphalt Surfaces	0.05	0%

5.8. Construction Electricity Consumption and Emissions Factors

kWh per Year and Emission Factor (lb/MWh)

Year	kWh per Year	CO2	CH4	N2O
2025	0.00	532	0.03	< 0.005
2026	0.00	532	0.03	< 0.005
2027	0.00	532	0.03	< 0.005

8. User Changes to Default Data

Screen	Justification
Construction: Construction Phases	Project Descriptions
Construction: Off-Road Equipment	Based on project information
Construction: Dust From Material Movement	based on project information
Construction: Paving	No paving phase
Construction: Trips and VMT	based on project information

Surge Tank Telemetry

Garvey - Surge Tank Telemetry Detailed Report

Table of Contents

1. Basic Project Information

1.1. Basic Project Information

1.2. Land Use Types

1.3. User-Selected Emission Reduction Measures by Emissions Sector

2. Emissions Summary

2.1. Construction Emissions Compared Against Thresholds

2.2. Construction Emissions by Year, Unmitigated

2.3. Construction Emissions by Year, Mitigated

3. Construction Emissions Details

3.1. Infrastructure Installation (2025) - Unmitigated

3.2. Infrastructure Installation (2025) - Mitigated

3.3. Paving/Site Restoration (2025) - Unmitigated

3.4. Paving/Site Restoration (2025) - Mitigated

5. Activity Data

5.1. Construction Schedule

5.2. Off-Road Equipment

5.2.1. Unmitigated

5.2.2. Mitigated

5.3. Construction Vehicles

5.3.1. Unmitigated

5.3.2. Mitigated

5.4. Vehicles

5.4.1. Construction Vehicle Control Strategies

5.5. Architectural Coatings

5.6. Dust Mitigation

5.6.1. Construction Earthmoving Activities

5.6.2. Construction Earthmoving Control Strategies

5.7. Construction Paving

5.8. Construction Electricity Consumption and Emissions Factors

8. User Changes to Default Data

1. Basic Project Information

1.1. Basic Project Information

Data Field	Value
Project Name	Garvey - Surge Tank Telemetry
Construction Start Date	9/30/2025
Lead Agency	—
Land Use Scale	Project/site
Analysis Level for Defaults	County
Windspeed (m/s)	0.50
Precipitation (days)	18.2
Location	1061 S Orange Ave, Monterey Park, CA 91755, USA
County	Los Angeles-South Coast
City	Monterey Park
Air District	South Coast AQMD
Air Basin	South Coast
TAZ	4170
EDFZ	7
Electric Utility	Southern California Edison
Gas Utility	Southern California Gas
App Version	2022.1.1.22

1.2. Land Use Types

Land Use Subtype	Size	Unit	Lot Acreage	Building Area (sq ft)	Landscape Area (sq ft)	Special Landscape Area (sq ft)	Population	Description
Other Asphalt Surfaces	0.10	Acre	0.10	0.00	0.00	0.00	—	—

1.3. User-Selected Emission Reduction Measures by Emissions Sector

Sector	#	Measure Title
Construction	C-1-A	Use Electric or Hybrid Powered Equipment
Construction	C-5	Use Advanced Engine Tiers

2. Emissions Summary

2.1. Construction Emissions Compared Against Thresholds

Criteria Pollutants (lb/day for daily, ton/yr for annual) and GHGs (lb/day for daily, MT/yr for annual)

Un/Mit.	TOG	ROG	NOx	CO	SO2	PM10E	PM10D	PM10T	PM2.5E	PM2.5D	PM2.5T	BCO2	NBCO2	CO2T	CH4	N2O	R	CO2e
Daily, Summer (Max)	—	—	—	—	—	—	—	—	—	—	—	—	—	—	—	—	—	—
Unmit.	2.05	1.70	14.1	18.3	0.03	0.54	0.45	0.99	0.50	0.11	0.61	—	3,764	3,764	0.16	0.10	2.28	3,800
Mit.	0.46	0.42	5.23	18.8	0.03	0.06	0.45	0.51	0.06	0.11	0.17	—	3,454	3,454	0.15	0.10	2.28	3,489
% Reduced	78%	75%	63%	-2%	13%	90%	—	49%	89%	—	73%	—	8%	8%	8%	2%	—	8%
Daily, Winter (Max)	—	—	—	—	—	—	—	—	—	—	—	—	—	—	—	—	—	—
Unmit.	2.04	1.69	14.1	18.1	0.03	0.54	0.45	0.99	0.50	0.11	0.61	—	3,745	3,745	0.16	0.10	0.06	3,780
Mit.	0.46	0.42	5.26	18.5	0.03	0.06	0.45	0.51	0.06	0.11	0.17	—	3,435	3,435	0.15	0.10	0.06	3,468
% Reduced	78%	75%	63%	-2%	13%	90%	—	49%	89%	—	73%	—	8%	8%	8%	2%	—	8%
Average Daily (Max)	—	—	—	—	—	—	—	—	—	—	—	—	—	—	—	—	—	—
Unmit.	0.34	0.28	2.32	3.12	0.01	0.09	0.07	0.16	0.09	0.02	0.10	—	597	597	0.03	0.01	0.14	602
Mit.	0.08	0.07	0.90	3.23	< 0.005	0.01	0.07	0.08	0.01	0.02	0.03	—	560	560	0.02	0.01	0.14	565

% Reduced	78%	75%	61%	-3%	—	90%	—	52%	89%	—	75%	—	6%	6%	6%	—	—	6%
Annual (Max)	—	—	—	—	—	—	—	—	—	—	—	—	—	—	—	—	—	—
Unmit.	0.06	0.05	0.42	0.57	< 0.005	0.02	0.01	0.03	0.02	< 0.005	0.02	—	98.9	98.9	< 0.005	< 0.005	0.02	99.7
Mit.	0.01	0.01	0.16	0.59	< 0.005	< 0.005	0.01	0.01	< 0.005	< 0.005	< 0.005	—	92.7	92.7	< 0.005	< 0.005	0.02	93.5
% Reduced	78%	75%	61%	-3%	10%	90%	—	52%	89%	—	75%	—	6%	6%	6%	2%	—	6%

2.2. Construction Emissions by Year, Unmitigated

Criteria Pollutants (lb/day for daily, ton/yr for annual) and GHGs (lb/day for daily, MT/yr for annual)

Year	TOG	ROG	NOx	CO	SO2	PM10E	PM10D	PM10T	PM2.5E	PM2.5D	PM2.5T	BCO2	NBCO2	CO2T	CH4	N2O	R	CO2e
Daily - Summer (Max)	—	—	—	—	—	—	—	—	—	—	—	—	—	—	—	—	—	—
2025	2.05	1.70	14.1	18.3	0.03	0.54	0.45	0.99	0.50	0.11	0.61	—	3,764	3,764	0.16	0.10	2.28	3,800
Daily - Winter (Max)	—	—	—	—	—	—	—	—	—	—	—	—	—	—	—	—	—	—
2025	2.04	1.69	14.1	18.1	0.03	0.54	0.45	0.99	0.50	0.11	0.61	—	3,745	3,745	0.16	0.10	0.06	3,780
Average Daily	—	—	—	—	—	—	—	—	—	—	—	—	—	—	—	—	—	—
2025	0.34	0.28	2.32	3.12	0.01	0.09	0.07	0.16	0.09	0.02	0.10	—	597	597	0.03	0.01	0.14	602
Annual	—	—	—	—	—	—	—	—	—	—	—	—	—	—	—	—	—	—
2025	0.06	0.05	0.42	0.57	< 0.005	0.02	0.01	0.03	0.02	< 0.005	0.02	—	98.9	98.9	< 0.005	< 0.005	0.02	99.7

2.3. Construction Emissions by Year, Mitigated

Criteria Pollutants (lb/day for daily, ton/yr for annual) and GHGs (lb/day for daily, MT/yr for annual)

Year	TOG	ROG	NOx	CO	SO2	PM10E	PM10D	PM10T	PM2.5E	PM2.5D	PM2.5T	BCO2	NBCO2	CO2T	CH4	N2O	R	CO2e

Onsite truck	0.00	0.00	0.00	0.00	0.00	0.00	0.00	0.00	0.00	0.00	0.00	—	0.00	0.00	0.00	0.00	0.00	0.00
Average Daily	—	—	—	—	—	—	—	—	—	—	—	—	—	—	—	—	—	—
Off-Road Equipment	0.23	0.19	1.62	1.97	< 0.005	0.06	—	0.06	0.06	—	0.06	—	360	360	0.01	< 0.005	—	361
Onsite truck	0.00	0.00	0.00	0.00	0.00	0.00	0.00	0.00	0.00	0.00	0.00	—	0.00	0.00	0.00	0.00	0.00	0.00
Annual	—	—	—	—	—	—	—	—	—	—	—	—	—	—	—	—	—	—
Off-Road Equipment	0.04	0.03	0.30	0.36	< 0.005	0.01	—	0.01	0.01	—	0.01	—	59.6	59.6	< 0.005	< 0.005	—	59.8
Onsite truck	0.00	0.00	0.00	0.00	0.00	0.00	0.00	0.00	0.00	0.00	0.00	—	0.00	0.00	0.00	0.00	0.00	0.00
Offsite	—	—	—	—	—	—	—	—	—	—	—	—	—	—	—	—	—	—
Daily, Summer (Max)	—	—	—	—	—	—	—	—	—	—	—	—	—	—	—	—	—	—
Worker	0.12	0.11	0.11	1.81	0.00	0.00	0.34	0.34	0.00	0.08	0.08	—	359	359	0.02	0.01	1.32	365
Vendor	0.00	0.00	0.00	0.00	0.00	0.00	0.00	0.00	0.00	0.00	0.00	—	0.00	0.00	0.00	0.00	0.00	0.00
Hauling	0.03	0.01	0.51	0.20	< 0.005	0.01	0.11	0.12	0.01	0.03	0.04	—	416	416	0.02	0.07	0.96	437
Daily, Winter (Max)	—	—	—	—	—	—	—	—	—	—	—	—	—	—	—	—	—	—
Worker	0.12	0.11	0.12	1.53	0.00	0.00	0.34	0.34	0.00	0.08	0.08	—	341	341	0.02	0.01	0.03	345
Vendor	0.00	0.00	0.00	0.00	0.00	0.00	0.00	0.00	0.00	0.00	0.00	—	0.00	0.00	0.00	0.00	0.00	0.00
Hauling	0.03	0.01	0.53	0.20	< 0.005	0.01	0.11	0.12	0.01	0.03	0.04	—	416	416	0.02	0.07	0.03	436
Average Daily	—	—	—	—	—	—	—	—	—	—	—	—	—	—	—	—	—	—
Worker	0.01	0.01	0.02	0.19	0.00	0.00	0.04	0.04	0.00	0.01	0.01	—	41.7	41.7	< 0.005	< 0.005	0.07	42.2
Vendor	0.00	0.00	0.00	0.00	0.00	0.00	0.00	0.00	0.00	0.00	0.00	—	0.00	0.00	0.00	0.00	0.00	0.00
Hauling	< 0.005	< 0.005	0.06	0.02	< 0.005	< 0.005	0.01	0.01	< 0.005	< 0.005	< 0.005	—	50.1	50.1	< 0.005	0.01	0.05	52.6
Annual	—	—	—	—	—	—	—	—	—	—	—	—	—	—	—	—	—	—

Onsite truck	0.00	0.00	0.00	0.00	0.00	0.00	0.00	0.00	0.00	0.00	0.00	—	0.00	0.00	0.00	0.00	0.00	0.00
Offsite	—	—	—	—	—	—	—	—	—	—	—	—	—	—	—	—	—	—
Daily, Summer (Max)	—	—	—	—	—	—	—	—	—	—	—	—	—	—	—	—	—	—
Worker	0.12	0.11	0.11	1.81	0.00	0.00	0.34	0.34	0.00	0.08	0.08	—	359	359	0.02	0.01	1.32	365
Vendor	0.00	0.00	0.00	0.00	0.00	0.00	0.00	0.00	0.00	0.00	0.00	—	0.00	0.00	0.00	0.00	0.00	0.00
Hauling	0.03	0.01	0.51	0.20	< 0.005	0.01	0.11	0.12	0.01	0.03	0.04	—	416	416	0.02	0.07	0.96	437
Daily, Winter (Max)	—	—	—	—	—	—	—	—	—	—	—	—	—	—	—	—	—	—
Worker	0.12	0.11	0.12	1.53	0.00	0.00	0.34	0.34	0.00	0.08	0.08	—	341	341	0.02	0.01	0.03	345
Vendor	0.00	0.00	0.00	0.00	0.00	0.00	0.00	0.00	0.00	0.00	0.00	—	0.00	0.00	0.00	0.00	0.00	0.00
Hauling	0.03	0.01	0.53	0.20	< 0.005	0.01	0.11	0.12	0.01	0.03	0.04	—	416	416	0.02	0.07	0.03	436
Average Daily	—	—	—	—	—	—	—	—	—	—	—	—	—	—	—	—	—	—
Worker	0.01	0.01	0.02	0.19	0.00	0.00	0.04	0.04	0.00	0.01	0.01	—	41.7	41.7	< 0.005	< 0.005	0.07	42.2
Vendor	0.00	0.00	0.00	0.00	0.00	0.00	0.00	0.00	0.00	0.00	0.00	—	0.00	0.00	0.00	0.00	0.00	0.00
Hauling	< 0.005	< 0.005	0.06	0.02	< 0.005	< 0.005	0.01	0.01	< 0.005	< 0.005	< 0.005	—	50.1	50.1	< 0.005	0.01	0.05	52.6
Annual	—	—	—	—	—	—	—	—	—	—	—	—	—	—	—	—	—	—
Worker	< 0.005	< 0.005	< 0.005	0.04	0.00	0.00	0.01	0.01	0.00	< 0.005	< 0.005	—	6.90	6.90	< 0.005	< 0.005	0.01	6.99
Vendor	0.00	0.00	0.00	0.00	0.00	0.00	0.00	0.00	0.00	0.00	0.00	—	0.00	0.00	0.00	0.00	0.00	0.00
Hauling	< 0.005	< 0.005	0.01	< 0.005	< 0.005	< 0.005	< 0.005	< 0.005	< 0.005	< 0.005	< 0.005	—	8.30	8.30	< 0.005	< 0.005	0.01	8.70

3.3. Paving/Site Restoration (2025) - Unmitigated

Criteria Pollutants (lb/day for daily, ton/yr for annual) and GHGs (lb/day for daily, MT/yr for annual)

Location	TOG	ROG	NOx	CO	SO2	PM10E	PM10D	PM10T	PM2.5E	PM2.5D	PM2.5T	BCO2	NBCO2	CO2T	CH4	N2O	R	CO2e
Onsite	—	—	—	—	—	—	—	—	—	—	—	—	—	—	—	—	—	—

Daily, Summer (Max)	—	—	—	—	—	—	—	—	—	—	—	—	—	—	—	—	—	—
Daily, Winter (Max)	—	—	—	—	—	—	—	—	—	—	—	—	—	—	—	—	—	—
Off-Road Equipment	1.43	1.20	9.65	13.7	0.02	0.44	—	0.44	0.41	—	0.41	—	2,074	2,074	0.08	0.02	—	2,081
Paving	—	0.00	—	—	—	—	—	—	—	—	—	—	—	—	—	—	—	—
Onsite truck	0.00	0.00	0.00	0.00	0.00	0.00	0.00	0.00	0.00	0.00	0.00	—	0.00	0.00	0.00	0.00	0.00	0.00
Average Daily	—	—	—	—	—	—	—	—	—	—	—	—	—	—	—	—	—	—
Off-Road Equipment	0.09	0.08	0.61	0.86	< 0.005	0.03	—	0.03	0.03	—	0.03	—	131	131	0.01	< 0.005	—	131
Paving	—	0.00	—	—	—	—	—	—	—	—	—	—	—	—	—	—	—	—
Onsite truck	0.00	0.00	0.00	0.00	0.00	0.00	0.00	0.00	0.00	0.00	0.00	—	0.00	0.00	0.00	0.00	0.00	0.00
Annual	—	—	—	—	—	—	—	—	—	—	—	—	—	—	—	—	—	—
Off-Road Equipment	0.02	0.01	0.11	0.16	< 0.005	0.01	—	0.01	< 0.005	—	< 0.005	—	21.6	21.6	< 0.005	< 0.005	—	21.7
Paving	—	0.00	—	—	—	—	—	—	—	—	—	—	—	—	—	—	—	—
Onsite truck	0.00	0.00	0.00	0.00	0.00	0.00	0.00	0.00	0.00	0.00	0.00	—	0.00	0.00	0.00	0.00	0.00	0.00
Offsite	—	—	—	—	—	—	—	—	—	—	—	—	—	—	—	—	—	—
Daily, Summer (Max)	—	—	—	—	—	—	—	—	—	—	—	—	—	—	—	—	—	—
Daily, Winter (Max)	—	—	—	—	—	—	—	—	—	—	—	—	—	—	—	—	—	—
Worker	0.08	0.07	0.08	1.03	0.00	0.00	0.23	0.23	0.00	0.05	0.05	—	229	229	0.01	0.01	0.02	232
Vendor	0.00	0.00	0.00	0.00	0.00	0.00	0.00	0.00	0.00	0.00	0.00	—	0.00	0.00	0.00	0.00	0.00	0.00

Hauling	0.00	0.00	0.00	0.00	0.00	0.00	0.00	0.00	0.00	0.00	0.00	—	0.00	0.00	0.00	0.00	0.00	0.00
Average Daily	—	—	—	—	—	—	—	—	—	—	—	—	—	—	—	—	—	—
Worker	0.01	< 0.005	0.01	0.07	0.00	0.00	0.01	0.01	0.00	< 0.005	< 0.005	—	14.7	14.7	< 0.005	< 0.005	0.02	14.9
Vendor	0.00	0.00	0.00	0.00	0.00	0.00	0.00	0.00	0.00	0.00	0.00	—	0.00	0.00	0.00	0.00	0.00	0.00
Hauling	0.00	0.00	0.00	0.00	0.00	0.00	0.00	0.00	0.00	0.00	0.00	—	0.00	0.00	0.00	0.00	0.00	0.00
Annual	—	—	—	—	—	—	—	—	—	—	—	—	—	—	—	—	—	—
Worker	< 0.005	< 0.005	< 0.005	0.01	0.00	0.00	< 0.005	< 0.005	0.00	< 0.005	< 0.005	—	2.43	2.43	< 0.005	< 0.005	< 0.005	2.46
Vendor	0.00	0.00	0.00	0.00	0.00	0.00	0.00	0.00	0.00	0.00	0.00	—	0.00	0.00	0.00	0.00	0.00	0.00
Hauling	0.00	0.00	0.00	0.00	0.00	0.00	0.00	0.00	0.00	0.00	0.00	—	0.00	0.00	0.00	0.00	0.00	0.00

3.4. Paving/Site Restoration (2025) - Mitigated

Criteria Pollutants (lb/day for daily, ton/yr for annual) and GHGs (lb/day for daily, MT/yr for annual)

Location	TOG	ROG	NOx	CO	SO2	PM10E	PM10D	PM10T	PM2.5E	PM2.5D	PM2.5T	BCO2	NBCO2	CO2T	CH4	N2O	R	CO2e
Onsite	—	—	—	—	—	—	—	—	—	—	—	—	—	—	—	—	—	—
Daily, Summer (Max)	—	—	—	—	—	—	—	—	—	—	—	—	—	—	—	—	—	—
Daily, Winter (Max)	—	—	—	—	—	—	—	—	—	—	—	—	—	—	—	—	—	—
Off-Road Equipment	0.24	0.24	4.13	14.6	0.02	0.04	—	0.04	0.04	—	0.04	—	2,074	2,074	0.08	0.02	—	2,081
Paving	—	0.00	—	—	—	—	—	—	—	—	—	—	—	—	—	—	—	—
Onsite truck	0.00	0.00	0.00	0.00	0.00	0.00	0.00	0.00	0.00	0.00	0.00	—	0.00	0.00	0.00	0.00	0.00	0.00
Average Daily	—	—	—	—	—	—	—	—	—	—	—	—	—	—	—	—	—	—
Off-Road Equipment	0.02	0.02	0.26	0.92	< 0.005	< 0.005	—	< 0.005	< 0.005	—	< 0.005	—	131	131	0.01	< 0.005	—	131

Paving	—	0.00	—	—	—	—	—	—	—	—	—	—	—	—	—	—	—	—
Onsite truck	0.00	0.00	0.00	0.00	0.00	0.00	0.00	0.00	0.00	0.00	0.00	—	0.00	0.00	0.00	0.00	0.00	0.00
Annual	—	—	—	—	—	—	—	—	—	—	—	—	—	—	—	—	—	—
Off-Road Equipment	< 0.005	< 0.005	0.05	0.17	< 0.005	< 0.005	—	< 0.005	< 0.005	—	< 0.005	—	21.6	21.6	< 0.005	< 0.005	—	21.7
Paving	—	0.00	—	—	—	—	—	—	—	—	—	—	—	—	—	—	—	—
Onsite truck	0.00	0.00	0.00	0.00	0.00	0.00	0.00	0.00	0.00	0.00	0.00	—	0.00	0.00	0.00	0.00	0.00	0.00
Offsite	—	—	—	—	—	—	—	—	—	—	—	—	—	—	—	—	—	—
Daily, Summer (Max)	—	—	—	—	—	—	—	—	—	—	—	—	—	—	—	—	—	—
Daily, Winter (Max)	—	—	—	—	—	—	—	—	—	—	—	—	—	—	—	—	—	—
Worker	0.08	0.07	0.08	1.03	0.00	0.00	0.23	0.23	0.00	0.05	0.05	—	229	229	0.01	0.01	0.02	232
Vendor	0.00	0.00	0.00	0.00	0.00	0.00	0.00	0.00	0.00	0.00	0.00	—	0.00	0.00	0.00	0.00	0.00	0.00
Hauling	0.00	0.00	0.00	0.00	0.00	0.00	0.00	0.00	0.00	0.00	0.00	—	0.00	0.00	0.00	0.00	0.00	0.00
Average Daily	—	—	—	—	—	—	—	—	—	—	—	—	—	—	—	—	—	—
Worker	0.01	< 0.005	0.01	0.07	0.00	0.00	0.01	0.01	0.00	< 0.005	< 0.005	—	14.7	14.7	< 0.005	< 0.005	0.02	14.9
Vendor	0.00	0.00	0.00	0.00	0.00	0.00	0.00	0.00	0.00	0.00	0.00	—	0.00	0.00	0.00	0.00	0.00	0.00
Hauling	0.00	0.00	0.00	0.00	0.00	0.00	0.00	0.00	0.00	0.00	0.00	—	0.00	0.00	0.00	0.00	0.00	0.00
Annual	—	—	—	—	—	—	—	—	—	—	—	—	—	—	—	—	—	—
Worker	< 0.005	< 0.005	< 0.005	0.01	0.00	0.00	< 0.005	< 0.005	0.00	< 0.005	< 0.005	—	2.43	2.43	< 0.005	< 0.005	< 0.005	2.46
Vendor	0.00	0.00	0.00	0.00	0.00	0.00	0.00	0.00	0.00	0.00	0.00	—	0.00	0.00	0.00	0.00	0.00	0.00
Hauling	0.00	0.00	0.00	0.00	0.00	0.00	0.00	0.00	0.00	0.00	0.00	—	0.00	0.00	0.00	0.00	0.00	0.00

Paving/Site Restoration	Worker	17.5	18.5	LDA,LDT1,LDT2
Paving/Site Restoration	Vendor	0.00	10.2	HHDT,MHDT
Paving/Site Restoration	Hauling	0.00	20.0	HHDT
Paving/Site Restoration	Onsite truck	0.00	—	HHDT

5.4. Vehicles

5.4.1. Construction Vehicle Control Strategies

Non-applicable. No control strategies activated by user.

5.5. Architectural Coatings

Phase Name	Residential Interior Area Coated (sq ft)	Residential Exterior Area Coated (sq ft)	Non-Residential Interior Area Coated (sq ft)	Non-Residential Exterior Area Coated (sq ft)	Parking Area Coated (sq ft)

5.6. Dust Mitigation

5.6.1. Construction Earthmoving Activities

Phase Name	Material Imported (cy)	Material Exported (cy)	Acres Graded (acres)	Material Demolished (sq. ft.)	Acres Paved (acres)
Paving/Site Restoration	0.00	0.00	0.00	0.00	5.00

5.6.2. Construction Earthmoving Control Strategies

Control Strategies Applied	Frequency (per day)	PM10 Reduction	PM2.5 Reduction
Water Exposed Area	3	74%	74%
Water Demolished Area	2	36%	36%

5.7. Construction Paving

Land Use	Area Paved (acres)	% Asphalt

Other Asphalt Surfaces	5.00	0%

5.8. Construction Electricity Consumption and Emissions Factors

kWh per Year and Emission Factor (lb/MWh)

Year	kWh per Year	CO2	CH4	N2O
2025	0.00	532	0.03	< 0.005

8. User Changes to Default Data

Screen	Justification
Construction: Construction Phases	Project Descriptions
Construction: Off-Road Equipment	Based on project information
Construction: Dust From Material Movement	Based on project information
Construction: Paving	No paving phase
Construction: Trips and VMT	Based on project information

Administration Building and Water Quality Laboratory

Garvey - Admin Bldg/WaterQuality Lab Detailed Report

Table of Contents

1. Basic Project Information

    1.1. Basic Project Information

    1.2. Land Use Types

    1.3. User-Selected Emission Reduction Measures by Emissions Sector

2. Emissions Summary

    2.1. Construction Emissions Compared Against Thresholds

    2.2. Construction Emissions by Year, Unmitigated

    2.3. Construction Emissions by Year, Mitigated

3. Construction Emissions Details

    3.1. Infrastructure Installation (2025) - Unmitigated

    3.2. Infrastructure Installation (2025) - Mitigated

    3.3. Infrastructure Installation (2026) - Unmitigated

    3.4. Infrastructure Installation (2026) - Mitigated

    3.5. Architectural Coating (2026) - Unmitigated

3.6. Architectural Coating (2026) - Mitigated

5. Activity Data

5.1. Construction Schedule

5.2. Off-Road Equipment

5.2.1. Unmitigated

5.2.2. Mitigated

5.3. Construction Vehicles

5.3.1. Unmitigated

5.3.2. Mitigated

5.4. Vehicles

5.4.1. Construction Vehicle Control Strategies

5.5. Architectural Coatings

5.6. Dust Mitigation

5.6.1. Construction Earthmoving Activities

5.6.2. Construction Earthmoving Control Strategies

5.7. Construction Paving

5.8. Construction Electricity Consumption and Emissions Factors

8. User Changes to Default Data

1. Basic Project Information

1.1. Basic Project Information

Data Field	Value
Project Name	Garvey - Admin Bldg/Water Quality Lab
Construction Start Date	9/30/2025
Lead Agency	—
Land Use Scale	Project/site
Analysis Level for Defaults	County
Windspeed (m/s)	0.50
Precipitation (days)	18.2
Location	1061 S Orange Ave, Monterey Park, CA 91755, USA
County	Los Angeles-South Coast
City	Monterey Park
Air District	South Coast AQMD
Air Basin	South Coast
TAZ	4170
EDFZ	7
Electric Utility	Southern California Edison
Gas Utility	Southern California Gas
App Version	2022.1.1.21

1.2. Land Use Types

Land Use Subtype	Size	Unit	Lot Acreage	Building Area (sq ft)	Landscape Area (sq ft)	Special Landscape Area (sq ft)	Population	Description
Other Asphalt Surfaces	0.15	Acre	0.15	0.00	0.00	0.00	—	—

1.3. User-Selected Emission Reduction Measures by Emissions Sector

Sector	#	Measure Title
Construction	C-1-A	Use Electric or Hybrid Powered Equipment
Construction	C-5	Use Advanced Engine Tiers

2. Emissions Summary

2.1. Construction Emissions Compared Against Thresholds

Criteria Pollutants (lb/day for daily, ton/yr for annual) and GHGs (lb/day for daily, MT/yr for annual)

Un/Mit.	TOG	ROG	NOx	CO	SO2	PM10E	PM10D	PM10T	PM2.5E	PM2.5D	PM2.5T	BCO2	NBCO2	CO2T	CH4	N2O	R	CO2e
Daily, Summer (Max)	—	—	—	—	—	—	—	—	—	—	—	—	—	—	—	—	—	—
Unmit.	2.04	1.69	14.1	18.2	0.03	0.54	0.42	0.96	0.50	0.10	0.60	—	3,736	3,736	0.16	0.10	2.18	3,772
Mit.	0.45	0.41	5.22	18.6	0.03	0.06	0.42	0.48	0.06	0.10	0.16	—	3,426	3,426	0.15	0.10	2.18	3,461
% Reduced	78%	76%	63%	-2%	13%	90%	—	50%	89%	—	73%	—	8%	8%	8%	2%	—	8%
Daily, Winter (Max)	—	—	—	—	—	—	—	—	—	—	—	—	—	—	—	—	—	—
Unmit.	2.04	1.69	14.1	17.9	0.03	0.54	0.42	0.96	0.50	0.10	0.60	—	3,719	3,719	0.16	0.10	0.06	3,753
Mit.	0.45	0.41	5.25	18.4	0.03	0.06	0.42	0.48	0.06	0.10	0.16	—	3,409	3,409	0.15	0.10	0.06	3,442
% Reduced	78%	76%	63%	-2%	13%	90%	—	50%	89%	—	73%	—	8%	8%	8%	2%	—	8%
Average Daily (Max)	—	—	—	—	—	—	—	—	—	—	—	—	—	—	—	—	—	—
Unmit.	0.67	0.56	4.36	6.32	0.01	0.18	0.12	0.29	0.16	0.03	0.19	—	1,146	1,146	0.05	0.02	0.22	1,154
Mit.	0.14	0.14	1.67	6.57	0.01	0.02	0.12	0.14	0.02	0.03	0.05	—	1,091	1,091	0.05	0.02	0.22	1,099

% Reduced	79%	76%	62%	-4%	—	90%	—	54%	89%	—	76%	—	5%	5%	5%	—	—	5%
Annual (Max)	—	—	—	—	—	—	—	—	—	—	—	—	—	—	—	—	—	—
Unmit.	0.12	0.10	0.80	1.15	< 0.005	0.03	0.02	0.05	0.03	0.01	0.03	—	190	190	0.01	< 0.005	0.04	191
Mit.	0.03	0.02	0.30	1.20	< 0.005	< 0.005	0.02	0.02	< 0.005	0.01	0.01	—	181	181	0.01	< 0.005	0.04	182
% Reduced	79%	76%	62%	-4%	8%	90%	—	54%	89%	—	76%	—	5%	5%	5%	2%	—	5%

2.2. Construction Emissions by Year, Unmitigated

Criteria Pollutants (lb/day for daily, ton/yr for annual) and GHGs (lb/day for daily, MT/yr for annual)

Year	TOG	ROG	NOx	CO	SO2	PM10E	PM10D	PM10T	PM2.5E	PM2.5D	PM2.5T	BCO2	NBCO2	CO2T	CH4	N2O	R	CO2e
Daily - Summer (Max)	—	—	—	—	—	—	—	—	—	—	—	—	—	—	—	—	—	—
2025	2.04	1.69	14.1	18.2	0.03	0.54	0.42	0.96	0.50	0.10	0.60	—	3,736	3,736	0.16	0.10	2.18	3,772
2026	1.34	1.15	8.25	13.3	0.02	0.37	0.18	0.56	0.34	0.04	0.39	—	2,049	2,049	0.08	0.02	0.64	2,058
Daily - Winter (Max)	—	—	—	—	—	—	—	—	—	—	—	—	—	—	—	—	—	—
2025	2.04	1.69	14.1	17.9	0.03	0.54	0.42	0.96	0.50	0.10	0.60	—	3,719	3,719	0.16	0.10	0.06	3,753
2026	1.95	1.61	13.4	17.8	0.03	0.49	0.42	0.91	0.45	0.10	0.55	—	3,705	3,705	0.16	0.10	0.05	3,739
Average Daily	—	—	—	—	—	—	—	—	—	—	—	—	—	—	—	—	—	—
2025	0.37	0.31	2.57	3.28	0.01	0.10	0.08	0.17	0.09	0.02	0.11	—	678	678	0.03	0.02	0.17	684
2026	0.67	0.56	4.36	6.32	0.01	0.18	0.12	0.29	0.16	0.03	0.19	—	1,146	1,146	0.05	0.02	0.22	1,154
Annual	—	—	—	—	—	—	—	—	—	—	—	—	—	—	—	—	—	—
2025	0.07	0.06	0.47	0.60	< 0.005	0.02	0.01	0.03	0.02	< 0.005	0.02	—	112	112	< 0.005	< 0.005	0.03	113
2026	0.12	0.10	0.80	1.15	< 0.005	0.03	0.02	0.05	0.03	0.01	0.03	—	190	190	0.01	< 0.005	0.04	191

2.3. Construction Emissions by Year, Mitigated

Criteria Pollutants (lb/day for daily, ton/yr for annual) and GHGs (lb/day for daily, MT/yr for annual)

Year	TOG	ROG	NOx	CO	SO2	PM10E	PM10D	PM10T	PM2.5E	PM2.5D	PM2.5T	BCO2	NBCO2	CO2T	CH4	N2O	R	CO2e
Daily - Summer (Max)	—	—	—	—	—	—	—	—	—	—	—	—	—	—	—	—	—	—
2025	0.45	0.41	5.22	18.6	0.03	0.06	0.42	0.48	0.06	0.10	0.16	—	3,426	3,426	0.15	0.10	2.18	3,461
2026	0.26	0.28	3.07	14.0	0.02	0.03	0.18	0.22	0.03	0.04	0.08	—	2,050	2,050	0.08	0.02	0.64	2,059
Daily - Winter (Max)	—	—	—	—	—	—	—	—	—	—	—	—	—	—	—	—	—	—
2025	0.45	0.41	5.25	18.4	0.03	0.06	0.42	0.48	0.06	0.10	0.16	—	3,409	3,409	0.15	0.10	0.06	3,442
2026	0.43	0.40	5.22	18.3	0.03	0.06	0.42	0.48	0.06	0.10	0.16	—	3,394	3,394	0.15	0.10	0.05	3,427
Average Daily	—	—	—	—	—	—	—	—	—	—	—	—	—	—	—	—	—	—
2025	0.08	0.07	0.96	3.36	0.01	0.01	0.08	0.09	0.01	0.02	0.03	—	621	621	0.03	0.02	0.17	627
2026	0.14	0.14	1.67	6.57	0.01	0.02	0.12	0.14	0.02	0.03	0.05	—	1,091	1,091	0.05	0.02	0.22	1,099
Annual	—	—	—	—	—	—	—	—	—	—	—	—	—	—	—	—	—	—
2025	0.01	0.01	0.18	0.61	< 0.005	< 0.005	0.01	0.02	< 0.005	< 0.005	0.01	—	103	103	< 0.005	< 0.005	0.03	104
2026	0.03	0.02	0.30	1.20	< 0.005	< 0.005	0.02	0.02	< 0.005	0.01	0.01	—	181	181	0.01	< 0.005	0.04	182

3. Construction Emissions Details

3.1. Infrastructure Installation (2025) - Unmitigated

Criteria Pollutants (lb/day for daily, ton/yr for annual) and GHGs (lb/day for daily, MT/yr for annual)

Location	TOG	ROG	NOx	CO	SO2	PM10E	PM10D	PM10T	PM2.5E	PM2.5D	PM2.5T	BCO2	NBCO2	CO2T	CH4	N2O	R	CO2e
Onsite	—	—	—	—	—	—	—	—	—	—	—	—	—	—	—	—	—	—

Daily, Summer (Max)	—	—	—	—	—	—	—	—	—	—	—	—	—	—	—	—	—	—
Off-Road Equipment	1.89	1.58	13.5	16.3	0.03	0.53	—	0.53	0.49	—	0.49	—	2,988	2,988	0.12	0.02	—	2,999
Onsite truck	0.00	0.00	0.00	0.00	0.00	0.00	0.00	0.00	0.00	0.00	0.00	—	0.00	0.00	0.00	0.00	0.00	0.00
Daily, Winter (Max)	—	—	—	—	—	—	—	—	—	—	—	—	—	—	—	—	—	—
Off-Road Equipment	1.89	1.58	13.5	16.3	0.03	0.53	—	0.53	0.49	—	0.49	—	2,988	2,988	0.12	0.02	—	2,999
Onsite truck	0.00	0.00	0.00	0.00	0.00	0.00	0.00	0.00	0.00	0.00	0.00	—	0.00	0.00	0.00	0.00	0.00	0.00
Average Daily	—	—	—	—	—	—	—	—	—	—	—	—	—	—	—	—	—	—
Off-Road Equipment	0.34	0.29	2.45	2.97	0.01	0.10	—	0.10	0.09	—	0.09	—	544	544	0.02	< 0.005	—	546
Onsite truck	0.00	0.00	0.00	0.00	0.00	0.00	0.00	0.00	0.00	0.00	0.00	—	0.00	0.00	0.00	0.00	0.00	0.00
Annual	—	—	—	—	—	—	—	—	—	—	—	—	—	—	—	—	—	—
Off-Road Equipment	0.06	0.05	0.45	0.54	< 0.005	0.02	—	0.02	0.02	—	0.02	—	90.0	90.0	< 0.005	< 0.005	—	90.4
Onsite truck	0.00	0.00	0.00	0.00	0.00	0.00	0.00	0.00	0.00	0.00	0.00	—	0.00	0.00	0.00	0.00	0.00	0.00
Offsite	—	—	—	—	—	—	—	—	—	—	—	—	—	—	—	—	—	—
Daily, Summer (Max)	—	—	—	—	—	—	—	—	—	—	—	—	—	—	—	—	—	—
Worker	0.11	0.10	0.10	1.67	0.00	0.00	0.31	0.31	0.00	0.07	0.07	—	332	332	0.01	0.01	1.21	337
Vendor	0.00	0.00	0.00	0.00	0.00	0.00	0.00	0.00	0.00	0.00	0.00	—	0.00	0.00	0.00	0.00	0.00	0.00
Hauling	0.03	0.01	0.51	0.20	< 0.005	0.01	0.11	0.12	0.01	0.03	0.04	—	416	416	0.02	0.07	0.96	437

Daily, Winter (Max)	—	—	—	—	—	—	—	—	—	—	—	—	—	—	—	—	—	—
Worker	0.11	0.10	0.12	1.42	0.00	0.00	0.31	0.31	0.00	0.07	0.07	—	315	315	0.01	0.01	0.03	318
Vendor	0.00	0.00	0.00	0.00	0.00	0.00	0.00	0.00	0.00	0.00	0.00	—	0.00	0.00	0.00	0.00	0.00	0.00
Hauling	0.03	0.01	0.53	0.20	< 0.005	0.01	0.11	0.12	0.01	0.03	0.04	—	416	416	0.02	0.07	0.03	436
Average Daily	—	—	—	—	—	—	—	—	—	—	—	—	—	—	—	—	—	—
Worker	0.02	0.02	0.02	0.27	0.00	0.00	0.06	0.06	0.00	0.01	0.01	—	58.1	58.1	< 0.005	< 0.005	0.10	58.9
Vendor	0.00	0.00	0.00	0.00	0.00	0.00	0.00	0.00	0.00	0.00	0.00	—	0.00	0.00	0.00	0.00	0.00	0.00
Hauling	0.01	< 0.005	0.10	0.04	< 0.005	< 0.005	0.02	0.02	< 0.005	0.01	0.01	—	75.7	75.7	< 0.005	0.01	0.08	79.4
Annual	—	—	—	—	—	—	—	—	—	—	—	—	—	—	—	—	—	—
Worker	< 0.005	< 0.005	< 0.005	0.05	0.00	0.00	0.01	0.01	0.00	< 0.005	< 0.005	—	9.62	9.62	< 0.005	< 0.005	0.02	9.75
Vendor	0.00	0.00	0.00	0.00	0.00	0.00	0.00	0.00	0.00	0.00	0.00	—	0.00	0.00	0.00	0.00	0.00	0.00
Hauling	< 0.005	< 0.005	0.02	0.01	< 0.005	< 0.005	< 0.005	< 0.005	< 0.005	< 0.005	< 0.005	—	12.5	12.5	< 0.005	< 0.005	0.01	13.1

3.2. Infrastructure Installation (2025) - Mitigated

Criteria Pollutants (lb/day for daily, ton/yr for annual) and GHGs (lb/day for daily, MT/yr for annual)

Location	TOG	ROG	NOx	CO	SO2	PM10E	PM10D	PM10T	PM2.5E	PM2.5D	PM2.5T	BCO2	NBCO2	CO2T	CH4	N2O	R	CO2e
Onsite	—	—	—	—	—	—	—	—	—	—	—	—	—	—	—	—	—	—
Daily, Summer (Max)	—	—	—	—	—	—	—	—	—	—	—	—	—	—	—	—	—	—
Off-Road Equipment	0.30	0.30	4.61	16.8	0.03	0.05	—	0.05	0.05	—	0.05	—	2,677	2,677	0.11	0.02	—	2,686
Onsite truck	0.00	0.00	0.00	0.00	0.00	0.00	0.00	0.00	0.00	0.00	0.00	—	0.00	0.00	0.00	0.00	0.00	0.00
Daily, Winter (Max)	—	—	—	—	—	—	—	—	—	—	—	—	—	—	—	—	—	—

Off-Road Equipment	0.30	0.30	4.61	16.8	0.03	0.05	—	0.05	0.05	—	0.05	—	2,677	2,677	0.11	0.02	—	2,686
Onsite truck	0.00	0.00	0.00	0.00	0.00	0.00	0.00	0.00	0.00	0.00	0.00	—	0.00	0.00	0.00	0.00	0.00	0.00
Average Daily	—	—	—	—	—	—	—	—	—	—	—	—	—	—	—	—	—	—
Off-Road Equipment	0.06	0.06	0.84	3.05	< 0.005	0.01	—	0.01	0.01	—	0.01	—	487	487	0.02	< 0.005	—	489
Onsite truck	0.00	0.00	0.00	0.00	0.00	0.00	0.00	0.00	0.00	0.00	0.00	—	0.00	0.00	0.00	0.00	0.00	0.00
Annual	—	—	—	—	—	—	—	—	—	—	—	—	—	—	—	—	—	—
Off-Road Equipment	0.01	0.01	0.15	0.56	< 0.005	< 0.005	—	< 0.005	< 0.005	—	< 0.005	—	80.7	80.7	< 0.005	< 0.005	—	80.9
Onsite truck	0.00	0.00	0.00	0.00	0.00	0.00	0.00	0.00	0.00	0.00	0.00	—	0.00	0.00	0.00	0.00	0.00	0.00
Offsite	—	—	—	—	—	—	—	—	—	—	—	—	—	—	—	—	—	—
Daily, Summer (Max)	—	—	—	—	—	—	—	—	—	—	—	—	—	—	—	—	—	—
Worker	0.11	0.10	0.10	1.67	0.00	0.00	0.31	0.31	0.00	0.07	0.07	—	332	332	0.01	0.01	1.21	337
Vendor	0.00	0.00	0.00	0.00	0.00	0.00	0.00	0.00	0.00	0.00	0.00	—	0.00	0.00	0.00	0.00	0.00	0.00
Hauling	0.03	0.01	0.51	0.20	< 0.005	0.01	0.11	0.12	0.01	0.03	0.04	—	416	416	0.02	0.07	0.96	437
Daily, Winter (Max)	—	—	—	—	—	—	—	—	—	—	—	—	—	—	—	—	—	—
Worker	0.11	0.10	0.12	1.42	0.00	0.00	0.31	0.31	0.00	0.07	0.07	—	315	315	0.01	0.01	0.03	318
Vendor	0.00	0.00	0.00	0.00	0.00	0.00	0.00	0.00	0.00	0.00	0.00	—	0.00	0.00	0.00	0.00	0.00	0.00
Hauling	0.03	0.01	0.53	0.20	< 0.005	0.01	0.11	0.12	0.01	0.03	0.04	—	416	416	0.02	0.07	0.03	436
Average Daily	—	—	—	—	—	—	—	—	—	—	—	—	—	—	—	—	—	—
Worker	0.02	0.02	0.02	0.27	0.00	0.00	0.06	0.06	0.00	0.01	0.01	—	58.1	58.1	< 0.005	< 0.005	0.10	58.9
Vendor	0.00	0.00	0.00	0.00	0.00	0.00	0.00	0.00	0.00	0.00	0.00	—	0.00	0.00	0.00	0.00	0.00	0.00

Hauling	0.01	< 0.005	0.10	0.04	< 0.005	< 0.005	0.02	0.02	< 0.005	0.01	0.01	—	75.7	75.7	< 0.005	0.01	0.08	79.4
Annual	—	—	—	—	—	—	—	—	—	—	—	—	—	—	—	—	—	—
Worker	< 0.005	< 0.005	< 0.005	0.05	0.00	0.00	0.01	0.01	0.00	< 0.005	< 0.005	—	9.62	9.62	< 0.005	< 0.005	0.02	9.75
Vendor	0.00	0.00	0.00	0.00	0.00	0.00	0.00	0.00	0.00	0.00	0.00	—	0.00	0.00	0.00	0.00	0.00	0.00
Hauling	< 0.005	< 0.005	0.02	0.01	< 0.005	< 0.005	< 0.005	< 0.005	< 0.005	< 0.005	< 0.005	—	12.5	12.5	< 0.005	< 0.005	0.01	13.1

3.3. Infrastructure Installation (2026) - Unmitigated

Criteria Pollutants (lb/day for daily, ton/yr for annual) and GHGs (lb/day for daily, MT/yr for annual)

Location	TOG	ROG	NOx	CO	SO2	PM10E	PM10D	PM10T	PM2.5E	PM2.5D	PM2.5T	BCO2	NBCO2	CO2T	CH4	N2O	R	CO2e
Onsite	—	—	—	—	—	—	—	—	—	—	—	—	—	—	—	—	—	—
Daily, Summer (Max)	—	—	—	—	—	—	—	—	—	—	—	—	—	—	—	—	—	—
Daily, Winter (Max)	—	—	—	—	—	—	—	—	—	—	—	—	—	—	—	—	—	—
Off-Road Equipment	1.82	1.52	12.8	16.3	0.03	0.48	—	0.48	0.44	—	0.44	—	2,988	2,988	0.12	0.02	—	2,999
Onsite truck	0.00	0.00	0.00	0.00	0.00	0.00	0.00	0.00	0.00	0.00	0.00	—	0.00	0.00	0.00	0.00	0.00	0.00
Average Daily	—	—	—	—	—	—	—	—	—	—	—	—	—	—	—	—	—	—
Off-Road Equipment	0.32	0.27	2.25	2.86	0.01	0.09	—	0.09	0.08	—	0.08	—	526	526	0.02	< 0.005	—	528
Onsite truck	0.00	0.00	0.00	0.00	0.00	0.00	0.00	0.00	0.00	0.00	0.00	—	0.00	0.00	0.00	0.00	0.00	0.00
Annual	—	—	—	—	—	—	—	—	—	—	—	—	—	—	—	—	—	—
Off-Road Equipment	0.06	0.05	0.41	0.52	< 0.005	0.02	—	0.02	0.01	—	0.01	—	87.1	87.1	< 0.005	< 0.005	—	87.4
Onsite truck	0.00	0.00	0.00	0.00	0.00	0.00	0.00	0.00	0.00	0.00	0.00	—	0.00	0.00	0.00	0.00	0.00	0.00

Offsite	—	—	—	—	—	—	—	—	—	—	—	—	—	—	—	—	—	—
Daily, Summer (Max)	—	—	—	—	—	—	—	—	—	—	—	—	—	—	—	—	—	—
Daily, Winter (Max)	—	—	—	—	—	—	—	—	—	—	—	—	—	—	—	—	—	—
Worker	0.10	0.09	0.10	1.32	0.00	0.00	0.31	0.31	0.00	0.07	0.07	—	308	308	0.01	0.01	0.03	312
Vendor	0.00	0.00	0.00	0.00	0.00	0.00	0.00	0.00	0.00	0.00	0.00	—	0.00	0.00	0.00	0.00	0.00	0.00
Hauling	0.03	0.01	0.51	0.20	< 0.005	0.01	0.11	0.12	0.01	0.03	0.04	—	408	408	0.02	0.07	0.02	428
Average Daily	—	—	—	—	—	—	—	—	—	—	—	—	—	—	—	—	—	—
Worker	0.02	0.02	0.02	0.24	0.00	0.00	0.05	0.05	0.00	0.01	0.01	—	55.1	55.1	< 0.005	< 0.005	0.08	55.8
Vendor	0.00	0.00	0.00	0.00	0.00	0.00	0.00	0.00	0.00	0.00	0.00	—	0.00	0.00	0.00	0.00	0.00	0.00
Hauling	0.01	< 0.005	0.09	0.03	< 0.005	< 0.005	0.02	0.02	< 0.005	0.01	0.01	—	71.9	71.9	< 0.005	0.01	0.07	75.5
Annual	—	—	—	—	—	—	—	—	—	—	—	—	—	—	—	—	—	—
Worker	< 0.005	< 0.005	< 0.005	0.04	0.00	0.00	0.01	0.01	0.00	< 0.005	< 0.005	—	9.12	9.12	< 0.005	< 0.005	0.01	9.24
Vendor	0.00	0.00	0.00	0.00	0.00	0.00	0.00	0.00	0.00	0.00	0.00	—	0.00	0.00	0.00	0.00	0.00	0.00
Hauling	< 0.005	< 0.005	0.02	0.01	< 0.005	< 0.005	< 0.005	< 0.005	< 0.005	< 0.005	< 0.005	—	11.9	11.9	< 0.005	< 0.005	0.01	12.5

3.4. Infrastructure Installation (2026) - Mitigated

Criteria Pollutants (lb/day for daily, ton/yr for annual) and GHGs (lb/day for daily, MT/yr for annual)

Location	TOG	ROG	NOx	CO	SO2	PM10E	PM10D	PM10T	PM2.5E	PM2.5D	PM2.5T	BCO2	NBCO2	CO2T	CH4	N2O	R	CO2e
Onsite	—	—	—	—	—	—	—	—	—	—	—	—	—	—	—	—	—	—
Daily, Summer (Max)	—	—	—	—	—	—	—	—	—	—	—	—	—	—	—	—	—	—
Daily, Winter (Max)	—	—	—	—	—	—	—	—	—	—	—	—	—	—	—	—	—	—

Off-Road Equipment	0.30	0.30	4.61	16.8	0.03	0.05	—	0.05	0.05	—	0.05	—	2,677	2,677	0.11	0.02	—	2,686
Onsite truck	0.00	0.00	0.00	0.00	0.00	0.00	0.00	0.00	0.00	0.00	0.00	—	0.00	0.00	0.00	0.00	0.00	0.00
Average Daily	—	—	—	—	—	—	—	—	—	—	—	—	—	—	—	—	—	—
Off-Road Equipment	0.05	0.05	0.81	2.95	< 0.005	0.01	—	0.01	0.01	—	0.01	—	471	471	0.02	< 0.005	—	473
Onsite truck	0.00	0.00	0.00	0.00	0.00	0.00	0.00	0.00	0.00	0.00	0.00	—	0.00	0.00	0.00	0.00	0.00	0.00
Annual	—	—	—	—	—	—	—	—	—	—	—	—	—	—	—	—	—	—
Off-Road Equipment	0.01	0.01	0.15	0.54	< 0.005	< 0.005	—	< 0.005	< 0.005	—	< 0.005	—	78.1	78.1	< 0.005	< 0.005	—	78.3
Onsite truck	0.00	0.00	0.00	0.00	0.00	0.00	0.00	0.00	0.00	0.00	0.00	—	0.00	0.00	0.00	0.00	0.00	0.00
Offsite	—	—	—	—	—	—	—	—	—	—	—	—	—	—	—	—	—	—
Daily, Summer (Max)	—	—	—	—	—	—	—	—	—	—	—	—	—	—	—	—	—	—
Daily, Winter (Max)	—	—	—	—	—	—	—	—	—	—	—	—	—	—	—	—	—	—
Worker	0.10	0.09	0.10	1.32	0.00	0.00	0.31	0.31	0.00	0.07	0.07	—	308	308	0.01	0.01	0.03	312
Vendor	0.00	0.00	0.00	0.00	0.00	0.00	0.00	0.00	0.00	0.00	0.00	—	0.00	0.00	0.00	0.00	0.00	0.00
Hauling	0.03	0.01	0.51	0.20	< 0.005	0.01	0.11	0.12	0.01	0.03	0.04	—	408	408	0.02	0.07	0.02	428
Average Daily	—	—	—	—	—	—	—	—	—	—	—	—	—	—	—	—	—	—
Worker	0.02	0.02	0.02	0.24	0.00	0.00	0.05	0.05	0.00	0.01	0.01	—	55.1	55.1	< 0.005	< 0.005	0.08	55.8
Vendor	0.00	0.00	0.00	0.00	0.00	0.00	0.00	0.00	0.00	0.00	0.00	—	0.00	0.00	0.00	0.00	0.00	0.00
Hauling	0.01	< 0.005	0.09	0.03	< 0.005	< 0.005	0.02	0.02	< 0.005	0.01	0.01	—	71.9	71.9	< 0.005	0.01	0.07	75.5
Annual	—	—	—	—	—	—	—	—	—	—	—	—	—	—	—	—	—	—
Worker	< 0.005	< 0.005	< 0.005	0.04	0.00	0.00	0.01	0.01	0.00	< 0.005	< 0.005	—	9.12	9.12	< 0.005	< 0.005	0.01	9.24

Vendor	0.00	0.00	0.00	0.00	0.00	0.00	0.00	0.00	0.00	0.00	0.00	—	0.00	0.00	0.00	0.00	0.00	0.00
Hauling	< 0.005	< 0.005	0.02	0.01	< 0.005	< 0.005	< 0.005	< 0.005	< 0.005	< 0.005	< 0.005	—	11.9	11.9	< 0.005	< 0.005	0.01	12.5

3.5. Architectural Coating (2026) - Unmitigated

Criteria Pollutants (lb/day for daily, ton/yr for annual) and GHGs (lb/day for daily, MT/yr for annual)

Location	TOG	ROG	NOx	CO	SO2	PM10E	PM10D	PM10T	PM2.5E	PM2.5D	PM2.5T	BCO2	NBCO2	CO2T	CH4	N2O	R	CO2e
Onsite	—	—	—	—	—	—	—	—	—	—	—	—	—	—	—	—	—	—
Daily, Summer (Max)	—	—	—	—	—	—	—	—	—	—	—	—	—	—	—	—	—	—
Off-Road Equipment	1.28	1.07	8.19	12.4	0.02	0.37	—	0.37	0.34	—	0.34	—	1,859	1,859	0.08	0.02	—	1,866
Architectural Coatings	—	0.02	—	—	—	—	—	—	—	—	—	—	—	—	—	—	—	—
Onsite truck	0.00	0.00	0.00	0.00	0.00	0.00	0.00	0.00	0.00	0.00	0.00	—	0.00	0.00	0.00	0.00	0.00	0.00
Daily, Winter (Max)	—	—	—	—	—	—	—	—	—	—	—	—	—	—	—	—	—	—
Average Daily	—	—	—	—	—	—	—	—	—	—	—	—	—	—	—	—	—	—
Off-Road Equipment	0.31	0.26	1.98	2.98	< 0.005	0.09	—	0.09	0.08	—	0.08	—	448	448	0.02	< 0.005	—	450
Architectural Coatings	—	< 0.005	—	—	—	—	—	—	—	—	—	—	—	—	—	—	—	—
Onsite truck	0.00	0.00	0.00	0.00	0.00	0.00	0.00	0.00	0.00	0.00	0.00	—	0.00	0.00	0.00	0.00	0.00	0.00
Annual	—	—	—	—	—	—	—	—	—	—	—	—	—	—	—	—	—	—
Off-Road Equipment	0.06	0.05	0.36	0.54	< 0.005	0.02	—	0.02	0.02	—	0.02	—	74.2	74.2	< 0.005	< 0.005	—	74.5

Architect Coatings	—	< 0.005	—	—	—	—	—	—	—	—	—	—	—	—	—	—	—	—
Onsite truck	0.00	0.00	0.00	0.00	0.00	0.00	0.00	0.00	0.00	0.00	0.00	—	0.00	0.00	0.00	0.00	0.00	0.00
Offsite	—	—	—	—	—	—	—	—	—	—	—	—	—	—	—	—	—	—
Daily, Summer (Max)	—	—	—	—	—	—	—	—	—	—	—	—	—	—	—	—	—	—
Worker	0.06	0.05	0.05	0.90	0.00	0.00	0.18	0.18	0.00	0.04	0.04	—	190	190	0.01	0.01	0.64	192
Vendor	0.00	0.00	0.00	0.00	0.00	0.00	0.00	0.00	0.00	0.00	0.00	—	0.00	0.00	0.00	0.00	0.00	0.00
Hauling	0.00	0.00	0.00	0.00	0.00	0.00	0.00	0.00	0.00	0.00	0.00	—	0.00	0.00	0.00	0.00	0.00	0.00
Daily, Winter (Max)	—	—	—	—	—	—	—	—	—	—	—	—	—	—	—	—	—	—
Average Daily	—	—	—	—	—	—	—	—	—	—	—	—	—	—	—	—	—	—
Worker	0.01	0.01	0.02	0.19	0.00	0.00	0.04	0.04	0.00	0.01	0.01	—	44.0	44.0	< 0.005	< 0.005	0.07	44.6
Vendor	0.00	0.00	0.00	0.00	0.00	0.00	0.00	0.00	0.00	0.00	0.00	—	0.00	0.00	0.00	0.00	0.00	0.00
Hauling	0.00	0.00	0.00	0.00	0.00	0.00	0.00	0.00	0.00	0.00	0.00	—	0.00	0.00	0.00	0.00	0.00	0.00
Annual	—	—	—	—	—	—	—	—	—	—	—	—	—	—	—	—	—	—
Worker	< 0.005	< 0.005	< 0.005	0.04	0.00	0.00	0.01	0.01	0.00	< 0.005	< 0.005	—	7.28	7.28	< 0.005	< 0.005	0.01	7.38
Vendor	0.00	0.00	0.00	0.00	0.00	0.00	0.00	0.00	0.00	0.00	0.00	—	0.00	0.00	0.00	0.00	0.00	0.00
Hauling	0.00	0.00	0.00	0.00	0.00	0.00	0.00	0.00	0.00	0.00	0.00	—	0.00	0.00	0.00	0.00	0.00	0.00

3.6. Architectural Coating (2026) - Mitigated

Criteria Pollutants (lb/day for daily, ton/yr for annual) and GHGs (lb/day for daily, MT/yr for annual)

Location	TOG	ROG	NOx	CO	SO2	PM10E	PM10D	PM10T	PM2.5E	PM2.5D	PM2.5T	BCO2	NBCO2	CO2T	CH4	N2O	R	CO2e
Onsite	—	—	—	—	—	—	—	—	—	—	—	—	—	—	—	—	—	—

Daily, Summer (Max)	—	—	—	—	—	—	—	—	—	—	—	—	—	—	—	—	—	—
Off-Road Equipment	0.21	0.21	3.02	13.1	0.02	0.03	—	0.03	0.03	—	0.03	—	1,859	1,859	0.08	0.02	—	1,866
Architectural Coatings	—	0.02	—	—	—	—	—	—	—	—	—	—	—	—	—	—	—	—
Onsite truck	0.00	0.00	0.00	0.00	0.00	0.00	0.00	0.00	0.00	0.00	0.00	—	0.00	0.00	0.00	0.00	0.00	0.00
Daily, Winter (Max)	—	—	—	—	—	—	—	—	—	—	—	—	—	—	—	—	—	—
Average Daily	—	—	—	—	—	—	—	—	—	—	—	—	—	—	—	—	—	—
Off-Road Equipment	0.05	0.05	0.73	3.15	< 0.005	0.01	—	0.01	0.01	—	0.01	—	448	448	0.02	< 0.005	—	450
Architectural Coatings	—	< 0.005	—	—	—	—	—	—	—	—	—	—	—	—	—	—	—	—
Onsite truck	0.00	0.00	0.00	0.00	0.00	0.00	0.00	0.00	0.00	0.00	0.00	—	0.00	0.00	0.00	0.00	0.00	0.00
Annual	—	—	—	—	—	—	—	—	—	—	—	—	—	—	—	—	—	—
Off-Road Equipment	0.01	0.01	0.13	0.57	< 0.005	< 0.005	—	< 0.005	< 0.005	—	< 0.005	—	74.2	74.2	< 0.005	< 0.005	—	74.5
Architectural Coatings	—	< 0.005	—	—	—	—	—	—	—	—	—	—	—	—	—	—	—	—
Onsite truck	0.00	0.00	0.00	0.00	0.00	0.00	0.00	0.00	0.00	0.00	0.00	—	0.00	0.00	0.00	0.00	0.00	0.00
Offsite	—	—	—	—	—	—	—	—	—	—	—	—	—	—	—	—	—	—
Daily, Summer (Max)	—	—	—	—	—	—	—	—	—	—	—	—	—	—	—	—	—	—
Worker	0.06	0.05	0.05	0.90	0.00	0.00	0.18	0.18	0.00	0.04	0.04	—	190	190	0.01	0.01	0.64	192

Vendor	0.00	0.00	0.00	0.00	0.00	0.00	0.00	0.00	0.00	0.00	0.00	—	0.00	0.00	0.00	0.00	0.00	0.00
Hauling	0.00	0.00	0.00	0.00	0.00	0.00	0.00	0.00	0.00	0.00	0.00	—	0.00	0.00	0.00	0.00	0.00	0.00
Daily, Winter (Max)	—	—	—	—	—	—	—	—	—	—	—	—	—	—	—	—	—	—
Average Daily	—	—	—	—	—	—	—	—	—	—	—	—	—	—	—	—	—	—
Worker	0.01	0.01	0.02	0.19	0.00	0.00	0.04	0.04	0.00	0.01	0.01	—	44.0	44.0	< 0.005	< 0.005	0.07	44.6
Vendor	0.00	0.00	0.00	0.00	0.00	0.00	0.00	0.00	0.00	0.00	0.00	—	0.00	0.00	0.00	0.00	0.00	0.00
Hauling	0.00	0.00	0.00	0.00	0.00	0.00	0.00	0.00	0.00	0.00	0.00	—	0.00	0.00	0.00	0.00	0.00	0.00
Annual	—	—	—	—	—	—	—	—	—	—	—	—	—	—	—	—	—	—
Worker	< 0.005	< 0.005	< 0.005	0.04	0.00	0.00	0.01	0.01	0.00	< 0.005	< 0.005	—	7.28	7.28	< 0.005	< 0.005	0.01	7.38
Vendor	0.00	0.00	0.00	0.00	0.00	0.00	0.00	0.00	0.00	0.00	0.00	—	0.00	0.00	0.00	0.00	0.00	0.00
Hauling	0.00	0.00	0.00	0.00	0.00	0.00	0.00	0.00	0.00	0.00	0.00	—	0.00	0.00	0.00	0.00	0.00	0.00

5. Activity Data

5.1. Construction Schedule

Phase Name	Phase Type	Start Date	End Date	Days Per Week	Work Days per Phase	Phase Description
Infrastructure Installation	Building Construction	9/30/2025	3/31/2026	5.00	131	—
Architectural Coating	Architectural Coating	4/1/2026	7/31/2026	5.00	88.0	—

5.2. Off-Road Equipment

5.2.1. Unmitigated

Phase Name	Equipment Type	Fuel Type	Engine Tier	Number per Day	Hours Per Day	Horsepower	Load Factor
Infrastructure Installation	Forklifts	Diesel	Average	1.00	8.00	82.0	0.20
Infrastructure Installation	Generator Sets	Diesel	Average	3.00	8.00	14.0	0.74
Infrastructure Installation	Tractors/Loaders/Backhoes	Diesel	Average	1.00	8.00	84.0	0.37
Infrastructure Installation	Air Compressors	Diesel	Average	2.00	8.00	37.0	0.48
Infrastructure Installation	Cranes	Diesel	Average	1.00	8.00	367	0.29
Infrastructure Installation	Rubber Tired Loaders	Diesel	Average	1.00	8.00	150	0.36
Infrastructure Installation	Skid Steer Loaders	Diesel	Average	1.00	8.00	71.0	0.37
Infrastructure Installation	Excavators	Diesel	Average	1.00	8.00	36.0	0.38
Architectural Coating	Air Compressors	Diesel	Average	1.00	8.00	37.0	0.48
Architectural Coating	Graders	Diesel	Average	1.00	8.00	148	0.41

Architectural Coating	Rubber Tired Loaders	Diesel	Average	1.00	8.00	150	0.36
Architectural Coating	Paving Equipment	Diesel	Average	1.00	8.00	89.0	0.36
Architectural Coating	Rollers	Diesel	Average	2.00	8.00	36.0	0.38
Architectural Coating	Skid Steer Loaders	Diesel	Average	1.00	1.00	71.0	0.37

5.2.2. Mitigated

Phase Name	Equipment Type	Fuel Type	Engine Tier	Number per Day	Hours Per Day	Horsepower	Load Factor
Infrastructure Installation	Forklifts	Diesel	Tier 4 Final	1.00	8.00	82.0	0.20
Infrastructure Installation	Generator Sets	Electric	Average	3.00	8.00	14.0	0.74
Infrastructure Installation	Tractors/Loaders/Backhoes	Diesel	Tier 4 Final	1.00	8.00	84.0	0.37
Infrastructure Installation	Air Compressors	Diesel	Tier 4 Final	2.00	8.00	37.0	0.48
Infrastructure Installation	Cranes	Diesel	Tier 4 Final	1.00	8.00	367	0.29
Infrastructure Installation	Rubber Tired Loaders	Diesel	Tier 4 Final	1.00	8.00	150	0.36
Infrastructure Installation	Skid Steer Loaders	Diesel	Tier 4 Final	1.00	8.00	71.0	0.37
Infrastructure Installation	Excavators	Diesel	Tier 4 Final	1.00	8.00	36.0	0.38
Architectural Coating	Air Compressors	Diesel	Tier 4 Final	1.00	8.00	37.0	0.48
Architectural Coating	Graders	Diesel	Tier 4 Final	1.00	8.00	148	0.41
Architectural Coating	Rubber Tired Loaders	Diesel	Tier 4 Final	1.00	8.00	150	0.36
Architectural Coating	Paving Equipment	Diesel	Tier 4 Final	1.00	8.00	89.0	0.36
Architectural Coating	Rollers	Diesel	Tier 4 Final	2.00	8.00	36.0	0.38
Architectural Coating	Skid Steer Loaders	Diesel	Tier 4 Final	1.00	1.00	71.0	0.37

5.3. Construction Vehicles

5.3.1. Unmitigated

Phase Name	Trip Type	One-Way Trips per Day	Miles per Trip	Vehicle Mix

Infrastructure Installation	—	—	—	—
Infrastructure Installation	Worker	24.0	18.5	LDA,LDT1,LDT2
Infrastructure Installation	Vendor	0.00	10.2	HHDT,MHDT
Infrastructure Installation	Hauling	6.00	20.0	HHDT
Infrastructure Installation	Onsite truck	0.00	—	HHDT
Architectural Coating	—	—	—	—
Architectural Coating	Worker	14.0	18.5	LDA,LDT1,LDT2
Architectural Coating	Vendor	0.00	10.2	HHDT,MHDT
Architectural Coating	Hauling	0.00	20.0	HHDT
Architectural Coating	Onsite truck	0.00	—	HHDT

5.3.2. Mitigated

Phase Name	Trip Type	One-Way Trips per Day	Miles per Trip	Vehicle Mix
Infrastructure Installation	—	—	—	—
Infrastructure Installation	Worker	24.0	18.5	LDA,LDT1,LDT2
Infrastructure Installation	Vendor	0.00	10.2	HHDT,MHDT
Infrastructure Installation	Hauling	6.00	20.0	HHDT
Infrastructure Installation	Onsite truck	0.00	—	HHDT
Architectural Coating	—	—	—	—
Architectural Coating	Worker	14.0	18.5	LDA,LDT1,LDT2
Architectural Coating	Vendor	0.00	10.2	HHDT,MHDT
Architectural Coating	Hauling	0.00	20.0	HHDT
Architectural Coating	Onsite truck	0.00	—	HHDT

5.4. Vehicles

5.4.1. Construction Vehicle Control Strategies

Non-applicable. No control strategies activated by user.

5.5. Architectural Coatings

Phase Name	Residential Interior Area Coated (sq ft)	Residential Exterior Area Coated (sq ft)	Non-Residential Interior Area Coated (sq ft)	Non-Residential Exterior Area Coated (sq ft)	Parking Area Coated (sq ft)
Architectural Coating	0.00	0.00	0.00	0.00	392

5.6. Dust Mitigation

5.6.1. Construction Earthmoving Activities

Phase Name	Material Imported (cy)	Material Exported (cy)	Acres Graded (acres)	Material Demolished (sq. ft.)	Acres Paved (acres)

5.6.2. Construction Earthmoving Control Strategies

Control Strategies Applied	Frequency (per day)	PM10 Reduction	PM2.5 Reduction
Water Exposed Area	3	74%	74%
Water Demolished Area	2	36%	36%

5.7. Construction Paving

Land Use	Area Paved (acres)	% Asphalt
Other Asphalt Surfaces	5.00	0%

5.8. Construction Electricity Consumption and Emissions Factors

kWh per Year and Emission Factor (lb/MWh)

Year	kWh per Year	CO2	CH4	N2O
2025	0.00	532	0.03	< 0.005
2026	0.00	532	0.03	< 0.005

8. User Changes to Default Data

Screen	Justification
Construction: Construction Phases	Project Descriptions
Construction: Off-Road Equipment	Based on project information
Construction: Dust From Material Movement	Based on project information
Construction: Paving	No paving phase
Construction: Trips and VMT	Based on project information

Proposed Pump Station

Garvey - Pump Station Detailed Report

Table of Contents

1. Basic Project Information

1.1. Basic Project Information

1.2. Land Use Types

1.3. User-Selected Emission Reduction Measures by Emissions Sector

2. Emissions Summary

2.1. Construction Emissions Compared Against Thresholds

2.2. Construction Emissions by Year, Unmitigated

2.3. Construction Emissions by Year, Mitigated

2.4. Operations Emissions Compared Against Thresholds

2.5. Operations Emissions by Sector, Unmitigated

2.6. Operations Emissions by Sector, Mitigated

3. Construction Emissions Details

3.1. Site Prep (2034) - Unmitigated

3.2. Site Prep (2034) - Mitigated

3.3. Grading (2034) - Unmitigated

3.4. Grading (2034) - Mitigated

3.5. Infrastructure Installation (2034) - Unmitigated

3.6. Infrastructure Installation (2034) - Mitigated

3.7. Infrastructure Installation (2035) - Unmitigated

3.8.Infrastructure Installation (2035) - Mitigated

4. Operations Emissions Details

4.1. Mobile Emissions by Land Use

4.1.1. Unmitigated

4.1.2. Mitigated

4.2. Energy

4.2.1. Electricity Emissions By Land Use - Unmitigated

4.2.2. Electricity Emissions By Land Use - Mitigated

5. Activity Data

5.1. Construction Schedule

5.2. Off-Road Equipment

5.2.1. Unmitigated

5.2.2. Mitigated

5.3. Construction Vehicles

5.3.1. Unmitigated

5.3.2. Mitigated

5.4. Vehicles

5.4.1. Construction Vehicle Control Strategies

5.5. Architectural Coatings

5.6. Dust Mitigation

5.6.1. Construction Earthmoving Activities

5.6.2. Construction Earthmoving Control Strategies

5.7. Construction Paving

5.8. Construction Electricity Consumption and Emissions Factors

5.11. Operational Energy Consumption

5.11.1. Unmitigated

5.11.2. Mitigated

8. User Changes to Default Data

1. Basic Project Information

1.1. Basic Project Information

Data Field	Value
Project Name	Garvey - Pump Station
Construction Start Date	1/1/2034
Operational Year	2035
Lead Agency	—
Land Use Scale	Project/site
Analysis Level for Defaults	County
Windspeed (m/s)	0.50
Precipitation (days)	18.2
Location	1061 S Orange Ave, Monterey Park, CA 91755, USA
County	Los Angeles-South Coast
City	Monterey Park
Air District	South Coast AQMD
Air Basin	South Coast
TAZ	4170
EDFZ	7
Electric Utility	Southern California Edison
Gas Utility	Southern California Gas
App Version	2022.1.1.21

1.2. Land Use Types

Land Use Subtype	Size	Unit	Lot Acreage	Building Area (sq ft)	Landscape Area (sq ft)	Special Landscape Area (sq ft)	Population	Description

Other Non-Asphalt Surfaces	1,682	1000sqft	1.00	0.00	0.00	0.00	—	—

1.3. User-Selected Emission Reduction Measures by Emissions Sector

Sector	#	Measure Title
Construction	C-1-A	Use Electric or Hybrid Powered Equipment
Construction	C-5	Use Advanced Engine Tiers

2. Emissions Summary

2.1. Construction Emissions Compared Against Thresholds

Criteria Pollutants (lb/day for daily, ton/yr for annual) and GHGs (lb/day for daily, MT/yr for annual)

Un/Mit.	TOG	ROG	NOx	CO	SO2	PM10E	PM10D	PM10T	PM2.5E	PM2.5D	PM2.5T	BCO2	NBCO2	CO2T	CH4	N2O	R	CO2e
Daily, Summer (Max)	—	—	—	—	—	—	—	—	—	—	—	—	—	—	—	—	—	—
Unmit.	0.51	0.43	3.63	4.89	0.01	0.11	0.43	0.54	0.10	0.10	0.20	—	1,223	1,223	0.04	0.04	0.80	1,238
Mit.	0.11	0.10	1.53	5.43	0.01	0.01	0.43	0.44	0.01	0.10	0.11	—	912	912	0.03	0.04	0.80	925
% Reduced	78%	76%	58%	-11%	27%	87%	—	18%	86%	—	44%	—	25%	25%	22%	6%	—	25%
Daily, Winter (Max)	—	—	—	—	—	—	—	—	—	—	—	—	—	—	—	—	—	—
Unmit.	0.51	0.43	3.65	6.33	0.01	0.11	0.43	0.54	0.10	0.10	0.20	—	1,206	1,206	0.04	0.04	0.02	1,220
Mit.	0.11	0.11	1.07	6.79	0.01	0.02	0.43	0.44	0.02	0.10	0.11	—	1,020	1,020	0.04	0.04	0.02	1,023
% Reduced	78%	73%	71%	-7%	—	84%	—	18%	83%	—	44%	—	15%	15%	—	6%	—	16%
Average Daily (Max)	—	—	—	—	—	—	—	—	—	—	—	—	—	—	—	—	—	—

Unmit.	0.30	0.25	1.97	3.71	0.01	0.06	0.18	0.24	0.05	0.04	0.10	—	761	761	0.03	0.02	0.14	767
Mit.	0.08	0.07	0.64	3.46	< 0.005	0.01	0.18	0.19	0.01	0.04	0.05	—	649	649	0.02	0.02	0.14	655
% Reduced	74%	70%	67%	7%	25%	84%	—	20%	82%	—	45%	—	15%	15%	17%	—	—	15%
Annual (Max)	—	—	—	—	—	—	—	—	—	—	—	—	—	—	—	—	—	—
Unmit.	0.05	0.05	0.36	0.68	< 0.005	0.01	0.03	0.04	0.01	0.01	0.02	—	126	126	< 0.005	< 0.005	0.02	127
Mit.	0.01	0.01	0.12	0.63	< 0.005	< 0.005	0.03	0.04	< 0.005	0.01	0.01	—	107	107	< 0.005	< 0.005	0.02	108
% Reduced	74%	70%	67%	7%	25%	84%	—	20%	82%	—	45%	—	15%	15%	17%	5%	—	15%

2.2. Construction Emissions by Year, Unmitigated

Criteria Pollutants (lb/day for daily, ton/yr for annual) and GHGs (lb/day for daily, MT/yr for annual)

Year	TOG	ROG	NOx	CO	SO2	PM10E	PM10D	PM10T	PM2.5E	PM2.5D	PM2.5T	BCO2	NBCO2	CO2T	CH4	N2O	R	CO2e
Daily - Summer (Max)	—	—	—	—	—	—	—	—	—	—	—	—	—	—	—	—	—	—
2034	0.51	0.43	3.63	4.89	0.01	0.11	0.43	0.54	0.10	0.10	0.20	—	1,223	1,223	0.04	0.04	0.80	1,238
2035	0.51	0.42	3.62	4.84	0.01	0.11	0.43	0.54	0.10	0.10	0.20	—	1,214	1,214	0.04	0.04	0.65	1,229
Daily - Winter (Max)	—	—	—	—	—	—	—	—	—	—	—	—	—	—	—	—	—	—
2034	0.51	0.43	3.65	6.33	0.01	0.11	0.43	0.54	0.10	0.10	0.20	—	1,206	1,206	0.04	0.04	0.02	1,220
2035	0.51	0.42	3.64	4.68	0.01	0.11	0.43	0.54	0.10	0.10	0.20	—	1,198	1,198	0.04	0.04	0.02	1,211
Average Daily	—	—	—	—	—	—	—	—	—	—	—	—	—	—	—	—	—	—
2034	0.30	0.25	1.97	3.71	0.01	0.06	0.18	0.24	0.05	0.04	0.10	—	761	761	0.03	0.02	0.14	767
2035	0.18	0.15	1.29	1.67	< 0.005	0.04	0.15	0.19	0.04	0.04	0.07	—	426	426	0.01	0.01	0.10	431
Annual	—	—	—	—	—	—	—	—	—	—	—	—	—	—	—	—	—	—
2034	0.05	0.05	0.36	0.68	< 0.005	0.01	0.03	0.04	0.01	0.01	0.02	—	126	126	< 0.005	< 0.005	0.02	127

2035	0.03	0.03	0.24	0.31	< 0.005	0.01	0.03	0.03	0.01	0.01	0.01	—	70.5	70.5	< 0.005	< 0.005	0.02	71.3

2.3. Construction Emissions by Year, Mitigated

Criteria Pollutants (lb/day for daily, ton/yr for annual) and GHGs (lb/day for daily, MT/yr for annual)

Year	TOG	ROG	NOx	CO	SO2	PM10E	PM10D	PM10T	PM2.5E	PM2.5D	PM2.5T	BCO2	NBCO2	CO2T	CH4	N2O	R	CO2e
Daily - Summer (Max)	—	—	—	—	—	—	—	—	—	—	—	—	—	—	—	—	—	—
2034	0.11	0.10	1.53	5.43	0.01	0.01	0.43	0.44	0.01	0.10	0.11	—	912	912	0.03	0.04	0.80	925
2035	0.11	0.10	0.47	3.63	0.01	0.01	0.43	0.44	0.01	0.10	0.11	—	904	904	0.03	0.04	0.65	917
Daily - Winter (Max)	—	—	—	—	—	—	—	—	—	—	—	—	—	—	—	—	—	—
2034	0.11	0.11	1.07	6.79	0.01	0.02	0.43	0.44	0.02	0.10	0.11	—	1,020	1,020	0.04	0.04	0.02	1,023
2035	0.11	0.10	0.49	3.47	0.01	0.01	0.43	0.44	0.01	0.10	0.11	—	887	887	0.03	0.04	0.02	899
Average Daily	—	—	—	—	—	—	—	—	—	—	—	—	—	—	—	—	—	—
2034	0.08	0.07	0.64	3.46	< 0.005	0.01	0.18	0.19	0.01	0.04	0.05	—	649	649	0.02	0.02	0.14	655
2035	0.04	0.03	0.17	1.24	< 0.005	< 0.005	0.15	0.16	< 0.005	0.04	0.04	—	316	316	0.01	0.01	0.10	320
Annual	—	—	—	—	—	—	—	—	—	—	—	—	—	—	—	—	—	—
2034	0.01	0.01	0.12	0.63	< 0.005	< 0.005	0.03	0.04	< 0.005	0.01	0.01	—	107	107	< 0.005	< 0.005	0.02	108
2035	0.01	0.01	0.03	0.23	< 0.005	< 0.005	0.03	0.03	< 0.005	0.01	0.01	—	52.3	52.3	< 0.005	< 0.005	0.02	53.0

2.4. Operations Emissions Compared Against Thresholds

Criteria Pollutants (lb/day for daily, ton/yr for annual) and GHGs (lb/day for daily, MT/yr for annual)

Un/Mit.	TOG	ROG	NOx	CO	SO2	PM10E	PM10D	PM10T	PM2.5E	PM2.5D	PM2.5T	BCO2	NBCO2	CO2T	CH4	N2O	R	CO2e
Daily, Summer (Max)	—	—	—	—	—	—	—	—	—	—	—	—	—	—	—	—	—	—

Unmit.	0.00	< 0.005	0.00	0.00	0.00	0.00	0.00	0.00	0.00	0.00	0.00	0.00	656	656	0.04	< 0.005	0.00	658
Daily, Winter (Max)	—	—	—	—	—	—	—	—	—	—	—	—	—	—	—	—	—	—
Unmit.	0.00	< 0.005	0.00	0.00	0.00	0.00	0.00	0.00	0.00	0.00	0.00	0.00	656	656	0.04	< 0.005	0.00	658
Average Daily (Max)	—	—	—	—	—	—	—	—	—	—	—	—	—	—	—	—	—	—
Unmit.	0.00	< 0.005	0.00	0.00	0.00	0.00	0.00	0.00	0.00	0.00	0.00	0.00	656	656	0.04	< 0.005	0.00	658
Annual (Max)	—	—	—	—	—	—	—	—	—	—	—	—	—	—	—	—	—	—
Unmit.	0.00	< 0.005	0.00	0.00	0.00	0.00	0.00	0.00	0.00	0.00	0.00	0.00	109	109	0.01	< 0.005	0.00	109

2.5. Operations Emissions by Sector, Unmitigated

Criteria Pollutants (lb/day for daily, ton/yr for annual) and GHGs (lb/day for daily, MT/yr for annual)

Sector	TOG	ROG	NOx	CO	SO2	PM10E	PM10D	PM10T	PM2.5E	PM2.5D	PM2.5T	BCO2	NBCO2	CO2T	CH4	N2O	R	CO2e
Daily, Summer (Max)	—	—	—	—	—	—	—	—	—	—	—	—	—	—	—	—	—	—
Mobile	0.00	0.00	0.00	0.00	0.00	0.00	0.00	0.00	0.00	0.00	0.00	—	0.00	0.00	0.00	0.00	0.00	0.00
Area	—	< 0.005	—	—	—	—	—	—	—	—	—	—	—	—	—	—	—	—
Energy	0.00	0.00	0.00	0.00	0.00	0.00	—	0.00	0.00	—	0.00	—	656	656	0.04	< 0.005	—	658
Water	—	—	—	—	—	—	—	—	—	—	—	0.00	0.00	0.00	0.00	0.00	—	0.00
Waste	—	—	—	—	—	—	—	—	—	—	—	0.00	0.00	0.00	0.00	0.00	—	0.00
Total	0.00	< 0.005	0.00	0.00	0.00	0.00	0.00	0.00	0.00	0.00	0.00	0.00	656	656	0.04	< 0.005	0.00	658
Daily, Winter (Max)	—	—	—	—	—	—	—	—	—	—	—	—	—	—	—	—	—	—
Mobile	0.00	0.00	0.00	0.00	0.00	0.00	0.00	0.00	0.00	0.00	0.00	—	0.00	0.00	0.00	0.00	0.00	0.00
Area	—	< 0.005	—	—	—	—	—	—	—	—	—	—	—	—	—	—	—	—

Energy	0.00	0.00	0.00	0.00	0.00	0.00	—	0.00	0.00	—	0.00	—	656	656	0.04	< 0.005	—	658
Water	—	—	—	—	—	—	—	—	—	—	—	0.00	0.00	0.00	0.00	0.00	—	0.00
Waste	—	—	—	—	—	—	—	—	—	—	—	0.00	0.00	0.00	0.00	0.00	—	0.00
Total	0.00	< 0.005	0.00	0.00	0.00	0.00	0.00	0.00	0.00	0.00	0.00	0.00	656	656	0.04	< 0.005	0.00	658
Average Daily	—	—	—	—	—	—	—	—	—	—	—	—	—	—	—	—	—	—
Mobile	0.00	0.00	0.00	0.00	0.00	0.00	0.00	0.00	0.00	0.00	0.00	—	0.00	0.00	0.00	0.00	0.00	0.00
Area	—	< 0.005	—	—	—	—	—	—	—	—	—	—	—	—	—	—	—	—
Energy	0.00	0.00	0.00	0.00	0.00	0.00	—	0.00	0.00	—	0.00	—	656	656	0.04	< 0.005	—	658
Water	—	—	—	—	—	—	—	—	—	—	—	0.00	0.00	0.00	0.00	0.00	—	0.00
Waste	—	—	—	—	—	—	—	—	—	—	—	0.00	0.00	0.00	0.00	0.00	—	0.00
Total	0.00	< 0.005	0.00	0.00	0.00	0.00	0.00	0.00	0.00	0.00	0.00	0.00	656	656	0.04	< 0.005	0.00	658
Annual	—	—	—	—	—	—	—	—	—	—	—	—	—	—	—	—	—	—
Mobile	0.00	0.00	0.00	0.00	0.00	0.00	0.00	0.00	0.00	0.00	0.00	—	0.00	0.00	0.00	0.00	0.00	0.00
Area	—	< 0.005	—	—	—	—	—	—	—	—	—	—	—	—	—	—	—	—
Energy	0.00	0.00	0.00	0.00	0.00	0.00	—	0.00	0.00	—	0.00	—	109	109	0.01	< 0.005	—	109
Water	—	—	—	—	—	—	—	—	—	—	—	0.00	0.00	0.00	0.00	0.00	—	0.00
Waste	—	—	—	—	—	—	—	—	—	—	—	0.00	0.00	0.00	0.00	0.00	—	0.00
Total	0.00	< 0.005	0.00	0.00	0.00	0.00	0.00	0.00	0.00	0.00	0.00	0.00	109	109	0.01	< 0.005	0.00	109

2.6. Operations Emissions by Sector, Mitigated

Criteria Pollutants (lb/day for daily, ton/yr for annual) and GHGs (lb/day for daily, MT/yr for annual)

Sector	TOG	ROG	NOx	CO	SO2	PM10E	PM10D	PM10T	PM2.5E	PM2.5D	PM2.5T	BCO2	NBCO2	CO2T	CH4	N2O	R	CO2e
Daily, Summer (Max)	—	—	—	—	—	—	—	—	—	—	—	—	—	—	—	—	—	—
Mobile	0.00	0.00	0.00	0.00	0.00	0.00	0.00	0.00	0.00	0.00	0.00	—	0.00	0.00	0.00	0.00	0.00	0.00
Area	—	< 0.005	—	—	—	—	—	—	—	—	—	—	—	—	—	—	—	—

Energy	0.00	0.00	0.00	0.00	0.00	0.00	—	0.00	0.00	—	0.00	—	656	656	0.04	< 0.005	—	658
Water	—	—	—	—	—	—	—	—	—	—	—	0.00	0.00	0.00	0.00	0.00	—	0.00
Waste	—	—	—	—	—	—	—	—	—	—	—	0.00	0.00	0.00	0.00	0.00	—	0.00
Total	0.00	< 0.005	0.00	0.00	0.00	0.00	0.00	0.00	0.00	0.00	0.00	0.00	656	656	0.04	< 0.005	0.00	658
Daily, Winter (Max)	—	—	—	—	—	—	—	—	—	—	—	—	—	—	—	—	—	—
Mobile	0.00	0.00	0.00	0.00	0.00	0.00	0.00	0.00	0.00	0.00	0.00	—	0.00	0.00	0.00	0.00	0.00	0.00
Area	—	< 0.005	—	—	—	—	—	—	—	—	—	—	—	—	—	—	—	—
Energy	0.00	0.00	0.00	0.00	0.00	0.00	—	0.00	0.00	—	0.00	—	656	656	0.04	< 0.005	—	658
Water	—	—	—	—	—	—	—	—	—	—	—	0.00	0.00	0.00	0.00	0.00	—	0.00
Waste	—	—	—	—	—	—	—	—	—	—	—	0.00	0.00	0.00	0.00	0.00	—	0.00
Total	0.00	< 0.005	0.00	0.00	0.00	0.00	0.00	0.00	0.00	0.00	0.00	0.00	656	656	0.04	< 0.005	0.00	658
Average Daily	—	—	—	—	—	—	—	—	—	—	—	—	—	—	—	—	—	—
Mobile	0.00	0.00	0.00	0.00	0.00	0.00	0.00	0.00	0.00	0.00	0.00	—	0.00	0.00	0.00	0.00	0.00	0.00
Area	—	< 0.005	—	—	—	—	—	—	—	—	—	—	—	—	—	—	—	—
Energy	0.00	0.00	0.00	0.00	0.00	0.00	—	0.00	0.00	—	0.00	—	656	656	0.04	< 0.005	—	658
Water	—	—	—	—	—	—	—	—	—	—	—	0.00	0.00	0.00	0.00	0.00	—	0.00
Waste	—	—	—	—	—	—	—	—	—	—	—	0.00	0.00	0.00	0.00	0.00	—	0.00
Total	0.00	< 0.005	0.00	0.00	0.00	0.00	0.00	0.00	0.00	0.00	0.00	0.00	656	656	0.04	< 0.005	0.00	658
Annual	—	—	—	—	—	—	—	—	—	—	—	—	—	—	—	—	—	—
Mobile	0.00	0.00	0.00	0.00	0.00	0.00	0.00	0.00	0.00	0.00	0.00	—	0.00	0.00	0.00	0.00	0.00	0.00
Area	—	< 0.005	—	—	—	—	—	—	—	—	—	—	—	—	—	—	—	—
Energy	0.00	0.00	0.00	0.00	0.00	0.00	—	0.00	0.00	—	0.00	—	109	109	0.01	< 0.005	—	109
Water	—	—	—	—	—	—	—	—	—	—	—	0.00	0.00	0.00	0.00	0.00	—	0.00
Waste	—	—	—	—	—	—	—	—	—	—	—	0.00	0.00	0.00	0.00	0.00	—	0.00
Total	0.00	< 0.005	0.00	0.00	0.00	0.00	0.00	0.00	0.00	0.00	0.00	0.00	109	109	0.01	< 0.005	0.00	109

3. Construction Emissions Details

3.1. Site Prep (2034) - Unmitigated

Criteria Pollutants (lb/day for daily, ton/yr for annual) and GHGs (lb/day for daily, MT/yr for annual)

Location	TOG	ROG	NOx	CO	SO2	PM10E	PM10D	PM10T	PM2.5E	PM2.5D	PM2.5T	BCO2	NBCO2	CO2T	CH4	N2O	R	CO2e
Onsite	—	—	—	—	—	—	—	—	—	—	—	—	—	—	—	—	—	—
Daily, Summer (Max)	—	—	—	—	—	—	—	—	—	—	—	—	—	—	—	—	—	—
Daily, Winter (Max)	—	—	—	—	—	—	—	—	—	—	—	—	—	—	—	—	—	—
Off-Road Equipment	0.37	0.31	2.30	6.08	0.01	0.06	—	0.06	0.05	—	0.05	—	934	934	0.04	0.01	—	937
Dust From Material Movement	—	—	—	—	—	—	0.00	0.00	—	0.00	0.00	—	—	—	—	—	—	—
Onsite truck	0.00	0.00	0.00	0.00	0.00	0.00	0.00	0.00	0.00	0.00	0.00	—	0.00	0.00	0.00	0.00	0.00	0.00
Average Daily	—	—	—	—	—	—	—	—	—	—	—	—	—	—	—	—	—	—
Off-Road Equipment	0.07	0.05	0.41	1.08	< 0.005	0.01	—	0.01	0.01	—	0.01	—	166	166	0.01	< 0.005	—	167
Dust From Material Movement	—	—	—	—	—	—	0.00	0.00	—	0.00	0.00	—	—	—	—	—	—	—
Onsite truck	0.00	0.00	0.00	0.00	0.00	0.00	0.00	0.00	0.00	0.00	0.00	—	0.00	0.00	0.00	0.00	0.00	0.00
Annual	—	—	—	—	—	—	—	—	—	—	—	—	—	—	—	—	—	—
Off-Road Equipment	0.01	0.01	0.07	0.20	< 0.005	< 0.005	—	< 0.005	< 0.005	—	< 0.005	—	27.5	27.5	< 0.005	< 0.005	—	27.6

Dust From Material Movement	—	—	—	—	—	—	0.00	0.00	—	0.00	0.00	—	—	—	—	—	—	—
Onsite truck	0.00	0.00	0.00	0.00	0.00	0.00	0.00	0.00	0.00	0.00	0.00	—	0.00	0.00	0.00	0.00	0.00	0.00
Offsite	—	—	—	—	—	—	—	—	—	—	—	—	—	—	—	—	—	—
Daily, Summer (Max)	—	—	—	—	—	—	—	—	—	—	—	—	—	—	—	—	—	—
Daily, Winter (Max)	—	—	—	—	—	—	—	—	—	—	—	—	—	—	—	—	—	—
Worker	0.02	0.02	0.02	0.25	0.00	0.00	0.10	0.10	0.00	0.02	0.02	—	85.1	85.1	< 0.005	< 0.005	< 0.005	85.2
Vendor	0.00	0.00	0.00	0.00	0.00	0.00	0.00	0.00	0.00	0.00	0.00	—	0.00	0.00	0.00	0.00	0.00	0.00
Hauling	0.00	0.00	0.00	0.00	0.00	0.00	0.00	0.00	0.00	0.00	0.00	—	0.00	0.00	0.00	0.00	0.00	0.00
Average Daily	—	—	—	—	—	—	—	—	—	—	—	—	—	—	—	—	—	—
Worker	< 0.005	< 0.005	< 0.005	0.05	0.00	0.00	0.02	0.02	0.00	< 0.005	< 0.005	—	15.4	15.4	< 0.005	< 0.005	0.01	15.4
Vendor	0.00	0.00	0.00	0.00	0.00	0.00	0.00	0.00	0.00	0.00	0.00	—	0.00	0.00	0.00	0.00	0.00	0.00
Hauling	0.00	0.00	0.00	0.00	0.00	0.00	0.00	0.00	0.00	0.00	0.00	—	0.00	0.00	0.00	0.00	0.00	0.00
Annual	—	—	—	—	—	—	—	—	—	—	—	—	—	—	—	—	—	—
Worker	< 0.005	< 0.005	< 0.005	0.01	0.00	0.00	< 0.005	< 0.005	0.00	< 0.005	< 0.005	—	2.54	2.54	< 0.005	< 0.005	< 0.005	2.55
Vendor	0.00	0.00	0.00	0.00	0.00	0.00	0.00	0.00	0.00	0.00	0.00	—	0.00	0.00	0.00	0.00	0.00	0.00
Hauling	0.00	0.00	0.00	0.00	0.00	0.00	0.00	0.00	0.00	0.00	0.00	—	0.00	0.00	0.00	0.00	0.00	0.00

3.2. Site Prep (2034) - Mitigated

Criteria Pollutants (lb/day for daily, ton/yr for annual) and GHGs (lb/day for daily, MT/yr for annual)

Location	TOG	ROG	NOx	CO	SO2	PM10E	PM10D	PM10T	PM2.5E	PM2.5D	PM2.5T	BCO2	NBCO2	CO2T	CH4	N2O	R	CO2e
Onsite	—	—	—	—	—	—	—	—	—	—	—	—	—	—	—	—	—	—

Daily, Summer (Max)	—	—	—	—	—	—	—	—	—	—	—	—	—	—	—	—	—	—
Daily, Winter (Max)	—	—	—	—	—	—	—	—	—	—	—	—	—	—	—	—	—	—
Off-Road Equipment	0.10	0.10	1.05	6.54	0.01	0.02	—	0.02	0.02	—	0.02	—	934	934	0.04	0.01	—	937
Dust From Material Movement	—	—	—	—	—	—	0.00	0.00	—	0.00	0.00	—	—	—	—	—	—	—
Onsite truck	0.00	0.00	0.00	0.00	0.00	0.00	0.00	0.00	0.00	0.00	0.00	—	0.00	0.00	0.00	0.00	0.00	0.00
Average Daily	—	—	—	—	—	—	—	—	—	—	—	—	—	—	—	—	—	—
Off-Road Equipment	0.02	0.02	0.19	1.16	< 0.005	< 0.005	—	< 0.005	< 0.005	—	< 0.005	—	166	166	0.01	< 0.005	—	167
Dust From Material Movement	—	—	—	—	—	—	0.00	0.00	—	0.00	0.00	—	—	—	—	—	—	—
Onsite truck	0.00	0.00	0.00	0.00	0.00	0.00	0.00	0.00	0.00	0.00	0.00	—	0.00	0.00	0.00	0.00	0.00	0.00
Annual	—	—	—	—	—	—	—	—	—	—	—	—	—	—	—	—	—	—
Off-Road Equipment	< 0.005	< 0.005	0.03	0.21	< 0.005	< 0.005	—	< 0.005	< 0.005	—	< 0.005	—	27.5	27.5	< 0.005	< 0.005	—	27.6
Dust From Material Movement	—	—	—	—	—	—	0.00	0.00	—	0.00	0.00	—	—	—	—	—	—	—
Onsite truck	0.00	0.00	0.00	0.00	0.00	0.00	0.00	0.00	0.00	0.00	0.00	—	0.00	0.00	0.00	0.00	0.00	0.00
Offsite	—	—	—	—	—	—	—	—	—	—	—	—	—	—	—	—	—	—

Daily, Summer (Max)	—	—	—	—	—	—	—	—	—	—	—	—	—	—	—	—	—	—
Daily, Winter (Max)	—	—	—	—	—	—	—	—	—	—	—	—	—	—	—	—	—	—
Worker	0.02	0.02	0.02	0.25	0.00	0.00	0.10	0.10	0.00	0.02	0.02	—	85.1	85.1	< 0.005	< 0.005	< 0.005	85.2
Vendor	0.00	0.00	0.00	0.00	0.00	0.00	0.00	0.00	0.00	0.00	0.00	—	0.00	0.00	0.00	0.00	0.00	0.00
Hauling	0.00	0.00	0.00	0.00	0.00	0.00	0.00	0.00	0.00	0.00	0.00	—	0.00	0.00	0.00	0.00	0.00	0.00
Average Daily	—	—	—	—	—	—	—	—	—	—	—	—	—	—	—	—	—	—
Worker	< 0.005	< 0.005	< 0.005	0.05	0.00	0.00	0.02	0.02	0.00	< 0.005	< 0.005	—	15.4	15.4	< 0.005	< 0.005	0.01	15.4
Vendor	0.00	0.00	0.00	0.00	0.00	0.00	0.00	0.00	0.00	0.00	0.00	—	0.00	0.00	0.00	0.00	0.00	0.00
Hauling	0.00	0.00	0.00	0.00	0.00	0.00	0.00	0.00	0.00	0.00	0.00	—	0.00	0.00	0.00	0.00	0.00	0.00
Annual	—	—	—	—	—	—	—	—	—	—	—	—	—	—	—	—	—	—
Worker	< 0.005	< 0.005	< 0.005	0.01	0.00	0.00	< 0.005	< 0.005	0.00	< 0.005	< 0.005	—	2.54	2.54	< 0.005	< 0.005	< 0.005	2.55
Vendor	0.00	0.00	0.00	0.00	0.00	0.00	0.00	0.00	0.00	0.00	0.00	—	0.00	0.00	0.00	0.00	0.00	0.00
Hauling	0.00	0.00	0.00	0.00	0.00	0.00	0.00	0.00	0.00	0.00	0.00	—	0.00	0.00	0.00	0.00	0.00	0.00

3.3. Grading (2034) - Unmitigated

Criteria Pollutants (lb/day for daily, ton/yr for annual) and GHGs (lb/day for daily, MT/yr for annual)

Location	TOG	ROG	NOx	CO	SO2	PM10E	PM10D	PM10T	PM2.5E	PM2.5D	PM2.5T	BCO2	NBCO2	CO2T	CH4	N2O	R	CO2e
Onsite	—	—	—	—	—	—	—	—	—	—	—	—	—	—	—	—	—	—
Daily, Summer (Max)	—	—	—	—	—	—	—	—	—	—	—	—	—	—	—	—	—	—
Off-Road Equipment	0.25	0.21	1.37	4.67	0.01	0.05	—	0.05	0.04	—	0.04	—	747	747	0.03	0.01	—	750

Dust From Material Movement	—	—	—	—	—	—	0.00	0.00	—	0.00	0.00	—	—	—	—	—	—	—
Onsite truck	0.00	0.00	0.00	0.00	0.00	0.00	0.00	0.00	0.00	0.00	0.00	—	0.00	0.00	0.00	0.00	0.00	0.00
Daily, Winter (Max)	—	—	—	—	—	—	—	—	—	—	—	—	—	—	—	—	—	—
Average Daily	—	—	—	—	—	—	—	—	—	—	—	—	—	—	—	—	—	—
Off-Road Equipment	0.04	0.04	0.24	0.83	< 0.005	0.01	—	0.01	0.01	—	0.01	—	133	133	0.01	< 0.005	—	134
Dust From Material Movement	—	—	—	—	—	—	0.00	0.00	—	0.00	0.00	—	—	—	—	—	—	—
Onsite truck	0.00	0.00	0.00	0.00	0.00	0.00	0.00	0.00	0.00	0.00	0.00	—	0.00	0.00	0.00	0.00	0.00	0.00
Annual	—	—	—	—	—	—	—	—	—	—	—	—	—	—	—	—	—	—
Off-Road Equipment	0.01	0.01	0.04	0.15	< 0.005	< 0.005	—	< 0.005	< 0.005	—	< 0.005	—	22.0	22.0	< 0.005	< 0.005	—	22.1
Dust From Material Movement	—	—	—	—	—	—	0.00	0.00	—	0.00	0.00	—	—	—	—	—	—	—
Onsite truck	0.00	0.00	0.00	0.00	0.00	0.00	0.00	0.00	0.00	0.00	0.00	—	0.00	0.00	0.00	0.00	0.00	0.00
Offsite	—	—	—	—	—	—	—	—	—	—	—	—	—	—	—	—	—	—
Daily, Summer (Max)	—	—	—	—	—	—	—	—	—	—	—	—	—	—	—	—	—	—
Worker	0.01	0.01	0.01	0.19	0.00	0.00	0.07	0.07	0.00	0.02	0.02	—	59.8	59.8	< 0.005	< 0.005	0.09	60.0
Vendor	0.00	0.00	0.00	0.00	0.00	0.00	0.00	0.00	0.00	0.00	0.00	—	0.00	0.00	0.00	0.00	0.00	0.00
Hauling	0.00	0.00	0.00	0.00	0.00	0.00	0.00	0.00	0.00	0.00	0.00	—	0.00	0.00	0.00	0.00	0.00	0.00

Daily, Winter (Max)	—	—	—	—	—	—	—	—	—	—	—	—	—	—	—	—	—	—
Average Daily	—	—	—	—	—	—	—	—	—	—	—	—	—	—	—	—	—	—
Worker	< 0.005	< 0.005	< 0.005	0.03	0.00	0.00	0.01	0.01	0.00	< 0.005	< 0.005	—	10.2	10.2	< 0.005	< 0.005	0.01	10.3
Vendor	0.00	0.00	0.00	0.00	0.00	0.00	0.00	0.00	0.00	0.00	0.00	—	0.00	0.00	0.00	0.00	0.00	0.00
Hauling	0.00	0.00	0.00	0.00	0.00	0.00	0.00	0.00	0.00	0.00	0.00	—	0.00	0.00	0.00	0.00	0.00	0.00
Annual	—	—	—	—	—	—	—	—	—	—	—	—	—	—	—	—	—	—
Worker	< 0.005	< 0.005	< 0.005	0.01	0.00	0.00	< 0.005	< 0.005	0.00	< 0.005	< 0.005	—	1.70	1.70	< 0.005	< 0.005	< 0.005	1.70
Vendor	0.00	0.00	0.00	0.00	0.00	0.00	0.00	0.00	0.00	0.00	0.00	—	0.00	0.00	0.00	0.00	0.00	0.00
Hauling	0.00	0.00	0.00	0.00	0.00	0.00	0.00	0.00	0.00	0.00	0.00	—	0.00	0.00	0.00	0.00	0.00	0.00

3.4. Grading (2034) - Mitigated

Criteria Pollutants (lb/day for daily, ton/yr for annual) and GHGs (lb/day for daily, MT/yr for annual)

Location	TOG	ROG	NOx	CO	SO2	PM10E	PM10D	PM10T	PM2.5E	PM2.5D	PM2.5T	BCO2	NBCO2	CO2T	CH4	N2O	R	CO2e
Onsite	—	—	—	—	—	—	—	—	—	—	—	—	—	—	—	—	—	—
Daily, Summer (Max)	—	—	—	—	—	—	—	—	—	—	—	—	—	—	—	—	—	—
Off-Road Equipment	0.09	0.09	1.52	5.24	0.01	0.01	—	0.01	0.01	—	0.01	—	747	747	0.03	0.01	—	750
Dust From Material Movement	—	—	—	—	—	—	0.00	0.00	—	0.00	0.00	—	—	—	—	—	—	—
Onsite truck	0.00	0.00	0.00	0.00	0.00	0.00	0.00	0.00	0.00	0.00	0.00	—	0.00	0.00	0.00	0.00	0.00	0.00
Daily, Winter (Max)	—	—	—	—	—	—	—	—	—	—	—	—	—	—	—	—	—	—

Average Daily	—	—	—	—	—	—	—	—	—	—	—	—	—	—	—	—	—	—
Off-Road Equipment	0.02	0.02	0.27	0.93	< 0.005	< 0.005	—	< 0.005	< 0.005	—	< 0.005	—	133	133	0.01	< 0.005	—	134
Dust From Material Movement	—	—	—	—	—	—	0.00	0.00	—	0.00	0.00	—	—	—	—	—	—	—
Onsite truck	0.00	0.00	0.00	0.00	0.00	0.00	0.00	0.00	0.00	0.00	0.00	—	0.00	0.00	0.00	0.00	0.00	0.00
Annual	—	—	—	—	—	—	—	—	—	—	—	—	—	—	—	—	—	—
Off-Road Equipment	< 0.005	< 0.005	0.05	0.17	< 0.005	< 0.005	—	< 0.005	< 0.005	—	< 0.005	—	22.0	22.0	< 0.005	< 0.005	—	22.1
Dust From Material Movement	—	—	—	—	—	—	0.00	0.00	—	0.00	0.00	—	—	—	—	—	—	—
Onsite truck	0.00	0.00	0.00	0.00	0.00	0.00	0.00	0.00	0.00	0.00	0.00	—	0.00	0.00	0.00	0.00	0.00	0.00
Offsite	—	—	—	—	—	—	—	—	—	—	—	—	—	—	—	—	—	—
Daily, Summer (Max)	—	—	—	—	—	—	—	—	—	—	—	—	—	—	—	—	—	—
Worker	0.01	0.01	0.01	0.19	0.00	0.00	0.07	0.07	0.00	0.02	0.02	—	59.8	59.8	< 0.005	< 0.005	0.09	60.0
Vendor	0.00	0.00	0.00	0.00	0.00	0.00	0.00	0.00	0.00	0.00	0.00	—	0.00	0.00	0.00	0.00	0.00	0.00
Hauling	0.00	0.00	0.00	0.00	0.00	0.00	0.00	0.00	0.00	0.00	0.00	—	0.00	0.00	0.00	0.00	0.00	0.00
Daily, Winter (Max)	—	—	—	—	—	—	—	—	—	—	—	—	—	—	—	—	—	—
Average Daily	—	—	—	—	—	—	—	—	—	—	—	—	—	—	—	—	—	—
Worker	< 0.005	< 0.005	< 0.005	0.03	0.00	0.00	0.01	0.01	0.00	< 0.005	< 0.005	—	10.2	10.2	< 0.005	< 0.005	0.01	10.3
Vendor	0.00	0.00	0.00	0.00	0.00	0.00	0.00	0.00	0.00	0.00	0.00	—	0.00	0.00	0.00	0.00	0.00	0.00

Hauling	0.00	0.00	0.00	0.00	0.00	0.00	0.00	0.00	0.00	0.00	0.00	—	0.00	0.00	0.00	0.00	0.00	0.00
Annual	—	—	—	—	—	—	—	—	—	—	—	—	—	—	—	—	—	—
Worker	< 0.005	< 0.005	< 0.005	0.01	0.00	0.00	< 0.005	< 0.005	0.00	< 0.005	< 0.005	—	1.70	1.70	< 0.005	< 0.005	< 0.005	1.70
Vendor	0.00	0.00	0.00	0.00	0.00	0.00	0.00	0.00	0.00	0.00	0.00	—	0.00	0.00	0.00	0.00	0.00	0.00
Hauling	0.00	0.00	0.00	0.00	0.00	0.00	0.00	0.00	0.00	0.00	0.00	—	0.00	0.00	0.00	0.00	0.00	0.00

3.5. Infrastructure Installation (2034) - Unmitigated

Criteria Pollutants (lb/day for daily, ton/yr for annual) and GHGs (lb/day for daily, MT/yr for annual)

Location	TOG	ROG	NOx	CO	SO2	PM10E	PM10D	PM10T	PM2.5E	PM2.5D	PM2.5T	BCO2	NBCO2	CO2T	CH4	N2O	R	CO2e
Onsite	—	—	—	—	—	—	—	—	—	—	—	—	—	—	—	—	—	—
Daily, Summer (Max)	—	—	—	—	—	—	—	—	—	—	—	—	—	—	—	—	—	—
Off-Road Equipment	0.43	0.36	3.33	3.72	0.01	0.10	—	0.10	0.10	—	0.10	—	670	670	0.03	0.01	—	672
Onsite truck	0.00	0.00	0.00	0.00	0.00	0.00	0.00	0.00	0.00	0.00	0.00	—	0.00	0.00	0.00	0.00	0.00	0.00
Daily, Winter (Max)	—	—	—	—	—	—	—	—	—	—	—	—	—	—	—	—	—	—
Off-Road Equipment	0.43	0.36	3.33	3.72	0.01	0.10	—	0.10	0.10	—	0.10	—	670	670	0.03	0.01	—	672
Onsite truck	0.00	0.00	0.00	0.00	0.00	0.00	0.00	0.00	0.00	0.00	0.00	—	0.00	0.00	0.00	0.00	0.00	0.00
Average Daily	—	—	—	—	—	—	—	—	—	—	—	—	—	—	—	—	—	—
Off-Road Equipment	0.16	0.13	1.20	1.34	< 0.005	0.04	—	0.04	0.03	—	0.03	—	241	241	0.01	< 0.005	—	242
Onsite truck	0.00	0.00	0.00	0.00	0.00	0.00	0.00	0.00	0.00	0.00	0.00	—	0.00	0.00	0.00	0.00	0.00	0.00
Annual	—	—	—	—	—	—	—	—	—	—	—	—	—	—	—	—	—	—

Off-Road Equipment	0.03	0.02	0.22	0.24	< 0.005	0.01	—	0.01	0.01	—	0.01	—	39.9	39.9	< 0.005	< 0.005	—	40.1
Onsite truck	0.00	0.00	0.00	0.00	0.00	0.00	0.00	0.00	0.00	0.00	0.00	—	0.00	0.00	0.00	0.00	0.00	0.00
Offsite	—	—	—	—	—	—	—	—	—	—	—	—	—	—	—	—	—	—
Daily, Summer (Max)	—	—	—	—	—	—	—	—	—	—	—	—	—	—	—	—	—	—
Worker	0.06	0.06	0.05	1.07	0.00	0.00	0.36	0.36	0.00	0.08	0.08	—	329	329	< 0.005	< 0.005	0.49	330
Vendor	0.00	0.00	0.00	0.00	0.00	0.00	0.00	0.00	0.00	0.00	0.00	—	0.00	0.00	0.00	0.00	0.00	0.00
Hauling	0.01	< 0.005	0.25	0.10	< 0.005	< 0.005	0.07	0.08	< 0.005	0.02	0.02	—	224	224	0.01	0.04	0.31	236
Daily, Winter (Max)	—	—	—	—	—	—	—	—	—	—	—	—	—	—	—	—	—	—
Worker	0.06	0.06	0.06	0.91	0.00	0.00	0.36	0.36	0.00	0.08	0.08	—	312	312	< 0.005	< 0.005	0.01	313
Vendor	0.00	0.00	0.00	0.00	0.00	0.00	0.00	0.00	0.00	0.00	0.00	—	0.00	0.00	0.00	0.00	0.00	0.00
Hauling	0.01	< 0.005	0.26	0.10	< 0.005	< 0.005	0.07	0.08	< 0.005	0.02	0.02	—	225	225	0.01	0.04	0.01	236
Average Daily	—	—	—	—	—	—	—	—	—	—	—	—	—	—	—	—	—	—
Worker	0.02	0.02	0.02	0.34	0.00	0.00	0.13	0.13	0.00	0.03	0.03	—	114	114	< 0.005	< 0.005	0.08	114
Vendor	0.00	0.00	0.00	0.00	0.00	0.00	0.00	0.00	0.00	0.00	0.00	—	0.00	0.00	0.00	0.00	0.00	0.00
Hauling	< 0.005	< 0.005	0.09	0.04	< 0.005	< 0.005	0.03	0.03	< 0.005	0.01	0.01	—	80.8	80.8	< 0.005	0.01	0.05	84.9
Annual	—	—	—	—	—	—	—	—	—	—	—	—	—	—	—	—	—	—
Worker	< 0.005	< 0.005	< 0.005	0.06	0.00	0.00	0.02	0.02	0.00	0.01	0.01	—	18.9	18.9	< 0.005	< 0.005	0.01	18.9
Vendor	0.00	0.00	0.00	0.00	0.00	0.00	0.00	0.00	0.00	0.00	0.00	—	0.00	0.00	0.00	0.00	0.00	0.00
Hauling	< 0.005	< 0.005	0.02	0.01	< 0.005	< 0.005	< 0.005	0.01	< 0.005	< 0.005	< 0.005	—	13.4	13.4	< 0.005	< 0.005	0.01	14.1

3.6. Infrastructure Installation (2034) - Mitigated

Criteria Pollutants (lb/day for daily, ton/yr for annual) and GHGs (lb/day for daily, MT/yr for annual)

Location	TOG	ROG	NOx	CO	SO2	PM10E	PM10D	PM10T	PM2.5E	PM2.5D	PM2.5T	BCO2	NBCO2	CO2T	CH4	N2O	R	CO2e

Onsite	—	—	—	—	—	—	—	—	—	—	—	—	—	—	—	—	—	—
Daily, Summer (Max)	—	—	—	—	—	—	—	—	—	—	—	—	—	—	—	—	—	—
Off-Road Equipment	0.03	0.03	0.18	2.51	< 0.005	0.01	—	0.01	0.01	—	0.01	—	358	358	0.01	< 0.005	—	359
Onsite truck	0.00	0.00	0.00	0.00	0.00	0.00	0.00	0.00	0.00	0.00	0.00	—	0.00	0.00	0.00	0.00	0.00	0.00
Daily, Winter (Max)	—	—	—	—	—	—	—	—	—	—	—	—	—	—	—	—	—	—
Off-Road Equipment	0.03	0.03	0.18	2.51	< 0.005	0.01	—	0.01	0.01	—	0.01	—	358	358	0.01	< 0.005	—	359
Onsite truck	0.00	0.00	0.00	0.00	0.00	0.00	0.00	0.00	0.00	0.00	0.00	—	0.00	0.00	0.00	0.00	0.00	0.00
Average Daily	—	—	—	—	—	—	—	—	—	—	—	—	—	—	—	—	—	—
Off-Road Equipment	0.01	0.01	0.06	0.90	< 0.005	< 0.005	—	< 0.005	< 0.005	—	< 0.005	—	129	129	0.01	< 0.005	—	129
Onsite truck	0.00	0.00	0.00	0.00	0.00	0.00	0.00	0.00	0.00	0.00	0.00	—	0.00	0.00	0.00	0.00	0.00	0.00
Annual	—	—	—	—	—	—	—	—	—	—	—	—	—	—	—	—	—	—
Off-Road Equipment	< 0.005	< 0.005	0.01	0.16	< 0.005	< 0.005	—	< 0.005	< 0.005	—	< 0.005	—	21.3	21.3	< 0.005	< 0.005	—	21.4
Onsite truck	0.00	0.00	0.00	0.00	0.00	0.00	0.00	0.00	0.00	0.00	0.00	—	0.00	0.00	0.00	0.00	0.00	0.00
Offsite	—	—	—	—	—	—	—	—	—	—	—	—	—	—	—	—	—	—
Daily, Summer (Max)	—	—	—	—	—	—	—	—	—	—	—	—	—	—	—	—	—	—
Worker	0.06	0.06	0.05	1.07	0.00	0.00	0.36	0.36	0.00	0.08	0.08	—	329	329	< 0.005	< 0.005	0.49	330
Vendor	0.00	0.00	0.00	0.00	0.00	0.00	0.00	0.00	0.00	0.00	0.00	—	0.00	0.00	0.00	0.00	0.00	0.00
Hauling	0.01	< 0.005	0.25	0.10	< 0.005	< 0.005	0.07	0.08	< 0.005	0.02	0.02	—	224	224	0.01	0.04	0.31	236

Daily, Winter (Max)	—	—	—	—	—	—	—	—	—	—	—	—	—	—	—	—	—	—
Worker	0.06	0.06	0.06	0.91	0.00	0.00	0.36	0.36	0.00	0.08	0.08	—	312	312	< 0.005	< 0.005	0.01	313
Vendor	0.00	0.00	0.00	0.00	0.00	0.00	0.00	0.00	0.00	0.00	0.00	—	0.00	0.00	0.00	0.00	0.00	0.00
Hauling	0.01	< 0.005	0.26	0.10	< 0.005	< 0.005	0.07	0.08	< 0.005	0.02	0.02	—	225	225	0.01	0.04	0.01	236
Average Daily	—	—	—	—	—	—	—	—	—	—	—	—	—	—	—	—	—	—
Worker	0.02	0.02	0.02	0.34	0.00	0.00	0.13	0.13	0.00	0.03	0.03	—	114	114	< 0.005	< 0.005	0.08	114
Vendor	0.00	0.00	0.00	0.00	0.00	0.00	0.00	0.00	0.00	0.00	0.00	—	0.00	0.00	0.00	0.00	0.00	0.00
Hauling	< 0.005	< 0.005	0.09	0.04	< 0.005	< 0.005	0.03	0.03	< 0.005	0.01	0.01	—	80.8	80.8	< 0.005	0.01	0.05	84.9
Annual	—	—	—	—	—	—	—	—	—	—	—	—	—	—	—	—	—	—
Worker	< 0.005	< 0.005	< 0.005	0.06	0.00	0.00	0.02	0.02	0.00	0.01	0.01	—	18.9	18.9	< 0.005	< 0.005	0.01	18.9
Vendor	0.00	0.00	0.00	0.00	0.00	0.00	0.00	0.00	0.00	0.00	0.00	—	0.00	0.00	0.00	0.00	0.00	0.00
Hauling	< 0.005	< 0.005	0.02	0.01	< 0.005	< 0.005	< 0.005	0.01	< 0.005	< 0.005	< 0.005	—	13.4	13.4	< 0.005	< 0.005	0.01	14.1

3.7. Infrastructure Installation (2035) - Unmitigated

Criteria Pollutants (lb/day for daily, ton/yr for annual) and GHGs (lb/day for daily, MT/yr for annual)

Location	TOG	ROG	NOx	CO	SO2	PM10E	PM10D	PM10T	PM2.5E	PM2.5D	PM2.5T	BCO2	NBCO2	CO2T	CH4	N2O	R	CO2e
Onsite	—	—	—	—	—	—	—	—	—	—	—	—	—	—	—	—	—	—
Daily, Summer (Max)	—	—	—	—	—	—	—	—	—	—	—	—	—	—	—	—	—	—
Off-Road Equipment	0.43	0.36	3.33	3.72	0.01	0.10	—	0.10	0.10	—	0.10	—	670	670	0.03	0.01	—	672
Onsite truck	0.00	0.00	0.00	0.00	0.00	0.00	0.00	0.00	0.00	0.00	0.00	—	0.00	0.00	0.00	0.00	0.00	0.00
Daily, Winter (Max)	—	—	—	—	—	—	—	—	—	—	—	—	—	—	—	—	—	—

Off-Road Equipment	0.43	0.36	3.33	3.72	0.01	0.10	—	0.10	0.10	—	0.10	—	670	670	0.03	0.01	—	672
Onsite truck	0.00	0.00	0.00	0.00	0.00	0.00	0.00	0.00	0.00	0.00	0.00	—	0.00	0.00	0.00	0.00	0.00	0.00
Average Daily	—	—	—	—	—	—	—	—	—	—	—	—	—	—	—	—	—	—
Off-Road Equipment	0.15	0.13	1.18	1.32	< 0.005	0.04	—	0.04	0.03	—	0.03	—	237	237	0.01	< 0.005	—	238
Onsite truck	0.00	0.00	0.00	0.00	0.00	0.00	0.00	0.00	0.00	0.00	0.00	—	0.00	0.00	0.00	0.00	0.00	0.00
Annual	—	—	—	—	—	—	—	—	—	—	—	—	—	—	—	—	—	—
Off-Road Equipment	0.03	0.02	0.22	0.24	< 0.005	0.01	—	0.01	0.01	—	0.01	—	39.3	39.3	< 0.005	< 0.005	—	39.4
Onsite truck	0.00	0.00	0.00	0.00	0.00	0.00	0.00	0.00	0.00	0.00	0.00	—	0.00	0.00	0.00	0.00	0.00	0.00
Offsite	—	—	—	—	—	—	—	—	—	—	—	—	—	—	—	—	—	—
Daily, Summer (Max)	—	—	—	—	—	—	—	—	—	—	—	—	—	—	—	—	—	—
Worker	0.06	0.06	0.05	1.02	0.00	0.00	0.36	0.36	0.00	0.08	0.08	—	325	325	< 0.005	< 0.005	0.43	326
Vendor	0.00	0.00	0.00	0.00	0.00	0.00	0.00	0.00	0.00	0.00	0.00	—	0.00	0.00	0.00	0.00	0.00	0.00
Hauling	0.01	< 0.005	0.25	0.10	< 0.005	< 0.005	0.07	0.08	< 0.005	0.02	0.02	—	219	219	0.01	0.03	0.22	230
Daily, Winter (Max)	—	—	—	—	—	—	—	—	—	—	—	—	—	—	—	—	—	—
Worker	0.06	0.06	0.06	0.87	0.00	0.00	0.36	0.36	0.00	0.08	0.08	—	309	309	< 0.005	< 0.005	0.01	309
Vendor	0.00	0.00	0.00	0.00	0.00	0.00	0.00	0.00	0.00	0.00	0.00	—	0.00	0.00	0.00	0.00	0.00	0.00
Hauling	0.01	< 0.005	0.26	0.10	< 0.005	< 0.005	0.07	0.08	< 0.005	0.02	0.02	—	220	220	0.01	0.03	0.01	230
Average Daily	—	—	—	—	—	—	—	—	—	—	—	—	—	—	—	—	—	—
Worker	0.02	0.02	0.02	0.32	0.00	0.00	0.13	0.13	0.00	0.03	0.03	—	111	111	< 0.005	< 0.005	0.06	111
Vendor	0.00	0.00	0.00	0.00	0.00	0.00	0.00	0.00	0.00	0.00	0.00	—	0.00	0.00	0.00	0.00	0.00	0.00

Hauling	< 0.005	< 0.005	0.09	0.04	< 0.005	< 0.005	0.03	0.03	< 0.005	0.01	0.01	—	77.8	77.8	< 0.005	0.01	0.03	81.5
Annual	—	—	—	—	—	—	—	—	—	—	—	—	—	—	—	—	—	—
Worker	< 0.005	< 0.005	< 0.005	0.06	0.00	0.00	0.02	0.02	0.00	0.01	0.01	—	18.4	18.4	< 0.005	< 0.005	0.01	18.4
Vendor	0.00	0.00	0.00	0.00	0.00	0.00	0.00	0.00	0.00	0.00	0.00	—	0.00	0.00	0.00	0.00	0.00	0.00
Hauling	< 0.005	< 0.005	0.02	0.01	< 0.005	< 0.005	< 0.005	< 0.005	< 0.005	< 0.005	< 0.005	—	12.9	12.9	< 0.005	< 0.005	0.01	13.5

3.8. Infrastructure Installation (2035) - Mitigated

Criteria Pollutants (lb/day for daily, ton/yr for annual) and GHGs (lb/day for daily, MT/yr for annual)

Location	TOG	ROG	NOx	CO	SO2	PM10E	PM10D	PM10T	PM2.5E	PM2.5D	PM2.5T	BCO2	NBCO2	CO2T	CH4	N2O	R	CO2e
Onsite	—	—	—	—	—	—	—	—	—	—	—	—	—	—	—	—	—	—
Daily, Summer (Max)	—	—	—	—	—	—	—	—	—	—	—	—	—	—	—	—	—	—
Off-Road Equipment	0.03	0.03	0.18	2.51	< 0.005	0.01	—	0.01	0.01	—	0.01	—	358	358	0.01	< 0.005	—	359
Onsite truck	0.00	0.00	0.00	0.00	0.00	0.00	0.00	0.00	0.00	0.00	0.00	—	0.00	0.00	0.00	0.00	0.00	0.00
Daily, Winter (Max)	—	—	—	—	—	—	—	—	—	—	—	—	—	—	—	—	—	—
Off-Road Equipment	0.03	0.03	0.18	2.51	< 0.005	0.01	—	0.01	0.01	—	0.01	—	358	358	0.01	< 0.005	—	359
Onsite truck	0.00	0.00	0.00	0.00	0.00	0.00	0.00	0.00	0.00	0.00	0.00	—	0.00	0.00	0.00	0.00	0.00	0.00
Average Daily	—	—	—	—	—	—	—	—	—	—	—	—	—	—	—	—	—	—
Off-Road Equipment	0.01	0.01	0.06	0.89	< 0.005	< 0.005	—	< 0.005	< 0.005	—	< 0.005	—	127	127	0.01	< 0.005	—	127
Onsite truck	0.00	0.00	0.00	0.00	0.00	0.00	0.00	0.00	0.00	0.00	0.00	—	0.00	0.00	0.00	0.00	0.00	0.00
Annual	—	—	—	—	—	—	—	—	—	—	—	—	—	—	—	—	—	—

Off-Road Equipment	< 0.005	< 0.005	0.01	0.16	< 0.005	< 0.005	—	< 0.005	< 0.005	—	< 0.005	—	21.0	21.0	< 0.005	< 0.005	—	21.1
Onsite truck	0.00	0.00	0.00	0.00	0.00	0.00	0.00	0.00	0.00	0.00	0.00	—	0.00	0.00	0.00	0.00	0.00	0.00
Offsite	—	—	—	—	—	—	—	—	—	—	—	—	—	—	—	—	—	—
Daily, Summer (Max)	—	—	—	—	—	—	—	—	—	—	—	—	—	—	—	—	—	—
Worker	0.06	0.06	0.05	1.02	0.00	0.00	0.36	0.36	0.00	0.08	0.08	—	325	325	< 0.005	< 0.005	0.43	326
Vendor	0.00	0.00	0.00	0.00	0.00	0.00	0.00	0.00	0.00	0.00	0.00	—	0.00	0.00	0.00	0.00	0.00	0.00
Hauling	0.01	< 0.005	0.25	0.10	< 0.005	< 0.005	0.07	0.08	< 0.005	0.02	0.02	—	219	219	0.01	0.03	0.22	230
Daily, Winter (Max)	—	—	—	—	—	—	—	—	—	—	—	—	—	—	—	—	—	—
Worker	0.06	0.06	0.06	0.87	0.00	0.00	0.36	0.36	0.00	0.08	0.08	—	309	309	< 0.005	< 0.005	0.01	309
Vendor	0.00	0.00	0.00	0.00	0.00	0.00	0.00	0.00	0.00	0.00	0.00	—	0.00	0.00	0.00	0.00	0.00	0.00
Hauling	0.01	< 0.005	0.26	0.10	< 0.005	< 0.005	0.07	0.08	< 0.005	0.02	0.02	—	220	220	0.01	0.03	0.01	230
Average Daily	—	—	—	—	—	—	—	—	—	—	—	—	—	—	—	—	—	—
Worker	0.02	0.02	0.02	0.32	0.00	0.00	0.13	0.13	0.00	0.03	0.03	—	111	111	< 0.005	< 0.005	0.06	111
Vendor	0.00	0.00	0.00	0.00	0.00	0.00	0.00	0.00	0.00	0.00	0.00	—	0.00	0.00	0.00	0.00	0.00	0.00
Hauling	< 0.005	< 0.005	0.09	0.04	< 0.005	< 0.005	0.03	0.03	< 0.005	0.01	0.01	—	77.8	77.8	< 0.005	0.01	0.03	81.5
Annual	—	—	—	—	—	—	—	—	—	—	—	—	—	—	—	—	—	—
Worker	< 0.005	< 0.005	< 0.005	0.06	0.00	0.00	0.02	0.02	0.00	0.01	0.01	—	18.4	18.4	< 0.005	< 0.005	0.01	18.4
Vendor	0.00	0.00	0.00	0.00	0.00	0.00	0.00	0.00	0.00	0.00	0.00	—	0.00	0.00	0.00	0.00	0.00	0.00
Hauling	< 0.005	< 0.005	0.02	0.01	< 0.005	< 0.005	< 0.005	< 0.005	< 0.005	< 0.005	< 0.005	—	12.9	12.9	< 0.005	< 0.005	0.01	13.5

4. Operations Emissions Details

4.1. Mobile Emissions by Land Use

4.1.1. Unmitigated

Mobile source emissions results are presented in Sections 2.6. No further detailed breakdown of emissions is available.

4.1.2. Mitigated

Mobile source emissions results are presented in Sections 2.5. No further detailed breakdown of emissions is available.

4.2. Energy

4.2.1. Electricity Emissions By Land Use - Unmitigated

Criteria Pollutants (lb/day for daily, ton/yr for annual) and GHGs (lb/day for daily, MT/yr for annual)

Land Use	TOG	ROG	NOx	CO	SO2	PM10E	PM10D	PM10T	PM2.5E	PM2.5D	PM2.5T	BCO2	NBCO2	CO2T	CH4	N2O	R	CO2e
Daily, Summer (Max)	—	—	—	—	—	—	—	—	—	—	—	—	—	—	—	—	—	—
Other Non-Asphalt Surfaces	—	—	—	—	—	—	—	—	—	—	—	—	656	656	0.04	< 0.005	—	658
Total	—	—	—	—	—	—	—	—	—	—	—	—	656	656	0.04	< 0.005	—	658
Daily, Winter (Max)	—	—	—	—	—	—	—	—	—	—	—	—	—	—	—	—	—	—
Other Non-Asphalt Surfaces	—	—	—	—	—	—	—	—	—	—	—	—	656	656	0.04	< 0.005	—	658
Total	—	—	—	—	—	—	—	—	—	—	—	—	656	656	0.04	< 0.005	—	658
Annual	—	—	—	—	—	—	—	—	—	—	—	—	—	—	—	—	—	—
Other Non-Asphalt Surfaces	—	—	—	—	—	—	—	—	—	—	—	—	109	109	0.01	< 0.005	—	109
Total	—	—	—	—	—	—	—	—	—	—	—	—	109	109	0.01	< 0.005	—	109

4.2.2. Electricity Emissions By Land Use - Mitigated

Criteria Pollutants (lb/day for daily, ton/yr for annual) and GHGs (lb/day for daily, MT/yr for annual)

Land Use	TOG	ROG	NOx	CO	SO2	PM10E	PM10D	PM10T	PM2.5E	PM2.5D	PM2.5T	BCO2	NBCO2	CO2T	CH4	N2O	R	CO2e
Daily, Summer (Max)	—	—	—	—	—	—	—	—	—	—	—	—	—	—	—	—	—	—
Other Non-Asphalt Surfaces	—	—	—	—	—	—	—	—	—	—	—	—	656	656	0.04	< 0.005	—	658
Total	—	—	—	—	—	—	—	—	—	—	—	—	656	656	0.04	< 0.005	—	658
Daily, Winter (Max)	—	—	—	—	—	—	—	—	—	—	—	—	—	—	—	—	—	—
Other Non-Asphalt Surfaces	—	—	—	—	—	—	—	—	—	—	—	—	656	656	0.04	< 0.005	—	658
Total	—	—	—	—	—	—	—	—	—	—	—	—	656	656	0.04	< 0.005	—	658
Annual	—	—	—	—	—	—	—	—	—	—	—	—	—	—	—	—	—	—
Other Non-Asphalt Surfaces	—	—	—	—	—	—	—	—	—	—	—	—	109	109	0.01	< 0.005	—	109
Total	—	—	—	—	—	—	—	—	—	—	—	—	109	109	0.01	< 0.005	—	109

5. Activity Data

5.1. Construction Schedule

Phase Name	Phase Type	Start Date	End Date	Days Per Week	Work Days per Phase	Phase Description
Site Prep	Site Preparation	1/1/2034	3/31/2034	5.00	65.0	—
Grading	Grading	4/1/2034	6/30/2034	5.00	65.0	—
Infrastructure Installation	Building Construction	7/1/2034	6/30/2035	5.00	260	—

5.2. Off-Road Equipment

5.2.1. Unmitigated

Phase Name	Equipment Type	Fuel Type	Engine Tier	Number per Day	Hours Per Day	Horsepower	Load Factor
Site Prep	Tractors/Loaders/Backhoes	Diesel	Average	1.00	8.00	84.0	0.37
Site Prep	Excavators	Diesel	Average	1.00	8.00	36.0	0.38
Site Prep	Rubber Tired Loaders	Diesel	Average	1.00	8.00	150	0.36
Grading	Rubber Tired Loaders	Diesel	Average	1.00	8.00	150	0.36
Grading	Skid Steer Loaders	Diesel	Average	1.00	8.00	71.0	0.37
Infrastructure Installation	Generator Sets	Diesel	Average	3.00	8.00	14.0	0.74
Infrastructure Installation	Rough Terrain Forklifts	Diesel	Average	1.00	8.00	96.0	0.40

5.2.2. Mitigated

Phase Name	Equipment Type	Fuel Type	Engine Tier	Number per Day	Hours Per Day	Horsepower	Load Factor

Site Prep	Tractors/Loaders/Backh	Diesel	Tier 4 Final	1.00	8.00	84.0	0.37
Site Prep	Excavators	Diesel	Tier 4 Final	1.00	8.00	36.0	0.38
Site Prep	Rubber Tired Loaders	Diesel	Tier 4 Final	1.00	8.00	150	0.36
Grading	Rubber Tired Loaders	Diesel	Tier 4 Final	1.00	8.00	150	0.36
Grading	Skid Steer Loaders	Diesel	Tier 4 Final	1.00	8.00	71.0	0.37
Infrastructure Installation	Generator Sets	Electric	Average	3.00	8.00	14.0	0.74
Infrastructure Installation	Rough Terrain Forklifts	Diesel	Tier 4 Final	1.00	8.00	96.0	0.40

5.3. Construction Vehicles

5.3.1. Unmitigated

Phase Name	Trip Type	One-Way Trips per Day	Miles per Trip	Vehicle Mix
Infrastructure Installation	—	—	—	—
Infrastructure Installation	Worker	27.5	18.5	LDA,LDT1,LDT2
Infrastructure Installation	Vendor	0.00	10.2	HHDT,MHDT
Infrastructure Installation	Hauling	4.00	20.0	HHDT
Infrastructure Installation	Onsite truck	0.00	—	HHDT
Site Prep	—	—	—	—
Site Prep	Worker	7.50	18.5	LDA,LDT1,LDT2
Site Prep	Vendor	0.00	10.2	HHDT,MHDT
Site Prep	Hauling	0.00	20.0	HHDT
Site Prep	Onsite truck	0.00	—	HHDT
Grading	—	—	—	—
Grading	Worker	5.00	18.5	LDA,LDT1,LDT2
Grading	Vendor	0.00	10.2	HHDT,MHDT
Grading	Hauling	0.00	20.0	HHDT
Grading	Onsite truck	0.00	—	HHDT

5.3.2. Mitigated

Phase Name	Trip Type	One-Way Trips per Day	Miles per Trip	Vehicle Mix
Infrastructure Installation	—	—	—	—
Infrastructure Installation	Worker	27.5	18.5	LDA,LDT1,LDT2
Infrastructure Installation	Vendor	0.00	10.2	HHDT,MHDT
Infrastructure Installation	Hauling	4.00	20.0	HHDT
Infrastructure Installation	Onsite truck	0.00	—	HHDT
Site Prep	—	—	—	—
Site Prep	Worker	7.50	18.5	LDA,LDT1,LDT2
Site Prep	Vendor	0.00	10.2	HHDT,MHDT
Site Prep	Hauling	0.00	20.0	HHDT
Site Prep	Onsite truck	0.00	—	HHDT
Grading	—	—	—	—
Grading	Worker	5.00	18.5	LDA,LDT1,LDT2
Grading	Vendor	0.00	10.2	HHDT,MHDT
Grading	Hauling	0.00	20.0	HHDT
Grading	Onsite truck	0.00	—	HHDT

5.4. Vehicles

5.4.1. Construction Vehicle Control Strategies

Non-applicable. No control strategies activated by user.

5.5. Architectural Coatings

Phase Name	Residential Interior Area Coated (sq ft)	Residential Exterior Area Coated (sq ft)	Non-Residential Interior Area Coated (sq ft)	Non-Residential Exterior Area Coated (sq ft)	Parking Area Coated (sq ft)

5.6. Dust Mitigation

5.6.1. Construction Earthmoving Activities

Phase Name	Material Imported (Cubic Yards)	Material Exported (Cubic Yards)	Acres Graded (acres)	Material Demolished (sq. ft.)	Acres Paved (acres)
Site Prep	0.00	0.00	0.00	0.00	—
Grading	0.00	0.00	0.00	0.00	—

5.6.2. Construction Earthmoving Control Strategies

Control Strategies Applied	Frequency (per day)	PM10 Reduction	PM2.5 Reduction
Water Exposed Area	3	74%	74%
Water Demolished Area	2	36%	36%

5.7. Construction Paving

Land Use	Area Paved (acres)	% Asphalt
Other Non-Asphalt Surfaces	5.00	0%

5.8. Construction Electricity Consumption and Emissions Factors

kWh per Year and Emission Factor (lb/MWh)

Year	kWh per Year	CO2	CH4	N2O
2034	0.00	532	0.03	< 0.005
2035	0.00	532	0.03	< 0.005

5.11. Operational Energy Consumption

5.11.1. Unmitigated

Electricity (kWh/yr) and CO2 and CH4 and N2O and Natural Gas (kBTU/yr)

Land Use	Electricity (kWh/yr)	CO2	CH4	N2O	Natural Gas (kBTU/yr)
Other Non-Asphalt Surfaces	450,000	532	0.0330	0.0040	0.00

5.11.2. Mitigated

Electricity (kWh/yr) and CO2 and CH4 and N2O and Natural Gas (kBTU/yr)

Land Use	Electricity (kWh/yr)	CO2	CH4	N2O	Natural Gas (kBTU/yr)
Other Non-Asphalt Surfaces	450,000	532	0.0330	0.0040	0.00

8. User Changes to Default Data

Screen	Justification
Construction: Construction Phases	Project Descriptions
Construction: Off-Road Equipment	Based on project information
Construction: Dust From Material Movement	based on project information
Construction: Paving	no paving phase
Construction: Trips and VMT	Project information
Land Use	Site size
Operations: Architectural Coatings	no coating for the pumpstation
Operations: Energy Use	Project Information provided

Miscellaneous Site Upgrades

Garvey - Misc Site Upgrades Detailed Report

Table of Contents

1. Basic Project Information

1.1. Basic Project Information

1.2. Land Use Types

1.3. User-Selected Emission Reduction Measures by Emissions Sector

2. Emissions Summary

2.1. Construction Emissions Compared Against Thresholds

2.2. Construction Emissions by Year, Unmitigated

2.3. Construction Emissions by Year, Mitigated

3. Construction Emissions Details

3.1. Demolition (2025) - Unmitigated

3.2. Demolition (2025) - Mitigated

3.3. Site Prep (2025) - Unmitigated

3.4. Site Prep (2025) - Mitigated

3.5. Site Prep (2026) - Unmitigated

3.6. Site Prep (2026) - Mitigated

3.7. Grading (2026) - Unmitigated

3.8. Grading (2026) - Mitigated

3.9. Infrastructure Installation (2026) - Unmitigated

3.10. Infrastructure Installation (2026) - Mitigated

3.11. Paving/Site Restoration (2026) - Unmitigated

3.12. Paving/Site Restoration (2026) - Mitigated

5. Activity Data

5.1. Construction Schedule

5.2. Off-Road Equipment

5.2.1. Unmitigated

5.2.2. Mitigated

5.3. Construction Vehicles

5.3.1. Unmitigated

5.3.2. Mitigated

5.4. Vehicles

5.4.1. Construction Vehicle Control Strategies

5.5. Architectural Coatings

5.6. Dust Mitigation

5.6.1. Construction Earthmoving Activities

5.6.2. Construction Earthmoving Control Strategies

5.7. Construction Paving

5.8. Construction Electricity Consumption and Emissions Factors

8. User Changes to Default Data

1. Basic Project Information

1.1. Basic Project Information

Data Field	Value
Project Name	Garvey - Misc Site Upgrades
Construction Start Date	9/30/2025
Lead Agency	—
Land Use Scale	Project/site
Analysis Level for Defaults	County
Windspeed (m/s)	0.50
Precipitation (days)	18.2
Location	1061 S Orange Ave, Monterey Park, CA 91755, USA
County	Los Angeles-South Coast
City	Monterey Park
Air District	South Coast AQMD
Air Basin	South Coast
TAZ	4170
EDFZ	7
Electric Utility	Southern California Edison
Gas Utility	Southern California Gas
App Version	2022.1.1.21

1.2. Land Use Types

Land Use Subtype	Size	Unit	Lot Acreage	Building Area (sq ft)	Landscape Area (sq ft)	Special Landscape Area (sq ft)	Population	Description
Other Asphalt Surfaces	6.00	Acre	6.00	0.00	0.00	0.00	—	—

1.3. User-Selected Emission Reduction Measures by Emissions Sector

Sector	#	Measure Title
Construction	C-1-A	Use Electric or Hybrid Powered Equipment
Construction	C-5	Use Advanced Engine Tiers

2. Emissions Summary

2.1. Construction Emissions Compared Against Thresholds

Criteria Pollutants (lb/day for daily, ton/yr for annual) and GHGs (lb/day for daily, MT/yr for annual)

Un/Mit.	TOG	ROG	NOx	CO	SO2	PM10E	PM10D	PM10T	PM2.5E	PM2.5D	PM2.5T	BCO2	NBCO2	CO2T	CH4	N2O	R	CO2e
Daily, Summer (Max)	—	—	—	—	—	—	—	—	—	—	—	—	—	—	—	—	—	—
Unmit.	0.89	0.74	3.93	9.25	0.01	0.13	1.42	1.55	0.12	0.34	0.46	—	2,227	2,227	0.10	0.12	5.50	2,270
Mit.	0.46	0.39	1.10	7.72	0.01	0.01	1.42	1.43	0.01	0.34	0.35	—	1,916	1,916	0.09	0.11	5.50	1,957
% Reduced	48%	48%	72%	17%	20%	90%	—	8%	89%	—	25%	—	14%	14%	13%	2%	—	14%
Daily, Winter (Max)	—	—	—	—	—	—	—	—	—	—	—	—	—	—	—	—	—	—
Unmit.	1.92	1.62	14.1	17.5	0.03	0.82	2.00	2.64	0.76	0.93	1.51	—	3,099	3,099	0.13	0.03	0.01	3,111
Mit.	0.40	0.38	4.14	18.1	0.03	0.07	2.00	2.08	0.07	0.93	1.00	—	3,099	3,099	0.13	0.03	0.01	3,111
% Reduced	79%	77%	71%	-3%	—	91%	—	21%	90%	—	34%	—	> -0.5%	> -0.5%	—	—	—	> -0.5%
Average Daily (Max)	—	—	—	—	—	—	—	—	—	—	—	—	—	—	—	—	—	—
Unmit.	0.78	0.65	4.76	6.57	0.01	0.22	0.76	0.98	0.21	0.23	0.44	—	1,343	1,343	0.06	0.05	0.92	1,360
Mit.	0.25	0.22	1.28	5.97	0.01	0.02	0.76	0.77	0.02	0.23	0.25	—	1,232	1,232	0.05	0.05	0.92	1,248

% Reduced	68%	67%	73%	9%	20%	92%	—	21%	92%	—	43%	—	8%	8%	8%	—	—	8%
Annual (Max)	—	—	—	—	—	—	—	—	—	—	—	—	—	—	—	—	—	—
Unmit.	0.14	0.12	0.87	1.20	< 0.005	0.04	0.14	0.18	0.04	0.04	0.08	—	222	222	0.01	0.01	0.15	225
Mit.	0.04	0.04	0.23	1.09	< 0.005	< 0.005	0.14	0.14	< 0.005	0.04	0.05	—	204	204	0.01	0.01	0.15	207
% Reduced	68%	67%	73%	9%	20%	92%	—	21%	92%	—	43%	—	8%	8%	8%	2%	—	8%

2.2. Construction Emissions by Year, Unmitigated

Criteria Pollutants (lb/day for daily, ton/yr for annual) and GHGs (lb/day for daily, MT/yr for annual)

Year	TOG	ROG	NOx	CO	SO2	PM10E	PM10D	PM10T	PM2.5E	PM2.5D	PM2.5T	BCO2	NBCO2	CO2T	CH4	N2O	R	CO2e
Daily - Summer (Max)	—	—	—	—	—	—	—	—	—	—	—	—	—	—	—	—	—	—
2025	0.41	0.34	2.55	4.56	0.01	0.11	0.10	0.21	0.10	0.03	0.13	—	850	850	0.04	0.03	0.57	861
2026	0.89	0.74	3.93	9.25	0.01	0.13	1.42	1.55	0.12	0.34	0.46	—	2,227	2,227	0.10	0.12	5.50	2,270
Daily - Winter (Max)	—	—	—	—	—	—	—	—	—	—	—	—	—	—	—	—	—	—
2025	0.41	0.34	2.65	5.33	0.01	0.12	0.10	0.21	0.11	0.03	0.13	—	857	857	0.04	0.03	0.01	861
2026	1.92	1.62	14.1	17.5	0.03	0.82	2.00	2.64	0.76	0.93	1.51	—	3,099	3,099	0.13	0.03	0.01	3,111
Average Daily	—	—	—	—	—	—	—	—	—	—	—	—	—	—	—	—	—	—
2025	0.10	0.08	0.62	1.13	< 0.005	0.03	0.02	0.05	0.02	0.01	0.03	—	203	203	0.01	0.01	0.05	205
2026	0.78	0.65	4.76	6.57	0.01	0.22	0.76	0.98	0.21	0.23	0.44	—	1,343	1,343	0.06	0.05	0.92	1,360
Annual	—	—	—	—	—	—	—	—	—	—	—	—	—	—	—	—	—	—
2025	0.02	0.01	0.11	0.21	< 0.005	< 0.005	< 0.005	0.01	< 0.005	< 0.005	0.01	—	33.6	33.6	< 0.005	< 0.005	0.01	33.9
2026	0.14	0.12	0.87	1.20	< 0.005	0.04	0.14	0.18	0.04	0.04	0.08	—	222	222	0.01	0.01	0.15	225

2.3. Construction Emissions by Year, Mitigated

Criteria Pollutants (lb/day for daily, ton/yr for annual) and GHGs (lb/day for daily, MT/yr for annual)

Year	TOG	ROG	NOx	CO	SO2	PM10E	PM10D	PM10T	PM2.5E	PM2.5D	PM2.5T	BCO2	NBCO2	CO2T	CH4	N2O	R	CO2e
Daily - Summer (Max)	—	—	—	—	—	—	—	—	—	—	—	—	—	—	—	—	—	—
2025	0.10	0.09	1.10	4.93	0.01	0.01	0.10	0.12	0.01	0.03	0.04	—	850	850	0.04	0.03	0.57	861
2026	0.46	0.39	0.95	7.72	< 0.005	0.01	1.42	1.43	0.01	0.34	0.35	—	1,916	1,916	0.09	0.11	5.50	1,957
Daily - Winter (Max)	—	—	—	—	—	—	—	—	—	—	—	—	—	—	—	—	—	—
2025	0.10	0.10	1.11	5.85	0.01	0.02	0.10	0.12	0.02	0.03	0.04	—	857	857	0.04	0.03	0.01	861
2026	0.40	0.38	4.14	18.1	0.03	0.07	2.00	2.08	0.07	0.93	1.00	—	3,099	3,099	0.13	0.03	0.01	3,111
Average Daily	—	—	—	—	—	—	—	—	—	—	—	—	—	—	—	—	—	—
2025	0.02	0.02	0.22	1.23	< 0.005	< 0.005	0.02	0.03	< 0.005	0.01	0.01	—	203	203	0.01	0.01	0.05	205
2026	0.25	0.22	1.28	5.97	0.01	0.02	0.76	0.77	0.02	0.23	0.25	—	1,232	1,232	0.05	0.05	0.92	1,248
Annual	—	—	—	—	—	—	—	—	—	—	—	—	—	—	—	—	—	—
2025	< 0.005	< 0.005	0.04	0.22	< 0.005	< 0.005	< 0.005	< 0.005	< 0.005	< 0.005	< 0.005	—	33.6	33.6	< 0.005	< 0.005	0.01	33.9
2026	0.04	0.04	0.23	1.09	< 0.005	< 0.005	0.14	0.14	< 0.005	0.04	0.05	—	204	204	0.01	0.01	0.15	207

3. Construction Emissions Details

3.1. Demolition (2025) - Unmitigated

Criteria Pollutants (lb/day for daily, ton/yr for annual) and GHGs (lb/day for daily, MT/yr for annual)

Location	TOG	ROG	NOx	CO	SO2	PM10E	PM10D	PM10T	PM2.5E	PM2.5D	PM2.5T	BCO2	NBCO2	CO2T	CH4	N2O	R	CO2e
Onsite	—	—	—	—	—	—	—	—	—	—	—	—	—	—	—	—	—	—

Daily, Summer (Max)	—	—	—	—	—	—	—	—	—	—	—	—	—	—	—	—	—	—
Off-Road Equipment	0.37	0.31	2.36	4.14	0.01	0.11	—	0.11	0.10	—	0.10	—	643	643	0.03	0.01	—	645
Demolition	—	—	—	—	—	—	0.00	0.00	—	0.00	0.00	—	—	—	—	—	—	—
Onsite truck	0.00	0.00	0.00	0.00	0.00	0.00	0.00	0.00	0.00	0.00	0.00	—	0.00	0.00	0.00	0.00	0.00	0.00
Daily, Winter (Max)	—	—	—	—	—	—	—	—	—	—	—	—	—	—	—	—	—	—
Off-Road Equipment	0.37	0.31	2.36	4.14	0.01	0.11	—	0.11	0.10	—	0.10	—	643	643	0.03	0.01	—	645
Demolition	—	—	—	—	—	—	0.00	0.00	—	0.00	0.00	—	—	—	—	—	—	—
Onsite truck	0.00	0.00	0.00	0.00	0.00	0.00	0.00	0.00	0.00	0.00	0.00	—	0.00	0.00	0.00	0.00	0.00	0.00
Average Daily	—	—	—	—	—	—	—	—	—	—	—	—	—	—	—	—	—	—
Off-Road Equipment	0.07	0.06	0.42	0.74	< 0.005	0.02	—	0.02	0.02	—	0.02	—	114	114	< 0.005	< 0.005	—	115
Demolition	—	—	—	—	—	—	0.00	0.00	—	0.00	0.00	—	—	—	—	—	—	—
Onsite truck	0.00	0.00	0.00	0.00	0.00	0.00	0.00	0.00	0.00	0.00	0.00	—	0.00	0.00	0.00	0.00	0.00	0.00
Annual	—	—	—	—	—	—	—	—	—	—	—	—	—	—	—	—	—	—
Off-Road Equipment	0.01	0.01	0.08	0.13	< 0.005	< 0.005	—	< 0.005	< 0.005	—	< 0.005	—	19.0	19.0	< 0.005	< 0.005	—	19.0
Demolition	—	—	—	—	—	—	0.00	0.00	—	0.00	0.00	—	—	—	—	—	—	—
Onsite truck	0.00	0.00	0.00	0.00	0.00	0.00	0.00	0.00	0.00	0.00	0.00	—	0.00	0.00	0.00	0.00	0.00	0.00
Offsite	—	—	—	—	—	—	—	—	—	—	—	—	—	—	—	—	—	—

Daily, Summer (Max)	—	—	—	—	—	—	—	—	—	—	—	—	—	—	—	—	—	—
Worker	0.02	0.02	0.02	0.35	0.00	0.00	0.07	0.07	0.00	0.02	0.02	—	69.1	69.1	< 0.005	< 0.005	0.25	70.2
Vendor	0.00	0.00	0.00	0.00	0.00	0.00	0.00	0.00	0.00	0.00	0.00	—	0.00	0.00	0.00	0.00	0.00	0.00
Hauling	0.01	< 0.005	0.17	0.07	< 0.005	< 0.005	0.04	0.04	< 0.005	0.01	0.01	—	139	139	0.01	0.02	0.32	146
Daily, Winter (Max)	—	—	—	—	—	—	—	—	—	—	—	—	—	—	—	—	—	—
Worker	0.02	0.02	0.02	0.29	0.00	0.00	0.07	0.07	0.00	0.02	0.02	—	65.5	65.5	< 0.005	< 0.005	0.01	66.4
Vendor	0.00	0.00	0.00	0.00	0.00	0.00	0.00	0.00	0.00	0.00	0.00	—	0.00	0.00	0.00	0.00	0.00	0.00
Hauling	0.01	< 0.005	0.18	0.07	< 0.005	< 0.005	0.04	0.04	< 0.005	0.01	0.01	—	139	139	0.01	0.02	0.01	145
Average Daily	—	—	—	—	—	—	—	—	—	—	—	—	—	—	—	—	—	—
Worker	< 0.005	< 0.005	< 0.005	0.06	0.00	0.00	0.01	0.01	0.00	< 0.005	< 0.005	—	11.8	11.8	< 0.005	< 0.005	0.02	12.0
Vendor	0.00	0.00	0.00	0.00	0.00	0.00	0.00	0.00	0.00	0.00	0.00	—	0.00	0.00	0.00	0.00	0.00	0.00
Hauling	< 0.005	< 0.005	0.03	0.01	< 0.005	< 0.005	0.01	0.01	< 0.005	< 0.005	< 0.005	—	24.7	24.7	< 0.005	< 0.005	0.02	25.9
Annual	—	—	—	—	—	—	—	—	—	—	—	—	—	—	—	—	—	—
Worker	< 0.005	< 0.005	< 0.005	0.01	0.00	0.00	< 0.005	< 0.005	0.00	< 0.005	< 0.005	—	1.96	1.96	< 0.005	< 0.005	< 0.005	1.99
Vendor	0.00	0.00	0.00	0.00	0.00	0.00	0.00	0.00	0.00	0.00	0.00	—	0.00	0.00	0.00	0.00	0.00	0.00
Hauling	< 0.005	< 0.005	0.01	< 0.005	< 0.005	< 0.005	< 0.005	< 0.005	< 0.005	< 0.005	< 0.005	—	4.09	4.09	< 0.005	< 0.005	< 0.005	4.29

3.2. Demolition (2025) - Mitigated

Criteria Pollutants (lb/day for daily, ton/yr for annual) and GHGs (lb/day for daily, MT/yr for annual)

Location	TOG	ROG	NOx	CO	SO2	PM10E	PM10D	PM10T	PM2.5E	PM2.5D	PM2.5T	BCO2	NBCO2	CO2T	CH4	N2O	R	CO2e
Onsite	—	—	—	—	—	—	—	—	—	—	—	—	—	—	—	—	—	—
Daily, Summer (Max)	—	—	—	—	—	—	—	—	—	—	—	—	—	—	—	—	—	—

Off-Road Equipment	0.07	0.07	0.91	4.51	0.01	0.01	—	0.01	0.01	—	0.01	—	643	643	0.03	0.01	—	645
Demolition	—	—	—	—	—	—	0.00	0.00	—	0.00	0.00	—	—	—	—	—	—	—
Onsite truck	0.00	0.00	0.00	0.00	0.00	0.00	0.00	0.00	0.00	0.00	0.00	—	0.00	0.00	0.00	0.00	0.00	0.00
Daily, Winter (Max)	—	—	—	—	—	—	—	—	—	—	—	—	—	—	—	—	—	—
Off-Road Equipment	0.07	0.07	0.91	4.51	0.01	0.01	—	0.01	0.01	—	0.01	—	643	643	0.03	0.01	—	645
Demolition	—	—	—	—	—	—	0.00	0.00	—	0.00	0.00	—	—	—	—	—	—	—
Onsite truck	0.00	0.00	0.00	0.00	0.00	0.00	0.00	0.00	0.00	0.00	0.00	—	0.00	0.00	0.00	0.00	0.00	0.00
Average Daily	—	—	—	—	—	—	—	—	—	—	—	—	—	—	—	—	—	—
Off-Road Equipment	0.01	0.01	0.16	0.80	< 0.005	< 0.005	—	< 0.005	< 0.005	—	< 0.005	—	114	114	< 0.005	< 0.005	—	115
Demolition	—	—	—	—	—	—	0.00	0.00	—	0.00	0.00	—	—	—	—	—	—	—
Onsite truck	0.00	0.00	0.00	0.00	0.00	0.00	0.00	0.00	0.00	0.00	0.00	—	0.00	0.00	0.00	0.00	0.00	0.00
Annual	—	—	—	—	—	—	—	—	—	—	—	—	—	—	—	—	—	—
Off-Road Equipment	< 0.005	< 0.005	0.03	0.15	< 0.005	< 0.005	—	< 0.005	< 0.005	—	< 0.005	—	19.0	19.0	< 0.005	< 0.005	—	19.0
Demolition	—	—	—	—	—	—	0.00	0.00	—	0.00	0.00	—	—	—	—	—	—	—
Onsite truck	0.00	0.00	0.00	0.00	0.00	0.00	0.00	0.00	0.00	0.00	0.00	—	0.00	0.00	0.00	0.00	0.00	0.00
Offsite	—	—	—	—	—	—	—	—	—	—	—	—	—	—	—	—	—	—
Daily, Summer (Max)	—	—	—	—	—	—	—	—	—	—	—	—	—	—	—	—	—	—

Worker	0.02	0.02	0.02	0.35	0.00	0.00	0.07	0.07	0.00	0.02	0.02	—	69.1	69.1	< 0.005	< 0.005	0.25	70.2
Vendor	0.00	0.00	0.00	0.00	0.00	0.00	0.00	0.00	0.00	0.00	0.00	—	0.00	0.00	0.00	0.00	0.00	0.00
Hauling	0.01	< 0.005	0.17	0.07	< 0.005	< 0.005	0.04	0.04	< 0.005	0.01	0.01	—	139	139	0.01	0.02	0.32	146
Daily, Winter (Max)	—	—	—	—	—	—	—	—	—	—	—	—	—	—	—	—	—	—
Worker	0.02	0.02	0.02	0.29	0.00	0.00	0.07	0.07	0.00	0.02	0.02	—	65.5	65.5	< 0.005	< 0.005	0.01	66.4
Vendor	0.00	0.00	0.00	0.00	0.00	0.00	0.00	0.00	0.00	0.00	0.00	—	0.00	0.00	0.00	0.00	0.00	0.00
Hauling	0.01	< 0.005	0.18	0.07	< 0.005	< 0.005	0.04	0.04	< 0.005	0.01	0.01	—	139	139	0.01	0.02	0.01	145
Average Daily	—	—	—	—	—	—	—	—	—	—	—	—	—	—	—	—	—	—
Worker	< 0.005	< 0.005	< 0.005	0.06	0.00	0.00	0.01	0.01	0.00	< 0.005	< 0.005	—	11.8	11.8	< 0.005	< 0.005	0.02	12.0
Vendor	0.00	0.00	0.00	0.00	0.00	0.00	0.00	0.00	0.00	0.00	0.00	—	0.00	0.00	0.00	0.00	0.00	0.00
Hauling	< 0.005	< 0.005	0.03	0.01	< 0.005	< 0.005	0.01	0.01	< 0.005	< 0.005	< 0.005	—	24.7	24.7	< 0.005	< 0.005	0.02	25.9
Annual	—	—	—	—	—	—	—	—	—	—	—	—	—	—	—	—	—	—
Worker	< 0.005	< 0.005	< 0.005	0.01	0.00	0.00	< 0.005	< 0.005	0.00	< 0.005	< 0.005	—	1.96	1.96	< 0.005	< 0.005	< 0.005	1.99
Vendor	0.00	0.00	0.00	0.00	0.00	0.00	0.00	0.00	0.00	0.00	0.00	—	0.00	0.00	0.00	0.00	0.00	0.00
Hauling	< 0.005	< 0.005	0.01	< 0.005	< 0.005	< 0.005	< 0.005	< 0.005	< 0.005	< 0.005	< 0.005	—	4.09	4.09	< 0.005	< 0.005	< 0.005	4.29

3.3. Site Prep (2025) - Unmitigated

Criteria Pollutants (lb/day for daily, ton/yr for annual) and GHGs (lb/day for daily, MT/yr for annual)

Location	TOG	ROG	NOx	CO	SO2	PM10E	PM10D	PM10T	PM2.5E	PM2.5D	PM2.5T	BCO2	NBCO2	CO2T	CH4	N2O	R	CO2e
Onsite	—	—	—	—	—	—	—	—	—	—	—	—	—	—	—	—	—	—
Daily, Summer (Max)	—	—	—	—	—	—	—	—	—	—	—	—	—	—	—	—	—	—
Daily, Winter (Max)	—	—	—	—	—	—	—	—	—	—	—	—	—	—	—	—	—	—

Off-Road Equipment	0.38	0.32	2.63	5.04	0.01	0.12	—	0.12	0.11	—	0.11	—	792	792	0.03	0.01	—	794
Dust From Material Movement	—	—	—	—	—	—	0.00	0.00	—	0.00	0.00	—	—	—	—	—	—	—
Onsite truck	0.00	0.00	0.00	0.00	0.00	0.00	0.00	0.00	0.00	0.00	0.00	—	0.00	0.00	0.00	0.00	0.00	0.00
Average Daily	—	—	—	—	—	—	—	—	—	—	—	—	—	—	—	—	—	—
Off-Road Equipment	0.02	0.02	0.16	0.31	< 0.005	0.01	—	0.01	0.01	—	0.01	—	48.0	48.0	< 0.005	< 0.005	—	48.2
Dust From Material Movement	—	—	—	—	—	—	0.00	0.00	—	0.00	0.00	—	—	—	—	—	—	—
Onsite truck	0.00	0.00	0.00	0.00	0.00	0.00	0.00	0.00	0.00	0.00	0.00	—	0.00	0.00	0.00	0.00	0.00	0.00
Annual	—	—	—	—	—	—	—	—	—	—	—	—	—	—	—	—	—	—
Off-Road Equipment	< 0.005	< 0.005	0.03	0.06	< 0.005	< 0.005	—	< 0.005	< 0.005	—	< 0.005	—	7.95	7.95	< 0.005	< 0.005	—	7.98
Dust From Material Movement	—	—	—	—	—	—	0.00	0.00	—	0.00	0.00	—	—	—	—	—	—	—
Onsite truck	0.00	0.00	0.00	0.00	0.00	0.00	0.00	0.00	0.00	0.00	0.00	—	0.00	0.00	0.00	0.00	0.00	0.00
Offsite	—	—	—	—	—	—	—	—	—	—	—	—	—	—	—	—	—	—
Daily, Summer (Max)	—	—	—	—	—	—	—	—	—	—	—	—	—	—	—	—	—	—
Daily, Winter (Max)	—	—	—	—	—	—	—	—	—	—	—	—	—	—	—	—	—	—
Worker	0.02	0.02	0.02	0.29	0.00	0.00	0.07	0.07	0.00	0.02	0.02	—	65.5	65.5	< 0.005	< 0.005	0.01	66.4

Vendor	0.00	0.00	0.00	0.00	0.00	0.00	0.00	0.00	0.00	0.00	0.00	—	0.00	0.00	0.00	0.00	0.00	0.00
Hauling	0.00	0.00	0.00	0.00	0.00	0.00	0.00	0.00	0.00	0.00	0.00	—	0.00	0.00	0.00	0.00	0.00	0.00
Average Daily	—	—	—	—	—	—	—	—	—	—	—	—	—	—	—	—	—	—
Worker	< 0.005	< 0.005	< 0.005	0.02	0.00	0.00	< 0.005	< 0.005	0.00	< 0.005	< 0.005	—	4.03	4.03	< 0.005	< 0.005	0.01	4.09
Vendor	0.00	0.00	0.00	0.00	0.00	0.00	0.00	0.00	0.00	0.00	0.00	—	0.00	0.00	0.00	0.00	0.00	0.00
Hauling	0.00	0.00	0.00	0.00	0.00	0.00	0.00	0.00	0.00	0.00	0.00	—	0.00	0.00	0.00	0.00	0.00	0.00
Annual	—	—	—	—	—	—	—	—	—	—	—	—	—	—	—	—	—	—
Worker	< 0.005	< 0.005	< 0.005	< 0.005	0.00	0.00	< 0.005	< 0.005	0.00	< 0.005	< 0.005	—	0.67	0.67	< 0.005	< 0.005	< 0.005	0.68
Vendor	0.00	0.00	0.00	0.00	0.00	0.00	0.00	0.00	0.00	0.00	0.00	—	0.00	0.00	0.00	0.00	0.00	0.00
Hauling	0.00	0.00	0.00	0.00	0.00	0.00	0.00	0.00	0.00	0.00	0.00	—	0.00	0.00	0.00	0.00	0.00	0.00

3.4. Site Prep (2025) - Mitigated

Criteria Pollutants (lb/day for daily, ton/yr for annual) and GHGs (lb/day for daily, MT/yr for annual)

Location	TOG	ROG	NOx	CO	SO2	PM10E	PM10D	PM10T	PM2.5E	PM2.5D	PM2.5T	BCO2	NBCO2	CO2T	CH4	N2O	R	CO2e
Onsite	—	—	—	—	—	—	—	—	—	—	—	—	—	—	—	—	—	—
Daily, Summer (Max)	—	—	—	—	—	—	—	—	—	—	—	—	—	—	—	—	—	—
Daily, Winter (Max)	—	—	—	—	—	—	—	—	—	—	—	—	—	—	—	—	—	—
Off-Road Equipment	0.08	0.08	0.39	5.55	0.01	0.02	—	0.02	0.02	—	0.02	—	792	792	0.03	0.01	—	794
Dust From Material Movement	—	—	—	—	—	—	0.00	0.00	—	0.00	0.00	—	—	—	—	—	—	—
Onsite truck	0.00	0.00	0.00	0.00	0.00	0.00	0.00	0.00	0.00	0.00	0.00	—	0.00	0.00	0.00	0.00	0.00	0.00

Average Daily	—	—	—	—	—	—	—	—	—	—	—	—	—	—	—	—	—	—
Off-Road Equipment	< 0.005	< 0.005	0.02	0.34	< 0.005	< 0.005	—	< 0.005	< 0.005	—	< 0.005	—	48.0	48.0	< 0.005	< 0.005	—	48.2
Dust From Material Movement	—	—	—	—	—	—	0.00	0.00	—	0.00	0.00	—	—	—	—	—	—	—
Onsite truck	0.00	0.00	0.00	0.00	0.00	0.00	0.00	0.00	0.00	0.00	0.00	—	0.00	0.00	0.00	0.00	0.00	0.00
Annual	—	—	—	—	—	—	—	—	—	—	—	—	—	—	—	—	—	—
Off-Road Equipment	< 0.005	< 0.005	< 0.005	0.06	< 0.005	< 0.005	—	< 0.005	< 0.005	—	< 0.005	—	7.95	7.95	< 0.005	< 0.005	—	7.98
Dust From Material Movement	—	—	—	—	—	—	0.00	0.00	—	0.00	0.00	—	—	—	—	—	—	—
Onsite truck	0.00	0.00	0.00	0.00	0.00	0.00	0.00	0.00	0.00	0.00	0.00	—	0.00	0.00	0.00	0.00	0.00	0.00
Offsite	—	—	—	—	—	—	—	—	—	—	—	—	—	—	—	—	—	—
Daily, Summer (Max)	—	—	—	—	—	—	—	—	—	—	—	—	—	—	—	—	—	—
Daily, Winter (Max)	—	—	—	—	—	—	—	—	—	—	—	—	—	—	—	—	—	—
Worker	0.02	0.02	0.02	0.29	0.00	0.00	0.07	0.07	0.00	0.02	0.02	—	65.5	65.5	< 0.005	< 0.005	0.01	66.4
Vendor	0.00	0.00	0.00	0.00	0.00	0.00	0.00	0.00	0.00	0.00	0.00	—	0.00	0.00	0.00	0.00	0.00	0.00
Hauling	0.00	0.00	0.00	0.00	0.00	0.00	0.00	0.00	0.00	0.00	0.00	—	0.00	0.00	0.00	0.00	0.00	0.00
Average Daily	—	—	—	—	—	—	—	—	—	—	—	—	—	—	—	—	—	—
Worker	< 0.005	< 0.005	< 0.005	0.02	0.00	0.00	< 0.005	< 0.005	0.00	< 0.005	< 0.005	—	4.03	4.03	< 0.005	< 0.005	0.01	4.09
Vendor	0.00	0.00	0.00	0.00	0.00	0.00	0.00	0.00	0.00	0.00	0.00	—	0.00	0.00	0.00	0.00	0.00	0.00

Hauling	0.00	0.00	0.00	0.00	0.00	0.00	0.00	0.00	0.00	0.00	0.00	—	0.00	0.00	0.00	0.00	0.00	0.00
Annual	—	—	—	—	—	—	—	—	—	—	—	—	—	—	—	—	—	—
Worker	< 0.005	< 0.005	< 0.005	< 0.005	0.00	0.00	< 0.005	< 0.005	0.00	< 0.005	< 0.005	—	0.67	0.67	< 0.005	< 0.005	< 0.005	0.68
Vendor	0.00	0.00	0.00	0.00	0.00	0.00	0.00	0.00	0.00	0.00	0.00	—	0.00	0.00	0.00	0.00	0.00	0.00
Hauling	0.00	0.00	0.00	0.00	0.00	0.00	0.00	0.00	0.00	0.00	0.00	—	0.00	0.00	0.00	0.00	0.00	0.00

3.5. Site Prep (2026) - Unmitigated

Criteria Pollutants (lb/day for daily, ton/yr for annual) and GHGs (lb/day for daily, MT/yr for annual)

Location	TOG	ROG	NOx	CO	SO2	PM10E	PM10D	PM10T	PM2.5E	PM2.5D	PM2.5T	BCO2	NBCO2	CO2T	CH4	N2O	R	CO2e
Onsite	—	—	—	—	—	—	—	—	—	—	—	—	—	—	—	—	—	—
Daily, Summer (Max)	—	—	—	—	—	—	—	—	—	—	—	—	—	—	—	—	—	—
Daily, Winter (Max)	—	—	—	—	—	—	—	—	—	—	—	—	—	—	—	—	—	—
Off-Road Equipment	0.36	0.30	2.36	5.04	0.01	0.10	—	0.10	0.10	—	0.10	—	792	792	0.03	0.01	—	794
Dust From Material Movement	—	—	—	—	—	—	0.00	0.00	—	0.00	0.00	—	—	—	—	—	—	—
Onsite truck	0.00	0.00	0.00	0.00	0.00	0.00	0.00	0.00	0.00	0.00	0.00	—	0.00	0.00	0.00	0.00	0.00	0.00
Average Daily	—	—	—	—	—	—	—	—	—	—	—	—	—	—	—	—	—	—
Off-Road Equipment	0.02	0.02	0.14	0.31	< 0.005	0.01	—	0.01	0.01	—	0.01	—	48.0	48.0	< 0.005	< 0.005	—	48.2
Dust From Material Movement	—	—	—	—	—	—	0.00	0.00	—	0.00	0.00	—	—	—	—	—	—	—

Onsite truck	0.00	0.00	0.00	0.00	0.00	0.00	0.00	0.00	0.00	0.00	0.00	—	0.00	0.00	0.00	0.00	0.00	0.00
Annual	—	—	—	—	—	—	—	—	—	—	—	—	—	—	—	—	—	—
Off-Road Equipment	< 0.005	< 0.005	0.03	0.06	< 0.005	< 0.005	—	< 0.005	< 0.005	—	< 0.005	—	7.95	7.95	< 0.005	< 0.005	—	7.98
Dust From Material Movement	—	—	—	—	—	—	0.00	0.00	—	0.00	0.00	—	—	—	—	—	—	—
Onsite truck	0.00	0.00	0.00	0.00	0.00	0.00	0.00	0.00	0.00	0.00	0.00	—	0.00	0.00	0.00	0.00	0.00	0.00
Offsite	—	—	—	—	—	—	—	—	—	—	—	—	—	—	—	—	—	—
Daily, Summer (Max)	—	—	—	—	—	—	—	—	—	—	—	—	—	—	—	—	—	—
Daily, Winter (Max)	—	—	—	—	—	—	—	—	—	—	—	—	—	—	—	—	—	—
Worker	0.02	0.02	0.02	0.28	0.00	0.00	0.07	0.07	0.00	0.02	0.02	—	64.2	64.2	< 0.005	< 0.005	0.01	65.0
Vendor	0.00	0.00	0.00	0.00	0.00	0.00	0.00	0.00	0.00	0.00	0.00	—	0.00	0.00	0.00	0.00	0.00	0.00
Hauling	0.00	0.00	0.00	0.00	0.00	0.00	0.00	0.00	0.00	0.00	0.00	—	0.00	0.00	0.00	0.00	0.00	0.00
Average Daily	—	—	—	—	—	—	—	—	—	—	—	—	—	—	—	—	—	—
Worker	< 0.005	< 0.005	< 0.005	0.02	0.00	0.00	< 0.005	< 0.005	0.00	< 0.005	< 0.005	—	3.95	3.95	< 0.005	< 0.005	0.01	4.01
Vendor	0.00	0.00	0.00	0.00	0.00	0.00	0.00	0.00	0.00	0.00	0.00	—	0.00	0.00	0.00	0.00	0.00	0.00
Hauling	0.00	0.00	0.00	0.00	0.00	0.00	0.00	0.00	0.00	0.00	0.00	—	0.00	0.00	0.00	0.00	0.00	0.00
Annual	—	—	—	—	—	—	—	—	—	—	—	—	—	—	—	—	—	—
Worker	< 0.005	< 0.005	< 0.005	< 0.005	0.00	0.00	< 0.005	< 0.005	0.00	< 0.005	< 0.005	—	0.65	0.65	< 0.005	< 0.005	< 0.005	0.66
Vendor	0.00	0.00	0.00	0.00	0.00	0.00	0.00	0.00	0.00	0.00	0.00	—	0.00	0.00	0.00	0.00	0.00	0.00
Hauling	0.00	0.00	0.00	0.00	0.00	0.00	0.00	0.00	0.00	0.00	0.00	—	0.00	0.00	0.00	0.00	0.00	0.00

3.6. Site Prep (2026) - Mitigated

Criteria Pollutants (lb/day for daily, ton/yr for annual) and GHGs (lb/day for daily, MT/yr for annual)

Location	TOG	ROG	NOx	CO	SO2	PM10E	PM10D	PM10T	PM2.5E	PM2.5D	PM2.5T	BCO2	NBCO2	CO2T	CH4	N2O	R	CO2e
Onsite	—	—	—	—	—	—	—	—	—	—	—	—	—	—	—	—	—	—
Daily, Summer (Max)	—	—	—	—	—	—	—	—	—	—	—	—	—	—	—	—	—	—
Daily, Winter (Max)	—	—	—	—	—	—	—	—	—	—	—	—	—	—	—	—	—	—
Off-Road Equipment	0.08	0.08	0.39	5.55	0.01	0.02	—	0.02	0.02	—	0.02	—	792	792	0.03	0.01	—	794
Dust From Material Movement	—	—	—	—	—	—	0.00	0.00	—	0.00	0.00	—	—	—	—	—	—	—
Onsite truck	0.00	0.00	0.00	0.00	0.00	0.00	0.00	0.00	0.00	0.00	0.00	—	0.00	0.00	0.00	0.00	0.00	0.00
Average Daily	—	—	—	—	—	—	—	—	—	—	—	—	—	—	—	—	—	—
Off-Road Equipment	< 0.005	< 0.005	0.02	0.34	< 0.005	< 0.005	—	< 0.005	< 0.005	—	< 0.005	—	48.0	48.0	< 0.005	< 0.005	—	48.2
Dust From Material Movement	—	—	—	—	—	—	0.00	0.00	—	0.00	0.00	—	—	—	—	—	—	—
Onsite truck	0.00	0.00	0.00	0.00	0.00	0.00	0.00	0.00	0.00	0.00	0.00	—	0.00	0.00	0.00	0.00	0.00	0.00
Annual	—	—	—	—	—	—	—	—	—	—	—	—	—	—	—	—	—	—
Off-Road Equipment	< 0.005	< 0.005	< 0.005	0.06	< 0.005	< 0.005	—	< 0.005	< 0.005	—	< 0.005	—	7.95	7.95	< 0.005	< 0.005	—	7.98

Dust From Material Movement	—	—	—	—	—	—	0.00	0.00	—	0.00	0.00	—	—	—	—	—	—	—
Onsite truck	0.00	0.00	0.00	0.00	0.00	0.00	0.00	0.00	0.00	0.00	0.00	—	0.00	0.00	0.00	0.00	0.00	0.00
Offsite	—	—	—	—	—	—	—	—	—	—	—	—	—	—	—	—	—	—
Daily, Summer (Max)	—	—	—	—	—	—	—	—	—	—	—	—	—	—	—	—	—	—
Daily, Winter (Max)	—	—	—	—	—	—	—	—	—	—	—	—	—	—	—	—	—	—
Worker	0.02	0.02	0.02	0.28	0.00	0.00	0.07	0.07	0.00	0.02	0.02	—	64.2	64.2	< 0.005	< 0.005	0.01	65.0
Vendor	0.00	0.00	0.00	0.00	0.00	0.00	0.00	0.00	0.00	0.00	0.00	—	0.00	0.00	0.00	0.00	0.00	0.00
Hauling	0.00	0.00	0.00	0.00	0.00	0.00	0.00	0.00	0.00	0.00	0.00	—	0.00	0.00	0.00	0.00	0.00	0.00
Average Daily	—	—	—	—	—	—	—	—	—	—	—	—	—	—	—	—	—	—
Worker	< 0.005	< 0.005	< 0.005	0.02	0.00	0.00	< 0.005	< 0.005	0.00	< 0.005	< 0.005	—	3.95	3.95	< 0.005	< 0.005	0.01	4.01
Vendor	0.00	0.00	0.00	0.00	0.00	0.00	0.00	0.00	0.00	0.00	0.00	—	0.00	0.00	0.00	0.00	0.00	0.00
Hauling	0.00	0.00	0.00	0.00	0.00	0.00	0.00	0.00	0.00	0.00	0.00	—	0.00	0.00	0.00	0.00	0.00	0.00
Annual	—	—	—	—	—	—	—	—	—	—	—	—	—	—	—	—	—	—
Worker	< 0.005	< 0.005	< 0.005	< 0.005	0.00	0.00	< 0.005	< 0.005	0.00	< 0.005	< 0.005	—	0.65	0.65	< 0.005	< 0.005	< 0.005	0.66
Vendor	0.00	0.00	0.00	0.00	0.00	0.00	0.00	0.00	0.00	0.00	0.00	—	0.00	0.00	0.00	0.00	0.00	0.00
Hauling	0.00	0.00	0.00	0.00	0.00	0.00	0.00	0.00	0.00	0.00	0.00	—	0.00	0.00	0.00	0.00	0.00	0.00

3.7. Grading (2026) - Unmitigated

Criteria Pollutants (lb/day for daily, ton/yr for annual) and GHGs (lb/day for daily, MT/yr for annual)

Location	TOG	ROG	NOx	CO	SO2	PM10E	PM10D	PM10T	PM2.5E	PM2.5D	PM2.5T	BCO2	NBCO2	CO2T	CH4	N2O	R	CO2e
Onsite	—	—	—	—	—	—	—	—	—	—	—	—	—	—	—	—	—	—

Daily, Summer (Max)	—	—	—	—	—	—	—	—	—	—	—	—	—	—	—	—	—	—
Daily, Winter (Max)	—	—	—	—	—	—	—	—	—	—	—	—	—	—	—	—	—	—
Off-Road Equipment	1.87	1.57	14.1	16.8	0.03	0.64	—	0.64	0.58	—	0.58	—	2,938	2,938	0.12	0.02	—	2,948
Dust From Material Movement	—	—	—	—	—	—	1.84	1.84	—	0.89	0.89	—	—	—	—	—	—	—
Onsite truck	0.00	0.00	0.00	0.00	0.00	0.00	0.00	0.00	0.00	0.00	0.00	—	0.00	0.00	0.00	0.00	0.00	0.00
Average Daily	—	—	—	—	—	—	—	—	—	—	—	—	—	—	—	—	—	—
Off-Road Equipment	0.22	0.18	1.62	1.94	< 0.005	0.07	—	0.07	0.07	—	0.07	—	338	338	0.01	< 0.005	—	339
Dust From Material Movement	—	—	—	—	—	—	0.21	0.21	—	0.10	0.10	—	—	—	—	—	—	—
Onsite truck	0.00	0.00	0.00	0.00	0.00	0.00	0.00	0.00	0.00	0.00	0.00	—	0.00	0.00	0.00	0.00	0.00	0.00
Annual	—	—	—	—	—	—	—	—	—	—	—	—	—	—	—	—	—	—
Off-Road Equipment	0.04	0.03	0.30	0.35	< 0.005	0.01	—	0.01	0.01	—	0.01	—	56.0	56.0	< 0.005	< 0.005	—	56.2
Dust From Material Movement	—	—	—	—	—	—	0.04	0.04	—	0.02	0.02	—	—	—	—	—	—	—
Onsite truck	0.00	0.00	0.00	0.00	0.00	0.00	0.00	0.00	0.00	0.00	0.00	—	0.00	0.00	0.00	0.00	0.00	0.00
Offsite	—	—	—	—	—	—	—	—	—	—	—	—	—	—	—	—	—	—

Daily, Summer (Max)	—	—	—	—	—	—	—	—	—	—	—	—	—	—	—	—	—	—
Daily, Winter (Max)	—	—	—	—	—	—	—	—	—	—	—	—	—	—	—	—	—	—
Worker	0.05	0.05	0.05	0.69	0.00	0.00	0.16	0.16	0.00	0.04	0.04	—	161	161	0.01	0.01	0.01	163
Vendor	0.00	0.00	0.00	0.00	0.00	0.00	0.00	0.00	0.00	0.00	0.00	—	0.00	0.00	0.00	0.00	0.00	0.00
Hauling	0.00	0.00	0.00	0.00	0.00	0.00	0.00	0.00	0.00	0.00	0.00	—	0.00	0.00	0.00	0.00	0.00	0.00
Average Daily	—	—	—	—	—	—	—	—	—	—	—	—	—	—	—	—	—	—
Worker	0.01	0.01	0.01	0.08	0.00	0.00	0.02	0.02	0.00	< 0.005	< 0.005	—	18.7	18.7	< 0.005	< 0.005	0.03	19.0
Vendor	0.00	0.00	0.00	0.00	0.00	0.00	0.00	0.00	0.00	0.00	0.00	—	0.00	0.00	0.00	0.00	0.00	0.00
Hauling	0.00	0.00	0.00	0.00	0.00	0.00	0.00	0.00	0.00	0.00	0.00	—	0.00	0.00	0.00	0.00	0.00	0.00
Annual	—	—	—	—	—	—	—	—	—	—	—	—	—	—	—	—	—	—
Worker	< 0.005	< 0.005	< 0.005	0.02	0.00	0.00	< 0.005	< 0.005	0.00	< 0.005	< 0.005	—	3.10	3.10	< 0.005	< 0.005	< 0.005	3.15
Vendor	0.00	0.00	0.00	0.00	0.00	0.00	0.00	0.00	0.00	0.00	0.00	—	0.00	0.00	0.00	0.00	0.00	0.00
Hauling	0.00	0.00	0.00	0.00	0.00	0.00	0.00	0.00	0.00	0.00	0.00	—	0.00	0.00	0.00	0.00	0.00	0.00

3.8. Grading (2026) - Mitigated

Criteria Pollutants (lb/day for daily, ton/yr for annual) and GHGs (lb/day for daily, MT/yr for annual)

Location	TOG	ROG	NOx	CO	SO2	PM10E	PM10D	PM10T	PM2.5E	PM2.5D	PM2.5T	BCO2	NBCO2	CO2T	CH4	N2O	R	CO2e
Onsite	—	—	—	—	—	—	—	—	—	—	—	—	—	—	—	—	—	—
Daily, Summer (Max)	—	—	—	—	—	—	—	—	—	—	—	—	—	—	—	—	—	—
Daily, Winter (Max)	—	—	—	—	—	—	—	—	—	—	—	—	—	—	—	—	—	—
Off-Road Equipment	0.35	0.33	3.31	17.4	0.03	0.07	—	0.07	0.07	—	0.07	—	2,938	2,938	0.12	0.02	—	2,948

Dust From Material Movement	—	—	—	—	—	—	1.84	1.84	—	0.89	0.89	—	—	—	—	—	—	—
Onsite truck	0.00	0.00	0.00	0.00	0.00	0.00	0.00	0.00	0.00	0.00	0.00	—	0.00	0.00	0.00	0.00	0.00	0.00
Average Daily	—	—	—	—	—	—	—	—	—	—	—	—	—	—	—	—	—	—
Off-Road Equipment	0.04	0.04	0.38	2.01	< 0.005	0.01	—	0.01	0.01	—	0.01	—	338	338	0.01	< 0.005	—	339
Dust From Material Movement	—	—	—	—	—	—	0.21	0.21	—	0.10	0.10	—	—	—	—	—	—	—
Onsite truck	0.00	0.00	0.00	0.00	0.00	0.00	0.00	0.00	0.00	0.00	0.00	—	0.00	0.00	0.00	0.00	0.00	0.00
Annual	—	—	—	—	—	—	—	—	—	—	—	—	—	—	—	—	—	—
Off-Road Equipment	0.01	0.01	0.07	0.37	< 0.005	< 0.005	—	< 0.005	< 0.005	—	< 0.005	—	56.0	56.0	< 0.005	< 0.005	—	56.2
Dust From Material Movement	—	—	—	—	—	—	0.04	0.04	—	0.02	0.02	—	—	—	—	—	—	—
Onsite truck	0.00	0.00	0.00	0.00	0.00	0.00	0.00	0.00	0.00	0.00	0.00	—	0.00	0.00	0.00	0.00	0.00	0.00
Offsite	—	—	—	—	—	—	—	—	—	—	—	—	—	—	—	—	—	—
Daily, Summer (Max)	—	—	—	—	—	—	—	—	—	—	—	—	—	—	—	—	—	—
Daily, Winter (Max)	—	—	—	—	—	—	—	—	—	—	—	—	—	—	—	—	—	—
Worker	0.05	0.05	0.05	0.69	0.00	0.00	0.16	0.16	0.00	0.04	0.04	—	161	161	0.01	0.01	0.01	163
Vendor	0.00	0.00	0.00	0.00	0.00	0.00	0.00	0.00	0.00	0.00	0.00	—	0.00	0.00	0.00	0.00	0.00	0.00
Hauling	0.00	0.00	0.00	0.00	0.00	0.00	0.00	0.00	0.00	0.00	0.00	—	0.00	0.00	0.00	0.00	0.00	0.00

Daily, Summer (Max)	—	—	—	—	—	—	—	—	—	—	—	—	—	—	—	—	—	—
Off-Road Equipment	0.01	0.01	0.08	1.07	< 0.005	< 0.005	—	< 0.005	< 0.005	—	< 0.005	—	152	152	0.01	< 0.005	—	153
Onsite truck	0.00	0.00	0.00	0.00	0.00	0.00	0.00	0.00	0.00	0.00	0.00	—	0.00	0.00	0.00	0.00	0.00	0.00
Daily, Winter (Max)	—	—	—	—	—	—	—	—	—	—	—	—	—	—	—	—	—	—
Average Daily	—	—	—	—	—	—	—	—	—	—	—	—	—	—	—	—	—	—
Off-Road Equipment	0.01	0.01	0.03	0.38	< 0.005	< 0.005	—	< 0.005	< 0.005	—	< 0.005	—	54.7	54.7	< 0.005	< 0.005	—	54.9
Onsite truck	0.00	0.00	0.00	0.00	0.00	0.00	0.00	0.00	0.00	0.00	0.00	—	0.00	0.00	0.00	0.00	0.00	0.00
Annual	—	—	—	—	—	—	—	—	—	—	—	—	—	—	—	—	—	—
Off-Road Equipment	< 0.005	< 0.005	< 0.005	0.07	< 0.005	< 0.005	—	< 0.005	< 0.005	—	< 0.005	—	9.06	9.06	< 0.005	< 0.005	—	9.09
Onsite truck	0.00	0.00	0.00	0.00	0.00	0.00	0.00	0.00	0.00	0.00	0.00	—	0.00	0.00	0.00	0.00	0.00	0.00
Offsite	—	—	—	—	—	—	—	—	—	—	—	—	—	—	—	—	—	—
Daily, Summer (Max)	—	—	—	—	—	—	—	—	—	—	—	—	—	—	—	—	—	—
Worker	0.42	0.37	0.39	6.46	0.00	0.00	1.31	1.31	0.00	0.31	0.31	—	1,355	1,355	0.06	0.05	4.58	1,375
Vendor	0.00	0.00	0.00	0.00	0.00	0.00	0.00	0.00	0.00	0.00	0.00	—	0.00	0.00	0.00	0.00	0.00	0.00
Hauling	0.03	0.01	0.49	0.19	< 0.005	0.01	0.11	0.12	0.01	0.03	0.04	—	408	408	0.02	0.07	0.92	429
Daily, Winter (Max)	—	—	—	—	—	—	—	—	—	—	—	—	—	—	—	—	—	—
Average Daily	—	—	—	—	—	—	—	—	—	—	—	—	—	—	—	—	—	—

Worker	0.15	0.13	0.17	2.07	0.00	0.00	0.46	0.46	0.00	0.11	0.11	—	468	468	0.02	0.02	0.71	474
Vendor	0.00	0.00	0.00	0.00	0.00	0.00	0.00	0.00	0.00	0.00	0.00	—	0.00	0.00	0.00	0.00	0.00	0.00
Hauling	0.01	< 0.005	0.19	0.07	< 0.005	< 0.005	0.04	0.04	< 0.005	0.01	0.01	—	147	147	0.01	0.02	0.14	154
Annual	—	—	—	—	—	—	—	—	—	—	—	—	—	—	—	—	—	—
Worker	0.03	0.02	0.03	0.38	0.00	0.00	0.08	0.08	0.00	0.02	0.02	—	77.4	77.4	< 0.005	< 0.005	0.12	78.5
Vendor	0.00	0.00	0.00	0.00	0.00	0.00	0.00	0.00	0.00	0.00	0.00	—	0.00	0.00	0.00	0.00	0.00	0.00
Hauling	< 0.005	< 0.005	0.03	0.01	< 0.005	< 0.005	0.01	0.01	< 0.005	< 0.005	< 0.005	—	24.3	24.3	< 0.005	< 0.005	0.02	25.5

3.11. Paving/Site Restoration (2026) - Unmitigated

Criteria Pollutants (lb/day for daily, ton/yr for annual) and GHGs (lb/day for daily, MT/yr for annual)

Location	TOG	ROG	NOx	CO	SO2	PM10E	PM10D	PM10T	PM2.5E	PM2.5D	PM2.5T	BCO2	NBCO2	CO2T	CH4	N2O	R	CO2e
Onsite	—	—	—	—	—	—	—	—	—	—	—	—	—	—	—	—	—	—
Daily, Summer (Max)	—	—	—	—	—	—	—	—	—	—	—	—	—	—	—	—	—	—
Daily, Winter (Max)	—	—	—	—	—	—	—	—	—	—	—	—	—	—	—	—	—	—
Off-Road Equipment	1.79	1.50	13.0	9.08	0.01	0.82	—	0.82	0.76	—	0.76	—	1,142	1,142	0.05	0.01	—	1,146
Paving	—	0.00	—	—	—	—	—	—	—	—	—	—	—	—	—	—	—	—
Onsite truck	0.00	0.00	0.00	0.00	0.00	0.00	0.00	0.00	0.00	0.00	0.00	—	0.00	0.00	0.00	0.00	0.00	0.00
Average Daily	—	—	—	—	—	—	—	—	—	—	—	—	—	—	—	—	—	—
Off-Road Equipment	0.21	0.18	1.53	1.07	< 0.005	0.10	—	0.10	0.09	—	0.09	—	134	134	0.01	< 0.005	—	135
Paving	—	0.00	—	—	—	—	—	—	—	—	—	—	—	—	—	—	—	—
Onsite truck	0.00	0.00	0.00	0.00	0.00	0.00	0.00	0.00	0.00	0.00	0.00	—	0.00	0.00	0.00	0.00	0.00	0.00

Annual	—	—	—	—	—	—	—	—	—	—	—	—	—	—	—	—	—	—
Off-Road Equipment	0.04	0.03	0.28	0.20	< 0.005	0.02	—	0.02	0.02	—	0.02	—	22.3	22.3	< 0.005	< 0.005	—	22.3
Paving	—	0.00	—	—	—	—	—	—	—	—	—	—	—	—	—	—	—	—
Onsite truck	0.00	0.00	0.00	0.00	0.00	0.00	0.00	0.00	0.00	0.00	0.00	—	0.00	0.00	0.00	0.00	0.00	0.00
Offsite	—	—	—	—	—	—	—	—	—	—	—	—	—	—	—	—	—	—
Daily, Summer (Max)	—	—	—	—	—	—	—	—	—	—	—	—	—	—	—	—	—	—
Daily, Winter (Max)	—	—	—	—	—	—	—	—	—	—	—	—	—	—	—	—	—	—
Worker	0.05	0.05	0.05	0.69	0.00	0.00	0.16	0.16	0.00	0.04	0.04	—	161	161	0.01	0.01	0.01	163
Vendor	0.00	0.00	0.00	0.00	0.00	0.00	0.00	0.00	0.00	0.00	0.00	—	0.00	0.00	0.00	0.00	0.00	0.00
Hauling	0.00	0.00	0.00	0.00	0.00	0.00	0.00	0.00	0.00	0.00	0.00	—	0.00	0.00	0.00	0.00	0.00	0.00
Average Daily	—	—	—	—	—	—	—	—	—	—	—	—	—	—	—	—	—	—
Worker	0.01	0.01	0.01	0.08	0.00	0.00	0.02	0.02	0.00	< 0.005	< 0.005	—	19.2	19.2	< 0.005	< 0.005	0.03	19.5
Vendor	0.00	0.00	0.00	0.00	0.00	0.00	0.00	0.00	0.00	0.00	0.00	—	0.00	0.00	0.00	0.00	0.00	0.00
Hauling	0.00	0.00	0.00	0.00	0.00	0.00	0.00	0.00	0.00	0.00	0.00	—	0.00	0.00	0.00	0.00	0.00	0.00
Annual	—	—	—	—	—	—	—	—	—	—	—	—	—	—	—	—	—	—
Worker	< 0.005	< 0.005	< 0.005	0.02	0.00	0.00	< 0.005	< 0.005	0.00	< 0.005	< 0.005	—	3.18	3.18	< 0.005	< 0.005	< 0.005	3.22
Vendor	0.00	0.00	0.00	0.00	0.00	0.00	0.00	0.00	0.00	0.00	0.00	—	0.00	0.00	0.00	0.00	0.00	0.00
Hauling	0.00	0.00	0.00	0.00	0.00	0.00	0.00	0.00	0.00	0.00	0.00	—	0.00	0.00	0.00	0.00	0.00	0.00

3.12. Paving/Site Restoration (2026) - Mitigated

Criteria Pollutants (lb/day for daily, ton/yr for annual) and GHGs (lb/day for daily, MT/yr for annual)

Location	TOG	ROG	NOx	CO	SO2	PM10E	PM10D	PM10T	PM2.5E	PM2.5D	PM2.5T	BCO2	NBCO2	CO2T	CH4	N2O	R	CO2e
Onsite	—	—	—	—	—	—	—	—	—	—	—	—	—	—	—	—	—	—

Daily, Summer (Max)	—	—	—	—	—	—	—	—	—	—	—	—	—	—	—	—	—	—
Daily, Winter (Max)	—	—	—	—	—	—	—	—	—	—	—	—	—	—	—	—	—	—
Off-Road Equipment	0.20	0.19	4.09	7.79	0.01	0.04	—	0.04	0.04	—	0.04	—	1,142	1,142	0.05	0.01	—	1,146
Paving	—	0.00	—	—	—	—	—	—	—	—	—	—	—	—	—	—	—	—
Onsite truck	0.00	0.00	0.00	0.00	0.00	0.00	0.00	0.00	0.00	0.00	0.00	—	0.00	0.00	0.00	0.00	0.00	0.00
Average Daily	—	—	—	—	—	—	—	—	—	—	—	—	—	—	—	—	—	—
Off-Road Equipment	0.02	0.02	0.48	0.92	< 0.005	< 0.005	—	< 0.005	< 0.005	—	< 0.005	—	134	134	0.01	< 0.005	—	135
Paving	—	0.00	—	—	—	—	—	—	—	—	—	—	—	—	—	—	—	—
Onsite truck	0.00	0.00	0.00	0.00	0.00	0.00	0.00	0.00	0.00	0.00	0.00	—	0.00	0.00	0.00	0.00	0.00	0.00
Annual	—	—	—	—	—	—	—	—	—	—	—	—	—	—	—	—	—	—
Off-Road Equipment	< 0.005	< 0.005	0.09	0.17	< 0.005	< 0.005	—	< 0.005	< 0.005	—	< 0.005	—	22.3	22.3	< 0.005	< 0.005	—	22.3
Paving	—	0.00	—	—	—	—	—	—	—	—	—	—	—	—	—	—	—	—
Onsite truck	0.00	0.00	0.00	0.00	0.00	0.00	0.00	0.00	0.00	0.00	0.00	—	0.00	0.00	0.00	0.00	0.00	0.00
Offsite	—	—	—	—	—	—	—	—	—	—	—	—	—	—	—	—	—	—
Daily, Summer (Max)	—	—	—	—	—	—	—	—	—	—	—	—	—	—	—	—	—	—
Daily, Winter (Max)	—	—	—	—	—	—	—	—	—	—	—	—	—	—	—	—	—	—
Worker	0.05	0.05	0.05	0.69	0.00	0.00	0.16	0.16	0.00	0.04	0.04	—	161	161	0.01	0.01	0.01	163
Vendor	0.00	0.00	0.00	0.00	0.00	0.00	0.00	0.00	0.00	0.00	0.00	—	0.00	0.00	0.00	0.00	0.00	0.00

Hauling	0.00	0.00	0.00	0.00	0.00	0.00	0.00	0.00	0.00	0.00	0.00	—	0.00	0.00	0.00	0.00	0.00	0.00
Average Daily	—	—	—	—	—	—	—	—	—	—	—	—	—	—	—	—	—	—
Worker	0.01	0.01	0.01	0.08	0.00	0.00	0.02	0.02	0.00	< 0.005	< 0.005	—	19.2	19.2	< 0.005	< 0.005	0.03	19.5
Vendor	0.00	0.00	0.00	0.00	0.00	0.00	0.00	0.00	0.00	0.00	0.00	—	0.00	0.00	0.00	0.00	0.00	0.00
Hauling	0.00	0.00	0.00	0.00	0.00	0.00	0.00	0.00	0.00	0.00	0.00	—	0.00	0.00	0.00	0.00	0.00	0.00
Annual	—	—	—	—	—	—	—	—	—	—	—	—	—	—	—	—	—	—
Worker	< 0.005	< 0.005	< 0.005	0.02	0.00	0.00	< 0.005	< 0.005	0.00	< 0.005	< 0.005	—	3.18	3.18	< 0.005	< 0.005	< 0.005	3.22
Vendor	0.00	0.00	0.00	0.00	0.00	0.00	0.00	0.00	0.00	0.00	0.00	—	0.00	0.00	0.00	0.00	0.00	0.00
Hauling	0.00	0.00	0.00	0.00	0.00	0.00	0.00	0.00	0.00	0.00	0.00	—	0.00	0.00	0.00	0.00	0.00	0.00

5. Activity Data

5.1. Construction Schedule

Phase Name	Phase Type	Start Date	End Date	Days Per Week	Work Days per Phase	Phase Description
Demolition	Demolition	9/1/2025	11/30/2025	5.00	65.0	—
Site Prep	Site Preparation	12/1/2025	1/31/2026	5.00	45.0	—
Grading	Grading	2/1/2026	3/31/2026	5.00	42.0	—
Infrastructure Installation	Building Construction	4/1/2026	9/30/2026	5.00	131	—
Paving/Site Restoration	Paving	10/1/2026	11/30/2026	5.00	43.0	—

5.2. Off-Road Equipment

5.2.1. Unmitigated

Phase Name	Equipment Type	Fuel Type	Engine Tier	Number per Day	Hours Per Day	Horsepower	Load Factor
Demolition	Excavators	Diesel	Average	1.00	8.00	36.0	0.38
Demolition	Rubber Tired Loaders	Diesel	Average	1.00	8.00	150	0.36
Site Prep	Tractors/Loaders/Backhoes	Diesel	Average	1.00	8.00	84.0	0.37
Site Prep	Rubber Tired Loaders	Diesel	Average	1.00	8.00	150	0.36
Grading	Skid Steer Loaders	Diesel	Average	2.00	8.00	71.0	0.37
Grading	Rubber Tired Dozers	Diesel	Average	1.00	8.00	367	0.40
Grading	Graders	Diesel	Average	1.00	8.00	148	0.41
Grading	Rubber Tired Loaders	Diesel	Average	1.00	8.00	150	0.36
Infrastructure Installation	Forklifts	Diesel	Average	1.00	8.00	82.0	0.20
Infrastructure Installation	Generator Sets	Diesel	Average	3.00	8.00	14.0	0.74
Paving/Site Restoration	Rollers	Diesel	Average	2.00	8.00	50.0	0.38
Paving/Site Restoration	Paving Equipment	Diesel	Average	1.00	8.00	89.0	0.36

Paving/Site Restoration	Skid Steer Loaders	Diesel	Average	2.00	8.00	71.0	0.37

5.2.2. Mitigated

Phase Name	Equipment Type	Fuel Type	Engine Tier	Number per Day	Hours Per Day	Horsepower	Load Factor
Demolition	Excavators	Diesel	Tier 4 Final	1.00	8.00	36.0	0.38
Demolition	Rubber Tired Loaders	Diesel	Tier 4 Final	1.00	8.00	150	0.36
Site Prep	Tractors/Loaders/Backhoes	Diesel	Tier 4 Final	1.00	8.00	84.0	0.37
Site Prep	Rubber Tired Loaders	Diesel	Tier 4 Final	1.00	8.00	150	0.36
Grading	Skid Steer Loaders	Diesel	Average	1.00	8.00	71.0	0.37
Grading	Skid Steer Loaders	Diesel	Tier 4 Final	1.00	8.00	71.0	0.37
Grading	Rubber Tired Dozers	Diesel	Tier 4 Final	1.00	8.00	367	0.40
Grading	Graders	Diesel	Tier 4 Final	1.00	8.00	148	0.41
Grading	Rubber Tired Loaders	Diesel	Tier 4 Final	1.00	8.00	150	0.36
Infrastructure Installation	Forklifts	Diesel	Tier 4 Final	1.00	8.00	82.0	0.20
Infrastructure Installation	Generator Sets	Electric	Average	3.00	8.00	14.0	0.74
Paving/Site Restoration	Rollers	Diesel	Tier 4 Final	2.00	8.00	50.0	0.38
Paving/Site Restoration	Paving Equipment	Diesel	Tier 4 Final	1.00	8.00	89.0	0.36
Paving/Site Restoration	Skid Steer Loaders	Diesel	Average	1.00	8.00	71.0	0.37
Paving/Site Restoration	Skid Steer Loaders	Diesel	Tier 4 Final	1.00	8.00	71.0	0.37

5.3. Construction Vehicles

5.3.1. Unmitigated

Phase Name	Trip Type	One-Way Trips per Day	Miles per Trip	Vehicle Mix
Infrastructure Installation	—	—	—	—
Infrastructure Installation	Worker	100	18.5	LDA,LDT1,LDT2

5.4.1. Construction Vehicle Control Strategies

Non-applicable. No control strategies activated by user.

5.5. Architectural Coatings

Phase Name	Residential Interior Area Coated (sq ft)	Residential Exterior Area Coated (sq ft)	Non-Residential Interior Area Coated (sq ft)	Non-Residential Exterior Area Coated (sq ft)	Parking Area Coated (sq ft)

5.6. Dust Mitigation

5.6.1. Construction Earthmoving Activities

Phase Name	Material Imported (Cubic Yards)	Material Exported (Cubic Yards)	Acres Graded (acres)	Material Demolished (Ton of Debris)	Acres Paved (acres)
Demolition	0.00	0.00	0.00	0.00	—
Site Prep	0.00	0.00	0.00	0.00	—
Grading	0.00	0.00	0.00	0.00	—
Paving/Site Restoration	0.00	0.00	0.00	0.00	5.00

5.6.2. Construction Earthmoving Control Strategies

Control Strategies Applied	Frequency (per day)	PM10 Reduction	PM2.5 Reduction
Water Exposed Area	3	74%	74%
Water Demolished Area	2	36%	36%

5.7. Construction Paving

Land Use	Area Paved (acres)	% Asphalt
Other Asphalt Surfaces	5.00	0%

5.8. Construction Electricity Consumption and Emissions Factors

kWh per Year and Emission Factor (lb/MWh)

Year	kWh per Year	CO2	CH4	N2O
2025	0.00	532	0.03	< 0.005
2026	0.00	532	0.03	< 0.005

8. User Changes to Default Data

Screen	Justification
Construction: Construction Phases	Project Descriptions
Construction: Off-Road Equipment	Based on project information
Construction: Dust From Material Movement	based on project information
Construction: Paving	No paving phase
Construction: Trips and VMT	based on project information

Appendix B

Health Risk Assessment Results

Reservoir Cover and Liner

Garvey Reservoir Rehab - Unmitigated Reservoir Cover and Liner Work

Cancer Risk Summary & Maximum Annual GLC for Chronic Calculations

Cancer Risk Summary

Max Risk: 2.359732

XY	X	Y	Offroad Risk	Haul Risk	Total Risk
396166.283767377.28	396166.28	3767377.3	0.054884816	0.003921235	0.058806051
396266.283767377.28	396266.28	3767377.3	0.059059747	0.004010132	0.063069879
396366.283767377.28	396366.28	3767377.3	0.065507361	0.004173228	0.069680589
396466.283767377.28	396466.28	3767377.3	0.070513273	0.004281958	0.074795231
396566.283767377.28	396566.28	3767377.3	0.076410237	0.0046942	0.081104437
396666.283767377.28	396666.28	3767377.3	0.078012129	0.004438107	0.082450235
396766.283767377.28	396766.28	3767377.3	0.077671727	0.004420701	0.082092428
396866.283767377.28	396866.28	3767377.3	0.077992105	0.004424574	0.082416679
396966.283767377.28	396966.28	3767377.3	0.080304836	0.00448312	0.084787956
397066.283767377.28	397066.28	3767377.3	0.080495061	0.004370062	0.084865123
397166.283767377.28	397166.28	3767377.3	0.076950875	0.004310284	0.08126116
397266.283767377.28	397266.28	3767377.3	0.07126416	0.004315484	0.075579644
397366.283767377.28	397366.28	3767377.3	0.067719974	0.004118765	0.071838739
397466.283767377.28	397466.28	3767377.3	0.063555056	0.003707955	0.06726301
397566.283767377.28	397566.28	3767377.3	0.057708151	0.003647262	0.061355413
397666.283767377.28	397666.28	3767377.3	0.052191636	0.003540204	0.05573184
397766.283767377.28	397766.28	3767377.3	0.045904211	0.003653618	0.049557828
397866.283767377.28	397866.28	3767377.3	0.041228689	0.003480089	0.044708778
396166.283767477.28	396166.28	3767477.3	0.062623956	0.004512453	0.067136409
396266.283767477.28	396266.28	3767477.3	0.067439643	0.004409144	0.071848787
396366.283767477.28	396366.28	3767477.3	0.077101053	0.00464516	0.081746213
396466.283767477.28	396466.28	3767477.3	0.085721233	0.005087616	0.090808849
396566.283767477.28	396566.28	3767477.3	0.092919734	0.00515675	0.098076483
396666.283767477.28	396666.28	3767477.3	0.096914451	0.005007013	0.101921465
396766.283767477.28	396766.28	3767477.3	0.099167112	0.00504618	0.104213292
396866.283767477.28	396866.28	3767477.3	0.100558755	0.005075645	0.1056344
396966.283767477.28	396966.28	3767477.3	0.103512243	0.005151203	0.108663446
397066.283767477.28	397066.28	3767477.3	0.10371248	0.005052211	0.108764691
397166.283767477.28	397166.28	3767477.3	0.098846733	0.004893089	0.103739823
397266.283767477.28	397266.28	3767477.3	0.090436802	0.004909259	0.095346061
397366.283767477.28	397366.28	3767477.3	0.082917922	0.004761576	0.087679499
397466.283767477.28	397466.28	3767477.3	0.076490332	0.004294742	0.080785074
397566.283767477.28	397566.28	3767477.3	0.068360731	0.004072951	0.072433682
397666.283767477.28	397666.28	3767477.3	0.060301213	0.003983625	0.064284838
397766.283767477.28	397766.28	3767477.3	0.053102712	0.003889013	0.056991724
397866.283767477.28	397866.28	3767477.3	0.046925417	0.003742791	0.050668208
396166.283767577.28	396166.28	3767577.3	0.069421984	0.004756704	0.074178688
396266.283767577.28	396266.28	3767577.3	0.077761833	0.004889841	0.082651674
396366.283767577.28	396366.28	3767577.3	0.089315477	0.005114124	0.094429601
396466.283767577.28	396466.28	3767577.3	0.102741333	0.005430422	0.108171755
396566.283767577.28	396566.28	3767577.3	0.116687803	0.006032272	0.122720075
396666.283767577.28	396666.28	3767577.3	0.128501755	0.006125133	0.134626887
396766.283767577.28	396766.28	3767577.3	0.129422842	0.005775832	0.135198675
396866.283767577.28	396866.28	3767577.3	0.136721462	0.005921462	0.142642923
396966.283767577.28	396966.28	3767577.3	0.139284488	0.006002444	0.145286933
397066.283767577.28	397066.28	3767577.3	0.137832774	0.00600389	0.143836664
397166.283767577.28	397166.28	3767577.3	0.131855715	0.005782364	0.137638079
397266.283767577.28	397266.28	3767577.3	0.119020558	0.005705701	0.124726259
397366.283767577.28	397366.28	3767577.3	0.105264312	0.005563501	0.110827814
397466.283767577.28	397466.28	3767577.3	0.094611732	0.004955925	0.099567657
397566.283767577.28	397566.28	3767577.3	0.081946775	0.004674637	0.086621412
397666.283767577.28	397666.28	3767577.3	0.070673462	0.004420383	0.075093845
397766.283767577.28	397766.28	3767577.3	0.060841851	0.004252345	0.065094196
397866.283767577.28	397866.28	3767577.3	0.052752298	0.004042378	0.056794676
396166.283767677.28	396166.28	3767677.3	0.078132271	0.005759321	0.083891592
396266.283767677.28	396266.28	3767677.3	0.08982608	0.005449159	0.095275239
396366.283767677.28	396366.28	3767677.3	0.106816145	0.005806579	0.112622724
396466.283767677.28	396466.28	3767677.3	0.128171364	0.006868108	0.135039473
396566.283767677.28	396566.28	3767677.3	0.148795721	0.006930403	0.155726124
396666.283767677.28	396666.28	3767677.3	0.16175102	0.006492077	0.168243097
396766.283767677.28	396766.28	3767677.3	0.181614478	0.006758445	0.188372923
396866.283767677.28	396866.28	3767677.3	0.201998551	0.007138223	0.209136774
396966.283767677.28	396966.28	3767677.3	0.212851368	0.007215931	0.220067299
397066.283767677.28	397066.28	3767677.3	0.203119875	0.007194209	0.210314084
397166.283767677.28	397166.28	3767677.3	0.187321218	0.007035072	0.19435629
397266.283767677.28	397266.28	3767677.3	0.169420077	0.006451499	0.175871577
397366.283767677.28	397366.28	3767677.3	0.140395801	0.006562533	0.146958334
397466.283767677.28	397466.28	3767677.3	0.121133052	0.005644134	0.126777187
397566.283767677.28	397566.28	3767677.3	0.099968058	0.005415174	0.105383232
397666.283767677.28	397666.28	3767677.3	0.082998017	0.005099679	0.088097696
397766.283767677.28	397766.28	3767677.3	0.069602197	0.004760481	0.074362678
397866.283767677.28	397866.28	3767677.3	0.058769404	0.00453029	0.063299694
396166.283767777.28	396166.28	3767777.3	0.086372001	0.006463757	0.092835759
396266.283767777.28	396266.28	3767777.3	0.105564667	0.007342826	0.112907493
396366.283767777.28	396366.28	3767777.3	0.127780903	0.007146408	0.134927311

Max GLC for Chronic Calcs

Max GLC: 0.014825

XY	X	Y	2025	2026	2027	2034	2035
396166.283767377.28	396166.28	3767377.3	0.000218	0.0004198	0.0002018	0	0
396266.283767377.28	396266.28	3767377.3	0.0002343	0.0004507	0.0002163	0	0
396366.283767377.28	396366.28	3767377.3	0.0002596	0.0004985	0.0002389	0	0
396466.283767377.28	396466.28	3767377.3	0.0002793	0.0005356	0.0002563	0	0
396566.283767377.28	396566.28	3767377.3	0.0003027	0.0005807	0.000278	0	0
396666.283767377.28	396666.28	3767377.3	0.0003087	0.0005911	0.0002824	0	0
396766.283767377.28	396766.28	3767377.3	0.0003073	0.0005885	0.0002812	0	0
396866.283767377.28	396866.28	3767377.3	0.0003086	0.0005909	0.0002823	0	0
396966.283767377.28	396966.28	3767377.3	0.0003177	0.0006081	0.0002904	0	0
397066.283767377.28	397066.28	3767377.3	0.0003183	0.0006089	0.0002906	0	0
397166.283767377.28	397166.28	3767377.3	0.0003044	0.0005827	0.0002783	0	0
397266.283767377.28	397266.28	3767377.3	0.0002822	0.0005412	0.000259	0	0
397366.283767377.28	397366.28	3767377.3	0.0002682	0.0005144	0.0002462	0	0
397466.283767377.28	397466.28	3767377.3	0.0002516	0.000482	0.0002304	0	0
397566.283767377.28	397566.28	3767377.3	0.0002287	0.000439	0.0002103	0	0
397666.283767377.28	397666.28	3767377.3	0.0002071	0.0003982	0.0001912	0	0
397766.283767377.28	397766.28	3767377.3	0.0001827	0.0003529	0.0001703	0	0
397866.283767377.28	397866.28	3767377.3	0.0001642	0.0003179	0.0001537	0	0
396166.283767477.28	396166.28	3767477.3	0.0002487	0.0004791	0.0002304	0	0
396266.283767477.28	396266.28	3767477.3	0.0002674	0.0005138	0.0002464	0	0
396366.283767477.28	396366.28	3767477.3	0.0003053	0.0005855	0.0002801	0	0
396466.283767477.28	396466.28	3767477.3	0.0003394	0.0006505	0.0003112	0	0
396566.283767477.28	396566.28	3767477.3	0.0003675	0.0007034	0.0003359	0	0
396666.283767477.28	396666.28	3767477.3	0.000383	0.0007319	0.0003489	0	0
396766.283767477.28	396766.28	3767477.3	0.0003918	0.0007485	0.0003567	0	0
396866.283767477.28	396866.28	3767477.3	0.0003973	0.0007588	0.0003615	0	0
396966.283767477.28	396966.28	3767477.3	0.0004089	0.0007807	0.0003719	0	0
397066.283767477.28	397066.28	3767477.3	0.0004095	0.0007817	0.0003721	0	0
397166.283767477.28	397166.28	3767477.3	0.0003904	0.0007454	0.000355	0	0
397266.283767477.28	397266.28	3767477.3	0.0003576	0.0006841	0.0003265	0	0
397366.283767477.28	397366.28	3767477.3	0.0003281	0.0006285	0.0003004	0	0
397466.283767477.28	397466.28	3767477.3	0.0003026	0.0005793	0.0002767	0	0
397566.283767477.28	397566.28	3767477.3	0.0002707	0.0005189	0.0002482	0	0
397666.283767477.28	397666.28	3767477.3	0.0002391	0.0004596	0.0002205	0	0
397766.283767477.28	397766.28	3767477.3	0.000211	0.0004066	0.0001956	0	0
397866.283767477.28	397866.28	3767477.3	0.0001867	0.0003608	0.0001741	0	0
396166.283767577.28	396166.28	3767577.3	0.0002755	0.00053	0.0002545	0	0
396266.283767577.28	396266.28	3767577.3	0.0003081	0.0005915	0.0002833	0	0
396366.283767577.28	396366.28	3767577.3	0.0003534	0.0006769	0.0003235	0	0
396466.283767577.28	396466.28	3767577.3	0.0004061	0.0007765	0.0003703	0	0
396566.283767577.28	396566.28	3767577.3	0.0004611	0.0008812	0.0004201	0	0
396666.283767577.28	396666.28	3767577.3	0.0005073	0.0009679	0.0004606	0	0
396766.283767577.28	396766.28	3767577.3	0.0005106	0.0009729	0.0004623	0	0
396866.283767577.28	396866.28	3767577.3	0.0005392	0.0010269	0.0004877	0	0
396966.283767577.28	396966.28	3767577.3	0.0005493	0.001046	0.0004967	0	0
397066.283767577.28	397066.28	3767577.3	0.0005436	0.0010354	0.0004918	0	0
397166.283767577.28	397166.28	3767577.3	0.0005201	0.0009907	0.0004706	0	0
397266.283767577.28	397266.28	3767577.3	0.0004699	0.0008966	0.0004267	0	0
397366.283767577.28	397366.28	3767577.3	0.0004161	0.0007955	0.0003794	0	0
397466.283767577.28	397466.28	3767577.3	0.0003739	0.0007148	0.0003408	0	0
397566.283767577.28	397566.28	3767577.3	0.0003243	0.000621	0.0002967	0	0
397666.283767577.28	397666.28	3767577.3	0.00028	0.0005374	0.0002574	0	0
397766.283767577.28	397766.28	3767577.3	0.0002415	0.0004649	0.0002233	0	0
397866.283767577.28	397866.28	3767577.3	0.0002098	0.0004048	0.000195	0	0
396166.283767677.28	396166.28	3767677.3	0.0003104	0.0005984	0.000288	0	0
396266.283767677.28	396266.28	3767677.3	0.0003558	0.0006823	0.0003265	0	0
396366.283767677.28	396366.28	3767677.3	0.0004224	0.000808	0.0003856	0	0
396466.283767677.28	396466.28	3767677.3	0.0005067	0.0009691	0.0004623	0	0
396566.283767677.28	396566.28	3767677.3	0.0005873	0.0011199	0.0005327	0	0
396666.283767677.28	396666.28	3767677.3	0.0006374	0.0012124	0.000575	0	0
396766.283767677.28	396766.28	3767677.3	0.0007151	0.0013586	0.0006435	0	0
396866.283767677.28	396866.28	3767677.3	0.000795	0.0015093	0.0007143	0	0
396966.283767677.28	396966.28	3767677.3	0.0008374	0.0015889	0.0007514	0	0
397066.283767677.28	397066.28	3767677.3	0.0007995	0.0015177	0.0007183	0	0
397166.283767677.28	397166.28	3767677.3	0.0007377	0.0014017	0.000664	0	0
397266.283767677.28	397266.28	3767677.3	0.0006673	0.0012681	0.0006009	0	0
397366.283767677.28	397366.28	3767677.3	0.0005541	0.0010568	0.0005027	0	0
397466.283767677.28	397466.28	3767677.3	0.0004781	0.0009117	0.0004337	0	0
397566.283767677.28	397566.28	3767677.3	0.0003953	0.0007561	0.0003608	0	0
397666.283767677.28	397666.28	3767677.3	0.0003288	0.0006307	0.0003019	0	0
397766.283767677.28	397766.28	3767677.3	0.0002762	0.0005313	0.0002551	0	0
397866.283767677.28	397866.28	3767677.3	0.0002337	0.0004511	0.0002174	0	0
396166.283767777.28	396166.28	3767777.3	0.0003433	0.000662	0.0003187	0	0
396266.283767777.28	396266.28	3767777.3	0.000419	0.0008064	0.0003874	0	0
396366.283767777.28	396366.28	3767777.3	0.0005055	0.0009676	0.0004621	0	0

Garvey Reservoir Rehab - Unmitigated Reservoir Cover and Liner Work

Cancer Risk Summary & Maximum Annual GLC for Chronic Calculations

Cancer Risk Summary

Max Risk: 2.359732

XY	X	Y	Offroad Risk	Haul Risk	Total Risk
396466.283767777.28	396466.28	3767777.3	0.15713557	0.007544706	0.164680276
396566.283767777.28	396566.28	3767777.3	0.186680461	0.007143244	0.193823705
396666.283767777.28	396666.28	3767777.3	0.224585225	0.00751252	0.232097745
396766.283767777.28	396766.28	3767777.3	0.27633634	0.008234425	0.284570765
396866.283767777.28	396866.28	3767777.3	0.3276169	0.008793689	0.336410589
396966.283767777.28	396966.28	3767777.3	0.355750124	0.008685873	0.364435997
397066.283767777.28	397066.28	3767777.3	0.340502117	0.008697787	0.349199904
397166.283767777.28	397166.28	3767777.3	0.29928344	0.008709669	0.307993108
397266.283767777.28	397266.28	3767777.3	0.255381594	0.008103454	0.263485048
397366.283767777.28	397366.28	3767777.3	0.198724685	0.007946324	0.206671009
397466.283767777.28	397466.28	3767777.3	0.158387048	0.006857435	0.165244483
397566.283767777.28	397566.28	3767777.3	0.123615985	0.006325639	0.129941624
397666.283767777.28	397666.28	3767777.3	0.097605267	0.006019977	0.103625244
397766.283767777.28	397766.28	3767777.3	0.079513902	0.00537503	0.084888932
397866.283767777.28	397866.28	3767777.3	0.065837751	0.004900381	0.070738132
396166.283767877.28	396166.28	3767877.3	0.094071094	0.007143619	0.101214712
396266.283767877.28	396266.28	3767877.3	0.118860369	0.008251005	0.127111373
396366.283767877.28	396366.28	3767877.3	0.151719173	0.00872198	0.160441154
396466.283767877.28	396466.28	3767877.3	0.192637496	0.008276267	0.200913763
396566.283767877.28	396566.28	3767877.3	0.24652113	0.008191361	0.254712491
397466.283767877.28	397466.28	3767877.3	0.207515066	0.009603711	0.217118776
397566.283767877.28	397566.28	3767877.3	0.153120829	0.007564321	0.16068515
397666.283767877.28	397666.28	3767877.3	0.115696632	0.006376529	0.122073161
397766.283767877.28	397766.28	3767877.3	0.090546932	0.005644297	0.096191229
397866.283767877.28	397866.28	3767877.3	0.072315401	0.005653654	0.077969056
396166.283767977.28	396166.28	3767977.3	0.099387372	0.007487709	0.10687508
396266.283767977.28	396266.28	3767977.3	0.130183741	0.008652815	0.138836556
396366.283767977.28	396366.28	3767977.3	0.173795244	0.009358936	0.18315418
396466.283767977.28	396466.28	3767977.3	0.23323544	0.008992087	0.242227527
397466.283767977.28	397466.28	3767977.3	0.291253957	0.011326332	0.302580289
397566.283767977.28	397566.28	3767977.3	0.189523819	0.00914671	0.198670528
397666.283767977.28	397666.28	3767977.3	0.134498837	0.007592159	0.142090995
397766.283767977.28	397766.28	3767977.3	0.099867939	0.00764775	0.10751569
397866.283767977.28	397866.28	3767977.3	0.077071017	0.006993713	0.08406473
396166.283768077.28	396166.28	3768077.3	0.107076452	0.010094094	0.117170546
396266.283768077.28	396266.28	3768077.3	0.13896411	0.00956646	0.14853057
396366.283768077.28	396366.28	3768077.3	0.193308288	0.010381281	0.203689569
396466.283768077.28	396466.28	3768077.3	0.286238034	0.011238031	0.297476064
397466.283768077.28	397466.28	3768077.3	0.390050632	0.019655455	0.409706086
397566.283768077.28	397566.28	3768077.3	0.224535166	0.015532905	0.24006807
397666.283768077.28	397666.28	3768077.3	0.151068405	0.011653507	0.162721911
397766.283768077.28	397766.28	3768077.3	0.110941016	0.009098965	0.120039981
397866.283768077.28	397866.28	3768077.3	0.084289542	0.007886711	0.092176253
396166.283768177.28	396166.28	3768177.3	0.110490484	0.012173958	0.122664443
396266.283768177.28	396266.28	3768177.3	0.147624337	0.012573823	0.160198161
396366.283768177.28	396366.28	3768177.3	0.213241829	0.01368808	0.226929908
396466.283768177.28	396466.28	3768177.3	0.331311263	0.013478084	0.344789348
397466.283768177.28	397466.28	3768177.3	0.46355744	0.042986028	0.506543468
397566.283768177.28	397566.28	3768177.3	0.256282658	0.022549299	0.278831956
397666.283768177.28	397666.28	3768177.3	0.165965998	0.015387998	0.181353996
397766.283768177.28	397766.28	3768177.3	0.120562379	0.011347442	0.131909821
397866.283768177.28	397866.28	3768177.3	0.089445631	0.009311049	0.09875668
396166.283768277.28	396166.28	3768277.3	0.110650673	0.014478838	0.125129512
396266.283768277.28	396266.28	3768277.3	0.146092528	0.014248284	0.160340813
396366.283768277.28	396366.28	3768277.3	0.214273046	0.01599446	0.230267506
396466.283768277.28	396466.28	3768277.3	0.348651741	0.016551345	0.365203086
397366.283768277.28	397366.28	3768277.3	1.013016325	0.341642319	1.354658644
397466.283768277.28	397466.28	3768277.3	0.481488616	0.067064574	0.548553189
397566.283768277.28	397566.28	3768277.3	0.282773943	0.030617051	0.313390994
397666.283768277.28	397666.28	3768277.3	0.180453107	0.019184192	0.199637299
397766.283768277.28	397766.28	3768277.3	0.127170182	0.013742365	0.140912547
397866.283768277.28	397866.28	3768277.3	0.097194783	0.010579513	0.107774295
396166.283768377.28	396166.28	3768377.3	0.106816145	0.017063496	0.123879641
396266.283768377.28	396266.28	3768377.3	0.14066612	0.017767487	0.158433607
396366.283768377.28	396366.28	3768377.3	0.20281952	0.019837313	0.222656833
396466.283768377.28	396466.28	3768377.3	0.326876025	0.021402135	0.348278161
397266.283768377.28	397266.28	3768377.3	1.25753509	0.536338257	1.793873348
397366.283768377.28	397366.28	3768377.3	0.763671861	0.241228505	1.004900366
397466.283768377.28	397466.28	3768377.3	0.457650464	0.077838801	0.535489265
397566.283768377.28	397566.28	3768377.3	0.294077292	0.037368793	0.331446085
397666.283768377.28	397666.28	3768377.3	0.197673443	0.022650771	0.220324214
397766.283768377.28	397766.28	3768377.3	0.13956482	0.015923851	0.15548867
397866.283768377.28	397866.28	3768377.3	0.106926275	0.011454607	0.118380882
396166.283768477.28	396166.28	3768477.3	0.100058164	0.020934605	0.120992769
396266.283768477.28	396266.28	3768477.3	0.131485278	0.022561023	0.154046301

Max GLC for Chronic Calcs

Max GLC: 0.014825

XY	X	Y	2025	2026	2027	2034	2035
396466.283767777.28	396466.28	3767777.3	0.0006204	0.0011838	0.0005634	0	0
396566.283767777.28	396566.28	3767777.3	0.0007353	0.0013975	0.0006622	0	0
396666.283767777.28	396666.28	3767777.3	0.0008835	0.001676	0.0007925	0	0
396766.283767777.28	396766.28	3767777.3	0.0010861	0.0020573	0.0009711	0	0
396866.283767777.28	396866.28	3767777.3	0.0012867	0.0024343	0.0011476	0	0
396966.283767777.28	396966.28	3767777.3	0.0013964	0.0026391	0.0012427	0	0
397066.283767777.28	397066.28	3767777.3	0.0013369	0.0025279	0.001191	0	0
397166.283767777.28	397166.28	3767777.3	0.0011761	0.0022271	0.001051	0	0
397266.283767777.28	397266.28	3767777.3	0.0010042	0.0019037	0.0008994	0	0
397366.283767777.28	397366.28	3767777.3	0.000783	0.0014893	0.0007063	0	0
397466.283767777.28	397466.28	3767777.3	0.0006246	0.0011896	0.000565	0	0
397566.283767777.28	397566.28	3767777.3	0.0004884	0.0009332	0.0004448	0	0
397666.283767777.28	397666.28	3767777.3	0.0003867	0.0007418	0.0003552	0	0
397766.283767777.28	397766.28	3767777.3	0.0003155	0.0006066	0.0002912	0	0
397866.283767777.28	397866.28	3767777.3	0.0002616	0.0005045	0.0002429	0	0
396166.283767877.28	396166.28	3767877.3	0.000374	0.0007215	0.0003476	0	0
396266.283767877.28	396266.28	3767877.3	0.0004718	0.0009079	0.0004361	0	0
396366.283767877.28	396366.28	3767877.3	0.0006004	0.00115	0.0005496	0	0
396466.283767877.28	396466.28	3767877.3	0.0007596	0.0014465	0.0006869	0	0
396566.283767877.28	396566.28	3767877.3	0.0009698	0.0018394	0.0008697	0	0
397466.283767877.28	397466.28	3767877.3	0.000819	0.0015616	0.0007426	0	0
397566.283767877.28	397566.28	3767877.3	0.0006048	0.0011546	0.0005498	0	0
397666.283767877.28	397666.28	3767877.3	0.0004576	0.0008756	0.000418	0	0
397766.283767877.28	397766.28	3767877.3	0.0003588	0.0006885	0.0003297	0	0
397866.283767877.28	397866.28	3767877.3	0.0002876	0.0005555	0.0002678	0	0
396166.283767977.28	396166.28	3767977.3	0.0003951	0.000762	0.000367	0	0
396266.283767977.28	396266.28	3767977.3	0.0005163	0.0009925	0.0004762	0	0
396366.283767977.28	396366.28	3767977.3	0.0006872	0.0013143	0.0006271	0	0
396466.283767977.28	396466.28	3767977.3	0.0009187	0.0017463	0.0008276	0	0
397466.283767977.28	397466.28	3767977.3	0.0011473	0.0021812	0.0010339	0	0
397566.283767977.28	397566.28	3767977.3	0.0007483	0.001428	0.0006797	0	0
397666.283767977.28	397666.28	3767977.3	0.0005321	0.0010188	0.0004867	0	0
397766.283767977.28	397766.28	3767977.3	0.0003971	0.0007663	0.0003692	0	0
397866.283767977.28	397866.28	3767977.3	0.0003075	0.0005967	0.0002892	0	0
396166.283768077.28	396166.28	3768077.3	0.0004276	0.0008309	0.0004033	0	0
396266.283768077.28	396266.28	3768077.3	0.0005515	0.001061	0.0005096	0	0
396366.283768077.28	396366.28	3768077.3	0.0007643	0.0014617	0.0006974	0	0
396466.283768077.28	396466.28	3768077.3	0.0011277	0.0021442	0.0010165	0	0
397466.283768077.28	397466.28	3768077.3	0.0015409	0.0029431	0.0014022	0	0
397566.283768077.28	397566.28	3768077.3	0.0008912	0.0017148	0.0008236	0	0
397666.283768077.28	397666.28	3768077.3	0.0006007	0.0011596	0.0005588	0	0
397766.283768077.28	397766.28	3768077.3	0.0004417	0.0008542	0.0004125	0	0
397866.283768077.28	397866.28	3768077.3	0.0003365	0.0006538	0.0003172	0	0
396166.283768177.28	396166.28	3768177.3	0.0004429	0.0008659	0.000423	0	0
396266.283768177.28	396266.28	3768177.3	0.0005882	0.0011389	0.0005507	0	0
396366.283768177.28	396366.28	3768177.3	0.0008453	0.0016233	0.0007781	0	0
396466.283768177.28	396466.28	3768177.3	0.0013057	0.0024841	0.0011784	0	0
397466.283768177.28	397466.28	3768177.3	0.0018505	0.0035935	0.0017431	0	0
397566.283768177.28	397566.28	3768177.3	0.0010219	0.0019808	0.0009589	0	0
397666.283768177.28	397666.28	3768177.3	0.0006625	0.0012866	0.0006241	0	0
397766.283768177.28	397766.28	3768177.3	0.0004814	0.0009354	0.000454	0	0
397866.283768177.28	397866.28	3768177.3	0.000358	0.0006984	0.0003403	0	0
396166.283768277.28	396166.28	3768277.3	0.0004458	0.0008784	0.0004326	0	0
396266.283768277.28	396266.28	3768277.3	0.0005839	0.0011359	0.0005521	0	0
396366.283768277.28	396366.28	3768277.3	0.0008516	0.0016421	0.0007906	0	0
396466.283768277.28	396466.28	3768277.3	0.0013764	0.0026257	0.0012494	0	0
397366.283768277.28	397366.28	3768277.3	0.0042858	0.0090627	0.0047769	0	0
397466.283768277.28	397466.28	3768277.3	0.0019439	0.003842	0.0018981	0	0
397566.283768277.28	397566.28	3768277.3	0.0011331	0.0022136	0.0010805	0	0
397666.283768277.28	397666.28	3768277.3	0.0007227	0.0014109	0.0006881	0	0
397766.283768277.28	397766.28	3768277.3	0.0005096	0.0009954	0.0004858	0	0
397866.283768277.28	397866.28	3768277.3	0.0003895	0.0007611	0.0003716	0	0
396166.283768377.28	396166.28	3768377.3	0.0004334	0.000863	0.0004296	0	0
396266.283768377.28	396266.28	3768377.3	0.0005661	0.0011135	0.0005474	0	0
396366.283768377.28	396366.28	3768377.3	0.0008106	0.0015773	0.0007667	0	0
396466.283768377.28	396466.28	3768377.3	0.0012961	0.0024905	0.0011943	0	0
397266.283768377.28	397266.28	3768377.3	0.0054299	0.0117984	0.0063685	0	0
397366.283768377.28	397366.28	3768377.3	0.0032149	0.0067523	0.0035374	0	0
397466.283768377.28	397466.28	3768377.3	0.0018615	0.0037206	0.0018592	0	0
397566.283768377.28	397566.28	3768377.3	0.0011838	0.002329	0.0011452	0	0
397666.283768377.28	397666.28	3768377.3	0.0007933	0.0015535	0.0007602	0	0
397766.283768377.28	397766.28	3768377.3	0.00056	0.0010965	0.0005364	0	0
397866.283768377.28	397866.28	3768377.3	0.0004283	0.0008364	0.0004081	0	0
396166.283768477.28	396166.28	3768477.3	0.0004108	0.0008326	0.0004218	0	0
396266.283768477.28	396266.28	3768477.3	0.000535	0.0010699	0.0005349	0	0

Garvey Reservoir Rehab - Unmitigated Reservoir Cover and Liner Work

Cancer Risk Summary & Maximum Annual GLC for Chronic Calculations

Cancer Risk Summary

Max Risk: 2.359732

XY	X	Y	Offroad Risk	Haul Risk	Total Risk
396366.283768477.28	396366.28	3768477.3	0.185569149	0.025006821	0.210575969
396466.283768477.28	396466.28	3768477.3	0.276416435	0.028001841	0.304418276
397166.283768477.28	397166.28	3768477.3	0.943073726	0.099683659	1.042757386
397266.283768477.28	397266.28	3768477.3	0.798342806	0.544412923	1.342755728
397366.283768477.28	397366.28	3768477.3	0.592029159	0.220566465	0.812595624
397466.283768477.28	397466.28	3768477.3	0.410805142	0.071733545	0.482538687
397566.283768477.28	397566.28	3768477.3	0.274293928	0.042878817	0.317172746
397666.283768477.28	397666.28	3768477.3	0.193848927	0.026607508	0.220456435
397766.283768477.28	397766.28	3768477.3	0.147544243	0.016833413	0.164377656
397866.283768477.28	397866.28	3768477.3	0.110590602	0.013122748	0.12371335
396166.283768577.28	396166.28	3768577.3	0.089445631	0.026638299	0.11608393
396266.283768577.28	396266.28	3768577.3	0.118339754	0.030027896	0.148367649
396366.283768577.28	396366.28	3768577.3	0.159998951	0.032396275	0.192395226
396466.283768577.28	396466.28	3768577.3	0.224715378	0.038901595	0.263616973
396566.283768577.28	396566.28	3768577.3	0.355519852	0.038098501	0.393618354
396866.283768577.28	396866.28	3768577.3	0.940140262	0.048754686	0.988894948
396966.283768577.28	396966.28	3768577.3	0.861297152	0.056610744	0.917907896
397066.283768577.28	397066.28	3768577.3	0.734146993	0.069964966	0.804111959
397166.283768577.28	397166.28	3768577.3	0.638433961	0.119790473	0.758224434
397266.283768577.28	397266.28	3768577.3	0.539116672	0.528120364	1.067237036
397366.283768577.28	397366.28	3768577.3	0.447007895	0.221208052	0.668215948
397466.283768577.28	397466.28	3768577.3	0.342784813	0.070879892	0.413664705
397566.283768577.28	397566.28	3768577.3	0.253649548	0.042428864	0.296078412
397666.283768577.28	397666.28	3768577.3	0.188142187	0.028207121	0.216349308
397766.283768577.28	397766.28	3768577.3	0.1413269	0.020073139	0.16140004
397866.283768577.28	397866.28	3768577.3	0.11041039	0.0146562	0.12506659
396166.283768677.28	396166.28	3768677.3	0.080635226	0.046796857	0.127432083
396266.283768677.28	396266.28	3768677.3	0.101990446	0.053427498	0.155417944
396366.283768677.28	396366.28	3768677.3	0.135329818	0.051878667	0.187208485
396466.283768677.28	396466.28	3768677.3	0.179421889	0.063690653	0.243112542
396566.283768677.28	396566.28	3768677.3	0.253559442	0.064385537	0.317944979
396666.283768677.28	396666.28	3768677.3	0.355940349	0.065734615	0.421674964
396766.283768677.28	396766.28	3768677.3	0.460754129	0.068215105	0.528969235
396866.283768677.28	396866.28	3768677.3	0.528063619	0.075758462	0.603822081
396966.283768677.28	396966.28	3768677.3	0.530957035	0.082925795	0.613882831
397066.283768677.28	397066.28	3768677.3	0.499319673	0.096193144	0.595512817
397166.283768677.28	397166.28	3768677.3	0.448779988	0.150977052	0.599757041
397366.283768677.28	397366.28	3768677.3	0.344767154	0.200767423	0.545534576
397466.283768677.28	397466.28	3768677.3	0.280911744	0.080890054	0.361801797
397566.283768677.28	397566.28	3768677.3	0.222743049	0.044111839	0.266854888
397666.283768677.28	397666.28	3768677.3	0.174546131	0.028901368	0.203447499
397766.283768677.28	397766.28	3768677.3	0.135790362	0.021317175	0.157107537
397866.283768677.28	397866.28	3768677.3	0.108588238	0.015652973	0.124241211
396166.283768777.28	396166.28	3768777.3	0.073416702	0.135884725	0.209301426
396266.283768777.28	396266.28	3768777.3	0.089485678	0.168846426	0.258332105
396366.283768777.28	396366.28	3768777.3	0.114655403	0.123783358	0.23843876
396466.283768777.28	396466.28	3768777.3	0.146172623	0.161750232	0.307922855
396566.283768777.28	396566.28	3768777.3	0.186970804	0.173212914	0.360183718
396666.283768777.28	396666.28	3768777.3	0.241805561	0.173152164	0.414957725
396766.283768777.28	396766.28	3768777.3	0.300835272	0.179116834	0.479952106
396866.283768777.28	396866.28	3768777.3	0.34408635	0.186223169	0.530309519
396966.283768777.28	396966.28	3768777.3	0.359174168	0.190815731	0.549989899
397066.283768777.28	397066.28	3768777.3	0.352846695	0.205568442	0.558415138
397166.283768777.28	397166.28	3768777.3	0.329559194	0.24755512	0.577114314
397266.283768777.28	397266.28	3768777.3	0.305130345	0.789579025	1.09470937
397366.283768777.28	397366.28	3768777.3	0.268216751	0.27434406	0.542560811
397466.283768777.28	397466.28	3768777.3	0.226227164	0.096492833	0.322719997
397566.283768777.28	397566.28	3768777.3	0.187110969	0.051751646	0.238862616
397666.283768777.28	397666.28	3768777.3	0.153501278	0.032547586	0.186048864
397766.283768777.28	397766.28	3768777.3	0.12545816	0.022282443	0.147740603
397866.283768777.28	397866.28	3768777.3	0.103472196	0.016220202	0.119692398
396166.283768877.28	396166.28	3768877.3	0.065417255	0.547086047	0.612503302
396266.283768877.28	396266.28	3768877.3	0.079223559	0.704587189	0.783810748
396366.283768877.28	396366.28	3768877.3	0.095572867	0.689931655	0.785504522
396466.283768877.28	396466.28	3768877.3	0.120612438	0.760012562	0.880624999
396566.283768877.28	396566.28	3768877.3	0.148174988	0.716797291	0.864972278
396666.283768877.28	396666.28	3768877.3	0.179902456	0.778758287	0.958660744
396766.283768877.28	396766.28	3768877.3	0.216095198	0.753719782	0.96981498
396866.283768877.28	396866.28	3768877.3	0.253018803	0.732162188	0.985180991
396966.283768877.28	396966.28	3768877.3	0.266624872	0.704034357	0.970659228
397066.283768877.28	397066.28	3768877.3	0.262760308	0.711761464	0.974521771
397166.283768877.28	397166.28	3768877.3	0.252157787	0.731546029	0.983703816
397266.283768877.28	397266.28	3768877.3	0.237400359	0.76854799	1.005948348
397366.283768877.28	397366.28	3768877.3	0.213011557	0.377888182	0.590899738
397466.283768877.28	397466.28	3768877.3	0.186760556	0.101129876	0.287890432

Max GLC for Chronic Calcs

Max GLC: 0.014825

XY	X	Y	2025	2026	2027	2034	2035
396366.283768477.28	396366.28	3768477.3	0.0007484	0.0014766	0.0007282	0	0
396466.283768477.28	396466.28	3768477.3	0.0011057	0.0021544	0.0010486	0	0
397166.283768477.28	397166.28	3768477.3	0.0037766	0.0073705	0.0035939	0	0
397266.283768477.28	397266.28	3768477.3	0.0036463	0.0084861	0.0048397	0	0
397366.283768477.28	397366.28	3768477.3	0.0025251	0.0053985	0.0028734	0	0
397466.283768477.28	397466.28	3768477.3	0.0016727	0.0033489	0.0016761	0	0
397566.283768477.28	397566.28	3768477.3	0.001112	0.0022115	0.0010996	0	0
397666.283768477.28	397666.28	3768477.3	0.0007823	0.0015449	0.0007626	0	0
397766.283768477.28	397766.28	3768477.3	0.0005921	0.0011592	0.0005671	0	0
397866.283768477.28	397866.28	3768477.3	0.0004443	0.0008713	0.000427	0	0
396166.283768577.28	396166.28	3768577.3	0.000375	0.000783	0.000408	0	0
396266.283768577.28	396266.28	3768577.3	0.000491	0.0010104	0.0005194	0	0
396366.283768577.28	396366.28	3768577.3	0.0006558	0.0013261	0.0006702	0	0
396466.283768577.28	396466.28	3768577.3	0.0009147	0.0018302	0.0009156	0	0
396566.283768577.28	396566.28	3768577.3	0.0014242	0.0027811	0.0013569	0	0
396866.283768577.28	396866.28	3768577.3	0.0037154	0.0071004	0.003385	0	0
396966.283768577.28	396966.28	3768577.3	0.0034155	0.0065633	0.0031478	0	0
397066.283768577.28	397066.28	3768577.3	0.0029325	0.0057004	0.0027679	0	0
397166.283768577.28	397166.28	3768577.3	0.0026077	0.0052451	0.0026374	0	0
397266.283768577.28	397266.28	3768577.3	0.0026191	0.0065144	0.0038953	0	0
397366.283768577.28	397366.28	3768577.3	0.00196	0.0043431	0.0023832	0	0
397466.283768577.28	397466.28	3768577.3	0.0014065	0.0028482	0.0014417	0	0
397566.283768577.28	397566.28	3768577.3	0.001031	0.0020587	0.0010276	0	0
397666.283768577.28	397666.28	3768577.3	0.0007616	0.001511	0.0007495	0	0
397766.283768577.28	397766.28	3768577.3	0.000571	0.0011296	0.0005586	0	0
397866.283768577.28	397866.28	3768577.3	0.0004451	0.0008775	0.0004324	0	0
396166.283768677.28	396166.28	3768677.3	0.0003603	0.0008171	0.0004568	0	0
396266.283768677.28	396266.28	3768677.3	0.0004501	0.0010054	0.0005553	0	0
396366.283768677.28	396366.28	3768677.3	0.0005786	0.0012412	0.0006625	0	0
396466.283768677.28	396466.28	3768677.3	0.0007622	0.0016207	0.0008585	0	0
396566.283768677.28	396566.28	3768677.3	0.0010521	0.0021652	0.0011131	0	0
396666.283768677.28	396666.28	3768677.3	0.0014528	0.0029191	0.0014663	0	0
396766.283768677.28	396766.28	3768677.3	0.0018642	0.0036963	0.0018321	0	0
396866.283768677.28	396866.28	3768677.3	0.0021341	0.0042244	0.0020903	0	0
396966.283768677.28	396966.28	3768677.3	0.0021524	0.0042806	0.0021281	0	0
397066.283768677.28	397066.28	3768677.3	0.002042	0.0041144	0.0020725	0	0
397166.283768677.28	397166.28	3768677.3	0.0018983	0.0040131	0.0021148	0	0
397366.283768677.28	397366.28	3768677.3	0.0015411	0.003497	0.0019559	0	0
397466.283768677.28	397466.28	3768677.3	0.0011749	0.0024455	0.0012706	0	0
397566.283768677.28	397566.28	3768677.3	0.0009121	0.0018413	0.0009292	0	0
397666.283768677.28	397666.28	3768677.3	0.0007092	0.0014152	0.000706	0	0
397766.283768677.28	397766.28	3768677.3	0.0005506	0.0010953	0.0005447	0	0
397866.283768677.28	397866.28	3768677.3	0.0004389	0.0008691	0.0004301	0	0
396166.283768777.28	396166.28	3768777.3	0.0004191	0.0011995	0.0007804	0	0
396266.283768777.28	396266.28	3768777.3	0.000514	0.0014778	0.0009638	0	0
396366.283768777.28	396366.28	3768777.3	0.0005682	0.0014414	0.0008732	0	0
396466.283768777.28	396466.28	3768777.3	0.0007283	0.0018569	0.0011286	0	0
396566.283768777.28	396566.28	3768777.3	0.0008986	0.0022107	0.0013121	0	0
396666.283768777.28	396666.28	3768777.3	0.0011125	0.0026106	0.0014981	0	0
396766.283768777.28	396766.28	3768777.3	0.0013486	0.0030706	0.001722	0	0
396866.283768777.28	396866.28	3768777.3	0.0015243	0.003421	0.0018968	0	0
396966.283768777.28	396966.28	3768777.3	0.0015876	0.0035536	0.001966	0	0
397066.283768777.28	397066.28	3768777.3	0.0015774	0.0035795	0.0020021	0	0
397166.283768777.28	397166.28	3768777.3	0.0015275	0.0036145	0.002087	0	0
397266.283768777.28	397266.28	3768777.3	0.0019616	0.0060834	0.0041217	0	0
397366.283768777.28	397366.28	3768777.3	0.0013144	0.0032976	0.0019833	0	0
397466.283768777.28	397466.28	3768777.3	0.0009768	0.0021225	0.0011457	0	0
397566.283768777.28	397566.28	3768777.3	0.0007805	0.0016185	0.000838	0	0
397666.283768777.28	397666.28	3768777.3	0.0006306	0.0012794	0.0006487	0	0
397766.283768777.28	397766.28	3768777.3	0.0005112	0.0010246	0.0005134	0	0
397866.283768777.28	397866.28	3768777.3	0.0004195	0.0008345	0.000415	0	0
396166.283768877.28	396166.28	3768877.3	0.0007896	0.0031494	0.0023598	0	0
396266.283768877.28	396266.28	3768877.3	0.0009973	0.0040193	0.003022	0	0
396366.283768877.28	396366.28	3768877.3	0.0010468	0.0040671	0.0030203	0	0
396466.283768877.28	396466.28	3768877.3	0.0012129	0.0045921	0.0033792	0	0
396566.283768877.28	396566.28	3768877.3	0.0012782	0.0045823	0.003304	0	0
396666.283768877.28	396666.28	3768877.3	0.0014625	0.0051165	0.0036539	0	0
396766.283768877.28	396766.28	3768877.3	0.0015793	0.0052583	0.0036791	0	0
396866.283768877.28	396866.28	3768877.3	0.0017023	0.0054226	0.0037203	0	0
396966.283768877.28	396966.28	3768877.3	0.0017279	0.0053845	0.0036567	0	0
397066.283768877.28	397066.28	3768877.3	0.0017203	0.005394	0.0036737	0	0
397166.283768877.28	397166.28	3768877.3	0.0016983	0.0054133	0.003715	0	0
397266.283768877.28	397266.28	3768877.3	0.0016769	0.0054863	0.0038094	0	0
397366.283768877.28	397366.28	3768877.3	0.0012001	0.0034003	0.0022002	0	0
397466.283768877.28	397466.28	3768877.3	0.0008274	0.0018571	0.0010297	0	0

Garvey Reservoir Rehab - Unmitigated Reservoir Cover and Liner Work

Cancer Risk Summary & Maximum Annual GLC for Chronic Calculations

Cancer Risk Summary

Max Risk: 2.359732

XY	X	Y	Offroad Risk	Haul Risk	Total Risk
397566.283768877.28	397566.28	3768877.3	0.160289294	0.051712001	0.212001295
397666.283768877.28	397666.28	3768877.3	0.134699073	0.032076431	0.166775505
397766.283768877.28	397766.28	3768877.3	0.11354409	0.02217271	0.1357168
397866.283768877.28	397866.28	3768877.3	0.09652399	0.016410429	0.112934419
3964253767739	396425	3767739	0.135149605	0.00737536	0.142524965
3964753767739	396475	3767739	0.148575461	0.00755157	0.156127031
3965253767739	396525	3767739	0.159868798	0.007038635	0.166907433
3965753767739	396575	3767739	0.175266982	0.007242112	0.182509094
3966253767739	396625	3767739	0.183927209	0.006955438	0.190882647
3966753767739	396675	3767739	0.198924921	0.007117469	0.20604239
3967253767739	396725	3767739	0.221681796	0.007438437	0.229120233
3967753767739	396775	3767739	0.233846161	0.007500957	0.241347118
3968253767739	396825	3767739	0.25365956	0.007923652	0.261583212
3968753767739	396875	3767739	0.272962356	0.008154424	0.28111678
3969253767739	396925	3767739	0.282854037	0.008131906	0.290985943
3969753767739	396975	3767739	0.28676866	0.008077909	0.294846569
3970253767739	397025	3767739	0.282824002	0.008043894	0.290867896
3970753767739	397075	3767739	0.271540677	0.008084965	0.279625642
3971253767739	397125	3767739	0.257303864	0.008094838	0.265398701
3971753767739	397175	3767739	0.242706625	0.007988397	0.250695022
3972253767739	397225	3767739	0.226137057	0.007818883	0.23395594
3972753767739	397275	3767739	0.21171002	0.007374137	0.219084157
3973253767739	397325	3767739	0.189684008	0.007377092	0.1970611
3973753767739	397375	3767739	0.168889451	0.007352641	0.176242092
3974253767739	397425	3767739	0.151468878	0.007155138	0.158624015
3974753767739	397475	3767739	0.139604867	0.006321577	0.145926444
3975253767739	397525	3767739	0.124767344	0.006111087	0.130878432
3964253767789	396425	3767789	0.148805733	0.007878582	0.156684314
3964753767789	396475	3767789	0.163673291	0.007590276	0.171263566
3965253767789	396525	3767789	0.17855086	0.007188694	0.185739554
3965753767789	396575	3767789	0.194780026	0.007275701	0.202055727
3966253767789	396625	3767789	0.215013921	0.007467256	0.222481178
3966753767789	396675	3767789	0.239152428	0.00769147	0.246843898
3967253767789	396725	3767789	0.271290381	0.008296561	0.279586942
3967753767789	396775	3767789	0.296129715	0.008498293	0.304628009
3968253767789	396825	3767789	0.326215245	0.008879045	0.33509429
3968753767789	396875	3767789	0.351815478	0.009005891	0.360821368
3969253767789	396925	3767789	0.368855601	0.009001824	0.377857425
3969753767789	396975	3767789	0.382161315	0.008891039	0.391052354
3970253767789	397025	3767789	0.379237862	0.008841338	0.3880792
3970753767789	397075	3767789	0.362598212	0.008924149	0.37152236
3971253767789	397125	3767789	0.339701171	0.008988671	0.348689843
3971753767789	397175	3767789	0.314621553	0.00894829	0.323569844
3972253767789	397225	3767789	0.286808708	0.008836268	0.295644976
3972753767789	397275	3767789	0.264131927	0.00834712	0.272479047
3973253767789	397325	3767789	0.233956291	0.008144322	0.242100613
3973753767789	397375	3767789	0.20248913	0.008170324	0.210659455
3974253767789	397425	3767789	0.176708685	0.008003053	0.184711738
3974753767789	397475	3767789	0.160069034	0.006973977	0.167043011
3975253767789	397525	3767789	0.140395801	0.00676401	0.147159811
3964253767839	396425	3767839	0.163793432	0.008411512	0.172204945
3964753767839	396475	3767839	0.183746997	0.008357988	0.192104985
3965253767839	396525	3767839	0.200026222	0.007579832	0.207606053
3965753767839	396575	3767839	0.224905603	0.00779748	0.232703083
3966253767839	396625	3767839	0.254130116	0.008032402	0.262162518
3966753767839	396675	3767839	0.299703936	0.008959286	0.308663222
3967253767839	396725	3767839	0.342514494	0.00938556	0.351900054
3967753767839	396775	3767839	0.386166044	0.009631528	0.395797572
3968253767839	396825	3767839	0.431619723	0.00987161	0.441491332
3968753767839	396875	3767839	0.473799535	0.009987511	0.483787046
3969253767839	396925	3767839	0.504936306	0.010017629	0.514953935
3969753767839	396975	3767839	0.533880488	0.009914438	0.543794926
3970253767839	397025	3767839	0.541089001	0.009835311	0.550924312
3970753767839	397075	3767839	0.505386838	0.010047528	0.515434366
3971253767839	397125	3767839	0.465900206	0.010232237	0.476132443
3971753767839	397175	3767839	0.432440692	0.010096984	0.442537677
3972253767839	397225	3767839	0.395066555	0.009707376	0.404773931
3972753767839	397275	3767839	0.348251269	0.009195739	0.357447008
3973253767839	397325	3767839	0.298943038	0.008766907	0.307709945
3973753767839	397375	3767839	0.248873908	0.009119985	0.257993894
3974753767839	397475	3767839	0.179942504	0.008596605	0.188539109
3975253767839	397525	3767839	0.158657367	0.007347189	0.166004556
3964253767889	396425	3767889	0.179622125	0.008894553	0.188516678
3964753767889	396475	3767889	0.198674625	0.007907701	0.206582327
3965253767889	396525	3767889	0.227008086	0.008115524	0.23512361

Max GLC for Chronic Calcs

Max GLC: 0.014825

XY	X	Y	2025	2026	2027	2034	2035
397566.283768877.28	397566.28	3768877.3	0.0006758	0.0014225	0.0007467	0	0
397666.283768877.28	397666.28	3768877.3	0.0005568	0.0011399	0.000583	0	0
397766.283768877.28	397766.28	3768877.3	0.0004646	0.0009371	0.0004724	0	0
397866.283768877.28	397866.28	3768877.3	0.0003926	0.0007847	0.0003921	0	0
3964253767739	396425	3767739	0.0005345	0.0010225	0.000488	0	0
3964753767739	396475	3767739	0.000587	0.0011214	0.0005344	0	0
3965253767739	396525	3767739	0.0006306	0.0012013	0.0005707	0	0
3965753767739	396575	3767739	0.0006908	0.0013147	0.0006238	0	0
3966253767739	396625	3767739	0.0007243	0.0013765	0.0006521	0	0
3966753767739	396675	3767739	0.000783	0.0014868	0.0007037	0	0
3967253767739	396725	3767739	0.0008721	0.0016544	0.0007823	0	0
3967753767739	396775	3767739	0.0009196	0.0017435	0.0008239	0	0
3968253767739	396825	3767739	0.0009973	0.0018902	0.0008929	0	0
3968753767739	396875	3767739	0.0010729	0.0020322	0.0009594	0	0
3969253767739	396925	3767739	0.0011114	0.0021043	0.0009929	0	0
3969753767739	396975	3767739	0.0011267	0.0021326	0.001006	0	0
3970253767739	397025	3767739	0.0011112	0.0021037	0.0009924	0	0
3970753767739	397075	3767739	0.0010673	0.0020215	0.0009543	0	0
3971253767739	397125	3767739	0.0010117	0.0019176	0.0009059	0	0
3971753767739	397175	3767739	0.0009547	0.0018106	0.0008559	0	0
3972253767739	397225	3767739	0.0008899	0.0016888	0.0007989	0	0
3972753767739	397275	3767739	0.0008331	0.0015813	0.0007482	0	0
3973253767739	397325	3767739	0.0007472	0.0014206	0.0006734	0	0
3973753767739	397375	3767739	0.0006661	0.0012687	0.0006026	0	0
3974253767739	397425	3767739	0.0005979	0.0011405	0.0005426	0	0
3974753767739	397475	3767739	0.0005508	0.0010499	0.0004991	0	0
3975253767739	397525	3767739	0.0004927	0.0009405	0.0004478	0	0
3964253767789	396425	3767789	0.0005882	0.0011246	0.0005364	0	0
3964753767789	396475	3767789	0.000646	0.0012318	0.0005858	0	0
3965253767789	396525	3767789	0.0007036	0.0013384	0.0006348	0	0
3965753767789	396575	3767789	0.000767	0.0014573	0.0006903	0	0
3966253767789	396625	3767789	0.0008461	0.0016059	0.0007598	0	0
3966753767789	396675	3767789	0.0009405	0.0017832	0.0008427	0	0
3967253767789	396725	3767789	0.0010665	0.0020207	0.0009542	0	0
3967753767789	396775	3767789	0.0011636	0.002203	0.0010394	0	0
3968253767789	396825	3767789	0.0012813	0.0024245	0.0011431	0	0
3968753767789	396875	3767789	0.0013813	0.002612	0.0012306	0	0
3969253767789	396925	3767789	0.0014478	0.0027363	0.0012885	0	0
3969753767789	396975	3767789	0.0014996	0.0028329	0.0013333	0	0
3970253767789	397025	3767789	0.0014882	0.0028113	0.0013232	0	0
3970753767789	397075	3767789	0.0014233	0.0026903	0.0012669	0	0
3971253767789	397125	3767789	0.0013341	0.0025234	0.0011894	0	0
3971753767789	397175	3767789	0.0012362	0.0023402	0.001104	0	0
3972253767789	397225	3767789	0.0011276	0.0021366	0.0010091	0	0
3972753767789	397275	3767789	0.0010386	0.0019687	0.0009301	0	0
3973253767789	397325	3767789	0.0009207	0.0017475	0.0008268	0	0
3973753767789	397375	3767789	0.000798	0.0015179	0.00072	0	0
3974253767789	397425	3767789	0.0006972	0.0013289	0.0006317	0	0
3974753767789	397475	3767789	0.0006313	0.0012024	0.0005711	0	0
3975253767789	397525	3767789	0.0005543	0.0010578	0.0005035	0	0
3964253767839	396425	3767839	0.0006472	0.0012366	0.0005894	0	0
3964753767839	396475	3767839	0.000725	0.001382	0.000657	0	0
3965253767839	396525	3767839	0.0007878	0.0014971	0.0007093	0	0
3965753767839	396575	3767839	0.000885	0.0016797	0.0007947	0	0
3966253767839	396625	3767839	0.0009993	0.0018942	0.0008949	0	0
3966753767839	396675	3767839	0.001178	0.0022314	0.0010534	0	0
3967253767839	396725	3767839	0.0013454	0.0025459	0.0012005	0	0
3967753767839	396775	3767839	0.001516	0.0028657	0.0013498	0	0
3968253767839	396825	3767839	0.0016935	0.0031987	0.0015052	0	0
3968753767839	396875	3767839	0.0018582	0.0035071	0.0016489	0	0
3969253767839	396925	3767839	0.0019797	0.0037346	0.0017549	0	0
3969753767839	396975	3767839	0.0020925	0.0039453	0.0018528	0	0
3970253767839	397025	3767839	0.0021206	0.0039976	0.001877	0	0
3970753767839	397075	3767839	0.0019815	0.003738	0.0017565	0	0
3971253767839	397125	3767839	0.0018276	0.0034507	0.0016231	0	0
3971753767839	397175	3767839	0.0016969	0.0032058	0.0015088	0	0
3972253767839	397225	3767839	0.0015508	0.0029311	0.0013803	0	0
3972753767839	397275	3767839	0.0013676	0.0025869	0.0012193	0	0
3973253767839	397325	3767839	0.0011748	0.0022249	0.00105	0	0
3973753767839	397375	3767839	0.0009798	0.0018611	0.0008813	0	0
3974753767839	397475	3767839	0.0007104	0.0013554	0.000645	0	0
3975253767839	397525	3767839	0.0006261	0.001194	0.0005678	0	0
3964253767889	396425	3767889	0.0007094	0.0013545	0.0006451	0	0
3964753767889	396475	3767889	0.0007828	0.0014888	0.000706	0	0
3965253767889	396525	3767889	0.0008936	0.0016966	0.0008031	0	0

Garvey Reservoir Rehab - Unmitigated Reservoir Cover and Liner Work

Cancer Risk Summary & Maximum Annual GLC for Chronic Calculations

Cancer Risk Summary

Max Risk: 2.359732

XY	X	Y	Offroad Risk	Haul Risk	Total Risk
3965753767889	396575	3767889	0.264262081	0.008483068	0.272745149
3974753767889	397475	3767889	0.211990351	0.00932679	0.221317141
3975253767889	397525	3767889	0.179642149	0.00810491	0.187747059
3964253767939	396425	3767939	0.196472024	0.009442425	0.20591445
3964753767939	396475	3767939	0.221061063	0.008487321	0.229548383
3965253767939	396525	3767939	0.259256169	0.008791333	0.268047503
3974753767939	397475	3767939	0.248483447	0.009909976	0.258393423
3975253767939	397525	3767939	0.203390194	0.009059092	0.212449286
3964253767989	396425	3767989	0.209467371	0.009263624	0.218730995
3964753767989	396475	3767989	0.246200752	0.009223522	0.255424274
3974753767989	397475	3767989	0.28995242	0.011388852	0.301341272
3975253767989	397525	3767989	0.229961574	0.010322071	0.240283645
3964253768039	396425	3768039	0.226807849	0.009986683	0.236794532
3964753768039	396475	3768039	0.274173786	0.010319002	0.284492788
3974753768039	397475	3768039	0.333403734	0.015204778	0.348608512
3975253768039	397525	3768039	0.255061215	0.014228029	0.269289244
3964253768089	396425	3768089	0.244779073	0.011012977	0.25579205
3964753768089	396475	3768089	0.303818796	0.011575114	0.31539391
3974753768089	397475	3768089	0.380519376	0.020465493	0.400984869
3975253768089	397525	3768089	0.280110798	0.018848019	0.298958817
3964253768139	396425	3768139	0.268877532	0.013713383	0.282590915
3964753768139	396475	3768139	0.329529159	0.012631746	0.342160905
3974253768139	397425	3768139	0.60592557	0.043417362	0.649342932
3974753768139	397475	3768139	0.414369351	0.031454438	0.445823789
3975253768139	397525	3768139	0.304139174	0.023733081	0.327872255
3964253768189	396425	3768189	0.279650254	0.014774169	0.294424423
3964753768189	396475	3768189	0.350944449	0.013827919	0.364772368
3973753768189	397375	3768189	1.02512062	0.257354353	1.282474973
3974253768189	397425	3768189	0.621814334	0.074336642	0.696150976
3974753768189	397475	3768189	0.442852989	0.042593515	0.485446504
3975253768189	397525	3768189	0.326365422	0.029326624	0.355692046
3964253768239	396425	3768239	0.284576071	0.015990297	0.300566369
3964753768239	396475	3768239	0.36406995	0.015290155	0.379360105
3973753768239	397375	3768239	1.009402057	0.374906371	1.384308428
3974253768239	397425	3768239	0.612903811	0.095337165	0.708240976
3974753768239	397475	3768239	0.433371792	0.051402864	0.484774656
3975253768239	397525	3768239	0.326785919	0.034868866	0.361654785
3964253768289	396425	3768289	0.280761566	0.017116475	0.297878041
3964753768289	396475	3768289	0.366052291	0.017035297	0.383087588
3973253768289	397325	3768289	1.366523801	0.993207846	2.359731647
3973753768289	397375	3768289	0.914079485	0.262917401	1.176996886
3974253768289	397425	3768289	0.645802663	0.11587655	0.761679213
3974753768289	397475	3768289	0.468242973	0.06388124	0.532124213
3975253768289	397525	3768289	0.349923243	0.041449316	0.391372559
3964253768339	396425	3768339	0.275365193	0.019394825	0.294760019
3964753768339	396475	3768339	0.356521035	0.01925012	0.375771155
3965253768339	396525	3768339	0.503274344	0.020520686	0.523795029
3972753768339	397275	3768339	1.489859455	0.806914999	2.296774454
3973253768339	397325	3768339	1.106396603	0.594859366	1.701255969
3973753768339	397375	3768339	0.806212099	0.219112211	1.025324309
3974253768339	397425	3768339	0.604403773	0.115210473	0.719614245
3974753768339	397475	3768339	0.459993231	0.069282883	0.529276113
3975253768339	397525	3768339	0.357742477	0.046029647	0.403772125
3964253768389	396425	3768389	0.261068309	0.021552621	0.282620931
3964753768389	396475	3768389	0.336106927	0.021938238	0.358045165
3965253768389	396525	3768389	0.464488539	0.022994196	0.487482736
3972253768389	397225	3768389	1.384084539	0.193980754	1.578065293
3972753768389	397275	3768389	1.139045159	0.768321207	1.907366366
3973253768389	397325	3768389	0.910655442	0.595057788	1.50571323
3973753768389	397375	3768389	0.706083852	0.210928617	0.917012469
3974253768389	397425	3768389	0.549368779	0.11540528	0.664774059
3974753768389	397475	3768389	0.432841165	0.072976081	0.505817246
3975253768389	397525	3768389	0.344536882	0.05012521	0.394662092
3964253768439	396425	3768439	0.248753767	0.02446122	0.273214986
3964753768439	396475	3768439	0.310346505	0.02519045	0.335536955
3965253768439	396525	3768439	0.414789847	0.02609854	0.440888388
3971753768439	397175	3768439	1.134619933	0.104503907	1.23912384
3972253768439	397225	3768439	1.059751517	0.203497176	1.263248693
3972753768439	397275	3768439	0.905359187	0.772121505	1.677480692
3973253768439	397325	3768439	0.772161887	0.580982029	1.353143916
3973753768439	397375	3768439	0.637623003	0.194975488	0.832598491
3974253768439	397425	3768439	0.518652504	0.106693114	0.625345618
3974753768439	397475	3768439	0.407541287	0.075551558	0.483092845
3975253768439	397525	3768439	0.330620447	0.053058325	0.383678773
3964253768489	396425	3768489	0.228009268	0.027901597	0.255910866

Max GLC for Chronic Calcs

Max GLC: 0.014825

XY	X	Y	2025	2026	2027	2034	2035
3965753767889	396575	3767889	0.0010393	0.0019703	0.0009311	0	0
3974753767889	397475	3767889	0.0008361	0.0015929	0.0007568	0	0
3975253767889	397525	3767889	0.0007088	0.0013508	0.0006421	0	0
3964253767939	396425	3767939	0.0007757	0.0014802	0.0007045	0	0
3964753767939	396475	3767939	0.0008707	0.001655	0.0007843	0	0
3965253767939	396525	3767939	0.00102	0.0019353	0.0009153	0	0
3974753767939	397475	3767939	0.0009791	0.0018621	0.000883	0	0
3975253767939	397525	3767939	0.0008023	0.0015288	0.0007265	0	0
3964253767989	396425	3767989	0.0008262	0.0015742	0.0007479	0	0
3964753767989	396475	3767989	0.0009695	0.0018421	0.0008726	0	0
3974753767989	397475	3767989	0.0011423	0.002172	0.0010297	0	0
3975253767989	397525	3767989	0.0009072	0.0017289	0.0008217	0	0
3964253768039	396425	3768039	0.0008946	0.0017043	0.0008097	0	0
3964753768039	396475	3768039	0.0010797	0.0020516	0.0009719	0	0
3974753768039	397475	3768039	0.0013156	0.0025078	0.0011923	0	0
3975253768039	397525	3768039	0.001009	0.0019312	0.0009223	0	0
3964253768089	396425	3768089	0.0009657	0.0018405	0.0008748	0	0
3964753768089	396475	3768089	0.0011966	0.0022742	0.0010776	0	0
3974753768089	397475	3768089	0.0015045	0.0028774	0.0013729	0	0
3975253768089	397525	3768089	0.0011112	0.0021366	0.0010254	0	0
3964253768139	396425	3768139	0.0010624	0.0020296	0.0009672	0	0
3964753768139	396475	3768139	0.0012979	0.002467	0.0011691	0	0
3974253768139	397425	3768139	0.0024063	0.0046348	0.0022285	0	0
3974753768139	397475	3768139	0.0016473	0.0031782	0.0015309	0	0
3975253768139	397525	3768139	0.0012097	0.0023359	0.0011262	0	0
3964253768189	396425	3768189	0.0011054	0.0021134	0.0010079	0	0
3964753768189	396475	3768189	0.0013826	0.0026291	0.0012465	0	0
3973753768189	397375	3768189	0.0042507	0.0087394	0.0044888	0	0
3974253768189	397425	3768189	0.0024985	0.0049018	0.0024033	0	0
3974753768189	397475	3768189	0.0017693	0.0034405	0.0016712	0	0
3975253768189	397525	3768189	0.0013019	0.0025254	0.0012235	0	0
3964253768239	396425	3768239	0.0011258	0.0021553	0.0010294	0	0
3964753768239	396475	3768239	0.0014353	0.0027321	0.0012968	0	0
3973753768239	397375	3768239	0.0043042	0.0091988	0.0048946	0	0
3974253768239	397425	3768239	0.0024842	0.0049393	0.0024551	0	0
3974753768239	397475	3768239	0.0017409	0.0034143	0.0016734	0	0
3975253768239	397525	3768239	0.0013089	0.0025556	0.0012466	0	0
3964253768289	396425	3768289	0.0011121	0.0021329	0.0010209	0	0
3964753768289	396475	3768289	0.0014447	0.0027551	0.0013104	0	0
3973253768289	397325	3768289	0.0063013	0.0148252	0.0085238	0	0
3973753768289	397375	3768289	0.0038229	0.0079561	0.0041332	0	0
3974253768289	397425	3768289	0.0026327	0.0052798	0.0026471	0	0
3974753768289	397475	3768289	0.0018892	0.0037298	0.0018406	0	0
3975253768289	397525	3768289	0.0014056	0.0027566	0.001351	0	0
3964253768339	396425	3768339	0.0010932	0.0021047	0.0010114	0	0
3964753768339	396475	3768339	0.0014097	0.0026963	0.0012866	0	0
3965253768339	396525	3768339	0.0019835	0.0037737	0.0017903	0	0
3972753768339	397275	3768339	0.0066006	0.0148156	0.0082151	0	0
3973253768339	397325	3768339	0.0048974	0.010981	0.0060836	0	0
3973753768339	397375	3768339	0.0033593	0.0069548	0.0035955	0	0
3974253768339	397425	3768339	0.0024705	0.0049743	0.0025038	0	0
3974753768339	397475	3768339	0.0018622	0.003696	0.0018337	0	0
3975253768339	397525	3768339	0.0014406	0.002836	0.0013954	0	0
3964253768389	396425	3768389	0.0010396	0.0020109	0.0009713	0	0
3964753768389	396475	3768389	0.0013327	0.0025605	0.0012278	0	0
3965253768389	396525	3768389	0.0018346	0.0035027	0.0016681	0	0
3972253768389	397225	3768389	0.0055892	0.0110501	0.0054609	0	0
3972753768389	397275	3768389	0.0051942	0.0120665	0.0068722	0	0
3973253768389	397325	3768389	0.004134	0.0095532	0.0054192	0	0
3973753768389	397375	3768389	0.0029607	0.006184	0.0032233	0	0
3974253768389	397425	3768389	0.002256	0.0045736	0.0023176	0	0
3974753768389	397475	3768389	0.0017599	0.0035158	0.0017559	0	0
3975253768389	397525	3768389	0.0013931	0.0027596	0.0013665	0	0
3964253768439	396425	3768439	0.0009944	0.0019352	0.0009408	0	0
3964753768439	396475	3768439	0.0012354	0.0023883	0.0011529	0	0
3965253768439	396525	3768439	0.0016437	0.0031551	0.0015114	0	0
3971753768439	397175	3768439	0.0045286	0.0087922	0.0042636	0	0
3972253768439	397225	3768439	0.0043332	0.0087292	0.004396	0	0
3972753768439	397275	3768439	0.0042863	0.0103793	0.006093	0	0
3973253768439	397325	3768439	0.0035799	0.0084736	0.0048937	0	0
3973753768439	397375	3768439	0.002678	0.0056064	0.0029284	0	0
3974253768439	397425	3768439	0.0021276	0.0043068	0.0021792	0	0
3974753768439	397475	3768439	0.0016637	0.0033437	0.00168	0	0
3975253768439	397525	3768439	0.0013417	0.0026724	0.0013307	0	0
3964253768489	396425	3768489	0.0009168	0.0018006	0.0008838	0	0

Garvey Reservoir Rehab - Unmitigated Reservoir Cover and Liner Work

Cancer Risk Summary & Maximum Annual GLC for Chronic Calculations

Cancer Risk Summary

Max Risk: 2.359732

XY	X	Y	Offroad Risk	Haul Risk	Total Risk
3964753768489	396475	3768489	0.280481235	0.029093117	0.309574352
3965253768489	396525	3768489	0.365211298	0.030224474	0.395435771
3970753768489	397075	3768489	1.08952668	0.059523096	1.149049776
3971253768489	397125	3768489	0.970496111	0.0756193	1.046115411
3971753768489	397175	3768489	0.87978899	0.109366021	0.989155011
3972253768489	397225	3768489	0.811878791	0.202315173	1.014193964
3972753768489	397275	3768489	0.745170011	0.758050158	1.503220169
3973253768489	397325	3768489	0.657586579	0.501414181	1.15900076
3973753768489	397375	3768489	0.556176819	0.192058797	0.748235616
3974253768489	397425	3768489	0.466530951	0.106006855	0.572537807
3974753768489	397475	3768489	0.39026088	0.066070234	0.456331114
3975253768489	397525	3768489	0.325003814	0.047864206	0.37286802
3964253768539	396425	3768539	0.207715302	0.032447862	0.240163164
3964753768539	396475	3768539	0.252798543	0.034216763	0.287015307
3965253768539	396525	3768539	0.318165739	0.035357295	0.353523034
3965753768539	396575	3768539	0.426513693	0.034027653	0.460541346
3970253768539	397025	3768539	0.934053073	0.056305115	0.990358188
3970753768539	397075	3768539	0.852356593	0.065883675	0.918240269
3971253768539	397125	3768539	0.777528225	0.082782779	0.860311004
3971753768539	397175	3768539	0.718718773	0.118198693	0.836917467
3972253768539	397225	3768539	0.661591308	0.207306507	0.868897816
3972753768539	397275	3768539	0.626780198	0.690510158	1.317290356
3973253768539	397325	3768539	0.560251631	0.483555786	1.043807417
3973753768539	397375	3768539	0.485263073	0.193442271	0.678705344
3974253768539	397425	3768539	0.418924731	0.103604783	0.522529513
3974753768539	397475	3768539	0.357782524	0.066831058	0.424613582
3975253768539	397525	3768539	0.30460973	0.047590762	0.352200491
3964253768589	396425	3768589	0.189994374	0.037866752	0.227861126
3964753768589	396475	3768589	0.226277223	0.041090745	0.267367968
3965253768589	396525	3768589	0.281542489	0.040943959	0.322486447
3965753768589	396575	3768589	0.355800183	0.039502781	0.395302964
3966253768589	396625	3768589	0.453725829	0.039052491	0.49277832
3968253768589	396825	3768589	0.856931997	0.048115321	0.905047318
3968753768589	396875	3768589	0.875854343	0.051001444	0.926855787
3969253768589	396925	3768589	0.835386553	0.055397098	0.890783651
3969753768589	396975	3768589	0.803599013	0.05946754	0.863066553
3970253768589	397025	3768589	0.752879115	0.0654193	0.818298415
3970753768589	397075	3768589	0.691756933	0.074314949	0.766071882
3971253768589	397125	3768589	0.649426943	0.093355885	0.742782828
3971753768589	397175	3768589	0.604844293	0.13232787	0.737172163
3972253768589	397225	3768589	0.556737481	0.231440002	0.788177483
3972753768589	397275	3768589	0.509922194	0.737547721	1.247469915
3973253768589	397325	3768589	0.479396144	0.480224966	0.959621111
3973753768589	397375	3768589	0.424000725	0.193397722	0.617398447
3974253768589	397425	3768589	0.37609415	0.10057921	0.47667336
3974753768589	397475	3768589	0.32717638	0.066348557	0.393524937
3975253768589	397525	3768589	0.283484782	0.047991258	0.33147604
3964253768639	396425	3768639	0.172934227	0.045642347	0.218576575
3964753768639	396475	3768639	0.201297723	0.051683472	0.252981195
3965253768639	396525	3768639	0.246090622	0.048567537	0.294658158
3965753768639	396575	3768639	0.298943038	0.048861494	0.347804532
3966253768639	396625	3768639	0.364500458	0.049733745	0.414234203
3966753768639	396675	3768639	0.441911877	0.050771606	0.492683483
3967253768639	396725	3768639	0.522737328	0.052338381	0.57507571
3967753768639	396775	3768639	0.589285919	0.055177283	0.644463202
3968253768639	396825	3768639	0.639024658	0.057903579	0.696928237
3968753768639	396875	3768639	0.655514132	0.062087602	0.717601734
3969253768639	396925	3768639	0.648766163	0.066797416	0.715563579
3969753768639	396975	3768639	0.634949846	0.070948838	0.705898685
3970253768639	397025	3768639	0.606356078	0.076546916	0.682902994
3970753768639	397075	3768639	0.567199837	0.084949461	0.652149297
3971253768639	397125	3768639	0.523618369	0.10214592	0.625764289
3971753768639	397175	3768639	0.505537016	0.149436123	0.654973139
3972253768639	397225	3768639	0.474240055	0.294505531	0.768745586
3972753768639	397275	3768639	0.443203403	1.025874147	1.46907755
3973253768639	397325	3768639	0.4127174	0.432577334	0.845294734
3973753768639	397375	3768639	0.371488711	0.190587891	0.562076602
3974253768639	397425	3768639	0.333754148	0.111093705	0.444847853
3974753768639	397475	3768639	0.298752813	0.065947019	0.364699832
3975253768639	397525	3768639	0.262850414	0.048459133	0.311309548
3964253768689	396425	3768689	0.156975381	0.058831773	0.215807154
3964753768689	396475	3768689	0.179361818	0.069788393	0.249150211
3965253768689	396525	3768689	0.210378447	0.072434951	0.282813399
3965753768689	396575	3768689	0.250756131	0.071192564	0.321948695
3966253768689	396625	3768689	0.295068462	0.072029506	0.367097968

Max GLC for Chronic Calcs

Max GLC: 0.014825

XY	X	Y	2025	2026	2027	2034	2035
3964753768489	396475	3768489	0.0011227	0.0021894	0.0010667	0	0
3965253768489	396525	3768489	0.0014543	0.0028134	0.001359	0	0
3970753768489	397075	3768489	0.0043087	0.0082434	0.0039347	0	0
3971253768489	397125	3768489	0.0038601	0.0074532	0.0035931	0	0
3971753768489	397175	3768489	0.0035391	0.0069559	0.0034167	0	0
3972253768489	397225	3768489	0.003365	0.0069141	0.0035491	0	0
3972753768489	397275	3768489	0.0036476	0.0091413	0.0054938	0	0
3973253768489	397325	3768489	0.0030552	0.0072487	0.0041935	0	0
3973753768489	397375	3768489	0.0023574	0.0049976	0.0026402	0	0
3974253768489	397425	3768489	0.0019236	0.003923	0.0019994	0	0
3974753768489	397475	3768489	0.0015871	0.0031713	0.0015842	0	0
3975253768489	397525	3768489	0.0013147	0.002606	0.0012913	0	0
3964253768539	396425	3768539	0.0008421	0.0016746	0.0008326	0	0
3964753768539	396475	3768539	0.0010197	0.0020123	0.0009927	0	0
3965253768539	396525	3768539	0.0012758	0.002495	0.0012192	0	0
3965753768539	396575	3768539	0.0016972	0.0032794	0.0015822	0	0
3970253768539	397025	3768539	0.003699	0.0070928	0.0033938	0	0
3970753768539	397075	3768539	0.0033897	0.0065433	0.0031536	0	0
3971253768539	397125	3768539	0.0031142	0.0060796	0.0029654	0	0
3971753768539	397175	3768539	0.0029194	0.0058233	0.0029039	0	0
3972253768539	397225	3768539	0.0027836	0.0058415	0.003058	0	0
3972753768539	397275	3768539	0.0031197	0.0079473	0.0048276	0	0
3973253768539	397325	3768539	0.002658	0.006451	0.003793	0	0
3973753768539	397375	3768539	0.0020821	0.0044868	0.0024047	0	0
3974253768539	397425	3768539	0.0017355	0.0035638	0.0018283	0	0
3974753768539	397475	3768539	0.0014611	0.0029379	0.0014768	0	0
3975253768539	397525	3768539	0.0012349	0.0024558	0.001221	0	0
3964253768589	396425	3768589	0.0007782	0.0015717	0.0007935	0	0
3964753768589	396475	3768589	0.0009229	0.0018523	0.0009294	0	0
3965253768589	396525	3768589	0.0011384	0.002255	0.0011166	0	0
3965753768589	396575	3768589	0.0014267	0.00279	0.0013633	0	0
3966253768589	396625	3768589	0.0018083	0.0035026	0.0016943	0	0
3968253768589	396825	3768589	0.0033901	0.0064899	0.0030998	0	0
3968753768589	396875	3768589	0.0034668	0.0066421	0.0031753	0	0
3969253768589	396925	3768589	0.0033132	0.0063682	0.003055	0	0
3969753768589	396975	3768589	0.0031932	0.0061561	0.0029629	0	0
3970253768589	397025	3768589	0.0030011	0.0058149	0.0028138	0	0
3970753768589	397075	3768589	0.0027713	0.0054122	0.0026409	0	0
3971253768589	397125	3768589	0.0026248	0.0051962	0.0025714	0	0
3971753768589	397175	3768589	0.0024889	0.0050611	0.0025722	0	0
3972253768589	397225	3768589	0.0023981	0.0051941	0.002796	0	0
3972753768589	397275	3768589	0.0027098	0.0073241	0.0046143	0	0
3973253768589	397325	3768589	0.0023393	0.0058445	0.0035052	0	0
3973753768589	397375	3768589	0.0018431	0.0040394	0.0021963	0	0
3974253768589	397425	3768589	0.0015655	0.0032364	0.0016709	0	0
3974753768589	397475	3768589	0.0013412	0.0027122	0.0013709	0	0
3975253768589	397525	3768589	0.0011528	0.0023036	0.0011508	0	0
3964253768639	396425	3768639	0.0007193	0.0014852	0.0007659	0	0
3964753768639	396475	3768639	0.0008358	0.0017217	0.0008859	0	0
3965253768639	396525	3768639	0.0010075	0.0020335	0.0010259	0	0
3965753768639	396575	3768639	0.001214	0.0024207	0.0012067	0	0
3966253768639	396625	3768639	0.0014706	0.0029035	0.0014329	0	0
3966753768639	396675	3768639	0.0017736	0.0034736	0.0016999	0	0
3967253768639	396725	3768639	0.0020905	0.0040712	0.0019807	0	0
3967753768639	396775	3768639	0.0023529	0.0045708	0.0022179	0	0
3968253768639	396825	3768639	0.0025496	0.0049472	0.0023976	0	0
3968753768639	396875	3768639	0.002618	0.005088	0.00247	0	0
3969253768639	396925	3768639	0.0025963	0.0050617	0.0024654	0	0
3969753768639	396975	3768639	0.0025464	0.0049811	0.0024347	0	0
3970253768639	397025	3768639	0.0024403	0.0047998	0.0023594	0	0
3970753768639	397075	3768639	0.0022958	0.004555	0.0022592	0	0
3971253768639	397125	3768639	0.0021426	0.0043209	0.0021783	0	0
3971753768639	397175	3768639	0.0021182	0.0044198	0.0023016	0	0
3972253768639	397225	3768639	0.0021378	0.0048999	0.0027621	0	0
3972753768639	397275	3768639	0.0027311	0.0082452	0.0055141	0	0
3973253768639	397325	3768639	0.0020327	0.0051251	0.0030925	0	0
3973753768639	397375	3768639	0.0016354	0.0036424	0.0020069	0	0
3974253768639	397425	3768639	0.0014106	0.0029787	0.0015681	0	0
3974753768639	397475	3768639	0.0012299	0.0025027	0.0012728	0	0
3975253768639	397525	3768639	0.0010728	0.0021553	0.0010825	0	0
3964253768689	396425	3768689	0.0006699	0.0014331	0.0007632	0	0
3964753768689	396475	3768689	0.0007679	0.00165	0.0008821	0	0
3965253768689	396525	3768689	0.0008915	0.0018894	0.0009979	0	0
3965753768689	396575	3768689	0.0010478	0.002178	0.0011302	0	0
3966253768689	396625	3768689	0.0012215	0.0025055	0.001284	0	0

Garvey Reservoir Rehab - Unmitigated Reservoir Cover and Liner Work

Cancer Risk Summary & Maximum Annual GLC for Chronic Calculations

Cancer Risk Summary

Max Risk: 2.359732

XY	X	Y	Offroad Risk	Haul Risk	Total Risk
3966753768689	396675	3768689	0.347480358	0.071548511	0.419028869
3967253768689	396725	3768689	0.397249133	0.072741056	0.469990188
3967753768689	396775	3768689	0.443834147	0.073786	0.517620147
3968253768689	396825	3768689	0.479696499	0.077779736	0.557476235
3968753768689	396875	3768689	0.503404497	0.081923198	0.585327696
3969253768689	396925	3768689	0.509091213	0.085460703	0.594551916
3969753768689	396975	3768689	0.503794958	0.089108396	0.592903355
3970253768689	397025	3768689	0.491590546	0.094196883	0.585787429
3970753768689	397075	3768689	0.475791888	0.103325752	0.57911764
3971253768689	397125	3768689	0.442132137	0.120661951	0.562794089
3971753768689	397175	3768689	0.428556105	0.168258887	0.596814992
3972253768689	397225	3768689	0.410064267	0.381569647	0.791633914
3972753768689	397275	3768689	0.384894543	1.048070283	1.432964826
3973253768689	397325	3768689	0.359084062	0.35077481	0.709858872
3973753768689	397375	3768689	0.330720566	0.177580173	0.508300738
3974253768689	397425	3768689	0.299864126	0.110926405	0.41079053
3974753768689	397475	3768689	0.269898738	0.075701213	0.345599951
3975253768689	397525	3768689	0.241425112	0.054942776	0.296367887
0	0	0	0	0	0
0	0	0	0	0	0
0	0	0	0	0	0
0	0	0	0	0	0
0	0	0	0	0	0
0	0	0	0	0	0
0	0	0	0	0	0
0	0	0	0	0	0
0	0	0	0	0	0
0	0	0	0	0	0
0	0	0	0	0	0
0	0	0	0	0	0
0	0	0	0	0	0
0	0	0	0	0	0
0	0	0	0	0	0
0	0	0	0	0	0
0	0	0	0	0	0
0	0	0	0	0	0
0	0	0	0	0	0
0	0	0	0	0	0
0	0	0	0	0	0
0	0	0	0	0	0
0	0	0	0	0	0
0	0	0	0	0	0
0	0	0	0	0	0
0	0	0	0	0	0
0	0	0	0	0	0
0	0	0	0	0	0
0	0	0			
0	0	0			
0	0	0			
0	0	0			
0	0	0			
0	0	0			
0	0	0			
0	0	0			
0	0	0			
0	0	0			
0	0	0			
0	0	0			
0	0	0			
0	0	0			
0	0	0			
0	0	0			
0	0	0			
0	0	0			
0	0	0			
0	0	0			
0	0	0			
0	0	0			
0	0	0			
0	0	0			
0	0	0			
0	0	0			
0	0	0			
0	0	0			
0	0	0			

Max GLC for Chronic Calcs

Max GLC: 0.014825

XY	X	Y	2025	2026	2027	2034	2035
3966753768689	396675	3768689	0.0014255	0.0028858	0.0014602	0	0
3967253768689	396725	3768689	0.0016208	0.0032549	0.001634	0	0
3967753768689	396775	3768689	0.0018036	0.0036	0.0017964	0	0
3968253768689	396825	3768689	0.0019474	0.0038813	0.0019339	0	0
3968753768689	396875	3768689	0.002044	0.0040746	0.0020306	0	0
3969253768689	396925	3768689	0.0020696	0.0041333	0.0020637	0	0
3969753768689	396975	3768689	0.0020525	0.0041125	0.00206	0	0
3970253768689	397025	3768689	0.0020099	0.0040483	0.0020384	0	0
3970753768689	397075	3768689	0.0019571	0.0039775	0.0020204	0	0
3971253768689	397125	3768689	0.0018427	0.0038165	0.0019738	0	0
3971753768689	397175	3768689	0.0018363	0.0039499	0.0021136	0	0
3972253768689	397225	3768689	0.0019725	0.0048567	0.0028842	0	0
3972753768689	397275	3768689	0.0025253	0.007928	0.0054027	0	0
3973253768689	397325	3768689	0.0017435	0.0043341	0.0025906	0	0
3973753768689	397375	3768689	0.0014637	0.0032813	0.0018176	0	0
3974253768689	397425	3768689	0.0012782	0.0027305	0.0014523	0	0
3974753768689	397475	3768689	0.0011269	0.0023398	0.0012129	0	0
3975253768689	397525	3768689	0.0009955	0.0020305	0.001035	0	0
0	0	0	0	0	0		
0	0	0	0	0	0		
0	0	0	0	0	0		
0	0	0	0	0	0		
0	0	0	0	0	0		
0	0	0	0	0	0		
0	0	0	0	0	0		
0	0	0	0	0	0		
0	0	0	0	0	0		
0	0	0	0	0	0		
0	0	0	0	0	0		
0	0	0	0	0	0		
0	0	0	0	0	0		
0	0	0	0	0	0		
0	0	0	0	0	0		
0	0	0	0	0	0		
0	0	0	0	0	0		
0	0	0	0	0	0		
0	0	0	0	0	0		
0	0	0	0	0	0		
0	0	0	0	0	0		
0	0	0	0	0	0		
0	0	0	0	0	0		
0	0	0	0	0	0		
0	0	0	0	0	0		
0	0	0	0	0	0		
0	0	0	0	0	0		
0	0	0	0	0	0		

Garvey Reservoir Rehab - Unmitigated Reservoir Cover and Liner Work

Construction Modeling Assumptions

AERMOD Sources

Volume Sources		
Offroad Construction Exhaust		
Release Height	3.66	m
Emissions rate	1	g/s
Init Vert Dimension	3.4	m
Line Volume		
Onroad Hauling Exhaust		
Plume Height	7.315	m
Plume Width	20	m
Release Height	3.66	m
Emissions rate	1	g/s

Meteorology:

SCAQMD	Pico	Rivera	2010 - 2012, 2015 - 2016

SCAQMD Met Data

https://www.aqmd.gov/home/air-quality/meteorological-data/data-for-aermod

AERMOD Sources

Garvey Reservoir Rehab - Unmitigated Reservoir Cover and Liner Work

Health Risk Assessment Risk Factors

Residential Risk	Abbreviation	UOM	3rd Trimester	0<2	2<16	16<30
Daily Breathing Rate (95th %'ile)	DBR	L/kg-day	361	1090	572	261
Fraction Of Time At Home [a]	FAH	unitless	1	1	1	0.73
Exposure Frequency	EF	days/year	0.96	0.96	0.96	0.96
Age Sensitivity Factor	ASF	unitless	10	10	3	1
Inhalation Absorption Factor	A	unitless	1	1	1	1
Conversion Factor	CF_1	m^3/L	0.001	0.001	0.001	0.001
Conversion Factor	CF_2	$\mu g/m^3$	0.001	0.001	0.001	0.001
Cancer Potency Factor (diesel exhaust)	CPF	$mg/kg\text{-}day^{-1}$	1.1	1.1	1.1	1.1
Averaging Time (for residential exposure)	AT	years	70.00	70.00	70.00	70.00

[a] assume school or daycare will have cancer risk of >1 per million

Garvey Reservoir Rehab - Unmitigated Reservoir Cover and Liner Work

Health Risk Assessment Exposure Duration Assumptions for Offroad Equipment

Residential Receptors

Start Date	*9/30/2025*	*12/30/2025*	
End Date	*12/29/2025*	*12/30/2027*	

	9/30/2025	*11/7/2027*	*Days*	*90*	*730*
Phase	Start Date	End Date	Duration (days)	3rd Tri	0<2
Demolition - 2025	9/30/2025	12/31/2025	93	91	2
Demolition - 2026	1/1/2026	2/16/2026	47	0	47
Site Preparation - 2025			1	0	0
Site Preparation - 2026			1	0	0
Grading - 2025			1	0	0
Grading - 2026			1	0	0
Infrastructure - 2025	5/8/2026	12/31/2026	238	0	238
Infrastructure - 2026	1/1/2027	11/7/2027	311	0	311
Paving - 2025			1	0	0
Architectural Coating - 2026			1	0	0

Intake Factor for Inhalation, IF (m^3/kg-day)

Phase	Year	Year	Equation	3rd Trimester	0<2
Demolition - 2025		2025		0.012329142	0.000818165
Demolition - 2026		2026	$\frac{DBR \cdot FAH \cdot EF \cdot ED \cdot ASF \cdot A \cdot CF_1}{AT}$	0	0.019226872
Site Preparation - 2025		1900		0	0
Site Preparation - 2026		1900		0	0
Grading - 2025		1900		0	0
Grading - 2026		1900		0	0
Infrastructure - 2025		2026		0	0.097361606
Infrastructure - 2026		2027		0	0.12722462
Paving - 2025		1900		0	0
Architectural Coating - 2026		1900		0	0

Risk Calculation Part 1, R1

Equation	3rd Trimester	0<2
	1.35621E-05	8.99981E-07
	0	2.11496E-05
	0	0
	0	0
$IF \cdot CPF \cdot CF_2$	0	0
	0	0
	0	0.000107098
	0	0.000139947
	0	0
	0	0

Exposure Durations

Garvey Reservoir Rehab - Unmitigated Reservoir Cover and Liner Work

Offroad DPM Emissions, Ground Level Concentrations and Health Risk Calculations

Residential Receptors

Phase	Year	Emissions (lbs/day)	Work Hours Per Day	Emissions (g/s)
Demolition - 2025	2025	0.310	10	0.003905914
Demolition - 2026	2026	0.290	10	0.003653919
Site Preparation - 2025	1900	0.000	10	0
Site Preparation - 2026	1900	0.000	10	0
Grading - 2025	1900	0.000	10	0
Grading - 2026	1900	0.000	10	0
Infrastructure - 2025	2026	0.290	10	0.003653919
Infrastructure - 2026	2027	0.270	10	0.003401925
Paving - 2025	1900	0.000	10	0
Architectural Coating - 2026	1900	0.000	10	0

		AERMOD Column Identifier:	*4*	*4*	*4*	*4*	*4*	*4*	*4*	*4*	*4*	*4*						
Garvey Reservoir Rehab - Unmitigated Reservoir Cover and Liner Work			Demolition - 2025	Demolition - 2026	Site Preparation - 202	Site Preparation - 202	Grading - 2025	Grading - 2026	Infrastructure - 202	Infrastructure - 2026	Paving - 2025	Architectural Coating -	Child Risk				
Unique Identifier	X (UTM)	Y (UTM)	2025	2026	1900	1900	1900	1900	2026	2027	1900	1900	3rd Trimester	0<2	2<16	Total	per million
396166.283767377.2	396166.28	3767377	0.000214122	0.000200308	0	0	0	0	0.000200308	0.000186494	0	0	2.90394E-09	5.19809E-08	#VALUE!	5.48848E-08	0.0548848
396266.283767377.2	396266.28	3767377	0.00023041	0.000215545	0	0	0	0	0.000215545	0.00020068	0	0	3.12483E-09	5.59349E-08	#VALUE!	5.90597E-08	0.0590597
396366.283767377.2	396366.28	3767377	0.000255564	0.000239076	0	0	0	0	0.000239076	0.000222588	0	0	3.46597E-09	6.20414E-08	#VALUE!	6.55074E-08	0.0655074
396466.283767377.2	396466.28	3767377	0.000275094	0.000257346	0	0	0	0	0.000257346	0.000239598	0	0	3.73083E-09	6.67824E-08	#VALUE!	7.05133E-08	0.0705133
396566.283767377.2	396566.28	3767377	0.000298099	0.000278867	0	0	0	0	0.000278867	0.000259635	0	0	4.04284E-09	7.23674E-08	#VALUE!	7.64102E-08	0.0764102
396666.283767377.2	396666.28	3767377	0.000304349	0.000284713	0	0	0	0	0.000284713	0.000265078	0	0	4.1276E-09	7.38845E-08	#VALUE!	7.80121E-08	0.0780121
396766.283767377.2	396766.28	3767377	0.000303021	0.000283471	0	0	0	0	0.000283471	0.000263921	0	0	4.10959E-09	7.35621E-08	#VALUE!	7.76717E-08	0.0776717
396866.283767377.2	396866.28	3767377	0.000304271	0.00028464	0	0	0	0	0.00028464	0.00026501	0	0	4.12654E-09	7.38656E-08	#VALUE!	7.79921E-08	0.0779921
396966.283767377.2	396966.28	3767377	0.000313293	0.000293081	0	0	0	0	0.000293081	0.000272868	0	0	4.2489E-09	7.60559E-08	#VALUE!	8.03048E-08	0.0803048
397066.283767377.2	397066.28	3767377	0.000314035	0.000293775	0	0	0	0	0.000293775	0.000273515	0	0	4.25897E-09	7.62361E-08	#VALUE!	8.04951E-08	0.0804951
397166.283767377.2	397166.28	3767377	0.000300209	0.00028084	0	0	0	0	0.00028084	0.000261472	0	0	4.07145E-09	7.28794E-08	#VALUE!	7.69509E-08	0.0769509
397266.283767377.2	397266.28	3767377	0.000278023	0.000260086	0	0	0	0	0.000260086	0.000242149	0	0	3.77056E-09	6.74936E-08	#VALUE!	7.12642E-08	0.0712642
397366.283767377.2	397366.28	3767377	0.000264196	0.000247151	0	0	0	0	0.000247151	0.000230106	0	0	3.58304E-09	6.41369E-08	#VALUE!	6.772E-08	0.06772
397466.283767377.2	397466.28	3767377	0.000247947	0.000231951	0	0	0	0	0.000231951	0.000215954	0	0	3.36268E-09	6.01924E-08	#VALUE!	6.35551E-08	0.0635551
397566.283767377.2	397566.28	3767377	0.000225137	0.000210612	0	0	0	0	0.000210612	0.000196087	0	0	3.05332E-09	5.46548E-08	#VALUE!	5.77082E-08	0.0577082
397666.283767377.2	397666.28	3767377	0.000203615	0.000190479	0	0	0	0	0.000190479	0.000177342	0	0	2.76144E-09	4.94302E-08	#VALUE!	5.21916E-08	0.0521916
397766.283767377.2	397766.28	3767377	0.000179086	0.000167532	0	0	0	0	0.000167532	0.000155978	0	0	2.42878E-09	4.34754E-08	#VALUE!	4.59042E-08	0.0459042
397866.283767377.2	397866.28	3767377	0.000160846	0.000150468	0	0	0	0	0.000150468	0.000140091	0	0	2.1814E-09	3.90473E-08	#VALUE!	4.12287E-08	0.0412287
396166.283767477.2	396166.28	3767477	0.000244315	0.000228553	0	0	0	0	0.000228553	0.00021279	0	0	3.31341E-09	5.93105E-08	#VALUE!	6.2624E-08	0.062624
396266.283767477.2	396266.28	3767477	0.000263102	0.000246128	0	0	0	0	0.000246128	0.000229154	0	0	3.56821E-09	6.38714E-08	#VALUE!	6.74396E-08	0.0674396
396366.283767477.2	396366.28	3767477	0.000300794	0.000281388	0	0	0	0	0.000281388	0.000261982	0	0	4.07939E-09	7.30217E-08	#VALUE!	7.71011E-08	0.0771011
396466.283767477.2	396466.28	3767477	0.000334424	0.000312849	0	0	0	0	0.000312849	0.000291273	0	0	4.53548E-09	8.11858E-08	#VALUE!	8.57212E-08	0.0857212
396566.283767477.2	396566.28	3767477	0.000362508	0.00033912	0	0	0	0	0.00033912	0.000315733	0	0	4.91635E-09	8.80034E-08	#VALUE!	9.29197E-08	0.0929197
396666.283767477.2	396666.28	3767477	0.000378092	0.000353699	0	0	0	0	0.000353699	0.000329306	0	0	5.12771E-09	9.17867E-08	#VALUE!	9.69145E-08	0.0969145
396766.283767477.2	396766.28	3767477	0.000386881	0.000361921	0	0	0	0	0.000361921	0.000336961	0	0	5.2469E-09	9.39202E-08	#VALUE!	9.91671E-08	0.0991671
396866.283767477.2	396866.28	3767477	0.00039231	0.000367	0	0	0	0	0.000367	0.000341689	0	0	5.32053E-09	9.52382E-08	#VALUE!	1.00559E-07	0.1005588
396966.283767477.2	396966.28	3767477	0.000403832	0.000377779	0	0	0	0	0.000377779	0.000351725	0	0	5.4768E-09	9.80354E-08	#VALUE!	1.03512E-07	0.1035122
397066.283767477.2	397066.28	3767477	0.000404614	0.00037851	0	0	0	0	0.00037851	0.000352405	0	0	5.48739E-09	9.82251E-08	#VALUE!	1.03712E-07	0.1037125
397166.283767477.2	397166.28	3767477	0.000385631	0.000360751	0	0	0	0	0.000360751	0.000335872	0	0	5.22995E-09	9.36168E-08	#VALUE!	9.88467E-08	0.0988467
397266.283767477.2	397266.28	3767477	0.000352821	0.000330059	0	0	0	0	0.000330059	0.000307296	0	0	4.78498E-09	8.56518E-08	#VALUE!	9.04368E-08	0.0904368
397366.283767477.2	397366.28	3767477	0.000323488	0.000302618	0	0	0	0	0.000302618	0.000281747	0	0	4.38716E-09	7.85308E-08	#VALUE!	8.29179E-08	0.0829179
397466.283767477.2	397466.28	3767477	0.000298412	0.000279159	0	0	0	0	0.000279159	0.000259907	0	0	4.04708E-09	7.24433E-08	#VALUE!	7.64903E-08	0.0764903
397566.283767477.2	397566.28	3767477	0.000266696	0.00024949	0	0	0	0	0.00024949	0.000232283	0	0	3.61694E-09	6.47438E-08	#VALUE!	6.83607E-08	0.0683607
397666.283767477.2	397666.28	3767477	0.000235253	0.000220076	0	0	0	0	0.000220076	0.000204898	0	0	3.19052E-09	5.71107E-08	#VALUE!	6.03012E-08	0.0603012
397766.283767477.2	397766.28	3767477	0.00020717	0.000193804	0	0	0	0	0.000193804	0.000180438	0	0	2.80965E-09	5.02931E-08	#VALUE!	5.31027E-08	0.0531027
397866.283767477.2	397866.28	3767477	0.00018307	0.000171259	0	0	0	0	0.000171259	0.000159448	0	0	2.48281E-09	4.44426E-08	#VALUE!	4.69254E-08	0.0469254
396166.283767577.2	396166.28	3767577	0.000270836	0.000253363	0	0	0	0	0.000253363	0.000235889	0	0	3.67309E-09	6.57489E-08	#VALUE!	6.9422E-08	0.069422
396266.283767577.2	396266.28	3767577	0.000303372	0.0002838	0	0	0	0	0.0002838	0.000264228	0	0	4.11435E-09	7.36475E-08	#VALUE!	7.77618E-08	0.0777618
396366.283767577.2	396366.28	3767577	0.000348447	0.000325966	0	0	0	0	0.000325966	0.000303486	0	0	4.72565E-09	8.45898E-08	#VALUE!	8.93155E-08	0.0893155
396466.283767577.2	396466.28	3767577	0.000400825	0.000374965	0	0	0	0	0.000374965	0.000349106	0	0	5.43601E-09	9.73053E-08	#VALUE!	1.02741E-07	0.1027413
396566.283767577.2	396566.28	3767577	0.000455234	0.000425864	0	0	0	0	0.000425864	0.000396494	0	0	6.17391E-09	1.10514E-07	#VALUE!	1.16688E-07	0.1166878
396666.283767577.2	396666.28	3767577	0.000501324	0.000468981	0	0	0	0	0.000468981	0.000436637	0	0	6.79899E-09	1.21703E-07	#VALUE!	1.28502E-07	0.1285018
396766.283767577.2	396766.28	3767577	0.000504917	0.000472342	0	0	0	0	0.000472342	0.000439767	0	0	6.84772E-09	1.22575E-07	#VALUE!	1.29423E-07	0.1294228
396866.283767577.2	396866.28	3767577	0.000533392	0.000498979	0	0	0	0	0.000498979	0.000464567	0	0	7.23389E-09	1.29488E-07	#VALUE!	1.36721E-07	0.1367215

Garvey Reservoir Rehab - Unmitigated Reservoir Cover and Liner Work			Demolition - 2025	Demolition - 2026	Site Preparation - 202	Site Preparation - 202	Grading - 2025	Grading - 2026	Infrastructure - 2025	Infrastructure - 2026	Paving - 2025	Architectural Coating - 2	Child Risk				
Unique Identifier	X (UTM)	Y (UTM)	2025	2026	1900	1900	1900	1900	2026	2027	1900	1900	3rd Trimester	0<2	2<16	Total	per million
396966.283767577.2	396966.28	3767577	0.000543391	0.000508333	0	0	0	0	0.000508333	0.000473276	0	0	7.3695E-09	1.31915E-07	#VALUE!	1.39284E-07	0.1392845
397066.283767577.2	397066.28	3767577	0.000537727	0.000503035	0	0	0	0	0.000503035	0.000468343	0	0	7.29269E-09	1.3054E-07	#VALUE!	1.37833E-07	0.1378328
397166.283767577.2	397166.28	3767577	0.000514409	0.000481221	0	0	0	0	0.000481221	0.000448034	0	0	6.97644E-09	1.24879E-07	#VALUE!	1.31856E-07	0.1318557
397266.283767577.2	397266.28	3767577	0.000464335	0.000434378	0	0	0	0	0.000434378	0.000404421	0	0	6.29734E-09	1.12723E-07	#VALUE!	1.19021E-07	0.1190206
397366.283767577.2	397366.28	3767577	0.000410668	0.000384173	0	0	0	0	0.000384173	0.000357678	0	0	5.5695E-09	9.96948E-08	#VALUE!	1.05264E-07	0.1052643
397466.283767577.2	397466.28	3767577	0.000369109	0.000345295	0	0	0	0	0.000345295	0.000321482	0	0	5.00588E-09	8.96059E-08	#VALUE!	9.46117E-08	0.0946117
397566.283767577.2	397566.28	3767577	0.000319699	0.000299073	0	0	0	0	0.000299073	0.000278448	0	0	4.33578E-09	7.7611E-08	#VALUE!	8.19468E-08	0.0819468
397666.283767577.2	397666.28	3767577	0.000275718	0.00025793	0	0	0	0	0.00025793	0.000240142	0	0	3.73931E-09	6.69342E-08	#VALUE!	7.06735E-08	0.0706735
397766.283767577.2	397766.28	3767577	0.000237362	0.000222049	0	0	0	0	0.000222049	0.000206735	0	0	3.21912E-09	5.76227E-08	#VALUE!	6.08419E-08	0.0608419
397866.283767577.2	397866.28	3767577	0.000205803	0.000192525	0	0	0	0	0.000192525	0.000179247	0	0	2.79111E-09	4.99612E-08	#VALUE!	5.27523E-08	0.0527523
396166.283767677.2	396166.28	3767677	0.000304818	0.000285152	0	0	0	0	0.000285152	0.000265486	0	0	4.13395E-09	7.39983E-08	#VALUE!	7.81323E-08	0.0781323
396266.283767677.2	396266.28	3767677	0.000350439	0.00032783	0	0	0	0	0.00032783	0.000305221	0	0	4.75267E-09	8.50734E-08	#VALUE!	8.98261E-08	0.0898261
396366.283767677.2	396366.28	3767677	0.000416722	0.000389837	0	0	0	0	0.000389837	0.000362951	0	0	5.65161E-09	1.01165E-07	#VALUE!	1.06816E-07	0.1068161
396466.283767677.2	396466.28	3767677	0.000500035	0.000467775	0	0	0	0	0.000467775	0.000435514	0	0	6.7815E-09	1.2139E-07	#VALUE!	1.28171E-07	0.1281714
396566.283767677.2	396566.28	3767677	0.000580497	0.000543046	0	0	0	0	0.000543046	0.000505594	0	0	7.87273E-09	1.40923E-07	#VALUE!	1.48796E-07	0.1487957
396666.283767677.2	396666.28	3767677	0.000631039	0.000590327	0	0	0	0	0.000590327	0.000549615	0	0	8.55819E-09	1.53193E-07	#VALUE!	1.61751E-07	0.161751
396766.283767677.2	396766.28	3767677	0.000708533	0.000662821	0	0	0	0	0.000662821	0.000617109	0	0	9.60916E-09	1.72005E-07	#VALUE!	1.81614E-07	0.1816145
396866.283767677.2	396866.28	3767677	0.000788057	0.000737215	0	0	0	0	0.000737215	0.000686372	0	0	1.06877E-08	1.91311E-07	#VALUE!	2.01999E-07	0.2019986
396966.283767677.2	396966.28	3767677	0.000830397	0.000776823	0	0	0	0	0.000776823	0.000723249	0	0	1.12619E-08	2.01589E-07	#VALUE!	2.12851E-07	0.2128514
397066.283767677.2	397066.28	3767677	0.000792432	0.000741307	0	0	0	0	0.000741307	0.000690183	0	0	1.0747E-08	1.92373E-07	#VALUE!	2.0312E-07	0.2031199
397166.283767677.2	397166.28	3767677	0.000730796	0.000683648	0	0	0	0	0.000683648	0.0006365	0	0	9.9111E-09	1.7741E-07	#VALUE!	1.87321E-07	0.1873212
397266.283767677.2	397266.28	3767677	0.000660959	0.000618316	0	0	0	0	0.000618316	0.000575674	0	0	8.96396E-09	1.60456E-07	#VALUE!	1.6942E-07	0.1694201
397366.283767677.2	397366.28	3767677	0.000547726	0.000512389	0	0	0	0	0.000512389	0.000477052	0	0	7.4283E-09	1.32968E-07	#VALUE!	1.40396E-07	0.1403958
397466.283767677.2	397466.28	3767677	0.000472577	0.000442088	0	0	0	0	0.000442088	0.000411599	0	0	6.40911E-09	1.14724E-07	#VALUE!	1.21133E-07	0.1211331
397566.283767677.2	397566.28	3767677	0.000390006	0.000364844	0	0	0	0	0.000364844	0.000339682	0	0	5.28928E-09	9.46788E-08	#VALUE!	9.99681E-08	0.0999681
397666.283767677.2	397666.28	3767677	0.0003238	0.00030291	0	0	0	0	0.00030291	0.00028202	0	0	4.3914E-09	7.86066E-08	#VALUE!	8.2998E-08	0.082998
397766.283767677.2	397766.28	3767677	0.000271539	0.00025402	0	0	0	0	0.00025402	0.000236502	0	0	3.68263E-09	6.59196E-08	#VALUE!	6.96022E-08	0.0696022
397866.283767677.2	397866.28	3767677	0.000229277	0.000214485	0	0	0	0	0.000214485	0.000199693	0	0	3.10947E-09	5.56599E-08	#VALUE!	5.87694E-08	0.0587694
396166.283767777.2	396166.28	3767777	0.000336963	0.000315224	0	0	0	0	0.000315224	0.000293484	0	0	4.56991E-09	8.18021E-08	#VALUE!	8.6372E-08	0.086372
396266.283767777.2	396266.28	3767777	0.00041184	0.000385269	0	0	0	0	0.000385269	0.000358699	0	0	5.58539E-09	9.99793E-08	#VALUE!	1.05565E-07	0.1055647
396366.283767777.2	396366.28	3767777	0.000498512	0.00046635	0	0	0	0	0.00046635	0.000434188	0	0	6.76085E-09	1.2102E-07	#VALUE!	1.27781E-07	0.1277809
396466.283767777.2	396466.28	3767777	0.000613033	0.000573483	0	0	0	0	0.000573483	0.000533932	0	0	8.31399E-09	1.48822E-07	#VALUE!	1.57136E-07	0.1571356
396566.283767777.2	396566.28	3767777	0.000728297	0.00068131	0	0	0	0	0.00068131	0.000634323	0	0	9.8772E-09	1.76803E-07	#VALUE!	1.8668E-07	0.1866805
396666.283767777.2	396666.28	3767777	0.000876175	0.000819647	0	0	0	0	0.000819647	0.00076312	0	0	1.18827E-08	2.12702E-07	#VALUE!	2.24585E-07	0.2245852
396766.283767777.2	396766.28	3767777	0.001078071	0.001008518	0	0	0	0	0.001008518	0.000938965	0	0	1.46209E-08	2.61715E-07	#VALUE!	2.76336E-07	0.2763363
396866.283767777.2	396866.28	3767777	0.001278132	0.001195672	0	0	0	0	0.001195672	0.001113212	0	0	1.73341E-08	3.10283E-07	#VALUE!	3.27617E-07	0.3276169
396966.283767777.2	396966.28	3767777	0.001387888	0.001298347	0	0	0	0	0.001298347	0.001208806	0	0	1.88226E-08	3.36928E-07	#VALUE!	3.5575E-07	0.3557501
397066.283767777.2	397066.28	3767777	0.001328401	0.001242698	0	0	0	0	0.001242698	0.001156995	0	0	1.80159E-08	3.22486E-07	#VALUE!	3.40502E-07	0.3405021
397166.283767777.2	397166.28	3767777	0.001167595	0.001092266	0	0	0	0	0.001092266	0.001016937	0	0	1.5835E-08	2.83448E-07	#VALUE!	2.99283E-07	0.2992834
397266.283767777.2	397266.28	3767777	0.000996321	0.000932042	0	0	0	0	0.000932042	0.000867763	0	0	1.35122E-08	2.41869E-07	#VALUE!	2.55382E-07	0.2553816
397366.283767777.2	397366.28	3767777	0.000775285	0.000725266	0	0	0	0	0.000725266	0.000675248	0	0	1.05145E-08	1.8821E-07	#VALUE!	1.98725E-07	0.1987247
397466.283767777.2	397466.28	3767777	0.000617916	0.00057805	0	0	0	0	0.00057805	0.000538185	0	0	8.38021E-09	1.50007E-07	#VALUE!	1.58387E-07	0.158387
397566.283767777.2	397566.28	3767777	0.000482263	0.000451149	0	0	0	0	0.000451149	0.000420036	0	0	6.54048E-09	1.17076E-07	#VALUE!	1.23616E-07	0.123616
397666.283767777.2	397666.28	3767777	0.000380788	0.000356221	0	0	0	0	0.000356221	0.000331654	0	0	5.16426E-09	9.2441E-08	#VALUE!	9.76053E-08	0.0976053
397766.283767777.2	397766.28	3767777	0.000310208	0.000290194	0	0	0	0	0.000290194	0.000270181	0	0	4.20705E-09	7.53068E-08	#VALUE!	7.95139E-08	0.0795139
397866.283767777.2	397866.28	3767777	0.000256853	0.000240282	0	0	0	0	0.000240282	0.000223711	0	0	3.48345E-09	6.23543E-08	#VALUE!	6.58378E-08	0.0658378
396166.283767877.2	396166.28	3767877	0.000367	0.000343322	0	0	0	0	0.000343322	0.000319645	0	0	4.97727E-09	8.90938E-08	#VALUE!	9.40711E-08	0.0940711
396266.283767877.2	396266.28	3767877	0.00046371	0.000433793	0	0	0	0	0.000433793	0.000403877	0	0	6.28886E-09	1.12572E-07	#VALUE!	1.1886E-07	0.1188604
396366.283767877.2	396366.28	3767877	0.000591902	0.000553715	0	0	0	0	0.000553715	0.000515528	0	0	8.02741E-09	1.43692E-07	#VALUE!	1.51719E-07	0.1517192
396466.283767877.2	396466.28	3767877	0.000751537	0.000703051	0	0	0	0	0.000703051	0.000654564	0	0	1.01924E-08	1.82445E-07	#VALUE!	1.92637E-07	0.1926375
396566.283767877.2	396566.28	3767877	0.000961753	0.000899705	0	0	0	0	0.000899705	0.000837656	0	0	1.30434E-08	2.33478E-07	#VALUE!	2.46521E-07	0.2465211
397466.283767877.2	397466.28	3767877	0.000809579	0.000757348	0	0	0	0	0.000757348	0.000705117	0	0	1.09796E-08	1.96536E-07	#VALUE!	2.07515E-07	0.2075151
397566.283767877.2	397566.28	3767877	0.00059737	0.00055883	0	0	0	0	0.00055883	0.00052029	0	0	8.10157E-09	1.45019E-07	#VALUE!	1.53121E-07	0.1531208
397666.283767877.2	397666.28	3767877	0.000451367	0.000422247	0	0	0	0	0.000422247	0.000393126	0	0	6.12147E-09	1.09575E-07	#VALUE!	1.15697E-07	0.1156966
397766.283767877.2	397766.28	3767877	0.000353251	0.00033046	0	0	0	0	0.00033046	0.00030767	0	0	4.79081E-09	8.57561E-08	#VALUE!	9.05469E-08	0.0905469
397866.283767877.2	397866.28	3767877	0.000282124	0.000263923	0	0	0	0	0.000263923	0.000245721	0	0	3.82618E-09	6.84892E-08	#VALUE!	7.23154E-08	0.0723154
396166.283767977.2	396166.28	3767977	0.00038774	0.000362725	0	0	0	0	0.000362725	0.000337709	0	0	5.25855E-09	9.41288E-08	#VALUE!	9.93874E-08	0.0993874
396266.283767977.2	396266.28	3767977	0.000507886	0.000475119	0	0	0	0	0.000475119	0.000442352	0	0	6.88798E-09	1.23296E-07	#VALUE!	1.30184E-07	0.1301837
396366.283767977.2	396366.28	3767977	0.000678028	0.000634284	0	0	0	0	0.000634284	0.00059054	0	0	9.19545E-09	1.646E-07	#VALUE!	1.73795E-07	0.1737952
396466.283767977.2	396466.28	3767977	0.000909922	0.000851217	0	0	0	0	0.000851217	0.000792512	0	0	1.23404E-08	2.20895E-07	#VALUE!	2.33235E-07	0.2332354
397466.283767977.2	397466.28	3767977	0.001136269	0.001062962	0	0	0	0	0.001062962	0.000989654	0	0	1.54102E-08	2.75844E-07	#VALUE!	2.91254E-07	0.291254
397566.283767977.2	397566.28	3767977	0.000739389	0.000691687	0	0	0	0	0.000691687	0.000643984	0	0	1.00276E-08	1.79496E-07	#VALUE!	1.89524E-07	0.1895238
397666.283767977.2	397666.28	3767977	0.00052472	0.000490868	0	0	0	0	0.000490868	0.000457015	0	0	7.11629E-09	1.27383E-07	#VALUE!	1.34499E-07	0.1344988
397766.283767977.2	397766.28	3767977	0.000389615	0.000364478	0	0	0	0	0.000364478	0.000339342	0	0	5.28398E-09	9.4584E-08	#VALUE!	9.98679E-08	0.0998679
397866.283767977.2	397866.28	3767977	0.000300677	0.000281279	0	0	0	0	0.000281279	0.00026188	0	0	4.0778E-09	7.29932E-08	#VALUE!	7.7071E-08	0.077071
396166.283768077.2	396166.28	3768077	0.000417737	0.000390787	0	0	0	0	0.000390787	0.000363836	0	0	5.66538E-09	1.01411E-07	#VALUE!	1.07076E-07	0.1070765
396266.283768077.2	396266.28	3768077	0.000542141	0.000507164	0	0	0	0	0.000507164	0.000472187	0	0	7.35254E-09	1.31612E-07	#VALUE!	1.38964E-07	0.1389641
396366.283768077.2	396366.28	3768077	0.000754154	0.000705499	0	0	0	0	0.000705499	0.000656844	0	0	1.02279E-08	1.8308E-07	#VALUE!	1.93308E-07	0.1933083
396466.283768077.2	396466.28	3768077	0.001116701	0.001044656	0	0	0	0	0.001044656	0.00097261	0	0	1.51448E-08	2.71093E-07	#VALUE!	2.86238E-07	0.286238
397466.283768077.2	397466.28	3768077	0.001521705	0.00142353	0	0	0	0	0.00142353	0.001325356	0	0	2.06374E-08	3.69413E-07	#VALUE!	3.90051E-07	0.3900506
397566.283768077.2	397566.28	3768077	0.000875979	0.000819465	0	0	0	0	0.000819465	0.00076295	0	0	1.18801E-08	2.12655E-07	#VALUE!	2.24535E-07	0.2245352

Garvey Reservoir Rehab - Unmitigated Reservoir Cover and Liner Work			Demolition - 2025	Demolition - 2026	ite Preparation - 202	te Preparation - 202	Grading - 2025	Grading - 2026	nfrastructure - 2025	nfrastructure - 2026	Paving - 2025	itectural Coating - 2	Child Risk				
Unique Identifier	X (UTM)	Y (UTM)	2025	2026	1900	1900	1900	1900	2026	2027	1900	1900	3rd Trimester	0<2	2<16	Total	per million
397666.283768077.2	397666.28	3768077	0.000589363	0.00055134	0	0	0	0	0.00055134	0.000513316	0	0	7.99298E-09	1.43075E-07	#VALUE!	1.51068E-07	0.1510684
397766.283768077.2	397766.28	3768077	0.000432814	0.000404891	0	0	0	0	0.000404891	0.000376967	0	0	5.86985E-09	1.05071E-07	#VALUE!	1.10941E-07	0.110941
397866.283768077.2	397866.28	3768077	0.000328839	0.000307623	0	0	0	0	0.000307623	0.000286408	0	0	4.45973E-09	7.98298E-08	#VALUE!	8.42895E-08	0.0842895
396166.283768177.2	396166.28	3768177	0.000431057	0.000403247	0	0	0	0	0.000403247	0.000375436	0	0	5.84601E-09	1.04644E-07	#VALUE!	1.1049E-07	0.1104905
396266.283768177.2	396266.28	3768177	0.000575927	0.00053877	0	0	0	0	0.00053877	0.000501614	0	0	7.81075E-09	1.39814E-07	#VALUE!	1.47624E-07	0.1476243
396366.283768177.2	396366.28	3768177	0.000831921	0.000778248	0	0	0	0	0.000778248	0.000724576	0	0	1.12826E-08	2.01959E-07	#VALUE!	2.13242E-07	0.2132418
396466.283768177.2	396466.28	3768177	0.001292545	0.001209155	0	0	0	0	0.001209155	0.001125765	0	0	1.75296E-08	3.13782E-07	#VALUE!	3.31311E-07	0.3313113
397466.283768177.2	397466.28	3768177	0.001808477	0.001691801	0	0	0	0	0.001691801	0.001575125	0	0	2.45267E-08	4.39031E-07	#VALUE!	4.63557E-07	0.4635574
397566.283768177.2	397566.28	3768177	0.000999836	0.00093533	0	0	0	0	0.00093533	0.000870825	0	0	1.35598E-08	2.42723E-07	#VALUE!	2.56283E-07	0.2562827
397666.283768177.2	397666.28	3768177	0.000647483	0.00060571	0	0	0	0	0.00060571	0.000563937	0	0	8.78121E-09	1.57185E-07	#VALUE!	1.65966E-07	0.165966
397766.283768177.2	397766.28	3768177	0.00047035	0.000440005	0	0	0	0	0.000440005	0.00040966	0	0	6.37892E-09	1.14183E-07	#VALUE!	1.20562E-07	0.1205624
397866.283768177.2	397866.28	3768177	0.000348954	0.000326441	0	0	0	0	0.000326441	0.000303928	0	0	4.73254E-09	8.47131E-08	#VALUE!	8.94456E-08	0.0894456
396166.283768277.2	396166.28	3768277	0.000431682	0.000403831	0	0	0	0	0.000403831	0.000375981	0	0	5.85449E-09	1.04796E-07	#VALUE!	1.10651E-07	0.1106507
396266.283768277.2	396266.28	3768277	0.000569951	0.00053318	0	0	0	0	0.00053318	0.000496409	0	0	7.72971E-09	1.38363E-07	#VALUE!	1.46093E-07	0.1460925
396366.283768277.2	396366.28	3768277	0.000835944	0.000782012	0	0	0	0	0.000782012	0.00072808	0	0	1.13371E-08	2.02936E-07	#VALUE!	2.14273E-07	0.214273
396466.283768277.2	396466.28	3768277	0.001360195	0.001272441	0	0	0	0	0.001272441	0.001184686	0	0	1.8447E-08	3.30205E-07	#VALUE!	3.48652E-07	0.3486517
397366.283768277.2	397366.28	3768277	0.003952082	0.003697109	0	0	0	0	0.003697109	0.003442136	0	0	5.35984E-08	9.59418E-07	#VALUE!	1.01302E-06	1.0130163
397466.283768277.2	397466.28	3768277	0.001878432	0.001757243	0	0	0	0	0.001757243	0.001636054	0	0	2.54754E-08	4.56013E-07	#VALUE!	4.81489E-07	0.4814886
397566.283768277.2	397566.28	3768277	0.001103186	0.001032013	0	0	0	0	0.001032013	0.00096084	0	0	1.49615E-08	2.67812E-07	#VALUE!	2.82774E-07	0.2827739
397666.283768277.2	397666.28	3768277	0.000704002	0.000658582	0	0	0	0	0.000658582	0.000613163	0	0	9.54771E-09	1.70905E-07	#VALUE!	1.80453E-07	0.1804531
397766.283768277.2	397766.28	3768277	0.000496129	0.000464121	0	0	0	0	0.000464121	0.000432113	0	0	6.72853E-09	1.20442E-07	#VALUE!	1.2717E-07	0.1271702
397866.283768277.2	397866.28	3768277	0.000379186	0.000354722	0	0	0	0	0.000354722	0.000330259	0	0	5.14254E-09	9.20522E-08	#VALUE!	9.71948E-08	0.0971948
396166.283768377.2	396166.28	3768377	0.000416722	0.000389837	0	0	0	0	0.000389837	0.000362951	0	0	5.65161E-09	1.01165E-07	#VALUE!	1.06816E-07	0.1068161
396266.283768377.2	396266.28	3768377	0.000548781	0.000513376	0	0	0	0	0.000513376	0.00047797	0	0	7.4426E-09	1.33224E-07	#VALUE!	1.40666E-07	0.1406661
396366.283768377.2	396366.28	3768377	0.00079126	0.000740211	0	0	0	0	0.000740211	0.000689162	0	0	1.07311E-08	1.92088E-07	#VALUE!	2.0282E-07	0.2028195
396466.283768377.2	396466.28	3768377	0.001275242	0.001192968	0	0	0	0	0.001192968	0.001110694	0	0	1.72949E-08	3.09581E-07	#VALUE!	3.26876E-07	0.326876
397266.283768377.2	397266.28	3768377	0.004906023	0.004589506	0	0	0	0	0.004589506	0.004272988	0	0	6.65358E-08	1.191E-06	#VALUE!	1.25754E-06	1.2575351
397366.283768377.2	397366.28	3768377	0.002979314	0.0027871	0	0	0	0	0.0027871	0.002594886	0	0	4.04056E-08	7.23266E-07	#VALUE!	7.63672E-07	0.7636719
397466.283768377.2	397466.28	3768377	0.001785432	0.001670243	0	0	0	0	0.001670243	0.001555054	0	0	2.42141E-08	4.33436E-07	#VALUE!	4.5765E-07	0.4576505
397566.283768377.2	397566.28	3768377	0.001147284	0.001073266	0	0	0	0	0.001073266	0.000999247	0	0	1.55595E-08	2.78518E-07	#VALUE!	2.94077E-07	0.2940773
397666.283768377.2	397666.28	3768377	0.000771184	0.00072143	0	0	0	0	0.00072143	0.000671676	0	0	1.04588E-08	1.87215E-07	#VALUE!	1.97673E-07	0.1976734
397766.283768377.2	397766.28	3768377	0.000544484	0.000509356	0	0	0	0	0.000509356	0.000474228	0	0	7.38433E-09	1.3218E-07	#VALUE!	1.39565E-07	0.1395648
397866.283768377.2	397866.28	3768377	0.000417152	0.000390239	0	0	0	0	0.000390239	0.000363326	0	0	5.65743E-09	1.01269E-07	#VALUE!	1.06926E-07	0.1069263
396166.283768477.2	396166.28	3768477	0.000390357	0.000365173	0	0	0	0	0.000365173	0.000339988	0	0	5.29404E-09	9.47641E-08	#VALUE!	1.00058E-07	0.1000582
396266.283768477.2	396266.28	3768477	0.000512964	0.000479869	0	0	0	0	0.000479869	0.000446775	0	0	6.95684E-09	1.24528E-07	#VALUE!	1.31485E-07	0.1314853
396366.283768477.2	396366.28	3768477	0.000723961	0.000677254	0	0	0	0	0.000677254	0.000630547	0	0	9.8184E-09	1.75751E-07	#VALUE!	1.85569E-07	0.1855691
396466.283768477.2	396466.28	3768477	0.001078384	0.001008811	0	0	0	0	0.001008811	0.000939237	0	0	1.46251E-08	2.61791E-07	#VALUE!	2.76416E-07	0.2764164
397166.283768477.2	397166.28	3768477	0.003679215	0.003441846	0	0	0	0	0.003441846	0.003204477	0	0	4.98977E-08	8.93176E-07	#VALUE!	9.43074E-07	0.9430737
397266.283768477.2	397266.28	3768477	0.003114576	0.002913635	0	0	0	0	0.002913635	0.002712695	0	0	4.22401E-08	7.56103E-07	#VALUE!	7.98343E-07	0.7983428
397366.283768477.2	397366.28	3768477	0.002309684	0.002160672	0	0	0	0	0.002160672	0.00201166	0	0	3.13241E-08	5.60705E-07	#VALUE!	5.92029E-07	0.5920292
397466.283768477.2	397466.28	3768477	0.001602675	0.001499276	0	0	0	0	0.001499276	0.001395878	0	0	2.17356E-08	3.8907E-07	#VALUE!	4.10805E-07	0.4108051
397566.283768477.2	397566.28	3768477	0.001070103	0.001001064	0	0	0	0	0.001001064	0.000932025	0	0	1.45128E-08	2.59781E-07	#VALUE!	2.74294E-07	0.2742939
397666.283768477.2	397666.28	3768477	0.000756263	0.000707472	0	0	0	0	0.000707472	0.000658681	0	0	1.02565E-08	1.83592E-07	#VALUE!	1.93849E-07	0.1938489
397766.283768477.2	397766.28	3768477	0.000575615	0.000538478	0	0	0	0	0.000538478	0.000501342	0	0	7.80652E-09	1.39738E-07	#VALUE!	1.47544E-07	0.1475442
397866.283768477.2	397866.28	3768477	0.000431447	0.000403612	0	0	0	0	0.000403612	0.000375777	0	0	5.85131E-09	1.04739E-07	#VALUE!	1.10591E-07	0.1105906
396166.283768577.2	396166.28	3768577	0.000348954	0.000326441	0	0	0	0	0.000326441	0.000303928	0	0	4.73254E-09	8.47131E-08	#VALUE!	8.94456E-08	0.0894456
396266.283768577.2	396266.28	3768577	0.000461679	0.000431893	0	0	0	0	0.000431893	0.000402108	0	0	6.26132E-09	1.12078E-07	#VALUE!	1.1834E-07	0.1183398
396366.283768577.2	396366.28	3768577	0.000624204	0.000583933	0	0	0	0	0.000583933	0.000543662	0	0	8.46549E-09	1.51533E-07	#VALUE!	1.59999E-07	0.159999
396466.283768577.2	396466.28	3768577	0.000876682	0.000820122	0	0	0	0	0.000820122	0.000763562	0	0	1.18896E-08	2.12826E-07	#VALUE!	2.24715E-07	0.2247154
396566.283768577.2	396566.28	3768577	0.00138699	0.001297507	0	0	0	0	0.001297507	0.001208024	0	0	1.88104E-08	3.36709E-07	#VALUE!	3.5552E-07	0.3555199
396866.283768577.2	396866.28	3768577	0.00366777	0.00343114	0	0	0	0	0.00343114	0.00319451	0	0	4.97425E-08	8.90398E-07	#VALUE!	9.4014E-07	0.9401403
396966.283768577.2	396966.28	3768577	0.00336018	0.003143394	0	0	0	0	0.003143394	0.002926608	0	0	4.55709E-08	8.15726E-07	#VALUE!	8.61297E-07	0.8612972
397066.283768577.2	397066.28	3768577	0.002864129	0.002679346	0	0	0	0	0.002679346	0.002494564	0	0	3.88435E-08	6.95304E-07	#VALUE!	7.34147E-07	0.734147
397166.283768577.2	397166.28	3768577	0.002490723	0.002330031	0	0	0	0	0.002330031	0.00216934	0	0	3.37793E-08	6.04655E-07	#VALUE!	6.38434E-07	0.638434
397266.283768577.2	397266.28	3768577	0.002103257	0.001967563	0	0	0	0	0.001967563	0.001831869	0	0	2.85245E-08	5.10592E-07	#VALUE!	5.39117E-07	0.5391167
397366.283768577.2	397366.28	3768577	0.001743912	0.001631402	0	0	0	0	0.001631402	0.001518891	0	0	2.3651E-08	4.23357E-07	#VALUE!	4.47008E-07	0.4470079
397466.283768577.2	397466.28	3768577	0.001337307	0.001251029	0	0	0	0	0.001251029	0.001164751	0	0	1.81366E-08	3.24648E-07	#VALUE!	3.42785E-07	0.3427848
397566.283768577.2	397566.28	3768577	0.000989563	0.00092572	0	0	0	0	0.00092572	0.000861878	0	0	1.34205E-08	2.40229E-07	#VALUE!	2.5365E-07	0.2536495
397666.283768577.2	397666.28	3768577	0.000733999	0.000686645	0	0	0	0	0.000686645	0.00063929	0	0	9.95454E-09	1.78188E-07	#VALUE!	1.88142E-07	0.1881422
397766.283768577.2	397766.28	3768577	0.000551359	0.000515787	0	0	0	0	0.000515787	0.000480216	0	0	7.47756E-09	1.33849E-07	#VALUE!	1.41327E-07	0.1413269
397866.283768577.2	397866.28	3768577	0.000430744	0.000402954	0	0	0	0	0.000402954	0.000375164	0	0	5.84178E-09	1.04569E-07	#VALUE!	1.1041E-07	0.1104104
396166.283768677.2	396166.28	3768677	0.000314582	0.000294287	0	0	0	0	0.000294287	0.000273991	0	0	4.26638E-09	7.63688E-08	#VALUE!	8.06352E-08	0.0806352
396266.283768677.2	396266.28	3768677	0.000397895	0.000372225	0	0	0	0	0.000372225	0.000346554	0	0	5.39628E-09	9.65942E-08	#VALUE!	1.0199E-07	0.1019904
396366.283768677.2	396366.28	3768677	0.000527962	0.0004939	0	0	0	0	0.0004939	0.000459838	0	0	7.16026E-09	1.2817E-07	#VALUE!	1.3533E-07	0.1353298
396466.283768677.2	396466.28	3768677	0.000699979	0.000654819	0	0	0	0	0.000654819	0.000609659	0	0	9.49315E-09	1.69929E-07	#VALUE!	1.79422E-07	0.1794219
396566.283768677.2	396566.28	3768677	0.000989212	0.000925392	0	0	0	0	0.000925392	0.000861572	0	0	1.34157E-08	2.40144E-07	#VALUE!	2.53559E-07	0.2535594
396666.283768677.2	396666.28	3768677	0.001388631	0.001299041	0	0	0	0	0.001299041	0.001209452	0	0	1.88327E-08	3.37108E-07	#VALUE!	3.5594E-07	0.3559403
396766.283768677.2	396766.28	3768677	0.001797541	0.00168157	0	0	0	0	0.00168157	0.0015656	0	0	2.43783E-08	4.36376E-07	#VALUE!	4.60754E-07	0.4607541
396866.283768677.2	396866.28	3768677	0.002060135	0.001927223	0	0	0	0	0.001927223	0.001794311	0	0	2.79397E-08	5.00124E-07	#VALUE!	5.28064E-07	0.5280636
396966.283768677.2	396966.28	3768677	0.002071423	0.001937783	0	0	0	0	0.001937783	0.001804143	0	0	2.80928E-08	5.02864E-07	#VALUE!	5.30957E-07	0.530957
397066.283768677.2	397066.28	3768677	0.001947996	0.001822319	0	0	0	0	0.001822319	0.001696642	0	0	2.64188E-08	4.72901E-07	#VALUE!	4.9932E-07	0.4993197

Garvey Reservoir Rehab - Unmitigated Reservoir Cover and Liner Work			Demolition - 2025	Demolition - 2026	Site Preparation - 202	Site Preparation - 202	Grading - 2025	Grading - 2026	Infrastructure - 202	Infrastructure - 202	Paving - 2025	Architectural Coating -	Child Risk				
Unique Identifier	X (UTM)	Y (UTM)	2025	2026	1900	1900	1900	1900	2026	2027	1900	1900	3rd Trimester	0<2	2<16	Total	per million
397166.283768677.2	397166.28	3768677	0.001750826	0.001637869	0	0	0	0	0.001637869	0.001524913	0	0	2.37448E-08	4.25035E-07	#VALUE!	4.4878E-07	0.44878
397366.283768677.2	397366.28	3768677	0.001345041	0.001258264	0	0	0	0	0.001258264	0.001171487	0	0	1.82415E-08	3.26526E-07	#VALUE!	3.44767E-07	0.3447672
397466.283768677.2	397466.28	3768677	0.001095921	0.001025217	0	0	0	0	0.001025217	0.000954512	0	0	1.48629E-08	2.66049E-07	#VALUE!	2.80912E-07	0.2809117
397566.283768677.2	397566.28	3768677	0.000868988	0.000812924	0	0	0	0	0.000812924	0.00075686	0	0	1.17853E-08	2.10958E-07	#VALUE!	2.22743E-07	0.222743
397666.283768677.2	397666.28	3768677	0.000680957	0.000637024	0	0	0	0	0.000637024	0.000593092	0	0	9.23518E-09	1.65311E-07	#VALUE!	1.74546E-07	0.1745461
397766.283768677.2	397766.28	3768677	0.000529759	0.000495581	0	0	0	0	0.000495581	0.000461403	0	0	7.18462E-09	1.28606E-07	#VALUE!	1.3579E-07	0.1357904
397866.283768677.2	397866.28	3768677	0.000423635	0.000396304	0	0	0	0	0.000396304	0.000368973	0	0	5.74537E-09	1.02843E-07	#VALUE!	1.08588E-07	0.1085882
396166.283768777.2	396166.28	3768777	0.000286421	0.000267942	0	0	0	0	0.000267942	0.000249463	0	0	3.88445E-09	6.95322E-08	#VALUE!	7.34167E-08	0.0734167
396266.283768777.2	396266.28	3768777	0.000349111	0.000326587	0	0	0	0	0.000326587	0.000304064	0	0	4.73466E-09	8.4751E-08	#VALUE!	8.94857E-08	0.0894857
396366.283768777.2	396366.28	3768777	0.000447305	0.000418447	0	0	0	0	0.000418447	0.000389588	0	0	6.06638E-09	1.08589E-07	#VALUE!	1.14655E-07	0.1146554
396466.283768777.2	396466.28	3768777	0.000570263	0.000533472	0	0	0	0	0.000533472	0.000496681	0	0	7.73394E-09	1.38439E-07	#VALUE!	1.46173E-07	0.1461726
396566.283768777.2	396566.28	3768777	0.000729429	0.000682369	0	0	0	0	0.000682369	0.000635309	0	0	9.89256E-09	1.77078E-07	#VALUE!	1.86971E-07	0.1869708
396666.283768777.2	396666.28	3768777	0.000943356	0.000882495	0	0	0	0	0.000882495	0.000821633	0	0	1.27939E-08	2.29012E-07	#VALUE!	2.41806E-07	0.2418056
396766.283768777.2	396766.28	3768777	0.001173649	0.00109793	0	0	0	0	0.00109793	0.00102221	0	0	1.59171E-08	2.84918E-07	#VALUE!	3.00835E-07	0.3008353
396866.283768777.2	396866.28	3768777	0.001342384	0.001255779	0	0	0	0	0.001255779	0.001169174	0	0	1.82055E-08	3.25881E-07	#VALUE!	3.44086E-07	0.3440863
396966.283768777.2	396966.28	3768777	0.001401247	0.001310844	0	0	0	0	0.001310844	0.001220441	0	0	1.90038E-08	3.4017E-07	#VALUE!	3.59174E-07	0.3591742
397066.283768777.2	397066.28	3768777	0.001376561	0.001287751	0	0	0	0	0.001287751	0.00119894	0	0	1.8669E-08	3.34178E-07	#VALUE!	3.52847E-07	0.3528467
397166.283768777.2	397166.28	3768777	0.00128571	0.001202761	0	0	0	0	0.001202761	0.001119812	0	0	1.74369E-08	3.12122E-07	#VALUE!	3.29559E-07	0.3295592
397266.283768777.2	397266.28	3768777	0.001190405	0.001113605	0	0	0	0	0.001113605	0.001036805	0	0	1.61443E-08	2.88986E-07	#VALUE!	3.0513E-07	0.3051303
397366.283768777.2	397366.28	3768777	0.001046394	0.000978885	0	0	0	0	0.000978885	0.000911376	0	0	1.41913E-08	2.54025E-07	#VALUE!	2.68217E-07	0.2682168
397466.283768777.2	397466.28	3768777	0.00088258	0.00082564	0	0	0	0	0.00082564	0.000768699	0	0	1.19696E-08	2.14258E-07	#VALUE!	2.26227E-07	0.2262272
397566.283768777.2	397566.28	3768777	0.000729976	0.000682881	0	0	0	0	0.000682881	0.000635786	0	0	9.89998E-09	1.77211E-07	#VALUE!	1.87111E-07	0.187111
397666.283768777.2	397666.28	3768777	0.000598855	0.000560219	0	0	0	0	0.000560219	0.000521583	0	0	8.1217E-09	1.4538E-07	#VALUE!	1.53501E-07	0.1535013
397766.283768777.2	397766.28	3768777	0.00048945	0.000457873	0	0	0	0	0.000457873	0.000426295	0	0	6.63795E-09	1.1882E-07	#VALUE!	1.25458E-07	0.1254582
397866.283768777.2	397866.28	3768777	0.000403676	0.000377633	0	0	0	0	0.000377633	0.000351589	0	0	5.47468E-09	9.79975E-08	#VALUE!	1.03472E-07	0.1034722
396166.283768877.2	396166.28	3768877	0.000255212	0.000238747	0	0	0	0	0.000238747	0.000222282	0	0	3.46121E-09	6.1956E-08	#VALUE!	6.54173E-08	0.0654173
396266.283768877.2	396266.28	3768877	0.000309075	0.000289135	0	0	0	0	0.000289135	0.000269194	0	0	4.19169E-09	7.50319E-08	#VALUE!	7.92236E-08	0.0792236
396366.283768877.2	396366.28	3768877	0.000372859	0.000348803	0	0	0	0	0.000348803	0.000324748	0	0	5.05673E-09	9.05161E-08	#VALUE!	9.55729E-08	0.0955729
396466.283768877.2	396466.28	3768877	0.000470545	0.000440188	0	0	0	0	0.000440188	0.00040983	0	0	6.38156E-09	1.14231E-07	#VALUE!	1.20612E-07	0.1206124
396566.283768877.2	396566.28	3768877	0.000578075	0.00054078	0	0	0	0	0.00054078	0.000503485	0	0	7.83989E-09	1.40335E-07	#VALUE!	1.48175E-07	0.148175
396666.283768877.2	396666.28	3768877	0.000701854	0.000656573	0	0	0	0	0.000656573	0.000611292	0	0	9.51858E-09	1.70384E-07	#VALUE!	1.79902E-07	0.1799025
396766.283768877.2	396766.28	3768877	0.000843052	0.000788662	0	0	0	0	0.000788662	0.000734271	0	0	1.14335E-08	2.04662E-07	#VALUE!	2.16095E-07	0.2160952
396866.283768877.2	396866.28	3768877	0.000987103	0.000923419	0	0	0	0	0.000923419	0.000859734	0	0	1.33871E-08	2.39632E-07	#VALUE!	2.53019E-07	0.2530188
396966.283768877.2	396966.28	3768877	0.001040184	0.000973075	0	0	0	0	0.000973075	0.000905967	0	0	1.4107E-08	2.52518E-07	#VALUE!	2.66625E-07	0.2666249
397066.283768877.2	397066.28	3768877	0.001025107	0.000958971	0	0	0	0	0.000958971	0.000892835	0	0	1.39026E-08	2.48858E-07	#VALUE!	2.6276E-07	0.2627603
397166.283768877.2	397166.28	3768877	0.000983743	0.000920276	0	0	0	0	0.000920276	0.000856809	0	0	1.33416E-08	2.38816E-07	#VALUE!	2.52158E-07	0.2521578
397266.283768877.2	397266.28	3768877	0.00092617	0.000866417	0	0	0	0	0.000866417	0.000806664	0	0	1.25608E-08	2.2484E-07	#VALUE!	2.374E-07	0.2374004
397366.283768877.2	397366.28	3768877	0.000831022	0.000777408	0	0	0	0	0.000777408	0.000723794	0	0	1.12704E-08	2.01741E-07	#VALUE!	2.13012E-07	0.2130116
397466.283768877.2	397466.28	3768877	0.000728609	0.000681602	0	0	0	0	0.000681602	0.000634595	0	0	9.88144E-09	1.76879E-07	#VALUE!	1.86761E-07	0.1867606
397566.283768877.2	397566.28	3768877	0.000625337	0.000584993	0	0	0	0	0.000584993	0.000544648	0	0	8.48085E-09	1.51808E-07	#VALUE!	1.60289E-07	0.1602893
397666.283768877.2	397666.28	3768877	0.000525502	0.000491598	0	0	0	0	0.000491598	0.000457695	0	0	7.12688E-09	1.27572E-07	#VALUE!	1.34699E-07	0.1346991
397766.283768877.2	397766.28	3768877	0.00044297	0.000414391	0	0	0	0	0.000414391	0.000385812	0	0	6.00758E-09	1.07537E-07	#VALUE!	1.13544E-07	0.1135441
397866.283768877.2	397866.28	3768877	0.000376569	0.000352274	0	0	0	0	0.000352274	0.00032798	0	0	5.10705E-09	9.14169E-08	#VALUE!	9.6524E-08	0.096524
3964253767739	396425	3767739	0.000527259	0.000493243	0	0	0	0	0.000493243	0.000459226	0	0	7.15072E-09	1.27999E-07	#VALUE!	1.3515E-07	0.1351496
3964753767739	396475	3767739	0.000579638	0.000542242	0	0	0	0	0.000542242	0.000504846	0	0	7.86108E-09	1.40714E-07	#VALUE!	1.48575E-07	0.1485755
3965253767739	396525	3767739	0.000623696	0.000583458	0	0	0	0	0.000583458	0.000543219	0	0	8.4586E-09	1.5141E-07	#VALUE!	1.59869E-07	0.1598688
3965753767739	396575	3767739	0.000683769	0.000639655	0	0	0	0	0.000639655	0.000595541	0	0	9.27332E-09	1.65994E-07	#VALUE!	1.75267E-07	0.175267
3966253767739	396625	3767739	0.000717555	0.000671262	0	0	0	0	0.000671262	0.000624968	0	0	9.73153E-09	1.74196E-07	#VALUE!	1.83927E-07	0.1839272
3966753767739	396675	3767739	0.000776066	0.000725997	0	0	0	0	0.000725997	0.000675928	0	0	1.05251E-08	1.884E-07	#VALUE!	1.98925E-07	0.1989249
3967253767739	396725	3767739	0.000864847	0.000809051	0	0	0	0	0.000809051	0.000753254	0	0	1.17291E-08	2.09953E-07	#VALUE!	2.21682E-07	0.2216818
3967753767739	396775	3767739	0.000912304	0.000853446	0	0	0	0	0.000853446	0.000794588	0	0	1.23727E-08	2.21473E-07	#VALUE!	2.33846E-07	0.2338462
3968253767739	396825	3767739	0.000989602	0.000925757	0	0	0	0	0.000925757	0.000861912	0	0	1.3421E-08	2.40239E-07	#VALUE!	2.5366E-07	0.2536596
3968753767739	396875	3767739	0.001064908	0.000996205	0	0	0	0	0.000996205	0.000927501	0	0	1.44423E-08	2.5852E-07	#VALUE!	2.72962E-07	0.2729624
3969253767739	396925	3767739	0.001103499	0.001032305	0	0	0	0	0.001032305	0.000961112	0	0	1.49657E-08	2.67888E-07	#VALUE!	2.82854E-07	0.282854
3969753767739	396975	3767739	0.001118771	0.001046592	0	0	0	0	0.001046592	0.000974413	0	0	1.51728E-08	2.71596E-07	#VALUE!	2.86769E-07	0.2867687
3970253767739	397025	3767739	0.001103382	0.001032196	0	0	0	0	0.001032196	0.00096101	0	0	1.49641E-08	2.6786E-07	#VALUE!	2.82824E-07	0.282824
3970753767739	397075	3767739	0.001059362	0.000991016	0	0	0	0	0.000991016	0.00092267	0	0	1.43671E-08	2.57174E-07	#VALUE!	2.71541E-07	0.2715407
3971253767739	397125	3767739	0.00100382	0.000939057	0	0	0	0	0.000939057	0.000874295	0	0	1.36139E-08	2.4369E-07	#VALUE!	2.57304E-07	0.2573039
3971753767739	397175	3767739	0.000946872	0.000885783	0	0	0	0	0.000885783	0.000824695	0	0	1.28415E-08	2.29865E-07	#VALUE!	2.42707E-07	0.2427066
3972253767739	397225	3767739	0.000882229	0.000825311	0	0	0	0	0.000825311	0.000768393	0	0	1.19648E-08	2.14172E-07	#VALUE!	2.26137E-07	0.2261371
3972753767739	397275	3767739	0.000825945	0.000772658	0	0	0	0	0.000772658	0.000719371	0	0	1.12015E-08	2.00509E-07	#VALUE!	2.1171E-07	0.21171
3973253767739	397325	3767739	0.000740014	0.000692272	0	0	0	0	0.000692272	0.000644529	0	0	1.00361E-08	1.79648E-07	#VALUE!	1.89684E-07	0.189684
3973753767739	397375	3767739	0.000658889	0.00061638	0	0	0	0	0.00061638	0.000573871	0	0	8.93588E-09	1.59954E-07	#VALUE!	1.68889E-07	0.1688895
3974253767739	397425	3767739	0.000590926	0.000552801	0	0	0	0	0.000552801	0.000514677	0	0	8.01417E-09	1.43455E-07	#VALUE!	1.51469E-07	0.1514689
3974753767739	397475	3767739	0.000544641	0.000509503	0	0	0	0	0.000509503	0.000474364	0	0	7.38645E-09	1.32218E-07	#VALUE!	1.39605E-07	0.1396049
3975253767739	397525	3767739	0.000486755	0.000455351	0	0	0	0	0.000455351	0.000423948	0	0	6.6014E-09	1.18166E-07	#VALUE!	1.24767E-07	0.1247673
3964253767789	396425	3767789	0.000580536	0.000543082	0	0	0	0	0.000543082	0.000505628	0	0	7.87326E-09	1.40932E-07	#VALUE!	1.48806E-07	0.1488057
3964753767789	396475	3767789	0.000638539	0.000597343	0	0	0	0	0.000597343	0.000556147	0	0	8.6599E-09	1.55013E-07	#VALUE!	1.63673E-07	0.1636733
3965253767789	396525	3767789	0.000696581	0.00065164	0	0	0	0	0.00065164	0.000606699	0	0	9.44707E-09	1.69104E-07	#VALUE!	1.78551E-07	0.1785509
3965753767789	396575	3767789	0.000759896	0.00071087	0	0	0	0	0.00071087	0.000661845	0	0	1.03057E-08	1.84474E-07	#VALUE!	1.9478E-07	0.19478
3966253767789	396625	3767789	0.000838834	0.000784716	0	0	0	0	0.000784716	0.000730597	0	0	1.13763E-08	2.03638E-07	#VALUE!	2.15014E-07	0.2150139

Garvey Reservoir Rehab - Unmitigated Reservoir Cover and Liner Work			Demolition - 2025	Demolition - 2026	ite Preparation - 202	ite Preparation - 202	Grading - 2025	Grading - 2026	nfrastructure - 2025	nfrastructure - 2026	Paving - 2025	itectural Coating - 2	Child Risk				
Unique Identifier	X (UTM)	Y (UTM)	2025	2026	1900	1900	1900	1900	2026	2027	1900	1900	3rd Trimester	0<2	2<16	Total	per million
3966753767789	396675	3767789	0.000933006	0.000872812	0	0	0	0	0.000872812	0.000812618	0	0	1.26535E-08	2.26499E-07	#VALUE!	2.39152E-07	0.2391524
3967253767789	396725	3767789	0.001058385	0.000990103	0	0	0	0	0.000990103	0.00092182	0	0	1.43539E-08	2.56936E-07	#VALUE!	2.7129E-07	0.2712904
3967753767789	396775	3767789	0.001155291	0.001080756	0	0	0	0	0.001080756	0.001006221	0	0	1.56681E-08	2.80462E-07	#VALUE!	2.9613E-07	0.2961297
3968253767789	396825	3767789	0.001272664	0.001190557	0	0	0	0	0.001190557	0.001108449	0	0	1.72599E-08	3.08955E-07	#VALUE!	3.26215E-07	0.3262152
3968753767789	396875	3767789	0.001372538	0.001283987	0	0	0	0	0.001283987	0.001195436	0	0	1.86144E-08	3.33201E-07	#VALUE!	3.51815E-07	0.3518155
3969253767789	396925	3767789	0.001439017	0.001346177	0	0	0	0	0.001346177	0.001253337	0	0	1.9516E-08	3.4934E-07	#VALUE!	3.68856E-07	0.3688556
3969753767789	396975	3767789	0.001490926	0.001394738	0	0	0	0	0.001394738	0.001298549	0	0	2.022E-08	3.61941E-07	#VALUE!	3.82161E-07	0.3821613
3970253767789	397025	3767789	0.001479521	0.001384068	0	0	0	0	0.001384068	0.001288615	0	0	2.00653E-08	3.59173E-07	#VALUE!	3.79238E-07	0.3792379
3970753767789	397075	3767789	0.001414605	0.00132334	0	0	0	0	0.00132334	0.001232075	0	0	1.9185E-08	3.43413E-07	#VALUE!	3.62598E-07	0.3625982
3971253767789	397125	3767789	0.001325277	0.001239775	0	0	0	0	0.001239775	0.001154273	0	0	1.79735E-08	3.21728E-07	#VALUE!	3.39701E-07	0.3397012
3971753767789	397175	3767789	0.001227433	0.001148244	0	0	0	0	0.001148244	0.001069055	0	0	1.66465E-08	2.97975E-07	#VALUE!	3.14622E-07	0.3146216
3972253767789	397225	3767789	0.001118927	0.001046738	0	0	0	0	0.001046738	0.000974549	0	0	1.5175E-08	2.71634E-07	#VALUE!	2.86809E-07	0.2868087
3972753767789	397275	3767789	0.001030458	0.000963977	0	0	0	0	0.000963977	0.000897496	0	0	1.39751E-08	2.50157E-07	#VALUE!	2.64132E-07	0.2641319
3973253767789	397325	3767789	0.000912734	0.000853848	0	0	0	0	0.000853848	0.000794962	0	0	1.23785E-08	2.21578E-07	#VALUE!	2.33956E-07	0.2339563
3973753767789	397375	3767789	0.000789971	0.000739005	0	0	0	0	0.000739005	0.000688039	0	0	1.07136E-08	1.91775E-07	#VALUE!	2.02489E-07	0.2024891
3974253767789	397425	3767789	0.000689394	0.000644917	0	0	0	0	0.000644917	0.00060044	0	0	9.3496E-09	1.67359E-07	#VALUE!	1.76709E-07	0.1767087
3974753767789	397475	3767789	0.000624478	0.000584189	0	0	0	0	0.000584189	0.0005439	0	0	8.4692E-09	1.516E-07	#VALUE!	1.60069E-07	0.160069
3975253767789	397525	3767789	0.000547726	0.000512389	0	0	0	0	0.000512389	0.000477052	0	0	7.4283E-09	1.32968E-07	#VALUE!	1.40396E-07	0.1403958
3964253767839	396425	3767839	0.000639008	0.000597781	0	0	0	0	0.000597781	0.000556555	0	0	8.66626E-09	1.55127E-07	#VALUE!	1.63793E-07	0.1637934
3964753767839	396475	3767839	0.000716852	0.000670604	0	0	0	0	0.000670604	0.000624355	0	0	9.72199E-09	1.74025E-07	#VALUE!	1.83747E-07	0.183747
3965253767839	396525	3767839	0.000780363	0.000730017	0	0	0	0	0.000730017	0.000679671	0	0	1.05833E-08	1.89443E-07	#VALUE!	2.00026E-07	0.2000262
3965753767839	396575	3767839	0.000877424	0.000820816	0	0	0	0	0.000820816	0.000764208	0	0	1.18997E-08	2.13006E-07	#VALUE!	2.24906E-07	0.2249056
3966253767839	396625	3767839	0.000991438	0.000927474	0	0	0	0	0.000927474	0.000863511	0	0	1.34459E-08	2.40684E-07	#VALUE!	2.5413E-07	0.2541301
3966753767839	396675	3767839	0.001169235	0.001093801	0	0	0	0	0.001093801	0.001018366	0	0	1.58572E-08	2.83847E-07	#VALUE!	2.99704E-07	0.2997039
3967253767839	396725	3767839	0.001336252	0.001250042	0	0	0	0	0.001250042	0.001163833	0	0	1.81223E-08	3.24392E-07	#VALUE!	3.42514E-07	0.3425145
3967753767839	396775	3767839	0.00150655	0.001409353	0	0	0	0	0.001409353	0.001312156	0	0	2.04319E-08	3.65734E-07	#VALUE!	3.86166E-07	0.386166
3968253767839	396825	3767839	0.001683879	0.001575241	0	0	0	0	0.001575241	0.001466604	0	0	2.28369E-08	4.08783E-07	#VALUE!	4.3162E-07	0.4316197
3968753767839	396875	3767839	0.001848435	0.001729181	0	0	0	0	0.001729181	0.001609927	0	0	2.50686E-08	4.48731E-07	#VALUE!	4.738E-07	0.4737995
3969253767839	396925	3767839	0.001969909	0.001842818	0	0	0	0	0.001842818	0.001715727	0	0	2.6716E-08	4.7822E-07	#VALUE!	5.04936E-07	0.5049363
3969753767839	396975	3767839	0.002082829	0.001948453	0	0	0	0	0.001948453	0.001814077	0	0	2.82474E-08	5.05633E-07	#VALUE!	5.3388E-07	0.5338805
3970253767839	397025	3767839	0.002110951	0.001974761	0	0	0	0	0.001974761	0.00183857	0	0	2.86288E-08	5.1246E-07	#VALUE!	5.41089E-07	0.541089
3970753767839	397075	3767839	0.001971666	0.001844462	0	0	0	0	0.001844462	0.001717258	0	0	2.67398E-08	4.78647E-07	#VALUE!	5.05387E-07	0.5053868
3971253767839	397125	3767839	0.001817617	0.001700351	0	0	0	0	0.001700351	0.001583086	0	0	2.46506E-08	4.4125E-07	#VALUE!	4.659E-07	0.4659002
3971753767839	397175	3767839	0.001687081	0.001578237	0	0	0	0	0.001578237	0.001469393	0	0	2.28803E-08	4.0956E-07	#VALUE!	4.32441E-07	0.4324407
3972253767839	397225	3767839	0.001541274	0.001441837	0	0	0	0	0.001441837	0.0013424	0	0	2.09028E-08	3.74164E-07	#VALUE!	3.95067E-07	0.3950666
3972753767839	397275	3767839	0.001358633	0.001270979	0	0	0	0	0.001270979	0.001183326	0	0	1.84259E-08	3.29825E-07	#VALUE!	3.48251E-07	0.3482513
3973253767839	397325	3767839	0.001166267	0.001091024	0	0	0	0	0.001091024	0.001015781	0	0	1.5817E-08	2.83126E-07	#VALUE!	2.98943E-07	0.298943
3973753767839	397375	3767839	0.000970932	0.000908291	0	0	0	0	0.000908291	0.000845651	0	0	1.31678E-08	2.35706E-07	#VALUE!	2.48874E-07	0.2488739
3974753767839	397475	3767839	0.00070201	0.000656719	0	0	0	0	0.000656719	0.000611428	0	0	9.5207E-09	1.70422E-07	#VALUE!	1.79943E-07	0.1799425
3975253767839	397525	3767839	0.00061897	0.000579037	0	0	0	0	0.000579037	0.000539103	0	0	8.39451E-09	1.50263E-07	#VALUE!	1.58657E-07	0.1586574
3964253767889	396425	3767889	0.00070076	0.00065555	0	0	0	0	0.00065555	0.000610339	0	0	9.50375E-09	1.70118E-07	#VALUE!	1.79622E-07	0.1796221
3964753767889	396475	3767889	0.00077509	0.000725084	0	0	0	0	0.000725084	0.000675078	0	0	1.05118E-08	1.88163E-07	#VALUE!	1.98675E-07	0.1986746
3965253767889	396525	3767889	0.000885627	0.00082849	0	0	0	0	0.00082849	0.000771352	0	0	1.20109E-08	2.14997E-07	#VALUE!	2.27008E-07	0.2270081
3965753767889	396575	3767889	0.001030966	0.000964452	0	0	0	0	0.000964452	0.000897938	0	0	1.3982E-08	2.5028E-07	#VALUE!	2.64262E-07	0.2642621
3974753767889	397475	3767889	0.000827038	0.000773681	0	0	0	0	0.000773681	0.000720324	0	0	1.12163E-08	2.00774E-07	#VALUE!	2.1199E-07	0.2119904
3975253767889	397525	3767889	0.000700838	0.000655623	0	0	0	0	0.000655623	0.000610407	0	0	9.50481E-09	1.70137E-07	#VALUE!	1.79642E-07	0.1796421
3964253767939	396425	3767939	0.000766497	0.000717045	0	0	0	0	0.000717045	0.000667594	0	0	1.03953E-08	1.86077E-07	#VALUE!	1.96472E-07	0.196472
3964753767939	396475	3767939	0.000862426	0.000806785	0	0	0	0	0.000806785	0.000751145	0	0	1.16963E-08	2.09365E-07	#VALUE!	2.21061E-07	0.2210611
3965253767939	396525	3767939	0.001011436	0.000946182	0	0	0	0	0.000946182	0.000880928	0	0	1.37172E-08	2.45539E-07	#VALUE!	2.59256E-07	0.2592562
3974753767939	397475	3767939	0.000969409	0.000906866	0	0	0	0	0.000906866	0.000844324	0	0	1.31472E-08	2.35336E-07	#VALUE!	2.48483E-07	0.2484834
3975253767939	397525	3767939	0.000793486	0.000742294	0	0	0	0	0.000742294	0.000691101	0	0	1.07613E-08	1.92629E-07	#VALUE!	2.0339E-07	0.2033902
3964253767989	396425	3767989	0.000817195	0.000764473	0	0	0	0	0.000764473	0.000711751	0	0	1.10828E-08	1.98385E-07	#VALUE!	2.09467E-07	0.2094674
3964753767989	396475	3767989	0.000960503	0.000898535	0	0	0	0	0.000898535	0.000836567	0	0	1.30264E-08	2.33174E-07	#VALUE!	2.46201E-07	0.2462008
3974753767989	397475	3767989	0.001131192	0.001058212	0	0	0	0	0.001058212	0.000985231	0	0	1.53413E-08	2.74611E-07	#VALUE!	2.89952E-07	0.2899524
3975253767989	397525	3767989	0.000897149	0.000839269	0	0	0	0	0.000839269	0.000781388	0	0	1.21672E-08	2.17794E-07	#VALUE!	2.29962E-07	0.2299616
3964253768039	396425	3768039	0.000884846	0.000827759	0	0	0	0	0.000827759	0.000770672	0	0	1.20003E-08	2.14808E-07	#VALUE!	2.26808E-07	0.2268078
3964753768039	396475	3768039	0.001069635	0.001000626	0	0	0	0	0.001000626	0.000931617	0	0	1.45064E-08	2.59667E-07	#VALUE!	2.74174E-07	0.2741738
3974753768039	397475	3768039	0.001300708	0.001216792	0	0	0	0	0.001216792	0.001132875	0	0	1.76403E-08	3.15763E-07	#VALUE!	3.33404E-07	0.3334037
3975253768039	397525	3768039	0.000995071	0.000930873	0	0	0	0	0.000930873	0.000866674	0	0	1.34952E-08	2.41566E-07	#VALUE!	2.55061E-07	0.2550612
3964253768089	396425	3768089	0.000954957	0.000893347	0	0	0	0	0.000893347	0.000831737	0	0	1.29512E-08	2.31828E-07	#VALUE!	2.44779E-07	0.2447791
3964753768089	396475	3768089	0.001185289	0.001108818	0	0	0	0	0.001108818	0.001032348	0	0	1.6075E-08	2.87744E-07	#VALUE!	3.03819E-07	0.3038188
3974753768089	397475	3768089	0.001484521	0.001388745	0	0	0	0	0.001388745	0.00129297	0	0	2.01332E-08	3.60386E-07	#VALUE!	3.80519E-07	0.3805194
3975253768089	397525	3768089	0.001092797	0.001022294	0	0	0	0	0.001022294	0.000951791	0	0	1.48206E-08	2.6529E-07	#VALUE!	2.80111E-07	0.2801108
3964253768139	396425	3768139	0.001048972	0.000981297	0	0	0	0	0.000981297	0.000913621	0	0	1.42262E-08	2.54651E-07	#VALUE!	2.68878E-07	0.2688775
3964753768139	396475	3768139	0.001285592	0.001202651	0	0	0	0	0.001202651	0.00111971	0	0	1.74353E-08	3.12094E-07	#VALUE!	3.29529E-07	0.3295292
3974253768139	397425	3768139	0.002363898	0.002211389	0	0	0	0	0.002211389	0.002058879	0	0	3.20593E-08	5.73866E-07	#VALUE!	6.05926E-07	0.6059256
3974753768139	397475	3768139	0.00161658	0.001512284	0	0	0	0	0.001512284	0.001407989	0	0	2.19241E-08	3.92445E-07	#VALUE!	4.14369E-07	0.4143694
3975253768139	397525	3768139	0.001186539	0.001109988	0	0	0	0	0.001109988	0.001033437	0	0	1.60919E-08	2.88047E-07	#VALUE!	3.04139E-07	0.3041392
3964253768189	396425	3768189	0.001091	0.001020613	0	0	0	0	0.001020613	0.000950226	0	0	1.47962E-08	2.64854E-07	#VALUE!	2.7965E-07	0.2796503
3964753768189	396475	3768189	0.00136914	0.001280808	0	0	0	0	0.001280808	0.001192477	0	0	1.85684E-08	3.32376E-07	#VALUE!	3.50944E-07	0.3509444
3973753768189	397375	3768189	0.003999304	0.003741285	0	0	0	0	0.003741285	0.003483265	0	0	5.42388E-08	9.70882E-07	#VALUE!	1.02512E-06	1.0251206

Garvey Reservoir Rehab - Unmitigated Reservoir Cover and Liner Work			Demolition - 2025	Demolition - 2026	ite Preparation - 202	ite Preparation - 202	Grading - 2025	Grading - 2026	nfrastructure - 2025	nfrastructure - 2026	Paving - 2025	itectural Coating - 2	Child Risk				
Unique Identifier	X (UTM)	Y (UTM)	2025	2026	1900	1900	1900	1900	2026	2027	1900	1900	3rd Trimester	0<2	2<16	Total	per million
3974253768189	397425	3768189	0.002425885	0.002269376	0	0	0	0	0.002269376	0.002112868	0	0	3.29E-08	5.88914E-07	#VALUE!	6.21814E-07	0.6218143
3974753768189	397475	3768189	0.001727703	0.001616238	0	0	0	0	0.001616238	0.001504773	0	0	2.34312E-08	4.19422E-07	#VALUE!	4.42853E-07	0.442853
3975253768189	397525	3768189	0.00127325	0.001191105	0	0	0	0	0.001191105	0.00110896	0	0	1.72679E-08	3.09098E-07	#VALUE!	3.26365E-07	0.3263654
3964253768239	396425	3768239	0.001110217	0.00103859	0	0	0	0	0.00103859	0.000966963	0	0	1.50568E-08	2.69519E-07	#VALUE!	2.84576E-07	0.2845761
3964753768239	396475	3768239	0.001420347	0.001328711	0	0	0	0	0.001328711	0.001237076	0	0	1.92628E-08	3.44807E-07	#VALUE!	3.6407E-07	0.3640699
3973753768239	397375	3768239	0.003937981	0.003683918	0	0	0	0	0.003683918	0.003429855	0	0	5.34071E-08	9.55995E-07	#VALUE!	1.0094E-06	1.0094021
3974253768239	397425	3768239	0.002391122	0.002236856	0	0	0	0	0.002236856	0.00208259	0	0	3.24285E-08	5.80475E-07	#VALUE!	6.12904E-07	0.6129038
3974753768239	397475	3768239	0.001690714	0.001581636	0	0	0	0	0.001581636	0.001472557	0	0	2.29296E-08	4.10442E-07	#VALUE!	4.33372E-07	0.4333718
3975253768239	397525	3768239	0.00127489	0.001192639	0	0	0	0	0.001192639	0.001110388	0	0	1.72901E-08	3.09496E-07	#VALUE!	3.26786E-07	0.3267859
3964253768289	396425	3768289	0.001095335	0.001024669	0	0	0	0	0.001024669	0.000954002	0	0	1.4855E-08	2.65907E-07	#VALUE!	2.80762E-07	0.2807616
3964753768289	396475	3768289	0.00142808	0.001335946	0	0	0	0	0.001335946	0.001243812	0	0	1.93677E-08	3.46685E-07	#VALUE!	3.66052E-07	0.3660523
3973253768289	397325	3768289	0.005331221	0.004987271	0	0	0	0	0.004987271	0.004643321	0	0	7.23023E-08	1.29422E-06	#VALUE!	1.36652E-06	1.3665238
3973753768289	397375	3768289	0.003566099	0.003336028	0	0	0	0	0.003336028	0.003105958	0	0	4.83636E-08	8.65716E-07	#VALUE!	9.14079E-07	0.9140795
3974253768289	397425	3768289	0.002519471	0.002356924	0	0	0	0	0.002356924	0.002194378	0	0	3.41692E-08	6.11633E-07	#VALUE!	6.45803E-07	0.6458027
3974753768289	397475	3768289	0.001826757	0.001708902	0	0	0	0	0.001708902	0.001591046	0	0	2.47746E-08	4.43468E-07	#VALUE!	4.68243E-07	0.468243
3975253768289	397525	3768289	0.001365156	0.001277081	0	0	0	0	0.001277081	0.001189007	0	0	1.85143E-08	3.31409E-07	#VALUE!	3.49923E-07	0.3499232
3964253768339	396425	3768339	0.001074283	0.001004974	0	0	0	0	0.001004974	0.000935665	0	0	1.45695E-08	2.60796E-07	#VALUE!	2.75365E-07	0.2753652
3964753768339	396475	3768339	0.001390896	0.001301161	0	0	0	0	0.001301161	0.001211425	0	0	1.88634E-08	3.37658E-07	#VALUE!	3.56521E-07	0.356521
3965253768339	396525	3768339	0.001963425	0.001836752	0	0	0	0	0.001836752	0.00171008	0	0	2.66281E-08	4.76646E-07	#VALUE!	5.03274E-07	0.5032743
3972753768339	397275	3768339	0.00581239	0.005437398	0	0	0	0	0.005437398	0.005062405	0	0	7.8828E-08	1.41103E-06	#VALUE!	1.48986E-06	1.4898595
3973253768339	397325	3768339	0.004316386	0.00403791	0	0	0	0	0.00403791	0.003759433	0	0	5.85391E-08	1.04786E-06	#VALUE!	1.1064E-06	1.1063966
3973753768339	397375	3768339	0.003145276	0.002942355	0	0	0	0	0.002942355	0.002739434	0	0	4.26564E-08	7.63556E-07	#VALUE!	8.06212E-07	0.8062121
3974253768339	397425	3768339	0.002357961	0.002205835	0	0	0	0	0.002205835	0.002053708	0	0	3.19788E-08	5.72425E-07	#VALUE!	6.04404E-07	0.6044038
3974753768339	397475	3768339	0.001794572	0.001678793	0	0	0	0	0.001678793	0.001563014	0	0	2.43381E-08	4.35655E-07	#VALUE!	4.59993E-07	0.4599932
3975253768339	397525	3768339	0.001395661	0.001305618	0	0	0	0	0.001305618	0.001215576	0	0	1.8928E-08	3.38814E-07	#VALUE!	3.57742E-07	0.3577425
3964253768389	396425	3768389	0.001018506	0.000952796	0	0	0	0	0.000952796	0.000887086	0	0	1.3813E-08	2.47255E-07	#VALUE!	2.61068E-07	0.2610683
3964753768389	396475	3768389	0.001311254	0.001226657	0	0	0	0	0.001226657	0.00114206	0	0	1.77833E-08	3.18324E-07	#VALUE!	3.36107E-07	0.3361069
3965253768389	396525	3768389	0.00181211	0.001695199	0	0	0	0	0.001695199	0.001578289	0	0	2.45759E-08	4.39913E-07	#VALUE!	4.64489E-07	0.4644885
3972253768389	397225	3768389	0.005399731	0.005051361	0	0	0	0	0.005051361	0.004702991	0	0	7.32315E-08	1.31085E-06	#VALUE!	1.38408E-06	1.3840845
3972753768389	397275	3768389	0.004443758	0.004157064	0	0	0	0	0.004157064	0.00387037	0	0	6.02665E-08	1.07878E-06	#VALUE!	1.13905E-06	1.1390452
3973253768389	397325	3768389	0.003552741	0.003323532	0	0	0	0	0.003323532	0.003094323	0	0	4.81825E-08	8.62473E-07	#VALUE!	9.10655E-07	0.9106554
3973753768389	397375	3768389	0.002754646	0.002576927	0	0	0	0	0.002576927	0.002399208	0	0	3.73587E-08	6.68725E-07	#VALUE!	7.06084E-07	0.7060839
3974253768389	397425	3768389	0.002143253	0.002004979	0	0	0	0	0.002004979	0.001866704	0	0	2.90669E-08	5.20302E-07	#VALUE!	5.49369E-07	0.5493688
3974753768389	397475	3768389	0.001688644	0.001579699	0	0	0	0	0.001579699	0.001470754	0	0	2.29015E-08	4.0994E-07	#VALUE!	4.32841E-07	0.4328412
3975253768389	397525	3768389	0.001344142	0.001257423	0	0	0	0	0.001257423	0.001170704	0	0	1.82293E-08	3.26308E-07	#VALUE!	3.44537E-07	0.3445369
3964253768439	396425	3768439	0.000970463	0.000907853	0	0	0	0	0.000907853	0.000845242	0	0	1.31615E-08	2.35592E-07	#VALUE!	2.48754E-07	0.2487538
3964753768439	396475	3768439	0.001210755	0.001132642	0	0	0	0	0.001132642	0.001054529	0	0	1.64203E-08	2.93926E-07	#VALUE!	3.10347E-07	0.3103465
3965253768439	396525	3768439	0.00161822	0.001513819	0	0	0	0	0.001513819	0.001409418	0	0	2.19464E-08	3.92843E-07	#VALUE!	4.1479E-07	0.4147898
3971753768439	397175	3768439	0.004426494	0.004140914	0	0	0	0	0.004140914	0.003855334	0	0	6.00324E-08	1.07459E-06	#VALUE!	1.13462E-06	1.1346199
3972253768439	397225	3768439	0.00413441	0.003867674	0	0	0	0	0.003867674	0.003600938	0	0	5.60711E-08	1.00368E-06	#VALUE!	1.05975E-06	1.0597515
3972753768439	397275	3768439	0.003532079	0.003304203	0	0	0	0	0.003304203	0.003076327	0	0	4.79023E-08	8.57457E-07	#VALUE!	9.05359E-07	0.9053592
3973253768439	397325	3768439	0.003012436	0.002818085	0	0	0	0	0.002818085	0.002623735	0	0	4.08548E-08	7.31307E-07	#VALUE!	7.72162E-07	0.7721619
3973753768439	397375	3768439	0.002487559	0.002327072	0	0	0	0	0.002327072	0.002166584	0	0	3.37364E-08	6.03887E-07	#VALUE!	6.37623E-07	0.637623
3974253768439	397425	3768439	0.00202342	0.001892876	0	0	0	0	0.001892876	0.001762333	0	0	2.74417E-08	4.91211E-07	#VALUE!	5.18653E-07	0.5186525
3974753768439	397475	3768439	0.001589941	0.001487364	0	0	0	0	0.001487364	0.001384788	0	0	2.15629E-08	3.85978E-07	#VALUE!	4.07541E-07	0.4075413
3975253768439	397525	3768439	0.00128985	0.001206634	0	0	0	0	0.001206634	0.001123418	0	0	1.7493E-08	3.13127E-07	#VALUE!	3.3062E-07	0.3306204
3964253768489	396425	3768489	0.000889533	0.000832144	0	0	0	0	0.000832144	0.000774754	0	0	1.20639E-08	2.15945E-07	#VALUE!	2.28009E-07	0.2280093
3964753768489	396475	3768489	0.001094242	0.001023646	0	0	0	0	0.001023646	0.000953049	0	0	1.48402E-08	2.65641E-07	#VALUE!	2.80481E-07	0.2804812
3965253768489	396525	3768489	0.001424799	0.001332877	0	0	0	0	0.001332877	0.001240954	0	0	1.93232E-08	3.45888E-07	#VALUE!	3.65211E-07	0.3652113
3970753768489	397075	3768489	0.004250572	0.003976341	0	0	0	0	0.003976341	0.003702111	0	0	5.76465E-08	1.03188E-06	#VALUE!	1.08953E-06	1.0895267
3971253768489	397125	3768489	0.003786198	0.003541927	0	0	0	0	0.003541927	0.003297656	0	0	5.13486E-08	9.19147E-07	#VALUE!	9.70496E-07	0.9704961
3971753768489	397175	3768489	0.003432322	0.003210882	0	0	0	0	0.003210882	0.002989442	0	0	4.65493E-08	8.3324E-07	#VALUE!	8.79789E-07	0.879789
3972253768489	397225	3768489	0.003167384	0.002963036	0	0	0	0	0.002963036	0.002758689	0	0	4.29562E-08	7.68923E-07	#VALUE!	8.11879E-07	0.8118788
3972753768489	397275	3768489	0.002907133	0.002719576	0	0	0	0	0.002719576	0.002532019	0	0	3.94267E-08	7.05743E-07	#VALUE!	7.4517E-07	0.74517
3973253768489	397325	3768489	0.002565443	0.002399931	0	0	0	0	0.002399931	0.002234418	0	0	3.47927E-08	6.22794E-07	#VALUE!	6.57587E-07	0.6575866
3973753768489	397375	3768489	0.002169813	0.002029825	0	0	0	0	0.002029825	0.001889837	0	0	2.94271E-08	5.2675E-07	#VALUE!	5.56177E-07	0.5561768
3974253768489	397425	3768489	0.001820078	0.001702653	0	0	0	0	0.001702653	0.001585229	0	0	2.4684E-08	4.41847E-07	#VALUE!	4.66531E-07	0.466531
3974753768489	397475	3768489	0.001522525	0.001424298	0	0	0	0	0.001424298	0.00132607	0	0	2.06486E-08	3.69612E-07	#VALUE!	3.90261E-07	0.3902609
3975253768489	397525	3768489	0.001267938	0.001186135	0	0	0	0	0.001186135	0.001104333	0	0	1.71958E-08	3.07808E-07	#VALUE!	3.25004E-07	0.3250038
3964253768539	396425	3768539	0.00081036	0.000758079	0	0	0	0	0.000758079	0.000705797	0	0	1.09901E-08	1.96725E-07	#VALUE!	2.07715E-07	0.2077153
3964753768539	396475	3768539	0.000986243	0.000922615	0	0	0	0	0.000922615	0.000858986	0	0	1.33755E-08	2.39423E-07	#VALUE!	2.52799E-07	0.2527985
3965253768539	396525	3768539	0.00124126	0.001161179	0	0	0	0	0.001161179	0.001081098	0	0	1.6834E-08	3.01332E-07	#VALUE!	3.18166E-07	0.3181657
3965753768539	396575	3768539	0.001663958	0.001556606	0	0	0	0	0.001556606	0.001449254	0	0	2.25667E-08	4.03947E-07	#VALUE!	4.26514E-07	0.4265137
3970253768539	397025	3768539	0.003644022	0.003408924	0	0	0	0	0.003408924	0.003173826	0	0	4.94204E-08	8.84633E-07	#VALUE!	9.34053E-07	0.9340531
3970753768539	397075	3768539	0.0033253	0.003110764	0	0	0	0	0.003110764	0.002896229	0	0	4.50979E-08	8.07259E-07	#VALUE!	8.52357E-07	0.8523566
3971253768539	397125	3768539	0.003033372	0.00283767	0	0	0	0	0.00283767	0.002641969	0	0	4.11388E-08	7.36389E-07	#VALUE!	7.77528E-07	0.7775282
3971753768539	397175	3768539	0.002803938	0.002623039	0	0	0	0	0.002623039	0.00244214	0	0	3.80272E-08	6.80692E-07	#VALUE!	7.18719E-07	0.7187188
3972253768539	397225	3768539	0.002581067	0.002414547	0	0	0	0	0.002414547	0.002248026	0	0	3.50046E-08	6.26587E-07	#VALUE!	6.61591E-07	0.6615913
3972753768539	397275	3768539	0.002445258	0.0022875	0	0	0	0	0.0022875	0.002129741	0	0	3.31627E-08	5.93617E-07	#VALUE!	6.2678E-07	0.6267802
3973253768539	397325	3768539	0.00218571	0.002044697	0	0	0	0	0.002044697	0.001903683	0	0	2.96427E-08	5.30609E-07	#VALUE!	5.60252E-07	0.5602516
3973753768539	397375	3768539	0.001893157	0.001771018	0	0	0	0	0.001771018	0.001648879	0	0	2.56751E-08	4.59588E-07	#VALUE!	4.85263E-07	0.4852631

Garvey Reservoir Rehab - Unmitigated Reservoir Cover and Liner Work			Demolition - 2025	Demolition - 2026	ite Preparation - 202	ite Preparation - 202	Grading - 2025	Grading - 2026	nfrastructure - 2025	nfrastructure - 2026	Paving - 2025	itectural Coating - 2	Child Risk				
Unique Identifier	X (UTM)	Y (UTM)	2025	2026	1900	1900	1900	1900	2026	2027	1900	1900	3rd Trimester	0<2	2<16	Total	per million
3974253768539	397425	3768539	0.001634352	0.00152891	0	0	0	0	0.00152891	0.001423467	0	0	2.21652E-08	3.9676E-07	#VALUE!	4.18925E-07	0.4189247
3974753768539	397475	3768539	0.001395817	0.001305765	0	0	0	0	0.001305765	0.001215712	0	0	1.89302E-08	3.38852E-07	#VALUE!	3.57783E-07	0.3577825
3975253768539	397525	3768539	0.001188374	0.001111705	0	0	0	0	0.001111705	0.001035036	0	0	1.61168E-08	2.88493E-07	#VALUE!	3.0461E-07	0.3046097
3964253768589	396425	3768589	0.000741225	0.000693404	0	0	0	0	0.000693404	0.000645583	0	0	1.00525E-08	1.79942E-07	#VALUE!	1.89994E-07	0.1899944
3964753768589	396475	3768589	0.000882776	0.000825822	0	0	0	0	0.000825822	0.000768869	0	0	1.19723E-08	2.14305E-07	#VALUE!	2.26277E-07	0.2262772
3965253768589	396525	3768589	0.001098382	0.001027519	0	0	0	0	0.001027519	0.000956655	0	0	1.48963E-08	2.66646E-07	#VALUE!	2.81542E-07	0.2815425
3965753768589	396575	3768589	0.001388084	0.00129853	0	0	0	0	0.00129853	0.001208976	0	0	1.88253E-08	3.36975E-07	#VALUE!	3.558E-07	0.3558002
3966253768589	396625	3768589	0.001770121	0.00165592	0	0	0	0	0.00165592	0.001541718	0	0	2.40065E-08	4.29719E-07	#VALUE!	4.53726E-07	0.4537258
3968253768589	396825	3768589	0.00334315	0.003127463	0	0	0	0	0.003127463	0.002911776	0	0	4.534E-08	8.11592E-07	#VALUE!	8.56932E-07	0.856932
3968753768589	396875	3768589	0.003416972	0.003196522	0	0	0	0	0.003196522	0.002976072	0	0	4.63412E-08	8.29513E-07	#VALUE!	8.75854E-07	0.8758543
3969253768589	396925	3768589	0.003259095	0.00304883	0	0	0	0	0.00304883	0.002838566	0	0	4.42E-08	7.91187E-07	#VALUE!	8.35387E-07	0.8353866
3969753768589	396975	3768589	0.003135082	0.002932818	0	0	0	0	0.002932818	0.002730555	0	0	4.25182E-08	7.61081E-07	#VALUE!	8.03599E-07	0.803599
3970253768589	397025	3768589	0.002937208	0.002747711	0	0	0	0	0.002747711	0.002558214	0	0	3.98346E-08	7.13045E-07	#VALUE!	7.52879E-07	0.7528791
3970753768589	397075	3768589	0.002698752	0.002524639	0	0	0	0	0.002524639	0.002350526	0	0	3.66006E-08	6.55156E-07	#VALUE!	6.91757E-07	0.6917569
3971253768589	397125	3768589	0.00253361	0.002370151	0	0	0	0	0.002370151	0.002206693	0	0	3.4361E-08	6.15066E-07	#VALUE!	6.49427E-07	0.6494269
3971753768589	397175	3768589	0.00235968	0.002207442	0	0	0	0	0.002207442	0.002055205	0	0	3.20021E-08	5.72842E-07	#VALUE!	6.04844E-07	0.6048443
3972253768589	397225	3768589	0.002172001	0.002031872	0	0	0	0	0.002031872	0.001891742	0	0	2.94568E-08	5.27281E-07	#VALUE!	5.56737E-07	0.5567375
3972753768589	397275	3768589	0.00198936	0.001861014	0	0	0	0	0.001861014	0.001732668	0	0	2.69798E-08	4.82942E-07	#VALUE!	5.09922E-07	0.5099222
3973253768589	397325	3768589	0.001870269	0.001749606	0	0	0	0	0.001749606	0.001628944	0	0	2.53647E-08	4.54031E-07	#VALUE!	4.79396E-07	0.4793961
3973753768589	397375	3768589	0.001654155	0.001547435	0	0	0	0	0.001547435	0.001440715	0	0	2.24337E-08	4.01567E-07	#VALUE!	4.24001E-07	0.4240007
3974253768589	397425	3768589	0.001467257	0.001372595	0	0	0	0	0.001372595	0.001277933	0	0	1.9899E-08	3.56195E-07	#VALUE!	3.76094E-07	0.3760941
3974753768589	397475	3768589	0.001276414	0.001194064	0	0	0	0	0.001194064	0.001111715	0	0	1.73108E-08	3.09866E-07	#VALUE!	3.27176E-07	0.3271764
3975253768589	397525	3768589	0.00110596	0.001034607	0	0	0	0	0.001034607	0.000963255	0	0	1.49991E-08	2.68486E-07	#VALUE!	2.83485E-07	0.2834848
3964253768639	396425	3768639	0.000674669	0.000631142	0	0	0	0	0.000631142	0.000587615	0	0	9.14989E-09	1.63784E-07	#VALUE!	1.72934E-07	0.1729342
3964753768639	396475	3768639	0.000785323	0.000734657	0	0	0	0	0.000734657	0.000683991	0	0	1.06506E-08	1.90647E-07	#VALUE!	2.01298E-07	0.2012977
3965253768639	396525	3768639	0.000960074	0.000898133	0	0	0	0	0.000898133	0.000836193	0	0	1.30206E-08	2.3307E-07	#VALUE!	2.46091E-07	0.2460906
3965753768639	396575	3768639	0.001166267	0.001091024	0	0	0	0	0.001091024	0.001015781	0	0	1.5817E-08	2.83126E-07	#VALUE!	2.98943E-07	0.298943
3966253768639	396625	3768639	0.001422026	0.001330282	0	0	0	0	0.001330282	0.001238539	0	0	1.92856E-08	3.45215E-07	#VALUE!	3.645E-07	0.3645005
3966753768639	396675	3768639	0.001724031	0.001612804	0	0	0	0	0.001612804	0.001501576	0	0	2.33814E-08	4.1853E-07	#VALUE!	4.41912E-07	0.4419119
3967253768639	396725	3768639	0.002039356	0.001907784	0	0	0	0	0.001907784	0.001776213	0	0	2.76579E-08	4.95079E-07	#VALUE!	5.22737E-07	0.5227373
3967753768639	396775	3768639	0.002298982	0.00215066	0	0	0	0	0.00215066	0.002002339	0	0	3.11789E-08	5.58107E-07	#VALUE!	5.89286E-07	0.5892859
3968253768639	396825	3768639	0.002493028	0.002332187	0	0	0	0	0.002332187	0.002171347	0	0	3.38106E-08	6.05214E-07	#VALUE!	6.39025E-07	0.6390247
3968753768639	396875	3768639	0.002557358	0.002392367	0	0	0	0	0.002392367	0.002227376	0	0	3.4683E-08	6.20831E-07	#VALUE!	6.55514E-07	0.6555141
3969253768639	396925	3768639	0.002531032	0.00236774	0	0	0	0	0.00236774	0.002204447	0	0	3.4326E-08	6.1444E-07	#VALUE!	6.48766E-07	0.6487662
3969753768639	396975	3768639	0.002477131	0.002317316	0	0	0	0	0.002317316	0.002157501	0	0	3.3595E-08	6.01355E-07	#VALUE!	6.3495E-07	0.6349498
3970253768639	397025	3768639	0.002365578	0.00221296	0	0	0	0	0.00221296	0.002060342	0	0	3.20821E-08	5.74274E-07	#VALUE!	6.06356E-07	0.6063561
3970753768639	397075	3768639	0.002212817	0.002070055	0	0	0	0	0.002070055	0.001927293	0	0	3.00104E-08	5.37189E-07	#VALUE!	5.672E-07	0.5671998
3971253768639	397125	3768639	0.002042793	0.001911	0	0	0	0	0.001911	0.001779207	0	0	2.77045E-08	4.95914E-07	#VALUE!	5.23618E-07	0.5236184
3971753768639	397175	3768639	0.001972252	0.00184501	0	0	0	0	0.00184501	0.001717768	0	0	2.67478E-08	4.78789E-07	#VALUE!	5.05537E-07	0.505537
3972253768639	397225	3768639	0.001850153	0.001730789	0	0	0	0	0.001730789	0.001611424	0	0	2.50919E-08	4.49148E-07	#VALUE!	4.7424E-07	0.4742401
3972753768639	397275	3768639	0.00172907	0.001617517	0	0	0	0	0.001617517	0.001505964	0	0	2.34497E-08	4.19754E-07	#VALUE!	4.43203E-07	0.4432034
3973253768639	397325	3768639	0.001610135	0.001506255	0	0	0	0	0.001506255	0.001402376	0	0	2.18367E-08	3.90881E-07	#VALUE!	4.12717E-07	0.4127174
3973753768639	397375	3768639	0.001449289	0.001355787	0	0	0	0	0.001355787	0.001262284	0	0	1.96553E-08	3.51833E-07	#VALUE!	3.71489E-07	0.3714887
3974253768639	397425	3768639	0.001302075	0.001218071	0	0	0	0	0.001218071	0.001134066	0	0	1.76588E-08	3.16095E-07	#VALUE!	3.33754E-07	0.3337541
3974753768639	397475	3768639	0.001165525	0.00109033	0	0	0	0	0.00109033	0.001015134	0	0	1.58069E-08	2.82946E-07	#VALUE!	2.98753E-07	0.2987528
3975253768639	397525	3768639	0.001025459	0.0009593	0	0	0	0	0.0009593	0.000893141	0	0	1.39073E-08	2.48943E-07	#VALUE!	2.6285E-07	0.2628504
3964253768689	396425	3768689	0.000612408	0.000572898	0	0	0	0	0.000572898	0.000533388	0	0	8.30552E-09	1.4867E-07	#VALUE!	1.56975E-07	0.1569754
3964753768689	396475	3768689	0.000699744	0.0006546	0	0	0	0	0.0006546	0.000609455	0	0	9.48997E-09	1.69872E-07	#VALUE!	1.79362E-07	0.1793618
3965253768689	396525	3768689	0.00082075	0.000767798	0	0	0	0	0.000767798	0.000714847	0	0	1.11311E-08	1.99247E-07	#VALUE!	2.10378E-07	0.2103784
3965753768689	396575	3768689	0.000978275	0.000915161	0	0	0	0	0.000915161	0.000852046	0	0	1.32674E-08	2.37489E-07	#VALUE!	2.50756E-07	0.2507561
3966253768689	396625	3768689	0.001151151	0.001076883	0	0	0	0	0.001076883	0.001002615	0	0	1.5612E-08	2.79456E-07	#VALUE!	2.95068E-07	0.2950685
3966753768689	396675	3768689	0.001355626	0.001268166	0	0	0	0	0.001268166	0.001180706	0	0	1.83851E-08	3.29095E-07	#VALUE!	3.4748E-07	0.3474804
3967253768689	396725	3768689	0.001549789	0.001449802	0	0	0	0	0.001449802	0.001349816	0	0	2.10183E-08	3.76231E-07	#VALUE!	3.97249E-07	0.3972491
3967753768689	396775	3768689	0.001731531	0.001619819	0	0	0	0	0.001619819	0.001508107	0	0	2.34831E-08	4.20351E-07	#VALUE!	4.43834E-07	0.4438341
3968253768689	396825	3768689	0.001871441	0.001750702	0	0	0	0	0.001750702	0.001629964	0	0	2.53806E-08	4.54316E-07	#VALUE!	4.79696E-07	0.4796965
3968753768689	396875	3768689	0.001963933	0.001837227	0	0	0	0	0.001837227	0.001710522	0	0	2.6635E-08	4.7677E-07	#VALUE!	5.03404E-07	0.5034045
3969253768689	396925	3768689	0.001986118	0.001857981	0	0	0	0	0.001857981	0.001729845	0	0	2.69358E-08	4.82155E-07	#VALUE!	5.09091E-07	0.5090912
3969753768689	396975	3768689	0.001965456	0.001838652	0	0	0	0	0.001838652	0.001711849	0	0	2.66556E-08	4.77139E-07	#VALUE!	5.03795E-07	0.503795
3970253768689	397025	3768689	0.001917843	0.001794111	0	0	0	0	0.001794111	0.001670379	0	0	2.60099E-08	4.65581E-07	#VALUE!	4.91591E-07	0.4915905
3970753768689	397075	3768689	0.001856207	0.001736452	0	0	0	0	0.001736452	0.001616697	0	0	2.5174E-08	4.50618E-07	#VALUE!	4.75792E-07	0.4757919
3971253768689	397125	3768689	0.001724891	0.001613607	0	0	0	0	0.001613607	0.001502324	0	0	2.33931E-08	4.18739E-07	#VALUE!	4.42132E-07	0.4421321
3971753768689	397175	3768689	0.001671926	0.00156406	0	0	0	0	0.00156406	0.001456194	0	0	2.26748E-08	4.05881E-07	#VALUE!	4.28556E-07	0.4285561
3972253768689	397225	3768689	0.001599784	0.001496572	0	0	0	0	0.001496572	0.00139336	0	0	2.16964E-08	3.88368E-07	#VALUE!	4.10064E-07	0.4100643
3972753768689	397275	3768689	0.00150159	0.001404713	0	0	0	0	0.001404713	0.001307836	0	0	2.03646E-08	3.6453E-07	#VALUE!	3.84895E-07	0.3848945
3973253768689	397325	3768689	0.001400895	0.001310515	0	0	0	0	0.001310515	0.001220134	0	0	1.8999E-08	3.40085E-07	#VALUE!	3.59084E-07	0.3590841
3973753768689	397375	3768689	0.001290241	0.001206999	0	0	0	0	0.001206999	0.001123758	0	0	1.74983E-08	3.13222E-07	#VALUE!	3.30721E-07	0.3307206
3974253768689	397425	3768689	0.00116986	0.001094385	0	0	0	0	0.001094385	0.001018911	0	0	1.58657E-08	2.83998E-07	#VALUE!	2.99864E-07	0.2998641
3974753768689	397475	3768689	0.001052956	0.000985024	0	0	0	0	0.000985024	0.000917091	0	0	1.42803E-08	2.55618E-07	#VALUE!	2.69899E-07	0.2698987
3975253768689	397525	3768689	0.000941872	0.000881106	0	0	0	0	0.000881106	0.00082034	0	0	1.27737E-08	2.28651E-07	#VALUE!	2.41425E-07	0.2414251

Garvey Reservoir Rehab - Unmitigated Reservoir Cover and Liner Work

Offroad DPM Emissions, Ground Level Concentrations and Health Risk Calculations

Residential Receptors

Phase	Year	Emissions (lbs/day)	Meters	lbs/meter	meters (h1)	lbs/day (H1)	g/s (H1)	meters (h2)	lbs/day (H2)	g/s (H2)	hrs/day
Demolition - 2025	2025	0.0100	1932.1	5.17572E-06	691.2	0.003577455	4.50749E-05	1240.9	0.006422545	8.09223E-05	10.00
Demolition - 2026	2026	0.0100	1932.1	5.17572E-06	691.2	0.003577455	4.50749E-05	1240.9	0.006422545	8.09223E-05	10.00
Site Preparation - 2025	1900	0.0000	1932.1	0	691.2	0	0	1240.9	0	0	10.00
Site Preparation - 2026	1900	0.0000	1932.1	0	691.2	0	0	1240.9	0	0	10.00
Grading - 2025	1900	0.0000	1932.1	0	691.2	0	0	1240.9	0	0	10.00
Grading - 2026	1900	0.0000	1932.1	0	691.2	0	0	1240.9	0	0	10.00
Infrastructure - 2025	2026	0.0400	1932.1	2.07029E-05	691.2	0.014309818	0.0001803	1240.9	0.025690182	0.000323689	10.00
Infrastructure - 2026	2027	0.0400	1932.1	2.07029E-05	691.2	0.014309818	0.0001803	1240.9	0.025690182	0.000323689	10.00
Paving - 2025	1900	0.0000	1932.1	0	691.2	0	0	1240.9	0	0	10.00
Architectural Coating - 2026	1900	0.0000	1932.1	0	691.2	0	0	1240.9	0	0	10.00

		AERMOD Column Identifier:	*5*	*5*	*5*	*5*	*5*	*5*	*5*	*5*	*5*	*5*				
			6	*6*	*6*	*6*	*6*	*6*	*6*	*6*	*6*	*6*			*MAX:*	1.04807
Garvey Reservoir Rehab - Unmitigated Reservoir Cover and Liner Work			Demolition - 2025	Demolition - 2026	Site Preparation - 2025	te Preparation - 202	Grading - 2025	Grading - 2026	Infrastructure - 2025	nfrastructure - 2026	Paving - 2025	rchitectural Coating - 202	Child Risk			
Unique Identifier	X (UTM)	Y (UTM)	2025	2026	1900	1900	1900	1900	2026	2027	1900	1900	3rd Trimester	0<2	Total	per million
396166.283767377.2	396166.28	3767377	3.83011E-06	3.83011E-06	0	0	0	0	1.53205E-05	1.53205E-05	0	0	5.19442E-11	3.86929E-09	3.92123E-09	0.0039212
396266.283767377.2	396266.28	3767377	3.91694E-06	3.91694E-06	0	0	0	0	1.56678E-05	1.56678E-05	0	0	5.31218E-11	3.95701E-09	4.01013E-09	0.0040101
396366.283767377.2	396366.28	3767377	4.07625E-06	4.07625E-06	0	0	0	0	1.6305E-05	1.6305E-05	0	0	5.52823E-11	4.11795E-09	4.17323E-09	0.0041732
396466.283767377.2	396466.28	3767377	4.18245E-06	4.18245E-06	0	0	0	0	1.67298E-05	1.67298E-05	0	0	5.67227E-11	4.22524E-09	4.28196E-09	0.004282
396566.283767377.2	396566.28	3767377	4.58512E-06	4.58512E-06	0	0	0	0	1.83405E-05	1.83405E-05	0	0	6.21836E-11	4.63202E-09	4.6942E-09	0.0046942
396666.283767377.2	396666.28	3767377	4.33497E-06	4.33497E-06	0	0	0	0	1.73399E-05	1.73399E-05	0	0	5.87912E-11	4.37932E-09	4.43811E-09	0.0044381
396766.283767377.2	396766.28	3767377	4.31797E-06	4.31797E-06	0	0	0	0	1.72719E-05	1.72719E-05	0	0	5.85606E-11	4.36214E-09	4.4207E-09	0.0044207
396866.283767377.2	396866.28	3767377	4.32176E-06	4.32176E-06	0	0	0	0	1.7287E-05	1.7287E-05	0	0	5.86119E-11	4.36596E-09	4.42457E-09	0.0044246
396966.283767377.2	396966.28	3767377	4.37894E-06	4.37894E-06	0	0	0	0	1.75158E-05	1.75158E-05	0	0	5.93874E-11	4.42373E-09	4.48312E-09	0.0044831
397066.283767377.2	397066.28	3767377	4.26851E-06	4.26851E-06	0	0	0	0	1.7074E-05	1.7074E-05	0	0	5.78898E-11	4.31217E-09	4.37006E-09	0.0043701
397166.283767377.2	397166.28	3767377	4.21012E-06	4.21012E-06	0	0	0	0	1.68405E-05	1.68405E-05	0	0	5.70979E-11	4.25319E-09	4.31028E-09	0.0043103
397266.283767377.2	397266.28	3767377	4.2152E-06	4.2152E-06	0	0	0	0	1.68608E-05	1.68608E-05	0	0	5.71668E-11	4.25832E-09	4.31548E-09	0.0043155
397366.283767377.2	397366.28	3767377	4.02305E-06	4.02305E-06	0	0	0	0	1.60922E-05	1.60922E-05	0	0	5.45609E-11	4.0642E-09	4.11877E-09	0.0041188
397466.283767377.2	397466.28	3767377	3.62179E-06	3.62179E-06	0	0	0	0	1.44872E-05	1.44872E-05	0	0	4.91189E-11	3.65884E-09	3.70795E-09	0.003708
397566.283767377.2	397566.28	3767377	3.56251E-06	3.56251E-06	0	0	0	0	1.425E-05	1.425E-05	0	0	4.83149E-11	3.59895E-09	3.64726E-09	0.0036473
397666.283767377.2	397666.28	3767377	3.45794E-06	3.45794E-06	0	0	0	0	1.38317E-05	1.38317E-05	0	0	4.68967E-11	3.49331E-09	3.5402E-09	0.0035402
397766.283767377.2	397766.28	3767377	3.56871E-06	3.56871E-06	0	0	0	0	1.42749E-05	1.42749E-05	0	0	4.83991E-11	3.60522E-09	3.65362E-09	0.0036536
397866.283767377.2	397866.28	3767377	3.39922E-06	3.39922E-06	0	0	0	0	1.35969E-05	1.35969E-05	0	0	4.61004E-11	3.43399E-09	3.48009E-09	0.0034801
396166.283767477.2	396166.28	3767477	4.40759E-06	4.40759E-06	0	0	0	0	1.76304E-05	1.76304E-05	0	0	5.9776E-11	4.45268E-09	4.51245E-09	0.0045125
396266.283767477.2	396266.28	3767477	4.30668E-06	4.30668E-06	0	0	0	0	1.72267E-05	1.72267E-05	0	0	5.84075E-11	4.35074E-09	4.40914E-09	0.0044091
396366.283767477.2	396366.28	3767477	4.53722E-06	4.53722E-06	0	0	0	0	1.81489E-05	1.81489E-05	0	0	6.1534E-11	4.58363E-09	4.64516E-09	0.0046452
396466.283767477.2	396466.28	3767477	4.96939E-06	4.96939E-06	0	0	0	0	1.98776E-05	1.98776E-05	0	0	6.73951E-11	5.02022E-09	5.08762E-09	0.0050876
396566.283767477.2	396566.28	3767477	5.03692E-06	5.03692E-06	0	0	0	0	2.01477E-05	2.01477E-05	0	0	6.83109E-11	5.08844E-09	5.15675E-09	0.0051567
396666.283767477.2	396666.28	3767477	4.89066E-06	4.89066E-06	0	0	0	0	1.95626E-05	1.95626E-05	0	0	6.63274E-11	4.94069E-09	5.00701E-09	0.005007
396766.283767477.2	396766.28	3767477	4.92892E-06	4.92892E-06	0	0	0	0	1.97157E-05	1.97157E-05	0	0	6.68462E-11	4.97933E-09	5.04618E-09	0.0050462
396866.283767477.2	396866.28	3767477	4.9577E-06	4.9577E-06	0	0	0	0	1.98308E-05	1.98308E-05	0	0	6.72366E-11	5.00841E-09	5.07565E-09	0.0050756
396966.283767477.2	396966.28	3767477	5.0315E-06	5.0315E-06	0	0	0	0	2.0126E-05	2.0126E-05	0	0	6.82375E-11	5.08297E-09	5.1512E-09	0.0051512
397066.283767477.2	397066.28	3767477	4.93481E-06	4.93481E-06	0	0	0	0	1.97392E-05	1.97392E-05	0	0	6.69261E-11	4.98528E-09	5.05221E-09	0.0050522
397166.283767477.2	397166.28	3767477	4.77938E-06	4.77938E-06	0	0	0	0	1.91175E-05	1.91175E-05	0	0	6.48183E-11	4.82827E-09	4.89309E-09	0.0048931
397266.283767477.2	397266.28	3767477	4.79518E-06	4.79518E-06	0	0	0	0	1.91807E-05	1.91807E-05	0	0	6.50325E-11	4.84423E-09	4.90926E-09	0.0049093
397366.283767477.2	397366.28	3767477	4.65093E-06	4.65093E-06	0	0	0	0	1.86037E-05	1.86037E-05	0	0	6.30761E-11	4.6985E-09	4.76158E-09	0.0047616
397466.283767477.2	397466.28	3767477	4.19494E-06	4.19494E-06	0	0	0	0	1.67798E-05	1.67798E-05	0	0	5.6892E-11	4.23785E-09	4.29474E-09	0.0042947
397566.283767477.2	397566.28	3767477	3.9783E-06	3.9783E-06	0	0	0	0	1.59132E-05	1.59132E-05	0	0	5.3954E-11	4.019E-09	4.07295E-09	0.004073
397666.283767477.2	397666.28	3767477	3.89105E-06	3.89105E-06	0	0	0	0	1.55642E-05	1.55642E-05	0	0	5.27707E-11	3.93085E-09	3.98363E-09	0.0039836
397766.283767477.2	397766.28	3767477	3.79864E-06	3.79864E-06	0	0	0	0	1.51946E-05	1.51946E-05	0	0	5.15174E-11	3.8375E-09	3.88901E-09	0.003889
397866.283767477.2	397866.28	3767477	3.65582E-06	3.65582E-06	0	0	0	0	1.46233E-05	1.46233E-05	0	0	4.95804E-11	3.69321E-09	3.74279E-09	0.0037428
396166.283767577.2	396166.28	3767577	4.64617E-06	4.64617E-06	0	0	0	0	1.85847E-05	1.85847E-05	0	0	6.30116E-11	4.69369E-09	4.7567E-09	0.0047567
396266.283767577.2	396266.28	3767577	4.77621E-06	4.77621E-06	0	0	0	0	1.91048E-05	1.91048E-05	0	0	6.47752E-11	4.82507E-09	4.88984E-09	0.0048898
396366.283767577.2	396366.28	3767577	4.99528E-06	4.99528E-06	0	0	0	0	1.99811E-05	1.99811E-05	0	0	6.77463E-11	5.04638E-09	5.11412E-09	0.0051141
396466.283767577.2	396466.28	3767577	5.30423E-06	5.30423E-06	0	0	0	0	2.12169E-05	2.12169E-05	0	0	7.19363E-11	5.35849E-09	5.43042E-09	0.0054304
396566.283767577.2	396566.28	3767577	5.89209E-06	5.89209E-06	0	0	0	0	2.35684E-05	2.35684E-05	0	0	7.99089E-11	5.95236E-09	6.03227E-09	0.0060323
396666.283767577.2	396666.28	3767577	5.9828E-06	5.9828E-06	0	0	0	0	2.39312E-05	2.39312E-05	0	0	8.1139E-11	6.04399E-09	6.12513E-09	0.0061251
396766.283767577.2	396766.28	3767577	5.64161E-06	5.64161E-06	0	0	0	0	2.25665E-05	2.25665E-05	0	0	7.65119E-11	5.69932E-09	5.77583E-09	0.0057758
396866.283767577.2	396866.28	3767577	5.78386E-06	5.78386E-06	0	0	0	0	2.31354E-05	2.31354E-05	0	0	7.8441E-11	5.84302E-09	5.92146E-09	0.0059215

Garvey Reservoir Rehab - Unmitigated Reservoir Cover and Liner Work			Demolition - 2025	Demolition - 2026	Site Preparation - 2025	te Preparation - 202	Grading - 2025	Grading - 2026	Infrastructure - 2025	nfrastructure - 2026	Paving - 2025	rchitectural Coating - 202	Child Risk			
Unique Identifier	X (UTM)	Y (UTM)	2025	2026	1900	1900	1900	1900	2026	2027	1900	1900	3rd Trimester	0<2	Total	per million
396966.283767577.2	396966.28	3767577	5.86296E-06	5.86296E-06	0	0	0	0	2.34518E-05	2.34518E-05	0	0	7.95138E-11	5.92293E-09	6.00244E-09	0.0060024
397066.283767577.2	397066.28	3767577	5.86437E-06	5.86437E-06	0	0	0	0	2.34575E-05	2.34575E-05	0	0	7.95329E-11	5.92436E-09	6.00389E-09	0.0060039
397166.283767577.2	397166.28	3767577	5.64799E-06	5.64799E-06	0	0	0	0	2.2592E-05	2.2592E-05	0	0	7.65984E-11	5.70577E-09	5.78236E-09	0.0057824
397266.283767577.2	397266.28	3767577	5.57311E-06	5.57311E-06	0	0	0	0	2.22924E-05	2.22924E-05	0	0	7.55828E-11	5.63012E-09	5.7057E-09	0.0057057
397366.283767577.2	397366.28	3767577	5.43422E-06	5.43422E-06	0	0	0	0	2.17369E-05	2.17369E-05	0	0	7.36991E-11	5.4898E-09	5.5635E-09	0.0055635
397466.283767577.2	397466.28	3767577	4.84076E-06	4.84076E-06	0	0	0	0	1.9363E-05	1.9363E-05	0	0	6.56506E-11	4.89027E-09	4.95592E-09	0.0049559
397566.283767577.2	397566.28	3767577	4.56601E-06	4.56601E-06	0	0	0	0	1.8264E-05	1.8264E-05	0	0	6.19244E-11	4.61271E-09	4.67464E-09	0.0046746
397666.283767577.2	397666.28	3767577	4.31766E-06	4.31766E-06	0	0	0	0	1.72706E-05	1.72706E-05	0	0	5.85564E-11	4.36183E-09	4.42038E-09	0.0044204
397766.283767577.2	397766.28	3767577	4.15353E-06	4.15353E-06	0	0	0	0	1.66141E-05	1.66141E-05	0	0	5.63304E-11	4.19601E-09	4.25234E-09	0.0042523
397866.283767577.2	397866.28	3767577	3.94844E-06	3.94844E-06	0	0	0	0	1.57938E-05	1.57938E-05	0	0	5.3549E-11	3.98883E-09	4.04238E-09	0.0040424
396166.283767677.2	396166.28	3767677	5.62549E-06	5.62549E-06	0	0	0	0	2.25019E-05	2.25019E-05	0	0	7.62932E-11	5.68303E-09	5.75932E-09	0.0057593
396266.283767677.2	396266.28	3767677	5.32253E-06	5.32253E-06	0	0	0	0	2.12901E-05	2.12901E-05	0	0	7.21845E-11	5.37697E-09	5.44916E-09	0.0054492
396366.283767677.2	396366.28	3767677	5.67165E-06	5.67165E-06	0	0	0	0	2.26866E-05	2.26866E-05	0	0	7.69192E-11	5.72966E-09	5.80658E-09	0.0058066
396466.283767677.2	396466.28	3767677	6.70851E-06	6.70851E-06	0	0	0	0	2.6834E-05	2.6834E-05	0	0	9.09811E-11	6.77713E-09	6.86811E-09	0.0068681
396566.283767677.2	396566.28	3767677	6.76935E-06	6.76935E-06	0	0	0	0	2.70774E-05	2.70774E-05	0	0	9.18063E-11	6.8386E-09	6.9304E-09	0.0069304
396666.283767677.2	396666.28	3767677	6.34121E-06	6.34121E-06	0	0	0	0	2.53649E-05	2.53649E-05	0	0	8.59999E-11	6.40608E-09	6.49208E-09	0.0064921
396766.283767677.2	396766.28	3767677	6.60139E-06	6.60139E-06	0	0	0	0	2.64056E-05	2.64056E-05	0	0	8.95284E-11	6.66892E-09	6.75845E-09	0.0067584
396866.283767677.2	396866.28	3767677	6.97234E-06	6.97234E-06	0	0	0	0	2.78894E-05	2.78894E-05	0	0	9.45593E-11	7.04366E-09	7.13822E-09	0.0071382
396966.283767677.2	396966.28	3767677	7.04825E-06	7.04825E-06	0	0	0	0	2.8193E-05	2.8193E-05	0	0	9.55887E-11	7.12034E-09	7.21593E-09	0.0072159
397066.283767677.2	397066.28	3767677	7.02703E-06	7.02703E-06	0	0	0	0	2.81081E-05	2.81081E-05	0	0	9.5301E-11	7.09891E-09	7.19421E-09	0.0071942
397166.283767677.2	397166.28	3767677	6.87159E-06	6.87159E-06	0	0	0	0	2.74864E-05	2.74864E-05	0	0	9.31929E-11	6.94188E-09	7.03507E-09	0.0070351
397266.283767677.2	397266.28	3767677	6.30158E-06	6.30158E-06	0	0	0	0	2.52063E-05	2.52063E-05	0	0	8.54624E-11	6.36604E-09	6.4515E-09	0.0064515
397366.283767677.2	397366.28	3767677	6.41003E-06	6.41003E-06	0	0	0	0	2.56401E-05	2.56401E-05	0	0	8.69332E-11	6.4756E-09	6.56253E-09	0.0065625
397466.283767677.2	397466.28	3767677	5.51298E-06	5.51298E-06	0	0	0	0	2.20519E-05	2.20519E-05	0	0	7.47673E-11	5.56937E-09	5.64413E-09	0.0056441
397566.283767677.2	397566.28	3767677	5.28934E-06	5.28934E-06	0	0	0	0	2.11573E-05	2.11573E-05	0	0	7.17343E-11	5.34344E-09	5.41517E-09	0.0054152
397666.283767677.2	397666.28	3767677	4.98117E-06	4.98117E-06	0	0	0	0	1.99247E-05	1.99247E-05	0	0	6.75549E-11	5.03212E-09	5.09968E-09	0.0050997
397766.283767677.2	397766.28	3767677	4.64986E-06	4.64986E-06	0	0	0	0	1.85994E-05	1.85994E-05	0	0	6.30616E-11	4.69742E-09	4.76048E-09	0.0047605
397866.283767677.2	397866.28	3767677	4.42501E-06	4.42501E-06	0	0	0	0	1.77001E-05	1.77001E-05	0	0	6.00123E-11	4.47028E-09	4.53029E-09	0.0045303
396166.283767777.2	396166.28	3767777	6.31355E-06	6.31355E-06	0	0	0	0	2.52542E-05	2.52542E-05	0	0	8.56247E-11	6.37813E-09	6.46376E-09	0.0064638
396266.283767777.2	396266.28	3767777	7.17219E-06	7.17219E-06	0	0	0	0	2.86888E-05	2.86888E-05	0	0	9.72697E-11	7.24556E-09	7.34283E-09	0.0073428
396366.283767777.2	396366.28	3767777	6.98034E-06	6.98034E-06	0	0	0	0	2.79214E-05	2.79214E-05	0	0	9.46677E-11	7.05174E-09	7.14641E-09	0.0071464
396466.283767777.2	396466.28	3767777	7.36938E-06	7.36938E-06	0	0	0	0	2.94775E-05	2.94775E-05	0	0	9.9944E-11	7.44476E-09	7.54471E-09	0.0075447
396566.283767777.2	396566.28	3767777	6.97725E-06	6.97725E-06	0	0	0	0	2.7909E-05	2.7909E-05	0	0	9.46258E-11	7.04862E-09	7.14324E-09	0.0071432
396666.283767777.2	396666.28	3767777	7.33794E-06	7.33794E-06	0	0	0	0	2.93518E-05	2.93518E-05	0	0	9.95176E-11	7.413E-09	7.51252E-09	0.0075125
396766.283767777.2	396766.28	3767777	8.04307E-06	8.04307E-06	0	0	0	0	3.21723E-05	3.21723E-05	0	0	1.09081E-10	8.12534E-09	8.23442E-09	0.0082344
396866.283767777.2	396866.28	3767777	8.58934E-06	8.58934E-06	0	0	0	0	3.43574E-05	3.43574E-05	0	0	1.16489E-10	8.6772E-09	8.79369E-09	0.0087937
396966.283767777.2	396966.28	3767777	8.48403E-06	8.48403E-06	0	0	0	0	3.39361E-05	3.39361E-05	0	0	1.15061E-10	8.57081E-09	8.68587E-09	0.0086859
397066.283767777.2	397066.28	3767777	8.49567E-06	8.49567E-06	0	0	0	0	3.39827E-05	3.39827E-05	0	0	1.15219E-10	8.58257E-09	8.69779E-09	0.0086978
397166.283767777.2	397166.28	3767777	8.50727E-06	8.50727E-06	0	0	0	0	3.40291E-05	3.40291E-05	0	0	1.15376E-10	8.59429E-09	8.70967E-09	0.0087097
397266.283767777.2	397266.28	3767777	7.91515E-06	7.91515E-06	0	0	0	0	3.16606E-05	3.16606E-05	0	0	1.07346E-10	7.99611E-09	8.10345E-09	0.0081035
397366.283767777.2	397366.28	3767777	7.76167E-06	7.76167E-06	0	0	0	0	3.10467E-05	3.10467E-05	0	0	1.05264E-10	7.84106E-09	7.94632E-09	0.0079463
397466.283767777.2	397466.28	3767777	6.69808E-06	6.69808E-06	0	0	0	0	2.67923E-05	2.67923E-05	0	0	9.08398E-11	6.7666E-09	6.85743E-09	0.0068574
397566.283767777.2	397566.28	3767777	6.17864E-06	6.17864E-06	0	0	0	0	2.47146E-05	2.47146E-05	0	0	8.37951E-11	6.24184E-09	6.32564E-09	0.0063256
397666.283767777.2	397666.28	3767777	5.88008E-06	5.88008E-06	0	0	0	0	2.35203E-05	2.35203E-05	0	0	7.9746E-11	5.94023E-09	6.01998E-09	0.00602
397766.283767777.2	397766.28	3767777	5.25012E-06	5.25012E-06	0	0	0	0	2.10005E-05	2.10005E-05	0	0	7.12025E-11	5.30383E-09	5.37503E-09	0.005375
397866.283767777.2	397866.28	3767777	4.7865E-06	4.7865E-06	0	0	0	0	1.9146E-05	1.9146E-05	0	0	6.49148E-11	4.83547E-09	4.90038E-09	0.0049004
396166.283767877.2	396166.28	3767877	6.97761E-06	6.97761E-06	0	0	0	0	2.79105E-05	2.79105E-05	0	0	9.46308E-11	7.04899E-09	7.14362E-09	0.0071436
396266.283767877.2	396266.28	3767877	8.05927E-06	8.05927E-06	0	0	0	0	3.22371E-05	3.22371E-05	0	0	1.093E-10	8.1417E-09	8.251E-09	0.008251
396366.283767877.2	396366.28	3767877	8.5193E-06	8.5193E-06	0	0	0	0	3.40772E-05	3.40772E-05	0	0	1.15539E-10	8.60644E-09	8.72198E-09	0.008722
396466.283767877.2	396466.28	3767877	8.08394E-06	8.08394E-06	0	0	0	0	3.23358E-05	3.23358E-05	0	0	1.09635E-10	8.16663E-09	8.27627E-09	0.0082763
396566.283767877.2	396566.28	3767877	8.00101E-06	8.00101E-06	0	0	0	0	3.2004E-05	3.2004E-05	0	0	1.0851E-10	8.08285E-09	8.19136E-09	0.0081914
397466.283767877.2	397466.28	3767877	9.38054E-06	9.38054E-06	0	0	0	0	3.75222E-05	3.75222E-05	0	0	1.27219E-10	9.47649E-09	9.60371E-09	0.0096037
397566.283767877.2	397566.28	3767877	7.38854E-06	7.38854E-06	0	0	0	0	2.95542E-05	2.95542E-05	0	0	1.00204E-10	7.46412E-09	7.56432E-09	0.0075643
397666.283767877.2	397666.28	3767877	6.22835E-06	6.22835E-06	0	0	0	0	2.49134E-05	2.49134E-05	0	0	8.44692E-11	6.29206E-09	6.37653E-09	0.0063765
397766.283767877.2	397766.28	3767877	5.51313E-06	5.51313E-06	0	0	0	0	2.20525E-05	2.20525E-05	0	0	7.47694E-11	5.56953E-09	5.6443E-09	0.0056443
397866.283767877.2	397866.28	3767877	5.52227E-06	5.52227E-06	0	0	0	0	2.20891E-05	2.20891E-05	0	0	7.48934E-11	5.57876E-09	5.65365E-09	0.0056537
396166.283767977.2	396166.28	3767977	7.31371E-06	7.31371E-06	0	0	0	0	2.92548E-05	2.92548E-05	0	0	9.91889E-11	7.38852E-09	7.48771E-09	0.0074877
396266.283767977.2	396266.28	3767977	8.45174E-06	8.45174E-06	0	0	0	0	3.3807E-05	3.3807E-05	0	0	1.14623E-10	8.53819E-09	8.65282E-09	0.0086528
396366.283767977.2	396366.28	3767977	9.14145E-06	9.14145E-06	0	0	0	0	3.65658E-05	3.65658E-05	0	0	1.23977E-10	9.23496E-09	9.35894E-09	0.0093589
396466.283767977.2	396466.28	3767977	8.78313E-06	8.78313E-06	0	0	0	0	3.51325E-05	3.51325E-05	0	0	1.19117E-10	8.87297E-09	8.99209E-09	0.0089921
397466.283767977.2	397466.28	3767977	1.10631E-05	1.10631E-05	0	0	0	0	4.42525E-05	4.42525E-05	0	0	1.50039E-10	1.11763E-08	1.13263E-08	0.0113263
397566.283767977.2	397566.28	3767977	8.93416E-06	8.93416E-06	0	0	0	0	3.57366E-05	3.57366E-05	0	0	1.21166E-10	9.02554E-09	9.14671E-09	0.0091467
397666.283767977.2	397666.28	3767977	7.41573E-06	7.41573E-06	0	0	0	0	2.96629E-05	2.96629E-05	0	0	1.00573E-10	7.49159E-09	7.59216E-09	0.0075922
397766.283767977.2	397766.28	3767977	7.47003E-06	7.47003E-06	0	0	0	0	2.98801E-05	2.98801E-05	0	0	1.01309E-10	7.54644E-09	7.64775E-09	0.0076478
397866.283767977.2	397866.28	3767977	6.83119E-06	6.83119E-06	0	0	0	0	2.73248E-05	2.73248E-05	0	0	9.2645E-11	6.90107E-09	6.99371E-09	0.0069937
396166.283768077.2	396166.28	3768077	9.85953E-06	9.85953E-06	0	0	0	0	3.94381E-05	3.94381E-05	0	0	1.33715E-10	9.96038E-09	1.00941E-08	0.0100941
396266.283768077.2	396266.28	3768077	9.34415E-06	9.34415E-06	0	0	0	0	3.73766E-05	3.73766E-05	0	0	1.26726E-10	9.43973E-09	9.56646E-09	0.0095665
396366.283768077.2	396366.28	3768077	1.014E-05	1.014E-05	0	0	0	0	4.05602E-05	4.05602E-05	0	0	1.3752E-10	1.02438E-08	1.03813E-08	0.0103813
396466.283768077.2	396466.28	3768077	1.09769E-05	1.09769E-05	0	0	0	0	4.39075E-05	4.39075E-05	0	0	1.48869E-10	1.10892E-08	1.1238E-08	0.011238
397466.283768077.2	397466.28	3768077	1.91987E-05	1.91987E-05	0	0	0	0	7.67948E-05	7.67948E-05	0	0	2.60374E-10	1.93951E-08	1.96555E-08	0.0196555
397566.283768077.2	397566.28	3768077	1.51719E-05	1.51719E-05	0	0	0	0	6.06878E-05	6.06878E-05	0	0	2.05763E-10	1.53271E-08	1.55329E-08	0.0155329

Garvey Reservoir Rehab - Unmitigated Reservoir Cover and Liner Work			Demolition - 2025	Demolition - 2026	Site Preparation - 2025	te Preparation - 202	Grading - 2025	Grading - 2026	Infrastructure - 2025	nfrastructure - 2026	Paving - 2025	rchitectural Coating - 202	Child Risk			
Unique Identifier	X (UTM)	Y (UTM)	2025	2026	1900	1900	1900	1900	2026	2027	1900	1900	3rd Trimester	0<2	Total	per million
397666.283768077.2	397666.28	3768077	1.13827E-05	1.13827E-05	0	0	0	0	4.55308E-05	4.55308E-05	0	0	1.54373E-10	1.14991E-08	1.16535E-08	0.0116535
397766.283768077.2	397766.28	3768077	8.88752E-06	8.88752E-06	0	0	0	0	3.55501E-05	3.55501E-05	0	0	1.20533E-10	8.97843E-09	9.09896E-09	0.009099
397866.283768077.2	397866.28	3768077	7.70344E-06	7.70344E-06	0	0	0	0	3.08138E-05	3.08138E-05	0	0	1.04474E-10	7.78224E-09	7.88671E-09	0.0078867
396166.283768177.2	396166.28	3768177	1.18911E-05	1.18911E-05	0	0	0	0	4.75642E-05	4.75642E-05	0	0	1.61267E-10	1.20127E-08	1.2174E-08	0.012174
396266.283768177.2	396266.28	3768177	1.22816E-05	1.22816E-05	0	0	0	0	4.91265E-05	4.91265E-05	0	0	1.66564E-10	1.24073E-08	1.25738E-08	0.0125738
396366.283768177.2	396366.28	3768177	1.337E-05	1.337E-05	0	0	0	0	5.348E-05	5.348E-05	0	0	1.81325E-10	1.35068E-08	1.36881E-08	0.0136881
396466.283768177.2	396466.28	3768177	1.31649E-05	1.31649E-05	0	0	0	0	5.26595E-05	5.26595E-05	0	0	1.78543E-10	1.32995E-08	1.34781E-08	0.0134781
397466.283768177.2	397466.28	3768177	4.19871E-05	4.19871E-05	0	0	0	0	0.000167948	0.000167948	0	0	5.69432E-10	4.24166E-08	4.2986E-08	0.042986
397566.283768177.2	397566.28	3768177	2.20253E-05	2.20253E-05	0	0	0	0	8.81012E-05	8.81012E-05	0	0	2.98708E-10	2.22506E-08	2.25493E-08	0.0225493
397666.283768177.2	397666.28	3768177	1.50304E-05	1.50304E-05	0	0	0	0	6.01216E-05	6.01216E-05	0	0	2.03843E-10	1.51842E-08	1.5388E-08	0.015388
397766.283768177.2	397766.28	3768177	1.10837E-05	1.10837E-05	0	0	0	0	4.4335E-05	4.4335E-05	0	0	1.50318E-10	1.11971E-08	1.13474E-08	0.0113474
397866.283768177.2	397866.28	3768177	9.09468E-06	9.09468E-06	0	0	0	0	3.63787E-05	3.63787E-05	0	0	1.23343E-10	9.18771E-09	9.31105E-09	0.009311
396166.283768277.2	396166.28	3768277	1.41424E-05	1.41424E-05	0	0	0	0	5.65695E-05	5.65695E-05	0	0	1.918E-10	1.4287E-08	1.44788E-08	0.0144788
396266.283768277.2	396266.28	3768277	1.39172E-05	1.39172E-05	0	0	0	0	5.56687E-05	5.56687E-05	0	0	1.88746E-10	1.40595E-08	1.42483E-08	0.0142483
396366.283768277.2	396366.28	3768277	1.56228E-05	1.56228E-05	0	0	0	0	6.24911E-05	6.24911E-05	0	0	2.11877E-10	1.57826E-08	1.59945E-08	0.0159945
396466.283768277.2	396466.28	3768277	1.61667E-05	1.61667E-05	0	0	0	0	6.46669E-05	6.46669E-05	0	0	2.19254E-10	1.63321E-08	1.65513E-08	0.0165513
397366.283768277.2	397366.28	3768277	0.000333703	0.000333703	0	0	0	0	0.001334813	0.001334813	0	0	4.5257E-09	3.37117E-07	3.41642E-07	0.3416423
397466.283768277.2	397466.28	3768277	6.55061E-05	6.55061E-05	0	0	0	0	0.000262024	0.000262024	0	0	8.88398E-10	6.61762E-08	6.70646E-08	0.0670646
397566.283768277.2	397566.28	3768277	2.99056E-05	2.99056E-05	0	0	0	0	0.000119622	0.000119622	0	0	4.05581E-10	3.02115E-08	3.06171E-08	0.0306171
397666.283768277.2	397666.28	3768277	1.87384E-05	1.87384E-05	0	0	0	0	7.49535E-05	7.49535E-05	0	0	2.54131E-10	1.89301E-08	1.91842E-08	0.0191842
397766.283768277.2	397766.28	3768277	1.3423E-05	1.3423E-05	0	0	0	0	5.36921E-05	5.36921E-05	0	0	1.82044E-10	1.35603E-08	1.37424E-08	0.0137424
397866.283768277.2	397866.28	3768277	1.03337E-05	1.03337E-05	0	0	0	0	4.13347E-05	4.13347E-05	0	0	1.40146E-10	1.04394E-08	1.05795E-08	0.0105795
396166.283768377.2	396166.28	3768377	1.6667E-05	1.6667E-05	0	0	0	0	6.66679E-05	6.66679E-05	0	0	2.26038E-10	1.68375E-08	1.70635E-08	0.0170635
396266.283768377.2	396266.28	3768377	1.73546E-05	1.73546E-05	0	0	0	0	6.94184E-05	6.94184E-05	0	0	2.35364E-10	1.75321E-08	1.77675E-08	0.0177675
396366.283768377.2	396366.28	3768377	1.93763E-05	1.93763E-05	0	0	0	0	7.75053E-05	7.75053E-05	0	0	2.62783E-10	1.95745E-08	1.98373E-08	0.0198373
396466.283768377.2	396466.28	3768377	2.09048E-05	2.09048E-05	0	0	0	0	8.36192E-05	8.36192E-05	0	0	2.83512E-10	2.11186E-08	2.14021E-08	0.0214021
397266.283768377.2	397266.28	3768377	0.000523875	0.000523875	0	0	0	0	0.002095499	0.002095499	0	0	7.10482E-09	5.29233E-07	5.36338E-07	0.5363383
397366.283768377.2	397366.28	3768377	0.000235623	0.000235623	0	0	0	0	0.000942491	0.000942491	0	0	3.19553E-09	2.38033E-07	2.41229E-07	0.2412285
397466.283768377.2	397466.28	3768377	7.603E-05	7.603E-05	0	0	0	0	0.00030412	0.00030412	0	0	1.03112E-09	7.68077E-08	7.78388E-08	0.0778388
397566.283768377.2	397566.28	3768377	3.65004E-05	3.65004E-05	0	0	0	0	0.000146002	0.000146002	0	0	4.95021E-10	3.68738E-08	3.73688E-08	0.0373688
397666.283768377.2	397666.28	3768377	2.21244E-05	2.21244E-05	0	0	0	0	8.84976E-05	8.84976E-05	0	0	3.00052E-10	2.23507E-08	2.26508E-08	0.0226508
397766.283768377.2	397766.28	3768377	1.55538E-05	1.55538E-05	0	0	0	0	6.22152E-05	6.22152E-05	0	0	2.10942E-10	1.57129E-08	1.59239E-08	0.0159239
397866.283768377.2	397866.28	3768377	1.11884E-05	1.11884E-05	0	0	0	0	4.47537E-05	4.47537E-05	0	0	1.51738E-10	1.13029E-08	1.14546E-08	0.0114546
396166.283768477.2	396166.28	3768477	2.04481E-05	2.04481E-05	0	0	0	0	8.17925E-05	8.17925E-05	0	0	2.77319E-10	2.06573E-08	2.09346E-08	0.0209346
396266.283768477.2	396266.28	3768477	2.20367E-05	2.20367E-05	0	0	0	0	8.8147E-05	8.8147E-05	0	0	2.98864E-10	2.22622E-08	2.2561E-08	0.022561
396366.283768477.2	396366.28	3768477	2.44257E-05	2.44257E-05	0	0	0	0	9.77028E-05	9.77028E-05	0	0	3.31263E-10	2.46756E-08	2.50068E-08	0.0250068
396466.283768477.2	396466.28	3768477	2.73511E-05	2.73511E-05	0	0	0	0	0.000109405	0.000109405	0	0	3.70938E-10	2.76309E-08	2.80018E-08	0.0280018
397166.283768477.2	397166.28	3768477	9.73672E-05	9.73672E-05	0	0	0	0	0.000389469	0.000389469	0	0	1.3205E-09	9.83632E-08	9.96837E-08	0.0996837
397266.283768477.2	397266.28	3768477	0.000531762	0.000531762	0	0	0	0	0.002127047	0.002127047	0	0	7.21178E-09	5.37201E-07	5.44413E-07	0.5444129
397366.283768477.2	397366.28	3768477	0.000215441	0.000215441	0	0	0	0	0.000861764	0.000861764	0	0	2.92182E-09	2.17645E-07	2.20566E-07	0.2205665
397466.283768477.2	397466.28	3768477	7.00666E-05	7.00666E-05	0	0	0	0	0.000280266	0.000280266	0	0	9.50247E-10	7.07833E-08	7.17335E-08	0.0717335
397566.283768477.2	397566.28	3768477	4.18824E-05	4.18824E-05	0	0	0	0	0.00016753	0.00016753	0	0	5.68011E-10	4.23108E-08	4.28788E-08	0.0428788
397666.283768477.2	397666.28	3768477	2.59892E-05	2.59892E-05	0	0	0	0	0.000103957	0.000103957	0	0	3.52467E-10	2.6255E-08	2.66075E-08	0.0266075
397766.283768477.2	397766.28	3768477	1.64422E-05	1.64422E-05	0	0	0	0	6.57689E-05	6.57689E-05	0	0	2.22991E-10	1.66104E-08	1.68334E-08	0.0168334
397866.283768477.2	397866.28	3768477	1.28178E-05	1.28178E-05	0	0	0	0	5.12712E-05	5.12712E-05	0	0	1.73836E-10	1.29489E-08	1.31227E-08	0.0131227
396166.283768577.2	396166.28	3768577	2.60193E-05	2.60193E-05	0	0	0	0	0.000104077	0.000104077	0	0	3.52875E-10	2.62854E-08	2.66383E-08	0.0266383
396266.283768577.2	396266.28	3768577	2.93301E-05	2.93301E-05	0	0	0	0	0.00011732	0.00011732	0	0	3.97777E-10	2.96301E-08	3.00279E-08	0.0300279
396366.283768577.2	396366.28	3768577	3.16434E-05	3.16434E-05	0	0	0	0	0.000126574	0.000126574	0	0	4.2915E-10	3.19671E-08	3.23963E-08	0.0323963
396466.283768577.2	396466.28	3768577	3.79976E-05	3.79976E-05	0	0	0	0	0.00015199	0.00015199	0	0	5.15326E-10	3.83863E-08	3.89016E-08	0.0389016
396566.283768577.2	396566.28	3768577	3.72132E-05	3.72132E-05	0	0	0	0	0.000148853	0.000148853	0	0	5.04687E-10	3.75938E-08	3.80985E-08	0.0380985
396866.283768577.2	396866.28	3768577	4.76217E-05	4.76217E-05	0	0	0	0	0.000190487	0.000190487	0	0	6.45848E-10	4.81088E-08	4.87547E-08	0.0487547
396966.283768577.2	396966.28	3768577	5.52952E-05	5.52952E-05	0	0	0	0	0.000221181	0.000221181	0	0	7.49917E-10	5.58608E-08	5.66107E-08	0.0566107
397066.283768577.2	397066.28	3768577	6.83391E-05	6.83391E-05	0	0	0	0	0.000273356	0.000273356	0	0	9.26819E-10	6.90381E-08	6.9965E-08	0.069965
397166.283768577.2	397166.28	3768577	0.000117007	0.000117007	0	0	0	0	0.000468027	0.000468027	0	0	1.58685E-09	1.18204E-07	1.1979E-07	0.1197905
397266.283768577.2	397266.28	3768577	0.000515848	0.000515848	0	0	0	0	0.002063391	0.002063391	0	0	6.99596E-09	5.21124E-07	5.2812E-07	0.5281204
397366.283768577.2	397366.28	3768577	0.000216068	0.000216068	0	0	0	0	0.00086427	0.00086427	0	0	2.93032E-09	2.18278E-07	2.21208E-07	0.2212081
397466.283768577.2	397466.28	3768577	6.92328E-05	6.92328E-05	0	0	0	0	0.000276931	0.000276931	0	0	9.38939E-10	6.9941E-08	7.08799E-08	0.0708799
397566.283768577.2	397566.28	3768577	4.14429E-05	4.14429E-05	0	0	0	0	0.000165772	0.000165772	0	0	5.62051E-10	4.18668E-08	4.24289E-08	0.0424289
397666.283768577.2	397666.28	3768577	2.75516E-05	2.75516E-05	0	0	0	0	0.000110207	0.000110207	0	0	3.73657E-10	2.78335E-08	2.82071E-08	0.0282071
397766.283768577.2	397766.28	3768577	1.96067E-05	1.96067E-05	0	0	0	0	7.84267E-05	7.84267E-05	0	0	2.65907E-10	1.98072E-08	2.00731E-08	0.0200731
397866.283768577.2	397866.28	3768577	1.43156E-05	1.43156E-05	0	0	0	0	5.72625E-05	5.72625E-05	0	0	1.94149E-10	1.44621E-08	1.46562E-08	0.0146562
396166.283768677.2	396166.28	3768677	4.57094E-05	4.57094E-05	0	0	0	0	0.000182838	0.000182838	0	0	6.19913E-10	4.61769E-08	4.67969E-08	0.0467969
396266.283768677.2	396266.28	3768677	5.21859E-05	5.21859E-05	0	0	0	0	0.000208744	0.000208744	0	0	7.07749E-10	5.27197E-08	5.34275E-08	0.0534275
396366.283768677.2	396366.28	3768677	5.06731E-05	5.06731E-05	0	0	0	0	0.000202692	0.000202692	0	0	6.87231E-10	5.11914E-08	5.18787E-08	0.0518787
396466.283768677.2	396466.28	3768677	6.22106E-05	6.22106E-05	0	0	0	0	0.000248842	0.000248842	0	0	8.43704E-10	6.28469E-08	6.36907E-08	0.0636907
396566.283768677.2	396566.28	3768677	6.28893E-05	6.28893E-05	0	0	0	0	0.000251557	0.000251557	0	0	8.52909E-10	6.35326E-08	6.43855E-08	0.0643855
396666.283768677.2	396666.28	3768677	6.42071E-05	6.42071E-05	0	0	0	0	0.000256828	0.000256828	0	0	8.7078E-10	6.48638E-08	6.57346E-08	0.0657346
396766.283768677.2	396766.28	3768677	6.66299E-05	6.66299E-05	0	0	0	0	0.00026652	0.00026652	0	0	9.03639E-10	6.73115E-08	6.82151E-08	0.0682151
396866.283768677.2	396866.28	3768677	7.3998E-05	7.3998E-05	0	0	0	0	0.000295992	0.000295992	0	0	1.00356E-09	7.47549E-08	7.57585E-08	0.0757585
396966.283768677.2	396966.28	3768677	8.09988E-05	8.09988E-05	0	0	0	0	0.000323995	0.000323995	0	0	1.09851E-09	8.18273E-08	8.29258E-08	0.0829258
397066.283768677.2	397066.28	3768677	9.39578E-05	9.39578E-05	0	0	0	0	0.000375831	0.000375831	0	0	1.27426E-09	9.49189E-08	9.61931E-08	0.0961931

Garvey Reservoir Rehab - Unmitigated Reservoir Cover and Liner Work			Demolition - 2025	Demolition - 2026	Site Preparation - 2025	ite Preparation - 202	Grading - 2025	Grading - 2026	Infrastructure - 2025	nfrastructure - 2026	Paving - 2025	rchitectural Coating - 202	Child Risk			
Unique Identifier	X (UTM)	Y (UTM)	2025	2026	1900	1900	1900	1900	2026	2027	1900	1900	3rd Trimester	0<2	Total	per million
397166.283768677.2	397166.28	3768677	0.000147469	0.000147469	0	0	0	0	0.000589875	0.000589875	0	0	1.99998E-09	1.48977E-07	1.50977E-07	0.1509771
397366.283768677.2	397366.28	3768677	0.000196102	0.000196102	0	0	0	0	0.000784408	0.000784408	0	0	2.65955E-09	1.98108E-07	2.00767E-07	0.2007674
397466.283768677.2	397466.28	3768677	7.90103E-05	7.90103E-05	0	0	0	0	0.000316041	0.000316041	0	0	1.07154E-09	7.98185E-08	8.08901E-08	0.0808901
397566.283768677.2	397566.28	3768677	4.30868E-05	4.30868E-05	0	0	0	0	0.000172347	0.000172347	0	0	5.84345E-10	4.35275E-08	4.41118E-08	0.0441118
397666.283768677.2	397666.28	3768677	2.82298E-05	2.82298E-05	0	0	0	0	0.000112919	0.000112919	0	0	3.82854E-10	2.85185E-08	2.89014E-08	0.0289014
397766.283768677.2	397766.28	3768677	2.08218E-05	2.08218E-05	0	0	0	0	8.32872E-05	8.32872E-05	0	0	2.82386E-10	2.10348E-08	2.13172E-08	0.0213172
397866.283768677.2	397866.28	3768677	1.52892E-05	1.52892E-05	0	0	0	0	6.11569E-05	6.11569E-05	0	0	2.07353E-10	1.54456E-08	1.5653E-08	0.015653
396166.283768777.2	396166.28	3768777	0.000132727	0.000132727	0	0	0	0	0.000530908	0.000530908	0	0	1.80005E-09	1.34085E-07	1.35885E-07	0.1358847
396266.283768777.2	396266.28	3768777	0.000164923	0.000164923	0	0	0	0	0.000659691	0.000659691	0	0	2.23669E-09	1.6661E-07	1.68846E-07	0.1688464
396366.283768777.2	396366.28	3768777	0.000120907	0.000120907	0	0	0	0	0.000483627	0.000483627	0	0	1.63975E-09	1.22144E-07	1.23783E-07	0.1237834
396466.283768777.2	396466.28	3768777	0.000157991	0.000157991	0	0	0	0	0.000631966	0.000631966	0	0	2.14269E-09	1.59608E-07	1.6175E-07	0.1617502
396566.283768777.2	396566.28	3768777	0.000169188	0.000169188	0	0	0	0	0.000676751	0.000676751	0	0	2.29453E-09	1.70918E-07	1.73213E-07	0.1732129
396666.283768777.2	396666.28	3768777	0.000169128	0.000169128	0	0	0	0	0.000676514	0.000676514	0	0	2.29373E-09	1.70858E-07	1.73152E-07	0.1731522
396766.283768777.2	396766.28	3768777	0.000174954	0.000174954	0	0	0	0	0.000699818	0.000699818	0	0	2.37274E-09	1.76744E-07	1.79117E-07	0.1791168
396866.283768777.2	396866.28	3768777	0.000181896	0.000181896	0	0	0	0	0.000727583	0.000727583	0	0	2.46688E-09	1.83756E-07	1.86223E-07	0.1862232
396966.283768777.2	396966.28	3768777	0.000186382	0.000186382	0	0	0	0	0.000745526	0.000745526	0	0	2.52772E-09	1.88288E-07	1.90816E-07	0.1908157
397066.283768777.2	397066.28	3768777	0.000200791	0.000200791	0	0	0	0	0.000803166	0.000803166	0	0	2.72314E-09	2.02845E-07	2.05568E-07	0.2055684
397166.283768777.2	397166.28	3768777	0.000241802	0.000241802	0	0	0	0	0.00096721	0.00096721	0	0	3.27934E-09	2.44276E-07	2.47555E-07	0.2475551
397266.283768777.2	397266.28	3768777	0.000771231	0.000771231	0	0	0	0	0.003084923	0.003084923	0	0	1.04595E-08	7.7912E-07	7.89579E-07	0.789579
397366.283768777.2	397366.28	3768777	0.000267969	0.000267969	0	0	0	0	0.001071875	0.001071875	0	0	3.63421E-09	2.7071E-07	2.74344E-07	0.2743441
397466.283768777.2	397466.28	3768777	9.42505E-05	9.42505E-05	0	0	0	0	0.000377002	0.000377002	0	0	1.27823E-09	9.52146E-08	9.64928E-08	0.0964928
397566.283768777.2	397566.28	3768777	5.0549E-05	5.0549E-05	0	0	0	0	0.000202196	0.000202196	0	0	6.85549E-10	5.10661E-08	5.17516E-08	0.0517516
397666.283768777.2	397666.28	3768777	3.17912E-05	3.17912E-05	0	0	0	0	0.000127165	0.000127165	0	0	4.31155E-10	3.21164E-08	3.25476E-08	0.0325476
397766.283768777.2	397766.28	3768777	2.17646E-05	2.17646E-05	0	0	0	0	8.70586E-05	8.70586E-05	0	0	2.95173E-10	2.19873E-08	2.22824E-08	0.0222824
397866.283768777.2	397866.28	3768777	1.58433E-05	1.58433E-05	0	0	0	0	6.33731E-05	6.33731E-05	0	0	2.14867E-10	1.60053E-08	1.62202E-08	0.0162202
396166.283768877.2	396166.28	3768877	0.000534373	0.000534373	0	0	0	0	0.002137491	0.002137491	0	0	7.24719E-09	5.39839E-07	5.47086E-07	0.547086
396266.283768877.2	396266.28	3768877	0.000688214	0.000688214	0	0	0	0	0.002752856	0.002752856	0	0	9.3336E-09	6.95254E-07	7.04587E-07	0.7045872
396366.283768877.2	396366.28	3768877	0.000673899	0.000673899	0	0	0	0	0.002695596	0.002695596	0	0	9.13946E-09	6.80792E-07	6.89932E-07	0.6899317
396466.283768877.2	396466.28	3768877	0.000742351	0.000742351	0	0	0	0	0.002969405	0.002969405	0	0	1.00678E-08	7.49945E-07	7.60013E-07	0.7600126
396566.283768877.2	396566.28	3768877	0.00070014	0.00070014	0	0	0	0	0.002800561	0.002800561	0	0	9.49534E-09	7.07302E-07	7.16797E-07	0.7167973
396666.283768877.2	396666.28	3768877	0.000760661	0.000760661	0	0	0	0	0.003042646	0.003042646	0	0	1.03161E-08	7.68442E-07	7.78758E-07	0.7787583
396766.283768877.2	396766.28	3768877	0.000736205	0.000736205	0	0	0	0	0.002944819	0.002944819	0	0	9.98445E-09	7.43735E-07	7.5372E-07	0.7537198
396866.283768877.2	396866.28	3768877	0.000715148	0.000715148	0	0	0	0	0.002860592	0.002860592	0	0	9.69888E-09	7.22463E-07	7.32162E-07	0.7321622
396966.283768877.2	396966.28	3768877	0.000687674	0.000687674	0	0	0	0	0.002750696	0.002750696	0	0	9.32627E-09	6.94708E-07	7.04034E-07	0.7040344
397066.283768877.2	397066.28	3768877	0.000695221	0.000695221	0	0	0	0	0.002780886	0.002780886	0	0	9.42863E-09	7.02333E-07	7.11761E-07	0.7117615
397166.283768877.2	397166.28	3768877	0.000714546	0.000714546	0	0	0	0	0.002858185	0.002858185	0	0	9.69072E-09	7.21855E-07	7.31546E-07	0.731546
397266.283768877.2	397266.28	3768877	0.000750688	0.000750688	0	0	0	0	0.003002753	0.003002753	0	0	1.01809E-08	7.58367E-07	7.68548E-07	0.768548
397366.283768877.2	397366.28	3768877	0.000369107	0.000369107	0	0	0	0	0.001476427	0.001476427	0	0	5.00585E-09	3.72882E-07	3.77888E-07	0.3778882
397466.283768877.2	397466.28	3768877	9.87798E-05	9.87798E-05	0	0	0	0	0.000395119	0.000395119	0	0	1.33966E-09	9.97902E-08	1.0113E-07	0.1011299
397566.283768877.2	397566.28	3768877	5.05103E-05	5.05103E-05	0	0	0	0	0.000202041	0.000202041	0	0	6.85024E-10	5.1027E-08	5.1712E-08	0.051712
397666.283768877.2	397666.28	3768877	3.1331E-05	3.1331E-05	0	0	0	0	0.000125324	0.000125324	0	0	4.24913E-10	3.16515E-08	3.20764E-08	0.0320764
397766.283768877.2	397766.28	3768877	2.16575E-05	2.16575E-05	0	0	0	0	8.66298E-05	8.66298E-05	0	0	2.9372E-10	2.1879E-08	2.21727E-08	0.0221727
397866.283768877.2	397866.28	3768877	1.60291E-05	1.60291E-05	0	0	0	0	6.41163E-05	6.41163E-05	0	0	2.17387E-10	1.6193E-08	1.64104E-08	0.0164104
3964253767739	396425	3767739	7.20397E-06	7.20397E-06	0	0	0	0	2.88159E-05	2.88159E-05	0	0	9.77007E-11	7.27766E-09	7.37536E-09	0.0073754
3964753767739	396475	3767739	7.37609E-06	7.37609E-06	0	0	0	0	2.95043E-05	2.95043E-05	0	0	1.00035E-10	7.45154E-09	7.55157E-09	0.0075516
3965253767739	396525	3767739	6.87507E-06	6.87507E-06	0	0	0	0	2.75003E-05	2.75003E-05	0	0	9.32401E-11	6.9454E-09	7.03864E-09	0.0070386
3965753767739	396575	3767739	7.07382E-06	7.07382E-06	0	0	0	0	2.82953E-05	2.82953E-05	0	0	9.59355E-11	7.14618E-09	7.24211E-09	0.0072421
3966253767739	396625	3767739	6.79381E-06	6.79381E-06	0	0	0	0	2.71752E-05	2.71752E-05	0	0	9.2138E-11	6.8633E-09	6.95544E-09	0.0069554
3966753767739	396675	3767739	6.95207E-06	6.95207E-06	0	0	0	0	2.78083E-05	2.78083E-05	0	0	9.42844E-11	7.02318E-09	7.11747E-09	0.0071175
3967253767739	396725	3767739	7.26558E-06	7.26558E-06	0	0	0	0	2.90623E-05	2.90623E-05	0	0	9.85362E-11	7.3399E-09	7.43844E-09	0.0074384
3967753767739	396775	3767739	7.32665E-06	7.32665E-06	0	0	0	0	2.93066E-05	2.93066E-05	0	0	9.93644E-11	7.40159E-09	7.50096E-09	0.007501
3968253767739	396825	3767739	7.73952E-06	7.73952E-06	0	0	0	0	3.09581E-05	3.09581E-05	0	0	1.04964E-10	7.81869E-09	7.92365E-09	0.0079237
3968753767739	396875	3767739	7.96493E-06	7.96493E-06	0	0	0	0	3.18597E-05	3.18597E-05	0	0	1.08021E-10	8.0464E-09	8.15442E-09	0.0081544
3969253767739	396925	3767739	7.94294E-06	7.94294E-06	0	0	0	0	3.17717E-05	3.17717E-05	0	0	1.07723E-10	8.02418E-09	8.13191E-09	0.0081319
3969753767739	396975	3767739	7.89019E-06	7.89019E-06	0	0	0	0	3.15608E-05	3.15608E-05	0	0	1.07007E-10	7.9709E-09	8.07791E-09	0.0080779
3970253767739	397025	3767739	7.85697E-06	7.85697E-06	0	0	0	0	3.14279E-05	3.14279E-05	0	0	1.06557E-10	7.93734E-09	8.04389E-09	0.0080439
3970753767739	397075	3767739	7.89709E-06	7.89709E-06	0	0	0	0	3.15883E-05	3.15883E-05	0	0	1.07101E-10	7.97786E-09	8.08497E-09	0.008085
3971253767739	397125	3767739	7.90673E-06	7.90673E-06	0	0	0	0	3.16269E-05	3.16269E-05	0	0	1.07232E-10	7.98761E-09	8.09484E-09	0.0080948
3971753767739	397175	3767739	7.80276E-06	7.80276E-06	0	0	0	0	3.1211E-05	3.1211E-05	0	0	1.05821E-10	7.88258E-09	7.9884E-09	0.0079884
3972253767739	397225	3767739	7.63719E-06	7.63719E-06	0	0	0	0	3.05487E-05	3.05487E-05	0	0	1.03576E-10	7.71531E-09	7.81888E-09	0.0078189
3972753767739	397275	3767739	7.20278E-06	7.20278E-06	0	0	0	0	2.88111E-05	2.88111E-05	0	0	9.76845E-11	7.27645E-09	7.37414E-09	0.0073741
3973253767739	397325	3767739	7.20566E-06	7.20566E-06	0	0	0	0	2.88226E-05	2.88226E-05	0	0	9.77236E-11	7.27937E-09	7.37709E-09	0.0073771
3973753767739	397375	3767739	7.18178E-06	7.18178E-06	0	0	0	0	2.87271E-05	2.87271E-05	0	0	9.73997E-11	7.25524E-09	7.35264E-09	0.0073526
3974253767739	397425	3767739	6.98887E-06	6.98887E-06	0	0	0	0	2.79555E-05	2.79555E-05	0	0	9.47834E-11	7.06035E-09	7.15514E-09	0.0071551
3974753767739	397475	3767739	6.17468E-06	6.17468E-06	0	0	0	0	2.46987E-05	2.46987E-05	0	0	8.37413E-11	6.23784E-09	6.32158E-09	0.0063216
3975253767739	397525	3767739	5.96908E-06	5.96908E-06	0	0	0	0	2.38763E-05	2.38763E-05	0	0	8.0953E-11	6.03013E-09	6.11109E-09	0.0061111
3964253767789	396425	3767789	7.6955E-06	7.6955E-06	0	0	0	0	3.0782E-05	3.0782E-05	0	0	1.04367E-10	7.77422E-09	7.87858E-09	0.0078786
3964753767789	396475	3767789	7.41389E-06	7.41389E-06	0	0	0	0	2.96556E-05	2.96556E-05	0	0	1.00548E-10	7.48973E-09	7.59028E-09	0.0075903
3965253767789	396525	3767789	7.02164E-06	7.02164E-06	0	0	0	0	2.80866E-05	2.80866E-05	0	0	9.52279E-11	7.09347E-09	7.18869E-09	0.0071887
3965753767789	396575	3767789	7.10663E-06	7.10663E-06	0	0	0	0	2.84265E-05	2.84265E-05	0	0	9.63805E-11	7.17932E-09	7.2757E-09	0.0072757
3966253767789	396625	3767789	7.29373E-06	7.29373E-06	0	0	0	0	2.91749E-05	2.91749E-05	0	0	9.8918E-11	7.36834E-09	7.46726E-09	0.0074673

Garvey Reservoir Rehab - Unmitigated Reservoir Cover and Liner Work			Demolition - 2025	Demolition - 2026	Site Preparation - 2025	te Preparation - 202	Grading - 2025	Grading - 2026	Infrastructure - 2025	nfrastructure - 2026	Paving - 2025	rchitectural Coating - 202	Child Risk			
Unique Identifier	X (UTM)	Y (UTM)	2025	2026	1900	1900	1900	1900	2026	2027	1900	1900	3rd Trimester	0<2	Total	per million
3966753767789	396675	3767789	7.51273E-06	7.51273E-06	0	0	0	0	3.00509E-05	3.00509E-05	0	0	1.01888E-10	7.58958E-09	7.69147E-09	0.0076915
3967253767789	396725	3767789	8.10376E-06	8.10376E-06	0	0	0	0	3.24151E-05	3.24151E-05	0	0	1.09904E-10	8.18666E-09	8.29656E-09	0.0082966
3967753767789	396775	3767789	8.30081E-06	8.30081E-06	0	0	0	0	3.32032E-05	3.32032E-05	0	0	1.12576E-10	8.38572E-09	8.49829E-09	0.0084983
3968253767789	396825	3767789	8.67271E-06	8.67271E-06	0	0	0	0	3.46908E-05	3.46908E-05	0	0	1.1762E-10	8.76143E-09	8.87904E-09	0.008879
3968753767789	396875	3767789	8.79661E-06	8.79661E-06	0	0	0	0	3.51864E-05	3.51864E-05	0	0	1.193E-10	8.88659E-09	9.00589E-09	0.0090059
3969253767789	396925	3767789	8.79264E-06	8.79264E-06	0	0	0	0	3.51706E-05	3.51706E-05	0	0	1.19246E-10	8.88258E-09	9.00182E-09	0.0090018
3969753767789	396975	3767789	8.68443E-06	8.68443E-06	0	0	0	0	3.47377E-05	3.47377E-05	0	0	1.17779E-10	8.77326E-09	8.89104E-09	0.008891
3970253767789	397025	3767789	8.63588E-06	8.63588E-06	0	0	0	0	3.45435E-05	3.45435E-05	0	0	1.1712E-10	8.72422E-09	8.84134E-09	0.0088413
3970753767789	397075	3767789	8.71677E-06	8.71677E-06	0	0	0	0	3.48671E-05	3.48671E-05	0	0	1.18217E-10	8.80593E-09	8.92415E-09	0.0089241
3971253767789	397125	3767789	8.77979E-06	8.77979E-06	0	0	0	0	3.51192E-05	3.51192E-05	0	0	1.19072E-10	8.8696E-09	8.98867E-09	0.0089887
3971753767789	397175	3767789	8.74035E-06	8.74035E-06	0	0	0	0	3.49614E-05	3.49614E-05	0	0	1.18537E-10	8.82975E-09	8.94829E-09	0.0089483
3972253767789	397225	3767789	8.63093E-06	8.63093E-06	0	0	0	0	3.45237E-05	3.45237E-05	0	0	1.17053E-10	8.71921E-09	8.83627E-09	0.0088363
3972753767789	397275	3767789	8.15315E-06	8.15315E-06	0	0	0	0	3.26126E-05	3.26126E-05	0	0	1.10573E-10	8.23655E-09	8.34712E-09	0.0083471
3973253767789	397325	3767789	7.95506E-06	7.95506E-06	0	0	0	0	3.18203E-05	3.18203E-05	0	0	1.07887E-10	8.03643E-09	8.14432E-09	0.0081443
3973753767789	397375	3767789	7.98046E-06	7.98046E-06	0	0	0	0	3.19218E-05	3.19218E-05	0	0	1.08231E-10	8.06209E-09	8.17032E-09	0.0081703
3974253767789	397425	3767789	7.81708E-06	7.81708E-06	0	0	0	0	3.12683E-05	3.12683E-05	0	0	1.06016E-10	7.89704E-09	8.00305E-09	0.0080031
3974753767789	397475	3767789	6.81191E-06	6.81191E-06	0	0	0	0	2.72477E-05	2.72477E-05	0	0	9.23836E-11	6.88159E-09	6.97398E-09	0.006974
3975253767789	397525	3767789	6.60683E-06	6.60683E-06	0	0	0	0	2.64273E-05	2.64273E-05	0	0	8.96022E-11	6.67441E-09	6.76401E-09	0.006764
3964253767839	396425	3767839	8.21604E-06	8.21604E-06	0	0	0	0	3.28642E-05	3.28642E-05	0	0	1.11426E-10	8.30009E-09	8.41151E-09	0.0084115
3964753767839	396475	3767839	8.16376E-06	8.16376E-06	0	0	0	0	3.26551E-05	3.26551E-05	0	0	1.10717E-10	8.24727E-09	8.35799E-09	0.008358
3965253767839	396525	3767839	7.40369E-06	7.40369E-06	0	0	0	0	2.96148E-05	2.96148E-05	0	0	1.00409E-10	7.47942E-09	7.57983E-09	0.0075798
3965753767839	396575	3767839	7.61628E-06	7.61628E-06	0	0	0	0	3.04651E-05	3.04651E-05	0	0	1.03292E-10	7.69419E-09	7.79748E-09	0.0077975
3966253767839	396625	3767839	7.84574E-06	7.84574E-06	0	0	0	0	3.1383E-05	3.1383E-05	0	0	1.06404E-10	7.926E-09	8.0324E-09	0.0080324
3966753767839	396675	3767839	8.75109E-06	8.75109E-06	0	0	0	0	3.50044E-05	3.50044E-05	0	0	1.18683E-10	8.8406E-09	8.95929E-09	0.0089593
3967253767839	396725	3767839	9.16746E-06	9.16746E-06	0	0	0	0	3.66698E-05	3.66698E-05	0	0	1.2433E-10	9.26123E-09	9.38556E-09	0.0093856
3967753767839	396775	3767839	9.40771E-06	9.40771E-06	0	0	0	0	3.76308E-05	3.76308E-05	0	0	1.27588E-10	9.50394E-09	9.63153E-09	0.0096315
3968253767839	396825	3767839	9.64221E-06	9.64221E-06	0	0	0	0	3.85688E-05	3.85688E-05	0	0	1.30768E-10	9.74084E-09	9.87161E-09	0.0098716
3968753767839	396875	3767839	9.75542E-06	9.75542E-06	0	0	0	0	3.90217E-05	3.90217E-05	0	0	1.32304E-10	9.85521E-09	9.98751E-09	0.0099875
3969253767839	396925	3767839	9.78484E-06	9.78484E-06	0	0	0	0	3.91394E-05	3.91394E-05	0	0	1.32703E-10	9.88493E-09	1.00176E-08	0.0100176
3969753767839	396975	3767839	9.68405E-06	9.68405E-06	0	0	0	0	3.87362E-05	3.87362E-05	0	0	1.31336E-10	9.7831E-09	9.91444E-09	0.0099144
3970253767839	397025	3767839	9.60676E-06	9.60676E-06	0	0	0	0	3.8427E-05	3.8427E-05	0	0	1.30287E-10	9.70502E-09	9.83531E-09	0.0098353
3970753767839	397075	3767839	9.81404E-06	9.81404E-06	0	0	0	0	3.92562E-05	3.92562E-05	0	0	1.33099E-10	9.91443E-09	1.00475E-08	0.0100475
3971253767839	397125	3767839	9.99446E-06	9.99446E-06	0	0	0	0	3.99778E-05	3.99778E-05	0	0	1.35545E-10	1.00967E-08	1.02322E-08	0.0102322
3971753767839	397175	3767839	9.86235E-06	9.86235E-06	0	0	0	0	3.94494E-05	3.94494E-05	0	0	1.33754E-10	9.96323E-09	1.0097E-08	0.010097
3972253767839	397225	3767839	9.48179E-06	9.48179E-06	0	0	0	0	3.79272E-05	3.79272E-05	0	0	1.28593E-10	9.57878E-09	9.70738E-09	0.0097074
3972753767839	397275	3767839	8.98205E-06	8.98205E-06	0	0	0	0	3.59282E-05	3.59282E-05	0	0	1.21815E-10	9.07392E-09	9.19574E-09	0.0091957
3973253767839	397325	3767839	8.56318E-06	8.56318E-06	0	0	0	0	3.42527E-05	3.42527E-05	0	0	1.16134E-10	8.65077E-09	8.76691E-09	0.0087669
3973753767839	397375	3767839	8.90805E-06	8.90805E-06	0	0	0	0	3.56322E-05	3.56322E-05	0	0	1.20812E-10	8.99917E-09	9.11999E-09	0.00912
3974753767839	397475	3767839	8.39684E-06	8.39684E-06	0	0	0	0	3.35873E-05	3.35873E-05	0	0	1.13878E-10	8.48273E-09	8.59661E-09	0.0085966
3975253767839	397525	3767839	7.17645E-06	7.17645E-06	0	0	0	0	2.87058E-05	2.87058E-05	0	0	9.73275E-11	7.24986E-09	7.34719E-09	0.0073472
3964253767889	396425	3767889	8.68786E-06	8.68786E-06	0	0	0	0	3.47514E-05	3.47514E-05	0	0	1.17825E-10	8.77673E-09	8.89455E-09	0.0088946
3964753767889	396475	3767889	7.72394E-06	7.72394E-06	0	0	0	0	3.08958E-05	3.08958E-05	0	0	1.04753E-10	7.80295E-09	7.9077E-09	0.0079077
3965253767889	396525	3767889	7.92693E-06	7.92693E-06	0	0	0	0	3.17077E-05	3.17077E-05	0	0	1.07506E-10	8.00802E-09	8.11552E-09	0.0081155
3965753767889	396575	3767889	8.28594E-06	8.28594E-06	0	0	0	0	3.31437E-05	3.31437E-05	0	0	1.12374E-10	8.37069E-09	8.48307E-09	0.0084831
3974753767889	397475	3767889	9.11005E-06	9.11005E-06	0	0	0	0	3.64402E-05	3.64402E-05	0	0	1.23551E-10	9.20324E-09	9.32679E-09	0.0093268
3975253767889	397525	3767889	7.91657E-06	7.91657E-06	0	0	0	0	3.16663E-05	3.16663E-05	0	0	1.07365E-10	7.99755E-09	8.10491E-09	0.0081049
3964253767939	396425	3767939	9.223E-06	9.223E-06	0	0	0	0	3.6892E-05	3.6892E-05	0	0	1.25083E-10	9.31734E-09	9.44243E-09	0.0094424
3964753767939	396475	3767939	8.29009E-06	8.29009E-06	0	0	0	0	3.31604E-05	3.31604E-05	0	0	1.12431E-10	8.37489E-09	8.48732E-09	0.0084873
3965253767939	396525	3767939	8.58704E-06	8.58704E-06	0	0	0	0	3.43482E-05	3.43482E-05	0	0	1.16458E-10	8.67488E-09	8.79133E-09	0.0087913
3974753767939	397475	3767939	9.67969E-06	9.67969E-06	0	0	0	0	3.87187E-05	3.87187E-05	0	0	1.31276E-10	9.7787E-09	9.90998E-09	0.00991
3975253767939	397525	3767939	8.84858E-06	8.84858E-06	0	0	0	0	3.53943E-05	3.53943E-05	0	0	1.20005E-10	8.93909E-09	9.05909E-09	0.0090591
3964253767989	396425	3767989	9.04835E-06	9.04835E-06	0	0	0	0	3.61934E-05	3.61934E-05	0	0	1.22714E-10	9.14091E-09	9.26362E-09	0.0092636
3964753767989	396475	3767989	9.00918E-06	9.00918E-06	0	0	0	0	3.60367E-05	3.60367E-05	0	0	1.22183E-10	9.10134E-09	9.22352E-09	0.0092235
3974753767989	397475	3767989	1.11242E-05	1.11242E-05	0	0	0	0	4.44968E-05	4.44968E-05	0	0	1.50867E-10	1.1238E-08	1.13889E-08	0.0113889
3975253767989	397525	3767989	1.00822E-05	1.00822E-05	0	0	0	0	4.03288E-05	4.03288E-05	0	0	1.36735E-10	1.01853E-08	1.03221E-08	0.0103221
3964253768039	396425	3768039	9.75461E-06	9.75461E-06	0	0	0	0	3.90184E-05	3.90184E-05	0	0	1.32293E-10	9.85439E-09	9.98668E-09	0.0099867
3964753768039	396475	3768039	1.00792E-05	1.00792E-05	0	0	0	0	4.03168E-05	4.03168E-05	0	0	1.36695E-10	1.01823E-08	1.0319E-08	0.010319
3974753768039	397475	3768039	1.48514E-05	1.48514E-05	0	0	0	0	5.94058E-05	5.94058E-05	0	0	2.01416E-10	1.50034E-08	1.52048E-08	0.0152048
3975253768039	397525	3768039	1.38974E-05	1.38974E-05	0	0	0	0	5.55896E-05	5.55896E-05	0	0	1.88477E-10	1.40396E-08	1.4228E-08	0.014228
3964253768089	396425	3768089	1.07571E-05	1.07571E-05	0	0	0	0	4.30282E-05	4.30282E-05	0	0	1.45888E-10	1.08671E-08	1.1013E-08	0.011013
3964753768089	396475	3768089	1.13061E-05	1.13061E-05	0	0	0	0	4.52245E-05	4.52245E-05	0	0	1.53334E-10	1.14218E-08	1.15751E-08	0.0115751
3974753768089	397475	3768089	1.99899E-05	1.99899E-05	0	0	0	0	7.99597E-05	7.99597E-05	0	0	2.71104E-10	2.01944E-08	2.04655E-08	0.0204655
3975253768089	397525	3768089	1.841E-05	1.841E-05	0	0	0	0	7.36401E-05	7.36401E-05	0	0	2.49678E-10	1.85983E-08	1.8848E-08	0.018848
3964253768139	396425	3768139	1.33947E-05	1.33947E-05	0	0	0	0	5.35788E-05	5.35788E-05	0	0	1.8166E-10	1.35317E-08	1.37134E-08	0.0137134
3964753768139	396475	3768139	1.23382E-05	1.23382E-05	0	0	0	0	4.93528E-05	4.93528E-05	0	0	1.67331E-10	1.24644E-08	1.26317E-08	0.0126317
3974253768139	397425	3768139	4.24084E-05	4.24084E-05	0	0	0	0	0.000169634	0.000169634	0	0	5.75145E-10	4.28422E-08	4.34174E-08	0.0434174
3974753768139	397475	3768139	3.07235E-05	3.07235E-05	0	0	0	0	0.000122894	0.000122894	0	0	4.16674E-10	3.10378E-08	3.14544E-08	0.0314544
3975253768139	397525	3768139	2.31816E-05	2.31816E-05	0	0	0	0	9.27263E-05	9.27263E-05	0	0	3.1439E-10	2.34187E-08	2.37331E-08	0.0237331
3964253768189	396425	3768189	1.44308E-05	1.44308E-05	0	0	0	0	5.77234E-05	5.77234E-05	0	0	1.95712E-10	1.45785E-08	1.47742E-08	0.0147742
3964753768189	396475	3768189	1.35066E-05	1.35066E-05	0	0	0	0	5.40263E-05	5.40263E-05	0	0	1.83177E-10	1.36447E-08	1.38279E-08	0.0138279
3973753768189	397375	3768189	0.000251374	0.000251374	0	0	0	0	0.001005496	0.001005496	0	0	3.40915E-09	2.53945E-07	2.57354E-07	0.2573544

Garvey Reservoir Rehab - Unmitigated Reservoir Cover and Liner Work			Demolition - 2025	Demolition - 2026	Site Preparation - 2025	ite Preparation - 202	Grading - 2025	Grading - 2026	Infrastructure - 2025	nfrastructure - 2026	Paving - 2025	rchitectural Coating - 202	Child Risk			
Unique Identifier	X (UTM)	Y (UTM)	2025	2026	1900	1900	1900	1900	2026	2027	1900	1900	3rd Trimester	0<2	Total	per million
3974253768189	397425	3768189	7.26092E-05	7.26092E-05	0	0	0	0	0.000290437	0.000290437	0	0	9.8473E-10	7.33519E-08	7.43366E-08	0.0743366
3974753768189	397475	3768189	4.16037E-05	4.16037E-05	0	0	0	0	0.000166415	0.000166415	0	0	5.64232E-10	4.20293E-08	4.25935E-08	0.0425935
3975253768189	397525	3768189	2.86451E-05	2.86451E-05	0	0	0	0	0.000114581	0.000114581	0	0	3.88487E-10	2.89381E-08	2.93266E-08	0.0293266
3964253768239	396425	3768239	1.56187E-05	1.56187E-05	0	0	0	0	6.24749E-05	6.24749E-05	0	0	2.11822E-10	1.57785E-08	1.59903E-08	0.0159903
3964753768239	396475	3768239	1.49348E-05	1.49348E-05	0	0	0	0	5.97394E-05	5.97394E-05	0	0	2.02547E-10	1.50876E-08	1.52902E-08	0.0152902
3973753768239	397375	3768239	0.000366194	0.000366194	0	0	0	0	0.001464777	0.001464777	0	0	4.96635E-09	3.6994E-07	3.74906E-07	0.3749064
3974253768239	397425	3768239	9.31217E-05	9.31217E-05	0	0	0	0	0.000372487	0.000372487	0	0	1.26292E-09	9.40742E-08	9.53372E-08	0.0953372
3974753768239	397475	3768239	5.02084E-05	5.02084E-05	0	0	0	0	0.000200833	0.000200833	0	0	6.80929E-10	5.07219E-08	5.14029E-08	0.0514029
3975253768239	397525	3768239	3.40586E-05	3.40586E-05	0	0	0	0	0.000136234	0.000136234	0	0	4.61904E-10	3.4407E-08	3.48689E-08	0.0348689
3964253768289	396425	3768289	1.67187E-05	1.67187E-05	0	0	0	0	6.68749E-05	6.68749E-05	0	0	2.2674E-10	1.68897E-08	1.71165E-08	0.0171165
3964753768289	396475	3768289	1.66394E-05	1.66394E-05	0	0	0	0	6.65577E-05	6.65577E-05	0	0	2.25665E-10	1.68096E-08	1.70353E-08	0.0170353
3973253768289	397325	3768289	0.000970128	0.000970128	0	0	0	0	0.00388051	0.00388051	0	0	1.31569E-08	9.80051E-07	9.93208E-07	0.9932078
3973753768289	397375	3768289	0.000256808	0.000256808	0	0	0	0	0.001027231	0.001027231	0	0	3.48284E-09	2.59435E-07	2.62917E-07	0.2629174
3974253768289	397425	3768289	0.000113184	0.000113184	0	0	0	0	0.000452735	0.000452735	0	0	1.53501E-09	1.14342E-07	1.15877E-07	0.1158766
3974753768289	397475	3768289	6.23968E-05	6.23968E-05	0	0	0	0	0.000249587	0.000249587	0	0	8.46228E-10	6.3035E-08	6.38812E-08	0.0638812
3975253768289	397525	3768289	4.04861E-05	4.04861E-05	0	0	0	0	0.000161944	0.000161944	0	0	5.49075E-10	4.09002E-08	4.14493E-08	0.0414493
3964253768339	396425	3768339	1.89441E-05	1.89441E-05	0	0	0	0	7.57765E-05	7.57765E-05	0	0	2.56921E-10	1.91379E-08	1.93948E-08	0.0193948
3964753768339	396475	3768339	1.88028E-05	1.88028E-05	0	0	0	0	7.52111E-05	7.52111E-05	0	0	2.55004E-10	1.89951E-08	1.92501E-08	0.0192501
3965253768339	396525	3768339	2.00438E-05	2.00438E-05	0	0	0	0	8.01753E-05	8.01753E-05	0	0	2.71835E-10	2.02489E-08	2.05207E-08	0.0205207
3972753768339	397275	3768339	0.000788164	0.000788164	0	0	0	0	0.003152655	0.003152655	0	0	1.06891E-08	7.96226E-07	8.06915E-07	0.806915
3973253768339	397325	3768339	0.000581036	0.000581036	0	0	0	0	0.002324144	0.002324144	0	0	7.88004E-09	5.86979E-07	5.94859E-07	0.5948594
3973753768339	397375	3768339	0.00021402	0.00021402	0	0	0	0	0.000856082	0.000856082	0	0	2.90256E-09	2.1621E-07	2.19112E-07	0.2191122
3974253768339	397425	3768339	0.000112533	0.000112533	0	0	0	0	0.000450133	0.000450133	0	0	1.52618E-09	1.13684E-07	1.1521E-07	0.1152105
3974753768339	397475	3768339	6.76729E-05	6.76729E-05	0	0	0	0	0.000270692	0.000270692	0	0	9.17783E-10	6.83651E-08	6.92829E-08	0.0692829
3975253768339	397525	3768339	4.496E-05	4.496E-05	0	0	0	0	0.00017984	0.00017984	0	0	6.0975E-10	4.54199E-08	4.60296E-08	0.0460296
3964253768389	396425	3768389	2.10518E-05	2.10518E-05	0	0	0	0	8.42071E-05	8.42071E-05	0	0	2.85505E-10	2.12671E-08	2.15526E-08	0.0215526
3964753768389	396475	3768389	2.14284E-05	2.14284E-05	0	0	0	0	8.57137E-05	8.57137E-05	0	0	2.90614E-10	2.16476E-08	2.19382E-08	0.0219382
3965253768389	396525	3768389	2.24599E-05	2.24599E-05	0	0	0	0	8.98394E-05	8.98394E-05	0	0	3.04602E-10	2.26896E-08	2.29942E-08	0.0229942
3972253768389	397225	3768389	0.000189473	0.000189473	0	0	0	0	0.000757892	0.000757892	0	0	2.56964E-09	1.91411E-07	1.93981E-07	0.1939808
3972753768389	397275	3768389	0.000750467	0.000750467	0	0	0	0	0.003001867	0.003001867	0	0	1.01779E-08	7.58143E-07	7.68321E-07	0.7683212
3973253768389	397325	3768389	0.00058123	0.00058123	0	0	0	0	0.002324919	0.002324919	0	0	7.88267E-09	5.87175E-07	5.95058E-07	0.5950578
3973753768389	397375	3768389	0.000206027	0.000206027	0	0	0	0	0.000824108	0.000824108	0	0	2.79415E-09	2.08134E-07	2.10929E-07	0.2109286
3974253768389	397425	3768389	0.000112723	0.000112723	0	0	0	0	0.000450894	0.000450894	0	0	1.52876E-09	1.13877E-07	1.15405E-07	0.1154053
3974753768389	397475	3768389	7.12803E-05	7.12803E-05	0	0	0	0	0.000285121	0.000285121	0	0	9.66707E-10	7.20094E-08	7.29761E-08	0.0729761
3975253768389	397525	3768389	4.89604E-05	4.89604E-05	0	0	0	0	0.000195842	0.000195842	0	0	6.64004E-10	4.94612E-08	5.01252E-08	0.0501252
3964253768439	396425	3768439	2.38928E-05	2.38928E-05	0	0	0	0	9.55711E-05	9.55711E-05	0	0	3.24035E-10	2.41372E-08	2.44612E-08	0.0244612
3964753768439	396475	3768439	2.46051E-05	2.46051E-05	0	0	0	0	9.84203E-05	9.84203E-05	0	0	3.33695E-10	2.48568E-08	2.51905E-08	0.0251905
3965253768439	396525	3768439	2.54921E-05	2.54921E-05	0	0	0	0	0.000101968	0.000101968	0	0	3.45725E-10	2.57528E-08	2.60985E-08	0.0260985
3971753768439	397175	3768439	0.000102075	0.000102075	0	0	0	0	0.000408302	0.000408302	0	0	1.38435E-09	1.0312E-07	1.04504E-07	0.1045039
3972253768439	397225	3768439	0.000198768	0.000198768	0	0	0	0	0.000795073	0.000795073	0	0	2.69571E-09	2.00801E-07	2.03497E-07	0.2034972
3972753768439	397275	3768439	0.000754179	0.000754179	0	0	0	0	0.003016715	0.003016715	0	0	1.02282E-08	7.61893E-07	7.72122E-07	0.7721215
3973253768439	397325	3768439	0.000567481	0.000567481	0	0	0	0	0.002269924	0.002269924	0	0	7.69621E-09	5.73286E-07	5.80982E-07	0.580982
3973753768439	397375	3768439	0.000190445	0.000190445	0	0	0	0	0.000761778	0.000761778	0	0	2.58282E-09	1.92393E-07	1.94975E-07	0.1949755
3974253768439	397425	3768439	0.000104214	0.000104214	0	0	0	0	0.000416855	0.000416855	0	0	1.41335E-09	1.0528E-07	1.06693E-07	0.1066931
3974753768439	397475	3768439	7.37959E-05	7.37959E-05	0	0	0	0	0.000295184	0.000295184	0	0	1.00082E-09	7.45507E-08	7.55516E-08	0.0755516
3975253768439	397525	3768439	5.18253E-05	5.18253E-05	0	0	0	0	0.000207301	0.000207301	0	0	7.02858E-10	5.23555E-08	5.30583E-08	0.0530583
3964253768489	396425	3768489	2.72532E-05	2.72532E-05	0	0	0	0	0.000109013	0.000109013	0	0	3.6961E-10	2.7532E-08	2.79016E-08	0.0279016
3964753768489	396475	3768489	2.8417E-05	2.8417E-05	0	0	0	0	0.000113668	0.000113668	0	0	3.85394E-10	2.87077E-08	2.90931E-08	0.0290931
3965253768489	396525	3768489	2.95221E-05	2.95221E-05	0	0	0	0	0.000118088	0.000118088	0	0	4.00381E-10	2.98241E-08	3.02245E-08	0.0302245
3970753768489	397075	3768489	5.81399E-05	5.81399E-05	0	0	0	0	0.00023256	0.00023256	0	0	7.88496E-10	5.87346E-08	5.95231E-08	0.0595231
3971253768489	397125	3768489	7.3862E-05	7.3862E-05	0	0	0	0	0.000295448	0.000295448	0	0	1.00172E-09	7.46176E-08	7.56193E-08	0.0756193
3971753768489	397175	3768489	0.000106825	0.000106825	0	0	0	0	0.000427298	0.000427298	0	0	1.44876E-09	1.07917E-07	1.09366E-07	0.109366
3972253768489	397225	3768489	0.000197614	0.000197614	0	0	0	0	0.000790455	0.000790455	0	0	2.68005E-09	1.99635E-07	2.02315E-07	0.2023152
3972753768489	397275	3768489	0.000740434	0.000740434	0	0	0	0	0.002961738	0.002961738	0	0	1.00418E-08	7.48008E-07	7.5805E-07	0.7580502
3973253768489	397325	3768489	0.000489762	0.000489762	0	0	0	0	0.001959049	0.001959049	0	0	6.64218E-09	4.94772E-07	5.01414E-07	0.5014142
3973753768489	397375	3768489	0.000187596	0.000187596	0	0	0	0	0.000750383	0.000750383	0	0	2.54418E-09	1.89515E-07	1.92059E-07	0.1920588
3974253768489	397425	3768489	0.000103543	0.000103543	0	0	0	0	0.000414174	0.000414174	0	0	1.40426E-09	1.04603E-07	1.06007E-07	0.1060069
3974753768489	397475	3768489	6.45349E-05	6.45349E-05	0	0	0	0	0.00025814	0.00025814	0	0	8.75226E-10	6.5195E-08	6.60702E-08	0.0660702
3975253768489	397525	3768489	4.67519E-05	4.67519E-05	0	0	0	0	0.000187008	0.000187008	0	0	6.34052E-10	4.72302E-08	4.78642E-08	0.0478642
3964253768539	396425	3768539	3.16938E-05	3.16938E-05	0	0	0	0	0.000126775	0.000126775	0	0	4.29834E-10	3.2018E-08	3.24479E-08	0.0324479
3964753768539	396475	3768539	3.34216E-05	3.34216E-05	0	0	0	0	0.000133687	0.000133687	0	0	4.53266E-10	3.37635E-08	3.42168E-08	0.0342168
3965253768539	396525	3768539	3.45357E-05	3.45357E-05	0	0	0	0	0.000138143	0.000138143	0	0	4.68375E-10	3.48889E-08	3.53573E-08	0.0353573
3965753768539	396575	3768539	3.32369E-05	3.32369E-05	0	0	0	0	0.000132948	0.000132948	0	0	4.50761E-10	3.35769E-08	3.40277E-08	0.0340277
3970253768539	397025	3768539	5.49967E-05	5.49967E-05	0	0	0	0	0.000219987	0.000219987	0	0	7.45868E-10	5.55592E-08	5.63051E-08	0.0563051
3970753768539	397075	3768539	6.43527E-05	6.43527E-05	0	0	0	0	0.000257411	0.000257411	0	0	8.72754E-10	6.50109E-08	6.58837E-08	0.0658837
3971253768539	397125	3768539	8.08591E-05	8.08591E-05	0	0	0	0	0.000323436	0.000323436	0	0	1.09662E-09	8.16862E-08	8.27828E-08	0.0827828
3971753768539	397175	3768539	0.000115452	0.000115452	0	0	0	0	0.000461808	0.000461808	0	0	1.56577E-09	1.16633E-07	1.18199E-07	0.1181987
3972253768539	397225	3768539	0.000202489	0.000202489	0	0	0	0	0.000809956	0.000809956	0	0	2.74617E-09	2.0456E-07	2.07307E-07	0.2073065
3972753768539	397275	3768539	0.000674464	0.000674464	0	0	0	0	0.002697856	0.002697856	0	0	9.14712E-09	6.81363E-07	6.9051E-07	0.6905102
3973253768539	397325	3768539	0.000472319	0.000472319	0	0	0	0	0.001889275	0.001889275	0	0	6.40562E-09	4.7715E-07	4.83556E-07	0.4835558
3973753768539	397375	3768539	0.000188947	0.000188947	0	0	0	0	0.000755788	0.000755788	0	0	2.56251E-09	1.9088E-07	1.93442E-07	0.1934423

Garvey Reservoir Rehab - Unmitigated Reservoir Cover and Liner Work			Demolition - 2025	Demolition - 2026	Site Preparation - 2025	ite Preparation - 202	Grading - 2025	Grading - 2026	Infrastructure - 2025	nfrastructure - 2026	Paving - 2025	rchitectural Coating - 202	Child Risk			
Unique Identifier	X (UTM)	Y (UTM)	2025	2026	1900	1900	1900	1900	2026	2027	1900	1900	3rd Trimester	0<2	Total	per million
3974253768539	397425	3768539	0.000101197	0.000101197	0	0	0	0	0.000404789	0.000404789	0	0	1.37244E-09	1.02232E-07	1.03605E-07	0.1036048
3974753768539	397475	3768539	6.5278E-05	6.5278E-05	0	0	0	0	0.000261112	0.000261112	0	0	8.85304E-10	6.59458E-08	6.68311E-08	0.0668311
3975253768539	397525	3768539	4.64848E-05	4.64848E-05	0	0	0	0	0.000185939	0.000185939	0	0	6.3043E-10	4.69603E-08	4.75908E-08	0.0475908
3964253768589	396425	3768589	3.69868E-05	3.69868E-05	0	0	0	0	0.000147947	0.000147947	0	0	5.01617E-10	3.73651E-08	3.78668E-08	0.0378668
3964753768589	396475	3768589	4.01359E-05	4.01359E-05	0	0	0	0	0.000160543	0.000160543	0	0	5.44325E-10	4.05464E-08	4.10907E-08	0.0410907
3965253768589	396525	3768589	3.99925E-05	3.99925E-05	0	0	0	0	0.00015997	0.00015997	0	0	5.42381E-10	4.04016E-08	4.0944E-08	0.040944
3965753768589	396575	3768589	3.85848E-05	3.85848E-05	0	0	0	0	0.000154339	0.000154339	0	0	5.23289E-10	3.89795E-08	3.95028E-08	0.0395028
3966253768589	396625	3768589	3.8145E-05	3.8145E-05	0	0	0	0	0.00015258	0.00015258	0	0	5.17324E-10	3.85352E-08	3.90525E-08	0.0390525
3968253768589	396825	3768589	4.69972E-05	4.69972E-05	0	0	0	0	0.000187989	0.000187989	0	0	6.37379E-10	4.74779E-08	4.81153E-08	0.0481153
3968753768589	396875	3768589	4.98163E-05	4.98163E-05	0	0	0	0	0.000199265	0.000199265	0	0	6.75611E-10	5.03258E-08	5.10014E-08	0.0510014
3969253768589	396925	3768589	5.41098E-05	5.41098E-05	0	0	0	0	0.000216439	0.000216439	0	0	7.3384E-10	5.46633E-08	5.53971E-08	0.0553971
3969753768589	396975	3768589	5.80856E-05	5.80856E-05	0	0	0	0	0.000232343	0.000232343	0	0	7.87761E-10	5.86798E-08	5.94675E-08	0.0594675
3970253768589	397025	3768589	6.38991E-05	6.38991E-05	0	0	0	0	0.000255596	0.000255596	0	0	8.66603E-10	6.45527E-08	6.54193E-08	0.0654193
3970753768589	397075	3768589	7.2588E-05	7.2588E-05	0	0	0	0	0.000290352	0.000290352	0	0	9.84443E-10	7.33305E-08	7.43149E-08	0.0743149
3971253768589	397125	3768589	9.11865E-05	9.11865E-05	0	0	0	0	0.000364746	0.000364746	0	0	1.23668E-09	9.21192E-08	9.33559E-08	0.0933559
3971753768589	397175	3768589	0.000129253	0.000129253	0	0	0	0	0.000517011	0.000517011	0	0	1.75293E-09	1.30575E-07	1.32328E-07	0.1323279
3972253768589	397225	3768589	0.000226062	0.000226062	0	0	0	0	0.000904247	0.000904247	0	0	3.06586E-09	2.28374E-07	2.3144E-07	0.23144
3972753768589	397275	3768589	0.000720408	0.000720408	0	0	0	0	0.002881634	0.002881634	0	0	9.77022E-09	7.27778E-07	7.37548E-07	0.7375477
3973253768589	397325	3768589	0.000469065	0.000469065	0	0	0	0	0.001876262	0.001876262	0	0	6.36149E-09	4.73863E-07	4.80225E-07	0.480225
3973753768589	397375	3768589	0.000188904	0.000188904	0	0	0	0	0.000755614	0.000755614	0	0	2.56192E-09	1.90836E-07	1.93398E-07	0.1933977
3974253768589	397425	3768589	9.82419E-05	9.82419E-05	0	0	0	0	0.000392968	0.000392968	0	0	1.33236E-09	9.92468E-08	1.00579E-07	0.1005792
3974753768589	397475	3768589	6.48067E-05	6.48067E-05	0	0	0	0	0.000259227	0.000259227	0	0	8.78913E-10	6.54696E-08	6.63486E-08	0.0663486
3975253768589	397525	3768589	4.6876E-05	4.6876E-05	0	0	0	0	0.000187504	0.000187504	0	0	6.35735E-10	4.73555E-08	4.79913E-08	0.0479913
3964253768639	396425	3768639	4.45817E-05	4.45817E-05	0	0	0	0	0.000178327	0.000178327	0	0	6.0462E-10	4.50377E-08	4.56423E-08	0.0456423
3964753768639	396475	3768639	5.04824E-05	5.04824E-05	0	0	0	0	0.00020193	0.00020193	0	0	6.84646E-10	5.09988E-08	5.16835E-08	0.0516835
3965253768639	396525	3768639	4.74389E-05	4.74389E-05	0	0	0	0	0.000189756	0.000189756	0	0	6.43369E-10	4.79242E-08	4.85675E-08	0.0485675
3965753768639	396575	3768639	4.7726E-05	4.7726E-05	0	0	0	0	0.000190904	0.000190904	0	0	6.47263E-10	4.82142E-08	4.88615E-08	0.0488615
3966253768639	396625	3768639	4.8578E-05	4.8578E-05	0	0	0	0	0.000194312	0.000194312	0	0	6.58818E-10	4.90749E-08	4.97337E-08	0.0497337
3966753768639	396675	3768639	4.95918E-05	4.95918E-05	0	0	0	0	0.000198367	0.000198367	0	0	6.72566E-10	5.0099E-08	5.07716E-08	0.0507716
3967253768639	396725	3768639	5.11221E-05	5.11221E-05	0	0	0	0	0.000204489	0.000204489	0	0	6.93321E-10	5.16451E-08	5.23384E-08	0.0523384
3967753768639	396775	3768639	5.38951E-05	5.38951E-05	0	0	0	0	0.00021558	0.00021558	0	0	7.30928E-10	5.44464E-08	5.51773E-08	0.0551773
3968253768639	396825	3768639	5.6558E-05	5.6558E-05	0	0	0	0	0.000226232	0.000226232	0	0	7.67043E-10	5.71365E-08	5.79036E-08	0.0579036
3968753768639	396875	3768639	6.06448E-05	6.06448E-05	0	0	0	0	0.000242579	0.000242579	0	0	8.22468E-10	6.12651E-08	6.20876E-08	0.0620876
3969253768639	396925	3768639	6.52452E-05	6.52452E-05	0	0	0	0	0.000260981	0.000260981	0	0	8.84859E-10	6.59126E-08	6.67974E-08	0.0667974
3969753768639	396975	3768639	6.93001E-05	6.93001E-05	0	0	0	0	0.0002772	0.0002772	0	0	9.39852E-10	7.0009E-08	7.09488E-08	0.0709488
3970253768639	397025	3768639	7.47681E-05	7.47681E-05	0	0	0	0	0.000299072	0.000299072	0	0	1.01401E-09	7.55329E-08	7.65469E-08	0.0765469
3970753768639	397075	3768639	8.29754E-05	8.29754E-05	0	0	0	0	0.000331902	0.000331902	0	0	1.12532E-09	8.38241E-08	8.49495E-08	0.0849495
3971253768639	397125	3768639	9.97722E-05	9.97722E-05	0	0	0	0	0.000399089	0.000399089	0	0	1.35312E-09	1.00793E-07	1.02146E-07	0.1021459
3971753768639	397175	3768639	0.000145964	0.000145964	0	0	0	0	0.000583854	0.000583854	0	0	1.97957E-09	1.47457E-07	1.49436E-07	0.1494361
3972253768639	397225	3768639	0.000287662	0.000287662	0	0	0	0	0.001150647	0.001150647	0	0	3.90129E-09	2.90604E-07	2.94506E-07	0.2945055
3972753768639	397275	3768639	0.001002035	0.001002035	0	0	0	0	0.004008139	0.004008139	0	0	1.35897E-08	1.01228E-06	1.02587E-06	1.0258741
3973253768639	397325	3768639	0.000422525	0.000422525	0	0	0	0	0.0016901	0.0016901	0	0	5.73031E-09	4.26847E-07	4.32577E-07	0.4325773
3973753768639	397375	3768639	0.000186159	0.000186159	0	0	0	0	0.000744636	0.000744636	0	0	2.5247E-09	1.88063E-07	1.90588E-07	0.1905879
3974253768639	397425	3768639	0.000108512	0.000108512	0	0	0	0	0.000434048	0.000434048	0	0	1.47165E-09	1.09622E-07	1.11094E-07	0.1110937
3974753768639	397475	3768639	6.44145E-05	6.44145E-05	0	0	0	0	0.000257658	0.000257658	0	0	8.73594E-10	6.50734E-08	6.5947E-08	0.065947
3975253768639	397525	3768639	4.7333E-05	4.7333E-05	0	0	0	0	0.000189332	0.000189332	0	0	6.41933E-10	4.78172E-08	4.84591E-08	0.0484591
3964253768689	396425	3768689	5.74646E-05	5.74646E-05	0	0	0	0	0.000229859	0.000229859	0	0	7.79339E-10	5.80524E-08	5.88318E-08	0.0588318
3964753768689	396475	3768689	6.81666E-05	6.81666E-05	0	0	0	0	0.000272667	0.000272667	0	0	9.2448E-10	6.88639E-08	6.97884E-08	0.0697884
3965253768689	396525	3768689	7.07517E-05	7.07517E-05	0	0	0	0	0.000283007	0.000283007	0	0	9.59539E-10	7.14754E-08	7.2435E-08	0.072435
3965753768689	396575	3768689	6.95382E-05	6.95382E-05	0	0	0	0	0.000278153	0.000278153	0	0	9.43081E-10	7.02495E-08	7.11926E-08	0.0711926
3966253768689	396625	3768689	7.03557E-05	7.03557E-05	0	0	0	0	0.000281423	0.000281423	0	0	9.54168E-10	7.10753E-08	7.20295E-08	0.0720295
3966753768689	396675	3768689	6.98859E-05	6.98859E-05	0	0	0	0	0.000279543	0.000279543	0	0	9.47796E-10	7.06007E-08	7.15485E-08	0.0715485
3967253768689	396725	3768689	7.10507E-05	7.10507E-05	0	0	0	0	0.000284203	0.000284203	0	0	9.63593E-10	7.17775E-08	7.27411E-08	0.0727411
3967753768689	396775	3768689	7.20714E-05	7.20714E-05	0	0	0	0	0.000288285	0.000288285	0	0	9.77436E-10	7.28086E-08	7.3786E-08	0.073786
3968253768689	396825	3768689	7.59723E-05	7.59723E-05	0	0	0	0	0.000303889	0.000303889	0	0	1.03034E-09	7.67494E-08	7.77797E-08	0.0777797
3968753768689	396875	3768689	8.00195E-05	8.00195E-05	0	0	0	0	0.000320078	0.000320078	0	0	1.08523E-09	8.0838E-08	8.19232E-08	0.0819232
3969253768689	396925	3768689	8.34748E-05	8.34748E-05	0	0	0	0	0.000333899	0.000333899	0	0	1.13209E-09	8.43286E-08	8.54607E-08	0.0854607
3969753768689	396975	3768689	8.70377E-05	8.70377E-05	0	0	0	0	0.000348151	0.000348151	0	0	1.18041E-09	8.7928E-08	8.91084E-08	0.0891084
3970253768689	397025	3768689	9.20079E-05	9.20079E-05	0	0	0	0	0.000368032	0.000368032	0	0	1.24782E-09	9.29491E-08	9.41969E-08	0.0941969
3970753768689	397075	3768689	0.000100925	0.000100925	0	0	0	0	0.000403699	0.000403699	0	0	1.36875E-09	1.01957E-07	1.03326E-07	0.1033258
3971253768689	397125	3768689	0.000117858	0.000117858	0	0	0	0	0.000471432	0.000471432	0	0	1.5984E-09	1.19064E-07	1.20662E-07	0.120662
3971753768689	397175	3768689	0.000164349	0.000164349	0	0	0	0	0.000657395	0.000657395	0	0	2.22891E-09	1.6603E-07	1.68259E-07	0.1682589
3972253768689	397225	3768689	0.000372703	0.000372703	0	0	0	0	0.001490811	0.001490811	0	0	5.05461E-09	3.76515E-07	3.8157E-07	0.3815696
3972753768689	397275	3768689	0.001023715	0.001023715	0	0	0	0	0.00409486	0.00409486	0	0	1.38837E-08	1.03419E-06	1.04807E-06	1.0480703
3973253768689	397325	3768689	0.000342623	0.000342623	0	0	0	0	0.001370494	0.001370494	0	0	4.64668E-09	3.46128E-07	3.50775E-07	0.3507748
3973753768689	397375	3768689	0.000173454	0.000173454	0	0	0	0	0.000693814	0.000693814	0	0	2.35239E-09	1.75228E-07	1.7758E-07	0.1775802
3974253768689	397425	3768689	0.000108349	0.000108349	0	0	0	0	0.000433395	0.000433395	0	0	1.46943E-09	1.09457E-07	1.10926E-07	0.1109264
3974753768689	397475	3768689	7.39421E-05	7.39421E-05	0	0	0	0	0.000295768	0.000295768	0	0	1.00281E-09	7.46984E-08	7.57012E-08	0.0757012
3975253768689	397525	3768689	5.3666E-05	5.3666E-05	0	0	0	0	0.000214664	0.000214664	0	0	7.27821E-10	5.4215E-08	5.49428E-08	0.0549428

Garvey Reservoir Rehab - Unmitigated Reservoir Cover and Liner Work

Maximum Individual Non-Cancer Impact Calculations - Sensitive Receptors (Maximum Impacted Senior Residential Receptor) (IMPACT AT ALL OTHER LOCATIONS ON THE PROJECT SITE WOULD BE LESS THAN SHOWN)

Maximum Non-cancer Chronic Hazards / Toxicological Endpoints*

Receptor Group	Pollutant	CREL[1]	CONC	WFrac	$CONC_{WF}$	HI		ALIM	BN	CVS	DEV	ENDC	EYE	HEM	IMMUN	KIDN	NS	REPRO	RESP	SK
Project:																				
MEI - Max	DPM	5.00E+00	1.48E-02	1.00E+00	1.48E-02	0.003		-	-	-	-	-	-	-	-	-	-	-	2.97E-03	-
							Total Risk				-			-				-	0.003	
							Threshold				1.00			1.00				1.00	1.00	
							Over?				NO			NO				NO	NO	

Notes:

1. California Air Resources Board, "Consolidated Table of OEHHA/ARB Approved Risk Assessment Health Values," "OEHHA/ARB Approved Chronic Reference Exposure Levels and Target Organs," "OEHHA/ARB Approved Acute Reference Exposure Levels and Target Organs," and "OEHHA/ARB Approved 8-Hour Reference Exposure Levels and Target Organs," http://www.arb.ca.gov/toxics/healthval/healthval.htm. Tables last updated: May 8, 2018. Downloaded: 08/14/18.

Source: ESA, 2020

Where:

$CONC_{WF}$	Pollutant Concentration ($\mu g/m^3$) multiplied by the weight fraction
CREL	Chronic Reference Exposure Level
HI	Hazard Index
MEI	Maximally Exposed Individual
WFrac	Weight fraction of speciated component

* Key to Toxicological Endpoints

ALIM	Alimentary Tract	EYE	Eye	NS	Nervous System
BN	Bone	HEM	Hematologic System	REPRO	Reproductive System
CVS	Cardiovascular System	IMMUN	Immune System	RESP	Respiratory System
DEV	Developmental System	KIDN	Kidney	SK	Skin
ENDC	Endocrine System				

Chronic HI

Garvey Reservoir Rehab - Mitigated Reservoir Cover and Liner Work

Cancer Risk Summary & Maximum Annual GLC for Chronic Calculations

Cancer Risk Summary

Max Risk: 1.090427

XY	X	Y	Offroad Risk	Haul Risk	Total Risk
396166.283767377.28	396166.28	3767377.3	0.003904711	0.003921235	0.007825946
396266.283767377.28	396266.28	3767377.3	0.004201731	0.004010132	0.008211863
396366.283767377.28	396366.28	3767377.3	0.004660438	0.004173228	0.008833667
396466.283767377.28	396466.28	3767377.3	0.005016578	0.004281958	0.009298536
396566.283767377.28	396566.28	3767377.3	0.00543611	0.0046942	0.01013031
396666.283767377.28	396666.28	3767377.3	0.005550074	0.004438107	0.009988181
396766.283767377.28	396766.28	3767377.3	0.005525857	0.004420701	0.009946558
396866.283767377.28	396866.28	3767377.3	0.00554865	0.004424574	0.009973224
396966.283767377.28	396966.28	3767377.3	0.005713186	0.00448312	0.010196306
397066.283767377.28	397066.28	3767377.3	0.005726719	0.004370062	0.010096781
397166.283767377.28	397166.28	3767377.3	0.005474573	0.004310284	0.009784857
397266.283767377.28	397266.28	3767377.3	0.005069999	0.004315484	0.009385483
397366.283767377.28	397366.28	3767377.3	0.004817852	0.004118765	0.008936617
397466.283767377.28	397466.28	3767377.3	0.004521544	0.003707955	0.008229499
397566.283767377.28	397566.28	3767377.3	0.004105574	0.003647262	0.007752835
397666.283767377.28	397666.28	3767377.3	0.003713108	0.003540204	0.007253312
397766.283767377.28	397766.28	3767377.3	0.003265797	0.003653618	0.006919415
397866.283767377.28	397866.28	3767377.3	0.002933163	0.003480089	0.006413252
396166.283767477.28	396166.28	3767477.3	0.004455302	0.004512453	0.008967755
396266.283767477.28	396266.28	3767477.3	0.004797908	0.004409144	0.009207052
396366.283767477.28	396366.28	3767477.3	0.005485257	0.00464516	0.010130418
396466.283767477.28	396466.28	3767477.3	0.006098529	0.005087616	0.011186145
396566.283767477.28	396566.28	3767477.3	0.006610657	0.00515675	0.011767407
396666.283767477.28	396666.28	3767477.3	0.006894856	0.005007013	0.01190187
396766.283767477.28	396766.28	3767477.3	0.007055119	0.00504618	0.012101299
396866.283767477.28	396866.28	3767477.3	0.007154126	0.005075645	0.012229771
396966.283767477.28	396966.28	3767477.3	0.007364248	0.005151203	0.012515451
397066.283767477.28	397066.28	3767477.3	0.007378493	0.005052211	0.012430704
397166.283767477.28	397166.28	3767477.3	0.007032326	0.004893089	0.011925415
397266.283767477.28	397266.28	3767477.3	0.006434012	0.004909259	0.011343271
397366.283767477.28	397366.28	3767477.3	0.005899091	0.004761576	0.010660667
397466.283767477.28	397466.28	3767477.3	0.005441808	0.004294742	0.00973655
397566.283767477.28	397566.28	3767477.3	0.004863438	0.004072951	0.008936389
397666.283767477.28	397666.28	3767477.3	0.004290054	0.003983625	0.008273679
397766.283767477.28	397766.28	3767477.3	0.003777925	0.003889013	0.007666938
397866.283767477.28	397866.28	3767477.3	0.00333845	0.003742791	0.00708124
396166.283767577.28	396166.28	3767577.3	0.004938939	0.004756704	0.009695643
396266.283767577.28	396266.28	3767577.3	0.005532267	0.004889841	0.010422108
396366.283767577.28	396366.28	3767577.3	0.006354237	0.005114124	0.011468361
396466.283767577.28	396466.28	3767577.3	0.007309402	0.005430422	0.012739825
396566.283767577.28	396566.28	3767577.3	0.008301606	0.006032272	0.014333878
396666.283767577.28	396666.28	3767577.3	0.009142095	0.006125133	0.015267228
396766.283767577.28	396766.28	3767577.3	0.009207625	0.005775832	0.014983457
396866.283767577.28	396866.28	3767577.3	0.009726876	0.005921462	0.015648337
396966.283767577.28	396966.28	3767577.3	0.009909219	0.006002444	0.015911663
397066.283767577.28	397066.28	3767577.3	0.009805939	0.00600389	0.015809829
397166.283767577.28	397166.28	3767577.3	0.009380708	0.005782364	0.015163072
397266.283767577.28	397266.28	3767577.3	0.008467567	0.005705701	0.014173268
397366.283767577.28	397366.28	3767577.3	0.007488897	0.005563501	0.013052398
397466.283767577.28	397466.28	3767577.3	0.006731032	0.004955925	0.011686957
397566.283767577.28	397566.28	3767577.3	0.00583	0.004674637	0.010504636
397666.283767577.28	397666.28	3767577.3	0.005027974	0.004420383	0.009448357
397766.283767577.28	397766.28	3767577.3	0.004328517	0.004252345	0.008580861
397866.283767577.28	397866.28	3767577.3	0.003752996	0.004042378	0.007795374
396166.283767677.28	396166.28	3767677.3	0.005558622	0.005759321	0.011317943
396266.283767677.28	396266.28	3767677.3	0.006390563	0.005449159	0.011839722
396366.283767677.28	396366.28	3767677.3	0.0075993	0.005806579	0.013405879
396466.283767677.28	396466.28	3767677.3	0.00911859	0.006868108	0.015986698
396566.283767677.28	396566.28	3767677.3	0.010585884	0.006930403	0.017516286
396666.283767677.28	396666.28	3767677.3	0.011507572	0.006492077	0.017999649
396766.283767677.28	396766.28	3767677.3	0.012920733	0.006758445	0.019679178
396866.283767677.28	396866.28	3767677.3	0.014370932	0.007138223	0.021509155
396966.283767677.28	396966.28	3767677.3	0.015143042	0.007215931	0.022358973
397066.283767677.28	397066.28	3767677.3	0.014450707	0.007194209	0.021644916
397166.283767677.28	397166.28	3767677.3	0.013326731	0.007035072	0.020361804
397266.283767677.28	397266.28	3767677.3	0.012053177	0.006451499	0.018504677
397366.283767677.28	397366.28	3767677.3	0.009988282	0.006562533	0.016550815
397466.283767677.28	397466.28	3767677.3	0.008617858	0.005644134	0.014261992
397566.283767677.28	397566.28	3767677.3	0.007112101	0.005415174	0.012527276
397666.283767677.28	397666.28	3767677.3	0.005904789	0.005099679	0.011004468
397766.283767677.28	397766.28	3767677.3	0.00495176	0.004760481	0.009712242
397866.283767677.28	397866.28	3767677.3	0.004181075	0.00453029	0.008711365
396166.283767777.28	396166.28	3767777.3	0.006144827	0.006463757	0.012608584
396266.283767777.28	396266.28	3767777.3	0.007510265	0.007342826	0.014853091
396366.283767777.28	396366.28	3767777.3	0.009090811	0.007146408	0.016237219

Max GLC for Chronic Calcs

Max GLC: 0.005539

XY	X	Y	2025	2026	2027	2034	2035
396166.283767377.28	396166.28	3767377.3	1.764E-05	4.678E-05	2.913E-05	0	0
396266.283767377.28	396266.28	3767377.3	1.878E-05	4.932E-05	3.053E-05	0	0
396366.283767377.28	396366.28	3767377.3	2.056E-05	5.336E-05	3.279E-05	0	0
396466.283767377.28	396466.28	3767377.3	2.193E-05	5.641E-05	3.448E-05	0	0
396566.283767377.28	396566.28	3767377.3	2.382E-05	6.139E-05	3.757E-05	0	0
396666.283767377.28	396666.28	3767377.3	2.397E-05	6.095E-05	3.698E-05	0	0
396766.283767377.28	396766.28	3767377.3	2.387E-05	6.069E-05	3.682E-05	0	0
396866.283767377.28	396866.28	3767377.3	2.395E-05	6.087E-05	3.692E-05	0	0
396966.283767377.28	396966.28	3767377.3	2.459E-05	6.232E-05	3.773E-05	0	0
397066.283767377.28	397066.28	3767377.3	2.453E-05	6.186E-05	3.733E-05	0	0
397166.283767377.28	397166.28	3767377.3	2.358E-05	5.979E-05	3.621E-05	0	0
397266.283767377.28	397266.28	3767377.3	2.215E-05	5.695E-05	3.48E-05	0	0
397366.283767377.28	397366.28	3767377.3	2.107E-05	5.421E-05	3.314E-05	0	0
397466.283767377.28	397466.28	3767377.3	1.962E-05	5.01E-05	3.048E-05	0	0
397566.283767377.28	397566.28	3767377.3	1.809E-05	4.686E-05	2.877E-05	0	0
397666.283767377.28	397666.28	3767377.3	1.659E-05	4.356E-05	2.697E-05	0	0
397766.283767377.28	397766.28	3767377.3	1.512E-05	4.095E-05	2.583E-05	0	0
397866.283767377.28	397866.28	3767377.3	1.378E-05	3.775E-05	2.397E-05	0	0
396166.283767477.28	396166.28	3767477.3	2.017E-05	5.356E-05	3.339E-05	0	0
396266.283767477.28	396266.28	3767477.3	2.128E-05	5.548E-05	3.42E-05	0	0
396366.283767477.28	396366.28	3767477.3	2.394E-05	6.15E-05	3.755E-05	0	0
396466.283767477.28	396466.28	3767477.3	2.655E-05	6.8E-05	4.145E-05	0	0
396566.283767477.28	396566.28	3767477.3	2.842E-05	7.196E-05	4.354E-05	0	0
396666.283767477.28	396666.28	3767477.3	2.928E-05	7.324E-05	4.396E-05	0	0
396766.283767477.28	396766.28	3767477.3	2.989E-05	7.456E-05	4.468E-05	0	0
396866.283767477.28	396866.28	3767477.3	3.027E-05	7.541E-05	4.514E-05	0	0
396966.283767477.28	396966.28	3767477.3	3.109E-05	7.726E-05	4.618E-05	0	0
397066.283767477.28	397066.28	3767477.3	3.104E-05	7.688E-05	4.584E-05	0	0
397166.283767477.28	397166.28	3767477.3	2.966E-05	7.366E-05	4.4E-05	0	0
397266.283767477.28	397266.28	3767477.3	2.756E-05	6.95E-05	4.194E-05	0	0
397366.283767477.28	397366.28	3767477.3	2.552E-05	6.499E-05	3.947E-05	0	0
397466.283767477.28	397466.28	3767477.3	2.345E-05	5.948E-05	3.603E-05	0	0
397566.283767477.28	397566.28	3767477.3	2.118E-05	5.43E-05	3.312E-05	0	0
397666.283767477.28	397666.28	3767477.3	1.907E-05	4.981E-05	3.074E-05	0	0
397766.283767477.28	397766.28	3767477.3	1.716E-05	4.572E-05	2.856E-05	0	0
397866.283767477.28	397866.28	3767477.3	1.547E-05	4.19E-05	2.643E-05	0	0
396166.283767577.28	396166.28	3767577.3	2.212E-05	5.818E-05	3.606E-05	0	0
396266.283767577.28	396266.28	3767577.3	2.435E-05	6.303E-05	3.868E-05	0	0
396366.283767577.28	396366.28	3767577.3	2.748E-05	6.994E-05	4.246E-05	0	0
396466.283767577.28	396466.28	3767577.3	3.116E-05	7.824E-05	4.708E-05	0	0
396566.283767577.28	396566.28	3767577.3	3.526E-05	8.82E-05	5.294E-05	0	0
396666.283767577.28	396666.28	3767577.3	3.833E-05	9.46E-05	5.627E-05	0	0
396766.283767577.28	396766.28	3767577.3	3.822E-05	9.336E-05	5.514E-05	0	0
396866.283767577.28	396866.28	3767577.3	4.02E-05	9.774E-05	5.755E-05	0	0
396966.283767577.28	396966.28	3767577.3	4.092E-05	9.943E-05	5.851E-05	0	0
397066.283767577.28	397066.28	3767577.3	4.056E-05	9.871E-05	5.815E-05	0	0
397166.283767577.28	397166.28	3767577.3	3.884E-05	9.462E-05	5.578E-05	0	0
397266.283767577.28	397266.28	3767577.3	3.553E-05	8.778E-05	5.225E-05	0	0
397366.283767577.28	397366.28	3767577.3	3.193E-05	8.016E-05	4.823E-05	0	0
397466.283767577.28	397466.28	3767577.3	2.865E-05	7.183E-05	4.318E-05	0	0
397566.283767577.28	397566.28	3767577.3	2.519E-05	6.408E-05	3.889E-05	0	0
397666.283767577.28	397666.28	3767577.3	2.211E-05	5.716E-05	3.506E-05	0	0
397766.283767577.28	397766.28	3767577.3	1.947E-05	5.14E-05	3.193E-05	0	0
397866.283767577.28	397866.28	3767577.3	1.723E-05	4.63E-05	2.907E-05	0	0
396166.283767677.28	396166.28	3767677.3	2.529E-05	6.746E-05	4.217E-05	0	0
396266.283767677.28	396266.28	3767677.3	2.793E-05	7.183E-05	4.39E-05	0	0
396366.283767677.28	396366.28	3767677.3	3.256E-05	8.213E-05	4.957E-05	0	0
396466.283767677.28	396466.28	3767677.3	3.897E-05	9.806E-05	5.909E-05	0	0
396566.283767677.28	396566.28	3767677.3	4.422E-05	0.0001087	6.453E-05	0	0
396666.283767677.28	396666.28	3767677.3	4.705E-05	0.0001131	6.608E-05	0	0
396766.283767677.28	396766.28	3767677.3	5.231E-05	0.0001244	7.212E-05	0	0
396866.283767677.28	396866.28	3767677.3	5.781E-05	0.0001365	7.873E-05	0	0
396966.283767677.28	396966.28	3767677.3	6.062E-05	0.0001424	8.177E-05	0	0
397066.283767677.28	397066.28	3767677.3	5.815E-05	0.0001374	7.923E-05	0	0
397166.283767677.28	397166.28	3767677.3	5.402E-05	0.0001287	7.463E-05	0	0
397266.283767677.28	397266.28	3767677.3	4.894E-05	0.0001168	6.785E-05	0	0
397366.283767677.28	397366.28	3767677.3	4.175E-05	0.0001027	6.098E-05	0	0
397466.283767677.28	397466.28	3767677.3	3.6E-05	8.854E-05	5.254E-05	0	0
397566.283767677.28	397566.28	3767677.3	3.045E-05	7.677E-05	4.632E-05	0	0
397666.283767677.28	397666.28	3767677.3	2.587E-05	6.669E-05	4.082E-05	0	0
397766.283767677.28	397766.28	3767677.3	2.217E-05	5.829E-05	3.612E-05	0	0
397866.283767677.28	397866.28	3767677.3	1.922E-05	5.171E-05	3.249E-05	0	0
396166.283767777.28	396166.28	3767777.3	2.805E-05	7.505E-05	4.699E-05	0	0
396266.283767777.28	396266.28	3767777.3	3.374E-05	8.9E-05	5.526E-05	0	0
396366.283767777.28	396366.28	3767777.3	3.914E-05	9.923E-05	6.008E-05	0	0

Garvey Reservoir Rehab - Mitigated Reservoir Cover and Liner Work

Cancer Risk Summary & Maximum Annual GLC for Chronic Calculations

Cancer Risk Summary

Max Risk: 1.090427

XY	X	Y	Offroad Risk	Haul Risk	Total Risk
396466.283767777.28	396466.28	3767777.3	0.011179212	0.007544706	0.018723918
396566.283767777.28	396566.28	3767777.3	0.013281146	0.007143244	0.020424389
396666.283767777.28	396666.28	3767777.3	0.015977832	0.00751252	0.023490352
396766.283767777.28	396766.28	3767777.3	0.0196596	0.008234425	0.027894025
396866.283767777.28	396866.28	3767777.3	0.023307891	0.008793689	0.03210158
396966.283767777.28	396966.28	3767777.3	0.025309393	0.008685873	0.033995266
397066.283767777.28	397066.28	3767777.3	0.024224593	0.008697787	0.03292238
397166.283767777.28	397166.28	3767777.3	0.021292142	0.008709669	0.030001811
397266.283767777.28	397266.28	3767777.3	0.018168801	0.008103454	0.026272255
397366.283767777.28	397366.28	3767777.3	0.014138017	0.007946324	0.022084341
397466.283767777.28	397466.28	3767777.3	0.011268247	0.006857435	0.018125682
397566.283767777.28	397566.28	3767777.3	0.008794503	0.006325639	0.015120143
397666.283767777.28	397666.28	3767777.3	0.006944003	0.006019977	0.012963981
397766.283767777.28	397766.28	3767777.3	0.005656916	0.00537503	0.011031946
397866.283767777.28	397866.28	3767777.3	0.004683944	0.004900381	0.009584324
396166.283767877.28	396166.28	3767877.3	0.006692569	0.007143619	0.013836188
396266.283767877.28	396266.28	3767877.3	0.008456171	0.008251005	0.016707176
396366.283767877.28	396366.28	3767877.3	0.010793869	0.00872198	0.019515849
396466.283767877.28	396466.28	3767877.3	0.013704951	0.008276267	0.021981219
396566.283767877.28	396566.28	3767877.3	0.017538435	0.008191361	0.025729796
397466.283767877.28	397466.28	3767877.3	0.014763397	0.009603711	0.024367108
397566.283767877.28	397566.28	3767877.3	0.010893588	0.007564321	0.018457909
397666.283767877.28	397666.28	3767877.3	0.008231091	0.006376529	0.014607619
397766.283767877.28	397766.28	3767877.3	0.006441847	0.005644297	0.012086145
397866.283767877.28	397866.28	3767877.3	0.005144788	0.005653654	0.010798442
396166.283767977.28	396166.28	3767977.3	0.007070789	0.007487709	0.014558498
396266.283767977.28	396266.28	3767977.3	0.009261758	0.008652815	0.017914573
396366.283767977.28	396366.28	3767977.3	0.012364443	0.009358936	0.021723379
396466.283767977.28	396466.28	3767977.3	0.016593241	0.008992087	0.025585328
397466.283767977.28	397466.28	3767977.3	0.020720895	0.011326332	0.032047227
397566.283767977.28	397566.28	3767977.3	0.013483433	0.00914671	0.022630142
397666.283767977.28	397666.28	3767977.3	0.00956875	0.007592159	0.017160908
397766.283767977.28	397766.28	3767977.3	0.007104978	0.00764775	0.014752729
397866.283767977.28	397866.28	3767977.3	0.00548312	0.006993713	0.012476833
396166.283768077.28	396166.28	3768077.3	0.007617819	0.010094094	0.017711913
396266.283768077.28	396266.28	3768077.3	0.009886426	0.00956646	0.019452886
396366.283768077.28	396366.28	3768077.3	0.013752674	0.010381281	0.024133955
396466.283768077.28	396466.28	3768077.3	0.020364043	0.011238031	0.031602074
397466.283768077.28	397466.28	3768077.3	0.02774966	0.019655455	0.047405114
397566.283768077.28	397566.28	3768077.3	0.015974271	0.015532905	0.031507176
397666.283768077.28	397666.28	3768077.3	0.010747571	0.011653507	0.022401077
397766.283768077.28	397766.28	3768077.3	0.007892759	0.009098965	0.016991723
397866.283768077.28	397866.28	3768077.3	0.005996673	0.007886711	0.013883384
396166.283768177.28	396166.28	3768177.3	0.007860706	0.012173958	0.020034664
396266.283768177.28	396266.28	3768177.3	0.010502547	0.012573823	0.02307637
396366.283768177.28	396366.28	3768177.3	0.015170821	0.01368808	0.0288589
396466.283768177.28	396466.28	3768177.3	0.023570721	0.013478084	0.037048806
397466.283768177.28	397466.28	3768177.3	0.032979209	0.042986028	0.075965237
397566.283768177.28	397566.28	3768177.3	0.018232906	0.022549299	0.040782205
397666.283768177.28	397666.28	3768177.3	0.011807441	0.015387998	0.027195439
397766.283768177.28	397766.28	3768177.3	0.008577258	0.011347442	0.019924701
397866.283768177.28	397866.28	3768177.3	0.006363496	0.009311049	0.015674545
396166.283768277.28	396166.28	3768277.3	0.007872102	0.014478838	0.022350941
396266.283768277.28	396266.28	3768277.3	0.010393568	0.014248284	0.024641853
396366.283768277.28	396366.28	3768277.3	0.015244185	0.01599446	0.031238645
396466.283768277.28	396466.28	3768277.3	0.024804388	0.016551345	0.041355733
397366.283768277.28	397366.28	3768277.3	0.072069767	0.341642319	0.413712086
397466.283768277.28	397466.28	3768277.3	0.0342549	0.067064574	0.101319473
397566.283768277.28	397566.28	3768277.3	0.020117595	0.030617051	0.050734646
397666.283768277.28	397666.28	3768277.3	0.012838108	0.019184192	0.0320223
397766.283768277.28	397766.28	3768277.3	0.009047362	0.013742365	0.022789727
397866.283768277.28	397866.28	3768277.3	0.0069148	0.010579513	0.017494313
396166.283768377.28	396166.28	3768377.3	0.0075993	0.017063496	0.024662796
396266.283768377.28	396266.28	3768377.3	0.010007513	0.017767487	0.027775
396366.283768377.28	396366.28	3768377.3	0.014429339	0.019837313	0.034266651
396466.283768377.28	396466.28	3768377.3	0.023255182	0.021402135	0.044657317
397266.283768377.28	397266.28	3768377.3	0.089465746	0.536338257	0.625804003
397366.283768377.28	397366.28	3768377.3	0.05433047	0.241228505	0.295558975
397466.283768377.28	397466.28	3768377.3	0.032558964	0.077838801	0.110397765
397566.283768377.28	397566.28	3768377.3	0.020921758	0.037368793	0.058290551
397666.283768377.28	397666.28	3768377.3	0.014063228	0.022650771	0.036713999
397766.283768377.28	397766.28	3768377.3	0.009929163	0.015923851	0.025853014
397866.283768377.28	397866.28	3768377.3	0.007607135	0.011454607	0.019061742
396166.283768477.28	396166.28	3768477.3	0.007118512	0.020934605	0.028053116
396266.283768477.28	396266.28	3768477.3	0.009354354	0.022561023	0.031915377

Max GLC for Chronic Calcs

Max GLC: 0.005539

XY	X	Y	2025	2026	2027	2034	2035
396466.283767777.28	396466.28	3767777.3	4.692E-05	0.0001159	6.903E-05	0	0
396566.283767777.28	396566.28	3767777.3	5.396E-05	0.0001289	7.49E-05	0	0
396666.283767777.28	396666.28	3767777.3	6.387E-05	0.0001497	8.588E-05	0	0
396766.283767777.28	396766.28	3767777.3	7.76E-05	0.0001793	0.0001017	0	0
396866.283767777.28	396866.28	3767777.3	9.105E-05	0.0002079	0.0001168	0	0
396966.283767777.28	396966.28	3767777.3	9.803E-05	0.0002215	0.0001235	0	0
397066.283767777.28	397066.28	3767777.3	9.42E-05	0.0002139	0.0001197	0	0
397166.283767777.28	397166.28	3767777.3	8.384E-05	0.0001932	0.0001094	0	0
397266.283767777.28	397266.28	3767777.3	7.219E-05	0.0001681	9.594E-05	0	0
397366.283767777.28	397366.28	3767777.3	5.778E-05	0.0001388	8.107E-05	0	0
397466.283767777.28	397466.28	3767777.3	4.656E-05	0.0001132	6.666E-05	0	0
397566.283767777.28	397566.28	3767777.3	3.729E-05	9.312E-05	5.583E-05	0	0
397666.283767777.28	397666.28	3767777.3	3.045E-05	7.853E-05	4.809E-05	0	0
397766.283767777.28	397766.28	3767777.3	2.526E-05	6.628E-05	4.101E-05	0	0
397866.283767777.28	397866.28	3767777.3	2.136E-05	5.707E-05	3.572E-05	0	0
396166.283767877.28	396166.28	3767877.3	3.066E-05	8.224E-05	5.159E-05	0	0
396266.283767877.28	396266.28	3767877.3	3.798E-05	0.0001001	6.215E-05	0	0
396366.283767877.28	396366.28	3767877.3	4.671E-05	0.000119	7.226E-05	0	0
396466.283767877.28	396466.28	3767877.3	5.657E-05	0.0001374	8.082E-05	0	0
396566.283767877.28	396566.28	3767877.3	7.005E-05	0.0001641	9.405E-05	0	0
397466.283767877.28	397466.28	3767877.3	6.161E-05	0.0001514	8.975E-05	0	0
397566.283767877.28	397566.28	3767877.3	4.593E-05	0.000114	6.809E-05	0	0
397666.283767877.28	397666.28	3767877.3	3.535E-05	8.938E-05	5.403E-05	0	0
397766.283767877.28	397766.28	3767877.3	2.83E-05	7.315E-05	4.484E-05	0	0
397866.283767877.28	397866.28	3767877.3	2.372E-05	6.401E-05	4.029E-05	0	0
396166.283767977.28	396166.28	3767977.3	3.233E-05	8.66E-05	5.427E-05	0	0
396266.283767977.28	396266.28	3767977.3	4.122E-05	0.0001078	6.657E-05	0	0
396366.283767977.28	396366.28	3767977.3	5.289E-05	0.0001332	8.031E-05	0	0
396466.283767977.28	396466.28	3767977.3	6.749E-05	0.0001613	9.384E-05	0	0
397466.283767977.28	397466.28	3767977.3	8.437E-05	0.0002019	0.0001176	0	0
397566.283767977.28	397566.28	3767977.3	5.664E-05	0.0001401	8.344E-05	0	0
397666.283767977.28	397666.28	3767977.3	4.127E-05	0.0001048	6.352E-05	0	0
397766.283767977.28	397766.28	3767977.3	3.261E-05	8.762E-05	5.502E-05	0	0
397866.283767977.28	397866.28	3767977.3	2.623E-05	7.295E-05	4.672E-05	0	0
396166.283768077.28	396166.28	3768077.3	3.681E-05	0.0001032	6.639E-05	0	0
396266.283768077.28	396266.28	3768077.3	4.432E-05	0.0001167	7.235E-05	0	0
396366.283768077.28	396366.28	3768077.3	5.88E-05	0.000148	8.922E-05	0	0
396466.283768077.28	396466.28	3768077.3	8.302E-05	0.000199	0.000116	0	0
397466.283768077.28	397466.28	3768077.3	0.0001174	0.0002923	0.000175	0	0
397566.283768077.28	397566.28	3768077.3	7.169E-05	0.0001889	0.0001172	0	0
397666.283768077.28	397666.28	3768077.3	4.941E-05	0.000133	8.355E-05	0	0
397766.283768077.28	397766.28	3768077.3	3.681E-05	0.0001003	6.347E-05	0	0
397866.283768077.28	397866.28	3768077.3	2.892E-05	8.095E-05	5.203E-05	0	0
396166.283768177.28	396166.28	3768177.3	3.97E-05	0.0001151	7.537E-05	0	0
396266.283768177.28	396266.28	3768177.3	4.944E-05	0.0001357	8.628E-05	0	0
396366.283768177.28	396366.28	3768177.3	6.704E-05	0.0001742	0.0001072	0	0
396466.283768177.28	396466.28	3768177.3	9.655E-05	0.0002326	0.000136	0	0
397466.283768177.28	397466.28	3768177.3	0.0001587	0.0004433	0.0002846	0	0
397566.283768177.28	397566.28	3768177.3	8.653E-05	0.0002391	0.0001526	0	0
397666.283768177.28	397666.28	3768177.3	5.68E-05	0.0001587	0.0001019	0	0
397766.283768177.28	397766.28	3768177.3	4.143E-05	0.0001161	7.468E-05	0	0
397866.283768177.28	397866.28	3768177.3	3.161E-05	9.05E-05	5.889E-05	0	0
396166.283768277.28	396166.28	3768277.3	4.199E-05	0.0001264	8.442E-05	0	0
396266.283768277.28	396266.28	3768277.3	5.069E-05	0.0001431	9.244E-05	0	0
396366.283768277.28	396366.28	3768277.3	6.955E-05	0.000186	0.0001164	0	0
396466.283768277.28	396466.28	3768277.3	0.0001039	0.0002563	0.0001524	0	0
397366.283768277.28	397366.28	3768277.3	0.0005887	0.0021785	0.0015898	0	0
397466.283768277.28	397466.28	3768277.3	0.0001867	0.0005699	0.0003832	0	0
397566.283768277.28	397566.28	3768277.3	0.0001011	0.0002919	0.0001908	0	0
397666.283768277.28	397666.28	3768277.3	6.416E-05	0.0001845	0.0001204	0	0
397766.283768277.28	397766.28	3768277.3	4.543E-05	0.0001311	8.57E-05	0	0
397866.283768277.28	397866.28	3768277.3	3.48E-05	0.0001006	6.58E-05	0	0
396166.283768377.28	396166.28	3768377.3	4.355E-05	0.0001371	9.355E-05	0	0
396266.283768377.28	396266.28	3768377.3	5.276E-05	0.0001576	0.0001048	0	0
396366.283768377.28	396366.28	3768377.3	7.043E-05	0.000199	0.0001286	0	0
396466.283768377.28	396466.28	3768377.3	0.0001032	0.0002691	0.0001659	0	0
397266.283768377.28	397266.28	3768377.3	0.0008404	0.0032524	0.002412	0	0
397366.283768377.28	397366.28	3768377.3	0.0004278	0.0015625	0.0011347	0	0
397466.283768377.28	397466.28	3768377.3	0.0001912	0.0006105	0.0004193	0	0
397566.283768377.28	397566.28	3768377.3	0.0001105	0.0003305	0.00022	0	0
397666.283768377.28	397666.28	3768377.3	7.188E-05	0.0002101	0.0001383	0	0
397766.283768377.28	397766.28	3768377.3	5.068E-05	0.000148	9.734E-05	0	0
397866.283768377.28	397866.28	3768377.3	3.81E-05	0.0001098	7.167E-05	0	0
396166.283768477.28	396166.28	3768477.3	4.563E-05	0.0001526	0.000107	0	0
396266.283768477.28	396266.28	3768477.3	5.513E-05	0.0001764	0.0001212	0	0

Garvey Reservoir Rehab - Mitigated Reservoir Cover and Liner Work

Cancer Risk Summary & Maximum Annual GLC for Chronic Calculations

Cancer Risk Summary

Max Risk: 1.090427

XY	X	Y	Offroad Risk	Haul Risk	Total Risk
396366.283768477.28	396366.28	3768477.3	0.013202083	0.025006821	0.038208903
396466.283768477.28	396466.28	3768477.3	0.019665298	0.028001841	0.047667139
397166.283768477.28	397166.28	3768477.3	0.067093789	0.099683659	0.166777449
397266.283768477.28	397266.28	3768477.3	0.056797091	0.544412923	0.601210014
397366.283768477.28	397366.28	3768477.3	0.042119167	0.220566465	0.262685632
397466.283768477.28	397466.28	3768477.3	0.029226213	0.071733545	0.100959758
397566.283768477.28	397566.28	3768477.3	0.019514295	0.042878817	0.062393113
397666.283768477.28	397666.28	3768477.3	0.013791137	0.026607508	0.040398646
397766.283768477.28	397766.28	3768477.3	0.010496849	0.016833413	0.027330262
397866.283768477.28	397866.28	3768477.3	0.007867829	0.013122748	0.020990576
396166.283768577.28	396166.28	3768577.3	0.006363496	0.026638299	0.033001795
396266.283768577.28	396266.28	3768577.3	0.008419132	0.030027896	0.038447028
396366.283768577.28	396366.28	3768577.3	0.011382923	0.032396275	0.043779198
396466.283768577.28	396466.28	3768577.3	0.015987092	0.038901595	0.054888687
396566.283768577.28	396566.28	3768577.3	0.025293011	0.038098501	0.063391512
396866.283768577.28	396866.28	3768577.3	0.066885092	0.048754686	0.115639778
396966.283768577.28	396966.28	3768577.3	0.061275898	0.056610744	0.117886642
397066.283768577.28	397066.28	3768577.3	0.052229961	0.069964966	0.122194926
397166.283768577.28	397166.28	3768577.3	0.045420578	0.119790473	0.165211051
397266.283768577.28	397266.28	3768577.3	0.038354775	0.528120364	0.566475139
397366.283768577.28	397366.28	3768577.3	0.031801812	0.221208052	0.253009865
397466.283768577.28	397466.28	3768577.3	0.024386993	0.070879892	0.095266885
397566.283768577.28	397566.28	3768577.3	0.018045577	0.042428864	0.060474441
397666.283768577.28	397666.28	3768577.3	0.013385138	0.028207121	0.041592259
397766.283768577.28	397766.28	3768577.3	0.010054524	0.020073139	0.030127663
397866.283768577.28	397866.28	3768577.3	0.007855008	0.0146562	0.022511208
396166.283768677.28	396166.28	3768677.3	0.005736691	0.046796857	0.052533548
396266.283768677.28	396266.28	3768677.3	0.007255981	0.053427498	0.060683479
396366.283768677.28	396366.28	3768677.3	0.009627869	0.051878667	0.061506536
396466.283768677.28	396466.28	3768677.3	0.012764744	0.063690653	0.076455397
396566.283768677.28	396566.28	3768677.3	0.018039166	0.064385537	0.082424703
396666.283768677.28	396666.28	3768677.3	0.025322927	0.065734615	0.091057541
396766.283768677.28	396766.28	3768677.3	0.032779771	0.068215105	0.100994876
396866.283768677.28	396866.28	3768677.3	0.037568419	0.075758462	0.113326882
396966.283768677.28	396966.28	3768677.3	0.037774268	0.082925795	0.120700063
397066.283768677.28	397066.28	3768677.3	0.035523468	0.096193144	0.131716612
397166.283768677.28	397166.28	3768677.3	0.031927886	0.150977052	0.182904938
397366.283768677.28	397366.28	3768677.3	0.024528024	0.200767423	0.225295446
397466.283768677.28	397466.28	3768677.3	0.019985111	0.080890054	0.100875165
397566.283768677.28	397566.28	3768677.3	0.015846773	0.044111839	0.059958612
397666.283768677.28	397666.28	3768677.3	0.012417864	0.028901368	0.041319232
397766.283768677.28	397766.28	3768677.3	0.009660634	0.021317175	0.030977809
397866.283768677.28	397866.28	3768677.3	0.007725373	0.015652973	0.023378346
396166.283768777.28	396166.28	3768777.3	0.005223139	0.135884725	0.141107863
396266.283768777.28	396266.28	3768777.3	0.006366346	0.168846426	0.175212772
396366.283768777.28	396366.28	3768777.3	0.008157014	0.123783358	0.131940372
396466.283768777.28	396466.28	3768777.3	0.010399267	0.161750232	0.172149498
396566.283768777.28	396566.28	3768777.3	0.013301802	0.173212914	0.186514716
396666.283768777.28	396666.28	3768777.3	0.017202951	0.173152164	0.190355115
396766.283768777.28	396766.28	3768777.3	0.021402546	0.179116834	0.20051938
396866.283768777.28	396866.28	3768777.3	0.024479589	0.186223169	0.210702758
396966.283768777.28	396966.28	3768777.3	0.025552993	0.190815731	0.216368724
397066.283768777.28	397066.28	3768777.3	0.025102833	0.205568442	0.230671275
397166.283768777.28	397166.28	3768777.3	0.023446073	0.24755512	0.271001193
397266.283768777.28	397266.28	3768777.3	0.021708113	0.789579025	0.811287138
397366.283768777.28	397366.28	3768777.3	0.019081942	0.27434406	0.293426002
397466.283768777.28	397466.28	3768777.3	0.016094646	0.096492833	0.112587479
397566.283768777.28	397566.28	3768777.3	0.013311774	0.051751646	0.06506342
397666.283768777.28	397666.28	3768777.3	0.010920655	0.032547586	0.043468241
397766.283768777.28	397766.28	3768777.3	0.008925562	0.022282443	0.031208005
397866.283768777.28	397866.28	3768777.3	0.007361399	0.016220202	0.023581601
396166.283768877.28	396166.28	3768877.3	0.004654028	0.547086047	0.551740075
396266.283768877.28	396266.28	3768877.3	0.00563626	0.704587189	0.710223449
396366.283768877.28	396366.28	3768877.3	0.006799411	0.689931655	0.696731066
396466.283768877.28	396466.28	3768877.3	0.00858082	0.760012562	0.768593381
396566.283768877.28	396566.28	3768877.3	0.010541722	0.716797291	0.727339013
396666.283768877.28	396666.28	3768877.3	0.012798933	0.778758287	0.79155722
396766.283768877.28	396766.28	3768877.3	0.01537382	0.753719782	0.769093602
396866.283768877.28	396866.28	3768877.3	0.018000703	0.732162188	0.750162891
396966.283768877.28	396966.28	3768877.3	0.01896869	0.704034357	0.723003046
397066.283768877.28	397066.28	3768877.3	0.01869375	0.711761464	0.730455214
397166.283768877.28	397166.28	3768877.3	0.017939447	0.731546029	0.749485476
397266.283768877.28	397266.28	3768877.3	0.016889549	0.76854799	0.785437538
397366.283768877.28	397366.28	3768877.3	0.015154438	0.377888182	0.39304262
397466.283768877.28	397466.28	3768877.3	0.013286844	0.101129876	0.11441672

Max GLC for Chronic Calcs

Max GLC: 0.005539

XY	X	Y	2025	2026	2027	2034	2035
396366.283768477.28	396366.28	3768477.3	7.113E-05	0.0002155	0.0001444	0	0
396466.283768477.28	396466.28	3768477.3	9.692E-05	0.0002759	0.000179	0	0
397166.283768477.28	397166.28	3768477.3	0.0003347	0.0009616	0.0006268	0	0
397266.283768477.28	397266.28	3768477.3	0.0007327	0.0030607	0.002328	0	0
397366.283768477.28	397366.28	3768477.3	0.0003645	0.0013752	0.0010108	0	0
397466.283768477.28	397466.28	3768477.3	0.0001735	0.0005571	0.0003837	0	0
397566.283768477.28	397566.28	3768477.3	0.0001109	0.0003475	0.0002366	0	0
397666.283768477.28	397666.28	3768477.3	7.478E-05	0.0002275	0.0001527	0	0
397766.283768477.28	397766.28	3768477.3	5.358E-05	0.0001565	0.0001029	0	0
397866.283768477.28	397866.28	3768477.3	4.065E-05	0.0001198	7.911E-05	0	0
396166.283768577.28	396166.28	3768577.3	4.853E-05	0.0001751	0.0001266	0	0
396266.283768577.28	396266.28	3768577.3	5.912E-05	0.0002062	0.0001471	0	0
396366.283768577.28	396366.28	3768577.3	7.191E-05	0.0002388	0.0001668	0	0
396466.283768577.28	396466.28	3768577.3	9.456E-05	0.0003031	0.0002086	0	0
396566.283768577.28	396566.28	3768577.3	0.0001267	0.000365	0.0002383	0	0
396866.283768577.28	396866.28	3768577.3	0.0002843	0.0007114	0.0004271	0	0
396966.283768577.28	396966.28	3768577.3	0.0002721	0.00071	0.000438	0	0
397066.283768577.28	397066.28	3768577.3	0.0002531	0.0007113	0.0004581	0	0
397166.283768577.28	397166.28	3768577.3	0.0002777	0.0009064	0.0006287	0	0
397266.283768577.28	397266.28	3768577.3	0.0006515	0.0028506	0.0021991	0	0
397366.283768577.28	397366.28	3768577.3	0.0003286	0.0013054	0.0009768	0	0
397466.283768577.28	397466.28	3768577.3	0.0001555	0.0005187	0.0003632	0	0
397566.283768577.28	397566.28	3768577.3	0.0001053	0.0003349	0.0002296	0	0
397666.283768577.28	397666.28	3768577.3	7.491E-05	0.0002325	0.0001576	0	0
397766.283768577.28	397766.28	3768577.3	5.518E-05	0.0001692	0.000114	0	0
397866.283768577.28	397866.28	3768577.3	4.211E-05	0.0001272	8.505E-05	0	0
396166.283768677.28	396166.28	3768677.3	6.601E-05	0.0002691	0.0002031	0	0
396266.283768677.28	396266.28	3768677.3	7.786E-05	0.0003123	0.0002344	0	0
396366.283768677.28	396366.28	3768677.3	8.474E-05	0.0003215	0.0002368	0	0
396466.283768677.28	396466.28	3768677.3	0.0001074	0.0004014	0.000294	0	0
396566.283768677.28	396566.28	3768677.3	0.0001267	0.0004421	0.0003154	0	0
396666.283768677.28	396666.28	3768677.3	0.0001538	0.0005002	0.0003464	0	0
396766.283768677.28	396766.28	3768677.3	0.0001826	0.0005651	0.0003825	0	0
396866.283768677.28	396866.28	3768677.3	0.0002069	0.0006358	0.0004289	0	0
396966.283768677.28	396966.28	3768677.3	0.0002146	0.0006723	0.0004576	0	0
397066.283768677.28	397066.28	3768677.3	0.0002196	0.0007211	0.0005015	0	0
397166.283768677.28	397166.28	3768677.3	0.0002604	0.0009633	0.0007028	0	0
397366.283768677.28	397366.28	3768677.3	0.0002829	0.0011541	0.0008712	0	0
397466.283768677.28	397466.28	3768677.3	0.0001497	0.0005365	0.0003867	0	0
397566.283768677.28	397566.28	3768677.3	9.915E-05	0.0003276	0.0002284	0	0
397666.283768677.28	397666.28	3768677.3	7.216E-05	0.000229	0.0001569	0	0
397766.283768677.28	397766.28	3768677.3	5.5E-05	0.0001725	0.0001175	0	0
397866.283768677.28	397866.28	3768677.3	4.262E-05	0.0001311	8.849E-05	0	0
396166.283768777.28	396166.28	3768777.3	0.0001512	0.0007006	0.0005494	0	0
396266.283768777.28	396266.28	3768777.3	0.0001874	0.0008697	0.0006822	0	0
396366.283768777.28	396366.28	3768777.3	0.0001498	0.0006623	0.0005125	0	0
396466.283768777.28	396466.28	3768777.3	0.0001948	0.0008635	0.0006688	0	0
396566.283768777.28	396566.28	3768777.3	0.0002162	0.0009401	0.0007238	0	0
396666.283768777.28	396666.28	3768777.3	0.00023	0.0009674	0.0007374	0	0
396766.283768777.28	396766.28	3768777.3	0.0002507	0.0010262	0.0007755	0	0
396866.283768777.28	396866.28	3768777.3	0.0002685	0.0010827	0.0008142	0	0
396966.283768777.28	396966.28	3768777.3	0.0002768	0.0011127	0.0008359	0	0
397066.283768777.28	397066.28	3768777.3	0.0002896	0.0011816	0.000892	0	0
397166.283768777.28	397166.28	3768777.3	0.0003248	0.0013749	0.0010502	0	0
397266.283768777.28	397266.28	3768777.3	0.000848	0.0040098	0.0031617	0	0
397366.283768777.28	397366.28	3768777.3	0.0003355	0.0014749	0.0011394	0	0
397466.283768777.28	397466.28	3768777.3	0.0001512	0.0005851	0.0004339	0	0
397566.283768777.28	397566.28	3768777.3	9.764E-05	0.0003469	0.0002493	0	0
397666.283768777.28	397666.28	3768777.3	7.043E-05	0.0002362	0.0001658	0	0
397766.283768777.28	397766.28	3768777.3	5.334E-05	0.000172	0.0001186	0	0
397866.283768777.28	397866.28	3768777.3	4.189E-05	0.0001313	8.942E-05	0	0
396166.283768877.28	396166.28	3768877.3	0.0005508	0.0027048	0.002154	0	0
396266.283768877.28	396266.28	3768877.3	0.0007082	0.003481	0.0027728	0	0
396366.283768877.28	396366.28	3768877.3	0.000698	0.0034176	0.0027197	0	0
396466.283768877.28	396466.28	3768877.3	0.0007727	0.0037725	0.0029998	0	0
396566.283768877.28	396566.28	3768877.3	0.0007374	0.0035753	0.0028379	0	0
396666.283768877.28	396666.28	3768877.3	0.0008059	0.0038939	0.0030879	0	0
396766.283768877.28	396766.28	3768877.3	0.0007906	0.0037898	0.0029992	0	0
396866.283768877.28	396866.28	3768877.3	0.0007788	0.0037031	0.0029243	0	0
396966.283768877.28	396966.28	3768877.3	0.0007548	0.0035726	0.0028178	0	0
397066.283768877.28	397066.28	3768877.3	0.0007614	0.0036084	0.002847	0	0
397166.283768877.28	397166.28	3768877.3	0.000778	0.0036997	0.0029217	0	0
397266.283768877.28	397266.28	3768877.3	0.0008104	0.0038729	0.0030625	0	0
397366.283768877.28	397366.28	3768877.3	0.0004227	0.0019528	0.00153	0	0
397466.283768877.28	397466.28	3768877.3	0.0001458	0.0005879	0.0004421	0	0

Garvey Reservoir Rehab - Mitigated Reservoir Cover and Liner Work

Cancer Risk Summary & Maximum Annual GLC for Chronic Calculations

Cancer Risk Summary

Max Risk: 1.090427

XY	X	Y	Offroad Risk	Haul Risk	Total Risk
397566.283768877.28	397566.28	3768877.3	0.011403579	0.051712001	0.06311558
397666.283768877.28	397666.28	3768877.3	0.009582995	0.032076431	0.041659427
397766.283768877.28	397766.28	3768877.3	0.008077951	0.02217271	0.030250661
397866.283768877.28	397866.28	3768877.3	0.006867077	0.016410429	0.023277506
3964253767739	396425	3767739	0.009615048	0.00737536	0.016990408
3964753767739	396475	3767739	0.010570214	0.00755157	0.018121784
3965253767739	396525	3767739	0.011373664	0.007038635	0.018412299
3965753767739	396575	3767739	0.012469148	0.007242112	0.01971126
3966253767739	396625	3767739	0.013085269	0.006955438	0.020040707
3966753767739	396675	3767739	0.014152262	0.007117469	0.021269731
3967253767739	396725	3767739	0.015771271	0.007438437	0.023209708
3967753767739	396775	3767739	0.01663669	0.007500957	0.024137647
3968253767739	396825	3767739	0.018046289	0.007923652	0.025969941
3968753767739	396875	3767739	0.019419562	0.008154424	0.027573986
3969253767739	396925	3767739	0.020123293	0.008131906	0.028255199
3969753767739	396975	3767739	0.020401794	0.008077909	0.028479703
3970253767739	397025	3767739	0.020121156	0.008043894	0.02816505
3970753767739	397075	3767739	0.019318419	0.008084965	0.027403384
3971253767739	397125	3767739	0.018305558	0.008094838	0.026400396
3971753767739	397175	3767739	0.017267056	0.007988397	0.025255453
3972253767739	397225	3767739	0.016088235	0.007818883	0.023907118
3972753767739	397275	3767739	0.015061842	0.007374137	0.022435979
3973253767739	397325	3767739	0.013494829	0.007377092	0.020871921
3973753767739	397375	3767739	0.012015427	0.007352641	0.019368068
3974253767739	397425	3767739	0.010776062	0.007155138	0.0179312
3974753767739	397475	3767739	0.009932012	0.006321577	0.016253589
3975253767739	397525	3767739	0.008876415	0.006111087	0.014987502
3964253767789	396425	3767789	0.010586596	0.007878582	0.018465178
3964753767789	396475	3767789	0.01164433	0.007590276	0.019234606
3965253767789	396525	3767789	0.012702775	0.007188694	0.01989147
3965753767789	396575	3767789	0.013857379	0.007275701	0.02113308
3966253767789	396625	3767789	0.015296894	0.007467256	0.02276415
3966753767789	396675	3767789	0.017014197	0.00769147	0.024705668
3967253767789	396725	3767789	0.019300612	0.008296561	0.027597172
3967753767789	396775	3767789	0.021067775	0.008498293	0.029566068
3968253767789	396825	3767789	0.023208172	0.008879045	0.032087217
3968753767789	396875	3767789	0.025029468	0.009005891	0.034035359
3969253767789	396925	3767789	0.026241766	0.009001824	0.03524359
3969753767789	396975	3767789	0.027188384	0.008891039	0.036079424
3970253767789	397025	3767789	0.026980399	0.008841338	0.035821737
3970753767789	397075	3767789	0.025796592	0.008924149	0.034720741
3971253767789	397125	3767789	0.024167611	0.008988671	0.033156282
3971753767789	397175	3767789	0.022383353	0.00894829	0.031331643
3972253767789	397225	3767789	0.020404643	0.008836268	0.029240911
3972753767789	397275	3767789	0.018791332	0.00834712	0.027138452
3973253767789	397325	3767789	0.016644525	0.008144322	0.024788847
3973753767789	397375	3767789	0.014405833	0.008170324	0.022576158
3974253767789	397425	3767789	0.012571716	0.008003053	0.020574769
3974753767789	397475	3767789	0.011387909	0.006973977	0.018361886
3975253767789	397525	3767789	0.009988282	0.00676401	0.016752292
3964253767839	396425	3767839	0.011652877	0.008411512	0.020064389
3964753767839	396475	3767839	0.013072448	0.008357988	0.021430436
3965253767839	396525	3767839	0.014230613	0.007579832	0.021810445
3965753767839	396575	3767839	0.016000625	0.00779748	0.023798105
3966253767839	396625	3767839	0.018079766	0.008032402	0.026112169
3966753767839	396675	3767839	0.021322058	0.008959286	0.030281344
3967253767839	396725	3767839	0.024367761	0.00938556	0.033753321
3967753767839	396775	3767839	0.027473296	0.009631528	0.037104824
3968253767839	396825	3767839	0.03070704	0.00987161	0.04057865
3968753767839	396875	3767839	0.03370787	0.009987511	0.04369538
3969253767839	396925	3767839	0.035923056	0.010017629	0.045940685
3969753767839	396975	3767839	0.037982253	0.009914438	0.047896692
3970253767839	397025	3767839	0.038495094	0.009835311	0.048330405
3970753767839	397075	3767839	0.035955108	0.010047528	0.046002636
3971253767839	397125	3767839	0.033145882	0.010232237	0.043378119
3971753767839	397175	3767839	0.030765447	0.010096984	0.040862431
3972253767839	397225	3767839	0.028106511	0.009707376	0.037813887
3972753767839	397275	3767839	0.024775897	0.009195739	0.033971636
3973253767839	397325	3767839	0.021267925	0.008766907	0.030034832
3973753767839	397375	3767839	0.01770582	0.009119985	0.026825805
3974753767839	397475	3767839	0.012801782	0.008596605	0.021398388
3975253767839	397525	3767839	0.011287478	0.007347189	0.018634667
3964253767889	396425	3767889	0.012778989	0.008894553	0.021673542
3964753767889	396475	3767889	0.014134455	0.007907701	0.022042156
3965253767889	396525	3767889	0.016150204	0.008115524	0.024265727

Max GLC for Chronic Calcs

Max GLC: 0.005539

XY	X	Y	2025	2026	2027	2034	2035
397566.283768877.28	397566.28	3768877.3	9.085E-05	0.0003332	0.0002424	0	0
397666.283768877.28	397666.28	3768877.3	6.523E-05	0.0002245	0.0001592	0	0
397766.283768877.28	397766.28	3768877.3	5.024E-05	0.0001654	0.0001152	0	0
397866.283768877.28	397866.28	3768877.3	4.032E-05	0.0001287	8.841E-05	0	0
3964253767739	396425	3767739	4.122E-05	0.0001041	6.283E-05	0	0
3964753767739	396475	3767739	4.477E-05	0.0001117	6.69E-05	0	0
3965253767739	396525	3767739	4.711E-05	0.0001149	6.774E-05	0	0
3965753767739	396575	3767739	5.119E-05	0.0001236	7.241E-05	0	0
3966253767739	396625	3767739	5.309E-05	0.0001266	7.347E-05	0	0
3966753767739	396675	3767739	5.702E-05	0.0001349	7.788E-05	0	0
3967253767739	396725	3767739	6.306E-05	0.0001479	8.486E-05	0	0
3967753767739	396775	3767739	6.618E-05	0.0001543	8.816E-05	0	0
3968253767739	396825	3767739	7.158E-05	0.0001664	9.48E-05	0	0
3968753767739	396875	3767739	7.667E-05	0.0001772	0.0001006	0	0
3969253767739	396925	3767739	7.914E-05	0.0001821	0.000103	0	0
3969753767739	396975	3767739	8.007E-05	0.0001838	0.0001037	0	0
3970253767739	397025	3767739	7.904E-05	0.0001817	0.0001026	0	0
3970753767739	397075	3767739	7.624E-05	0.0001762	9.993E-05	0	0
3971253767739	397125	3767739	7.267E-05	0.0001691	9.639E-05	0	0
3971753767739	397175	3767739	6.889E-05	0.0001612	9.23E-05	0	0
3972253767739	397225	3767739	6.456E-05	0.000152	8.747E-05	0	0
3972753767739	397275	3767739	6.049E-05	0.0001426	8.21E-05	0	0
3973253767739	397325	3767739	5.495E-05	0.0001315	7.657E-05	0	0
3973753767739	397375	3767739	4.969E-05	0.0001209	7.124E-05	0	0
3974253767739	397425	3767739	4.511E-05	0.0001112	6.608E-05	0	0
3974753767739	397475	3767739	4.131E-05	0.0001011	5.984E-05	0	0
3975253767739	397525	3767739	3.737E-05	9.265E-05	5.528E-05	0	0
3964253767789	396425	3767789	4.515E-05	0.0001134	6.824E-05	0	0
3964753767789	396475	3767789	4.861E-05	0.0001195	7.085E-05	0	0
3965253767789	396525	3767789	5.196E-05	0.000125	7.303E-05	0	0
3965753767789	396575	3767789	5.613E-05	0.0001336	7.745E-05	0	0
3966253767789	396625	3767789	6.141E-05	0.0001447	8.329E-05	0	0
3966753767789	396675	3767789	6.771E-05	0.000158	9.024E-05	0	0
3967253767789	396725	3767789	7.639E-05	0.0001771	0.0001007	0	0
3967753767789	396775	3767789	8.284E-05	0.0001906	0.0001077	0	0
3968253767789	396825	3767789	9.078E-05	0.0002076	0.0001168	0	0
3968753767789	396875	3767789	9.735E-05	0.0002211	0.0001237	0	0
3969253767789	396925	3767789	0.0001016	0.0002296	0.000128	0	0
3969753767789	396975	3767789	0.0001049	0.0002358	0.0001309	0	0
3970253767789	397025	3767789	0.0001041	0.0002341	0.00013	0	0
3970753767789	397075	3767789	9.998E-05	0.0002261	0.0001261	0	0
3971253767789	397125	3767789	9.428E-05	0.0002149	0.0001206	0	0
3971753767789	397175	3767789	8.793E-05	0.0002021	0.0001142	0	0
3972253767789	397225	3767789	8.082E-05	0.0001875	0.0001067	0	0
3972753767789	397275	3767789	7.463E-05	0.0001737	9.909E-05	0	0
3973253767789	397325	3767789	6.684E-05	0.0001575	9.071E-05	0	0
3973753767789	397375	3767789	5.895E-05	0.0001418	8.289E-05	0	0
3974253767789	397425	3767789	5.229E-05	0.000128	7.575E-05	0	0
3974753767789	397475	3767789	4.71E-05	0.0001146	6.754E-05	0	0
3975253767789	397525	3767789	4.194E-05	0.0001037	6.176E-05	0	0
3964253767839	396425	3767839	4.944E-05	0.0001235	7.409E-05	0	0
3964753767839	396475	3767839	5.441E-05	0.0001333	7.89E-05	0	0
3965253767839	396525	3767839	5.775E-05	0.0001377	7.996E-05	0	0
3965753767839	396575	3767839	6.422E-05	0.0001513	8.707E-05	0	0
3966253767839	396625	3767839	7.181E-05	0.0001672	9.535E-05	0	0
3966753767839	396675	3767839	8.419E-05	0.0001946	0.0001104	0	0
3967253767839	396725	3767839	9.538E-05	0.0002183	0.0001229	0	0
3967753767839	396775	3767839	0.0001066	0.0002414	0.0001348	0	0
3968253767839	396825	3767839	0.0001183	0.0002655	0.0001472	0	0
3968753767839	396875	3767839	0.000129	0.0002873	0.0001583	0	0
3969253767839	396925	3767839	0.0001369	0.0003031	0.0001662	0	0
3969753767839	396975	3767839	0.0001441	0.0003172	0.0001731	0	0
3970253767839	397025	3767839	0.0001458	0.0003204	0.0001746	0	0
3970753767839	397075	3767839	0.000137	0.0003035	0.0001665	0	0
3971253767839	397125	3767839	0.0001273	0.0002845	0.0001572	0	0
3971753767839	397175	3767839	0.0001187	0.000267	0.0001483	0	0
3972253767839	397225	3767839	0.0001089	0.0002463	0.0001374	0	0
3972753767839	397275	3767839	9.664E-05	0.0002202	0.0001236	0	0
3973253767839	397325	3767839	8.381E-05	0.0001933	0.0001095	0	0
3973753767839	397375	3767839	7.155E-05	0.0001698	9.827E-05	0	0
3974753767839	397475	3767839	5.369E-05	0.0001326	7.888E-05	0	0
3975253767839	397525	3767839	4.711E-05	0.0001157	6.864E-05	0	0
3964253767889	396425	3767889	5.39E-05	0.0001339	7.996E-05	0	0
3964753767889	396475	3767889	5.773E-05	0.0001386	8.09E-05	0	0
3965253767889	396525	3767889	6.506E-05	0.0001539	8.884E-05	0	0

Garvey Reservoir Rehab - Mitigated Reservoir Cover and Liner Work

Cancer Risk Summary & Maximum Annual GLC for Chronic Calculations

Cancer Risk Summary

Max Risk: 1.090427

XY	X	Y	Offroad Risk	Haul Risk	Total Risk
3965753767889	396575	3767889	0.018800592	0.008483068	0.02728366
3974753767889	397475	3767889	0.015081786	0.00932679	0.024408576
3975253767889	397525	3767889	0.012780414	0.00810491	0.020885324
3964253767939	396425	3767939	0.013977754	0.009442425	0.023420179
3964753767939	396475	3767939	0.01572711	0.008487321	0.024214431
3965253767939	396525	3767939	0.018444453	0.008791333	0.027235786
3974753767939	397475	3767939	0.017678041	0.009909976	0.027588017
3975253767939	397525	3767939	0.014469939	0.009059092	0.02352903
3964253767989	396425	3767989	0.014902292	0.009263624	0.024165916
3964753767989	396475	3767989	0.017515642	0.009223522	0.026739164
3974753767989	397475	3767989	0.020628299	0.011388852	0.032017151
3975253767989	397525	3767989	0.016360326	0.010322071	0.026682397
3964253768039	396425	3768039	0.016135958	0.009986683	0.026122641
3964753768039	396475	3768039	0.019505748	0.010319002	0.029824749
3974753768039	397475	3768039	0.023719588	0.015204778	0.038924366
3975253768039	397525	3768039	0.018146008	0.014228029	0.032374037
3964253768089	396425	3768089	0.017414498	0.011012977	0.028427475
3964753768089	396475	3768089	0.021614805	0.011575114	0.033189919
3974753768089	397475	3768089	0.02707157	0.020465493	0.047537063
3975253768089	397525	3768089	0.019928129	0.018848019	0.038776148
3964253768139	396425	3768139	0.019128952	0.013713383	0.032842335
3964753768139	396475	3768139	0.023443936	0.012631746	0.036075682
3974253768139	397425	3768139	0.04310781	0.043417362	0.086525172
3974753768139	397475	3768139	0.029479784	0.031454438	0.060934223
3975253768139	397525	3768139	0.021637598	0.023733081	0.045370679
3964253768189	396425	3768189	0.019895364	0.014774169	0.034669533
3964753768189	396475	3768189	0.0249675	0.013827919	0.038795418
3973753768189	397375	3768189	0.072930912	0.257354353	0.330285265
3974253768189	397425	3768189	0.044238196	0.074336642	0.118574838
3974753768189	397475	3768189	0.031506217	0.042593515	0.074099731
3975253768189	397525	3768189	0.023218856	0.029326624	0.05254548
3964253768239	396425	3768239	0.020245805	0.015990297	0.036236103
3964753768239	396475	3768239	0.025901297	0.015290155	0.041191452
3973753768239	397375	3768239	0.071812635	0.374906371	0.446719006
3974253768239	397425	3768239	0.043604268	0.095337165	0.138941433
3974753768239	397475	3768239	0.030831689	0.051402864	0.082234553
3975253768239	397525	3768239	0.023248772	0.034868866	0.058117637
3964253768289	396425	3768289	0.019974427	0.017116475	0.037090902
3964753768289	396475	3768289	0.026042328	0.017035297	0.043077625
3973253768289	397325	3768289	0.09721961	0.993207846	1.090427456
3973753768289	397375	3768289	0.065031031	0.262917401	0.327948432
3974253768289	397425	3768289	0.045944815	0.11587655	0.161821365
3974753768289	397475	3768289	0.033312555	0.06388124	0.097193795
3975253768289	397525	3768289	0.024894847	0.041449316	0.066344163
3964253768339	396425	3768339	0.019590509	0.019394825	0.038985334
3964753768339	396475	3768339	0.025364239	0.01925012	0.044614359
3965253768339	396525	3768339	0.035804818	0.020520686	0.056325504
3972753768339	397275	3768339	0.10599417	0.806914999	0.912909169
3973253768339	397325	3768339	0.078713189	0.594859366	0.673572555
3973753768339	397375	3768339	0.057356942	0.219112211	0.276469152
3974253768339	397425	3768339	0.042999543	0.115210473	0.158210016
3974753768339	397475	3768339	0.032725638	0.069282883	0.10200852
3975253768339	397525	3768339	0.025451137	0.046029647	0.071480784
3964253768389	396425	3768389	0.018573375	0.021552621	0.040125997
3964753768389	396475	3768389	0.023911903	0.021938238	0.045850141
3965253768389	396525	3768389	0.033045451	0.022994196	0.056039647
3972253768389	397225	3768389	0.098468947	0.193980754	0.292449701
3972753768389	397275	3768389	0.08103593	0.768321207	0.849357136
3973253768389	397325	3768389	0.064787431	0.595057788	0.65984522
3973753768389	397375	3768389	0.050233444	0.210928617	0.261162061
3974253768389	397425	3768389	0.039084148	0.11540528	0.154489428
3974753768389	397475	3768389	0.030793938	0.072976081	0.103770019
3975253768389	397525	3768389	0.024511641	0.05012521	0.074636852
3964253768439	396425	3768439	0.017697273	0.02446122	0.042158492
3964753768439	396475	3768439	0.02207921	0.02519045	0.04726966
3965253768439	396525	3768439	0.0295097	0.02609854	0.05560824
3971753768439	397175	3768439	0.080721102	0.104503907	0.18522501
3972253768439	397225	3768439	0.075394684	0.203497176	0.278891859
3972753768439	397275	3768439	0.064410636	0.772121505	0.836532142
3973253768439	397325	3768439	0.054934482	0.580982029	0.635916511
3973753768439	397375	3768439	0.045362883	0.194975488	0.240338372
3974253768439	397425	3768439	0.036898878	0.106693114	0.143591991
3974753768439	397475	3768439	0.02899401	0.075551558	0.104545568
3975253768439	397525	3768439	0.023521574	0.053058325	0.076579899
3964253768489	396425	3768489	0.016221431	0.027901597	0.044123029

Max GLC for Chronic Calcs

Max GLC: 0.005539

XY	X	Y	2025	2026	2027	2034	2035
3965753767889	396575	3767889	7.48E-05	0.0001745	9.966E-05	0	0
3974753767889	397475	3767889	6.247E-05	0.0001523	8.98E-05	0	0
3975253767889	397525	3767889	5.313E-05	0.00013	7.688E-05	0	0
3964253767939	396425	3767939	5.867E-05	0.000145	8.634E-05	0	0
3964753767939	396475	3767939	6.393E-05	0.0001527	8.88E-05	0	0
3965253767939	396525	3767939	7.384E-05	0.0001734	9.96E-05	0	0
3974753767939	397475	3767939	7.222E-05	0.0001735	0.0001013	0	0
3975253767939	397525	3767939	6.004E-05	0.0001466	8.659E-05	0	0
3964253767989	396425	3767989	6.177E-05	0.0001507	8.892E-05	0	0
3964753767989	396475	3767989	7.098E-05	0.000169	9.8E-05	0	0
3974753767989	397475	3767989	8.41E-05	0.0002016	0.0001175	0	0
3975253767989	397525	3767989	6.796E-05	0.0001662	9.821E-05	0	0
3964253768039	396425	3768039	6.684E-05	0.0001629	9.611E-05	0	0
3964753768039	396475	3768039	7.909E-05	0.0001884	0.0001093	0	0
3974753768039	397475	3768039	9.877E-05	0.0002421	0.0001433	0	0
3975253768039	397525	3768039	7.81E-05	0.0001979	0.0001198	0	0
3964253768089	396425	3768089	7.237E-05	0.000177	0.0001046	0	0
3964753768089	396475	3768089	8.778E-05	0.0002095	0.0001217	0	0
3974753768089	397475	3768089	0.0001158	0.0002915	0.0001757	0	0
3975253768089	397525	3768089	8.891E-05	0.0002331	0.0001441	0	0
3964253768139	396425	3768139	8.107E-05	0.0002023	0.0001213	0	0
3964753768139	396475	3768139	9.528E-05	0.0002276	0.0001323	0	0
3974253768139	397425	3768139	0.0001949	0.0005171	0.0003221	0	0
3974753768139	397475	3768139	0.000135	0.0003622	0.0002272	0	0
3975253768139	397525	3768139	9.973E-05	0.000269	0.0001693	0	0
3964253768189	396425	3768189	8.482E-05	0.0002129	0.0001281	0	0
3964753768189	396475	3768189	0.0001018	0.0002442	0.0001424	0	0
3973753768189	397375	3768189	0.0005094	0.0017729	0.0012635	0	0
3974253768189	397425	3768189	0.0002291	0.0006761	0.0004469	0	0
3974753768189	397475	3768189	0.0001531	0.0004309	0.0002779	0	0
3975253768189	397525	3768189	0.0001108	0.0003075	0.0001967	0	0
3964253768239	396425	3768239	8.725E-05	0.0002213	0.0001341	0	0
3964753768239	396475	3768239	0.0001066	0.0002579	0.0001514	0	0
3973753768239	397375	3768239	0.0006203	0.0023391	0.0017188	0	0
3974253768239	397425	3768239	0.0002474	0.0007741	0.0005268	0	0
3974753768239	397475	3768239	0.0001593	0.0004692	0.0003099	0	0
3975253768239	397525	3768239	0.0001163	0.0003348	0.0002185	0	0
3964253768289	396425	3768289	8.739E-05	0.0002249	0.0001375	0	0
3964753768289	396475	3768289	0.0001088	0.0002675	0.0001587	0	0
3973253768289	397325	3768289	0.0013141	0.0055385	0.0042245	0	0
3973753768289	397375	3768289	0.0004869	0.0017442	0.0012573	0	0
3974253768289	397425	3768289	0.0002757	0.000891	0.0006153	0	0
3974753768289	397475	3768289	0.0001803	0.0005477	0.0003674	0	0
3975253768289	397525	3768289	0.0001286	0.0003786	0.00025	0	0
3964253768339	396425	3768339	8.825E-05	0.0002333	0.0001451	0	0
3964753768339	396475	3768339	0.0001085	0.0002735	0.0001649	0	0
3965253768339	396525	3768339	0.0001467	0.0003536	0.0002068	0	0
3972753768339	397275	3768339	0.0011632	0.0046908	0.0035276	0	0
3973253768339	397325	3768339	0.0008595	0.0034621	0.0026026	0	0
3973753768339	397375	3768339	0.0004169	0.0014759	0.001059	0	0
3974253768339	397425	3768339	0.0002647	0.0008669	0.0006023	0	0
3974753768339	397475	3768339	0.0001835	0.0005699	0.0003865	0	0
3975253768339	397525	3768339	0.000135	0.0004049	0.0002699	0	0
3964253768389	396425	3768389	8.676E-05	0.0002367	0.0001499	0	0
3964753768389	396475	3768389	0.000106	0.0002763	0.0001703	0	0
3965253768389	396525	3768389	0.0001394	0.0003461	0.0002067	0	0
3972253768389	397225	3768389	0.0005378	0.0016441	0.0011063	0	0
3972753768389	397275	3768389	0.0010372	0.0043257	0.0032886	0	0
3973253768389	397325	3768389	0.0008104	0.0033646	0.0025541	0	0
3973753768389	397375	3768389	0.0003837	0.0013856	0.0010018	0	0
3974253768389	397425	3768389	0.000251	0.0008402	0.0005892	0	0
3974753768389	397475	3768389	0.0001802	0.0005743	0.0003941	0	0
3975253768389	397525	3768389	0.0001357	0.0004182	0.0002826	0	0
3964253768439	396425	3768439	8.65E-05	0.0002447	0.0001582	0	0
3964753768439	396475	3768439	0.0001027	0.0002793	0.0001765	0	0
3965253768439	396525	3768439	0.0001299	0.0003363	0.0002064	0	0
3971753768439	397175	3768439	0.0003877	0.0010815	0.0006939	0	0
3972253768439	397225	3768439	0.0004655	0.0015273	0.0010618	0	0
3972753768439	397275	3768439	0.0009821	0.0042266	0.0032446	0	0
3973253768439	397325	3768439	0.0007618	0.0032261	0.0024643	0	0
3973753768439	397375	3768439	0.0003509	0.0012732	0.0009223	0	0
3974253768439	397425	3768439	0.0002348	0.0007822	0.0005474	0	0
3974753768439	397475	3768439	0.0001764	0.0005741	0.0003978	0	0
3975253768439	397525	3768439	0.000135	0.0004256	0.0002905	0	0
3964253768489	396425	3768489	8.464E-05	0.000251	0.0001664	0	0

Garvey Reservoir Rehab - Mitigated Reservoir Cover and Liner Work

Cancer Risk Summary & Maximum Annual GLC for Chronic Calculations

Cancer Risk Summary

Max Risk: 1.090427

XY	X	Y	Offroad Risk	Haul Risk	Total Risk
3964753768489	396475	3768489	0.019954483	0.029093117	0.0490476
3965253768489	396525	3768489	0.025982497	0.030224474	0.05620697
3970753768489	397075	3768489	0.077513	0.059523096	0.137036096
3971253768489	397125	3768489	0.06904472	0.0756193	0.144664021
3971753768489	397175	3768489	0.062591477	0.109366021	0.171957498
3972253768489	397225	3768489	0.057760091	0.202315173	0.260075265
3972753768489	397275	3768489	0.053014179	0.758050158	0.811064337
3973253768489	397325	3768489	0.046783167	0.501414181	0.548197348
3973753768489	397375	3768489	0.039568497	0.192058797	0.231627294
3974253768489	397425	3768489	0.033190755	0.106006855	0.139197611
3974753768489	397475	3768489	0.027764618	0.066070234	0.093834852
3975253768489	397525	3768489	0.023121986	0.047864206	0.070986192
3964253768539	396425	3768539	0.014777643	0.032447862	0.047225505
3964753768539	396475	3768539	0.017985033	0.034216763	0.052201797
3965253768539	396525	3768539	0.0226355	0.035357295	0.057992795
3965753768539	396575	3768539	0.030343778	0.034027653	0.064371431
3970253768539	397025	3768539	0.066452026	0.056305115	0.122757141
3970753768539	397075	3768539	0.060639834	0.065883675	0.126523509
3971253768539	397125	3768539	0.055316264	0.082782779	0.138099043
3971753768539	397175	3768539	0.05113234	0.118198693	0.169331033
3972253768539	397225	3768539	0.047068078	0.207306507	0.254374585
3972753768539	397275	3768539	0.044591486	0.690510158	0.735101644
3973253768539	397325	3768539	0.039858395	0.483555786	0.523414181
3973753768539	397375	3768539	0.034523429	0.193442271	0.227965699
3974253768539	397425	3768539	0.029803871	0.103604783	0.133408654
3974753768539	397475	3768539	0.025453986	0.066831058	0.092285044
3975253768539	397525	3768539	0.021671075	0.047590762	0.069261836
3964253768589	396425	3768589	0.01351691	0.037866752	0.051383661
3964753768589	396475	3768589	0.016098207	0.041090745	0.057188953
3965253768589	396525	3768589	0.020029985	0.040943959	0.060973943
3965753768589	396575	3768589	0.025312955	0.039502781	0.064815736
3966253768589	396625	3768589	0.032279751	0.039052491	0.071332242
3968253768589	396825	3768589	0.060965345	0.048115321	0.109080666
3968753768589	396875	3768589	0.062311551	0.051001444	0.113312995
3969253768589	396925	3768589	0.059432521	0.055397098	0.11482962
3969753768589	396975	3768589	0.057171037	0.05946754	0.116638577
3970253768589	397025	3768589	0.053562634	0.0654193	0.118981934
3970753768589	397075	3768589	0.049214173	0.074314949	0.123529123
3971253768589	397125	3768589	0.04620266	0.093355885	0.139558544
3971753768589	397175	3768589	0.043030883	0.13232787	0.175358754
3972253768589	397225	3768589	0.039608385	0.231440002	0.271048387
3972753768589	397275	3768589	0.036277771	0.737547721	0.773825491
3973253768589	397325	3768589	0.034106033	0.480224966	0.514330999
3973753768589	397375	3768589	0.030164996	0.193397722	0.223562718
3974253768589	397425	3768589	0.026756743	0.10057921	0.127335954
3974753768589	397475	3768589	0.02327655	0.066348557	0.089625108
3975253768589	397525	3768589	0.020168167	0.047991258	0.068159425
3964253768639	396425	3768639	0.012303187	0.045642347	0.057945535
3964753768639	396475	3768639	0.014321072	0.051683472	0.066004545
3965253768639	396525	3768639	0.017507807	0.048567537	0.066075343
3965753768639	396575	3768639	0.021267925	0.048861494	0.070129419
3966253768639	396625	3768639	0.025931925	0.049733745	0.07566567
3966753768639	396675	3768639	0.031439262	0.050771606	0.082210868
3967253768639	396725	3768639	0.037189487	0.052338381	0.089527869
3967753768639	396775	3768639	0.041924003	0.055177283	0.097101285
3968253768639	396825	3768639	0.045462602	0.057903579	0.103366181
3968753768639	396875	3768639	0.046635725	0.062087602	0.108723327
3969253768639	396925	3768639	0.046155649	0.066797416	0.112953066
3969753768639	396975	3768639	0.045172705	0.070948838	0.116121543
3970253768639	397025	3768639	0.043138438	0.076546916	0.119685353
3970753768639	397075	3768639	0.040352716	0.084949461	0.125302177
3971253768639	397125	3768639	0.037252168	0.10214592	0.139398088
3971753768639	397175	3768639	0.035965793	0.149436123	0.185401916
3972253768639	397225	3768639	0.03373921	0.294505531	0.328244741
3972753768639	397275	3768639	0.031531146	1.025874147	1.057405294
3973253768639	397325	3768639	0.029362258	0.432577334	0.461939592
3973753768639	397375	3768639	0.026429095	0.190587891	0.217016986
3974253768639	397425	3768639	0.023744517	0.111093705	0.134838222
3974753768639	397475	3768639	0.021254392	0.065947019	0.08720141
3975253768639	397525	3768639	0.018700161	0.048459133	0.067159294
3964253768689	396425	3768689	0.011167815	0.058831773	0.069999589
3964753768689	396475	3768689	0.01276047	0.069788393	0.082548863
3965253768689	396525	3768689	0.014967109	0.072434951	0.08740206
3965753768689	396575	3768689	0.017839728	0.071192564	0.089032292
3966253768689	396625	3768689	0.020992273	0.072029506	0.093021779

Max GLC for Chronic Calcs

Max GLC: 0.005539

XY	X	Y	2025	2026	2027	2034	2035
3964753768489	396475	3768489	9.901E-05	0.0002833	0.0001843	0	0
3965253768489	396525	3768489	0.0001214	0.0003315	0.00021	0	0
3970753768489	397075	3768489	0.0003324	0.0008392	0.0005068	0	0
3971253768489	397125	3768489	0.0003181	0.0008579	0.0005397	0	0
3971753768489	397175	3768489	0.0003283	0.000977	0.0006487	0	0
3972253768489	397225	3768489	0.000402	0.0013968	0.0009948	0	0
3972753768489	397275	3768489	0.000928	0.0040773	0.0031493	0	0
3973253768489	397325	3768489	0.0006553	0.0027798	0.0021246	0	0
3973753768489	397375	3768489	0.0003276	0.001218	0.0008904	0	0
3974253768489	397425	3768489	0.000221	0.0007526	0.0005316	0	0
3974753768489	397475	3768489	0.0001628	0.0005191	0.0003564	0	0
3975253768489	397525	3768489	0.0001286	0.0003974	0.0002688	0	0
3964253768539	396425	3768539	8.398E-05	0.000263	0.0001791	0	0
3964753768539	396475	3768539	9.705E-05	0.0002944	0.0001973	0	0
3965253768539	396525	3768539	0.0001146	0.0003328	0.0002182	0	0
3965753768539	396575	3768539	0.0001406	0.0003809	0.0002403	0	0
3970253768539	397025	3768539	0.0002901	0.0007452	0.0004551	0	0
3970753768539	397075	3768539	0.0002789	0.0007508	0.0004719	0	0
3971253768539	397125	3768539	0.0002766	0.0007957	0.0005191	0	0
3971753768539	397175	3768539	0.0002964	0.0009391	0.0006427	0	0
3972253768539	397225	3768539	0.000369	0.0013455	0.0009765	0	0
3972753768539	397275	3768539	0.0008322	0.0036878	0.0028556	0	0
3973253768539	397325	3768539	0.0006133	0.0026436	0.0020303	0	0
3973753768539	397375	3768539	0.0003111	0.001189	0.0008779	0	0
3974253768539	397425	3768539	0.0002066	0.0007169	0.0005102	0	0
3974753768539	397475	3768539	0.0001553	0.0005065	0.0003512	0	0
3975253768539	397525	3768539	0.0001232	0.0003858	0.0002626	0	0
3964253768589	396425	3768589	8.481E-05	0.0002806	0.0001958	0	0
3964753768589	396475	3768589	9.709E-05	0.0003146	0.0002175	0	0
3965253768589	396525	3768589	0.0001109	0.0003417	0.0002308	0	0
3965753768589	396575	3768589	0.0001281	0.000372	0.0002439	0	0
3966253768589	396625	3768589	0.0001523	0.0004191	0.0002668	0	0
3968253768589	396825	3768589	0.0002627	0.0006664	0.0004037	0	0
3968753768589	396875	3768589	0.0002703	0.00069	0.0004197	0	0
3969253768589	396925	3768589	0.0002644	0.0006911	0.0004267	0	0
3969753768589	396975	3768589	0.0002603	0.000695	0.0004346	0	0
3970253768589	397025	3768589	0.0002534	0.0006985	0.0004451	0	0
3970753768589	397075	3768589	0.0002467	0.0007112	0.0004645	0	0
3971253768589	397125	3768589	0.0002546	0.0007828	0.0005282	0	0
3971753768589	397175	3768589	0.0002815	0.0009507	0.0006692	0	0
3972253768589	397225	3768589	0.0003662	0.0014106	0.0010444	0	0
3972753768589	397275	3768589	0.0008488	0.0038587	0.00301	0	0
3973253768589	397325	3768589	0.0005897	0.0025867	0.0019969	0	0
3973753768589	397375	3768589	0.0002956	0.001158	0.0008623	0	0
3974253768589	397425	3768589	0.0001929	0.0006805	0.0004876	0	0
3974753768589	397475	3768589	0.0001472	0.0004887	0.0003416	0	0
3975253768589	397525	3768589	0.0001182	0.0003771	0.0002589	0	0
3964253768639	396425	3768639	8.811E-05	0.00031	0.0002219	0	0
3964753768639	396475	3768639	0.0001011	0.0003537	0.0002526	0	0
3965253768639	396525	3768639	0.0001094	0.0003611	0.0002517	0	0
3965753768639	396575	3768639	0.000123	0.0003891	0.0002661	0	0
3966253768639	396625	3768639	0.0001403	0.0004264	0.0002861	0	0
3966753768639	396675	3768639	0.0001608	0.0004704	0.0003096	0	0
3967253768639	396725	3768639	0.0001827	0.0005188	0.0003361	0	0
3967753768639	396775	3768639	0.0002022	0.0005661	0.0003639	0	0
3968253768639	396825	3768639	0.0002174	0.0006045	0.0003871	0	0
3968753768639	396875	3768639	0.0002256	0.0006332	0.0004076	0	0
3969253768639	396925	3768639	0.0002285	0.0006528	0.0004243	0	0
3969753768639	396975	3768639	0.0002291	0.0006661	0.000437	0	0
3970253768639	397025	3768639	0.0002274	0.0006791	0.0004517	0	0
3970753768639	397075	3768639	0.0002257	0.0007004	0.0004747	0	0
3971253768639	397125	3768639	0.0002316	0.0007624	0.0005309	0	0
3971753768639	397175	3768639	0.0002732	0.0009843	0.0007111	0	0
3972253768639	397225	3768639	0.000407	0.001677	0.00127	0	0
3972753768639	397275	3768639	0.0011136	0.0052333	0.0041197	0	0
3973253768639	397325	3768639	0.0005264	0.0023204	0.001794	0	0
3973753768639	397375	3768639	0.0002797	0.0011178	0.0008381	0	0
3974253768639	397425	3768639	0.0001925	0.0007106	0.0005181	0	0
3974753768639	397475	3768639	0.0001396	0.0004725	0.0003329	0	0
3975253768639	397525	3768639	0.0001135	0.000369	0.0002555	0	0
3964253768689	396425	3768689	9.697E-05	0.0003663	0.0002694	0	0
3964753768689	396475	3768689	0.0001133	0.0004311	0.0003178	0	0
3965253768689	396525	3768689	0.0001237	0.0004597	0.000336	0	0
3965753768689	396575	3768689	0.0001327	0.0004739	0.0003413	0	0
3966253768689	396625	3768689	0.0001446	0.0005003	0.0003557	0	0

Garvey Reservoir Rehab - Mitigated Reservoir Cover and Liner Work

Cancer Risk Summary & Maximum Annual GLC for Chronic Calculations

Cancer Risk Summary

Max Risk: 1.090427

XY	X	Y	Offroad Risk	Haul Risk	Total Risk
3966753768689	396675	3768689	0.024721051	0.071548511	0.096269562
3967253768689	396725	3768689	0.028261788	0.072741056	0.101002844
3967753768689	396775	3768689	0.03157602	0.073786	0.10536202
3968253768689	396825	3768689	0.034127402	0.077779736	0.111907138
3968753768689	396875	3768689	0.035814077	0.081923198	0.117737276
3969253768689	396925	3768689	0.036218652	0.085460703	0.121679355
3969753768689	396975	3768689	0.035841856	0.089108396	0.124950253
3970253768689	397025	3768689	0.034973589	0.094196883	0.129170472
3970753768689	397075	3768689	0.033849613	0.103325752	0.137175365
3971253768689	397125	3768689	0.031454933	0.120661951	0.152116884
3971753768689	397175	3768689	0.030489083	0.168258887	0.19874797
3972253768689	397225	3768689	0.029173504	0.381569647	0.410743151
3972753768689	397275	3768689	0.027382836	1.048070283	1.075453119
3973253768689	397325	3768689	0.025546582	0.35077481	0.376321392
3973753768689	397375	3768689	0.023528697	0.177580173	0.20110887
3974253768689	397425	3768689	0.021333455	0.110926405	0.132259859
3974753768689	397475	3768689	0.019201605	0.075701213	0.094902818
3975253768689	397525	3768689	0.017175885	0.054942776	0.07211866
0	0	0	0	0	0
0	0	0	0	0	0
0	0	0	0	0	0
0	0	0	0	0	0
0	0	0	0	0	0
0	0	0	0	0	0
0	0	0	0	0	0
0	0	0	0	0	0
0	0	0	0	0	0
0	0	0	0	0	0
0	0	0	0	0	0
0	0	0	0	0	0
0	0	0	0	0	0
0	0	0	0	0	0
0	0	0	0	0	0
0	0	0	0	0	0
0	0	0	0	0	0
0	0	0	0	0	0
0	0	0	0	0	0
0	0	0	0	0	0
0	0	0	0	0	0
0	0	0	0	0	0
0	0	0	0	0	0
0	0	0	0	0	0
0	0	0	0	0	0
0	0	0	0	0	0
0	0	0	0	0	0
0	0	0	0	0	0
0	0	0			
0	0	0			
0	0	0			
0	0	0			
0	0	0			
0	0	0			
0	0	0			
0	0	0			
0	0	0			
0	0	0			
0	0	0			
0	0	0			
0	0	0			
0	0	0			
0	0	0			
0	0	0			
0	0	0			
0	0	0			
0	0	0			
0	0	0			
0	0	0			
0	0	0			
0	0	0			
0	0	0			
0	0	0			
0	0	0			
0	0	0			
0	0	0			
0	0	0			

Max GLC for Chronic Calcs

Max GLC: 0.005539

XY	X	Y	2025	2026	2027	2034	2035
3966753768689	396675	3768689	0.0001573	0.0005243	0.000367	0	0
3967253768689	396725	3768689	0.000171	0.0005552	0.0003842	0	0
3967753768689	396775	3768689	0.0001838	0.0005838	0.0004	0	0
3968253768689	396825	3768689	0.0001967	0.0006213	0.0004246	0	0
3968753768689	396875	3768689	0.0002067	0.0006535	0.0004468	0	0
3969253768689	396925	3768689	0.0002116	0.0006736	0.000462	0	0
3969753768689	396975	3768689	0.0002138	0.0006888	0.000475	0	0
3970253768689	397025	3768689	0.0002157	0.0007075	0.0004918	0	0
3970753768689	397075	3768689	0.0002207	0.0007441	0.0005235	0	0
3971253768689	397125	3768689	0.0002291	0.0008119	0.0005827	0	0
3971753768689	397175	3768689	0.0002722	0.0010375	0.0007653	0	0
3972253768689	397225	3768689	0.0004759	0.0020699	0.001594	0	0
3972753768689	397275	3768689	0.0011206	0.0053123	0.0041917	0	0
3973253768689	397325	3768689	0.000433	0.0018939	0.0014609	0	0
3973753768689	397375	3768689	0.0002567	0.0010338	0.0007771	0	0
3974253768689	397425	3768689	0.0001838	0.0006927	0.0005089	0	0
3974753768689	397475	3768689	0.0001419	0.0005056	0.0003637	0	0
3975253768689	397525	3768689	0.0001144	0.0003899	0.0002754	0	0
0	0	0	0	0	0		
0	0	0	0	0	0		
0	0	0	0	0	0		
0	0	0	0	0	0		
0	0	0	0	0	0		
0	0	0	0	0	0		
0	0	0	0	0	0		
0	0	0	0	0	0		
0	0	0	0	0	0		
0	0	0	0	0	0		
0	0	0	0	0	0		
0	0	0	0	0	0		
0	0	0	0	0	0		
0	0	0	0	0	0		
0	0	0	0	0	0		
0	0	0	0	0	0		
0	0	0	0	0	0		
0	0	0	0	0	0		
0	0	0	0	0	0		
0	0	0	0	0	0		
0	0	0	0	0	0		
0	0	0	0	0	0		
0	0	0	0	0	0		
0	0	0	0	0	0		
0	0	0	0	0	0		
0	0	0	0	0	0		
0	0	0	0	0	0		
0	0	0	0	0	0		

Garvey Reservoir Rehab - Mitigated Reservoir Cover and Liner Work

Construction Modeling Assumptions

AERMOD Sources

Volume Sources		
Offroad Construction Exhaust		
Release Height	3.66	m
Emissions rate	1	g/s
Init Vert Dimension	3.4	m
Line Volume		
Onroad Hauling Exhaust		
Plume Height	7.315	m
Plume Width	20	m
Release Height	3.66	m
Emissions rate	1	g/s

Meteorology:

SCAQMD	Pico	Rivera	2010 - 2012, 2015 - 2016

SCAQMD Met Data

https://www.aqmd.gov/home/air-quality/meteorological-data/data-for-aermod

AERMOD Sources

Garvey Reservoir Rehab - Mitigated Reservoir Cover and Liner Work

Health Risk Assessment Risk Factors

Residential Risk	Abbreviation	UOM	3rd Trimester	0<2	2<16	16<30
Daily Breathing Rate (95th %'ile)	DBR	L/kg-day	361	1090	572	261
Fraction Of Time At Home [a]	FAH	unitless	1	1	1	0.73
Exposure Frequency	EF	days/year	0.96	0.96	0.96	0.96
Age Sensitivity Factor	ASF	unitless	10	10	3	1
Inhalation Absorption Factor	A	unitless	1	1	1	1
Conversion Factor	CF_1	m^3/L	0.001	0.001	0.001	0.001
Conversion Factor	CF_2	$\mu g/m^3$	0.001	0.001	0.001	0.001
Cancer Potency Factor (diesel exhaust)	CPF	$mg/kg\text{-}day^{-1}$	1.1	1.1	1.1	1.1
Averaging Time (for residential exposure)	AT	years	70.00	70.00	70.00	70.00

[a] assume school or daycare will have cancer risk of >1 per million

Garvey Reservoir Rehab - Mitigated Reservoir Cover and Liner Work

Health Risk Assessment Exposure Duration Assumptions for Offroad Equipment

Residential Receptors

Start Date	*9/30/2025*	*12/30/2025*	
End Date	*12/29/2025*	*12/30/2027*	

	9/30/2025	*11/7/2027*	*Days*	*90*	*730*
Phase	Start Date	End Date	Duration (days)	3rd Tri	0<2
Demolition - 2025	9/30/2025	12/31/2025	93	91	2
Demolition - 2026	1/1/2026	2/16/2026	47	0	47
Site Preparation - 2025			1	0	0
Site Preparation - 2026			1	0	0
Grading - 2025			1	0	0
Grading - 2026			1	0	0
Infrastructure - 2025	5/8/2026	12/31/2026	238	0	238
Infrastructure - 2026	1/1/2027	11/7/2027	311	0	311
Paving - 2025			1	0	0
Architectural Coating - 2026			1	0	0

Intake Factor for Inhalation, IF (m^3/kg-day)

Phase	Year	Year	Equation	3rd Trimester	0<2
Demolition - 2025		2025		0.012329142	0.000818165
Demolition - 2026		2026	$\frac{DBR \cdot FAH \cdot EF \cdot ED \cdot ASF \cdot A \cdot CF_1}{AT}$	0	0.019226872
Site Preparation - 2025		1900		0	0
Site Preparation - 2026		1900		0	0
Grading - 2025		1900		0	0
Grading - 2026		1900		0	0
Infrastructure - 2025		2026		0	0.097361606
Infrastructure - 2026		2027		0	0.12722462
Paving - 2025		1900		0	0
Architectural Coating - 2026		1900		0	0

Risk Calculation Part 1, R1

Equation	3rd Trimester	0<2
	1.35621E-05	8.99981E-07
	0	2.11496E-05
	0	0
	0	0
$IF \cdot CPF \cdot CF_2$	0	0
	0	0
	0	0.000107098
	0	0.000139947
	0	0
	0	0

Exposure Durations

Garvey Reservoir Rehab - Mitigated Reservoir Cover and Liner Work

Offroad DPM Emissions, Ground Level Concentrations and Health Risk Calculations

Residential Receptors

Phase	Year	Emissions (lbs/day)	Work Hours Per Day	Emissions (g/s)
Demolition - 2025	2025	0.020	10	0.000251994
Demolition - 2026	2026	0.020	10	0.000251994
Site Preparation - 2025	1900	0.000	10	0
Site Preparation - 2026	1900	0.000	10	0
Grading - 2025	1900	0.000	10	0
Grading - 2026	1900	0.000	10	0
Infrastructure - 2025	2026	0.020	10	0.000251994
Infrastructure - 2026	2027	0.020	10	0.000251994
Paving - 2025	1900	0.000	10	0
Architectural Coating - 2026	1900	0.000	10	0

		AERMOD Column Identifier:	*4*	*4*	*4*	*4*	*4*	*4*	*4*	*4*	*4*	*4*					
Garvey Reservoir Rehab - Mitigated Reservoir Cover and Liner Work			Demolition - 2025	Demolition - 2026	Site Preparation - 202	Site Preparation - 202	Grading - 2025	Grading - 2026	Infrastructure - 202	Infrastructure - 2026	Paving - 2025	Architectural Coating - 2	Child Risk				
Unique Identifier	X (UTM)	Y (UTM)	2025	2026	1900	1900	1900	1900	2026	2027	1900	1900	3rd Trimester	0<2	2<16	Total	per million
396166.283767377.2	396166.28	3767377	1.38143E-05	1.38143E-05	0	0	0	0	1.38143E-05	1.38143E-05	0	0	1.87351E-10	3.71736E-09	#VALUE!	3.90471E-09	0.0039047
396266.283767377.2	396266.28	3767377	1.48652E-05	1.48652E-05	0	0	0	0	1.48652E-05	1.48652E-05	0	0	2.01602E-10	4.00013E-09	#VALUE!	4.20173E-09	0.0042017
396366.283767377.2	396366.28	3767377	1.6488E-05	1.6488E-05	0	0	0	0	1.6488E-05	1.6488E-05	0	0	2.23611E-10	4.43683E-09	#VALUE!	4.66044E-09	0.0046604
396466.283767377.2	396466.28	3767377	1.7748E-05	1.7748E-05	0	0	0	0	1.7748E-05	1.7748E-05	0	0	2.40699E-10	4.77588E-09	#VALUE!	5.01658E-09	0.0050166
396566.283767377.2	396566.28	3767377	1.92322E-05	1.92322E-05	0	0	0	0	1.92322E-05	1.92322E-05	0	0	2.60828E-10	5.17528E-09	#VALUE!	5.43611E-09	0.0054361
396666.283767377.2	396666.28	3767377	1.96354E-05	1.96354E-05	0	0	0	0	1.96354E-05	1.96354E-05	0	0	2.66297E-10	5.28378E-09	#VALUE!	5.55007E-09	0.0055501
396766.283767377.2	396766.28	3767377	1.95497E-05	1.95497E-05	0	0	0	0	1.95497E-05	1.95497E-05	0	0	2.65135E-10	5.26072E-09	#VALUE!	5.52586E-09	0.0055259
396866.283767377.2	396866.28	3767377	1.96304E-05	1.96304E-05	0	0	0	0	1.96304E-05	1.96304E-05	0	0	2.66228E-10	5.28242E-09	#VALUE!	5.54865E-09	0.0055486
396966.283767377.2	396966.28	3767377	2.02125E-05	2.02125E-05	0	0	0	0	2.02125E-05	2.02125E-05	0	0	2.74123E-10	5.43906E-09	#VALUE!	5.71319E-09	0.0057132
397066.283767377.2	397066.28	3767377	2.02604E-05	2.02604E-05	0	0	0	0	2.02604E-05	2.02604E-05	0	0	2.74772E-10	5.45195E-09	#VALUE!	5.72672E-09	0.0057267
397166.283767377.2	397166.28	3767377	1.93683E-05	1.93683E-05	0	0	0	0	1.93683E-05	1.93683E-05	0	0	2.62674E-10	5.2119E-09	#VALUE!	5.47457E-09	0.0054746
397266.283767377.2	397266.28	3767377	1.7937E-05	1.7937E-05	0	0	0	0	1.7937E-05	1.7937E-05	0	0	2.43262E-10	4.82674E-09	#VALUE!	5.07E-09	0.00507
397366.283767377.2	397366.28	3767377	1.70449E-05	1.70449E-05	0	0	0	0	1.70449E-05	1.70449E-05	0	0	2.31164E-10	4.58669E-09	#VALUE!	4.81785E-09	0.0048179
397466.283767377.2	397466.28	3767377	1.59966E-05	1.59966E-05	0	0	0	0	1.59966E-05	1.59966E-05	0	0	2.16947E-10	4.3046E-09	#VALUE!	4.52154E-09	0.0045215
397566.283767377.2	397566.28	3767377	1.4525E-05	1.4525E-05	0	0	0	0	1.4525E-05	1.4525E-05	0	0	1.96988E-10	3.90859E-09	#VALUE!	4.10557E-09	0.0041056
397666.283767377.2	397666.28	3767377	1.31365E-05	1.31365E-05	0	0	0	0	1.31365E-05	1.31365E-05	0	0	1.78158E-10	3.53495E-09	#VALUE!	3.71311E-09	0.0037131
397766.283767377.2	397766.28	3767377	1.15539E-05	1.15539E-05	0	0	0	0	1.15539E-05	1.15539E-05	0	0	1.56695E-10	3.1091E-09	#VALUE!	3.2658E-09	0.0032658
397866.283767377.2	397866.28	3767377	1.03771E-05	1.03771E-05	0	0	0	0	1.03771E-05	1.03771E-05	0	0	1.40735E-10	2.79243E-09	#VALUE!	2.93316E-09	0.0029332
396166.283767477.2	396166.28	3767477	1.57623E-05	1.57623E-05	0	0	0	0	1.57623E-05	1.57623E-05	0	0	2.13769E-10	4.24153E-09	#VALUE!	4.4553E-09	0.0044553
396266.283767477.2	396266.28	3767477	1.69743E-05	1.69743E-05	0	0	0	0	1.69743E-05	1.69743E-05	0	0	2.30207E-10	4.5677E-09	#VALUE!	4.79791E-09	0.0047979
396366.283767477.2	396366.28	3767477	1.94061E-05	1.94061E-05	0	0	0	0	1.94061E-05	1.94061E-05	0	0	2.63187E-10	5.22207E-09	#VALUE!	5.48526E-09	0.0054853
396466.283767477.2	396466.28	3767477	2.15758E-05	2.15758E-05	0	0	0	0	2.15758E-05	2.15758E-05	0	0	2.92612E-10	5.80592E-09	#VALUE!	6.09853E-09	0.0060985
396566.283767477.2	396566.28	3767477	2.33876E-05	2.33876E-05	0	0	0	0	2.33876E-05	2.33876E-05	0	0	3.17184E-10	6.29347E-09	#VALUE!	6.61066E-09	0.0066107
396666.283767477.2	396666.28	3767477	2.43931E-05	2.43931E-05	0	0	0	0	2.43931E-05	2.43931E-05	0	0	3.3082E-10	6.56404E-09	#VALUE!	6.89486E-09	0.0068949
396766.283767477.2	396766.28	3767477	2.496E-05	2.496E-05	0	0	0	0	2.496E-05	2.496E-05	0	0	3.3851E-10	6.71661E-09	#VALUE!	7.05512E-09	0.0070551
396866.283767477.2	396866.28	3767477	2.53103E-05	2.53103E-05	0	0	0	0	2.53103E-05	2.53103E-05	0	0	3.4326E-10	6.81087E-09	#VALUE!	7.15413E-09	0.0071541
396966.283767477.2	396966.28	3767477	2.60537E-05	2.60537E-05	0	0	0	0	2.60537E-05	2.60537E-05	0	0	3.53342E-10	7.01091E-09	#VALUE!	7.36425E-09	0.0073642
397066.283767477.2	397066.28	3767477	2.61041E-05	2.61041E-05	0	0	0	0	2.61041E-05	2.61041E-05	0	0	3.54025E-10	7.02447E-09	#VALUE!	7.37849E-09	0.0073785
397166.283767477.2	397166.28	3767477	2.48794E-05	2.48794E-05	0	0	0	0	2.48794E-05	2.48794E-05	0	0	3.37416E-10	6.69491E-09	#VALUE!	7.03233E-09	0.0070323
397266.283767477.2	397266.28	3767477	2.27627E-05	2.27627E-05	0	0	0	0	2.27627E-05	2.27627E-05	0	0	3.08708E-10	6.1253E-09	#VALUE!	6.43401E-09	0.006434
397366.283767477.2	397366.28	3767477	2.08702E-05	2.08702E-05	0	0	0	0	2.08702E-05	2.08702E-05	0	0	2.83043E-10	5.61605E-09	#VALUE!	5.89909E-09	0.0058991
397466.283767477.2	397466.28	3767477	1.92524E-05	1.92524E-05	0	0	0	0	1.92524E-05	1.92524E-05	0	0	2.61102E-10	5.18071E-09	#VALUE!	5.44181E-09	0.0054418
397566.283767477.2	397566.28	3767477	1.72062E-05	1.72062E-05	0	0	0	0	1.72062E-05	1.72062E-05	0	0	2.33351E-10	4.63009E-09	#VALUE!	4.86344E-09	0.0048634
397666.283767477.2	397666.28	3767477	1.51776E-05	1.51776E-05	0	0	0	0	1.51776E-05	1.51776E-05	0	0	2.0584E-10	4.08421E-09	#VALUE!	4.29005E-09	0.0042901
397766.283767477.2	397766.28	3767477	1.33658E-05	1.33658E-05	0	0	0	0	1.33658E-05	1.33658E-05	0	0	1.81268E-10	3.59666E-09	#VALUE!	3.77793E-09	0.0037779
397866.283767477.2	397866.28	3767477	1.1811E-05	1.1811E-05	0	0	0	0	1.1811E-05	1.1811E-05	0	0	1.60181E-10	3.17827E-09	#VALUE!	3.33845E-09	0.0033384
396166.283767577.2	396166.28	3767577	1.74733E-05	1.74733E-05	0	0	0	0	1.74733E-05	1.74733E-05	0	0	2.36974E-10	4.70197E-09	#VALUE!	4.93894E-09	0.0049389
396266.283767577.2	396266.28	3767577	1.95724E-05	1.95724E-05	0	0	0	0	1.95724E-05	1.95724E-05	0	0	2.65442E-10	5.26683E-09	#VALUE!	5.53227E-09	0.0055323
396366.283767577.2	396366.28	3767577	2.24804E-05	2.24804E-05	0	0	0	0	2.24804E-05	2.24804E-05	0	0	3.04881E-10	6.04936E-09	#VALUE!	6.35424E-09	0.0063542
396466.283767577.2	396466.28	3767577	2.58597E-05	2.58597E-05	0	0	0	0	2.58597E-05	2.58597E-05	0	0	3.5071E-10	6.95869E-09	#VALUE!	7.3094E-09	0.0073094
396566.283767577.2	396566.28	3767577	2.937E-05	2.937E-05	0	0	0	0	2.937E-05	2.937E-05	0	0	3.98317E-10	7.90329E-09	#VALUE!	8.30161E-09	0.0083016
396666.283767577.2	396666.28	3767577	3.23435E-05	3.23435E-05	0	0	0	0	3.23435E-05	3.23435E-05	0	0	4.38644E-10	8.70345E-09	#VALUE!	9.1421E-09	0.0091421
396766.283767577.2	396766.28	3767577	3.25753E-05	3.25753E-05	0	0	0	0	3.25753E-05	3.25753E-05	0	0	4.41788E-10	8.76584E-09	#VALUE!	9.20762E-09	0.0092076
396866.283767577.2	396866.28	3767577	3.44124E-05	3.44124E-05	0	0	0	0	3.44124E-05	3.44124E-05	0	0	4.66702E-10	9.26017E-09	#VALUE!	9.72688E-09	0.0097269

Garvey Reservoir Rehab - Mitigated Reservoir Cover and Liner Work			Demolition - 2025	Demolition - 2026	Site Preparation - 202	Site Preparation - 202	Grading - 2025	Grading - 2026	Infrastructure - 2025	Infrastructure - 2026	Paving - 2025	Architectural Coating - 2	Child Risk				
Unique Identifier	X (UTM)	Y (UTM)	2025	2026	1900	1900	1900	1900	2026	2027	1900	1900	3rd Trimester	0<2	2<16	Total	per million
396966.283767577.2	396966.28	3767577	3.50575E-05	3.50575E-05	0	0	0	0	3.50575E-05	3.50575E-05	0	0	4.75451E-10	9.43377E-09	#VALUE!	9.90922E-09	0.0099092
397066.283767577.2	397066.28	3767577	3.46921E-05	3.46921E-05	0	0	0	0	3.46921E-05	3.46921E-05	0	0	4.70496E-10	9.33544E-09	#VALUE!	9.80594E-09	0.0098059
397166.283767577.2	397166.28	3767577	3.31877E-05	3.31877E-05	0	0	0	0	3.31877E-05	3.31877E-05	0	0	4.50093E-10	8.93062E-09	#VALUE!	9.38071E-09	0.0093807
397266.283767577.2	397266.28	3767577	2.99571E-05	2.99571E-05	0	0	0	0	2.99571E-05	2.99571E-05	0	0	4.0628E-10	8.06129E-09	#VALUE!	8.46757E-09	0.0084676
397366.283767577.2	397366.28	3767577	2.64947E-05	2.64947E-05	0	0	0	0	2.64947E-05	2.64947E-05	0	0	3.59323E-10	7.12957E-09	#VALUE!	7.4889E-09	0.0074889
397466.283767577.2	397466.28	3767577	2.38135E-05	2.38135E-05	0	0	0	0	2.38135E-05	2.38135E-05	0	0	3.2296E-10	6.40807E-09	#VALUE!	6.73103E-09	0.006731
397566.283767577.2	397566.28	3767577	2.06257E-05	2.06257E-05	0	0	0	0	2.06257E-05	2.06257E-05	0	0	2.79728E-10	5.55027E-09	#VALUE!	5.83E-09	0.00583
397666.283767577.2	397666.28	3767577	1.77883E-05	1.77883E-05	0	0	0	0	1.77883E-05	1.77883E-05	0	0	2.41246E-10	4.78673E-09	#VALUE!	5.02797E-09	0.005028
397766.283767577.2	397766.28	3767577	1.53137E-05	1.53137E-05	0	0	0	0	1.53137E-05	1.53137E-05	0	0	2.07685E-10	4.12083E-09	#VALUE!	4.32852E-09	0.0043285
397866.283767577.2	397866.28	3767577	1.32776E-05	1.32776E-05	0	0	0	0	1.32776E-05	1.32776E-05	0	0	1.80071E-10	3.57292E-09	#VALUE!	3.753E-09	0.003753
396166.283767677.2	396166.28	3767677	1.96656E-05	1.96656E-05	0	0	0	0	1.96656E-05	1.96656E-05	0	0	2.66707E-10	5.29192E-09	#VALUE!	5.55862E-09	0.0055586
396266.283767677.2	396266.28	3767677	2.26089E-05	2.26089E-05	0	0	0	0	2.26089E-05	2.26089E-05	0	0	3.06624E-10	6.08394E-09	#VALUE!	6.39056E-09	0.0063906
396366.283767677.2	396366.28	3767677	2.68853E-05	2.68853E-05	0	0	0	0	2.68853E-05	2.68853E-05	0	0	3.6462E-10	7.23468E-09	#VALUE!	7.5993E-09	0.0075993
396466.283767677.2	396466.28	3767677	3.22603E-05	3.22603E-05	0	0	0	0	3.22603E-05	3.22603E-05	0	0	4.37516E-10	8.68107E-09	#VALUE!	9.11859E-09	0.0091186
396566.283767677.2	396566.28	3767677	3.74514E-05	3.74514E-05	0	0	0	0	3.74514E-05	3.74514E-05	0	0	5.07918E-10	1.0078E-08	#VALUE!	1.05859E-08	0.0105859
396666.283767677.2	396666.28	3767677	4.07122E-05	4.07122E-05	0	0	0	0	4.07122E-05	4.07122E-05	0	0	5.52141E-10	1.09554E-08	#VALUE!	1.15076E-08	0.0115076
396766.283767677.2	396766.28	3767677	4.57118E-05	4.57118E-05	0	0	0	0	4.57118E-05	4.57118E-05	0	0	6.19946E-10	1.23008E-08	#VALUE!	1.29207E-08	0.0129207
396866.283767677.2	396866.28	3767677	5.08424E-05	5.08424E-05	0	0	0	0	5.08424E-05	5.08424E-05	0	0	6.89527E-10	1.36814E-08	#VALUE!	1.43709E-08	0.0143709
396966.283767677.2	396966.28	3767677	5.3574E-05	5.3574E-05	0	0	0	0	5.3574E-05	5.3574E-05	0	0	7.26574E-10	1.44165E-08	#VALUE!	1.5143E-08	0.015143
397066.283767677.2	397066.28	3767677	5.11246E-05	5.11246E-05	0	0	0	0	5.11246E-05	5.11246E-05	0	0	6.93355E-10	1.37574E-08	#VALUE!	1.44507E-08	0.0144507
397166.283767677.2	397166.28	3767677	4.71482E-05	4.71482E-05	0	0	0	0	4.71482E-05	4.71482E-05	0	0	6.39426E-10	1.26873E-08	#VALUE!	1.33267E-08	0.0133267
397266.283767677.2	397266.28	3767677	4.26425E-05	4.26425E-05	0	0	0	0	4.26425E-05	4.26425E-05	0	0	5.7832E-10	1.14749E-08	#VALUE!	1.20532E-08	0.0120532
397366.283767677.2	397366.28	3767677	3.53372E-05	3.53372E-05	0	0	0	0	3.53372E-05	3.53372E-05	0	0	4.79245E-10	9.50904E-09	#VALUE!	9.98828E-09	0.0099883
397466.283767677.2	397466.28	3767677	3.04888E-05	3.04888E-05	0	0	0	0	3.04888E-05	3.04888E-05	0	0	4.13491E-10	8.20437E-09	#VALUE!	8.61786E-09	0.0086179
397566.283767677.2	397566.28	3767677	2.51616E-05	2.51616E-05	0	0	0	0	2.51616E-05	2.51616E-05	0	0	3.41244E-10	6.77086E-09	#VALUE!	7.1121E-09	0.0071121
397666.283767677.2	397666.28	3767677	2.08903E-05	2.08903E-05	0	0	0	0	2.08903E-05	2.08903E-05	0	0	2.83316E-10	5.62147E-09	#VALUE!	5.90479E-09	0.0059048
397766.283767677.2	397766.28	3767677	1.75187E-05	1.75187E-05	0	0	0	0	1.75187E-05	1.75187E-05	0	0	2.37589E-10	4.71417E-09	#VALUE!	4.95176E-09	0.0049518
397866.283767677.2	397866.28	3767677	1.47921E-05	1.47921E-05	0	0	0	0	1.47921E-05	1.47921E-05	0	0	2.00611E-10	3.98046E-09	#VALUE!	4.18108E-09	0.0041811
396166.283767777.2	396166.28	3767777	2.17396E-05	2.17396E-05	0	0	0	0	2.17396E-05	2.17396E-05	0	0	2.94833E-10	5.84999E-09	#VALUE!	6.14483E-09	0.0061448
396266.283767777.2	396266.28	3767777	2.65703E-05	2.65703E-05	0	0	0	0	2.65703E-05	2.65703E-05	0	0	3.60348E-10	7.14992E-09	#VALUE!	7.51026E-09	0.0075103
396366.283767777.2	396366.28	3767777	3.21621E-05	3.21621E-05	0	0	0	0	3.21621E-05	3.21621E-05	0	0	4.36184E-10	8.65463E-09	#VALUE!	9.09081E-09	0.0090908
396466.283767777.2	396466.28	3767777	3.95505E-05	3.95505E-05	0	0	0	0	3.95505E-05	3.95505E-05	0	0	5.36387E-10	1.06428E-08	#VALUE!	1.11792E-08	0.0111792
396566.283767777.2	396566.28	3767777	4.69869E-05	4.69869E-05	0	0	0	0	4.69869E-05	4.69869E-05	0	0	6.37239E-10	1.26439E-08	#VALUE!	1.32811E-08	0.0132811
396666.283767777.2	396666.28	3767777	5.65274E-05	5.65274E-05	0	0	0	0	5.65274E-05	5.65274E-05	0	0	7.66628E-10	1.52112E-08	#VALUE!	1.59778E-08	0.0159778
396766.283767777.2	396766.28	3767777	6.9553E-05	6.9553E-05	0	0	0	0	6.9553E-05	6.9553E-05	0	0	9.43282E-10	1.87163E-08	#VALUE!	1.96596E-08	0.0196596
396866.283767777.2	396866.28	3767777	8.24601E-05	8.24601E-05	0	0	0	0	8.24601E-05	8.24601E-05	0	0	1.11833E-09	2.21896E-08	#VALUE!	2.33079E-08	0.0233079
396966.283767777.2	396966.28	3767777	8.95412E-05	8.95412E-05	0	0	0	0	8.95412E-05	8.95412E-05	0	0	1.21436E-09	2.4095E-08	#VALUE!	2.53094E-08	0.0253094
397066.283767777.2	397066.28	3767777	8.57033E-05	8.57033E-05	0	0	0	0	8.57033E-05	8.57033E-05	0	0	1.16231E-09	2.30623E-08	#VALUE!	2.42246E-08	0.0242246
397166.283767777.2	397166.28	3767777	7.53287E-05	7.53287E-05	0	0	0	0	7.53287E-05	7.53287E-05	0	0	1.02161E-09	2.02705E-08	#VALUE!	2.12921E-08	0.0212921
397266.283767777.2	397266.28	3767777	6.42787E-05	6.42787E-05	0	0	0	0	6.42787E-05	6.42787E-05	0	0	8.71752E-10	1.7297E-08	#VALUE!	1.81688E-08	0.0181688
397366.283767777.2	397366.28	3767777	5.00184E-05	5.00184E-05	0	0	0	0	5.00184E-05	5.00184E-05	0	0	6.78352E-10	1.34597E-08	#VALUE!	1.4138E-08	0.014138
397466.283767777.2	397466.28	3767777	3.98655E-05	3.98655E-05	0	0	0	0	3.98655E-05	3.98655E-05	0	0	5.40658E-10	1.07276E-08	#VALUE!	1.12682E-08	0.0112682
397566.283767777.2	397566.28	3767777	3.11138E-05	3.11138E-05	0	0	0	0	3.11138E-05	3.11138E-05	0	0	4.21966E-10	8.37254E-09	#VALUE!	8.7945E-09	0.0087945
397666.283767777.2	397666.28	3767777	2.45669E-05	2.45669E-05	0	0	0	0	2.45669E-05	2.45669E-05	0	0	3.33178E-10	6.61083E-09	#VALUE!	6.944E-09	0.006944
397766.283767777.2	397766.28	3767777	2.00134E-05	2.00134E-05	0	0	0	0	2.00134E-05	2.00134E-05	0	0	2.71423E-10	5.38549E-09	#VALUE!	5.65692E-09	0.0056569
397866.283767777.2	397866.28	3767777	1.65712E-05	1.65712E-05	0	0	0	0	1.65712E-05	1.65712E-05	0	0	2.24739E-10	4.4592E-09	#VALUE!	4.68394E-09	0.0046839
396166.283767877.2	396166.28	3767877	2.36774E-05	2.36774E-05	0	0	0	0	2.36774E-05	2.36774E-05	0	0	3.21114E-10	6.37145E-09	#VALUE!	6.69257E-09	0.0066926
396266.283767877.2	396266.28	3767877	2.99168E-05	2.99168E-05	0	0	0	0	2.99168E-05	2.99168E-05	0	0	4.05733E-10	8.05044E-09	#VALUE!	8.45617E-09	0.0084562
396366.283767877.2	396366.28	3767877	3.81872E-05	3.81872E-05	0	0	0	0	3.81872E-05	3.81872E-05	0	0	5.17897E-10	1.0276E-08	#VALUE!	1.07939E-08	0.0107939
396466.283767877.2	396466.28	3767877	4.84863E-05	4.84863E-05	0	0	0	0	4.84863E-05	4.84863E-05	0	0	6.57573E-10	1.30474E-08	#VALUE!	1.3705E-08	0.013705
396566.283767877.2	396566.28	3767877	6.20486E-05	6.20486E-05	0	0	0	0	6.20486E-05	6.20486E-05	0	0	8.41507E-10	1.66969E-08	#VALUE!	1.75384E-08	0.0175384
397466.283767877.2	397466.28	3767877	5.22309E-05	5.22309E-05	0	0	0	0	5.22309E-05	5.22309E-05	0	0	7.08358E-10	1.4055E-08	#VALUE!	1.47634E-08	0.0147634
397566.283767877.2	397566.28	3767877	3.854E-05	3.854E-05	0	0	0	0	3.854E-05	3.854E-05	0	0	5.22682E-10	1.03709E-08	#VALUE!	1.08936E-08	0.0108936
397666.283767877.2	397666.28	3767877	2.91205E-05	2.91205E-05	0	0	0	0	2.91205E-05	2.91205E-05	0	0	3.94934E-10	7.83616E-09	#VALUE!	8.23109E-09	0.0082311
397766.283767877.2	397766.28	3767877	2.27904E-05	2.27904E-05	0	0	0	0	2.27904E-05	2.27904E-05	0	0	3.09084E-10	6.13276E-09	#VALUE!	6.44185E-09	0.0064418
397866.283767877.2	397866.28	3767877	1.82016E-05	1.82016E-05	0	0	0	0	1.82016E-05	1.82016E-05	0	0	2.46851E-10	4.89794E-09	#VALUE!	5.14479E-09	0.0051448
396166.283767977.2	396166.28	3767977	2.50155E-05	2.50155E-05	0	0	0	0	2.50155E-05	2.50155E-05	0	0	3.39261E-10	6.73153E-09	#VALUE!	7.07079E-09	0.0070708
396266.283767977.2	396266.28	3767977	3.27668E-05	3.27668E-05	0	0	0	0	3.27668E-05	3.27668E-05	0	0	4.44386E-10	8.81737E-09	#VALUE!	9.26176E-09	0.0092618
396366.283767977.2	396366.28	3767977	4.37437E-05	4.37437E-05	0	0	0	0	4.37437E-05	4.37437E-05	0	0	5.93255E-10	1.17712E-08	#VALUE!	1.23644E-08	0.0123644
396466.283767977.2	396466.28	3767977	5.87046E-05	5.87046E-05	0	0	0	0	5.87046E-05	5.87046E-05	0	0	7.96155E-10	1.57971E-08	#VALUE!	1.65932E-08	0.0165932
397466.283767977.2	397466.28	3767977	7.33077E-05	7.33077E-05	0	0	0	0	7.33077E-05	7.33077E-05	0	0	9.94203E-10	1.97267E-08	#VALUE!	2.07209E-08	0.0207209
397566.283767977.2	397566.28	3767977	4.77025E-05	4.77025E-05	0	0	0	0	4.77025E-05	4.77025E-05	0	0	6.46945E-10	1.28365E-08	#VALUE!	1.34834E-08	0.0134834
397666.283767977.2	397666.28	3767977	3.38529E-05	3.38529E-05	0	0	0	0	3.38529E-05	3.38529E-05	0	0	4.59115E-10	9.10963E-09	#VALUE!	9.56875E-09	0.0095687
397766.283767977.2	397766.28	3767977	2.51364E-05	2.51364E-05	0	0	0	0	2.51364E-05	2.51364E-05	0	0	3.40902E-10	6.76408E-09	#VALUE!	7.10498E-09	0.007105
397866.283767977.2	397866.28	3767977	1.93985E-05	1.93985E-05	0	0	0	0	1.93985E-05	1.93985E-05	0	0	2.63084E-10	5.22004E-09	#VALUE!	5.48312E-09	0.0054831
396166.283768077.2	396166.28	3768077	2.69508E-05	2.69508E-05	0	0	0	0	2.69508E-05	2.69508E-05	0	0	3.65508E-10	7.25231E-09	#VALUE!	7.61782E-09	0.0076178
396266.283768077.2	396266.28	3768077	3.49768E-05	3.49768E-05	0	0	0	0	3.49768E-05	3.49768E-05	0	0	4.74358E-10	9.41207E-09	#VALUE!	9.88643E-09	0.0098864
396366.283768077.2	396366.28	3768077	4.86551E-05	4.86551E-05	0	0	0	0	4.86551E-05	4.86551E-05	0	0	6.59863E-10	1.30928E-08	#VALUE!	1.37527E-08	0.0137527
396466.283768077.2	396466.28	3768077	7.20452E-05	7.20452E-05	0	0	0	0	7.20452E-05	7.20452E-05	0	0	9.77081E-10	1.9387E-08	#VALUE!	2.0364E-08	0.020364
397466.283768077.2	397466.28	3768077	9.81745E-05	9.81745E-05	0	0	0	0	9.81745E-05	9.81745E-05	0	0	1.33145E-09	2.64182E-08	#VALUE!	2.77497E-08	0.0277497
397566.283768077.2	397566.28	3768077	5.65148E-05	5.65148E-05	0	0	0	0	5.65148E-05	5.65148E-05	0	0	7.66457E-10	1.52078E-08	#VALUE!	1.59743E-08	0.0159743

Garvey Reservoir Rehab - Mitigated Reservoir Cover and Liner Work			Demolition - 2025	Demolition - 2026	ite Preparation - 202	te Preparation - 202	Grading - 2025	Grading - 2026	nfrastructure - 2025	nfrastructure - 2026	Paving - 2025	itectural Coating - 2	Child Risk				
Unique Identifier	X (UTM)	Y (UTM)	2025	2026	1900	1900	1900	1900	2026	2027	1900	1900	3rd Trimester	0<2	2<16	Total	per million
397666.283768077.2	397666.28	3768077	3.80234E-05	3.80234E-05	0	0	0	0	3.80234E-05	3.80234E-05	0	0	5.15676E-10	1.02319E-08	#VALUE!	1.07476E-08	0.0107476
397766.283768077.2	397766.28	3768077	2.79235E-05	2.79235E-05	0	0	0	0	2.79235E-05	2.79235E-05	0	0	3.787E-10	7.51406E-09	#VALUE!	7.89276E-09	0.0078928
397866.283768077.2	397866.28	3768077	2.12154E-05	2.12154E-05	0	0	0	0	2.12154E-05	2.12154E-05	0	0	2.87725E-10	5.70895E-09	#VALUE!	5.99667E-09	0.0059967
396166.283768177.2	396166.28	3768177	2.78101E-05	2.78101E-05	0	0	0	0	2.78101E-05	2.78101E-05	0	0	3.77162E-10	7.48354E-09	#VALUE!	7.86071E-09	0.0078607
396266.283768177.2	396266.28	3768177	3.71566E-05	3.71566E-05	0	0	0	0	3.71566E-05	3.71566E-05	0	0	5.0392E-10	9.99863E-09	#VALUE!	1.05025E-08	0.0105025
396366.283768177.2	396366.28	3768177	5.36723E-05	5.36723E-05	0	0	0	0	5.36723E-05	5.36723E-05	0	0	7.27907E-10	1.44429E-08	#VALUE!	1.51708E-08	0.0151708
396466.283768177.2	396466.28	3768177	8.339E-05	8.339E-05	0	0	0	0	8.339E-05	8.339E-05	0	0	1.13094E-09	2.24398E-08	#VALUE!	2.35707E-08	0.0235707
397466.283768177.2	397466.28	3768177	0.000116676	0.000116676	0	0	0	0	0.000116676	0.000116676	0	0	1.58237E-09	3.13968E-08	#VALUE!	3.29792E-08	0.0329792
397566.283768177.2	397566.28	3768177	6.45055E-05	6.45055E-05	0	0	0	0	6.45055E-05	6.45055E-05	0	0	8.74828E-10	1.73581E-08	#VALUE!	1.82329E-08	0.0182329
397666.283768177.2	397666.28	3768177	4.17731E-05	4.17731E-05	0	0	0	0	4.17731E-05	4.17731E-05	0	0	5.66529E-10	1.12409E-08	#VALUE!	1.18074E-08	0.0118074
397766.283768177.2	397766.28	3768177	3.03452E-05	3.03452E-05	0	0	0	0	3.03452E-05	3.03452E-05	0	0	4.11543E-10	8.16572E-09	#VALUE!	8.57726E-09	0.0085773
397866.283768177.2	397866.28	3768177	2.25132E-05	2.25132E-05	0	0	0	0	2.25132E-05	2.25132E-05	0	0	3.05325E-10	6.05817E-09	#VALUE!	6.3635E-09	0.0063635
396166.283768277.2	396166.28	3768277	2.78504E-05	2.78504E-05	0	0	0	0	2.78504E-05	2.78504E-05	0	0	3.77709E-10	7.49439E-09	#VALUE!	7.8721E-09	0.0078721
396266.283768277.2	396266.28	3768277	3.6771E-05	3.6771E-05	0	0	0	0	3.6771E-05	3.6771E-05	0	0	4.98691E-10	9.89488E-09	#VALUE!	1.03936E-08	0.0103936
396366.283768277.2	396366.28	3768277	5.39319E-05	5.39319E-05	0	0	0	0	5.39319E-05	5.39319E-05	0	0	7.31427E-10	1.45128E-08	#VALUE!	1.52442E-08	0.0152442
396466.283768277.2	396466.28	3768277	8.77545E-05	8.77545E-05	0	0	0	0	8.77545E-05	8.77545E-05	0	0	1.19013E-09	2.36143E-08	#VALUE!	2.48044E-08	0.0248044
397366.283768277.2	397366.28	3768277	0.000254973	0.000254973	0	0	0	0	0.000254973	0.000254973	0	0	3.45796E-09	6.86118E-08	#VALUE!	7.20698E-08	0.0720698
397466.283768277.2	397466.28	3768277	0.000121189	0.000121189	0	0	0	0	0.000121189	0.000121189	0	0	1.64357E-09	3.26113E-08	#VALUE!	3.42549E-08	0.0342549
397566.283768277.2	397566.28	3768277	7.11733E-05	7.11733E-05	0	0	0	0	7.11733E-05	7.11733E-05	0	0	9.65256E-10	1.91523E-08	#VALUE!	2.01176E-08	0.0201176
397666.283768277.2	397666.28	3768277	4.54195E-05	4.54195E-05	0	0	0	0	4.54195E-05	4.54195E-05	0	0	6.15982E-10	1.22221E-08	#VALUE!	1.28381E-08	0.0128381
397766.283768277.2	397766.28	3768277	3.20083E-05	3.20083E-05	0	0	0	0	3.20083E-05	3.20083E-05	0	0	4.34099E-10	8.61326E-09	#VALUE!	9.04736E-09	0.0090474
397866.283768277.2	397866.28	3768277	2.44636E-05	2.44636E-05	0	0	0	0	2.44636E-05	2.44636E-05	0	0	3.31777E-10	6.58302E-09	#VALUE!	6.9148E-09	0.0069148
396166.283768377.2	396166.28	3768377	2.68853E-05	2.68853E-05	0	0	0	0	2.68853E-05	2.68853E-05	0	0	3.6462E-10	7.23468E-09	#VALUE!	7.5993E-09	0.0075993
396266.283768377.2	396266.28	3768377	3.54052E-05	3.54052E-05	0	0	0	0	3.54052E-05	3.54052E-05	0	0	4.80168E-10	9.52735E-09	#VALUE!	1.00075E-08	0.0100075
396366.283768377.2	396366.28	3768377	5.1049E-05	5.1049E-05	0	0	0	0	5.1049E-05	5.1049E-05	0	0	6.9233E-10	1.3737E-08	#VALUE!	1.44293E-08	0.0144293
396466.283768377.2	396466.28	3768377	8.22737E-05	8.22737E-05	0	0	0	0	8.22737E-05	8.22737E-05	0	0	1.1158E-09	2.21394E-08	#VALUE!	2.32552E-08	0.0232552
397266.283768377.2	397266.28	3768377	0.000316518	0.000316518	0	0	0	0	0.000316518	0.000316518	0	0	4.29263E-09	8.51731E-08	#VALUE!	8.94657E-08	0.0894657
397366.283768377.2	397366.28	3768377	0.000192214	0.000192214	0	0	0	0	0.000192214	0.000192214	0	0	2.60681E-09	5.17237E-08	#VALUE!	5.43305E-08	0.0543305
397466.283768377.2	397466.28	3768377	0.000115189	0.000115189	0	0	0	0	0.000115189	0.000115189	0	0	1.5622E-09	3.09968E-08	#VALUE!	3.2559E-08	0.032559
397566.283768377.2	397566.28	3768377	7.40183E-05	7.40183E-05	0	0	0	0	7.40183E-05	7.40183E-05	0	0	1.00384E-09	1.99179E-08	#VALUE!	2.09218E-08	0.0209218
397666.283768377.2	397666.28	3768377	4.97538E-05	4.97538E-05	0	0	0	0	4.97538E-05	4.97538E-05	0	0	6.74764E-10	1.33885E-08	#VALUE!	1.40632E-08	0.0140632
397766.283768377.2	397766.28	3768377	3.5128E-05	3.5128E-05	0	0	0	0	3.5128E-05	3.5128E-05	0	0	4.76408E-10	9.45275E-09	#VALUE!	9.92916E-09	0.0099292
397866.283768377.2	397866.28	3768377	2.6913E-05	2.6913E-05	0	0	0	0	2.6913E-05	2.6913E-05	0	0	3.64996E-10	7.24214E-09	#VALUE!	7.60713E-09	0.0076071
396166.283768477.2	396166.28	3768477	2.51843E-05	2.51843E-05	0	0	0	0	2.51843E-05	2.51843E-05	0	0	3.41551E-10	6.77696E-09	#VALUE!	7.11851E-09	0.0071185
396266.283768477.2	396266.28	3768477	3.30944E-05	3.30944E-05	0	0	0	0	3.30944E-05	3.30944E-05	0	0	4.48829E-10	8.90553E-09	#VALUE!	9.35435E-09	0.0093544
396366.283768477.2	396366.28	3768477	4.67072E-05	4.67072E-05	0	0	0	0	4.67072E-05	4.67072E-05	0	0	6.33445E-10	1.25686E-08	#VALUE!	1.32021E-08	0.0132021
396466.283768477.2	396466.28	3768477	6.95731E-05	6.95731E-05	0	0	0	0	6.95731E-05	6.95731E-05	0	0	9.43555E-10	1.87217E-08	#VALUE!	1.96653E-08	0.0196653
397166.283768477.2	397166.28	3768477	0.000237369	0.000237369	0	0	0	0	0.000237369	0.000237369	0	0	3.21921E-09	6.38746E-08	#VALUE!	6.70938E-08	0.0670938
397266.283768477.2	397266.28	3768477	0.00020094	0.00020094	0	0	0	0	0.00020094	0.00020094	0	0	2.72516E-09	5.40719E-08	#VALUE!	5.67971E-08	0.0567971
397366.283768477.2	397366.28	3768477	0.000149012	0.000149012	0	0	0	0	0.000149012	0.000149012	0	0	2.02091E-09	4.00983E-08	#VALUE!	4.21192E-08	0.0421192
397466.283768477.2	397466.28	3768477	0.000103398	0.000103398	0	0	0	0	0.000103398	0.000103398	0	0	1.40229E-09	2.78239E-08	#VALUE!	2.92262E-08	0.0292262
397566.283768477.2	397566.28	3768477	6.90389E-05	6.90389E-05	0	0	0	0	6.90389E-05	6.90389E-05	0	0	9.3631E-10	1.8578E-08	#VALUE!	1.95143E-08	0.0195143
397666.283768477.2	397666.28	3768477	4.87912E-05	4.87912E-05	0	0	0	0	4.87912E-05	4.87912E-05	0	0	6.61709E-10	1.31294E-08	#VALUE!	1.37911E-08	0.0137911
397766.283768477.2	397766.28	3768477	3.71364E-05	3.71364E-05	0	0	0	0	3.71364E-05	3.71364E-05	0	0	5.03646E-10	9.9932E-09	#VALUE!	1.04968E-08	0.0104968
397866.283768477.2	397866.28	3768477	2.78353E-05	2.78353E-05	0	0	0	0	2.78353E-05	2.78353E-05	0	0	3.77504E-10	7.49032E-09	#VALUE!	7.86783E-09	0.0078678
396166.283768577.2	396166.28	3768577	2.25132E-05	2.25132E-05	0	0	0	0	2.25132E-05	2.25132E-05	0	0	3.05325E-10	6.05817E-09	#VALUE!	6.3635E-09	0.0063635
396266.283768577.2	396266.28	3768577	2.97857E-05	2.97857E-05	0	0	0	0	2.97857E-05	2.97857E-05	0	0	4.03956E-10	8.01518E-09	#VALUE!	8.41913E-09	0.0084191
396366.283768577.2	396366.28	3768577	4.02712E-05	4.02712E-05	0	0	0	0	4.02712E-05	4.02712E-05	0	0	5.46161E-10	1.08368E-08	#VALUE!	1.13829E-08	0.0113829
396466.283768577.2	396466.28	3768577	5.65602E-05	5.65602E-05	0	0	0	0	5.65602E-05	5.65602E-05	0	0	7.67072E-10	1.522E-08	#VALUE!	1.59871E-08	0.0159871
396566.283768577.2	396566.28	3768577	8.94832E-05	8.94832E-05	0	0	0	0	8.94832E-05	8.94832E-05	0	0	1.21358E-09	2.40794E-08	#VALUE!	2.5293E-08	0.025293
396866.283768577.2	396866.28	3768577	0.00023663	0.00023663	0	0	0	0	0.00023663	0.00023663	0	0	3.20919E-09	6.36759E-08	#VALUE!	6.68851E-08	0.0668851
396966.283768577.2	396966.28	3768577	0.000216786	0.000216786	0	0	0	0	0.000216786	0.000216786	0	0	2.94006E-09	5.83358E-08	#VALUE!	6.12759E-08	0.0612759
397066.283768577.2	397066.28	3768577	0.000184782	0.000184782	0	0	0	0	0.000184782	0.000184782	0	0	2.50603E-09	4.97239E-08	#VALUE!	5.223E-08	0.05223
397166.283768577.2	397166.28	3768577	0.000160692	0.000160692	0	0	0	0	0.000160692	0.000160692	0	0	2.17931E-09	4.32413E-08	#VALUE!	4.54206E-08	0.0454206
397266.283768577.2	397266.28	3768577	0.000135694	0.000135694	0	0	0	0	0.000135694	0.000135694	0	0	1.84029E-09	3.65145E-08	#VALUE!	3.83548E-08	0.0383548
397366.283768577.2	397366.28	3768577	0.00011251	0.00011251	0	0	0	0	0.00011251	0.00011251	0	0	1.52587E-09	3.02759E-08	#VALUE!	3.18018E-08	0.0318018
397466.283768577.2	397466.28	3768577	8.62779E-05	8.62779E-05	0	0	0	0	8.62779E-05	8.62779E-05	0	0	1.17011E-09	2.32169E-08	#VALUE!	2.4387E-08	0.024387
397566.283768577.2	397566.28	3768577	6.38428E-05	6.38428E-05	0	0	0	0	6.38428E-05	6.38428E-05	0	0	8.6584E-10	1.71797E-08	#VALUE!	1.80456E-08	0.0180456
397666.283768577.2	397666.28	3768577	4.73548E-05	4.73548E-05	0	0	0	0	4.73548E-05	4.73548E-05	0	0	6.42228E-10	1.27429E-08	#VALUE!	1.33851E-08	0.0133851
397766.283768577.2	397766.28	3768577	3.55715E-05	3.55715E-05	0	0	0	0	3.55715E-05	3.55715E-05	0	0	4.82423E-10	9.5721E-09	#VALUE!	1.00545E-08	0.0100545
397866.283768577.2	397866.28	3768577	2.77899E-05	2.77899E-05	0	0	0	0	2.77899E-05	2.77899E-05	0	0	3.76889E-10	7.47812E-09	#VALUE!	7.85501E-09	0.007855
396166.283768677.2	396166.28	3768677	2.02956E-05	2.02956E-05	0	0	0	0	2.02956E-05	2.02956E-05	0	0	2.75251E-10	5.46144E-09	#VALUE!	5.73669E-09	0.0057367
396266.283768677.2	396266.28	3768677	2.56707E-05	2.56707E-05	0	0	0	0	2.56707E-05	2.56707E-05	0	0	3.48147E-10	6.90783E-09	#VALUE!	7.25598E-09	0.007256
396366.283768677.2	396366.28	3768677	3.40621E-05	3.40621E-05	0	0	0	0	3.40621E-05	3.40621E-05	0	0	4.61952E-10	9.16592E-09	#VALUE!	9.62787E-09	0.0096279
396466.283768677.2	396466.28	3768677	4.51599E-05	4.51599E-05	0	0	0	0	4.51599E-05	4.51599E-05	0	0	6.12461E-10	1.21523E-08	#VALUE!	1.27647E-08	0.0127647
396566.283768677.2	396566.28	3768677	6.38201E-05	6.38201E-05	0	0	0	0	6.38201E-05	6.38201E-05	0	0	8.65532E-10	1.71736E-08	#VALUE!	1.80392E-08	0.0180392
396666.283768677.2	396666.28	3768677	8.95891E-05	8.95891E-05	0	0	0	0	8.95891E-05	8.95891E-05	0	0	1.21501E-09	2.41079E-08	#VALUE!	2.53229E-08	0.0253229
396766.283768677.2	396766.28	3768677	0.00011597	0.00011597	0	0	0	0	0.00011597	0.00011597	0	0	1.5728E-09	3.1207E-08	#VALUE!	3.27798E-08	0.0327798
396866.283768677.2	396866.28	3768677	0.000132912	0.000132912	0	0	0	0	0.000132912	0.000132912	0	0	1.80256E-09	3.57659E-08	#VALUE!	3.75684E-08	0.0375684
396966.283768677.2	396966.28	3768677	0.00013364	0.00013364	0	0	0	0	0.00013364	0.00013364	0	0	1.81244E-09	3.59618E-08	#VALUE!	3.77743E-08	0.0377743
397066.283768677.2	397066.28	3768677	0.000125677	0.000125677	0	0	0	0	0.000125677	0.000125677	0	0	1.70444E-09	3.3819E-08	#VALUE!	3.55235E-08	0.0355235

Garvey Reservoir Rehab - Mitigated Reservoir Cover and Liner Work			Demolition - 2025	Demolition - 2026	Site Preparation - 202	Site Preparation - 202	Grading - 2025	Grading - 2026	Infrastructure - 2025	Infrastructure - 2026	Paving - 2025	Architectural Coating - 2	Child Risk				
Unique Identifier	X (UTM)	Y (UTM)	2025	2026	1900	1900	1900	1900	2026	2027	1900	1900	3rd Trimester	0<2	2<16	Total	per million
397166.283768677.2	397166.28	3768677	0.000112957	0.000112957	0	0	0	0	0.000112957	0.000112957	0	0	1.53192E-09	3.0396E-08	#VALUE!	3.19279E-08	0.0319279
397366.283768677.2	397366.28	3768677	8.67768E-05	8.67768E-05	0	0	0	0	8.67768E-05	8.67768E-05	0	0	1.17687E-09	2.33512E-08	#VALUE!	2.4528E-08	0.024528
397466.283768677.2	397466.28	3768677	7.07046E-05	7.07046E-05	0	0	0	0	7.07046E-05	7.07046E-05	0	0	9.589E-10	1.90262E-08	#VALUE!	1.99851E-08	0.0199851
397566.283768677.2	397566.28	3768677	5.60637E-05	5.60637E-05	0	0	0	0	5.60637E-05	5.60637E-05	0	0	7.60339E-10	1.50864E-08	#VALUE!	1.58468E-08	0.0158468
397666.283768677.2	397666.28	3768677	4.39327E-05	4.39327E-05	0	0	0	0	4.39327E-05	4.39327E-05	0	0	5.95818E-10	1.1822E-08	#VALUE!	1.24179E-08	0.0124179
397766.283768677.2	397766.28	3768677	3.4178E-05	3.4178E-05	0	0	0	0	3.4178E-05	3.4178E-05	0	0	4.63524E-10	9.19711E-09	#VALUE!	9.66063E-09	0.0096606
397866.283768677.2	397866.28	3768677	2.73313E-05	2.73313E-05	0	0	0	0	2.73313E-05	2.73313E-05	0	0	3.70669E-10	7.3547E-09	#VALUE!	7.72537E-09	0.0077254
396166.283768777.2	396166.28	3768777	1.84788E-05	1.84788E-05	0	0	0	0	1.84788E-05	1.84788E-05	0	0	2.5061E-10	4.97253E-09	#VALUE!	5.22314E-09	0.0052231
396266.283768777.2	396266.28	3768777	2.25233E-05	2.25233E-05	0	0	0	0	2.25233E-05	2.25233E-05	0	0	3.05462E-10	6.06088E-09	#VALUE!	6.36635E-09	0.0063663
396366.283768777.2	396366.28	3768777	2.88584E-05	2.88584E-05	0	0	0	0	2.88584E-05	2.88584E-05	0	0	3.91379E-10	7.76563E-09	#VALUE!	8.15701E-09	0.008157
396466.283768777.2	396466.28	3768777	3.67912E-05	3.67912E-05	0	0	0	0	3.67912E-05	3.67912E-05	0	0	4.98964E-10	9.9003E-09	#VALUE!	1.03993E-08	0.0103993
396566.283768777.2	396566.28	3768777	4.706E-05	4.706E-05	0	0	0	0	4.706E-05	4.706E-05	0	0	6.3823E-10	1.26636E-08	#VALUE!	1.33018E-08	0.0133018
396666.283768777.2	396666.28	3768777	6.08617E-05	6.08617E-05	0	0	0	0	6.08617E-05	6.08617E-05	0	0	8.2541E-10	1.63775E-08	#VALUE!	1.7203E-08	0.017203
396766.283768777.2	396766.28	3768777	7.57193E-05	7.57193E-05	0	0	0	0	7.57193E-05	7.57193E-05	0	0	1.02691E-09	2.03756E-08	#VALUE!	2.14025E-08	0.0214025
396866.283768777.2	396866.28	3768777	8.66055E-05	8.66055E-05	0	0	0	0	8.66055E-05	8.66055E-05	0	0	1.17455E-09	2.3305E-08	#VALUE!	2.44796E-08	0.0244796
396966.283768777.2	396966.28	3768777	9.0403E-05	9.0403E-05	0	0	0	0	9.0403E-05	9.0403E-05	0	0	1.22605E-09	2.43269E-08	#VALUE!	2.5553E-08	0.025553
397066.283768777.2	397066.28	3768777	8.88104E-05	8.88104E-05	0	0	0	0	8.88104E-05	8.88104E-05	0	0	1.20445E-09	2.38984E-08	#VALUE!	2.51028E-08	0.0251028
397166.283768777.2	397166.28	3768777	8.2949E-05	8.2949E-05	0	0	0	0	8.2949E-05	8.2949E-05	0	0	1.12496E-09	2.23211E-08	#VALUE!	2.34461E-08	0.0234461
397266.283768777.2	397266.28	3768777	7.68003E-05	7.68003E-05	0	0	0	0	7.68003E-05	7.68003E-05	0	0	1.04157E-09	2.06665E-08	#VALUE!	2.17081E-08	0.0217081
397366.283768777.2	397366.28	3768777	6.75093E-05	6.75093E-05	0	0	0	0	6.75093E-05	6.75093E-05	0	0	9.15565E-10	1.81664E-08	#VALUE!	1.90819E-08	0.0190819
397466.283768777.2	397466.28	3768777	5.69407E-05	5.69407E-05	0	0	0	0	5.69407E-05	5.69407E-05	0	0	7.72233E-10	1.53224E-08	#VALUE!	1.60946E-08	0.0160946
397566.283768777.2	397566.28	3768777	4.70952E-05	4.70952E-05	0	0	0	0	4.70952E-05	4.70952E-05	0	0	6.38708E-10	1.26731E-08	#VALUE!	1.33118E-08	0.0133118
397666.283768777.2	397666.28	3768777	3.86358E-05	3.86358E-05	0	0	0	0	3.86358E-05	3.86358E-05	0	0	5.23981E-10	1.03967E-08	#VALUE!	1.09207E-08	0.0109207
397766.283768777.2	397766.28	3768777	3.15774E-05	3.15774E-05	0	0	0	0	3.15774E-05	3.15774E-05	0	0	4.28255E-10	8.49731E-09	#VALUE!	8.92556E-09	0.0089256
397866.283768777.2	397866.28	3768777	2.60436E-05	2.60436E-05	0	0	0	0	2.60436E-05	2.60436E-05	0	0	3.53205E-10	7.00819E-09	#VALUE!	7.3614E-09	0.0073614
396166.283768877.2	396166.28	3768877	1.64653E-05	1.64653E-05	0	0	0	0	1.64653E-05	1.64653E-05	0	0	2.23304E-10	4.43072E-09	#VALUE!	4.65403E-09	0.004654
396266.283768877.2	396266.28	3768877	1.99403E-05	1.99403E-05	0	0	0	0	1.99403E-05	1.99403E-05	0	0	2.70432E-10	5.36583E-09	#VALUE!	5.63626E-09	0.0056363
396366.283768877.2	396366.28	3768877	2.40554E-05	2.40554E-05	0	0	0	0	2.40554E-05	2.40554E-05	0	0	3.26241E-10	6.47317E-09	#VALUE!	6.79941E-09	0.0067994
396466.283768877.2	396466.28	3768877	3.03578E-05	3.03578E-05	0	0	0	0	3.03578E-05	3.03578E-05	0	0	4.11714E-10	8.16911E-09	#VALUE!	8.58082E-09	0.0085808
396566.283768877.2	396566.28	3768877	3.72952E-05	3.72952E-05	0	0	0	0	3.72952E-05	3.72952E-05	0	0	5.05799E-10	1.00359E-08	#VALUE!	1.05417E-08	0.0105417
396666.283768877.2	396666.28	3768877	4.52809E-05	4.52809E-05	0	0	0	0	4.52809E-05	4.52809E-05	0	0	6.14102E-10	1.21848E-08	#VALUE!	1.27989E-08	0.0127989
396766.283768877.2	396766.28	3768877	5.43905E-05	5.43905E-05	0	0	0	0	5.43905E-05	5.43905E-05	0	0	7.37647E-10	1.46362E-08	#VALUE!	1.53738E-08	0.0153738
396866.283768877.2	396866.28	3768877	6.3684E-05	6.3684E-05	0	0	0	0	6.3684E-05	6.3684E-05	0	0	8.63687E-10	1.7137E-08	#VALUE!	1.80007E-08	0.0180007
396966.283768877.2	396966.28	3768877	6.71086E-05	6.71086E-05	0	0	0	0	6.71086E-05	6.71086E-05	0	0	9.10131E-10	1.80586E-08	#VALUE!	1.89687E-08	0.0189687
397066.283768877.2	397066.28	3768877	6.61359E-05	6.61359E-05	0	0	0	0	6.61359E-05	6.61359E-05	0	0	8.96939E-10	1.77968E-08	#VALUE!	1.86938E-08	0.0186938
397166.283768877.2	397166.28	3768877	6.34673E-05	6.34673E-05	0	0	0	0	6.34673E-05	6.34673E-05	0	0	8.60747E-10	1.70787E-08	#VALUE!	1.79394E-08	0.0179394
397266.283768877.2	397266.28	3768877	5.97529E-05	5.97529E-05	0	0	0	0	5.97529E-05	5.97529E-05	0	0	8.10373E-10	1.60792E-08	#VALUE!	1.68895E-08	0.0168895
397366.283768877.2	397366.28	3768877	5.36143E-05	5.36143E-05	0	0	0	0	5.36143E-05	5.36143E-05	0	0	7.27121E-10	1.44273E-08	#VALUE!	1.51544E-08	0.0151544
397466.283768877.2	397466.28	3768877	4.7007E-05	4.7007E-05	0	0	0	0	4.7007E-05	4.7007E-05	0	0	6.37512E-10	1.26493E-08	#VALUE!	1.32868E-08	0.0132868
397566.283768877.2	397566.28	3768877	4.03443E-05	4.03443E-05	0	0	0	0	4.03443E-05	4.03443E-05	0	0	5.47152E-10	1.08564E-08	#VALUE!	1.14036E-08	0.0114036
397666.283768877.2	397666.28	3768877	3.39033E-05	3.39033E-05	0	0	0	0	3.39033E-05	3.39033E-05	0	0	4.59799E-10	9.1232E-09	#VALUE!	9.583E-09	0.009583
397766.283768877.2	397766.28	3768877	2.85787E-05	2.85787E-05	0	0	0	0	2.85787E-05	2.85787E-05	0	0	3.87586E-10	7.69037E-09	#VALUE!	8.07795E-09	0.008078
397866.283768877.2	397866.28	3768877	2.42948E-05	2.42948E-05	0	0	0	0	2.42948E-05	2.42948E-05	0	0	3.29487E-10	6.53759E-09	#VALUE!	6.86708E-09	0.0068671
3964253767739	396425	3767739	3.40167E-05	3.40167E-05	0	0	0	0	3.40167E-05	3.40167E-05	0	0	4.61337E-10	9.15371E-09	#VALUE!	9.61505E-09	0.009615
3964753767739	396475	3767739	3.7396E-05	3.7396E-05	0	0	0	0	3.7396E-05	3.7396E-05	0	0	5.07166E-10	1.0063E-08	#VALUE!	1.05702E-08	0.0105702
3965253767739	396525	3767739	4.02385E-05	4.02385E-05	0	0	0	0	4.02385E-05	4.02385E-05	0	0	5.45716E-10	1.08279E-08	#VALUE!	1.13737E-08	0.0113737
3965753767739	396575	3767739	4.41141E-05	4.41141E-05	0	0	0	0	4.41141E-05	4.41141E-05	0	0	5.98279E-10	1.18709E-08	#VALUE!	1.24691E-08	0.0124691
3966253767739	396625	3767739	4.62939E-05	4.62939E-05	0	0	0	0	4.62939E-05	4.62939E-05	0	0	6.2784E-10	1.24574E-08	#VALUE!	1.30853E-08	0.0130853
3966753767739	396675	3767739	5.00688E-05	5.00688E-05	0	0	0	0	5.00688E-05	5.00688E-05	0	0	6.79036E-10	1.34732E-08	#VALUE!	1.41523E-08	0.0141523
3967253767739	396725	3767739	5.57966E-05	5.57966E-05	0	0	0	0	5.57966E-05	5.57966E-05	0	0	7.56717E-10	1.50146E-08	#VALUE!	1.57713E-08	0.0157713
3967753767739	396775	3767739	5.88583E-05	5.88583E-05	0	0	0	0	5.88583E-05	5.88583E-05	0	0	7.9824E-10	1.58384E-08	#VALUE!	1.66367E-08	0.0166367
3968253767739	396825	3767739	6.38453E-05	6.38453E-05	0	0	0	0	6.38453E-05	6.38453E-05	0	0	8.65874E-10	1.71804E-08	#VALUE!	1.80463E-08	0.0180463
3968753767739	396875	3767739	6.87038E-05	6.87038E-05	0	0	0	0	6.87038E-05	6.87038E-05	0	0	9.31764E-10	1.84878E-08	#VALUE!	1.94196E-08	0.0194196
3969253767739	396925	3767739	7.11935E-05	7.11935E-05	0	0	0	0	7.11935E-05	7.11935E-05	0	0	9.6553E-10	1.91578E-08	#VALUE!	2.01233E-08	0.0201233
3969753767739	396975	3767739	7.21788E-05	7.21788E-05	0	0	0	0	7.21788E-05	7.21788E-05	0	0	9.78893E-10	1.94229E-08	#VALUE!	2.04018E-08	0.0204018
3970253767739	397025	3767739	7.11859E-05	7.11859E-05	0	0	0	0	7.11859E-05	7.11859E-05	0	0	9.65427E-10	1.91557E-08	#VALUE!	2.01212E-08	0.0201212
3970753767739	397075	3767739	6.83459E-05	6.83459E-05	0	0	0	0	6.83459E-05	6.83459E-05	0	0	9.26911E-10	1.83915E-08	#VALUE!	1.93184E-08	0.0193184
3971253767739	397125	3767739	6.47626E-05	6.47626E-05	0	0	0	0	6.47626E-05	6.47626E-05	0	0	8.78314E-10	1.74272E-08	#VALUE!	1.83056E-08	0.0183056
3971753767739	397175	3767739	6.10885E-05	6.10885E-05	0	0	0	0	6.10885E-05	6.10885E-05	0	0	8.28486E-10	1.64386E-08	#VALUE!	1.72671E-08	0.0172671
3972253767739	397225	3767739	5.6918E-05	5.6918E-05	0	0	0	0	5.6918E-05	5.6918E-05	0	0	7.71925E-10	1.53163E-08	#VALUE!	1.60882E-08	0.0160882
3972753767739	397275	3767739	5.32867E-05	5.32867E-05	0	0	0	0	5.32867E-05	5.32867E-05	0	0	7.22678E-10	1.43392E-08	#VALUE!	1.50618E-08	0.0150618
3973253767739	397325	3767739	4.77429E-05	4.77429E-05	0	0	0	0	4.77429E-05	4.77429E-05	0	0	6.47491E-10	1.28473E-08	#VALUE!	1.34948E-08	0.0134948
3973753767739	397375	3767739	4.25089E-05	4.25089E-05	0	0	0	0	4.25089E-05	4.25089E-05	0	0	5.76509E-10	1.14389E-08	#VALUE!	1.20154E-08	0.0120154
3974253767739	397425	3767739	3.81242E-05	3.81242E-05	0	0	0	0	3.81242E-05	3.81242E-05	0	0	5.17043E-10	1.0259E-08	#VALUE!	1.07761E-08	0.0107761
3974753767739	397475	3767739	3.51381E-05	3.51381E-05	0	0	0	0	3.51381E-05	3.51381E-05	0	0	4.76545E-10	9.45547E-09	#VALUE!	9.93201E-09	0.009932
3975253767739	397525	3767739	3.14035E-05	3.14035E-05	0	0	0	0	3.14035E-05	3.14035E-05	0	0	4.25897E-10	8.45052E-09	#VALUE!	8.87642E-09	0.0088764
3964253767789	396425	3767789	3.74539E-05	3.74539E-05	0	0	0	0	3.74539E-05	3.74539E-05	0	0	5.07952E-10	1.00786E-08	#VALUE!	1.05866E-08	0.0105866
3964753767789	396475	3767789	4.11961E-05	4.11961E-05	0	0	0	0	4.11961E-05	4.11961E-05	0	0	5.58703E-10	1.10856E-08	#VALUE!	1.16443E-08	0.0116443
3965253767789	396525	3767789	4.49407E-05	4.49407E-05	0	0	0	0	4.49407E-05	4.49407E-05	0	0	6.09488E-10	1.20933E-08	#VALUE!	1.27028E-08	0.0127028
3965753767789	396575	3767789	4.90255E-05	4.90255E-05	0	0	0	0	4.90255E-05	4.90255E-05	0	0	6.64887E-10	1.31925E-08	#VALUE!	1.38574E-08	0.0138574
3966253767789	396625	3767789	5.41183E-05	5.41183E-05	0	0	0	0	5.41183E-05	5.41183E-05	0	0	7.33956E-10	1.45629E-08	#VALUE!	1.52969E-08	0.0152969

Garvey Reservoir Rehab - Mitigated Reservoir Cover and Liner Work			Demolition - 2025	Demolition - 2026	ite Preparation - 202	te Preparation - 202	Grading - 2025	Grading - 2026	nfrastructure - 2025	nfrastructure - 2026	Paving - 2025	itectural Coating - 2	Child Risk				
Unique Identifier	X (UTM)	Y (UTM)	2025	2026	1900	1900	1900	1900	2026	2027	1900	1900	3rd Trimester	0<2	2<16	Total	per million
3966753767789	396675	3767789	6.01939E-05	6.01939E-05	0	0	0	0	6.01939E-05	6.01939E-05	0	0	8.16353E-10	1.61978E-08	#VALUE!	1.70142E-08	0.0170142
3967253767789	396725	3767789	6.82829E-05	6.82829E-05	0	0	0	0	6.82829E-05	6.82829E-05	0	0	9.26057E-10	1.83746E-08	#VALUE!	1.93006E-08	0.0193006
3967753767789	396775	3767789	7.45349E-05	7.45349E-05	0	0	0	0	7.45349E-05	7.45349E-05	0	0	1.01085E-09	2.00569E-08	#VALUE!	2.10678E-08	0.0210678
3968253767789	396825	3767789	8.21073E-05	8.21073E-05	0	0	0	0	8.21073E-05	8.21073E-05	0	0	1.11354E-09	2.20946E-08	#VALUE!	2.32082E-08	0.0232082
3968753767789	396875	3767789	8.85508E-05	8.85508E-05	0	0	0	0	8.85508E-05	8.85508E-05	0	0	1.20093E-09	2.38285E-08	#VALUE!	2.50295E-08	0.0250295
3969253767789	396925	3767789	9.28398E-05	9.28398E-05	0	0	0	0	9.28398E-05	9.28398E-05	0	0	1.2591E-09	2.49827E-08	#VALUE!	2.62418E-08	0.0262418
3969753767789	396975	3767789	9.61888E-05	9.61888E-05	0	0	0	0	9.61888E-05	9.61888E-05	0	0	1.30452E-09	2.58839E-08	#VALUE!	2.71884E-08	0.0271884
3970253767789	397025	3767789	9.5453E-05	9.5453E-05	0	0	0	0	9.5453E-05	9.5453E-05	0	0	1.29454E-09	2.56859E-08	#VALUE!	2.69804E-08	0.0269804
3970753767789	397075	3767789	9.12648E-05	9.12648E-05	0	0	0	0	9.12648E-05	9.12648E-05	0	0	1.23774E-09	2.45589E-08	#VALUE!	2.57966E-08	0.0257966
3971253767789	397125	3767789	8.55017E-05	8.55017E-05	0	0	0	0	8.55017E-05	8.55017E-05	0	0	1.15958E-09	2.3008E-08	#VALUE!	2.41676E-08	0.0241676
3971753767789	397175	3767789	7.91893E-05	7.91893E-05	0	0	0	0	7.91893E-05	7.91893E-05	0	0	1.07397E-09	2.13094E-08	#VALUE!	2.23834E-08	0.0223834
3972253767789	397225	3767789	7.21888E-05	7.21888E-05	0	0	0	0	7.21888E-05	7.21888E-05	0	0	9.79029E-10	1.94256E-08	#VALUE!	2.04046E-08	0.0204046
3972753767789	397275	3767789	6.64812E-05	6.64812E-05	0	0	0	0	6.64812E-05	6.64812E-05	0	0	9.01621E-10	1.78897E-08	#VALUE!	1.87913E-08	0.0187913
3973253767789	397325	3767789	5.88861E-05	5.88861E-05	0	0	0	0	5.88861E-05	5.88861E-05	0	0	7.98616E-10	1.58459E-08	#VALUE!	1.66445E-08	0.0166445
3973753767789	397375	3767789	5.09659E-05	5.09659E-05	0	0	0	0	5.09659E-05	5.09659E-05	0	0	6.91202E-10	1.37146E-08	#VALUE!	1.44058E-08	0.0144058
3974253767789	397425	3767789	4.4477E-05	4.4477E-05	0	0	0	0	4.4477E-05	4.4477E-05	0	0	6.032E-10	1.19685E-08	#VALUE!	1.25717E-08	0.0125717
3974753767789	397475	3767789	4.02889E-05	4.02889E-05	0	0	0	0	4.02889E-05	4.02889E-05	0	0	5.464E-10	1.08415E-08	#VALUE!	1.13879E-08	0.0113879
3975253767789	397525	3767789	3.53372E-05	3.53372E-05	0	0	0	0	3.53372E-05	3.53372E-05	0	0	4.79245E-10	9.50904E-09	#VALUE!	9.98828E-09	0.0099883
3964253767839	396425	3767839	4.12263E-05	4.12263E-05	0	0	0	0	4.12263E-05	4.12263E-05	0	0	5.59113E-10	1.10938E-08	#VALUE!	1.16529E-08	0.0116529
3964753767839	396475	3767839	4.62485E-05	4.62485E-05	0	0	0	0	4.62485E-05	4.62485E-05	0	0	6.27225E-10	1.24452E-08	#VALUE!	1.30724E-08	0.0130724
3965253767839	396525	3767839	5.0346E-05	5.0346E-05	0	0	0	0	5.0346E-05	5.0346E-05	0	0	6.82795E-10	1.35478E-08	#VALUE!	1.42306E-08	0.0142306
3965753767839	396575	3767839	5.6608E-05	5.6608E-05	0	0	0	0	5.6608E-05	5.6608E-05	0	0	7.67721E-10	1.52329E-08	#VALUE!	1.60006E-08	0.0160006
3966253767839	396625	3767839	6.39637E-05	6.39637E-05	0	0	0	0	6.39637E-05	6.39637E-05	0	0	8.6748E-10	1.72123E-08	#VALUE!	1.80798E-08	0.0180798
3966753767839	396675	3767839	7.54345E-05	7.54345E-05	0	0	0	0	7.54345E-05	7.54345E-05	0	0	1.02305E-09	2.0299E-08	#VALUE!	2.13221E-08	0.0213221
3967253767839	396725	3767839	8.62098E-05	8.62098E-05	0	0	0	0	8.62098E-05	8.62098E-05	0	0	1.16918E-09	2.31986E-08	#VALUE!	2.43678E-08	0.0243678
3967753767839	396775	3767839	9.71968E-05	9.71968E-05	0	0	0	0	9.71968E-05	9.71968E-05	0	0	1.31819E-09	2.61551E-08	#VALUE!	2.74733E-08	0.0274733
3968253767839	396825	3767839	0.000108637	0.000108637	0	0	0	0	0.000108637	0.000108637	0	0	1.47335E-09	2.92337E-08	#VALUE!	3.0707E-08	0.030707
3968753767839	396875	3767839	0.000119254	0.000119254	0	0	0	0	0.000119254	0.000119254	0	0	1.61733E-09	3.20905E-08	#VALUE!	3.37079E-08	0.0337079
3969253767839	396925	3767839	0.000127091	0.000127091	0	0	0	0	0.000127091	0.000127091	0	0	1.72361E-09	3.41994E-08	#VALUE!	3.59231E-08	0.0359231
3969753767839	396975	3767839	0.000134376	0.000134376	0	0	0	0	0.000134376	0.000134376	0	0	1.82242E-09	3.61598E-08	#VALUE!	3.79823E-08	0.0379823
3970253767839	397025	3767839	0.00013619	0.00013619	0	0	0	0	0.00013619	0.00013619	0	0	1.84702E-09	3.66481E-08	#VALUE!	3.84951E-08	0.0384951
3970753767839	397075	3767839	0.000127204	0.000127204	0	0	0	0	0.000127204	0.000127204	0	0	1.72515E-09	3.423E-08	#VALUE!	3.59551E-08	0.0359551
3971253767839	397125	3767839	0.000117266	0.000117266	0	0	0	0	0.000117266	0.000117266	0	0	1.59036E-09	3.15555E-08	#VALUE!	3.31459E-08	0.0331459
3971753767839	397175	3767839	0.000108844	0.000108844	0	0	0	0	0.000108844	0.000108844	0	0	1.47615E-09	2.92893E-08	#VALUE!	3.07654E-08	0.0307654
3972253767839	397225	3767839	9.9437E-05	9.9437E-05	0	0	0	0	9.9437E-05	9.9437E-05	0	0	1.34857E-09	2.67579E-08	#VALUE!	2.81065E-08	0.0281065
3972753767839	397275	3767839	8.76537E-05	8.76537E-05	0	0	0	0	8.76537E-05	8.76537E-05	0	0	1.18877E-09	2.35871E-08	#VALUE!	2.47759E-08	0.0247759
3973253767839	397325	3767839	7.5243E-05	7.5243E-05	0	0	0	0	7.5243E-05	7.5243E-05	0	0	1.02045E-09	2.02475E-08	#VALUE!	2.12679E-08	0.0212679
3973753767839	397375	3767839	6.26408E-05	6.26408E-05	0	0	0	0	6.26408E-05	6.26408E-05	0	0	8.49538E-10	1.68563E-08	#VALUE!	1.77058E-08	0.0177058
3974753767839	397475	3767839	4.5291E-05	4.5291E-05	0	0	0	0	4.5291E-05	4.5291E-05	0	0	6.14239E-10	1.21875E-08	#VALUE!	1.28018E-08	0.0128018
3975253767839	397525	3767839	3.99336E-05	3.99336E-05	0	0	0	0	3.99336E-05	3.99336E-05	0	0	5.41581E-10	1.07459E-08	#VALUE!	1.12875E-08	0.0112875
3964253767889	396425	3767889	4.52103E-05	4.52103E-05	0	0	0	0	4.52103E-05	4.52103E-05	0	0	6.13145E-10	1.21658E-08	#VALUE!	1.2779E-08	0.012779
3964753767889	396475	3767889	5.00058E-05	5.00058E-05	0	0	0	0	5.00058E-05	5.00058E-05	0	0	6.78181E-10	1.34563E-08	#VALUE!	1.41345E-08	0.0141345
3965253767889	396525	3767889	5.71372E-05	5.71372E-05	0	0	0	0	5.71372E-05	5.71372E-05	0	0	7.74898E-10	1.53753E-08	#VALUE!	1.61502E-08	0.0161502
3965753767889	396575	3767889	6.65139E-05	6.65139E-05	0	0	0	0	6.65139E-05	6.65139E-05	0	0	9.02066E-10	1.78985E-08	#VALUE!	1.88006E-08	0.0188006
3974753767889	397475	3767889	5.33573E-05	5.33573E-05	0	0	0	0	5.33573E-05	5.33573E-05	0	0	7.23635E-10	1.43582E-08	#VALUE!	1.50818E-08	0.0150818
3975253767889	397525	3767889	4.52154E-05	4.52154E-05	0	0	0	0	4.52154E-05	4.52154E-05	0	0	6.13213E-10	1.21672E-08	#VALUE!	1.27804E-08	0.0127804
3964253767939	396425	3767939	4.94514E-05	4.94514E-05	0	0	0	0	4.94514E-05	4.94514E-05	0	0	6.70663E-10	1.33071E-08	#VALUE!	1.39778E-08	0.0139778
3964753767939	396475	3767939	5.56404E-05	5.56404E-05	0	0	0	0	5.56404E-05	5.56404E-05	0	0	7.54598E-10	1.49725E-08	#VALUE!	1.57271E-08	0.0157271
3965253767939	396525	3767939	6.5254E-05	6.5254E-05	0	0	0	0	6.5254E-05	6.5254E-05	0	0	8.84978E-10	1.75595E-08	#VALUE!	1.84445E-08	0.0184445
3974753767939	397475	3767939	6.25425E-05	6.25425E-05	0	0	0	0	6.25425E-05	6.25425E-05	0	0	8.48205E-10	1.68298E-08	#VALUE!	1.7678E-08	0.017678
3975253767939	397525	3767939	5.11927E-05	5.11927E-05	0	0	0	0	5.11927E-05	5.11927E-05	0	0	6.94278E-10	1.37757E-08	#VALUE!	1.44699E-08	0.0144699
3964253767989	396425	3767989	5.27223E-05	5.27223E-05	0	0	0	0	5.27223E-05	5.27223E-05	0	0	7.15023E-10	1.41873E-08	#VALUE!	1.49023E-08	0.0149023
3964753767989	396475	3767989	6.1968E-05	6.1968E-05	0	0	0	0	6.1968E-05	6.1968E-05	0	0	8.40413E-10	1.66752E-08	#VALUE!	1.75156E-08	0.0175156
3974753767989	397475	3767989	7.29801E-05	7.29801E-05	0	0	0	0	7.29801E-05	7.29801E-05	0	0	9.8976E-10	1.96385E-08	#VALUE!	2.06283E-08	0.0206283
3975253767989	397525	3767989	5.78806E-05	5.78806E-05	0	0	0	0	5.78806E-05	5.78806E-05	0	0	7.8498E-10	1.55753E-08	#VALUE!	1.63603E-08	0.0163603
3964253768039	396425	3768039	5.70868E-05	5.70868E-05	0	0	0	0	5.70868E-05	5.70868E-05	0	0	7.74215E-10	1.53617E-08	#VALUE!	1.6136E-08	0.016136
3964753768039	396475	3768039	6.90087E-05	6.90087E-05	0	0	0	0	6.90087E-05	6.90087E-05	0	0	9.359E-10	1.85698E-08	#VALUE!	1.95057E-08	0.0195057
3974753768039	397475	3768039	8.39167E-05	8.39167E-05	0	0	0	0	8.39167E-05	8.39167E-05	0	0	1.13808E-09	2.25815E-08	#VALUE!	2.37196E-08	0.0237196
3975253768039	397525	3768039	6.41981E-05	6.41981E-05	0	0	0	0	6.41981E-05	6.41981E-05	0	0	8.70658E-10	1.72753E-08	#VALUE!	1.8146E-08	0.018146
3964253768089	396425	3768089	6.16101E-05	6.16101E-05	0	0	0	0	6.16101E-05	6.16101E-05	0	0	8.3556E-10	1.65789E-08	#VALUE!	1.74145E-08	0.0174145
3964753768089	396475	3768089	7.64702E-05	7.64702E-05	0	0	0	0	7.64702E-05	7.64702E-05	0	0	1.03709E-09	2.05777E-08	#VALUE!	2.16148E-08	0.0216148
3974753768089	397475	3768089	9.57755E-05	9.57755E-05	0	0	0	0	9.57755E-05	9.57755E-05	0	0	1.29891E-09	2.57727E-08	#VALUE!	2.70716E-08	0.0270716
3975253768089	397525	3768089	7.0503E-05	7.0503E-05	0	0	0	0	7.0503E-05	7.0503E-05	0	0	9.56166E-10	1.8972E-08	#VALUE!	1.99281E-08	0.0199281
3964253768139	396425	3768139	6.76756E-05	6.76756E-05	0	0	0	0	6.76756E-05	6.76756E-05	0	0	9.17821E-10	1.82111E-08	#VALUE!	1.9129E-08	0.019129
3964753768139	396475	3768139	8.29415E-05	8.29415E-05	0	0	0	0	8.29415E-05	8.29415E-05	0	0	1.12486E-09	2.23191E-08	#VALUE!	2.34439E-08	0.0234439
3974253768139	397425	3768139	0.00015251	0.00015251	0	0	0	0	0.00015251	0.00015251	0	0	2.06834E-09	4.10395E-08	#VALUE!	4.31078E-08	0.0431078
3974753768139	397475	3768139	0.000104295	0.000104295	0	0	0	0	0.000104295	0.000104295	0	0	1.41446E-09	2.80653E-08	#VALUE!	2.94798E-08	0.0294798
3975253768139	397525	3768139	7.65509E-05	7.65509E-05	0	0	0	0	7.65509E-05	7.65509E-05	0	0	1.03819E-09	2.05994E-08	#VALUE!	2.16376E-08	0.0216376
3964253768189	396425	3768189	7.03871E-05	7.03871E-05	0	0	0	0	7.03871E-05	7.03871E-05	0	0	9.54594E-10	1.89408E-08	#VALUE!	1.98954E-08	0.0198954
3964753768189	396475	3768189	8.83316E-05	8.83316E-05	0	0	0	0	8.83316E-05	8.83316E-05	0	0	1.19796E-09	2.37695E-08	#VALUE!	2.49675E-08	0.0249675
3973753768189	397375	3768189	0.00025802	0.00025802	0	0	0	0	0.00025802	0.00025802	0	0	3.49928E-09	6.94316E-08	#VALUE!	7.29309E-08	0.0729309

Garvey Reservoir Rehab - Mitigated Reservoir Cover and Liner Work			Demolition - 2025	Demolition - 2026	ite Preparation - 202	te Preparation - 202	Grading - 2025	Grading - 2026	nfrastructure - 2025	nfrastructure - 2026	Paving - 2025	itectural Coating - 2	Child Risk				
Unique Identifier	X (UTM)	Y (UTM)	2025	2026	1900	1900	1900	1900	2026	2027	1900	1900	3rd Trimester	0<2	2<16	Total	per million
3974253768189	397425	3768189	0.000156509	0.000156509	0	0	0	0	0.000156509	0.000156509	0	0	2.12258E-09	4.21156E-08	#VALUE!	4.42382E-08	0.0442382
3974753768189	397475	3768189	0.000111465	0.000111465	0	0	0	0	0.000111465	0.000111465	0	0	1.51169E-09	2.99945E-08	#VALUE!	3.15062E-08	0.0315062
3975253768189	397525	3768189	8.21451E-05	8.21451E-05	0	0	0	0	8.21451E-05	8.21451E-05	0	0	1.11406E-09	2.21048E-08	#VALUE!	2.32189E-08	0.0232189
3964253768239	396425	3768239	7.16269E-05	7.16269E-05	0	0	0	0	7.16269E-05	7.16269E-05	0	0	9.71408E-10	1.92744E-08	#VALUE!	2.02458E-08	0.0202458
3964753768239	396475	3768239	9.16353E-05	9.16353E-05	0	0	0	0	9.16353E-05	9.16353E-05	0	0	1.24276E-09	2.46585E-08	#VALUE!	2.59013E-08	0.0259013
3973753768239	397375	3768239	0.000254063	0.000254063	0	0	0	0	0.000254063	0.000254063	0	0	3.44562E-09	6.8367E-08	#VALUE!	7.18126E-08	0.0718126
3974253768239	397425	3768239	0.000154266	0.000154266	0	0	0	0	0.000154266	0.000154266	0	0	2.09216E-09	4.15121E-08	#VALUE!	4.36043E-08	0.0436043
3974753768239	397475	3768239	0.000109078	0.000109078	0	0	0	0	0.000109078	0.000109078	0	0	1.47933E-09	2.93524E-08	#VALUE!	3.08317E-08	0.0308317
3975253768239	397525	3768239	8.2251E-05	8.2251E-05	0	0	0	0	8.2251E-05	8.2251E-05	0	0	1.11549E-09	2.21333E-08	#VALUE!	2.32488E-08	0.0232488
3964253768289	396425	3768289	7.06668E-05	7.06668E-05	0	0	0	0	7.06668E-05	7.06668E-05	0	0	9.58387E-10	1.9016E-08	#VALUE!	1.99744E-08	0.0199744
3964753768289	396475	3768289	9.21342E-05	9.21342E-05	0	0	0	0	9.21342E-05	9.21342E-05	0	0	1.24953E-09	2.47928E-08	#VALUE!	2.60423E-08	0.0260423
3973253768289	397325	3768289	0.00034395	0.00034395	0	0	0	0	0.00034395	0.00034395	0	0	4.66467E-09	9.25549E-08	#VALUE!	9.72196E-08	0.0972196
3973753768289	397375	3768289	0.000230071	0.000230071	0	0	0	0	0.000230071	0.000230071	0	0	3.12023E-09	6.19108E-08	#VALUE!	6.5031E-08	0.065031
3974253768289	397425	3768289	0.000162546	0.000162546	0	0	0	0	0.000162546	0.000162546	0	0	2.20446E-09	4.37404E-08	#VALUE!	4.59448E-08	0.0459448
3974753768289	397475	3768289	0.000117855	0.000117855	0	0	0	0	0.000117855	0.000117855	0	0	1.59836E-09	3.17142E-08	#VALUE!	3.33126E-08	0.0333126
3975253768289	397525	3768289	8.80746E-05	8.80746E-05	0	0	0	0	8.80746E-05	8.80746E-05	0	0	1.19447E-09	2.37004E-08	#VALUE!	2.48948E-08	0.0248948
3964253768339	396425	3768339	6.93086E-05	6.93086E-05	0	0	0	0	6.93086E-05	6.93086E-05	0	0	9.39967E-10	1.86505E-08	#VALUE!	1.95905E-08	0.0195905
3964753768339	396475	3768339	8.97352E-05	8.97352E-05	0	0	0	0	8.97352E-05	8.97352E-05	0	0	1.21699E-09	2.41472E-08	#VALUE!	2.53642E-08	0.0253642
3965253768339	396525	3768339	0.000126673	0.000126673	0	0	0	0	0.000126673	0.000126673	0	0	1.71794E-09	3.40869E-08	#VALUE!	3.58048E-08	0.0358048
3972753768339	397275	3768339	0.000374993	0.000374993	0	0	0	0	0.000374993	0.000374993	0	0	5.08568E-09	1.00908E-07	#VALUE!	1.05994E-07	0.1059942
3973253768339	397325	3768339	0.000278477	0.000278477	0	0	0	0	0.000278477	0.000278477	0	0	3.77671E-09	7.49365E-08	#VALUE!	7.87132E-08	0.0787132
3973753768339	397375	3768339	0.000202921	0.000202921	0	0	0	0	0.000202921	0.000202921	0	0	2.75203E-09	5.46049E-08	#VALUE!	5.73569E-08	0.0573569
3974253768339	397425	3768339	0.000152127	0.000152127	0	0	0	0	0.000152127	0.000152127	0	0	2.06315E-09	4.09364E-08	#VALUE!	4.29995E-08	0.0429995
3974753768339	397475	3768339	0.000115779	0.000115779	0	0	0	0	0.000115779	0.000115779	0	0	1.5702E-09	3.11554E-08	#VALUE!	3.27256E-08	0.0327256
3975253768339	397525	3768339	9.00427E-05	9.00427E-05	0	0	0	0	9.00427E-05	9.00427E-05	0	0	1.22116E-09	2.423E-08	#VALUE!	2.54511E-08	0.0254511
3964253768389	396425	3768389	6.57101E-05	6.57101E-05	0	0	0	0	6.57101E-05	6.57101E-05	0	0	8.91164E-10	1.76822E-08	#VALUE!	1.85734E-08	0.0185734
3964753768389	396475	3768389	8.45971E-05	8.45971E-05	0	0	0	0	8.45971E-05	8.45971E-05	0	0	1.14731E-09	2.27646E-08	#VALUE!	2.39119E-08	0.0239119
3965253768389	396525	3768389	0.00011691	0.00011691	0	0	0	0	0.00011691	0.00011691	0	0	1.58554E-09	3.14599E-08	#VALUE!	3.30455E-08	0.0330455
3972253768389	397225	3768389	0.00034837	0.00034837	0	0	0	0	0.00034837	0.00034837	0	0	4.72461E-09	9.37443E-08	#VALUE!	9.84689E-08	0.0984689
3972753768389	397275	3768389	0.000286694	0.000286694	0	0	0	0	0.000286694	0.000286694	0	0	3.88816E-09	7.71478E-08	#VALUE!	8.10359E-08	0.0810359
3973253768389	397325	3768389	0.000229209	0.000229209	0	0	0	0	0.000229209	0.000229209	0	0	3.10855E-09	6.16789E-08	#VALUE!	6.47874E-08	0.0647874
3973753768389	397375	3768389	0.000177719	0.000177719	0	0	0	0	0.000177719	0.000177719	0	0	2.41024E-09	4.78232E-08	#VALUE!	5.02334E-08	0.0502334
3974253768389	397425	3768389	0.000138274	0.000138274	0	0	0	0	0.000138274	0.000138274	0	0	1.87529E-09	3.72089E-08	#VALUE!	3.90841E-08	0.0390841
3974753768389	397475	3768389	0.000108945	0.000108945	0	0	0	0	0.000108945	0.000108945	0	0	1.47751E-09	2.93164E-08	#VALUE!	3.07939E-08	0.0307939
3975253768389	397525	3768389	8.67188E-05	8.67188E-05	0	0	0	0	8.67188E-05	8.67188E-05	0	0	1.17609E-09	2.33356E-08	#VALUE!	2.45116E-08	0.0245116
3964253768439	396425	3768439	6.26105E-05	6.26105E-05	0	0	0	0	6.26105E-05	6.26105E-05	0	0	8.49128E-10	1.68481E-08	#VALUE!	1.76973E-08	0.0176973
3964753768439	396475	3768439	7.81132E-05	7.81132E-05	0	0	0	0	7.81132E-05	7.81132E-05	0	0	1.05938E-09	2.10198E-08	#VALUE!	2.20792E-08	0.0220792
3965253768439	396525	3768439	0.000104401	0.000104401	0	0	0	0	0.000104401	0.000104401	0	0	1.4159E-09	2.80938E-08	#VALUE!	2.95097E-08	0.0295097
3971753768439	397175	3768439	0.00028558	0.00028558	0	0	0	0	0.00028558	0.00028558	0	0	3.87306E-09	7.6848E-08	#VALUE!	8.07211E-08	0.0807211
3972253768439	397225	3768439	0.000266736	0.000266736	0	0	0	0	0.000266736	0.000266736	0	0	3.61749E-09	7.17772E-08	#VALUE!	7.53947E-08	0.0753947
3972753768439	397275	3768439	0.000227876	0.000227876	0	0	0	0	0.000227876	0.000227876	0	0	3.09047E-09	6.13202E-08	#VALUE!	6.44106E-08	0.0644106
3973253768439	397325	3768439	0.000194351	0.000194351	0	0	0	0	0.000194351	0.000194351	0	0	2.6358E-09	5.22987E-08	#VALUE!	5.49345E-08	0.0549345
3973753768439	397375	3768439	0.000160488	0.000160488	0	0	0	0	0.000160488	0.000160488	0	0	2.17654E-09	4.31863E-08	#VALUE!	4.53629E-08	0.0453629
3974253768439	397425	3768439	0.000130543	0.000130543	0	0	0	0	0.000130543	0.000130543	0	0	1.77043E-09	3.51284E-08	#VALUE!	3.68989E-08	0.0368989
3974753768439	397475	3768439	0.000102577	0.000102577	0	0	0	0	0.000102577	0.000102577	0	0	1.39115E-09	2.76029E-08	#VALUE!	2.8994E-08	0.028994
3975253768439	397525	3768439	8.32161E-05	8.32161E-05	0	0	0	0	8.32161E-05	8.32161E-05	0	0	1.12858E-09	2.2393E-08	#VALUE!	2.35216E-08	0.0235216
3964253768489	396425	3768489	5.73892E-05	5.73892E-05	0	0	0	0	5.73892E-05	5.73892E-05	0	0	7.78316E-10	1.54431E-08	#VALUE!	1.62214E-08	0.0162214
3964753768489	396475	3768489	7.05962E-05	7.05962E-05	0	0	0	0	7.05962E-05	7.05962E-05	0	0	9.5743E-10	1.89971E-08	#VALUE!	1.99545E-08	0.0199545
3965253768489	396525	3768489	9.19225E-05	9.19225E-05	0	0	0	0	9.19225E-05	9.19225E-05	0	0	1.24666E-09	2.47358E-08	#VALUE!	2.59825E-08	0.0259825
3970753768489	397075	3768489	0.00027423	0.00027423	0	0	0	0	0.00027423	0.00027423	0	0	3.71913E-09	7.37939E-08	#VALUE!	7.7513E-08	0.077513
3971253768489	397125	3768489	0.000244271	0.000244271	0	0	0	0	0.000244271	0.000244271	0	0	3.31281E-09	6.57319E-08	#VALUE!	6.90447E-08	0.0690447
3971753768489	397175	3768489	0.00022144	0.00022144	0	0	0	0	0.00022144	0.00022144	0	0	3.00318E-09	5.95883E-08	#VALUE!	6.25915E-08	0.0625915
3972253768489	397225	3768489	0.000204347	0.000204347	0	0	0	0	0.000204347	0.000204347	0	0	2.77137E-09	5.49887E-08	#VALUE!	5.77601E-08	0.0577601
3972753768489	397275	3768489	0.000187557	0.000187557	0	0	0	0	0.000187557	0.000187557	0	0	2.54366E-09	5.04705E-08	#VALUE!	5.30142E-08	0.0530142
3973253768489	397325	3768489	0.000165512	0.000165512	0	0	0	0	0.000165512	0.000165512	0	0	2.24469E-09	4.45385E-08	#VALUE!	4.67832E-08	0.0467832
3973753768489	397375	3768489	0.000139988	0.000139988	0	0	0	0	0.000139988	0.000139988	0	0	1.89852E-09	3.767E-08	#VALUE!	3.95685E-08	0.0395685
3974253768489	397425	3768489	0.000117424	0.000117424	0	0	0	0	0.000117424	0.000117424	0	0	1.59252E-09	3.15982E-08	#VALUE!	3.31908E-08	0.0331908
3974753768489	397475	3768489	9.82274E-05	9.82274E-05	0	0	0	0	9.82274E-05	9.82274E-05	0	0	1.33217E-09	2.64325E-08	#VALUE!	2.77646E-08	0.0277646
3975253768489	397525	3768489	8.18024E-05	8.18024E-05	0	0	0	0	8.18024E-05	8.18024E-05	0	0	1.10941E-09	2.20126E-08	#VALUE!	2.3122E-08	0.023122
3964253768539	396425	3768539	5.22813E-05	5.22813E-05	0	0	0	0	5.22813E-05	5.22813E-05	0	0	7.09042E-10	1.40686E-08	#VALUE!	1.47776E-08	0.0147776
3964753768539	396475	3768539	6.36286E-05	6.36286E-05	0	0	0	0	6.36286E-05	6.36286E-05	0	0	8.62935E-10	1.71221E-08	#VALUE!	1.7985E-08	0.017985
3965253768539	396525	3768539	8.00813E-05	8.00813E-05	0	0	0	0	8.00813E-05	8.00813E-05	0	0	1.08607E-09	2.15494E-08	#VALUE!	2.26355E-08	0.0226355
3965753768539	396575	3768539	0.000107352	0.000107352	0	0	0	0	0.000107352	0.000107352	0	0	1.45592E-09	2.88879E-08	#VALUE!	3.03438E-08	0.0303438
3970253768539	397025	3768539	0.000235098	0.000235098	0	0	0	0	0.000235098	0.000235098	0	0	3.18842E-09	6.32636E-08	#VALUE!	6.6452E-08	0.066452
3970753768539	397075	3768539	0.000214535	0.000214535	0	0	0	0	0.000214535	0.000214535	0	0	2.90954E-09	5.77303E-08	#VALUE!	6.06398E-08	0.0606398
3971253768539	397125	3768539	0.000195701	0.000195701	0	0	0	0	0.000195701	0.000195701	0	0	2.65411E-09	5.26622E-08	#VALUE!	5.53163E-08	0.0553163
3971753768539	397175	3768539	0.000180899	0.000180899	0	0	0	0	0.000180899	0.000180899	0	0	2.45337E-09	4.8679E-08	#VALUE!	5.11323E-08	0.0511323
3972253768539	397225	3768539	0.00016652	0.00016652	0	0	0	0	0.00016652	0.00016652	0	0	2.25836E-09	4.48097E-08	#VALUE!	4.70681E-08	0.0470681
3972753768539	397275	3768539	0.000157759	0.000157759	0	0	0	0	0.000157759	0.000157759	0	0	2.13953E-09	4.2452E-08	#VALUE!	4.45915E-08	0.0445915
3973253768539	397325	3768539	0.000141014	0.000141014	0	0	0	0	0.000141014	0.000141014	0	0	1.91243E-09	3.7946E-08	#VALUE!	3.98584E-08	0.0398584
3973753768539	397375	3768539	0.000122139	0.000122139	0	0	0	0	0.000122139	0.000122139	0	0	1.65646E-09	3.2867E-08	#VALUE!	3.45234E-08	0.0345234

Garvey Reservoir Rehab - Mitigated Reservoir Cover and Liner Work			Demolition - 2025	Demolition - 2026	ite Preparation - 202	te Preparation - 202	Grading - 2025	Grading - 2026	nfrastructure - 2025	nfrastructure - 2026	Paving - 2025	itectural Coating - 2	Child Risk				
Unique Identifier	X (UTM)	Y (UTM)	2025	2026	1900	1900	1900	1900	2026	2027	1900	1900	3rd Trimester	0<2	2<16	Total	per million
3974253768539	397425	3768539	0.000105442	0.000105442	0	0	0	0	0.000105442	0.000105442	0	0	1.43001E-09	2.83739E-08	#VALUE!	2.98039E-08	0.0298039
3974753768539	397475	3768539	9.00527E-05	9.00527E-05	0	0	0	0	9.00527E-05	9.00527E-05	0	0	1.2213E-09	2.42327E-08	#VALUE!	2.5454E-08	0.025454
3975253768539	397525	3768539	7.66693E-05	7.66693E-05	0	0	0	0	7.66693E-05	7.66693E-05	0	0	1.03979E-09	2.06313E-08	#VALUE!	2.16711E-08	0.0216711
3964253768589	396425	3768589	4.7821E-05	4.7821E-05	0	0	0	0	4.7821E-05	4.7821E-05	0	0	6.48551E-10	1.28684E-08	#VALUE!	1.35169E-08	0.0135169
3964753768589	396475	3768589	5.69533E-05	5.69533E-05	0	0	0	0	5.69533E-05	5.69533E-05	0	0	7.72403E-10	1.53258E-08	#VALUE!	1.60982E-08	0.0160982
3965253768589	396525	3768589	7.08634E-05	7.08634E-05	0	0	0	0	7.08634E-05	7.08634E-05	0	0	9.61053E-10	1.90689E-08	#VALUE!	2.003E-08	0.02003
3965753768589	396575	3768589	8.95538E-05	8.95538E-05	0	0	0	0	8.95538E-05	8.95538E-05	0	0	1.21453E-09	2.40984E-08	#VALUE!	2.5313E-08	0.025313
3966253768589	396625	3768589	0.000114201	0.000114201	0	0	0	0	0.000114201	0.000114201	0	0	1.54881E-09	3.07309E-08	#VALUE!	3.22798E-08	0.0322798
3968253768589	396825	3768589	0.000215687	0.000215687	0	0	0	0	0.000215687	0.000215687	0	0	2.92516E-09	5.80402E-08	#VALUE!	6.09653E-08	0.0609653
3968753768589	396875	3768589	0.00022045	0.00022045	0	0	0	0	0.00022045	0.00022045	0	0	2.98975E-09	5.93218E-08	#VALUE!	6.23116E-08	0.0623116
3969253768589	396925	3768589	0.000210264	0.000210264	0	0	0	0	0.000210264	0.000210264	0	0	2.85161E-09	5.65809E-08	#VALUE!	5.94325E-08	0.0594325
3969753768589	396975	3768589	0.000202263	0.000202263	0	0	0	0	0.000202263	0.000202263	0	0	2.74311E-09	5.44279E-08	#VALUE!	5.7171E-08	0.057171
3970253768589	397025	3768589	0.000189497	0.000189497	0	0	0	0	0.000189497	0.000189497	0	0	2.56997E-09	5.09927E-08	#VALUE!	5.35626E-08	0.0535626
3970753768589	397075	3768589	0.000174113	0.000174113	0	0	0	0	0.000174113	0.000174113	0	0	2.36133E-09	4.68528E-08	#VALUE!	4.92142E-08	0.0492142
3971253768589	397125	3768589	0.000163459	0.000163459	0	0	0	0	0.000163459	0.000163459	0	0	2.21684E-09	4.39858E-08	#VALUE!	4.62027E-08	0.0462027
3971753768589	397175	3768589	0.000152237	0.000152237	0	0	0	0	0.000152237	0.000152237	0	0	2.06465E-09	4.09662E-08	#VALUE!	4.30309E-08	0.0430309
3972253768589	397225	3768589	0.000140129	0.000140129	0	0	0	0	0.000140129	0.000140129	0	0	1.90044E-09	3.77079E-08	#VALUE!	3.96084E-08	0.0396084
3972753768589	397275	3768589	0.000128346	0.000128346	0	0	0	0	0.000128346	0.000128346	0	0	1.74063E-09	3.45371E-08	#VALUE!	3.62778E-08	0.0362778
3973253768589	397325	3768589	0.000120662	0.000120662	0	0	0	0	0.000120662	0.000120662	0	0	1.63643E-09	3.24696E-08	#VALUE!	3.4106E-08	0.034106
3973753768589	397375	3768589	0.00010672	0.00010672	0	0	0	0	0.00010672	0.00010672	0	0	1.44734E-09	2.87177E-08	#VALUE!	3.0165E-08	0.030165
3974253768589	397425	3768589	9.46617E-05	9.46617E-05	0	0	0	0	9.46617E-05	9.46617E-05	0	0	1.28381E-09	2.54729E-08	#VALUE!	2.67567E-08	0.0267567
3974753768589	397475	3768589	8.23493E-05	8.23493E-05	0	0	0	0	8.23493E-05	8.23493E-05	0	0	1.11683E-09	2.21597E-08	#VALUE!	2.32766E-08	0.0232766
3975253768589	397525	3768589	7.13522E-05	7.13522E-05	0	0	0	0	7.13522E-05	7.13522E-05	0	0	9.67683E-10	1.92005E-08	#VALUE!	2.01682E-08	0.0201682
3964253768639	396425	3768639	4.3527E-05	4.3527E-05	0	0	0	0	4.3527E-05	4.3527E-05	0	0	5.90316E-10	1.17129E-08	#VALUE!	1.23032E-08	0.0123032
3964753768639	396475	3768639	5.0666E-05	5.0666E-05	0	0	0	0	5.0666E-05	5.0666E-05	0	0	6.87135E-10	1.36339E-08	#VALUE!	1.43211E-08	0.0143211
3965253768639	396525	3768639	6.19402E-05	6.19402E-05	0	0	0	0	6.19402E-05	6.19402E-05	0	0	8.40037E-10	1.66678E-08	#VALUE!	1.75078E-08	0.0175078
3965753768639	396575	3768639	7.5243E-05	7.5243E-05	0	0	0	0	7.5243E-05	7.5243E-05	0	0	1.02045E-09	2.02475E-08	#VALUE!	2.12679E-08	0.0212679
3966253768639	396625	3768639	9.17436E-05	9.17436E-05	0	0	0	0	9.17436E-05	9.17436E-05	0	0	1.24423E-09	2.46877E-08	#VALUE!	2.59319E-08	0.0259319
3966753768639	396675	3768639	0.000111228	0.000111228	0	0	0	0	0.000111228	0.000111228	0	0	1.50848E-09	2.99308E-08	#VALUE!	3.14393E-08	0.0314393
3967253768639	396725	3768639	0.000131571	0.000131571	0	0	0	0	0.000131571	0.000131571	0	0	1.78438E-09	3.54051E-08	#VALUE!	3.71895E-08	0.0371895
3967753768639	396775	3768639	0.000148321	0.000148321	0	0	0	0	0.000148321	0.000148321	0	0	2.01154E-09	3.99125E-08	#VALUE!	4.1924E-08	0.041924
3968253768639	396825	3768639	0.00016084	0.00016084	0	0	0	0	0.00016084	0.00016084	0	0	2.18133E-09	4.32813E-08	#VALUE!	4.54626E-08	0.0454626
3968753768639	396875	3768639	0.000164991	0.000164991	0	0	0	0	0.000164991	0.000164991	0	0	2.23762E-09	4.43981E-08	#VALUE!	4.66357E-08	0.0466357
3969253768639	396925	3768639	0.000163292	0.000163292	0	0	0	0	0.000163292	0.000163292	0	0	2.21458E-09	4.39411E-08	#VALUE!	4.61556E-08	0.0461556
3969753768639	396975	3768639	0.000159815	0.000159815	0	0	0	0	0.000159815	0.000159815	0	0	2.16742E-09	4.30053E-08	#VALUE!	4.51727E-08	0.0451727
3970253768639	397025	3768639	0.000152618	0.000152618	0	0	0	0	0.000152618	0.000152618	0	0	2.06981E-09	4.10686E-08	#VALUE!	4.31384E-08	0.0431384
3970753768639	397075	3768639	0.000142762	0.000142762	0	0	0	0	0.000142762	0.000142762	0	0	1.93615E-09	3.84166E-08	#VALUE!	4.03527E-08	0.0403527
3971253768639	397125	3768639	0.000131793	0.000131793	0	0	0	0	0.000131793	0.000131793	0	0	1.78739E-09	3.54648E-08	#VALUE!	3.72522E-08	0.0372522
3971753768639	397175	3768639	0.000127242	0.000127242	0	0	0	0	0.000127242	0.000127242	0	0	1.72566E-09	3.42401E-08	#VALUE!	3.59658E-08	0.0359658
3972253768639	397225	3768639	0.000119365	0.000119365	0	0	0	0	0.000119365	0.000119365	0	0	1.61883E-09	3.21204E-08	#VALUE!	3.37392E-08	0.0337392
3972753768639	397275	3768639	0.000111553	0.000111553	0	0	0	0	0.000111553	0.000111553	0	0	1.51289E-09	3.00183E-08	#VALUE!	3.15311E-08	0.0315311
3973253768639	397325	3768639	0.00010388	0.00010388	0	0	0	0	0.00010388	0.00010388	0	0	1.40882E-09	2.79534E-08	#VALUE!	2.93623E-08	0.0293623
3973753768639	397375	3768639	9.35025E-05	9.35025E-05	0	0	0	0	9.35025E-05	9.35025E-05	0	0	1.26809E-09	2.5161E-08	#VALUE!	2.64291E-08	0.0264291
3974253768639	397425	3768639	8.40049E-05	8.40049E-05	0	0	0	0	8.40049E-05	8.40049E-05	0	0	1.13928E-09	2.26052E-08	#VALUE!	2.37445E-08	0.0237445
3974753768639	397475	3768639	7.51951E-05	7.51951E-05	0	0	0	0	7.51951E-05	7.51951E-05	0	0	1.0198E-09	2.02346E-08	#VALUE!	2.12544E-08	0.0212544
3975253768639	397525	3768639	6.61586E-05	6.61586E-05	0	0	0	0	6.61586E-05	6.61586E-05	0	0	8.97247E-10	1.78029E-08	#VALUE!	1.87002E-08	0.0187002
3964253768689	396425	3768689	3.95102E-05	3.95102E-05	0	0	0	0	3.95102E-05	3.95102E-05	0	0	5.3584E-10	1.0632E-08	#VALUE!	1.11678E-08	0.0111678
3964753768689	396475	3768689	4.51448E-05	4.51448E-05	0	0	0	0	4.51448E-05	4.51448E-05	0	0	6.12256E-10	1.21482E-08	#VALUE!	1.27605E-08	0.0127605
3965253768689	396525	3768689	5.29516E-05	5.29516E-05	0	0	0	0	5.29516E-05	5.29516E-05	0	0	7.18132E-10	1.4249E-08	#VALUE!	1.49671E-08	0.0149671
3965753768689	396575	3768689	6.31145E-05	6.31145E-05	0	0	0	0	6.31145E-05	6.31145E-05	0	0	8.55963E-10	1.69838E-08	#VALUE!	1.78397E-08	0.0178397
3966253768689	396625	3768689	7.42678E-05	7.42678E-05	0	0	0	0	7.42678E-05	7.42678E-05	0	0	1.00722E-09	1.9985E-08	#VALUE!	2.09923E-08	0.0209923
3966753768689	396675	3768689	8.74597E-05	8.74597E-05	0	0	0	0	8.74597E-05	8.74597E-05	0	0	1.18613E-09	2.35349E-08	#VALUE!	2.47211E-08	0.0247211
3967253768689	396725	3768689	9.99864E-05	9.99864E-05	0	0	0	0	9.99864E-05	9.99864E-05	0	0	1.35602E-09	2.69058E-08	#VALUE!	2.82618E-08	0.0282618
3967753768689	396775	3768689	0.000111712	0.000111712	0	0	0	0	0.000111712	0.000111712	0	0	1.51504E-09	3.0061E-08	#VALUE!	3.1576E-08	0.031576
3968253768689	396825	3768689	0.000120738	0.000120738	0	0	0	0	0.000120738	0.000120738	0	0	1.63746E-09	3.24899E-08	#VALUE!	3.41274E-08	0.0341274
3968753768689	396875	3768689	0.000126705	0.000126705	0	0	0	0	0.000126705	0.000126705	0	0	1.71838E-09	3.40957E-08	#VALUE!	3.58141E-08	0.0358141
3969253768689	396925	3768689	0.000128137	0.000128137	0	0	0	0	0.000128137	0.000128137	0	0	1.7378E-09	3.44809E-08	#VALUE!	3.62187E-08	0.0362187
3969753768689	396975	3768689	0.000126804	0.000126804	0	0	0	0	0.000126804	0.000126804	0	0	1.71972E-09	3.41221E-08	#VALUE!	3.58419E-08	0.0358419
3970253768689	397025	3768689	0.000123732	0.000123732	0	0	0	0	0.000123732	0.000123732	0	0	1.67806E-09	3.32955E-08	#VALUE!	3.49736E-08	0.0349736
3970753768689	397075	3768689	0.000119755	0.000119755	0	0	0	0	0.000119755	0.000119755	0	0	1.62413E-09	3.22255E-08	#VALUE!	3.38496E-08	0.0338496
3971253768689	397125	3768689	0.000111283	0.000111283	0	0	0	0	0.000111283	0.000111283	0	0	1.50923E-09	2.99457E-08	#VALUE!	3.14549E-08	0.0314549
3971753768689	397175	3768689	0.000107866	0.000107866	0	0	0	0	0.000107866	0.000107866	0	0	1.46289E-09	2.90262E-08	#VALUE!	3.04891E-08	0.0304891
3972253768689	397225	3768689	0.000103212	0.000103212	0	0	0	0	0.000103212	0.000103212	0	0	1.39977E-09	2.77737E-08	#VALUE!	2.91735E-08	0.0291735
3972753768689	397275	3768689	9.68767E-05	9.68767E-05	0	0	0	0	9.68767E-05	9.68767E-05	0	0	1.31385E-09	2.6069E-08	#VALUE!	2.73828E-08	0.0273828
3973253768689	397325	3768689	9.03803E-05	9.03803E-05	0	0	0	0	9.03803E-05	9.03803E-05	0	0	1.22574E-09	2.43208E-08	#VALUE!	2.55466E-08	0.0255466
3973753768689	397375	3768689	8.32413E-05	8.32413E-05	0	0	0	0	8.32413E-05	8.32413E-05	0	0	1.12892E-09	2.23998E-08	#VALUE!	2.35287E-08	0.0235287
3974253768689	397425	3768689	7.54749E-05	7.54749E-05	0	0	0	0	7.54749E-05	7.54749E-05	0	0	1.02359E-09	2.03099E-08	#VALUE!	2.13335E-08	0.0213335
3974753768689	397475	3768689	6.79327E-05	6.79327E-05	0	0	0	0	6.79327E-05	6.79327E-05	0	0	9.21307E-10	1.82803E-08	#VALUE!	1.92016E-08	0.0192016
3975253768689	397525	3768689	6.07659E-05	6.07659E-05	0	0	0	0	6.07659E-05	6.07659E-05	0	0	8.24111E-10	1.63518E-08	#VALUE!	1.71759E-08	0.0171759

Garvey Reservoir Rehab - Mitigated Reservoir Cover and Liner Work

Offroad DPM Emissions, Ground Level Concentrations and Health Risk Calculations

Residential Receptors

Phase	Year	Emissions (lbs/day)	Meters	lbs/meter	meters (h1)	lbs/day (H1)	g/s (H1)	meters (h2)	lbs/day (H2)	g/s (H2)	hrs/day
Demolition - 2025	2025	0.0100	1932.1	5.17572E-06	691.2	0.003577455	4.50749E-05	1240.9	0.006422545	8.09223E-05	10.00
Demolition - 2026	2026	0.0100	1932.1	5.17572E-06	691.2	0.003577455	4.50749E-05	1240.9	0.006422545	8.09223E-05	10.00
Site Preparation - 2025	1900	0.0000	1932.1	0	691.2	0	0	1240.9	0	0	10.00
Site Preparation - 2026	1900	0.0000	1932.1	0	691.2	0	0	1240.9	0	0	10.00
Grading - 2025	1900	0.0000	1932.1	0	691.2	0	0	1240.9	0	0	10.00
Grading - 2026	1900	0.0000	1932.1	0	691.2	0	0	1240.9	0	0	10.00
Infrastructure - 2025	2026	0.0400	1932.1	2.07029E-05	691.2	0.014309818	0.0001803	1240.9	0.025690182	0.000323689	10.00
Infrastructure - 2026	2027	0.0400	1932.1	2.07029E-05	691.2	0.014309818	0.0001803	1240.9	0.025690182	0.000323689	10.00
Paving - 2025	1900	0.0000	1932.1	0	691.2	0	0	1240.9	0	0	10.00
Architectural Coating - 2026	1900	0.0000	1932.1	0	691.2	0	0	1240.9	0	0	10.00

		AERMOD Column Identifier:	*5*	*5*	*5*	*5*	*5*	*5*	*5*	*5*	*5*	*5*				
			6	*6*	*6*	*6*	*6*	*6*	*6*	*6*	*6*	*6*			*MAX:*	1.04807
Garvey Reservoir Rehab - Mitigated Reservoir Cover and Liner Work			Demolition - 2025	Demolition - 2026	Site Preparation - 2025	te Preparation - 202	Grading - 2025	Grading - 2026	Infrastructure - 2025	nfrastructure - 2026	Paving - 2025	rchitectural Coating - 202	Child Risk			
Unique Identifier	X (UTM)	Y (UTM)	2025	2026	1900	1900	1900	1900	2026	2027	1900	1900	3rd Trimester	0<2	Total	per million
396166.283767377.2	396166.28	3767377	3.83011E-06	3.83011E-06	0	0	0	0	1.53205E-05	1.53205E-05	0	0	5.19442E-11	3.86929E-09	3.92123E-09	0.0039212
396266.283767377.2	396266.28	3767377	3.91694E-06	3.91694E-06	0	0	0	0	1.56678E-05	1.56678E-05	0	0	5.31218E-11	3.95701E-09	4.01013E-09	0.0040101
396366.283767377.2	396366.28	3767377	4.07625E-06	4.07625E-06	0	0	0	0	1.6305E-05	1.6305E-05	0	0	5.52823E-11	4.11795E-09	4.17323E-09	0.0041732
396466.283767377.2	396466.28	3767377	4.18245E-06	4.18245E-06	0	0	0	0	1.67298E-05	1.67298E-05	0	0	5.67227E-11	4.22524E-09	4.28196E-09	0.004282
396566.283767377.2	396566.28	3767377	4.58512E-06	4.58512E-06	0	0	0	0	1.83405E-05	1.83405E-05	0	0	6.21836E-11	4.63202E-09	4.6942E-09	0.0046942
396666.283767377.2	396666.28	3767377	4.33497E-06	4.33497E-06	0	0	0	0	1.73399E-05	1.73399E-05	0	0	5.87912E-11	4.37932E-09	4.43811E-09	0.0044381
396766.283767377.2	396766.28	3767377	4.31797E-06	4.31797E-06	0	0	0	0	1.72719E-05	1.72719E-05	0	0	5.85606E-11	4.36214E-09	4.4207E-09	0.0044207
396866.283767377.2	396866.28	3767377	4.32176E-06	4.32176E-06	0	0	0	0	1.7287E-05	1.7287E-05	0	0	5.86119E-11	4.36596E-09	4.42457E-09	0.0044246
396966.283767377.2	396966.28	3767377	4.37894E-06	4.37894E-06	0	0	0	0	1.75158E-05	1.75158E-05	0	0	5.93874E-11	4.42373E-09	4.48312E-09	0.0044831
397066.283767377.2	397066.28	3767377	4.26851E-06	4.26851E-06	0	0	0	0	1.7074E-05	1.7074E-05	0	0	5.78898E-11	4.31217E-09	4.37006E-09	0.0043701
397166.283767377.2	397166.28	3767377	4.21012E-06	4.21012E-06	0	0	0	0	1.68405E-05	1.68405E-05	0	0	5.70979E-11	4.25319E-09	4.31028E-09	0.0043103
397266.283767377.2	397266.28	3767377	4.2152E-06	4.2152E-06	0	0	0	0	1.68608E-05	1.68608E-05	0	0	5.71668E-11	4.25832E-09	4.31548E-09	0.0043155
397366.283767377.2	397366.28	3767377	4.02305E-06	4.02305E-06	0	0	0	0	1.60922E-05	1.60922E-05	0	0	5.45609E-11	4.0642E-09	4.11877E-09	0.0041188
397466.283767377.2	397466.28	3767377	3.62179E-06	3.62179E-06	0	0	0	0	1.44872E-05	1.44872E-05	0	0	4.91189E-11	3.65884E-09	3.70795E-09	0.003708
397566.283767377.2	397566.28	3767377	3.56251E-06	3.56251E-06	0	0	0	0	1.425E-05	1.425E-05	0	0	4.83149E-11	3.59895E-09	3.64726E-09	0.0036473
397666.283767377.2	397666.28	3767377	3.45794E-06	3.45794E-06	0	0	0	0	1.38317E-05	1.38317E-05	0	0	4.68967E-11	3.49331E-09	3.5402E-09	0.0035402
397766.283767377.2	397766.28	3767377	3.56871E-06	3.56871E-06	0	0	0	0	1.42749E-05	1.42749E-05	0	0	4.83991E-11	3.60522E-09	3.65362E-09	0.0036536
397866.283767377.2	397866.28	3767377	3.39922E-06	3.39922E-06	0	0	0	0	1.35969E-05	1.35969E-05	0	0	4.61004E-11	3.43399E-09	3.48009E-09	0.0034801
396166.283767477.2	396166.28	3767477	4.40759E-06	4.40759E-06	0	0	0	0	1.76304E-05	1.76304E-05	0	0	5.9776E-11	4.45268E-09	4.51245E-09	0.0045125
396266.283767477.2	396266.28	3767477	4.30668E-06	4.30668E-06	0	0	0	0	1.72267E-05	1.72267E-05	0	0	5.84075E-11	4.35074E-09	4.40914E-09	0.0044091
396366.283767477.2	396366.28	3767477	4.53722E-06	4.53722E-06	0	0	0	0	1.81489E-05	1.81489E-05	0	0	6.1534E-11	4.58363E-09	4.64516E-09	0.0046452
396466.283767477.2	396466.28	3767477	4.96939E-06	4.96939E-06	0	0	0	0	1.98776E-05	1.98776E-05	0	0	6.73951E-11	5.02022E-09	5.08762E-09	0.0050876
396566.283767477.2	396566.28	3767477	5.03692E-06	5.03692E-06	0	0	0	0	2.01477E-05	2.01477E-05	0	0	6.83109E-11	5.08844E-09	5.15675E-09	0.0051567
396666.283767477.2	396666.28	3767477	4.89066E-06	4.89066E-06	0	0	0	0	1.95626E-05	1.95626E-05	0	0	6.63274E-11	4.94069E-09	5.00701E-09	0.005007
396766.283767477.2	396766.28	3767477	4.92892E-06	4.92892E-06	0	0	0	0	1.97157E-05	1.97157E-05	0	0	6.68462E-11	4.97933E-09	5.04618E-09	0.0050462
396866.283767477.2	396866.28	3767477	4.9577E-06	4.9577E-06	0	0	0	0	1.98308E-05	1.98308E-05	0	0	6.72366E-11	5.00841E-09	5.07565E-09	0.0050756
396966.283767477.2	396966.28	3767477	5.0315E-06	5.0315E-06	0	0	0	0	2.0126E-05	2.0126E-05	0	0	6.82375E-11	5.08297E-09	5.1512E-09	0.0051512
397066.283767477.2	397066.28	3767477	4.93481E-06	4.93481E-06	0	0	0	0	1.97392E-05	1.97392E-05	0	0	6.69261E-11	4.98528E-09	5.05221E-09	0.0050522
397166.283767477.2	397166.28	3767477	4.77938E-06	4.77938E-06	0	0	0	0	1.91175E-05	1.91175E-05	0	0	6.48183E-11	4.82827E-09	4.89309E-09	0.0048931
397266.283767477.2	397266.28	3767477	4.79518E-06	4.79518E-06	0	0	0	0	1.91807E-05	1.91807E-05	0	0	6.50325E-11	4.84423E-09	4.90926E-09	0.0049093
397366.283767477.2	397366.28	3767477	4.65093E-06	4.65093E-06	0	0	0	0	1.86037E-05	1.86037E-05	0	0	6.30761E-11	4.6985E-09	4.76158E-09	0.0047616
397466.283767477.2	397466.28	3767477	4.19494E-06	4.19494E-06	0	0	0	0	1.67798E-05	1.67798E-05	0	0	5.6892E-11	4.23785E-09	4.29474E-09	0.0042947
397566.283767477.2	397566.28	3767477	3.9783E-06	3.9783E-06	0	0	0	0	1.59132E-05	1.59132E-05	0	0	5.3954E-11	4.019E-09	4.07295E-09	0.004073
397666.283767477.2	397666.28	3767477	3.89105E-06	3.89105E-06	0	0	0	0	1.55642E-05	1.55642E-05	0	0	5.27707E-11	3.93085E-09	3.98363E-09	0.0039836
397766.283767477.2	397766.28	3767477	3.79864E-06	3.79864E-06	0	0	0	0	1.51946E-05	1.51946E-05	0	0	5.15174E-11	3.8375E-09	3.88901E-09	0.003889
397866.283767477.2	397866.28	3767477	3.65582E-06	3.65582E-06	0	0	0	0	1.46233E-05	1.46233E-05	0	0	4.95804E-11	3.69321E-09	3.74279E-09	0.0037428
396166.283767577.2	396166.28	3767577	4.64617E-06	4.64617E-06	0	0	0	0	1.85847E-05	1.85847E-05	0	0	6.30116E-11	4.69369E-09	4.7567E-09	0.0047567
396266.283767577.2	396266.28	3767577	4.77621E-06	4.77621E-06	0	0	0	0	1.91048E-05	1.91048E-05	0	0	6.47752E-11	4.82507E-09	4.88984E-09	0.0048898
396366.283767577.2	396366.28	3767577	4.99528E-06	4.99528E-06	0	0	0	0	1.99811E-05	1.99811E-05	0	0	6.77463E-11	5.04638E-09	5.11412E-09	0.0051141
396466.283767577.2	396466.28	3767577	5.30423E-06	5.30423E-06	0	0	0	0	2.12169E-05	2.12169E-05	0	0	7.19363E-11	5.35849E-09	5.43042E-09	0.0054304
396566.283767577.2	396566.28	3767577	5.89209E-06	5.89209E-06	0	0	0	0	2.35684E-05	2.35684E-05	0	0	7.99089E-11	5.95236E-09	6.03227E-09	0.0060323
396666.283767577.2	396666.28	3767577	5.9828E-06	5.9828E-06	0	0	0	0	2.39312E-05	2.39312E-05	0	0	8.1139E-11	6.04399E-09	6.12513E-09	0.0061251
396766.283767577.2	396766.28	3767577	5.64161E-06	5.64161E-06	0	0	0	0	2.25665E-05	2.25665E-05	0	0	7.65119E-11	5.69932E-09	5.77583E-09	0.0057758
396866.283767577.2	396866.28	3767577	5.78386E-06	5.78386E-06	0	0	0	0	2.31354E-05	2.31354E-05	0	0	7.8441E-11	5.84302E-09	5.92146E-09	0.0059215

Garvey Reservoir Rehab - Mitigated Reservoir Cover and Liner Work			Demolition - 2025	Demolition - 2026	Site Preparation - 2025	te Preparation - 202	Grading - 2025	Grading - 2026	Infrastructure - 2025	nfrastructure - 2026	Paving - 2025	rchitectural Coating - 202	Child Risk			
Unique Identifier	X (UTM)	Y (UTM)	2025	2026	1900	1900	1900	1900	2026	2027	1900	1900	3rd Trimester	0<2	Total	per million
396966.283767577.2	396966.28	3767577	5.86296E-06	5.86296E-06	0	0	0	0	2.34518E-05	2.34518E-05	0	0	7.95138E-11	5.92293E-09	6.00244E-09	0.0060024
397066.283767577.2	397066.28	3767577	5.86437E-06	5.86437E-06	0	0	0	0	2.34575E-05	2.34575E-05	0	0	7.95329E-11	5.92436E-09	6.00389E-09	0.0060039
397166.283767577.2	397166.28	3767577	5.64799E-06	5.64799E-06	0	0	0	0	2.2592E-05	2.2592E-05	0	0	7.65984E-11	5.70577E-09	5.78236E-09	0.0057824
397266.283767577.2	397266.28	3767577	5.57311E-06	5.57311E-06	0	0	0	0	2.22924E-05	2.22924E-05	0	0	7.55828E-11	5.63012E-09	5.7057E-09	0.0057057
397366.283767577.2	397366.28	3767577	5.43422E-06	5.43422E-06	0	0	0	0	2.17369E-05	2.17369E-05	0	0	7.36991E-11	5.4898E-09	5.5635E-09	0.0055635
397466.283767577.2	397466.28	3767577	4.84076E-06	4.84076E-06	0	0	0	0	1.9363E-05	1.9363E-05	0	0	6.56506E-11	4.89027E-09	4.95592E-09	0.0049559
397566.283767577.2	397566.28	3767577	4.56601E-06	4.56601E-06	0	0	0	0	1.8264E-05	1.8264E-05	0	0	6.19244E-11	4.61271E-09	4.67464E-09	0.0046746
397666.283767577.2	397666.28	3767577	4.31766E-06	4.31766E-06	0	0	0	0	1.72706E-05	1.72706E-05	0	0	5.85564E-11	4.36183E-09	4.42038E-09	0.0044204
397766.283767577.2	397766.28	3767577	4.15353E-06	4.15353E-06	0	0	0	0	1.66141E-05	1.66141E-05	0	0	5.63304E-11	4.19601E-09	4.25234E-09	0.0042523
397866.283767577.2	397866.28	3767577	3.94844E-06	3.94844E-06	0	0	0	0	1.57938E-05	1.57938E-05	0	0	5.3549E-11	3.98883E-09	4.04238E-09	0.0040424
396166.283767677.2	396166.28	3767677	5.62549E-06	5.62549E-06	0	0	0	0	2.25019E-05	2.25019E-05	0	0	7.62932E-11	5.68303E-09	5.75932E-09	0.0057593
396266.283767677.2	396266.28	3767677	5.32253E-06	5.32253E-06	0	0	0	0	2.12901E-05	2.12901E-05	0	0	7.21845E-11	5.37697E-09	5.44916E-09	0.0054492
396366.283767677.2	396366.28	3767677	5.67165E-06	5.67165E-06	0	0	0	0	2.26866E-05	2.26866E-05	0	0	7.69192E-11	5.72966E-09	5.80658E-09	0.0058066
396466.283767677.2	396466.28	3767677	6.70851E-06	6.70851E-06	0	0	0	0	2.6834E-05	2.6834E-05	0	0	9.09811E-11	6.77713E-09	6.86811E-09	0.0068681
396566.283767677.2	396566.28	3767677	6.76935E-06	6.76935E-06	0	0	0	0	2.70774E-05	2.70774E-05	0	0	9.18063E-11	6.8386E-09	6.9304E-09	0.0069304
396666.283767677.2	396666.28	3767677	6.34121E-06	6.34121E-06	0	0	0	0	2.53649E-05	2.53649E-05	0	0	8.59999E-11	6.40608E-09	6.49208E-09	0.0064921
396766.283767677.2	396766.28	3767677	6.60139E-06	6.60139E-06	0	0	0	0	2.64056E-05	2.64056E-05	0	0	8.95284E-11	6.66892E-09	6.75845E-09	0.0067584
396866.283767677.2	396866.28	3767677	6.97234E-06	6.97234E-06	0	0	0	0	2.78894E-05	2.78894E-05	0	0	9.45593E-11	7.04366E-09	7.13822E-09	0.0071382
396966.283767677.2	396966.28	3767677	7.04825E-06	7.04825E-06	0	0	0	0	2.8193E-05	2.8193E-05	0	0	9.55887E-11	7.12034E-09	7.21593E-09	0.0072159
397066.283767677.2	397066.28	3767677	7.02703E-06	7.02703E-06	0	0	0	0	2.81081E-05	2.81081E-05	0	0	9.5301E-11	7.09891E-09	7.19421E-09	0.0071942
397166.283767677.2	397166.28	3767677	6.87159E-06	6.87159E-06	0	0	0	0	2.74864E-05	2.74864E-05	0	0	9.31929E-11	6.94188E-09	7.03507E-09	0.0070351
397266.283767677.2	397266.28	3767677	6.30158E-06	6.30158E-06	0	0	0	0	2.52063E-05	2.52063E-05	0	0	8.54624E-11	6.36604E-09	6.4515E-09	0.0064515
397366.283767677.2	397366.28	3767677	6.41003E-06	6.41003E-06	0	0	0	0	2.56401E-05	2.56401E-05	0	0	8.69332E-11	6.4756E-09	6.56253E-09	0.0065625
397466.283767677.2	397466.28	3767677	5.51298E-06	5.51298E-06	0	0	0	0	2.20519E-05	2.20519E-05	0	0	7.47673E-11	5.56937E-09	5.64413E-09	0.0056441
397566.283767677.2	397566.28	3767677	5.28934E-06	5.28934E-06	0	0	0	0	2.11573E-05	2.11573E-05	0	0	7.17343E-11	5.34344E-09	5.41517E-09	0.0054152
397666.283767677.2	397666.28	3767677	4.98117E-06	4.98117E-06	0	0	0	0	1.99247E-05	1.99247E-05	0	0	6.75549E-11	5.03212E-09	5.09968E-09	0.0050997
397766.283767677.2	397766.28	3767677	4.64986E-06	4.64986E-06	0	0	0	0	1.85994E-05	1.85994E-05	0	0	6.30616E-11	4.69742E-09	4.76048E-09	0.0047605
397866.283767677.2	397866.28	3767677	4.42501E-06	4.42501E-06	0	0	0	0	1.77001E-05	1.77001E-05	0	0	6.00123E-11	4.47028E-09	4.53029E-09	0.0045303
396166.283767777.2	396166.28	3767777	6.31355E-06	6.31355E-06	0	0	0	0	2.52542E-05	2.52542E-05	0	0	8.56247E-11	6.37813E-09	6.46376E-09	0.0064638
396266.283767777.2	396266.28	3767777	7.17219E-06	7.17219E-06	0	0	0	0	2.86888E-05	2.86888E-05	0	0	9.72697E-11	7.24556E-09	7.34283E-09	0.0073428
396366.283767777.2	396366.28	3767777	6.98034E-06	6.98034E-06	0	0	0	0	2.79214E-05	2.79214E-05	0	0	9.46677E-11	7.05174E-09	7.14641E-09	0.0071464
396466.283767777.2	396466.28	3767777	7.36938E-06	7.36938E-06	0	0	0	0	2.94775E-05	2.94775E-05	0	0	9.9944E-11	7.44476E-09	7.54471E-09	0.0075447
396566.283767777.2	396566.28	3767777	6.97725E-06	6.97725E-06	0	0	0	0	2.7909E-05	2.7909E-05	0	0	9.46258E-11	7.04862E-09	7.14324E-09	0.0071432
396666.283767777.2	396666.28	3767777	7.33794E-06	7.33794E-06	0	0	0	0	2.93518E-05	2.93518E-05	0	0	9.95176E-11	7.413E-09	7.51252E-09	0.0075125
396766.283767777.2	396766.28	3767777	8.04307E-06	8.04307E-06	0	0	0	0	3.21723E-05	3.21723E-05	0	0	1.09081E-10	8.12534E-09	8.23442E-09	0.0082344
396866.283767777.2	396866.28	3767777	8.58934E-06	8.58934E-06	0	0	0	0	3.43574E-05	3.43574E-05	0	0	1.16489E-10	8.6772E-09	8.79369E-09	0.0087937
396966.283767777.2	396966.28	3767777	8.48403E-06	8.48403E-06	0	0	0	0	3.39361E-05	3.39361E-05	0	0	1.15061E-10	8.57081E-09	8.68587E-09	0.0086859
397066.283767777.2	397066.28	3767777	8.49567E-06	8.49567E-06	0	0	0	0	3.39827E-05	3.39827E-05	0	0	1.15219E-10	8.58257E-09	8.69779E-09	0.0086978
397166.283767777.2	397166.28	3767777	8.50727E-06	8.50727E-06	0	0	0	0	3.40291E-05	3.40291E-05	0	0	1.15376E-10	8.59429E-09	8.70967E-09	0.0087097
397266.283767777.2	397266.28	3767777	7.91515E-06	7.91515E-06	0	0	0	0	3.16606E-05	3.16606E-05	0	0	1.07346E-10	7.99611E-09	8.10345E-09	0.0081035
397366.283767777.2	397366.28	3767777	7.76167E-06	7.76167E-06	0	0	0	0	3.10467E-05	3.10467E-05	0	0	1.05264E-10	7.84106E-09	7.94632E-09	0.0079463
397466.283767777.2	397466.28	3767777	6.69808E-06	6.69808E-06	0	0	0	0	2.67923E-05	2.67923E-05	0	0	9.08398E-11	6.7666E-09	6.85743E-09	0.0068574
397566.283767777.2	397566.28	3767777	6.17864E-06	6.17864E-06	0	0	0	0	2.47146E-05	2.47146E-05	0	0	8.37951E-11	6.24184E-09	6.32564E-09	0.0063256
397666.283767777.2	397666.28	3767777	5.88008E-06	5.88008E-06	0	0	0	0	2.35203E-05	2.35203E-05	0	0	7.9746E-11	5.94023E-09	6.01998E-09	0.00602
397766.283767777.2	397766.28	3767777	5.25012E-06	5.25012E-06	0	0	0	0	2.10005E-05	2.10005E-05	0	0	7.12025E-11	5.30383E-09	5.37503E-09	0.005375
397866.283767777.2	397866.28	3767777	4.7865E-06	4.7865E-06	0	0	0	0	1.9146E-05	1.9146E-05	0	0	6.49148E-11	4.83547E-09	4.90038E-09	0.0049004
396166.283767877.2	396166.28	3767877	6.97761E-06	6.97761E-06	0	0	0	0	2.79105E-05	2.79105E-05	0	0	9.46308E-11	7.04899E-09	7.14362E-09	0.0071436
396266.283767877.2	396266.28	3767877	8.05927E-06	8.05927E-06	0	0	0	0	3.22371E-05	3.22371E-05	0	0	1.093E-10	8.1417E-09	8.251E-09	0.008251
396366.283767877.2	396366.28	3767877	8.5193E-06	8.5193E-06	0	0	0	0	3.40772E-05	3.40772E-05	0	0	1.15539E-10	8.60644E-09	8.72198E-09	0.008722
396466.283767877.2	396466.28	3767877	8.08394E-06	8.08394E-06	0	0	0	0	3.23358E-05	3.23358E-05	0	0	1.09635E-10	8.16663E-09	8.27627E-09	0.0082763
396566.283767877.2	396566.28	3767877	8.00101E-06	8.00101E-06	0	0	0	0	3.2004E-05	3.2004E-05	0	0	1.0851E-10	8.08285E-09	8.19136E-09	0.0081914
397466.283767877.2	397466.28	3767877	9.38054E-06	9.38054E-06	0	0	0	0	3.75222E-05	3.75222E-05	0	0	1.27219E-10	9.47649E-09	9.60371E-09	0.0096037
397566.283767877.2	397566.28	3767877	7.38854E-06	7.38854E-06	0	0	0	0	2.95542E-05	2.95542E-05	0	0	1.00204E-10	7.46412E-09	7.56432E-09	0.0075643
397666.283767877.2	397666.28	3767877	6.22835E-06	6.22835E-06	0	0	0	0	2.49134E-05	2.49134E-05	0	0	8.44692E-11	6.29206E-09	6.37653E-09	0.0063765
397766.283767877.2	397766.28	3767877	5.51313E-06	5.51313E-06	0	0	0	0	2.20525E-05	2.20525E-05	0	0	7.47694E-11	5.56953E-09	5.6443E-09	0.0056443
397866.283767877.2	397866.28	3767877	5.52227E-06	5.52227E-06	0	0	0	0	2.20891E-05	2.20891E-05	0	0	7.48934E-11	5.57876E-09	5.65365E-09	0.0056537
396166.283767977.2	396166.28	3767977	7.31371E-06	7.31371E-06	0	0	0	0	2.92548E-05	2.92548E-05	0	0	9.91889E-11	7.38852E-09	7.48771E-09	0.0074877
396266.283767977.2	396266.28	3767977	8.45174E-06	8.45174E-06	0	0	0	0	3.3807E-05	3.3807E-05	0	0	1.14623E-10	8.53819E-09	8.65282E-09	0.0086528
396366.283767977.2	396366.28	3767977	9.14145E-06	9.14145E-06	0	0	0	0	3.65658E-05	3.65658E-05	0	0	1.23977E-10	9.23496E-09	9.35894E-09	0.0093589
396466.283767977.2	396466.28	3767977	8.78313E-06	8.78313E-06	0	0	0	0	3.51325E-05	3.51325E-05	0	0	1.19117E-10	8.87297E-09	8.99209E-09	0.0089921
397466.283767977.2	397466.28	3767977	1.10631E-05	1.10631E-05	0	0	0	0	4.42525E-05	4.42525E-05	0	0	1.50039E-10	1.11763E-08	1.13263E-08	0.0113263
397566.283767977.2	397566.28	3767977	8.93416E-06	8.93416E-06	0	0	0	0	3.57366E-05	3.57366E-05	0	0	1.21166E-10	9.02554E-09	9.14671E-09	0.0091467
397666.283767977.2	397666.28	3767977	7.41573E-06	7.41573E-06	0	0	0	0	2.96629E-05	2.96629E-05	0	0	1.00573E-10	7.49159E-09	7.59216E-09	0.0075922
397766.283767977.2	397766.28	3767977	7.47003E-06	7.47003E-06	0	0	0	0	2.98801E-05	2.98801E-05	0	0	1.01309E-10	7.54644E-09	7.64775E-09	0.0076478
397866.283767977.2	397866.28	3767977	6.83119E-06	6.83119E-06	0	0	0	0	2.73248E-05	2.73248E-05	0	0	9.2645E-11	6.90107E-09	6.99371E-09	0.0069937
396166.283768077.2	396166.28	3768077	9.85953E-06	9.85953E-06	0	0	0	0	3.94381E-05	3.94381E-05	0	0	1.33715E-10	9.96038E-09	1.00941E-08	0.0100941
396266.283768077.2	396266.28	3768077	9.34415E-06	9.34415E-06	0	0	0	0	3.73766E-05	3.73766E-05	0	0	1.26726E-10	9.43973E-09	9.56646E-09	0.0095665
396366.283768077.2	396366.28	3768077	1.014E-05	1.014E-05	0	0	0	0	4.05602E-05	4.05602E-05	0	0	1.3752E-10	1.02438E-08	1.03813E-08	0.0103813
396466.283768077.2	396466.28	3768077	1.09769E-05	1.09769E-05	0	0	0	0	4.39075E-05	4.39075E-05	0	0	1.48869E-10	1.10892E-08	1.1238E-08	0.011238
397466.283768077.2	397466.28	3768077	1.91987E-05	1.91987E-05	0	0	0	0	7.67948E-05	7.67948E-05	0	0	2.60374E-10	1.93951E-08	1.96555E-08	0.0196555
397566.283768077.2	397566.28	3768077	1.51719E-05	1.51719E-05	0	0	0	0	6.06878E-05	6.06878E-05	0	0	2.05763E-10	1.53271E-08	1.55329E-08	0.0155329

Garvey Reservoir Rehab - Mitigated Reservoir Cover and Liner Work			Demolition - 2025	Demolition - 2026	Site Preparation - 2025	te Preparation - 202	Grading - 2025	Grading - 2026	Infrastructure - 2025	nfrastructure - 2026	Paving - 2025	rchitectural Coating - 202	Child Risk			
Unique Identifier	X (UTM)	Y (UTM)	2025	2026	1900	1900	1900	1900	2026	2027	1900	1900	3rd Trimester	0<2	Total	per million
397666.283768077.2	397666.28	3768077	1.13827E-05	1.13827E-05	0	0	0	0	4.55308E-05	4.55308E-05	0	0	1.54373E-10	1.14991E-08	1.16535E-08	0.0116535
397766.283768077.2	397766.28	3768077	8.88752E-06	8.88752E-06	0	0	0	0	3.55501E-05	3.55501E-05	0	0	1.20533E-10	8.97843E-09	9.09896E-09	0.009099
397866.283768077.2	397866.28	3768077	7.70344E-06	7.70344E-06	0	0	0	0	3.08138E-05	3.08138E-05	0	0	1.04474E-10	7.78224E-09	7.88671E-09	0.0078867
396166.283768177.2	396166.28	3768177	1.18911E-05	1.18911E-05	0	0	0	0	4.75642E-05	4.75642E-05	0	0	1.61267E-10	1.20127E-08	1.2174E-08	0.012174
396266.283768177.2	396266.28	3768177	1.22816E-05	1.22816E-05	0	0	0	0	4.91265E-05	4.91265E-05	0	0	1.66564E-10	1.24073E-08	1.25738E-08	0.0125738
396366.283768177.2	396366.28	3768177	1.337E-05	1.337E-05	0	0	0	0	5.348E-05	5.348E-05	0	0	1.81325E-10	1.35068E-08	1.36881E-08	0.0136881
396466.283768177.2	396466.28	3768177	1.31649E-05	1.31649E-05	0	0	0	0	5.26595E-05	5.26595E-05	0	0	1.78543E-10	1.32995E-08	1.34781E-08	0.0134781
397466.283768177.2	397466.28	3768177	4.19871E-05	4.19871E-05	0	0	0	0	0.000167948	0.000167948	0	0	5.69432E-10	4.24166E-08	4.2986E-08	0.042986
397566.283768177.2	397566.28	3768177	2.20253E-05	2.20253E-05	0	0	0	0	8.81012E-05	8.81012E-05	0	0	2.98708E-10	2.22506E-08	2.25493E-08	0.0225493
397666.283768177.2	397666.28	3768177	1.50304E-05	1.50304E-05	0	0	0	0	6.01216E-05	6.01216E-05	0	0	2.03843E-10	1.51842E-08	1.5388E-08	0.015388
397766.283768177.2	397766.28	3768177	1.10837E-05	1.10837E-05	0	0	0	0	4.4335E-05	4.4335E-05	0	0	1.50318E-10	1.11971E-08	1.13474E-08	0.0113474
397866.283768177.2	397866.28	3768177	9.09468E-06	9.09468E-06	0	0	0	0	3.63787E-05	3.63787E-05	0	0	1.23343E-10	9.18771E-09	9.31105E-09	0.009311
396166.283768277.2	396166.28	3768277	1.41424E-05	1.41424E-05	0	0	0	0	5.65695E-05	5.65695E-05	0	0	1.918E-10	1.4287E-08	1.44788E-08	0.0144788
396266.283768277.2	396266.28	3768277	1.39172E-05	1.39172E-05	0	0	0	0	5.56687E-05	5.56687E-05	0	0	1.88746E-10	1.40595E-08	1.42483E-08	0.0142483
396366.283768277.2	396366.28	3768277	1.56228E-05	1.56228E-05	0	0	0	0	6.24911E-05	6.24911E-05	0	0	2.11877E-10	1.57826E-08	1.59945E-08	0.0159945
396466.283768277.2	396466.28	3768277	1.61667E-05	1.61667E-05	0	0	0	0	6.46669E-05	6.46669E-05	0	0	2.19254E-10	1.63321E-08	1.65513E-08	0.0165513
397366.283768277.2	397366.28	3768277	0.000333703	0.000333703	0	0	0	0	0.001334813	0.001334813	0	0	4.5257E-09	3.37117E-07	3.41642E-07	0.3416423
397466.283768277.2	397466.28	3768277	6.55061E-05	6.55061E-05	0	0	0	0	0.000262024	0.000262024	0	0	8.88398E-10	6.61762E-08	6.70646E-08	0.0670646
397566.283768277.2	397566.28	3768277	2.99056E-05	2.99056E-05	0	0	0	0	0.000119622	0.000119622	0	0	4.05581E-10	3.02115E-08	3.06171E-08	0.0306171
397666.283768277.2	397666.28	3768277	1.87384E-05	1.87384E-05	0	0	0	0	7.49535E-05	7.49535E-05	0	0	2.54131E-10	1.89301E-08	1.91842E-08	0.0191842
397766.283768277.2	397766.28	3768277	1.3423E-05	1.3423E-05	0	0	0	0	5.36921E-05	5.36921E-05	0	0	1.82044E-10	1.35603E-08	1.37424E-08	0.0137424
397866.283768277.2	397866.28	3768277	1.03337E-05	1.03337E-05	0	0	0	0	4.13347E-05	4.13347E-05	0	0	1.40146E-10	1.04394E-08	1.05795E-08	0.0105795
396166.283768377.2	396166.28	3768377	1.6667E-05	1.6667E-05	0	0	0	0	6.66679E-05	6.66679E-05	0	0	2.26038E-10	1.68375E-08	1.70635E-08	0.0170635
396266.283768377.2	396266.28	3768377	1.73546E-05	1.73546E-05	0	0	0	0	6.94184E-05	6.94184E-05	0	0	2.35364E-10	1.75321E-08	1.77675E-08	0.0177675
396366.283768377.2	396366.28	3768377	1.93763E-05	1.93763E-05	0	0	0	0	7.75053E-05	7.75053E-05	0	0	2.62783E-10	1.95745E-08	1.98373E-08	0.0198373
396466.283768377.2	396466.28	3768377	2.09048E-05	2.09048E-05	0	0	0	0	8.36192E-05	8.36192E-05	0	0	2.83512E-10	2.11186E-08	2.14021E-08	0.0214021
397266.283768377.2	397266.28	3768377	0.000523875	0.000523875	0	0	0	0	0.002095499	0.002095499	0	0	7.10482E-09	5.29233E-07	5.36338E-07	0.5363383
397366.283768377.2	397366.28	3768377	0.000235623	0.000235623	0	0	0	0	0.000942491	0.000942491	0	0	3.19553E-09	2.38033E-07	2.41229E-07	0.2412285
397466.283768377.2	397466.28	3768377	7.603E-05	7.603E-05	0	0	0	0	0.00030412	0.00030412	0	0	1.03112E-09	7.68077E-08	7.78388E-08	0.0778388
397566.283768377.2	397566.28	3768377	3.65004E-05	3.65004E-05	0	0	0	0	0.000146002	0.000146002	0	0	4.95021E-10	3.68738E-08	3.73688E-08	0.0373688
397666.283768377.2	397666.28	3768377	2.21244E-05	2.21244E-05	0	0	0	0	8.84976E-05	8.84976E-05	0	0	3.00052E-10	2.23507E-08	2.26508E-08	0.0226508
397766.283768377.2	397766.28	3768377	1.55538E-05	1.55538E-05	0	0	0	0	6.22152E-05	6.22152E-05	0	0	2.10942E-10	1.57129E-08	1.59239E-08	0.0159239
397866.283768377.2	397866.28	3768377	1.11884E-05	1.11884E-05	0	0	0	0	4.47537E-05	4.47537E-05	0	0	1.51738E-10	1.13029E-08	1.14546E-08	0.0114546
396166.283768477.2	396166.28	3768477	2.04481E-05	2.04481E-05	0	0	0	0	8.17925E-05	8.17925E-05	0	0	2.77319E-10	2.06573E-08	2.09346E-08	0.0209346
396266.283768477.2	396266.28	3768477	2.20367E-05	2.20367E-05	0	0	0	0	8.8147E-05	8.8147E-05	0	0	2.98864E-10	2.22622E-08	2.2561E-08	0.022561
396366.283768477.2	396366.28	3768477	2.44257E-05	2.44257E-05	0	0	0	0	9.77028E-05	9.77028E-05	0	0	3.31263E-10	2.46756E-08	2.50068E-08	0.0250068
396466.283768477.2	396466.28	3768477	2.73511E-05	2.73511E-05	0	0	0	0	0.000109405	0.000109405	0	0	3.70938E-10	2.76309E-08	2.80018E-08	0.0280018
397166.283768477.2	397166.28	3768477	9.73672E-05	9.73672E-05	0	0	0	0	0.000389469	0.000389469	0	0	1.3205E-09	9.83632E-08	9.96837E-08	0.0996837
397266.283768477.2	397266.28	3768477	0.000531762	0.000531762	0	0	0	0	0.002127047	0.002127047	0	0	7.21178E-09	5.37201E-07	5.44413E-07	0.5444129
397366.283768477.2	397366.28	3768477	0.000215441	0.000215441	0	0	0	0	0.000861764	0.000861764	0	0	2.92182E-09	2.17645E-07	2.20566E-07	0.2205665
397466.283768477.2	397466.28	3768477	7.00666E-05	7.00666E-05	0	0	0	0	0.000280266	0.000280266	0	0	9.50247E-10	7.07833E-08	7.17335E-08	0.0717335
397566.283768477.2	397566.28	3768477	4.18824E-05	4.18824E-05	0	0	0	0	0.00016753	0.00016753	0	0	5.68011E-10	4.23108E-08	4.28788E-08	0.0428788
397666.283768477.2	397666.28	3768477	2.59892E-05	2.59892E-05	0	0	0	0	0.000103957	0.000103957	0	0	3.52467E-10	2.6255E-08	2.66075E-08	0.0266075
397766.283768477.2	397766.28	3768477	1.64422E-05	1.64422E-05	0	0	0	0	6.57689E-05	6.57689E-05	0	0	2.22991E-10	1.66104E-08	1.68334E-08	0.0168334
397866.283768477.2	397866.28	3768477	1.28178E-05	1.28178E-05	0	0	0	0	5.12712E-05	5.12712E-05	0	0	1.73836E-10	1.29489E-08	1.31227E-08	0.0131227
396166.283768577.2	396166.28	3768577	2.60193E-05	2.60193E-05	0	0	0	0	0.000104077	0.000104077	0	0	3.52875E-10	2.62854E-08	2.66383E-08	0.0266383
396266.283768577.2	396266.28	3768577	2.93301E-05	2.93301E-05	0	0	0	0	0.00011732	0.00011732	0	0	3.97777E-10	2.96301E-08	3.00279E-08	0.0300279
396366.283768577.2	396366.28	3768577	3.16434E-05	3.16434E-05	0	0	0	0	0.000126574	0.000126574	0	0	4.2915E-10	3.19671E-08	3.23963E-08	0.0323963
396466.283768577.2	396466.28	3768577	3.79976E-05	3.79976E-05	0	0	0	0	0.00015199	0.00015199	0	0	5.15326E-10	3.83863E-08	3.89016E-08	0.0389016
396566.283768577.2	396566.28	3768577	3.72132E-05	3.72132E-05	0	0	0	0	0.000148853	0.000148853	0	0	5.04687E-10	3.75938E-08	3.80985E-08	0.0380985
396866.283768577.2	396866.28	3768577	4.76217E-05	4.76217E-05	0	0	0	0	0.000190487	0.000190487	0	0	6.45848E-10	4.81088E-08	4.87547E-08	0.0487547
396966.283768577.2	396966.28	3768577	5.52952E-05	5.52952E-05	0	0	0	0	0.000221181	0.000221181	0	0	7.49917E-10	5.58608E-08	5.66107E-08	0.0566107
397066.283768577.2	397066.28	3768577	6.83391E-05	6.83391E-05	0	0	0	0	0.000273356	0.000273356	0	0	9.26819E-10	6.90381E-08	6.9965E-08	0.069965
397166.283768577.2	397166.28	3768577	0.000117007	0.000117007	0	0	0	0	0.000468027	0.000468027	0	0	1.58685E-09	1.18204E-07	1.1979E-07	0.1197905
397266.283768577.2	397266.28	3768577	0.000515848	0.000515848	0	0	0	0	0.002063391	0.002063391	0	0	6.99596E-09	5.21124E-07	5.2812E-07	0.5281204
397366.283768577.2	397366.28	3768577	0.000216068	0.000216068	0	0	0	0	0.00086427	0.00086427	0	0	2.93032E-09	2.18278E-07	2.21208E-07	0.2212081
397466.283768577.2	397466.28	3768577	6.92328E-05	6.92328E-05	0	0	0	0	0.000276931	0.000276931	0	0	9.38939E-10	6.9941E-08	7.08799E-08	0.0708799
397566.283768577.2	397566.28	3768577	4.14429E-05	4.14429E-05	0	0	0	0	0.000165772	0.000165772	0	0	5.62051E-10	4.18668E-08	4.24289E-08	0.0424289
397666.283768577.2	397666.28	3768577	2.75516E-05	2.75516E-05	0	0	0	0	0.000110207	0.000110207	0	0	3.73657E-10	2.78335E-08	2.82071E-08	0.0282071
397766.283768577.2	397766.28	3768577	1.96067E-05	1.96067E-05	0	0	0	0	7.84267E-05	7.84267E-05	0	0	2.65907E-10	1.98072E-08	2.00731E-08	0.0200731
397866.283768577.2	397866.28	3768577	1.43156E-05	1.43156E-05	0	0	0	0	5.72625E-05	5.72625E-05	0	0	1.94149E-10	1.44621E-08	1.46562E-08	0.0146562
396166.283768677.2	396166.28	3768677	4.57094E-05	4.57094E-05	0	0	0	0	0.000182838	0.000182838	0	0	6.19913E-10	4.61769E-08	4.67969E-08	0.0467969
396266.283768677.2	396266.28	3768677	5.21859E-05	5.21859E-05	0	0	0	0	0.000208744	0.000208744	0	0	7.07749E-10	5.27197E-08	5.34275E-08	0.0534275
396366.283768677.2	396366.28	3768677	5.06731E-05	5.06731E-05	0	0	0	0	0.000202692	0.000202692	0	0	6.87231E-10	5.11914E-08	5.18787E-08	0.0518787
396466.283768677.2	396466.28	3768677	6.22106E-05	6.22106E-05	0	0	0	0	0.000248842	0.000248842	0	0	8.43704E-10	6.28469E-08	6.36907E-08	0.0636907
396566.283768677.2	396566.28	3768677	6.28893E-05	6.28893E-05	0	0	0	0	0.000251557	0.000251557	0	0	8.52909E-10	6.35326E-08	6.43855E-08	0.0643855
396666.283768677.2	396666.28	3768677	6.42071E-05	6.42071E-05	0	0	0	0	0.000256828	0.000256828	0	0	8.7078E-10	6.48638E-08	6.57346E-08	0.0657346
396766.283768677.2	396766.28	3768677	6.66299E-05	6.66299E-05	0	0	0	0	0.00026652	0.00026652	0	0	9.03639E-10	6.73115E-08	6.82151E-08	0.0682151
396866.283768677.2	396866.28	3768677	7.3998E-05	7.3998E-05	0	0	0	0	0.000295992	0.000295992	0	0	1.00356E-09	7.47549E-08	7.57585E-08	0.0757585
396966.283768677.2	396966.28	3768677	8.09988E-05	8.09988E-05	0	0	0	0	0.000323995	0.000323995	0	0	1.09851E-09	8.18273E-08	8.29258E-08	0.0829258
397066.283768677.2	397066.28	3768677	9.39578E-05	9.39578E-05	0	0	0	0	0.000375831	0.000375831	0	0	1.27426E-09	9.49189E-08	9.61931E-08	0.0961931

Garvey Reservoir Rehab - Mitigated Reservoir Cover and Liner Work			Demolition - 2025	Demolition - 2026	Site Preparation - 2025	te Preparation - 202	Grading - 2025	Grading - 2026	Infrastructure - 2025	nfrastructure - 2026	Paving - 2025	rchitectural Coating - 202	Child Risk			
Unique Identifier	X (UTM)	Y (UTM)	2025	2026	1900	1900	1900	1900	2026	2027	1900	1900	3rd Trimester	0<2	Total	per million
397166.283768677.2	397166.28	3768677	0.000147469	0.000147469	0	0	0	0	0.000589875	0.000589875	0	0	1.99998E-09	1.48977E-07	1.50977E-07	0.1509771
397366.283768677.2	397366.28	3768677	0.000196102	0.000196102	0	0	0	0	0.000784408	0.000784408	0	0	2.65955E-09	1.98108E-07	2.00767E-07	0.2007674
397466.283768677.2	397466.28	3768677	7.90103E-05	7.90103E-05	0	0	0	0	0.000316041	0.000316041	0	0	1.07154E-09	7.98185E-08	8.08901E-08	0.0808901
397566.283768677.2	397566.28	3768677	4.30868E-05	4.30868E-05	0	0	0	0	0.000172347	0.000172347	0	0	5.84345E-10	4.35275E-08	4.41118E-08	0.0441118
397666.283768677.2	397666.28	3768677	2.82298E-05	2.82298E-05	0	0	0	0	0.000112919	0.000112919	0	0	3.82854E-10	2.85185E-08	2.89014E-08	0.0289014
397766.283768677.2	397766.28	3768677	2.08218E-05	2.08218E-05	0	0	0	0	8.32872E-05	8.32872E-05	0	0	2.82386E-10	2.10348E-08	2.13172E-08	0.0213172
397866.283768677.2	397866.28	3768677	1.52892E-05	1.52892E-05	0	0	0	0	6.11569E-05	6.11569E-05	0	0	2.07353E-10	1.54456E-08	1.5653E-08	0.015653
396166.283768777.2	396166.28	3768777	0.000132727	0.000132727	0	0	0	0	0.000530908	0.000530908	0	0	1.80005E-09	1.34085E-07	1.35885E-07	0.1358847
396266.283768777.2	396266.28	3768777	0.000164923	0.000164923	0	0	0	0	0.000659691	0.000659691	0	0	2.23669E-09	1.6661E-07	1.68846E-07	0.1688464
396366.283768777.2	396366.28	3768777	0.000120907	0.000120907	0	0	0	0	0.000483627	0.000483627	0	0	1.63975E-09	1.22144E-07	1.23783E-07	0.1237834
396466.283768777.2	396466.28	3768777	0.000157991	0.000157991	0	0	0	0	0.000631966	0.000631966	0	0	2.14269E-09	1.59608E-07	1.6175E-07	0.1617502
396566.283768777.2	396566.28	3768777	0.000169188	0.000169188	0	0	0	0	0.000676751	0.000676751	0	0	2.29453E-09	1.70918E-07	1.73213E-07	0.1732129
396666.283768777.2	396666.28	3768777	0.000169128	0.000169128	0	0	0	0	0.000676514	0.000676514	0	0	2.29373E-09	1.70858E-07	1.73152E-07	0.1731522
396766.283768777.2	396766.28	3768777	0.000174954	0.000174954	0	0	0	0	0.000699818	0.000699818	0	0	2.37274E-09	1.76744E-07	1.79117E-07	0.1791168
396866.283768777.2	396866.28	3768777	0.000181896	0.000181896	0	0	0	0	0.000727583	0.000727583	0	0	2.46688E-09	1.83756E-07	1.86223E-07	0.1862232
396966.283768777.2	396966.28	3768777	0.000186382	0.000186382	0	0	0	0	0.000745526	0.000745526	0	0	2.52772E-09	1.88288E-07	1.90816E-07	0.1908157
397066.283768777.2	397066.28	3768777	0.000200791	0.000200791	0	0	0	0	0.000803166	0.000803166	0	0	2.72314E-09	2.02845E-07	2.05568E-07	0.2055684
397166.283768777.2	397166.28	3768777	0.000241802	0.000241802	0	0	0	0	0.00096721	0.00096721	0	0	3.27934E-09	2.44276E-07	2.47555E-07	0.2475551
397266.283768777.2	397266.28	3768777	0.000771231	0.000771231	0	0	0	0	0.003084923	0.003084923	0	0	1.04595E-08	7.7912E-07	7.89579E-07	0.789579
397366.283768777.2	397366.28	3768777	0.000267969	0.000267969	0	0	0	0	0.001071875	0.001071875	0	0	3.63421E-09	2.7071E-07	2.74344E-07	0.2743441
397466.283768777.2	397466.28	3768777	9.42505E-05	9.42505E-05	0	0	0	0	0.000377002	0.000377002	0	0	1.27823E-09	9.52146E-08	9.64928E-08	0.0964928
397566.283768777.2	397566.28	3768777	5.0549E-05	5.0549E-05	0	0	0	0	0.000202196	0.000202196	0	0	6.85549E-10	5.10661E-08	5.17516E-08	0.0517516
397666.283768777.2	397666.28	3768777	3.17912E-05	3.17912E-05	0	0	0	0	0.000127165	0.000127165	0	0	4.31155E-10	3.21164E-08	3.25476E-08	0.0325476
397766.283768777.2	397766.28	3768777	2.17646E-05	2.17646E-05	0	0	0	0	8.70586E-05	8.70586E-05	0	0	2.95173E-10	2.19873E-08	2.22824E-08	0.0222824
397866.283768777.2	397866.28	3768777	1.58433E-05	1.58433E-05	0	0	0	0	6.33731E-05	6.33731E-05	0	0	2.14867E-10	1.60053E-08	1.62202E-08	0.0162202
396166.283768877.2	396166.28	3768877	0.000534373	0.000534373	0	0	0	0	0.002137491	0.002137491	0	0	7.24719E-09	5.39839E-07	5.47086E-07	0.547086
396266.283768877.2	396266.28	3768877	0.000688214	0.000688214	0	0	0	0	0.002752856	0.002752856	0	0	9.3336E-09	6.95254E-07	7.04587E-07	0.7045872
396366.283768877.2	396366.28	3768877	0.000673899	0.000673899	0	0	0	0	0.002695596	0.002695596	0	0	9.13946E-09	6.80792E-07	6.89932E-07	0.6899317
396466.283768877.2	396466.28	3768877	0.000742351	0.000742351	0	0	0	0	0.002969405	0.002969405	0	0	1.00678E-08	7.49945E-07	7.60013E-07	0.7600126
396566.283768877.2	396566.28	3768877	0.00070014	0.00070014	0	0	0	0	0.002800561	0.002800561	0	0	9.49534E-09	7.07302E-07	7.16797E-07	0.7167973
396666.283768877.2	396666.28	3768877	0.000760661	0.000760661	0	0	0	0	0.003042646	0.003042646	0	0	1.03161E-08	7.68442E-07	7.78758E-07	0.7787583
396766.283768877.2	396766.28	3768877	0.000736205	0.000736205	0	0	0	0	0.002944819	0.002944819	0	0	9.98445E-09	7.43735E-07	7.5372E-07	0.7537198
396866.283768877.2	396866.28	3768877	0.000715148	0.000715148	0	0	0	0	0.002860592	0.002860592	0	0	9.69888E-09	7.22463E-07	7.32162E-07	0.7321622
396966.283768877.2	396966.28	3768877	0.000687674	0.000687674	0	0	0	0	0.002750696	0.002750696	0	0	9.32627E-09	6.94708E-07	7.04034E-07	0.7040344
397066.283768877.2	397066.28	3768877	0.000695221	0.000695221	0	0	0	0	0.002780886	0.002780886	0	0	9.42863E-09	7.02333E-07	7.11761E-07	0.7117615
397166.283768877.2	397166.28	3768877	0.000714546	0.000714546	0	0	0	0	0.002858185	0.002858185	0	0	9.69072E-09	7.21855E-07	7.31546E-07	0.731546
397266.283768877.2	397266.28	3768877	0.000750688	0.000750688	0	0	0	0	0.003002753	0.003002753	0	0	1.01809E-08	7.58367E-07	7.68548E-07	0.768548
397366.283768877.2	397366.28	3768877	0.000369107	0.000369107	0	0	0	0	0.001476427	0.001476427	0	0	5.00585E-09	3.72882E-07	3.77888E-07	0.3778882
397466.283768877.2	397466.28	3768877	9.87798E-05	9.87798E-05	0	0	0	0	0.000395119	0.000395119	0	0	1.33966E-09	9.97902E-08	1.0113E-07	0.1011299
397566.283768877.2	397566.28	3768877	5.05103E-05	5.05103E-05	0	0	0	0	0.000202041	0.000202041	0	0	6.85024E-10	5.1027E-08	5.1712E-08	0.051712
397666.283768877.2	397666.28	3768877	3.1331E-05	3.1331E-05	0	0	0	0	0.000125324	0.000125324	0	0	4.24913E-10	3.16515E-08	3.20764E-08	0.0320764
397766.283768877.2	397766.28	3768877	2.16575E-05	2.16575E-05	0	0	0	0	8.66298E-05	8.66298E-05	0	0	2.9372E-10	2.1879E-08	2.21727E-08	0.0221727
397866.283768877.2	397866.28	3768877	1.60291E-05	1.60291E-05	0	0	0	0	6.41163E-05	6.41163E-05	0	0	2.17387E-10	1.6193E-08	1.64104E-08	0.0164104
3964253767739	396425	3767739	7.20397E-06	7.20397E-06	0	0	0	0	2.88159E-05	2.88159E-05	0	0	9.77007E-11	7.27766E-09	7.37536E-09	0.0073754
3964753767739	396475	3767739	7.37609E-06	7.37609E-06	0	0	0	0	2.95043E-05	2.95043E-05	0	0	1.00035E-10	7.45154E-09	7.55157E-09	0.0075516
3965253767739	396525	3767739	6.87507E-06	6.87507E-06	0	0	0	0	2.75003E-05	2.75003E-05	0	0	9.32401E-11	6.9454E-09	7.03864E-09	0.0070386
3965753767739	396575	3767739	7.07382E-06	7.07382E-06	0	0	0	0	2.82953E-05	2.82953E-05	0	0	9.59355E-11	7.14618E-09	7.24211E-09	0.0072421
3966253767739	396625	3767739	6.79381E-06	6.79381E-06	0	0	0	0	2.71752E-05	2.71752E-05	0	0	9.2138E-11	6.8633E-09	6.95544E-09	0.0069554
3966753767739	396675	3767739	6.95207E-06	6.95207E-06	0	0	0	0	2.78083E-05	2.78083E-05	0	0	9.42844E-11	7.02318E-09	7.11747E-09	0.0071175
3967253767739	396725	3767739	7.26558E-06	7.26558E-06	0	0	0	0	2.90623E-05	2.90623E-05	0	0	9.85362E-11	7.3399E-09	7.43844E-09	0.0074384
3967753767739	396775	3767739	7.32665E-06	7.32665E-06	0	0	0	0	2.93066E-05	2.93066E-05	0	0	9.93644E-11	7.40159E-09	7.50096E-09	0.007501
3968253767739	396825	3767739	7.73952E-06	7.73952E-06	0	0	0	0	3.09581E-05	3.09581E-05	0	0	1.04964E-10	7.81869E-09	7.92365E-09	0.0079237
3968753767739	396875	3767739	7.96493E-06	7.96493E-06	0	0	0	0	3.18597E-05	3.18597E-05	0	0	1.08021E-10	8.0464E-09	8.15442E-09	0.0081544
3969253767739	396925	3767739	7.94294E-06	7.94294E-06	0	0	0	0	3.17717E-05	3.17717E-05	0	0	1.07723E-10	8.02418E-09	8.13191E-09	0.0081319
3969753767739	396975	3767739	7.89019E-06	7.89019E-06	0	0	0	0	3.15608E-05	3.15608E-05	0	0	1.07007E-10	7.9709E-09	8.07791E-09	0.0080779
3970253767739	397025	3767739	7.85697E-06	7.85697E-06	0	0	0	0	3.14279E-05	3.14279E-05	0	0	1.06557E-10	7.93734E-09	8.04389E-09	0.0080439
3970753767739	397075	3767739	7.89709E-06	7.89709E-06	0	0	0	0	3.15883E-05	3.15883E-05	0	0	1.07101E-10	7.97786E-09	8.08497E-09	0.008085
3971253767739	397125	3767739	7.90673E-06	7.90673E-06	0	0	0	0	3.16269E-05	3.16269E-05	0	0	1.07232E-10	7.98761E-09	8.09484E-09	0.0080948
3971753767739	397175	3767739	7.80276E-06	7.80276E-06	0	0	0	0	3.1211E-05	3.1211E-05	0	0	1.05821E-10	7.88258E-09	7.9884E-09	0.0079884
3972253767739	397225	3767739	7.63719E-06	7.63719E-06	0	0	0	0	3.05487E-05	3.05487E-05	0	0	1.03576E-10	7.71531E-09	7.81888E-09	0.0078189
3972753767739	397275	3767739	7.20278E-06	7.20278E-06	0	0	0	0	2.88111E-05	2.88111E-05	0	0	9.76845E-11	7.27645E-09	7.37414E-09	0.0073741
3973253767739	397325	3767739	7.20566E-06	7.20566E-06	0	0	0	0	2.88226E-05	2.88226E-05	0	0	9.77236E-11	7.27937E-09	7.37709E-09	0.0073771
3973753767739	397375	3767739	7.18178E-06	7.18178E-06	0	0	0	0	2.87271E-05	2.87271E-05	0	0	9.73997E-11	7.25524E-09	7.35264E-09	0.0073526
3974253767739	397425	3767739	6.98887E-06	6.98887E-06	0	0	0	0	2.79555E-05	2.79555E-05	0	0	9.47834E-11	7.06035E-09	7.15514E-09	0.0071551
3974753767739	397475	3767739	6.17468E-06	6.17468E-06	0	0	0	0	2.46987E-05	2.46987E-05	0	0	8.37413E-11	6.23784E-09	6.32158E-09	0.0063216
3975253767739	397525	3767739	5.96908E-06	5.96908E-06	0	0	0	0	2.38763E-05	2.38763E-05	0	0	8.0953E-11	6.03013E-09	6.11109E-09	0.0061111
3964253767789	396425	3767789	7.6955E-06	7.6955E-06	0	0	0	0	3.0782E-05	3.0782E-05	0	0	1.04367E-10	7.77422E-09	7.87858E-09	0.0078786
3964753767789	396475	3767789	7.41389E-06	7.41389E-06	0	0	0	0	2.96556E-05	2.96556E-05	0	0	1.00548E-10	7.48973E-09	7.59028E-09	0.0075903
3965253767789	396525	3767789	7.02164E-06	7.02164E-06	0	0	0	0	2.80866E-05	2.80866E-05	0	0	9.52279E-11	7.09347E-09	7.18869E-09	0.0071887
3965753767789	396575	3767789	7.10663E-06	7.10663E-06	0	0	0	0	2.84265E-05	2.84265E-05	0	0	9.63805E-11	7.17932E-09	7.2757E-09	0.0072757
3966253767789	396625	3767789	7.29373E-06	7.29373E-06	0	0	0	0	2.91749E-05	2.91749E-05	0	0	9.8918E-11	7.36834E-09	7.46726E-09	0.0074673

Garvey Reservoir Rehab - Mitigated Reservoir Cover and Liner Work			Demolition - 2025	Demolition - 2026	Site Preparation - 2025	te Preparation - 202	Grading - 2025	Grading - 2026	Infrastructure - 2025	nfrastructure - 2026	Paving - 2025	rchitectural Coating - 202	Child Risk			
Unique Identifier	X (UTM)	Y (UTM)	2025	2026	1900	1900	1900	1900	2026	2027	1900	1900	3rd Trimester	0<2	Total	per million
3966753767789	396675	3767789	7.51273E-06	7.51273E-06	0	0	0	0	3.00509E-05	3.00509E-05	0	0	1.01888E-10	7.58958E-09	7.69147E-09	0.0076915
3967253767789	396725	3767789	8.10376E-06	8.10376E-06	0	0	0	0	3.24151E-05	3.24151E-05	0	0	1.09904E-10	8.18666E-09	8.29656E-09	0.0082966
3967753767789	396775	3767789	8.30081E-06	8.30081E-06	0	0	0	0	3.32032E-05	3.32032E-05	0	0	1.12576E-10	8.38572E-09	8.49829E-09	0.0084983
3968253767789	396825	3767789	8.67271E-06	8.67271E-06	0	0	0	0	3.46908E-05	3.46908E-05	0	0	1.1762E-10	8.76143E-09	8.87904E-09	0.008879
3968753767789	396875	3767789	8.79661E-06	8.79661E-06	0	0	0	0	3.51864E-05	3.51864E-05	0	0	1.193E-10	8.88659E-09	9.00589E-09	0.0090059
3969253767789	396925	3767789	8.79264E-06	8.79264E-06	0	0	0	0	3.51706E-05	3.51706E-05	0	0	1.19246E-10	8.88258E-09	9.00182E-09	0.0090018
3969753767789	396975	3767789	8.68443E-06	8.68443E-06	0	0	0	0	3.47377E-05	3.47377E-05	0	0	1.17779E-10	8.77326E-09	8.89104E-09	0.008891
3970253767789	397025	3767789	8.63588E-06	8.63588E-06	0	0	0	0	3.45435E-05	3.45435E-05	0	0	1.1712E-10	8.72422E-09	8.84134E-09	0.0088413
3970753767789	397075	3767789	8.71677E-06	8.71677E-06	0	0	0	0	3.48671E-05	3.48671E-05	0	0	1.18217E-10	8.80593E-09	8.92415E-09	0.0089241
3971253767789	397125	3767789	8.77979E-06	8.77979E-06	0	0	0	0	3.51192E-05	3.51192E-05	0	0	1.19072E-10	8.8696E-09	8.98867E-09	0.0089887
3971753767789	397175	3767789	8.74035E-06	8.74035E-06	0	0	0	0	3.49614E-05	3.49614E-05	0	0	1.18537E-10	8.82975E-09	8.94829E-09	0.0089483
3972253767789	397225	3767789	8.63093E-06	8.63093E-06	0	0	0	0	3.45237E-05	3.45237E-05	0	0	1.17053E-10	8.71921E-09	8.83627E-09	0.0088363
3972753767789	397275	3767789	8.15315E-06	8.15315E-06	0	0	0	0	3.26126E-05	3.26126E-05	0	0	1.10573E-10	8.23655E-09	8.34712E-09	0.0083471
3973253767789	397325	3767789	7.95506E-06	7.95506E-06	0	0	0	0	3.18203E-05	3.18203E-05	0	0	1.07887E-10	8.03643E-09	8.14432E-09	0.0081443
3973753767789	397375	3767789	7.98046E-06	7.98046E-06	0	0	0	0	3.19218E-05	3.19218E-05	0	0	1.08231E-10	8.06209E-09	8.17032E-09	0.0081703
3974253767789	397425	3767789	7.81708E-06	7.81708E-06	0	0	0	0	3.12683E-05	3.12683E-05	0	0	1.06016E-10	7.89704E-09	8.00305E-09	0.0080031
3974753767789	397475	3767789	6.81191E-06	6.81191E-06	0	0	0	0	2.72477E-05	2.72477E-05	0	0	9.23836E-11	6.88159E-09	6.97398E-09	0.006974
3975253767789	397525	3767789	6.60683E-06	6.60683E-06	0	0	0	0	2.64273E-05	2.64273E-05	0	0	8.96022E-11	6.67441E-09	6.76401E-09	0.006764
3964253767839	396425	3767839	8.21604E-06	8.21604E-06	0	0	0	0	3.28642E-05	3.28642E-05	0	0	1.11426E-10	8.30009E-09	8.41151E-09	0.0084115
3964753767839	396475	3767839	8.16376E-06	8.16376E-06	0	0	0	0	3.26551E-05	3.26551E-05	0	0	1.10717E-10	8.24727E-09	8.35799E-09	0.008358
3965253767839	396525	3767839	7.40369E-06	7.40369E-06	0	0	0	0	2.96148E-05	2.96148E-05	0	0	1.00409E-10	7.47942E-09	7.57983E-09	0.0075798
3965753767839	396575	3767839	7.61628E-06	7.61628E-06	0	0	0	0	3.04651E-05	3.04651E-05	0	0	1.03292E-10	7.69419E-09	7.79748E-09	0.0077975
3966253767839	396625	3767839	7.84574E-06	7.84574E-06	0	0	0	0	3.1383E-05	3.1383E-05	0	0	1.06404E-10	7.926E-09	8.0324E-09	0.0080324
3966753767839	396675	3767839	8.75109E-06	8.75109E-06	0	0	0	0	3.50044E-05	3.50044E-05	0	0	1.18683E-10	8.8406E-09	8.95929E-09	0.0089593
3967253767839	396725	3767839	9.16746E-06	9.16746E-06	0	0	0	0	3.66698E-05	3.66698E-05	0	0	1.2433E-10	9.26123E-09	9.38556E-09	0.0093856
3967753767839	396775	3767839	9.40771E-06	9.40771E-06	0	0	0	0	3.76308E-05	3.76308E-05	0	0	1.27588E-10	9.50394E-09	9.63153E-09	0.0096315
3968253767839	396825	3767839	9.64221E-06	9.64221E-06	0	0	0	0	3.85688E-05	3.85688E-05	0	0	1.30768E-10	9.74084E-09	9.87161E-09	0.0098716
3968753767839	396875	3767839	9.75542E-06	9.75542E-06	0	0	0	0	3.90217E-05	3.90217E-05	0	0	1.32304E-10	9.85521E-09	9.98751E-09	0.0099875
3969253767839	396925	3767839	9.78484E-06	9.78484E-06	0	0	0	0	3.91394E-05	3.91394E-05	0	0	1.32703E-10	9.88493E-09	1.00176E-08	0.0100176
3969753767839	396975	3767839	9.68405E-06	9.68405E-06	0	0	0	0	3.87362E-05	3.87362E-05	0	0	1.31336E-10	9.7831E-09	9.91444E-09	0.0099144
3970253767839	397025	3767839	9.60676E-06	9.60676E-06	0	0	0	0	3.8427E-05	3.8427E-05	0	0	1.30287E-10	9.70502E-09	9.83531E-09	0.0098353
3970753767839	397075	3767839	9.81404E-06	9.81404E-06	0	0	0	0	3.92562E-05	3.92562E-05	0	0	1.33099E-10	9.91443E-09	1.00475E-08	0.0100475
3971253767839	397125	3767839	9.99446E-06	9.99446E-06	0	0	0	0	3.99778E-05	3.99778E-05	0	0	1.35545E-10	1.00967E-08	1.02322E-08	0.0102322
3971753767839	397175	3767839	9.86235E-06	9.86235E-06	0	0	0	0	3.94494E-05	3.94494E-05	0	0	1.33754E-10	9.96323E-09	1.0097E-08	0.010097
3972253767839	397225	3767839	9.48179E-06	9.48179E-06	0	0	0	0	3.79272E-05	3.79272E-05	0	0	1.28593E-10	9.57878E-09	9.70738E-09	0.0097074
3972753767839	397275	3767839	8.98205E-06	8.98205E-06	0	0	0	0	3.59282E-05	3.59282E-05	0	0	1.21815E-10	9.07392E-09	9.19574E-09	0.0091957
3973253767839	397325	3767839	8.56318E-06	8.56318E-06	0	0	0	0	3.42527E-05	3.42527E-05	0	0	1.16134E-10	8.65077E-09	8.76691E-09	0.0087669
3973753767839	397375	3767839	8.90805E-06	8.90805E-06	0	0	0	0	3.56322E-05	3.56322E-05	0	0	1.20812E-10	8.99917E-09	9.11999E-09	0.00912
3974753767839	397475	3767839	8.39684E-06	8.39684E-06	0	0	0	0	3.35873E-05	3.35873E-05	0	0	1.13878E-10	8.48273E-09	8.59661E-09	0.0085966
3975253767839	397525	3767839	7.17645E-06	7.17645E-06	0	0	0	0	2.87058E-05	2.87058E-05	0	0	9.73275E-11	7.24986E-09	7.34719E-09	0.0073472
3964253767889	396425	3767889	8.68786E-06	8.68786E-06	0	0	0	0	3.47514E-05	3.47514E-05	0	0	1.17825E-10	8.77673E-09	8.89455E-09	0.0088946
3964753767889	396475	3767889	7.72394E-06	7.72394E-06	0	0	0	0	3.08958E-05	3.08958E-05	0	0	1.04753E-10	7.80295E-09	7.9077E-09	0.0079077
3965253767889	396525	3767889	7.92693E-06	7.92693E-06	0	0	0	0	3.17077E-05	3.17077E-05	0	0	1.07506E-10	8.00802E-09	8.11552E-09	0.0081155
3965753767889	396575	3767889	8.28594E-06	8.28594E-06	0	0	0	0	3.31437E-05	3.31437E-05	0	0	1.12374E-10	8.37069E-09	8.48307E-09	0.0084831
3974753767889	397475	3767889	9.11005E-06	9.11005E-06	0	0	0	0	3.64402E-05	3.64402E-05	0	0	1.23551E-10	9.20324E-09	9.32679E-09	0.0093268
3975253767889	397525	3767889	7.91657E-06	7.91657E-06	0	0	0	0	3.16663E-05	3.16663E-05	0	0	1.07365E-10	7.99755E-09	8.10491E-09	0.0081049
3964253767939	396425	3767939	9.223E-06	9.223E-06	0	0	0	0	3.6892E-05	3.6892E-05	0	0	1.25083E-10	9.31734E-09	9.44243E-09	0.0094424
3964753767939	396475	3767939	8.29009E-06	8.29009E-06	0	0	0	0	3.31604E-05	3.31604E-05	0	0	1.12431E-10	8.37489E-09	8.48732E-09	0.0084873
3965253767939	396525	3767939	8.58704E-06	8.58704E-06	0	0	0	0	3.43482E-05	3.43482E-05	0	0	1.16458E-10	8.67488E-09	8.79133E-09	0.0087913
3974753767939	397475	3767939	9.67969E-06	9.67969E-06	0	0	0	0	3.87187E-05	3.87187E-05	0	0	1.31276E-10	9.7787E-09	9.90998E-09	0.00991
3975253767939	397525	3767939	8.84858E-06	8.84858E-06	0	0	0	0	3.53943E-05	3.53943E-05	0	0	1.20005E-10	8.93909E-09	9.05909E-09	0.0090591
3964253767989	396425	3767989	9.04835E-06	9.04835E-06	0	0	0	0	3.61934E-05	3.61934E-05	0	0	1.22714E-10	9.14091E-09	9.26362E-09	0.0092636
3964753767989	396475	3767989	9.00918E-06	9.00918E-06	0	0	0	0	3.60367E-05	3.60367E-05	0	0	1.22183E-10	9.10134E-09	9.22352E-09	0.0092235
3974753767989	397475	3767989	1.11242E-05	1.11242E-05	0	0	0	0	4.44968E-05	4.44968E-05	0	0	1.50867E-10	1.1238E-08	1.13889E-08	0.0113889
3975253767989	397525	3767989	1.00822E-05	1.00822E-05	0	0	0	0	4.03288E-05	4.03288E-05	0	0	1.36735E-10	1.01853E-08	1.03221E-08	0.0103221
3964253768039	396425	3768039	9.75461E-06	9.75461E-06	0	0	0	0	3.90184E-05	3.90184E-05	0	0	1.32293E-10	9.85439E-09	9.98668E-09	0.0099867
3964753768039	396475	3768039	1.00792E-05	1.00792E-05	0	0	0	0	4.03168E-05	4.03168E-05	0	0	1.36695E-10	1.01823E-08	1.0319E-08	0.010319
3974753768039	397475	3768039	1.48514E-05	1.48514E-05	0	0	0	0	5.94058E-05	5.94058E-05	0	0	2.01416E-10	1.50034E-08	1.52048E-08	0.0152048
3975253768039	397525	3768039	1.38974E-05	1.38974E-05	0	0	0	0	5.55896E-05	5.55896E-05	0	0	1.88477E-10	1.40396E-08	1.4228E-08	0.014228
3964253768089	396425	3768089	1.07571E-05	1.07571E-05	0	0	0	0	4.30282E-05	4.30282E-05	0	0	1.45888E-10	1.08671E-08	1.1013E-08	0.011013
3964753768089	396475	3768089	1.13061E-05	1.13061E-05	0	0	0	0	4.52245E-05	4.52245E-05	0	0	1.53334E-10	1.14218E-08	1.15751E-08	0.0115751
3974753768089	397475	3768089	1.99899E-05	1.99899E-05	0	0	0	0	7.99597E-05	7.99597E-05	0	0	2.71104E-10	2.01944E-08	2.04655E-08	0.0204655
3975253768089	397525	3768089	1.841E-05	1.841E-05	0	0	0	0	7.36401E-05	7.36401E-05	0	0	2.49678E-10	1.85983E-08	1.8848E-08	0.018848
3964253768139	396425	3768139	1.33947E-05	1.33947E-05	0	0	0	0	5.35788E-05	5.35788E-05	0	0	1.8166E-10	1.35317E-08	1.37134E-08	0.0137134
3964753768139	396475	3768139	1.23382E-05	1.23382E-05	0	0	0	0	4.93528E-05	4.93528E-05	0	0	1.67331E-10	1.24644E-08	1.26317E-08	0.0126317
3974253768139	397425	3768139	4.24084E-05	4.24084E-05	0	0	0	0	0.000169634	0.000169634	0	0	5.75145E-10	4.28422E-08	4.34174E-08	0.0434174
3974753768139	397475	3768139	3.07235E-05	3.07235E-05	0	0	0	0	0.000122894	0.000122894	0	0	4.16674E-10	3.10378E-08	3.14544E-08	0.0314544
3975253768139	397525	3768139	2.31816E-05	2.31816E-05	0	0	0	0	9.27263E-05	9.27263E-05	0	0	3.1439E-10	2.34187E-08	2.37331E-08	0.0237331
3964253768189	396425	3768189	1.44308E-05	1.44308E-05	0	0	0	0	5.77234E-05	5.77234E-05	0	0	1.95712E-10	1.45785E-08	1.47742E-08	0.0147742
3964753768189	396475	3768189	1.35066E-05	1.35066E-05	0	0	0	0	5.40263E-05	5.40263E-05	0	0	1.83177E-10	1.36447E-08	1.38279E-08	0.0138279
3973753768189	397375	3768189	0.000251374	0.000251374	0	0	0	0	0.001005496	0.001005496	0	0	3.40915E-09	2.53945E-07	2.57354E-07	0.2573544

Garvey Reservoir Rehab - Mitigated Reservoir Cover and Liner Work			Demolition - 2025	Demolition - 2026	Site Preparation - 2025	ite Preparation - 202	Grading - 2025	Grading - 2026	Infrastructure - 2025	nfrastructure - 2026	Paving - 2025	rchitectural Coating - 202	Child Risk			
Unique Identifier	X (UTM)	Y (UTM)	2025	2026	1900	1900	1900	1900	2026	2027	1900	1900	3rd Trimester	0<2	Total	per million
3974253768189	397425	3768189	7.26092E-05	7.26092E-05	0	0	0	0	0.000290437	0.000290437	0	0	9.8473E-10	7.33519E-08	7.43366E-08	0.0743366
3974753768189	397475	3768189	4.16037E-05	4.16037E-05	0	0	0	0	0.000166415	0.000166415	0	0	5.64232E-10	4.20293E-08	4.25935E-08	0.0425935
3975253768189	397525	3768189	2.86451E-05	2.86451E-05	0	0	0	0	0.000114581	0.000114581	0	0	3.88487E-10	2.89381E-08	2.93266E-08	0.0293266
3964253768239	396425	3768239	1.56187E-05	1.56187E-05	0	0	0	0	6.24749E-05	6.24749E-05	0	0	2.11822E-10	1.57785E-08	1.59903E-08	0.0159903
3964753768239	396475	3768239	1.49348E-05	1.49348E-05	0	0	0	0	5.97394E-05	5.97394E-05	0	0	2.02547E-10	1.50876E-08	1.52902E-08	0.0152902
3973753768239	397375	3768239	0.000366194	0.000366194	0	0	0	0	0.001464777	0.001464777	0	0	4.96635E-09	3.6994E-07	3.74906E-07	0.3749064
3974253768239	397425	3768239	9.31217E-05	9.31217E-05	0	0	0	0	0.000372487	0.000372487	0	0	1.26292E-09	9.40742E-08	9.53372E-08	0.0953372
3974753768239	397475	3768239	5.02084E-05	5.02084E-05	0	0	0	0	0.000200833	0.000200833	0	0	6.80929E-10	5.07219E-08	5.14029E-08	0.0514029
3975253768239	397525	3768239	3.40586E-05	3.40586E-05	0	0	0	0	0.000136234	0.000136234	0	0	4.61904E-10	3.4407E-08	3.48689E-08	0.0348689
3964253768289	396425	3768289	1.67187E-05	1.67187E-05	0	0	0	0	6.68749E-05	6.68749E-05	0	0	2.2674E-10	1.68897E-08	1.71165E-08	0.0171165
3964753768289	396475	3768289	1.66394E-05	1.66394E-05	0	0	0	0	6.65577E-05	6.65577E-05	0	0	2.25665E-10	1.68096E-08	1.70353E-08	0.0170353
3973253768289	397325	3768289	0.000970128	0.000970128	0	0	0	0	0.00388051	0.00388051	0	0	1.31569E-08	9.80051E-07	9.93208E-07	0.9932078
3973753768289	397375	3768289	0.000256808	0.000256808	0	0	0	0	0.001027231	0.001027231	0	0	3.48284E-09	2.59435E-07	2.62917E-07	0.2629174
3974253768289	397425	3768289	0.000113184	0.000113184	0	0	0	0	0.000452735	0.000452735	0	0	1.53501E-09	1.14342E-07	1.15877E-07	0.1158766
3974753768289	397475	3768289	6.23968E-05	6.23968E-05	0	0	0	0	0.000249587	0.000249587	0	0	8.46228E-10	6.3035E-08	6.38812E-08	0.0638812
3975253768289	397525	3768289	4.04861E-05	4.04861E-05	0	0	0	0	0.000161944	0.000161944	0	0	5.49075E-10	4.09002E-08	4.14493E-08	0.0414493
3964253768339	396425	3768339	1.89441E-05	1.89441E-05	0	0	0	0	7.57765E-05	7.57765E-05	0	0	2.56921E-10	1.91379E-08	1.93948E-08	0.0193948
3964753768339	396475	3768339	1.88028E-05	1.88028E-05	0	0	0	0	7.52111E-05	7.52111E-05	0	0	2.55004E-10	1.89951E-08	1.92501E-08	0.0192501
3965253768339	396525	3768339	2.00438E-05	2.00438E-05	0	0	0	0	8.01753E-05	8.01753E-05	0	0	2.71835E-10	2.02489E-08	2.05207E-08	0.0205207
3972753768339	397275	3768339	0.000788164	0.000788164	0	0	0	0	0.003152655	0.003152655	0	0	1.06891E-08	7.96226E-07	8.06915E-07	0.806915
3973253768339	397325	3768339	0.000581036	0.000581036	0	0	0	0	0.002324144	0.002324144	0	0	7.88004E-09	5.86979E-07	5.94859E-07	0.5948594
3973753768339	397375	3768339	0.00021402	0.00021402	0	0	0	0	0.000856082	0.000856082	0	0	2.90256E-09	2.1621E-07	2.19112E-07	0.2191122
3974253768339	397425	3768339	0.000112533	0.000112533	0	0	0	0	0.000450133	0.000450133	0	0	1.52618E-09	1.13684E-07	1.1521E-07	0.1152105
3974753768339	397475	3768339	6.76729E-05	6.76729E-05	0	0	0	0	0.000270692	0.000270692	0	0	9.17783E-10	6.83651E-08	6.92829E-08	0.0692829
3975253768339	397525	3768339	4.496E-05	4.496E-05	0	0	0	0	0.00017984	0.00017984	0	0	6.0975E-10	4.54199E-08	4.60296E-08	0.0460296
3964253768389	396425	3768389	2.10518E-05	2.10518E-05	0	0	0	0	8.42071E-05	8.42071E-05	0	0	2.85505E-10	2.12671E-08	2.15526E-08	0.0215526
3964753768389	396475	3768389	2.14284E-05	2.14284E-05	0	0	0	0	8.57137E-05	8.57137E-05	0	0	2.90614E-10	2.16476E-08	2.19382E-08	0.0219382
3965253768389	396525	3768389	2.24599E-05	2.24599E-05	0	0	0	0	8.98394E-05	8.98394E-05	0	0	3.04602E-10	2.26896E-08	2.29942E-08	0.0229942
3972253768389	397225	3768389	0.000189473	0.000189473	0	0	0	0	0.000757892	0.000757892	0	0	2.56964E-09	1.91411E-07	1.93981E-07	0.1939808
3972753768389	397275	3768389	0.000750467	0.000750467	0	0	0	0	0.003001867	0.003001867	0	0	1.01779E-08	7.58143E-07	7.68321E-07	0.7683212
3973253768389	397325	3768389	0.00058123	0.00058123	0	0	0	0	0.002324919	0.002324919	0	0	7.88267E-09	5.87175E-07	5.95058E-07	0.5950578
3973753768389	397375	3768389	0.000206027	0.000206027	0	0	0	0	0.000824108	0.000824108	0	0	2.79415E-09	2.08134E-07	2.10929E-07	0.2109286
3974253768389	397425	3768389	0.000112723	0.000112723	0	0	0	0	0.000450894	0.000450894	0	0	1.52876E-09	1.13877E-07	1.15405E-07	0.1154053
3974753768389	397475	3768389	7.12803E-05	7.12803E-05	0	0	0	0	0.000285121	0.000285121	0	0	9.66707E-10	7.20094E-08	7.29761E-08	0.0729761
3975253768389	397525	3768389	4.89604E-05	4.89604E-05	0	0	0	0	0.000195842	0.000195842	0	0	6.64004E-10	4.94612E-08	5.01252E-08	0.0501252
3964253768439	396425	3768439	2.38928E-05	2.38928E-05	0	0	0	0	9.55711E-05	9.55711E-05	0	0	3.24035E-10	2.41372E-08	2.44612E-08	0.0244612
3964753768439	396475	3768439	2.46051E-05	2.46051E-05	0	0	0	0	9.84203E-05	9.84203E-05	0	0	3.33695E-10	2.48568E-08	2.51905E-08	0.0251905
3965253768439	396525	3768439	2.54921E-05	2.54921E-05	0	0	0	0	0.000101968	0.000101968	0	0	3.45725E-10	2.57528E-08	2.60985E-08	0.0260985
3971753768439	397175	3768439	0.000102075	0.000102075	0	0	0	0	0.000408302	0.000408302	0	0	1.38435E-09	1.0312E-07	1.04504E-07	0.1045039
3972253768439	397225	3768439	0.000198768	0.000198768	0	0	0	0	0.000795073	0.000795073	0	0	2.69571E-09	2.00801E-07	2.03497E-07	0.2034972
3972753768439	397275	3768439	0.000754179	0.000754179	0	0	0	0	0.003016715	0.003016715	0	0	1.02282E-08	7.61893E-07	7.72122E-07	0.7721215
3973253768439	397325	3768439	0.000567481	0.000567481	0	0	0	0	0.002269924	0.002269924	0	0	7.69621E-09	5.73286E-07	5.80982E-07	0.580982
3973753768439	397375	3768439	0.000190445	0.000190445	0	0	0	0	0.000761778	0.000761778	0	0	2.58282E-09	1.92393E-07	1.94975E-07	0.1949755
3974253768439	397425	3768439	0.000104214	0.000104214	0	0	0	0	0.000416855	0.000416855	0	0	1.41335E-09	1.0528E-07	1.06693E-07	0.1066931
3974753768439	397475	3768439	7.37959E-05	7.37959E-05	0	0	0	0	0.000295184	0.000295184	0	0	1.00082E-09	7.45507E-08	7.55516E-08	0.0755516
3975253768439	397525	3768439	5.18253E-05	5.18253E-05	0	0	0	0	0.000207301	0.000207301	0	0	7.02858E-10	5.23555E-08	5.30583E-08	0.0530583
3964253768489	396425	3768489	2.72532E-05	2.72532E-05	0	0	0	0	0.000109013	0.000109013	0	0	3.6961E-10	2.7532E-08	2.79016E-08	0.0279016
3964753768489	396475	3768489	2.8417E-05	2.8417E-05	0	0	0	0	0.000113668	0.000113668	0	0	3.85394E-10	2.87077E-08	2.90931E-08	0.0290931
3965253768489	396525	3768489	2.95221E-05	2.95221E-05	0	0	0	0	0.000118088	0.000118088	0	0	4.00381E-10	2.98241E-08	3.02245E-08	0.0302245
3970753768489	397075	3768489	5.81399E-05	5.81399E-05	0	0	0	0	0.00023256	0.00023256	0	0	7.88496E-10	5.87346E-08	5.95231E-08	0.0595231
3971253768489	397125	3768489	7.3862E-05	7.3862E-05	0	0	0	0	0.000295448	0.000295448	0	0	1.00172E-09	7.46176E-08	7.56193E-08	0.0756193
3971753768489	397175	3768489	0.000106825	0.000106825	0	0	0	0	0.000427298	0.000427298	0	0	1.44876E-09	1.07917E-07	1.09366E-07	0.109366
3972253768489	397225	3768489	0.000197614	0.000197614	0	0	0	0	0.000790455	0.000790455	0	0	2.68005E-09	1.99635E-07	2.02315E-07	0.2023152
3972753768489	397275	3768489	0.000740434	0.000740434	0	0	0	0	0.002961738	0.002961738	0	0	1.00418E-08	7.48008E-07	7.5805E-07	0.7580502
3973253768489	397325	3768489	0.000489762	0.000489762	0	0	0	0	0.001959049	0.001959049	0	0	6.64218E-09	4.94772E-07	5.01414E-07	0.5014142
3973753768489	397375	3768489	0.000187596	0.000187596	0	0	0	0	0.000750383	0.000750383	0	0	2.54418E-09	1.89515E-07	1.92059E-07	0.1920588
3974253768489	397425	3768489	0.000103543	0.000103543	0	0	0	0	0.000414174	0.000414174	0	0	1.40426E-09	1.04603E-07	1.06007E-07	0.1060069
3974753768489	397475	3768489	6.45349E-05	6.45349E-05	0	0	0	0	0.00025814	0.00025814	0	0	8.75226E-10	6.5195E-08	6.60702E-08	0.0660702
3975253768489	397525	3768489	4.67519E-05	4.67519E-05	0	0	0	0	0.000187008	0.000187008	0	0	6.34052E-10	4.72302E-08	4.78642E-08	0.0478642
3964253768539	396425	3768539	3.16938E-05	3.16938E-05	0	0	0	0	0.000126775	0.000126775	0	0	4.29834E-10	3.2018E-08	3.24479E-08	0.0324479
3964753768539	396475	3768539	3.34216E-05	3.34216E-05	0	0	0	0	0.000133687	0.000133687	0	0	4.53266E-10	3.37635E-08	3.42168E-08	0.0342168
3965253768539	396525	3768539	3.45357E-05	3.45357E-05	0	0	0	0	0.000138143	0.000138143	0	0	4.68375E-10	3.48889E-08	3.53573E-08	0.0353573
3965753768539	396575	3768539	3.32369E-05	3.32369E-05	0	0	0	0	0.000132948	0.000132948	0	0	4.50761E-10	3.35769E-08	3.40277E-08	0.0340277
3970253768539	397025	3768539	5.49967E-05	5.49967E-05	0	0	0	0	0.000219987	0.000219987	0	0	7.45868E-10	5.55592E-08	5.63051E-08	0.0563051
3970753768539	397075	3768539	6.43527E-05	6.43527E-05	0	0	0	0	0.000257411	0.000257411	0	0	8.72754E-10	6.50109E-08	6.58837E-08	0.0658837
3971253768539	397125	3768539	8.08591E-05	8.08591E-05	0	0	0	0	0.000323436	0.000323436	0	0	1.09662E-09	8.16862E-08	8.27828E-08	0.0827828
3971753768539	397175	3768539	0.000115452	0.000115452	0	0	0	0	0.000461808	0.000461808	0	0	1.56577E-09	1.16633E-07	1.18199E-07	0.1181987
3972253768539	397225	3768539	0.000202489	0.000202489	0	0	0	0	0.000809956	0.000809956	0	0	2.74617E-09	2.0456E-07	2.07307E-07	0.2073065
3972753768539	397275	3768539	0.000674464	0.000674464	0	0	0	0	0.002697856	0.002697856	0	0	9.14712E-09	6.81363E-07	6.9051E-07	0.6905102
3973253768539	397325	3768539	0.000472319	0.000472319	0	0	0	0	0.001889275	0.001889275	0	0	6.40562E-09	4.7715E-07	4.83556E-07	0.4835558
3973753768539	397375	3768539	0.000188947	0.000188947	0	0	0	0	0.000755788	0.000755788	0	0	2.56251E-09	1.9088E-07	1.93442E-07	0.1934423

Garvey Reservoir Rehab - Mitigated Reservoir Cover and Liner Work			Demolition - 2025	Demolition - 2026	Site Preparation - 2025	te Preparation - 202	Grading - 2025	Grading - 2026	Infrastructure - 2025	nfrastructure - 2026	Paving - 2025	rchitectural Coating - 202	Child Risk			
Unique Identifier	X (UTM)	Y (UTM)	2025	2026	1900	1900	1900	1900	2026	2027	1900	1900	3rd Trimester	0<2	Total	per million
3974253768539	397425	3768539	0.000101197	0.000101197	0	0	0	0	0.000404789	0.000404789	0	0	1.37244E-09	1.02232E-07	1.03605E-07	0.1036048
3974753768539	397475	3768539	6.5278E-05	6.5278E-05	0	0	0	0	0.000261112	0.000261112	0	0	8.85304E-10	6.59458E-08	6.68311E-08	0.0668311
3975253768539	397525	3768539	4.64848E-05	4.64848E-05	0	0	0	0	0.000185939	0.000185939	0	0	6.3043E-10	4.69603E-08	4.75908E-08	0.0475908
3964253768589	396425	3768589	3.69868E-05	3.69868E-05	0	0	0	0	0.000147947	0.000147947	0	0	5.01617E-10	3.73651E-08	3.78668E-08	0.0378668
3964753768589	396475	3768589	4.01359E-05	4.01359E-05	0	0	0	0	0.000160543	0.000160543	0	0	5.44325E-10	4.05464E-08	4.10907E-08	0.0410907
3965253768589	396525	3768589	3.99925E-05	3.99925E-05	0	0	0	0	0.00015997	0.00015997	0	0	5.42381E-10	4.04016E-08	4.0944E-08	0.040944
3965753768589	396575	3768589	3.85848E-05	3.85848E-05	0	0	0	0	0.000154339	0.000154339	0	0	5.23289E-10	3.89795E-08	3.95028E-08	0.0395028
3966253768589	396625	3768589	3.8145E-05	3.8145E-05	0	0	0	0	0.00015258	0.00015258	0	0	5.17324E-10	3.85352E-08	3.90525E-08	0.0390525
3968253768589	396825	3768589	4.69972E-05	4.69972E-05	0	0	0	0	0.000187989	0.000187989	0	0	6.37379E-10	4.74779E-08	4.81153E-08	0.0481153
3968753768589	396875	3768589	4.98163E-05	4.98163E-05	0	0	0	0	0.000199265	0.000199265	0	0	6.75611E-10	5.03258E-08	5.10014E-08	0.0510014
3969253768589	396925	3768589	5.41098E-05	5.41098E-05	0	0	0	0	0.000216439	0.000216439	0	0	7.3384E-10	5.46633E-08	5.53971E-08	0.0553971
3969753768589	396975	3768589	5.80856E-05	5.80856E-05	0	0	0	0	0.000232343	0.000232343	0	0	7.87761E-10	5.86798E-08	5.94675E-08	0.0594675
3970253768589	397025	3768589	6.38991E-05	6.38991E-05	0	0	0	0	0.000255596	0.000255596	0	0	8.66603E-10	6.45527E-08	6.54193E-08	0.0654193
3970753768589	397075	3768589	7.2588E-05	7.2588E-05	0	0	0	0	0.000290352	0.000290352	0	0	9.84443E-10	7.33305E-08	7.43149E-08	0.0743149
3971253768589	397125	3768589	9.11865E-05	9.11865E-05	0	0	0	0	0.000364746	0.000364746	0	0	1.23668E-09	9.21192E-08	9.33559E-08	0.0933559
3971753768589	397175	3768589	0.000129253	0.000129253	0	0	0	0	0.000517011	0.000517011	0	0	1.75293E-09	1.30575E-07	1.32328E-07	0.1323279
3972253768589	397225	3768589	0.000226062	0.000226062	0	0	0	0	0.000904247	0.000904247	0	0	3.06586E-09	2.28374E-07	2.3144E-07	0.23144
3972753768589	397275	3768589	0.000720408	0.000720408	0	0	0	0	0.002881634	0.002881634	0	0	9.77022E-09	7.27778E-07	7.37548E-07	0.7375477
3973253768589	397325	3768589	0.000469065	0.000469065	0	0	0	0	0.001876262	0.001876262	0	0	6.36149E-09	4.73863E-07	4.80225E-07	0.480225
3973753768589	397375	3768589	0.000188904	0.000188904	0	0	0	0	0.000755614	0.000755614	0	0	2.56192E-09	1.90836E-07	1.93398E-07	0.1933977
3974253768589	397425	3768589	9.82419E-05	9.82419E-05	0	0	0	0	0.000392968	0.000392968	0	0	1.33236E-09	9.92468E-08	1.00579E-07	0.1005792
3974753768589	397475	3768589	6.48067E-05	6.48067E-05	0	0	0	0	0.000259227	0.000259227	0	0	8.78913E-10	6.54696E-08	6.63486E-08	0.0663486
3975253768589	397525	3768589	4.6876E-05	4.6876E-05	0	0	0	0	0.000187504	0.000187504	0	0	6.35735E-10	4.73555E-08	4.79913E-08	0.0479913
3964253768639	396425	3768639	4.45817E-05	4.45817E-05	0	0	0	0	0.000178327	0.000178327	0	0	6.0462E-10	4.50377E-08	4.56423E-08	0.0456423
3964753768639	396475	3768639	5.04824E-05	5.04824E-05	0	0	0	0	0.00020193	0.00020193	0	0	6.84646E-10	5.09988E-08	5.16835E-08	0.0516835
3965253768639	396525	3768639	4.74389E-05	4.74389E-05	0	0	0	0	0.000189756	0.000189756	0	0	6.43369E-10	4.79242E-08	4.85675E-08	0.0485675
3965753768639	396575	3768639	4.7726E-05	4.7726E-05	0	0	0	0	0.000190904	0.000190904	0	0	6.47263E-10	4.82142E-08	4.88615E-08	0.0488615
3966253768639	396625	3768639	4.8578E-05	4.8578E-05	0	0	0	0	0.000194312	0.000194312	0	0	6.58818E-10	4.90749E-08	4.97337E-08	0.0497337
3966753768639	396675	3768639	4.95918E-05	4.95918E-05	0	0	0	0	0.000198367	0.000198367	0	0	6.72566E-10	5.0099E-08	5.07716E-08	0.0507716
3967253768639	396725	3768639	5.11221E-05	5.11221E-05	0	0	0	0	0.000204489	0.000204489	0	0	6.93321E-10	5.16451E-08	5.23384E-08	0.0523384
3967753768639	396775	3768639	5.38951E-05	5.38951E-05	0	0	0	0	0.00021558	0.00021558	0	0	7.30928E-10	5.44464E-08	5.51773E-08	0.0551773
3968253768639	396825	3768639	5.6558E-05	5.6558E-05	0	0	0	0	0.000226232	0.000226232	0	0	7.67043E-10	5.71365E-08	5.79036E-08	0.0579036
3968753768639	396875	3768639	6.06448E-05	6.06448E-05	0	0	0	0	0.000242579	0.000242579	0	0	8.22468E-10	6.12651E-08	6.20876E-08	0.0620876
3969253768639	396925	3768639	6.52452E-05	6.52452E-05	0	0	0	0	0.000260981	0.000260981	0	0	8.84859E-10	6.59126E-08	6.67974E-08	0.0667974
3969753768639	396975	3768639	6.93001E-05	6.93001E-05	0	0	0	0	0.0002772	0.0002772	0	0	9.39852E-10	7.0009E-08	7.09488E-08	0.0709488
3970253768639	397025	3768639	7.47681E-05	7.47681E-05	0	0	0	0	0.000299072	0.000299072	0	0	1.01401E-09	7.55329E-08	7.65469E-08	0.0765469
3970753768639	397075	3768639	8.29754E-05	8.29754E-05	0	0	0	0	0.000331902	0.000331902	0	0	1.12532E-09	8.38241E-08	8.49495E-08	0.0849495
3971253768639	397125	3768639	9.97722E-05	9.97722E-05	0	0	0	0	0.000399089	0.000399089	0	0	1.35312E-09	1.00793E-07	1.02146E-07	0.1021459
3971753768639	397175	3768639	0.000145964	0.000145964	0	0	0	0	0.000583854	0.000583854	0	0	1.97957E-09	1.47457E-07	1.49436E-07	0.1494361
3972253768639	397225	3768639	0.000287662	0.000287662	0	0	0	0	0.001150647	0.001150647	0	0	3.90129E-09	2.90604E-07	2.94506E-07	0.2945055
3972753768639	397275	3768639	0.001002035	0.001002035	0	0	0	0	0.004008139	0.004008139	0	0	1.35897E-08	1.01228E-06	1.02587E-06	1.0258741
3973253768639	397325	3768639	0.000422525	0.000422525	0	0	0	0	0.0016901	0.0016901	0	0	5.73031E-09	4.26847E-07	4.32577E-07	0.4325773
3973753768639	397375	3768639	0.000186159	0.000186159	0	0	0	0	0.000744636	0.000744636	0	0	2.5247E-09	1.88063E-07	1.90588E-07	0.1905879
3974253768639	397425	3768639	0.000108512	0.000108512	0	0	0	0	0.000434048	0.000434048	0	0	1.47165E-09	1.09622E-07	1.11094E-07	0.1110937
3974753768639	397475	3768639	6.44145E-05	6.44145E-05	0	0	0	0	0.000257658	0.000257658	0	0	8.73594E-10	6.50734E-08	6.5947E-08	0.065947
3975253768639	397525	3768639	4.7333E-05	4.7333E-05	0	0	0	0	0.000189332	0.000189332	0	0	6.41933E-10	4.78172E-08	4.84591E-08	0.0484591
3964253768689	396425	3768689	5.74646E-05	5.74646E-05	0	0	0	0	0.000229859	0.000229859	0	0	7.79339E-10	5.80524E-08	5.88318E-08	0.0588318
3964753768689	396475	3768689	6.81666E-05	6.81666E-05	0	0	0	0	0.000272667	0.000272667	0	0	9.2448E-10	6.88639E-08	6.97884E-08	0.0697884
3965253768689	396525	3768689	7.07517E-05	7.07517E-05	0	0	0	0	0.000283007	0.000283007	0	0	9.59539E-10	7.14754E-08	7.2435E-08	0.072435
3965753768689	396575	3768689	6.95382E-05	6.95382E-05	0	0	0	0	0.000278153	0.000278153	0	0	9.43081E-10	7.02495E-08	7.11926E-08	0.0711926
3966253768689	396625	3768689	7.03557E-05	7.03557E-05	0	0	0	0	0.000281423	0.000281423	0	0	9.54168E-10	7.10753E-08	7.20295E-08	0.0720295
3966753768689	396675	3768689	6.98859E-05	6.98859E-05	0	0	0	0	0.000279543	0.000279543	0	0	9.47796E-10	7.06007E-08	7.15485E-08	0.0715485
3967253768689	396725	3768689	7.10507E-05	7.10507E-05	0	0	0	0	0.000284203	0.000284203	0	0	9.63593E-10	7.17775E-08	7.27411E-08	0.0727411
3967753768689	396775	3768689	7.20714E-05	7.20714E-05	0	0	0	0	0.000288285	0.000288285	0	0	9.77436E-10	7.28086E-08	7.3786E-08	0.073786
3968253768689	396825	3768689	7.59723E-05	7.59723E-05	0	0	0	0	0.000303889	0.000303889	0	0	1.03034E-09	7.67494E-08	7.77797E-08	0.0777797
3968753768689	396875	3768689	8.00195E-05	8.00195E-05	0	0	0	0	0.000320078	0.000320078	0	0	1.08523E-09	8.0838E-08	8.19232E-08	0.0819232
3969253768689	396925	3768689	8.34748E-05	8.34748E-05	0	0	0	0	0.000333899	0.000333899	0	0	1.13209E-09	8.43286E-08	8.54607E-08	0.0854607
3969753768689	396975	3768689	8.70377E-05	8.70377E-05	0	0	0	0	0.000348151	0.000348151	0	0	1.18041E-09	8.7928E-08	8.91084E-08	0.0891084
3970253768689	397025	3768689	9.20079E-05	9.20079E-05	0	0	0	0	0.000368032	0.000368032	0	0	1.24782E-09	9.29491E-08	9.41969E-08	0.0941969
3970753768689	397075	3768689	0.000100925	0.000100925	0	0	0	0	0.000403699	0.000403699	0	0	1.36875E-09	1.01957E-07	1.03326E-07	0.1033258
3971253768689	397125	3768689	0.000117858	0.000117858	0	0	0	0	0.000471432	0.000471432	0	0	1.5984E-09	1.19064E-07	1.20662E-07	0.120662
3971753768689	397175	3768689	0.000164349	0.000164349	0	0	0	0	0.000657395	0.000657395	0	0	2.22891E-09	1.6603E-07	1.68259E-07	0.1682589
3972253768689	397225	3768689	0.000372703	0.000372703	0	0	0	0	0.001490811	0.001490811	0	0	5.05461E-09	3.76515E-07	3.8157E-07	0.3815696
3972753768689	397275	3768689	0.001023715	0.001023715	0	0	0	0	0.00409486	0.00409486	0	0	1.38837E-08	1.03419E-06	1.04807E-06	1.0480703
3973253768689	397325	3768689	0.000342623	0.000342623	0	0	0	0	0.001370494	0.001370494	0	0	4.64668E-09	3.46128E-07	3.50775E-07	0.3507748
3973753768689	397375	3768689	0.000173454	0.000173454	0	0	0	0	0.000693814	0.000693814	0	0	2.35239E-09	1.75228E-07	1.7758E-07	0.1775802
3974253768689	397425	3768689	0.000108349	0.000108349	0	0	0	0	0.000433395	0.000433395	0	0	1.46943E-09	1.09457E-07	1.10926E-07	0.1109264
3974753768689	397475	3768689	7.39421E-05	7.39421E-05	0	0	0	0	0.000295768	0.000295768	0	0	1.00281E-09	7.46984E-08	7.57012E-08	0.0757012
3975253768689	397525	3768689	5.3666E-05	5.3666E-05	0	0	0	0	0.000214664	0.000214664	0	0	7.27821E-10	5.4215E-08	5.49428E-08	0.0549428

Garvey Reservoir Rehab - Mitigated Reservoir Cover and Liner Work

Maximum Individual Non-Cancer Impact Calculations - Sensitive Receptors (Maximum Impacted Senior Residential Receptor) (IMPACT AT ALL OTHER LOCATIONS ON THE PROJECT SITE WOULD BE LESS THAN SHOWN)

Maximum Non-cancer Chronic Hazards / Toxicological Endpoints*

Receptor Group	Pollutant	CREL[1]	CONC	WFrac	$CONC_{WF}$	HI		ALIM	BN	CVS	DEV	ENDC	EYE	HEM	IMMUN	KIDN	NS	REPRO	RESP	SK
Project:																				
MEI - Max	DPM	5.00E+00	5.54E-03	1.00E+00	5.54E-03	0.001		-	-	-	-	-	-	-	-	-	-	-	1.11E-03	-
							Total Risk				-			-				-	0.001	
							Threshold				1.00			1.00				1.00	1.00	
							Over?				NO			NO				NO	NO	

Notes:

1. California Air Resources Board, "Consolidated Table of OEHHA/ARB Approved Risk Assessment Health Values," "OEHHA/ARB Approved Chronic Reference Exposure Levels and Target Organs," "OEHHA/ARB Approved Acute Reference Exposure Levels and Target Organs," and "OEHHA/ARB Approved 8-Hour Reference Exposure Levels and Target Organs," http://www.arb.ca.gov/toxics/healthval/healthval.htm. Tables last updated: May 8, 2018. Downloaded: 08/14/18.

Source: ESA, 2020

Where:

$CONC_{WF}$	Pollutant Concentration ($\mu g/m^3$) multiplied by the weight fraction
CREL	Chronic Reference Exposure Level
HI	Hazard Index
MEI	Maximally Exposed Individual
WFrac	Weight fraction of speciated component

* Key to Toxicological Endpoints

ALIM	Alimentary Tract	EYE	Eye	NS	Nervous System
BN	Bone	HEM	Hematologic System	REPRO	Reproductive System
CVS	Cardiovascular System	IMMUN	Immune System	RESP	Respiratory System
DEV	Developmental System	KIDN	Kidney	SK	Skin
ENDC	Endocrine System				

I/O Tower

Garvey Reservoir Rehab - Unmitigated I/O Tower

Cancer Risk Summary & Maximum Annual GLC for Chronic Calculations

Cancer Risk Summary

Max Risk: 10.59739

XY	X	Y	Offroad Risk	Haul Risk	Total Risk
7449041451	574490	4145130	0.097423414	0.000365624	0.097789
7448041451	574480	4145140	0.107709109	0.000373913	0.108083
7449041451	574490	4145140	0.123160011	0.00038912	0.123549
7449041451	574490	4145150	0.138253149	0.000399258	0.138652
7450041451	574500	4145150	0.156208394	0.000437697	0.156646
7446041451	574460	4145160	0.168417066	0.000413818	0.168831
7449041451	574490	4145160	0.176265498	0.000412195	0.176678
7450041451	574500	4145160	0.18406921	0.000412556	0.184482
7451041451	574510	4145160	0.195472914	0.000418015	0.195891
7446041451	574460	4145170	0.201935014	0.000407473	0.202342
7447041451	574470	4145170	0.200347439	0.0004019	0.200749
7448041451	574480	4145170	0.192946211	0.000402385	0.193349
7449041451	574490	4145170	0.190106465	0.000384042	0.190491
7450041451	574500	4145170	0.183778527	0.000345737	0.184124
7451041451	574510	4145170	0.170809608	0.000340078	0.17115
7452041451	574520	4145170	0.156700318	0.000330096	0.15703
7446041451	574460	4145180	0.138588552	0.000340671	0.138929
7447041451	574470	4145180	0.124322741	0.000324491	0.124647
7448041451	574480	4145180	0.10455632	0.00042075	0.104977
7449041451	574490	4145180	0.115289218	0.000411118	0.1157
7450041451	574500	4145180	0.134943839	0.000433124	0.135377
7451041451	574510	4145180	0.155850631	0.00047438	0.156325
7452041451	574520	4145180	0.177964874	0.000480826	0.178446
7453041451	574530	4145180	0.197977257	0.000466864	0.198444
7445041451	574450	4145190	0.215843061	0.000470516	0.216314
7446041451	574460	4145190	0.231629366	0.000473263	0.232103
7447041451	574470	4145190	0.250121256	0.000480309	0.250602
7448041451	574480	4145190	0.262061606	0.000471078	0.262533
7449041451	574490	4145190	0.26253117	0.000456242	0.262987
7450041451	574500	4145190	0.253072803	0.000457749	0.253531
7451041451	574510	4145190	0.243033071	0.000443979	0.243477
7452041451	574520	4145190	0.232389613	0.00040045	0.23279
7444041452	574440	4145200	0.212757353	0.00037977	0.213137
7445041452	574450	4145200	0.189972304	0.000371441	0.190344
7446041452	574460	4145200	0.167477937	0.000362619	0.167841
7447041452	574470	4145200	0.14701835	0.000348985	0.147367
7448041452	574480	4145200	0.109207242	0.000443525	0.109651
7449041452	574490	4145200	0.123450693	0.000455939	0.123907
7450041452	574500	4145200	0.144200964	0.000476851	0.144678
7451041452	574510	4145200	0.170966129	0.000506344	0.171472
7443041452	574430	4145210	0.203298986	0.000562461	0.203861
7444041452	574440	4145210	0.238896433	0.00057112	0.239468
7445041452	574450	4145210	0.263045455	0.00053855	0.263584
7446041452	574460	4145210	0.300096315	0.000552129	0.300648
7447041452	574470	4145210	0.329567065	0.00055968	0.330127
7448041452	574480	4145210	0.350093734	0.000559815	0.350654
7449041452	574490	4145210	0.359015456	0.000539159	0.359555
7450041452	574500	4145210	0.347745912	0.000532011	0.348278
7451041452	574510	4145210	0.326682599	0.000518752	0.327201
7443041452	574430	4145220	0.306401893	0.0004621	0.306864
7444041452	574440	4145220	0.271676494	0.000435873	0.272112
7445041452	574450	4145220	0.235743644	0.000412165	0.236156
7446041452	574460	4145220	0.201621971	0.000396497	0.202018
7447041452	574470	4145220	0.172307742	0.00037692	0.172685
7448041452	574480	4145220	0.114953815	0.000537011	0.115491
7449041452	574490	4145220	0.131388566	0.000508091	0.131897
7450041452	574500	4145220	0.155984792	0.000541417	0.156526
7451041452	574510	4145220	0.189189697	0.000640396	0.18983
7452041452	574520	4145220	0.228677819	0.000646205	0.229324
7453041452	574530	4145220	0.268680226	0.000605334	0.269286
7444041452	574440	4145230	0.328426695	0.000630171	0.329057
7445041452	574450	4145230	0.402997979	0.000665582	0.403664

Max GLC for Chronic Calcs

Max GLC: 0.118173

XY	X	Y	2025	2026	2027	2034	2035
57449041451	574490	4145130	0.0003936	0.0010908	0		
57448041451	574480	4145140	0.0004348	0.0012056	0		
57449041451	574490	4145140	0.0004968	0.0013782	0		
57449041451	574490	4145150	0.0005573	0.0015467	0		
57450041451	574500	4145150	0.0006295	0.0017474	0		
57446041451	574460	4145160	0.0006781	0.0018834	0		
57449041451	574490	4145160	0.0007095	0.0019709	0		
57450041451	574500	4145160	0.0007407	0.002058	0		
57451041451	574510	4145160	0.0007864	0.0021853	0		
57446041451	574460	4145170	0.0008122	0.0022573	0		
57447041451	574470	4145170	0.0008058	0.0022395	0		
57448041451	574480	4145170	0.0007761	0.0021569	0		
57449041451	574490	4145170	0.0007646	0.0021251	0		
57450041451	574500	4145170	0.0007389	0.0020541	0		
57451041451	574510	4145170	0.0006869	0.0019093	0		
57452041451	574520	4145170	0.0006304	0.0017518	0		
57446041451	574460	4145180	0.000558	0.0015498	0		
57447041451	574470	4145180	0.0005008	0.0013905	0		
57448041451	574480	4145180	0.0004227	0.001171	0		
57449041451	574490	4145180	0.0004656	0.0012906	0		
57450041451	574500	4145180	0.0005444	0.0015101	0		
57451041451	574510	4145180	0.0006285	0.0017438	0		
57452041451	574520	4145180	0.000717	0.0019906	0		
57453041451	574530	4145180	0.000797	0.0022137	0		
57445041451	574450	4145190	0.0008685	0.0024131	0		
57446041451	574460	4145190	0.0009317	0.0025893	0		
57447041451	574470	4145190	0.0010057	0.0027957	0		
57448041451	574480	4145190	0.0010534	0.0029288	0		
57449041451	574490	4145190	0.0010551	0.0029339	0		
57450041451	574500	4145190	0.0010173	0.0028283	0		
57451041451	574510	4145190	0.000977	0.0027162	0		
57452041451	574520	4145190	0.0009339	0.002597	0		
57444041452	574440	4145200	0.0008552	0.0023777	0		
57445041452	574450	4145200	0.0007639	0.0021234	0		
57446041452	574460	4145200	0.0006738	0.0018724	0		
57447041452	574470	4145200	0.0005918	0.001644	0		
57448041452	574480	4145200	0.0004416	0.0012231	0		
57449041452	574490	4145200	0.0004987	0.0013821	0		
57450041452	574500	4145200	0.0005819	0.0016139	0		
57451041452	574510	4145200	0.0006893	0.0019128	0		
57443041452	574430	4145210	0.0008192	0.0022741	0		
57444041452	574440	4145210	0.0009618	0.0026714	0		
57445041452	574450	4145210	0.001058	0.0029405	0		
57446041452	574460	4145210	0.0012064	0.003354	0		
57447041452	574470	4145210	0.0013244	0.0036829	0		
57448041452	574480	4145210	0.0014065	0.0039119	0		
57449041452	574490	4145210	0.001442	0.0040112	0		
57450041452	574500	4145210	0.0013968	0.0038854	0		
57451041452	574510	4145210	0.0013124	0.0036503	0		
57443041452	574430	4145220	0.0012307	0.0034234	0		
57444041452	574440	4145220	0.0010915	0.0030357	0		
57445041452	574450	4145220	0.0009475	0.0026345	0		
57446041452	574460	4145220	0.0008108	0.0022537	0		
57447041452	574470	4145220	0.0006933	0.0019264	0		
57448041452	574480	4145220	0.0004655	0.0012882	0		
57449041452	574490	4145220	0.000531	0.0014712	0		
57450041452	574500	4145220	0.0006297	0.001746	0		
57451041452	574510	4145220	0.0007636	0.0021175	0		
57452041452	574520	4145220	0.0009217	0.0025581	0		
57453041452	574530	4145220	0.0010813	0.003004	0		
57444041452	574440	4145230	0.0013206	0.0036709	0		
57445041452	574450	4145230	0.0016193	0.0045033	0		

Garvey Reservoir Rehab - Unmitigated I/O Tower

Cancer Risk Summary & Maximum Annual GLC for Chronic Calculations

Cancer Risk Summary

Max Risk: 10.59739

XY	X	Y	Offroad Risk	Haul Risk	Total Risk
7446041452	574460	4145230	0.473253744	0.000672828	0.473927
7447041452	574470	4145230	0.509499637	0.000670803	0.51017
7448041452	574480	4145230	0.524436254	0.000655964	0.525092
7449041452	574490	4145230	0.52287104	0.000601551	0.523473
7450041452	574500	4145230	0.471062444	0.000611904	0.471674
7451041452	574510	4145230	0.426073711	0.000526271	0.4266
7452041452	574520	4145230	0.358456451	0.000504922	0.358961
7444041452	574440	4145240	0.296227999	0.000475504	0.296704
7445041452	574450	4145240	0.243793318	0.000443877	0.244237
7446041452	574460	4145240	0.200794643	0.000422413	0.201217
7447041452	574470	4145240	0.119112813	0.000602694	0.119716
7448041452	574480	4145240	0.140444449	0.00068466	0.141129
7449041452	574490	4145240	0.166583529	0.000666346	0.16725
7450041452	574500	4145240	0.202941223	0.000703484	0.203645
7451041452	574510	4145240	0.246968467	0.000666051	0.247635
7445041452	574450	4145250	0.31044909	0.000700483	0.31115
7446041452	574460	4145250	0.410041444	0.000767794	0.410809
7447041452	574470	4145250	0.543218827	0.000819941	0.544039
7448041452	574480	4145250	0.692339035	0.000809888	0.693149
7446041452	574460	4145260	0.808612103	0.000810999	0.809423
7447041452	574470	4145260	0.855993378	0.000812107	0.856805
7448041452	574480	4145260	0.851208294	0.000755583	0.851964
7447041452	574470	4145270	0.743275583	0.000740931	0.744017
7449041451	574490	4145130	0.622441034	0.000639401	0.62308
7448041451	574480	4145140	0.487743157	0.000589815	0.488333
7449041451	574490	4145140	0.376232814	0.000561315	0.376794
7449041451	574490	4145150	0.295512473	0.000501179	0.296014
7450041451	574500	4145150	0.235385881	0.000456921	0.235843
7446041451	574460	4145160	0.12201964	0.000666086	0.122686
7449041451	574490	4145160	0.145073012	0.00076934	0.145842
7450041451	574500	4145160	0.174990966	0.000813255	0.175804
7451041451	574510	4145160	0.213651761	0.000771696	0.214423
7446041451	574460	4145170	0.266734889	0.000763779	0.267499
7447041451	574470	4145170	0.945970844	0.000895469	0.946866
7448041451	574480	4145170	0.674987516	0.000705313	0.675693
7449041451	574490	4145170	0.481683542	0.00059456	0.482278
7450041451	574500	4145170	0.355728505	0.000526286	0.356255
7451041451	574510	4145170	0.269641715	0.000527158	0.270169
7452041451	574520	4145170	0.122645726	0.000698169	0.123344
7446041451	574460	4145180	0.14706307	0.000806806	0.14787
7447041451	574470	4145180	0.17870276	0.000872646	0.179575
7448041451	574480	4145180	0.219487775	0.00083844	0.220326
7449041451	574490	4145180	1.561167171	0.00105609	1.562223
7450041451	574500	4145180	0.916477733	0.000852858	0.917331
7451041451	574510	4145180	0.592724321	0.000707908	0.593432
7452041451	574520	4145180	0.411986782	0.000713092	0.4127
7453041451	574530	4145180	0.296384521	0.000652108	0.297037
7445041451	574450	4145190	0.125060628	0.000941194	0.126002
7446041451	574460	4145190	0.147197231	0.000891996	0.148089
7447041451	574470	4145190	0.179261766	0.000967972	0.18023
7448041451	574480	4145190	0.224809504	0.001047857	0.225857
7449041451	574490	4145190	2.428139409	0.001832714	2.429972
7450041451	574500	4145190	1.191083414	0.00144832	1.192532
7451041451	574510	4145190	0.708237141	0.001086597	0.709324
7452041451	574520	4145190	0.472381696	0.000848406	0.47323
7444041452	574440	4145200	0.331914887	0.000735373	0.33265
7445041452	574450	4145200	0.124702865	0.001135125	0.125838
7446041452	574460	4145200	0.147666796	0.001172409	0.148839
7447041452	574470	4145200	0.179843131	0.001276304	0.181119
7448041452	574480	4145200	0.223467891	0.001256724	0.224725
7449041452	574490	4145200	3.243906778	0.004008104	3.247915
7450041452	574500	4145200	1.446973603	0.002102542	1.449076

Max GLC for Chronic Calcs

Max GLC: 0.118173

XY	X	Y	2025	2026	2027	2034	2035
57446041452	574460	4145230	0.0019004	0.0052872	0		
57447041452	574470	4145230	0.0020454	0.0056916	0		
57448041452	574480	4145230	0.002105	0.005858	0		
57449041452	574490	4145230	0.0020982	0.00584	0		
57450041452	574500	4145230	0.001891	0.0052621	0		
57451041452	574510	4145230	0.0017101	0.0047592	0		
57452041452	574520	4145230	0.0014394	0.0040046	0		
57444041452	574440	4145240	0.0011901	0.00331	0		
57445041452	574450	4145240	0.00098	0.0027247	0		
57446041452	574460	4145240	0.0008078	0.0022447	0		
57447041452	574470	4145240	0.0004829	0.0013353	0		
57448041452	574480	4145240	0.0005691	0.0015741	0		
57449041452	574490	4145240	0.0006734	0.0018656	0		
57450041452	574500	4145240	0.0008193	0.0022716	0		
57451041452	574510	4145240	0.000995	0.0027624	0		
57445041452	574450	4145250	0.0012494	0.003471	0		
57446041452	574460	4145250	0.0016485	0.0045829	0		
57447041452	574470	4145250	0.0021819	0.0060693	0		
57448041452	574480	4145250	0.0027784	0.007733	0		
57446041452	574460	4145260	0.0032436	0.0090302	0		
57447041452	574470	4145260	0.0034331	0.0095589	0		
57448041452	574480	4145260	0.0034134	0.0095049	0		
57447041452	574470	4145270	0.0029814	0.0083005	0		
57449041451	574490	4145130	0.0024969	0.0069513	0		
57448041451	574480	4145140	0.0019575	0.005448	0		
57449041451	574490	4145140	0.0015111	0.0042035	0		
57449041451	574490	4145150	0.0011875	0.0033023	0		
57450041451	574500	4145150	0.0009465	0.002631	0		
57446041451	574460	4145160	0.0004952	0.0013684	0		
57449041451	574490	4145160	0.0005885	0.0016266	0		
57450041451	574500	4145160	0.0007086	0.0019609	0		
57451041451	574510	4145160	0.0008629	0.0023918	0		
57446041451	574460	4145170	0.0010751	0.002984	0		
57447041451	574470	4145170	0.003794	0.0105636	0		
57448041451	574480	4145170	0.0027079	0.0075383	0		
57449041451	574490	4145170	0.0019333	0.0053804	0		
57450041451	574500	4145170	0.0014287	0.0039744	0		
57451041451	574510	4145170	0.0010843	0.0030139	0		
57452041451	574520	4145170	0.000498	0.0013757	0		
57446041451	574460	4145180	0.0005968	0.0016492	0		
57447041451	574470	4145180	0.0007241	0.0020029	0		
57448041451	574480	4145180	0.0008869	0.0024576	0		
57449041451	574490	4145180	0.0062569	0.0174291	0		
57450041451	574500	4145180	0.0036756	0.0102341	0		
57451041451	574510	4145180	0.0023788	0.0066205	0		
57452041451	574520	4145180	0.0016557	0.004604	0		
57453041451	574530	4145180	0.0011926	0.0033136	0		
57445041451	574450	4145190	0.0005102	0.0014052	0		
57446041451	574460	4145190	0.0005982	0.0016516	0		
57447041451	574470	4145190	0.0007273	0.0020102	0		
57448041451	574480	4145190	0.0009104	0.0025192	0		
57449041451	574490	4145190	0.0097336	0.0271101	0		
57450041451	574500	4145190	0.0047804	0.0133042	0		
57451041451	574510	4145190	0.0028449	0.0079132	0		
57452041451	574520	4145190	0.0018988	0.0052793	0		
57444041452	574440	4145200	0.0013356	0.0037109	0		
57445041452	574450	4145200	0.0005108	0.0014032	0		
57446041452	574460	4145200	0.0006031	0.0016598	0		
57447041452	574470	4145200	0.0007329	0.0020199	0		
57448041452	574480	4145200	0.0009072	0.0025064	0		
57449041452	574490	4145200	0.0130201	0.0362345	0		
57450041452	574500	4145200	0.005811	0.016166	0		

Garvey Reservoir Rehab - Unmitigated I/O Tower

Cancer Risk Summary & Maximum Annual GLC for Chronic Calculations

Cancer Risk Summary

Max Risk: 10.59739

XY	X	Y	Offroad Risk	Haul Risk	Total Risk
7451041452(	574510	4145200	0.809014586	0.001434808	0.810449
7443041452:	574430	4145210	0.52942258	0.001058059	0.530481
7444041452:	574440	4145210	0.359641541	0.000868181	0.36051
7445041452:	574450	4145210	0.122846968	0.001350036	0.124197
7446041452:	574460	4145210	0.144022082	0.001328539	0.145351
7447041452:	574470	4145210	0.174923886	0.001491356	0.176415
7448041452:	574480	4145210	0.217028152	0.001543281	0.218571
7449041452:	574490	4145210	8.410344004	0.031855423	8.442199
7450041452:	574500	4145210	3.400830698	0.006253237	3.407084
7451041452:	574510	4145210	1.675070057	0.002854796	1.677925
7443041452:	574430	4145220	0.918490151	0.001788773	0.920279
7444041452:	574440	4145220	0.576736774	0.001281366	0.578018
7445041452:	574450	4145220	0.40420543	0.000986455	0.405192
7446041452:	574460	4145220	0.118866851	0.001591035	0.120458
7447041452:	574470	4145220	0.139617122	0.001656676	0.141274
7448041452:	574480	4145220	0.167947502	0.001849671	0.169797
7449041452:	574490	4145220	0.206876619	0.001995579	0.208872
7450041452:	574500	4145220	5.369244288	0.050009267	5.419254
7451041452:	574510	4145220	4.51101489	0.022492635	4.533508
7452041452:	574520	4145220	2.791179702	0.007257848	2.798438
7453041452:	574530	4145220	1.663867594	0.003484342	1.667352
7444041452:	574440	4145230	1.01307382	0.002112004	1.015186
7445041452:	574450	4145230	0.648937877	0.001484772	0.650423
7446041452:	574460	4145230	0.457601601	0.001068051	0.45867
7447041452:	574470	4145230	0.114126488	0.001951985	0.116078
7448041452:	574480	4145230	0.134071791	0.002103636	0.136175
7449041452:	574490	4145230	0.159964908	0.002331687	0.162297
7450041452:	574500	4145230	0.193058012	0.002610948	0.195669
7451041452:	574510	4145230	1.884137976	0.009294707	1.893433
7452041452:	574520	4145230	2.613617312	0.050762165	2.664379
7444041452(	574440	4145240	2.586807426	0.020566065	2.607373
7445041452(	574450	4145240	2.010003571	0.006688581	2.016692
7446041452(	574460	4145240	1.364688047	0.003998108	1.368686
7447041452(	574470	4145240	0.925801939	0.002480938	0.928283
7448041452(	574480	4145240	0.666110515	0.001569582	0.66768
7449041452(	574490	4145240	0.469899714	0.001223592	0.471123
7450041452(	574500	4145240	0.107955071	0.002483809	0.110439
7451041452(	574510	4145240	0.12414386	0.002799862	0.126944
7445041452!	574450	4145250	0.148225801	0.003020694	0.151246
7446041452!	574460	4145250	0.177808352	0.003627264	0.181436
7447041452!	574470	4145250	0.218571006	0.003552382	0.222123
7448041452!	574480	4145250	0.46629972	0.004545986	0.470846
7446041452(	574460	4145260	0.633218653	0.005278501	0.638497
7447041452(	574470	4145260	0.863394606	0.006523675	0.869918
7448041452(	574480	4145260	1.18636541	0.011169507	1.197535
7447041452:	574470	4145270	1.473716408	0.049243014	1.522959
7449041451:	574490	4145130	1.573107521	0.020625888	1.593733
7448041451(	574480	4145140	1.380362551	0.006608985	1.386972
7449041451(	574490	4145140	1.08286002	0.003956153	1.086816
7449041451!	574490	4145150	0.80832142	0.002630089	0.810952
7450041451!	574500	4145150	0.594356616	0.00187166	0.596228
7446041451(	574460	4145160	0.449149443	0.001366574	0.450516
7449041451(	574490	4145160	0.101738934	0.004363434	0.106102
7450041451(	574500	4145160	0.117569959	0.004981688	0.122552
7451041451(	574510	4145160	0.137381101	0.004837272	0.142218
7446041451:	574460	4145170	0.161798445	0.005938646	0.167737
7447041451:	574470	4145170	0.194757388	0.006003438	0.200761
7448041451:	574480	4145170	0.237845503	0.006129229	0.243975
7449041451:	574490	4145170	0.295423032	0.006360515	0.301784
7450041451:	574500	4145170	0.375897411	0.007063873	0.382961
7451041451:	574510	4145170	0.48371832	0.007732169	0.49145
7452041451:	574520	4145170	0.626756553	0.008969244	0.635726

Max GLC for Chronic Calcs

Max GLC: 0.118173

XY	X	Y	2025	2026	2027	2034	2035
574510414520	574510	4145200	0.0032517	0.0090413	0		
574430414521	574430	4145210	0.0021292	0.0059179	0		
574440414521	574440	4145210	0.0014479	0.0040216	0		
574450414521	574450	4145210	0.0005056	0.0013848	0		
574460414521	574460	4145210	0.0005901	0.0016208	0		
574470414521	574470	4145210	0.0007155	0.0019673	0		
574480414521	574480	4145210	0.0008844	0.0024376	0		
574490414521	574490	4145210	0.0339816	0.0941685	0		
574500414521	574500	4145210	0.0136714	0.0380088	0		
574510414521	574510	4145210	0.0067315	0.0187188	0		
574430414522	574430	4145220	0.0036934	0.0102664	0		
574440414522	574440	4145220	0.0023208	0.0064481	0		
574450414522	574450	4145220	0.0016275	0.0045201	0		
574460414522	574460	4145220	0.0004922	0.0013429	0		
574470414522	574470	4145220	0.0005759	0.0015751	0		
574480414522	574480	4145220	0.0006913	0.0018932	0		
574490414522	574490	4145220	0.0008486	0.002329	0		
574500414522	574500	4145220	0.022005	0.0604289	0		
574510414522	574510	4145220	0.0182832	0.0505654	0		
574520414522	574520	4145220	0.0112429	0.0312174	0		
574530414522	574530	4145220	0.0066933	0.0186004	0		
574440414523	574440	4145230	0.0040752	0.0113251	0		
574450414523	574450	4145230	0.0026118	0.0072558	0		
574460414523	574460	4145230	0.0018419	0.0051167	0		
574470414523	574470	4145230	0.000477	0.0012938	0		
574480414523	574480	4145230	0.0005584	0.0015179	0		
574490414523	574490	4145230	0.0006644	0.0018092	0		
574500414523	574500	4145230	0.0007997	0.0021813	0		
574510414523	574510	4145230	0.0076354	0.0211188	0		
574520414523	574520	4145230	0.0109882	0.0296921	0		
574440414524	574440	4145240	0.0105647	0.0290766	0		
574450414524	574450	4145240	0.0081116	0.0224958	0		
574460414524	574460	4145240	0.0055017	0.0152678	0		
574470414524	574470	4145240	0.0037299	0.0103552	0		
574480414524	574480	4145240	0.0026814	0.0074483	0		
574490414524	574490	4145240	0.0018928	0.0052555	0		
574500414524	574500	4145240	0.0004579	0.0012305	0		
574510414524	574510	4145240	0.000526	0.0014144	0		
574450414525	574450	4145250	0.0006247	0.0016854	0		
574460414525	574460	4145250	0.0007494	0.0020218	0		
574470414525	574470	4145250	0.0009117	0.0024758	0		
574480414525	574480	4145250	0.0019132	0.0052502	0		
574460414526	574460	4145260	0.0025887	0.0071202	0		
574470414526	574470	4145260	0.0035226	0.0097013	0		
574480414526	574480	4145260	0.0048634	0.0133534	0		
574470414527	574470	4145270	0.0064118	0.0169582	0		
574490414513	574490	4145130	0.0065097	0.0177673	0		
574480414514	574480	4145140	0.0055917	0.01547	0		
574490414514	574490	4145140	0.0043737	0.012123	0		
574490414515	574490	4145150	0.0032615	0.0090461	0		
574500414515	574500	4145150	0.0023975	0.0066509	0		
574460414516	574460	4145160	0.0018113	0.0050255	0		
574490414516	574490	4145160	0.0004527	0.0011808	0		
574500414516	574500	4145160	0.0005226	0.0013639	0		
574510414516	574510	4145160	0.0006003	0.0015834	0		
574460414517	574460	4145170	0.0007095	0.0018674	0		
574470414517	574470	4145170	0.0008421	0.0022358	0		
574480414517	574480	4145170	0.0010158	0.0027179	0		
574490414517	574490	4145170	0.0012485	0.0033627	0		
574500414517	574500	4145170	0.0015779	0.0042679	0		
574510414517	574510	4145170	0.0020162	0.0054779	0		
574520414517	574520	4145170	0.0026015	0.0070867	0		

Garvey Reservoir Rehab - Unmitigated I/O Tower

Cancer Risk Summary & Maximum Annual GLC for Chronic Calculations

Cancer Risk Summary

Max Risk: 10.59739

XY	X	Y	Offroad Risk	Haul Risk	Total Risk
7446041451	574460	4145180	0.792244433	0.014077407	0.806322
7447041451	574470	4145180	1.032795521	0.018719962	1.051515
7448041451	574480	4145180	0.970924833	0.007542353	0.978467
7449041451	574490	4145180	0.828445605	0.004113077	0.832559
7450041451	574500	4145180	0.669017341	0.002694822	0.671712
7451041451	574510	4145180	0.522759239	0.001987657	0.524747
7452041451	574520	4145180	0.413462555	0.001459515	0.414922
7453041451	574530	4145180	0.096238323	0.012670167	0.108908
7445041451	574450	4145190	0.109296683	0.015743583	0.12504
7446041451	574460	4145190	0.127005966	0.011541811	0.138548
7447041451	574470	4145190	0.147331392	0.01508192	0.162413
7448041451	574480	4145190	0.172352462	0.016150723	0.188503
7449041451	574490	4145190	0.206116372	0.016145059	0.222261
7450041451	574500	4145190	0.250881503	0.016701217	0.267583
7451041451	574510	4145190	0.308615553	0.017363826	0.325979
7452041451	574520	4145190	0.380682495	0.017792046	0.398475
7444041452	574440	4145200	0.470056235	0.019167619	0.489224
7445041452	574450	4145200	0.56752437	0.023082542	0.590607
7446041452	574460	4145200	0.66778753	0.07362195	0.741409
7447041452	574470	4145200	0.715571289	0.025580397	0.741152
7448041452	574480	4145200	0.693345245	0.008997187	0.702342
7449041452	574490	4145200	0.622329233	0.004825428	0.627155
7450041452	574500	4145200	0.531949283	0.003034803	0.534984
7451041452	574510	4145200	0.442083618	0.00207766	0.444161
7443041452	574430	4145210	0.365835318	0.001512405	0.367348
7444041452	574440	4145210	0.089619703	0.051011413	0.140631
7445041452	574450	4145210	0.101806015	0.065697139	0.167503
7446041452	574460	4145210	0.115266858	0.064330627	0.179597
7447041452	574470	4145210	0.134183592	0.070865113	0.205049
7448041452	574480	4145210	0.155202185	0.066835633	0.222038
7449041452	574490	4145210	0.181117663	0.072613003	0.253731
7450041452	574500	4145210	0.215753621	0.070278361	0.286032
7451041452	574510	4145210	0.262732412	0.068268288	0.331001
7443041452	574430	4145220	0.313042874	0.065645592	0.378688
7444041452	574440	4145220	0.368048979	0.066366083	0.434415
7445041452	574450	4145220	0.430389231	0.068210836	0.4986
7446041452	574460	4145220	0.491790354	0.071660974	0.563451
7447041452	574470	4145220	0.5228934	0.035235061	0.558128
7448041452	574480	4145220	0.52072446	0.009429555	0.530154
7449041452	574490	4145220	0.48588726	0.004821732	0.490709
7450041452	574500	4145220	0.428265011	0.002990872	0.431256
7451041452	574510	4145220	0.369882515	0.002067428	0.37195
7452041452	574520	4145220	0.31805156	0.001530142	0.319582
7453041452	574530	4145220	0.183152441	0.000687694	0.18384
7444041452	574440	4145230	0.202180976	0.000704124	0.202885
7445041452	574450	4145230	0.221433113	0.000656297	0.222089
7446041452	574460	4145230	0.246744865	0.000675269	0.24742
7447041452	574470	4145230	0.268098861	0.000648539	0.268747
7448041452	574480	4145230	0.299380788	0.000663647	0.300044
7449041452	574490	4145230	0.344704924	0.000693575	0.345398
7450041452	574500	4145230	0.383052676	0.000699404	0.383752
7451041452	574510	4145230	0.437253814	0.000738817	0.437993
7452041452	574520	4145230	0.497022642	0.000760335	0.497783
7444041452	574440	4145240	0.552095828	0.000758235	0.552854
7445041452	574450	4145240	0.603882063	0.000753201	0.604635
7446041452	574460	4145240	0.646098131	0.000750029	0.646848
7447041452	574470	4145240	0.673511743	0.000753859	0.674266
7448041452	574480	4145240	0.689342768	0.000754779	0.690098
7449041452	574490	4145240	0.698443371	0.000744854	0.699188
7450041452	574500	4145240	0.695849588	0.000729048	0.696579
7451041452	574510	4145240	0.69063966	0.00068758	0.691327
7445041452	574450	4145250	0.65365588	0.000687855	0.654344

Max GLC for Chronic Calcs

Max GLC: 0.118173

XY	X	Y	2025	2026	2027	2034	2035
574460414518	574460	4145180	0.0033171	0.0089866	0		
574470414518	574470	4145180	0.0043281	0.0117191	0		
574480414518	574480	4145180	0.0039635	0.0109117	0		
574490414518	574490	4145180	0.0033575	0.0092861	0		
574500414518	574500	4145180	0.0027048	0.0074925	0		
574510414518	574510	4145180	0.0021123	0.0058533	0		
574520414518	574520	4145180	0.0016695	0.0046283	0		
574530414518	574530	4145180	0.0005178	0.0012065	0		
574450414519	574450	4145190	0.0006022	0.0013844	0		
574460414519	574460	4145190	0.000629	0.0015379	0		
574470414519	574470	4145190	0.0007474	0.0018018	0		
574480414519	574480	4145190	0.0008587	0.0020921	0		
574490414519	574490	4145190	0.0009938	0.0024688	0		
574500414519	574500	4145190	0.0011787	0.0029741	0		
574510414519	574510	4145190	0.0014166	0.0036251	0		
574520414519	574520	4145190	0.0017094	0.0044337	0		
574440414520	574440	4145200	0.0020814	0.0054452	0		
574450414520	574450	4145200	0.0025123	0.0065737	0		
574460414520	574460	4145200	0.0034429	0.0082218	0		
574470414520	574470	4145200	0.0031308	0.0082517	0		
574480414520	574480	4145200	0.0028682	0.00783	0		
574490414520	574490	4145200	0.0025403	0.0069939	0		
574500414520	574500	4145200	0.00216	0.0059668	0		
574510414520	574510	4145200	0.0017904	0.0049541	0		
574430414521	574430	4145210	0.0014795	0.0040975	0		
574440414521	574440	4145210	0.0008929	0.0015343	0		
574450414521	574450	4145210	0.0010955	0.0018241	0		
574460414521	574460	4145210	0.0011351	0.0019599	0		
574470414521	574470	4145210	0.0012792	0.0022394	0		
574480414521	574480	4145210	0.0013211	0.0024317	0		
574490414521	574490	4145210	0.0014853	0.0027814	0		
574500414521	574500	4145210	0.0015994	0.0031434	0		
574510414521	574510	4145210	0.0017663	0.0036465	0		
574430414522	574430	4145220	0.0019401	0.0041803	0		
574440414522	574440	4145220	0.0021677	0.0048016	0		
574450414522	574450	4145220	0.0024364	0.0055164	0		
574460414522	574460	4145220	0.0027182	0.0062376	0		
574470414522	574470	4145220	0.0024611	0.0062031	0		
574480414522	574480	4145220	0.0021821	0.0059085	0		
574490414522	574490	4145220	0.0019944	0.0054716	0		
574500414522	574500	4145220	0.0017447	0.0048095	0		
574510414522	574510	4145220	0.0015015	0.0041485	0		
574520414522	574520	4145220	0.0012885	0.0035646	0		
574530414522	574530	4145220	0.00074	0.0020506	0		
574440414523	574440	4145230	0.0008163	0.0022631	0		
574450414523	574450	4145230	0.0008928	0.0024774	0		
574460414523	574460	4145230	0.0009942	0.00276	0		
574470414523	574470	4145230	0.0010794	0.002998	0		
574480414523	574480	4145230	0.0012047	0.0033472	0		
574490414523	574490	4145230	0.0013864	0.0038532	0		
574500414523	574500	4145230	0.0015398	0.0042811	0		
574510414523	574510	4145230	0.0017571	0.0048862	0		
574520414523	574520	4145230	0.0019964	0.0055533	0		
574440414524	574440	4145240	0.0022168	0.0061677	0		
574450414524	574450	4145240	0.0024239	0.0067454	0		
574460414524	574460	4145240	0.0025927	0.0072164	0		
574470414524	574470	4145240	0.0027025	0.0075223	0		
574480414524	574480	4145240	0.0027658	0.007699	0		
574490414524	574490	4145240	0.0028021	0.0078004	0		
574500414524	574500	4145240	0.0027916	0.0077713	0		
574510414524	574510	4145240	0.0027703	0.0077127	0		
574450414525	574450	4145250	0.0026223	0.0073001	0		

Garvey Reservoir Rehab - Unmitigated I/O Tower

Cancer Risk Summary & Maximum Annual GLC for Chronic Calculations

Cancer Risk Summary

Max Risk: 10.59739

XY	X	Y	Offroad Risk	Haul Risk	Total Risk
7446041452	574460	4145250	0.607236094	0.000685575	0.607922
7447041452	574470	4145250	0.56099519	0.00066716	0.561662
7448041452	574480	4145250	0.525241222	0.000589437	0.525831
7446041452	574460	4145260	0.473365545	0.00056981	0.473935
7447041452	574470	4145260	0.188831933	0.000734615	0.189567
7448041452	574480	4145260	0.207927549	0.000707733	0.208635
7447041452	574470	4145270	0.228923781	0.000670288	0.229594
7449041451	574490	4145130	0.253184604	0.000678401	0.253863
7448041451	574480	4145140	0.284198209	0.000696262	0.284894
7449041451	574490	4145140	0.323350928	0.000717168	0.324068
7449041451	574490	4145150	0.376299894	0.000773588	0.377073
7450041451	574500	4145150	0.430009107	0.000792398	0.430802
7446041451	574460	4145160	0.498520776	0.0008279	0.499349
7449041451	574490	4145160	0.574232431	0.000839728	0.575072
7450041451	574500	4145160	0.653767681	0.000839348	0.654607
7451041451	574510	4145160	0.738915343	0.000829019	0.739744
7446041451	574460	4145170	0.812949983	0.000824384	0.813774
7447041451	574470	4145170	0.866838077	0.000832106	0.86767
7448041451	574480	4145170	0.899685219	0.000838122	0.900523
7449041451	574490	4145170	0.915337362	0.000834357	0.916172
7450041451	574500	4145170	0.909814392	0.000823912	0.910638
7451041451	574510	4145170	0.901496395	0.000778302	0.902275
7452041451	574520	4145170	0.851700218	0.000759393	0.85246
7446041451	574460	4145180	0.774781112	0.000761818	0.775543
7447041451	574470	4145180	0.697370082	0.000746221	0.698116
7448041451	574480	4145180	0.639770193	0.000650268	0.64042
7449041451	574490	4145180	0.563410092	0.00063069	0.564041
7450041451	574500	4145180	0.1939077	0.000784306	0.194692
7451041451	574510	4145180	0.215194615	0.000779316	0.215974
7452041451	574520	4145180	0.235497682	0.000706759	0.236204
7453041451	574530	4145180	0.264409427	0.000727053	0.265136
7445041451	574450	4145190	0.299805632	0.000748957	0.300555
7446041451	574460	4145190	0.35293348	0.000835382	0.353769
7447041451	574470	4145190	0.410041444	0.000875129	0.410917
7448041451	574480	4145190	0.477971748	0.000898063	0.47887
7449041451	574490	4145190	0.561487114	0.000920449	0.562408
7450041451	574500	4145190	0.661437232	0.000931256	0.662368
7451041451	574510	4145190	0.775474279	0.000934064	0.776408
7452041451	574520	4145190	0.907645452	0.000924442	0.90857
7444041452	574440	4145200	1.03923526	0.000917064	1.040152
7445041452	574450	4145200	1.135495943	0.000936852	1.136433
7446041452	574460	4145200	1.200318178	0.000954075	1.201272
7447041452	574470	4145200	1.257962788	0.000941463	1.258904
7448041452	574480	4145200	1.281552804	0.000905135	1.282458
7449041452	574490	4145200	1.244747906	0.000857429	1.245605
7450041452	574500	4145200	1.157811428	0.000817444	1.158629
7451041452	574510	4145200	1.025215411	0.000850366	1.026066
7443041452	574430	4145210	0.772969936	0.000801565	0.773772
7444041452	574440	4145210	0.676999935	0.000685067	0.677685
7445041452	574450	4145210	0.198021978	0.000829346	0.198851
7446041452	574460	4145210	0.216670389	0.00073733	0.217408
7447041452	574470	4145210	0.242764748	0.000756708	0.243521
7448041452	574480	4145210	0.276841701	0.000790978	0.277633
7449041452	574490	4145210	0.982373258	0.000869649	0.983243
7450041452	574500	4145210	0.818338792	0.000755718	0.819095
7451041452	574510	4145210	0.201264208	0.000880431	0.202145
7443041452	574430	4145220	0.221052989	0.000791375	0.221844
7444041452	574440	4145220	0.249674052	0.000819722	0.250494
7445041452	574450	4145220	1.24729697	0.000924026	1.248221
7446041452	574460	4145220	0.988902438	0.000844688	0.989747
7447041452	574470	4145220	0.201264208	0.000863759	0.202128
7448041452	574480	4145220	0.224787143	0.00086002	0.225647

Max GLC for Chronic Calcs

Max GLC: 0.118173

XY	X	Y	2025	2026	2027	2034	2035
57446041452	574460	4145250	0.0024366	0.0067822	0		
57447041452	574470	4145250	0.0022514	0.0062661	0		
57448041452	574480	4145250	0.0021075	0.0058663	0		
57446041452	574460	4145260	0.0018998	0.0052873	0		
57447041452	574470	4145260	0.0007632	0.0021145	0		
57448041452	574480	4145260	0.0008393	0.0023273	0		
57447041452	574470	4145270	0.0009229	0.0025611	0		
57449041451	574490	4145130	0.00102	0.0028319	0		
57448041451	574480	4145140	0.0011443	0.0031781	0		
57449041451	574490	4145140	0.0013012	0.0036152	0		
57449041451	574490	4145150	0.0015136	0.0042065	0		
57450041451	574500	4145150	0.0017287	0.0048059	0		
57446041451	574460	4145160	0.0020031	0.0055707	0		
57449041451	574490	4145160	0.0023062	0.0064156	0		
57450041451	574500	4145160	0.0026244	0.0073029	0		
57451041451	574510	4145160	0.0029649	0.0082528	0		
57446041451	574460	4145170	0.0032611	0.0090788	0		
57447041451	574470	4145170	0.0034767	0.0096801	0		
57448041451	574480	4145170	0.0036082	0.0100466	0		
57449041451	574490	4145170	0.0036708	0.0102212	0		
57450041451	574500	4145170	0.0036486	0.0101595	0		
57451041451	574510	4145170	0.0036148	0.0100662	0		
57452041451	574520	4145170	0.0034154	0.0095104	0		
57446041451	574460	4145180	0.0031077	0.0086523	0		
57447041451	574470	4145180	0.0027978	0.0077884	0		
57448041451	574480	4145180	0.0025664	0.0071448	0		
57449041451	574490	4145180	0.0022607	0.0062926	0		
57450041451	574500	4145180	0.000784	0.0021717	0		
57451041451	574510	4145180	0.0008691	0.0024091	0		
57452041451	574520	4145180	0.0009496	0.0026349	0		
57453041451	574530	4145180	0.0010655	0.0029577	0		
57445041451	574450	4145190	0.0012073	0.0033528	0		
57446041451	574460	4145190	0.0014208	0.0039465	0		
57447041451	574470	4145190	0.0016496	0.004584	0		
57448041451	574480	4145190	0.0019217	0.0053422	0		
57449041451	574490	4145190	0.002256	0.0062742	0		
57450041451	574500	4145190	0.002656	0.0073895	0		
57451041451	574510	4145190	0.0031123	0.0086618	0		
57452041451	574520	4145190	0.003641	0.0101364	0		
57444041452	574440	4145200	0.0041673	0.0116044	0		
57445041452	574450	4145200	0.0045527	0.0126786	0		
57446041452	574460	4145200	0.0048122	0.013402	0		
57447041452	574470	4145200	0.0050427	0.014045	0		
57448041452	574480	4145200	0.0051367	0.0143079	0		
57449041452	574490	4145200	0.0049889	0.0138967	0		
57450041452	574500	4145200	0.0046407	0.0129264	0		
57451041452	574510	4145200	0.0041106	0.0114473	0		
57443041452	574430	4145210	0.0031009	0.0086325	0		
57444041452	574440	4145210	0.0027157	0.0075605	0		
57445041452	574450	4145210	0.0008009	0.002218	0		
57446041452	574460	4145210	0.0008746	0.0024251	0		
57447041452	574470	4145210	0.0009792	0.0027165	0		
57448041452	574480	4145210	0.0011159	0.003097	0		
57449041452	574490	4145210	0.0039394	0.0109695	0		
57450041452	574500	4145210	0.0032819	0.0091382	0		
57451041452	574510	4145210	0.0008144	0.0022547	0		
57443041452	574430	4145220	0.0008927	0.0024746	0		
57444041452	574440	4145220	0.0010075	0.0027942	0		
57445041452	574450	4145220	0.0049998	0.0139259	0		
57446041452	574460	4145220	0.0039652	0.0110421	0		
57447041452	574470	4145220	0.0008143	0.0022546	0		
57448041452	574480	4145220	0.0009083	0.002517	0		

Garvey Reservoir Rehab - Unmitigated I/O Tower

Cancer Risk Summary & Maximum Annual GLC for Chronic Calculations

Cancer Risk Summary

Max Risk: 10.59739

XY	X	Y	Offroad Risk	Haul Risk	Total Risk
7449041452	574490	4145220	1.555890163	0.00106192	1.556952
7450041452	574500	4145220	1.173888416	0.000962451	1.174851
7451041452	574510	4145220	0.202717621	0.000931179	0.203649
7452041452	574520	4145220	0.227872852	0.000962165	0.228835
7453041452	574530	4145220	1.950547785	0.001417724	1.951966
7444041452	574440	4145230	1.393018427	0.00132665	1.394345
7445041452	574450	4145230	0.203790911	0.001026872	0.204818
7446041452	574460	4145230	0.22986291	0.001079287	0.230942
7447041452	574470	4145230	2.363384255	0.001908244	2.365292
7448041452	574480	4145230	1.594282635	0.001757428	1.59604
7449041452	574490	4145230	0.206317614	0.001278664	0.207596
7450041452	574500	4145230	0.229370986	0.00117781	0.230549
7451041452	574510	4145230	4.548490594	0.004048323	4.552539
7452041452	574520	4145230	2.72447921	0.002932876	2.727412
7444041452	574440	4145240	1.800153045	0.002212921	1.802366
7445041452	574450	4145240	0.204461717	0.001377573	0.205839
7446041452	574460	4145240	0.227604529	0.001289343	0.228894
7447041452	574470	4145240	9.884462896	0.023996242	9.908459
7448041452	574480	4145240	4.923381795	0.006931299	4.930313
7449041452	574490	4145240	3.061693465	0.003971506	3.065665
7450041452	574500	4145240	2.013693005	0.002734474	2.016427
7451041452	574510	4145240	0.201599611	0.001490968	0.203091
7445041452	574450	4145250	0.224563541	0.001425685	0.225989
7446041452	574460	4145250	9.215758597	0.034957031	9.250716
7447041452	574470	4145250	4.801071472	0.008889431	4.809961
7448041452	574480	4145250	3.005166866	0.004792907	3.00996
7446041452	574460	4145260	2.044885491	0.003251244	2.048137
7447041452	574470	4145260	0.197351172	0.001595975	0.198947
7448041452	574480	4145260	0.220359823	0.001588406	0.221948
7447041452	574470	4145270	10.50477971	0.092608714	10.59739
7457041450	574570	4145030	7.266731306	0.024514952	7.291246
7463041450	574630	4145080	4.863232843	0.010804565	4.874037
7461041450	574610	4145090	3.243526654	0.005956416	3.249483
7462041450	574620	4145090	2.21797584	0.003864818	2.221841
7463041450	574630	4145090	0.193505216	0.001808413	0.195314
7464041450	574640	4145090	0.215261696	0.00179492	0.217057
7460041451	574600	4145100	0.243435555	0.00191339	0.245349
7461041451	574610	4145100	7.561013967	0.075238391	7.636252
7462041451	574620	4145100	6.900761827	0.055465894	6.956228
7463041451	574630	4145100	5.448488855	0.020430467	5.468919
7464041451	574640	4145100	4.087669123	0.010742458	4.098412
7465041451	574650	4145100	2.990543292	0.006460077	2.997003
7459041451	574590	4145110	2.198433021	0.004291898	2.202725
7460041451	574600	4145110	0.188161127	0.00200961	0.190171
7461041451	574610	4145110	0.209067919	0.002045566	0.211113
7462041451	574620	4145110	0.23529644	0.002144026	0.23744
7463041451	574630	4145110	4.479934204	0.018087159	4.498021
7464041451	574640	4145110	4.901312272	0.071639828	4.972952
7465041451	574650	4145110	4.730144901	0.055484395	4.785629
7466041451	574660	4145110	4.067388417	0.019667412	4.087056
7460041451	574600	4145120	3.280532794	0.010760622	3.291293
7461041451	574610	4145120	2.570193793	0.006804438	2.576998
7462041451	574620	4145120	1.987621006	0.004673776	1.992295
7463041451	574630	4145120	0.183443124	0.002280814	0.185724
7464041451	574640	4145120	0.202270417	0.002348809	0.204619
7465041451	574650	4145120	0.226285277	0.002433481	0.228719
7466041451	574660	4145120	2.463893378	0.009744156	2.473638
7460041451	574600	4145130	3.096418864	0.018974489	3.115393
7462041451	574620	4145130	3.378537574	0.071994175	3.450532
7463041451	574630	4145130	3.406040626	0.054171943	3.460213
7464041451	574640	4145130	3.13733804	0.01817991	3.155518
7465041451	574650	4145130	2.707418373	0.009948282	2.717367

Max GLC for Chronic Calcs

Max GLC: 0.118173

XY	X	Y	2025	2026	2027	2034	2035
57449041452	574490	4145220	0.0062359	0.0173703	0		
57450041452	574500	4145220	0.0047065	0.0131072	0		
57451041452	574510	4145220	0.0008208	0.0022715	0		
57452041452	574520	4145220	0.0009217	0.0025525	0		
57453041452	574530	4145220	0.0078185	0.0217773	0		
57444041452	574440	4145230	0.005587	0.0155559	0		
57445041452	574450	4145230	0.0008261	0.0022845	0		
57446041452	574460	4145230	0.0009309	0.0025759	0		
57447041452	574470	4145230	0.0094753	0.0263884	0		
57448041452	574480	4145230	0.0063968	0.0178059	0		
57449041452	574490	4145230	0.0008388	0.0023153	0		
57450041452	574500	4145230	0.00093	0.0025714	0		
57451041452	574510	4145230	0.0182399	0.0507903	0		
57452041452	574520	4145230	0.0109307	0.0304279	0		
57444041452	574440	4145240	0.0072252	0.0201076	0		
57445041452	574450	4145240	0.0008324	0.0022956	0		
57446041452	574460	4145240	0.0009241	0.0025529	0		
57447041452	574470	4145240	0.0397968	0.1105331	0		
57448041452	574480	4145240	0.0197699	0.0550032	0		
57449041452	574490	4145240	0.0122907	0.0342011	0		
57450041452	574500	4145240	0.008085	0.0224956	0		
57451041452	574510	4145240	0.0008222	0.0022649	0		
57445041452	574450	4145250	0.0009134	0.0025204	0		
57446041452	574460	4145250	0.0372363	0.1031871	0		
57447041452	574470	4145250	0.0193011	0.053659	0		
57448041452	574480	4145250	0.0120732	0.0335791	0		
57446041452	574460	4145260	0.0082152	0.022849	0		
57447041452	574470	4145260	0.0008063	0.0022186	0		
57448041452	574480	4145260	0.0008982	0.0024752	0		
57447041452	574470	4145270	0.0429973	0.1181727	0		
57457041450	574570	4145030	0.0293293	0.0813323	0		
57463041450	574630	4145080	0.0195699	0.0543726	0		
57461041450	574610	4145090	0.013039	0.0362507	0		
57462041450	574620	4145090	0.0089141	0.0247866	0		
57463041450	574630	4145090	0.0007931	0.0021779	0		
57464041450	574640	4145090	0.00088	0.0024205	0		
57460041451	574600	4145100	0.000994	0.0027361	0		
57461041451	574610	4145100	0.031038	0.085147	0		
57462041451	574620	4145100	0.0281894	0.0775734	0		
57463041451	574630	4145100	0.0220122	0.0610032	0		
57464041451	574640	4145100	0.0164664	0.045719	0		
57465041451	574650	4145100	0.0120321	0.0334334	0		
57459041451	574590	4145110	0.0088404	0.024573	0		
57460041451	574600	4145110	0.0007738	0.0021204	0		
57461041451	574610	4145110	0.0008579	0.002354	0		
57462041451	574620	4145110	0.0009638	0.0026477	0		
57463041451	574630	4145110	0.0181127	0.0501724	0		
57464041451	574640	4145110	0.0203595	0.0554348	0		
57465041451	574650	4145110	0.0195054	0.0533558	0		
57466041451	574660	4145110	0.0164787	0.0455862	0		
57460041451	574600	4145120	0.0132374	0.0367139	0		
57461041451	574610	4145120	0.010354	0.0287471	0		
57462041451	574620	4145120	0.008001	0.022225	0		
57463041451	574630	4145120	0.0007578	0.0020706	0		
57464041451	574640	4145120	0.0008338	0.0022814	0		
57465041451	574650	4145120	0.0009308	0.0025502	0		
57466041451	574660	4145120	0.0099595	0.0275919	0		
57460041451	574600	4145130	0.0125868	0.0347457	0		
57462041451	574620	4145130	0.0142709	0.0384488	0		
57463041451	574630	4145130	0.0141943	0.0385689	0		
57464041451	574640	4145130	0.0127422	0.035194	0		
57465041451	574650	4145130	0.010936	0.0303111	0		

Garvey Reservoir Rehab - Unmitigated I/O Tower

Cancer Risk Summary & Maximum Annual GLC for Chronic Calculations

Cancer Risk Summary

Max Risk: 10.59739

XY	X	Y	Offroad Risk	Haul Risk	Total Risk
7463041451	574630	4145140	2.188080246	0.007044581	2.195125
7464041451	574640	4145140	1.76480156	0.004947266	1.769749
7459041451	574590	4145150	0.176891584	0.002601602	0.179493
7460041451	574600	4145150	0.194578506	0.002712701	0.197291
7460041451	574600	4145160	0.216916351	0.002818191	0.219735
7461041451	574610	4145160	1.228872161	0.005550054	1.234422
7461041451	574610	4145170	1.501375982	0.007050897	1.508427
7457041450	574570	4145030	1.833827514	0.01019751	1.844025
7463041450	574630	4145080	2.191590798	0.018864277	2.210455
7461041450	574610	4145090	2.458571649	0.070682135	2.529254
7462041450	574620	4145090	2.525629904	0.046752875	2.572383
7463041450	574630	4145090	2.398601578	0.017907952	2.41651
7464041450	574640	4145090	2.159369742	0.009884294	2.169254
7460041451	574600	4145100	1.872533029	0.006160523	1.878694
7461041451	574610	4145100	1.580799431	0.004462956	1.585262
7462041451	574620	4145100	0.170138802	0.003025504	0.173164
7463041451	574630	4145100	0.186864235	0.00319044	0.190055
7464041451	574640	4145100	0.20701078	0.003296786	0.210308
7465041451	574650	4145100	0.232389613	0.003172807	0.235562
7459041451	574590	4145110	0.849777241	0.005250003	0.855027
7460041451	574600	4145110	1.016159528	0.006143128	1.022303
7461041451	574610	4145110	1.207831207	0.007718834	1.21555
7462041451	574620	4145110	1.433736361	0.011021086	1.444757
7463041451	574630	4145110	1.649937186	0.019329679	1.669267
7464041451	574640	4145110	1.861867211	0.064384568	1.926252
7465041451	574650	4145110	1.924990071	0.045087722	1.970078
7466041451	574660	4145110	1.870319369	0.01803695	1.888356
7460041451	574600	4145120	1.737790432	0.00966032	1.747451
7461041451	574610	4145120	1.556896372	0.006231463	1.563128
7462041451	574620	4145120	1.358852034	0.004437459	1.363289
7463041451	574630	4145120	0.163631982	0.003530773	0.167163
7464041451	574640	4145120	0.178836922	0.003831384	0.182668
7465041451	574650	4145120	0.197865456	0.003817698	0.201683
7466041451	574660	4145120	0.219778457	0.003683319	0.223462
7460041451	574600	4145130	0.245358532	0.003641334	0.249
7462041451	574620	4145130	0.404518473	0.00448637	0.409005
7463041451	574630	4145130	0.46730593	0.004755478	0.472061
7464041451	574640	4145130	0.537159211	0.005165338	0.542325
7465041451	574650	4145130	0.63073667	0.005544874	0.636282
7463041451	574630	4145140	0.737685532	0.006099828	0.743785
7464041451	574640	4145140	0.853578476	0.006929277	0.860508
7459041451	574590	4145150	1.001759556	0.008704692	1.010464
7460041451	574600	4145150	1.156156773	0.012338519	1.168495
7460041451	574600	4145160	1.296042217	0.021579935	1.317622
7461041451	574610	4145160	1.407015916	0.068770446	1.475786
7461041451	574610	4145170	1.50329896	0.04477715	1.548076
7457041450	574570	4145030	1.484941231	0.018032796	1.502974
7463041450	574630	4145080	1.415535154	0.00937821	1.424913
7461041450	574610	4145090	1.300447178	0.006186474	1.306634
7462041450	574620	4145090	1.16458657	0.004474802	1.169061
7463041450	574630	4145090	0.156923921	0.004255785	0.16118
7464041450	574640	4145090	0.170496565	0.004819072	0.175316
7460041451	574600	4145100	0.188094047	0.004528536	0.192623
7461041451	574610	4145100	0.207502705	0.004555945	0.212059
7462041451	574620	4145100	0.230086512	0.004637275	0.234724
7463041451	574630	4145100	0.256650436	0.004734048	0.261384
7464041451	574640	4145100	0.287999444	0.004880137	0.29288
7465041451	574650	4145100	0.324558379	0.005144842	0.329703
7459041451	574590	4145110	0.368585623	0.005399047	0.373985
7460041451	574600	4145110	0.41938801	0.005789174	0.425177
7461041451	574610	4145110	0.478642554	0.006228327	0.484871
7462041451	574620	4145110	0.551402662	0.006615414	0.558018

Max GLC for Chronic Calcs

Max GLC: 0.118173

XY	X	Y	2025	2026	2027	2034	2035
57463041451	574630	4145140	0.0088278	0.0244864	0		
57464041451	574640	4145140	0.0071124	0.0197418	0		
57459041451	574590	4145150	0.000735	0.0020008	0		
57460041451	574600	4145150	0.0008069	0.0021993	0		
57460041451	574600	4145160	0.0008974	0.0024497	0		
57461041451	574610	4145160	0.0049746	0.0137688	0		
57461041451	574610	4145170	0.0060805	0.0168248	0		
57457041450	574570	4145030	0.0074435	0.020567	0		
57463041450	574630	4145080	0.0089657	0.0246494	0		
57461041450	574610	4145090	0.0105766	0.0281709	0		
57462041450	574620	4145090	0.0105942	0.0286684	0		
57463041450	574630	4145090	0.0097838	0.026949	0		
57464041450	574640	4145090	0.0087427	0.0241958	0		
57460041451	574600	4145100	0.0075561	0.0209565	0		
57461041451	574610	4145100	0.0063712	0.0176839	0		
57462041451	574620	4145100	0.0007124	0.0019299	0		
57463041451	574630	4145100	0.000781	0.0021183	0		
57464041451	574640	4145100	0.0008627	0.0023442	0		
57465041451	574650	4145100	0.000963	0.002626	0		
57459041451	574590	4145110	0.0034548	0.009536	0		
57460041451	574600	4145110	0.0041298	0.0114017	0		
57461041451	574610	4145110	0.0049131	0.0135567	0		
57462041451	574620	4145110	0.0058515	0.0161118	0		
57463041451	574630	4145110	0.0068035	0.018611	0		
57464041451	574640	4145110	0.0081234	0.0214475	0		
57465041451	574650	4145110	0.0081738	0.0219496	0		
57466041451	574660	4145110	0.0076717	0.0210562	0		
57460041451	574600	4145120	0.0070537	0.0194899	0		
57461041451	574610	4145120	0.0062941	0.0174357	0		
57462041451	574620	4145120	0.0054829	0.0152073	0		
57463041451	574630	4145120	0.0006916	0.0018626	0		
57464041451	574640	4145120	0.0007556	0.0020354	0		
57465041451	574650	4145120	0.0008316	0.0022476	0		
57466041451	574660	4145120	0.0009179	0.0024907	0		
57460041451	574600	4145130	0.0010198	0.0027756	0		
57462041451	574620	4145130	0.0016654	0.0045602	0		
57463041451	574630	4145130	0.0019194	0.0052636	0		
57464041451	574640	4145130	0.0022032	0.0060472	0		
57465041451	574650	4145130	0.0025815	0.0070953	0		
57463041451	574630	4145140	0.0030152	0.0082943	0		
57464041451	574640	4145140	0.0034876	0.009596	0		
57459041451	574590	4145150	0.004099	0.0112679	0		
57460041451	574600	4145150	0.0047548	0.0130286	0		
57460041451	574600	4145160	0.0054112	0.0146861	0		
57461041451	574610	4145160	0.0063496	0.0164186	0		
57461041451	574610	4145170	0.0064834	0.0172415	0		
57457041450	574570	4145030	0.0061298	0.0167565	0		
57463041450	574630	4145080	0.0057615	0.0158915	0		
57461041450	574610	4145090	0.0052676	0.014574	0		
57462041450	574620	4145090	0.0047061	0.0130403	0		
57463041450	574630	4145090	0.0006724	0.0017954	0		
57464041450	574640	4145090	0.0007326	0.0019527	0		
57460041451	574600	4145100	0.0008	0.002146	0		
57461041451	574610	4145100	0.0008779	0.0023628	0		
57462041451	574620	4145100	0.0009691	0.0026157	0		
57463041451	574630	4145100	0.0010764	0.0029131	0		
57464041451	574640	4145100	0.0012033	0.0032644	0		
57465041451	574650	4145100	0.0013524	0.003675	0		
57459041451	574590	4145110	0.0015312	0.0041689	0		
57460041451	574600	4145110	0.0017385	0.0047398	0		
57461041451	574610	4145110	0.0019802	0.0054055	0		
57462041451	574620	4145110	0.0022753	0.0062213	0		

Garvey Reservoir Rehab - Unmitigated I/O Tower

Cancer Risk Summary & Maximum Annual GLC for Chronic Calculations

Cancer Risk Summary

Max Risk: 10.59739

XY	X	Y	Offroad Risk	Haul Risk	Total Risk
7463041451	574630	4145110	0.633173932	0.00713739	0.640311
7464041451	574640	4145110	0.72002097	0.00792086	0.727942
7465041451	574650	4145110	0.807494093	0.009524293	0.817018
7466041451	574660	4145110	0.936020552	0.013933727	0.949954
7460041451	574600	4145120	1.043327177	0.027460293	1.070787
7461041451	574610	4145120	1.134825137	0.095654587	1.23048
7462041451	574620	4145120	1.197679674	0.040334388	1.238014
7463041451	574630	4145120	1.197702034	0.017770802	1.215473
7464041451	574640	4145120	1.162753034	0.010358602	1.173112
7465041451	574650	4145120	1.094286085	0.006149034	1.100435
7466041451	574660	4145120	1.000909868	0.004518428	1.005428
7460041451	574600	4145130	0.149723934	0.005485594	0.15521
7462041451	574620	4145130	0.16229037	0.006507211	0.168798
7463041451	574630	4145130	0.177226987	0.006753982	0.183981
7464041451	574640	4145130	0.195070431	0.006638139	0.201709
7465041451	574650	4145130	0.214725051	0.006716177	0.221441
7463041451	574630	4145140	0.238136186	0.006671328	0.244808
7464041451	574640	4145140	0.264476508	0.006782524	0.271259
7459041451	574590	4145150	0.295668994	0.006879956	0.302549
7460041451	574600	4145150	0.332138489	0.00725234	0.339391
7460041451	574600	4145160	0.375405486	0.007638685	0.383044
7461041451	574610	4145160	0.424083653	0.007968529	0.432052
7461041451	574610	4145170	0.480140688	0.008308648	0.488449
7457041450	574570	4145030	0.54471696	0.008783109	0.5535
7463041450	574630	4145080	0.61870688	0.009634303	0.628341
7461041450	574610	4145090	0.681628497	0.011250765	0.692879
7462041450	574620	4145090	0.774468069	0.0156888	0.790157
7463041450	574630	4145090	0.861359827	0.035578328	0.896938
7464041450	574640	4145090	0.9281274	0.097724199	1.025852
7460041451	574600	4145100	0.974569546	0.032706955	1.007277
7461041451	574610	4145100	0.989640325	0.016557936	1.006198
7462041451	574620	4145100	0.970164586	0.010343003	0.980508
7463041451	574630	4145100	0.925623057	0.007058535	0.932682
7464041451	574640	4145100	0.863148643	0.005122976	0.868272
7465041451	574650	4145100	0	0	0
7459041451	574590	4145110	0	0	0
7460041451	574600	4145110	0	0	0
7461041451	574610	4145110	0	0	0
7462041451	574620	4145110	0	0	0
7463041451	574630	4145110	0	0	0
7464041451	574640	4145110	0	0	0
7465041451	574650	4145110	0	0	0
7466041451	574660	4145110	0	0	0
7460041451	574600	4145120	0	0	0
7461041451	574610	4145120	0	0	0
7462041451	574620	4145120	0	0	0
7463041451	574630	4145120	0	0	0
7464041451	574640	4145120	0	0	0
7465041451	574650	4145120	0	0	0
7466041451	574660	4145120	0	0	0
7460041451	574600	4145130	0	0	0
7462041451	574620	4145130	0	0	0
7463041451	574630	4145130	0	0	0
7464041451	574640	4145130	0	0	0
7465041451	574650	4145130	0	0	0
7463041451	574630	4145140	0	0	0
7464041451	574640	4145140	0	0	0
7459041451	574590	4145150	0	0	0
7460041451	574600	4145150	0	0	0
7460041451	574600	4145160	0	0	0
7461041451	574610	4145160	0	0	0
7461041451	574610	4145170	0	0	0

Max GLC for Chronic Calcs

Max GLC: 0.118173

XY	X	Y	2025	2026	2027	2034	2035
57463041451	574630	4145110	0.002608	0.0071391	0		
57464041451	574640	4145110	0.0029636	0.0081163	0		
57465041451	574650	4145110	0.0033304	0.009109	0		
57466041451	574660	4145110	0.0038908	0.0105892	0		
57460041451	574600	4145120	0.0044618	0.0119281	0		
57461041451	574610	4145120	0.0055422	0.0136634	0		
57462041451	574620	4145120	0.0052142	0.0137851	0		
57463041451	574630	4145120	0.0049779	0.013549	0		
57464041451	574640	4145120	0.0047604	0.0130814	0		
57465041451	574650	4145120	0.0044424	0.0122734	0		
57466041451	574660	4145120	0.0040517	0.0112146	0		
57460041451	574600	4145130	0.0006565	0.0017279	0		
57462041451	574620	4145130	0.0007175	0.0018789	0		
57463041451	574630	4145130	0.0007798	0.0020481	0		
57464041451	574640	4145130	0.00085	0.002246	0		
57465041451	574650	4145130	0.0009294	0.0024661	0		
57463041451	574630	4145140	0.0010226	0.0027268	0		
57464041451	574640	4145140	0.0011292	0.0030218	0		
57459041451	574590	4145150	0.001255	0.0033709	0		
57460041451	574600	4145150	0.0014048	0.0037817	0		
57460041451	574600	4145160	0.0015819	0.0042684	0		
57461041451	574610	4145160	0.0017801	0.004815	0		
57461041451	574610	4145170	0.002008	0.005444	0		
57457041450	574570	4145030	0.0022713	0.0061695	0		
57463041450	574630	4145080	0.0025762	0.0070039	0		
57461041450	574610	4145090	0.0028449	0.0077228	0		
57462041450	574620	4145090	0.0032628	0.0088051	0		
57463041450	574630	4145090	0.0038188	0.009983	0		
57464041450	574640	4145090	0.0047369	0.0113789	0		
57460041451	574600	4145100	0.0042417	0.011216	0		
57461041451	574610	4145100	0.0041328	0.0112149	0		
57462041451	574620	4145100	0.0039898	0.0109325	0		
57463041451	574630	4145100	0.0037771	0.0104012	0		
57464041451	574640	4145100	0.0035069	0.0096839	0		
57465041451	574650	4145100	0	0	0		
57459041451	574590	4145110	0	0	0		
57460041451	574600	4145110	0	0	0		
57461041451	574610	4145110	0	0	0		
57462041451	574620	4145110	0	0	0		
57463041451	574630	4145110	0	0	0		
57464041451	574640	4145110	0	0	0		
57465041451	574650	4145110	0	0	0		
57466041451	574660	4145110	0	0	0		
57460041451	574600	4145120	0	0	0		
57461041451	574610	4145120	0	0	0		
57462041451	574620	4145120	0	0	0		
57463041451	574630	4145120	0	0	0		
57464041451	574640	4145120	0	0	0		
57465041451	574650	4145120	0	0	0		
57466041451	574660	4145120	0	0	0		
57460041451	574600	4145130	0	0	0		
57462041451	574620	4145130	0	0	0		
57463041451	574630	4145130	0	0	0		
57464041451	574640	4145130	0	0	0		
57465041451	574650	4145130	0	0	0		
57463041451	574630	4145140	0	0	0		
57464041451	574640	4145140	0	0	0		
57459041451	574590	4145150	0	0	0		
57460041451	574600	4145150	0	0	0		
57460041451	574600	4145160	0	0	0		
57461041451	574610	4145160	0	0	0		
57461041451	574610	4145170	0	0	0		

Garvey Reservoir Rehab - Unmitigated I/O Tower

Construction Modeling Assumptions

AERMOD Sources

Volume Sources		
Offroad Construction Exhaust		
Release Height	3.66	m
Emissions rate	1	g/s
Init Vert Dimension	3.4	m
Line Volume		
Onroad Hauling Exhaust		
Plume Height	7.315	m
Plume Width	20	m
Release Height	3.66	m
Emissions rate	1	g/s

Meteorology:

SCAQMD	Pico	Rivera	2010 - 2012, 2015 - 2016

SCAQMD Met Data

https://www.aqmd.gov/home/air-quality/meteorological-data/data-for-aermod

AERMOD Sources

Garvey Reservoir Rehab - Unmitigated I/O Tower

Health Risk Assessment Risk Factors

Residential Risk	Abbreviation	UOM	3rd Trimester	0<2	2<16	16<30
Daily Breathing Rate (95th %'ile)	DBR	L/kg-day	361	1090	572	261
Fraction Of Time At Home [a]	FAH	unitless	1	1	1	0.73
Exposure Frequency	EF	days/year	0.96	0.96	0.96	0.96
Age Sensitivity Factor	ASF	unitless	10	10	3	1
Inhalation Absorption Factor	A	unitless	1	1	1	1
Conversion Factor	CF_1	m^3/L	0.001	0.001	0.001	0.001
Conversion Factor	CF_2	$\mu g/m^3$	0.001	0.001	0.001	0.001
Cancer Potency Factor (diesel exhaust)	CPF	$mg/kg\text{-}day^{-1}$	1.1	1.1	1.1	1.1
Averaging Time (for residential exposure)	AT	years	70.00	70.00	70.00	70.00

[a] assume school or daycare will have cancer risk of >1 per million

Garvey Reservoir Rehab - Unmitigated I/O Tower

Health Risk Assessment Exposure Duration Assumptions for Offroad Equipment

Residential Receptors

			Start Date	*11/1/2025*	*1/31/2026*
			End Date	*1/30/2026*	*1/31/2028*
	11/1/2025	*7/31/2026*	*Days*	*90*	*730*
Phase	Start Date	End Date	Duration (days)	3rd Tri	0<2
Demolition - 2025			1	0	0
Demolition - 2026			1	0	0
Site Preparation - 2025			1	0	0
Site Preparation - 2026			1	0	0
Grading - 2025			1	0	0
Grading - 2026			1	0	0
Infrastructure - 2025	11/1/2025	12/31/2025	61	61	0
Infrastructure - 2026	1/1/2026	7/31/2026	212	30	182
Paving - 2025			1	0	0
Architectural Coating - 2026			1	0	0

			Intake Factor for Inhalation, IF (m^3/kg-day)			Risk Calculation Part 1, R1		
Phase	Year	Year	Equation	3rd Trimester	0<2	Equation	3rd Trimester	0<2
Demolition - 2025		1900		0	0		0	0
Demolition - 2026		1900	$\frac{DBR \cdot FAH \cdot EF \cdot ED \cdot ASF \cdot A \cdot CF_1}{AT}$	0	0		0	0
Site Preparation - 2025		1900		0	0		0	0
Site Preparation - 2026		1900		0	0		0	0
Grading - 2025		1900		0	0	$IF \cdot CPF \cdot CF_2$	0	0
Grading - 2026		1900		0	0		0	0
Infrastructure - 2025		2025		0.00826459	0		9.09105E-06	0
Infrastructure - 2026		2026		0.004064552	0.074452993		4.47101E-06	8.18983E-05
Paving - 2025		1900		0	0		0	0
Architectural Coating - 2026		1900		0	0		0	0

Exposure Durations

Garvey Reservoir Rehab - Unmitigated I/O Tower

Offroad DPM Emissions, Ground Level Concentrations and Health Risk Calculations

Residential Receptors

Phase	Year	Emissions (lbs/day)	Work Hours Per Day	Emissions (g/s)
Demolition - 2025	1900		10	0
Demolition - 2026	1900		10	0
Site Preparation - 2025	1900		10	0
Site Preparation - 2026	1900		10	0
Grading - 2025	1900		10	0
Grading - 2026	1900		10	0
Infrastructure - 2025	2025	0.710	10	0.008945803
Infrastructure - 2026	2026	1.980	10	0.02494745
Paving - 2025	1900		10	0
Architectural Coating - 2026	1900		10	0

		AERMOD Column Identifier:	*4*	*4*	*4*	*4*	*4*	*4*	*4*	*4*	*4*	*4*				
Garvey Reservoir Rehab - Unmitigated I/O Tower			Demolition - 2025	Demolition - 2026	ite Preparation - 202	ite Preparation - 202	Grading - 2025	Grading - 2026	nfrastructure - 202	nfrastructure - 202	Paving - 2025	itectural Coating -	Child Risk			
Unique Identifier	X (UTM)	Y (UTM)	1900	1900	1900	1900	1900	1900	2025	2026	1900	1900	3rd Trimester	0<2	Total	per million
396166.283767377.2	396166.28	3767377	0	0	0	0	0	0	0.000389769	0.00108696	0	0	8.40321E-09	8.90202E-08	9.74234E-08	0.0974234
396266.283767377.2	396266.28	3767377	0	0	0	0	0	0	0.000430919	0.001201719	0	0	9.2904E-09	9.84187E-08	1.07709E-07	0.1077091
396366.283767377.2	396366.28	3767377	0	0	0	0	0	0	0.000492735	0.001374106	0	0	1.06231E-08	1.12537E-07	1.2316E-07	0.12316
396466.283767377.2	396466.28	3767377	0	0	0	0	0	0	0.000553119	0.001542501	0	0	1.1925E-08	1.26328E-07	1.38253E-07	0.1382531
396566.283767377.2	396566.28	3767377	0	0	0	0	0	0	0.000624954	0.001742829	0	0	1.34737E-08	1.42735E-07	1.56208E-07	0.1562084
396666.283767377.2	396666.28	3767377	0	0	0	0	0	0	0.000673798	0.001879042	0	0	1.45267E-08	1.5389E-07	1.68417E-07	0.1684171
396766.283767377.2	396766.28	3767377	0	0	0	0	0	0	0.000705198	0.001966607	0	0	1.52037E-08	1.61062E-07	1.76265E-07	0.1762655
396866.283767377.2	396866.28	3767377	0	0	0	0	0	0	0.000736418	0.002053674	0	0	1.58768E-08	1.68192E-07	1.84069E-07	0.1840692
396966.283767377.2	396966.28	3767377	0	0	0	0	0	0	0.000782042	0.002180906	0	0	1.68604E-08	1.78612E-07	1.95473E-07	0.1954729
397066.283767377.2	397066.28	3767377	0	0	0	0	0	0	0.000807895	0.002253004	0	0	1.74178E-08	1.84517E-07	2.01935E-07	0.201935
397166.283767377.2	397166.28	3767377	0	0	0	0	0	0	0.000801544	0.002235292	0	0	1.72809E-08	1.83067E-07	2.00347E-07	0.2003474
397266.283767377.2	397266.28	3767377	0	0	0	0	0	0	0.000771933	0.002152715	0	0	1.66425E-08	1.76304E-07	1.92946E-07	0.1929462
397366.283767377.2	397366.28	3767377	0	0	0	0	0	0	0.000760572	0.002121032	0	0	1.63975E-08	1.73709E-07	1.90106E-07	0.1901065
397466.283767377.2	397466.28	3767377	0	0	0	0	0	0	0.000735256	0.002050431	0	0	1.58517E-08	1.67927E-07	1.83779E-07	0.1837785
397566.283767377.2	397566.28	3767377	0	0	0	0	0	0	0.00068337	0.001905736	0	0	1.47331E-08	1.56076E-07	1.7081E-07	0.1708096
397666.283767377.2	397666.28	3767377	0	0	0	0	0	0	0.000626922	0.001748317	0	0	1.35161E-08	1.43184E-07	1.567E-07	0.1567003
397766.283767377.2	397766.28	3767377	0	0	0	0	0	0	0.000554461	0.001546243	0	0	1.19539E-08	1.26635E-07	1.38589E-07	0.1385886
397866.283767377.2	397866.28	3767377	0	0	0	0	0	0	0.000497387	0.001387078	0	0	1.07234E-08	1.13599E-07	1.24323E-07	0.1243227
396166.283767477.2	396166.28	3767477	0	0	0	0	0	0	0.000418306	0.001166543	0	0	9.01846E-09	9.55379E-08	1.04556E-07	0.1045563
396266.283767477.2	396266.28	3767477	0	0	0	0	0	0	0.000461246	0.001286291	0	0	9.94422E-09	1.05345E-07	1.15289E-07	0.1152892
396366.283767477.2	396366.28	3767477	0	0	0	0	0	0	0.000539879	0.001505579	0	0	1.16395E-08	1.23304E-07	1.34944E-07	0.1349438
396466.283767477.2	396466.28	3767477	0	0	0	0	0	0	0.000623522	0.001738837	0	0	1.34428E-08	1.42408E-07	1.55851E-07	0.1558506
396566.283767477.2	396566.28	3767477	0	0	0	0	0	0	0.000711996	0.001985568	0	0	1.53503E-08	1.62615E-07	1.77965E-07	0.1779649
396666.283767477.2	396666.28	3767477	0	0	0	0	0	0	0.000792061	0.002208847	0	0	1.70764E-08	1.80901E-07	1.97977E-07	0.1979773
396766.283767477.2	396766.28	3767477	0	0	0	0	0	0	0.000863538	0.002408177	0	0	1.86174E-08	1.97226E-07	2.15843E-07	0.2158431
396866.283767477.2	396866.28	3767477	0	0	0	0	0	0	0.000926696	0.002584306	0	0	1.99791E-08	2.1165E-07	2.31629E-07	0.2316294
396966.283767477.2	396966.28	3767477	0	0	0	0	0	0	0.001000677	0.002790622	0	0	2.15741E-08	2.28547E-07	2.50121E-07	0.2501213
397066.283767477.2	397066.28	3767477	0	0	0	0	0	0	0.001048448	0.002923841	0	0	2.2604E-08	2.39458E-07	2.62062E-07	0.2620616
397166.283767477.2	397166.28	3767477	0	0	0	0	0	0	0.001050327	0.00292908	0	0	2.26445E-08	2.39887E-07	2.62531E-07	0.2625312
397266.283767477.2	397266.28	3767477	0	0	0	0	0	0	0.001012486	0.002823552	0	0	2.18287E-08	2.31244E-07	2.53073E-07	0.2530728
397366.283767477.2	397366.28	3767477	0	0	0	0	0	0	0.000972319	0.002711538	0	0	2.09627E-08	2.2207E-07	2.43033E-07	0.2430331
397466.283767477.2	397466.28	3767477	0	0	0	0	0	0	0.000929737	0.002592788	0	0	2.00447E-08	2.12345E-07	2.3239E-07	0.2323896
397566.283767477.2	397566.28	3767477	0	0	0	0	0	0	0.000851193	0.00237375	0	0	1.83513E-08	1.94406E-07	2.12757E-07	0.2127574
397666.283767477.2	397666.28	3767477	0	0	0	0	0	0	0.000760035	0.002119535	0	0	1.6386E-08	1.73586E-07	1.89972E-07	0.1899723
397766.283767477.2	397766.28	3767477	0	0	0	0	0	0	0.000670041	0.001868564	0	0	1.44457E-08	1.53032E-07	1.67478E-07	0.1674779
397866.283767477.2	397866.28	3767477	0	0	0	0	0	0	0.000588187	0.001640295	0	0	1.2681E-08	1.34337E-07	1.47018E-07	0.1470183
396166.283767577.2	396166.28	3767577	0	0	0	0	0	0	0.000436913	0.001218433	0	0	9.41962E-09	9.97876E-08	1.09207E-07	0.1092072
396266.283767577.2	396266.28	3767577	0	0	0	0	0	0	0.000493898	0.001377349	0	0	1.06482E-08	1.12803E-07	1.23451E-07	0.1234507
396366.283767577.2	396366.28	3767577	0	0	0	0	0	0	0.000576915	0.001608861	0	0	1.2438E-08	1.31763E-07	1.44201E-07	0.144201
396466.283767577.2	396466.28	3767577	0	0	0	0	0	0	0.000683996	0.001907482	0	0	1.47466E-08	1.5622E-07	1.70966E-07	0.1709661
396566.283767577.2	396566.28	3767577	0	0	0	0	0	0	0.000813352	0.002268222	0	0	1.75355E-08	1.85764E-07	2.03299E-07	0.203299

Garvey Reservoir Rehab - Unmitigated I/O Tower			Demolition - 2025	Demolition - 2026	ite Preparation - 202	te Preparation - 202	Grading - 2025	Grading - 2026	nfrastructure - 202	nfrastructure - 202	Paving - 2025	itectural Coating -	Child Risk			
Unique Identifier	X (UTM)	Y (UTM)	1900	1900	1900	1900	1900	1900	2025	2026	1900	1900	3rd Trimester	0<2	Total	per million
396666.283767577.2	396666.28	3767577	0	0	0	0	0	0	0.00095577	0.002665386	0	0	2.06059E-08	2.18291E-07	2.38896E-07	0.2388964
396766.283767577.2	396766.28	3767577	0	0	0	0	0	0	0.001052384	0.002934818	0	0	2.26889E-08	2.40357E-07	2.63045E-07	0.2630455
396866.283767577.2	396866.28	3767577	0	0	0	0	0	0	0.001200616	0.003348197	0	0	2.58847E-08	2.74212E-07	3.00096E-07	0.3000963
396966.283767577.2	396966.28	3767577	0	0	0	0	0	0	0.001318522	0.003677005	0	0	2.84267E-08	3.0114E-07	3.29567E-07	0.3295671
397066.283767577.2	397066.28	3767577	0	0	0	0	0	0	0.001400644	0.003906022	0	0	3.01972E-08	3.19897E-07	3.50094E-07	0.3500937
397166.283767577.2	397166.28	3767577	0	0	0	0	0	0	0.001436338	0.004005563	0	0	3.09667E-08	3.28049E-07	3.59015E-07	0.3590155
397266.283767577.2	397266.28	3767577	0	0	0	0	0	0	0.001391251	0.003879827	0	0	2.99947E-08	3.17751E-07	3.47746E-07	0.3477459
397366.283767577.2	397366.28	3767577	0	0	0	0	0	0	0.001306982	0.003644822	0	0	2.81779E-08	2.98505E-07	3.26683E-07	0.3266826
397466.283767577.2	397466.28	3767577	0	0	0	0	0	0	0.001225843	0.003418549	0	0	2.64286E-08	2.79973E-07	3.06402E-07	0.3064019
397566.283767577.2	397566.28	3767577	0	0	0	0	0	0	0.001086915	0.003031115	0	0	2.34333E-08	2.48243E-07	2.71676E-07	0.2716765
397666.283767577.2	397666.28	3767577	0	0	0	0	0	0	0.000943156	0.00263021	0	0	2.0334E-08	2.1541E-07	2.35744E-07	0.2357436
397766.283767577.2	397766.28	3767577	0	0	0	0	0	0	0.000806643	0.002249512	0	0	1.73908E-08	1.84231E-07	2.01622E-07	0.201622
397866.283767577.2	397866.28	3767577	0	0	0	0	0	0	0.000689364	0.00192245	0	0	1.48623E-08	1.57445E-07	1.72308E-07	0.1723077
396166.283767677.2	396166.28	3767677	0	0	0	0	0	0	0.000459904	0.001282548	0	0	9.91529E-09	1.05039E-07	1.14954E-07	0.1149538
396266.283767677.2	396266.28	3767677	0	0	0	0	0	0	0.000525655	0.001465912	0	0	1.13329E-08	1.20056E-07	1.31389E-07	0.1313886
396366.283767677.2	396366.28	3767677	0	0	0	0	0	0	0.000624059	0.001740334	0	0	1.34544E-08	1.4253E-07	1.55985E-07	0.1559848
396466.283767677.2	396466.28	3767677	0	0	0	0	0	0	0.000756904	0.002110804	0	0	1.63185E-08	1.72871E-07	1.8919E-07	0.1891897
396566.283767677.2	396566.28	3767677	0	0	0	0	0	0	0.000914887	0.002551376	0	0	1.97245E-08	2.08953E-07	2.28678E-07	0.2286778
396666.283767677.2	396666.28	3767677	0	0	0	0	0	0	0.001074928	0.002997686	0	0	2.31749E-08	2.45505E-07	2.6868E-07	0.2686802
396766.283767677.2	396766.28	3767677	0	0	0	0	0	0	0.00131396	0.003664281	0	0	2.83283E-08	3.00098E-07	3.28427E-07	0.3284267
396866.283767677.2	396866.28	3767677	0	0	0	0	0	0	0.001612302	0.004496279	0	0	3.47604E-08	3.68238E-07	4.02998E-07	0.402998
396966.283767677.2	396966.28	3767677	0	0	0	0	0	0	0.001893379	0.005280128	0	0	4.08203E-08	4.32433E-07	4.73254E-07	0.4732537
397066.283767677.2	397066.28	3767677	0	0	0	0	0	0	0.002038391	0.005684526	0	0	4.39467E-08	4.65553E-07	5.095E-07	0.5094996
397166.283767677.2	397166.28	3767677	0	0	0	0	0	0	0.002098149	0.005851175	0	0	4.5235E-08	4.79201E-07	5.24436E-07	0.5244363
397266.283767677.2	397266.28	3767677	0	0	0	0	0	0	0.002091887	0.005833712	0	0	4.51E-08	4.77771E-07	5.22871E-07	0.522871
397366.283767677.2	397366.28	3767677	0	0	0	0	0	0	0.001884612	0.005255679	0	0	4.06313E-08	4.30431E-07	4.71062E-07	0.4710624
397466.283767677.2	397466.28	3767677	0	0	0	0	0	0	0.001704623	0.004753737	0	0	3.67508E-08	3.89323E-07	4.26074E-07	0.4260737
397566.283767677.2	397566.28	3767677	0	0	0	0	0	0	0.001434102	0.003999326	0	0	3.09185E-08	3.27538E-07	3.58456E-07	0.3584565
397666.283767677.2	397666.28	3767677	0	0	0	0	0	0	0.00118514	0.003305038	0	0	2.5551E-08	2.70677E-07	2.96228E-07	0.296228
397766.283767677.2	397766.28	3767677	0	0	0	0	0	0	0.000975361	0.00272002	0	0	2.10283E-08	2.22765E-07	2.43793E-07	0.2437933
397866.283767677.2	397866.28	3767677	0	0	0	0	0	0	0.000803333	0.002240281	0	0	1.73195E-08	1.83475E-07	2.00795E-07	0.2007946
396166.283767777.2	396166.28	3767777	0	0	0	0	0	0	0.000476543	0.001328951	0	0	1.0274E-08	1.08839E-07	1.19113E-07	0.1191128
396266.283767777.2	396266.28	3767777	0	0	0	0	0	0	0.000561886	0.001566949	0	0	1.2114E-08	1.2833E-07	1.40444E-07	0.1404444
396366.283767777.2	396366.28	3767777	0	0	0	0	0	0	0.000666462	0.001858585	0	0	1.43686E-08	1.52215E-07	1.66584E-07	0.1665835
396466.283767777.2	396466.28	3767777	0	0	0	0	0	0	0.000811921	0.002264231	0	0	1.75046E-08	1.85437E-07	2.02941E-07	0.2029412
396566.283767777.2	396566.28	3767777	0	0	0	0	0	0	0.000988064	0.002755446	0	0	2.13022E-08	2.25666E-07	2.46968E-07	0.2469685
396666.283767777.2	396666.28	3767777	0	0	0	0	0	0	0.001242035	0.003463704	0	0	2.67777E-08	2.83671E-07	3.10449E-07	0.3104491
396766.283767777.2	396766.28	3767777	0	0	0	0	0	0	0.001640481	0.004574863	0	0	3.53679E-08	3.74673E-07	4.10041E-07	0.4100414
396866.283767777.2	396866.28	3767777	0	0	0	0	0	0	0.002173293	0.006060734	0	0	4.68551E-08	4.96364E-07	5.43219E-07	0.5432188
396966.283767777.2	396966.28	3767777	0	0	0	0	0	0	0.002769889	0.007724479	0	0	5.97174E-08	6.32622E-07	6.92339E-07	0.692339
397066.283767777.2	397066.28	3767777	0	0	0	0	0	0	0.003235071	0.009021746	0	0	6.97465E-08	7.38866E-07	8.08612E-07	0.8086121
397166.283767777.2	397166.28	3767777	0	0	0	0	0	0	0.003424632	0.009550383	0	0	7.38333E-08	7.8216E-07	8.55993E-07	0.8559934
397266.283767777.2	397266.28	3767777	0	0	0	0	0	0	0.003405488	0.009496995	0	0	7.34206E-08	7.77788E-07	8.51208E-07	0.8512083
397366.283767777.2	397366.28	3767777	0	0	0	0	0	0	0.002973674	0.008292782	0	0	6.41109E-08	6.79165E-07	7.43276E-07	0.7432756
397466.283767777.2	397466.28	3767777	0	0	0	0	0	0	0.002490243	0.006944622	0	0	5.36884E-08	5.68753E-07	6.22441E-07	0.622441
397566.283767777.2	397566.28	3767777	0	0	0	0	0	0	0.001951348	0.005441787	0	0	4.20701E-08	4.45673E-07	4.87743E-07	0.4877432
397666.283767777.2	397666.28	3767777	0	0	0	0	0	0	0.001505221	0.004197658	0	0	3.24518E-08	3.43781E-07	3.76233E-07	0.3762328
397766.283767777.2	397766.28	3767777	0	0	0	0	0	0	0.001182277	0.003297055	0	0	2.54893E-08	2.70023E-07	2.95512E-07	0.2955125
397866.283767777.2	397866.28	3767777	0	0	0	0	0	0	0.000941725	0.002626218	0	0	2.03031E-08	2.15083E-07	2.35386E-07	0.2353859
396166.283767877.2	396166.28	3767877	0	0	0	0	0	0	0.000488172	0.001361382	0	0	1.05248E-08	1.11495E-07	1.2202E-07	0.1220196
396266.283767877.2	396266.28	3767877	0	0	0	0	0	0	0.000580404	0.001618591	0	0	1.25132E-08	1.3256E-07	1.45073E-07	0.145073
396366.283767877.2	396366.28	3767877	0	0	0	0	0	0	0.000700099	0.001952387	0	0	1.50938E-08	1.59897E-07	1.74991E-07	0.174991
396466.283767877.2	396466.28	3767877	0	0	0	0	0	0	0.000854771	0.002383729	0	0	1.84284E-08	1.95223E-07	2.13652E-07	0.2136518
396566.283767877.2	396566.28	3767877	0	0	0	0	0	0	0.001067145	0.002975981	0	0	2.30071E-08	2.43728E-07	2.66735E-07	0.2667349
397466.283767877.2	397466.28	3767877	0	0	0	0	0	0	0.003784611	0.010554268	0	0	8.15943E-08	8.64377E-07	9.45971E-07	0.9459708
397566.283767877.2	397566.28	3767877	0	0	0	0	0	0	0.002700469	0.007530887	0	0	5.82208E-08	6.16767E-07	6.74988E-07	0.6749875
397666.283767877.2	397666.28	3767877	0	0	0	0	0	0	0.001927105	0.00537418	0	0	4.15474E-08	4.40136E-07	4.81684E-07	0.4816835
397766.283767877.2	397766.28	3767877	0	0	0	0	0	0	0.001423188	0.00396889	0	0	3.06832E-08	3.25045E-07	3.55729E-07	0.3557285
397866.283767877.2	397866.28	3767877	0	0	0	0	0	0	0.001078774	0.003008413	0	0	2.32578E-08	2.46384E-07	2.69642E-07	0.2696417
396166.283767977.2	396166.28	3767977	0	0	0	0	0	0	0.000490677	0.001368368	0	0	1.05788E-08	1.12067E-07	1.22646E-07	0.1226457
396266.283767977.2	396266.28	3767977	0	0	0	0	0	0	0.000588365	0.001640794	0	0	1.26849E-08	1.34378E-07	1.47063E-07	0.1470631
396366.283767977.2	396366.28	3767977	0	0	0	0	0	0	0.000714949	0.0019938	0	0	1.54139E-08	1.63289E-07	1.78703E-07	0.1787028
396466.283767977.2	396466.28	3767977	0	0	0	0	0	0	0.00087812	0.002448842	0	0	1.89318E-08	2.00556E-07	2.19488E-07	0.2194878
397466.283767977.2	397466.28	3767977	0	0	0	0	0	0	0.00624587	0.01741806	0	0	1.34658E-07	1.42651E-06	1.56117E-06	1.5611672
397566.283767977.2	397566.28	3767977	0	0	0	0	0	0	0.003666616	0.010225211	0	0	7.90504E-08	8.37427E-07	9.16478E-07	0.9164777
397666.283767977.2	397666.28	3767977	0	0	0	0	0	0	0.002371353	0.00661307	0	0	5.11252E-08	5.41599E-07	5.92724E-07	0.5927243
397766.283767977.2	397766.28	3767977	0	0	0	0	0	0	0.001648264	0.004596568	0	0	3.55357E-08	3.76451E-07	4.11987E-07	0.4119868
397866.283767977.2	397866.28	3767977	0	0	0	0	0	0	0.001185766	0.003306784	0	0	2.55645E-08	2.7082E-07	2.96385E-07	0.2963845
396166.283768077.2	396166.28	3768077	0	0	0	0	0	0	0.000500339	0.001395311	0	0	1.0787E-08	1.14274E-07	1.25061E-07	0.1250606

Garvey Reservoir Rehab - Unmitigated I/O Tower			Demolition - 2025	Demolition - 2026	ite Preparation - 202	te Preparation - 202	Grading - 2025	Grading - 2026	nfrastructure - 202	nfrastructure - 202	Paving - 2025	itectural Coating -	Child Risk			
Unique Identifier	X (UTM)	Y (UTM)	1900	1900	1900	1900	1900	1900	2025	2026	1900	1900	3rd Trimester	0<2	Total	per million
396266.283768077.2	396266.28	3768077	0	0	0	0	0	0	0.000588902	0.001642291	0	0	1.26964E-08	1.34501E-07	1.47197E-07	0.1471972
396366.283768077.2	396366.28	3768077	0	0	0	0	0	0	0.000717185	0.002000037	0	0	1.54621E-08	1.638E-07	1.79262E-07	0.1792618
396466.283768077.2	396466.28	3768077	0	0	0	0	0	0	0.000899411	0.002508217	0	0	1.93908E-08	2.05419E-07	2.2481E-07	0.2248095
397466.283768077.2	397466.28	3768077	0	0	0	0	0	0	0.009714426	0.027090935	0	0	2.09438E-07	2.2187E-06	2.42814E-06	2.4281394
397566.283768077.2	397566.28	3768077	0	0	0	0	0	0	0.00476525	0.013289008	0	0	1.02736E-07	1.08835E-06	1.19108E-06	1.1910834
397666.283768077.2	397666.28	3768077	0	0	0	0	0	0	0.002833494	0.007901855	0	0	6.10887E-08	6.47148E-07	7.08237E-07	0.7082371
397766.283768077.2	397766.28	3768077	0	0	0	0	0	0	0.00188989	0.005270398	0	0	4.07451E-08	4.31637E-07	4.72382E-07	0.4723817
397866.283768077.2	397866.28	3768077	0	0	0	0	0	0	0.001327915	0.003703199	0	0	2.86292E-08	3.03286E-07	3.31915E-07	0.3319149
396166.283768177.2	396166.28	3768177	0	0	0	0	0	0	0.000498907	0.001391319	0	0	1.07562E-08	1.13947E-07	1.24703E-07	0.1247029
396266.283768177.2	396266.28	3768177	0	0	0	0	0	0	0.000590781	0.00164753	0	0	1.27369E-08	1.3493E-07	1.47667E-07	0.1476668
396366.283768177.2	396366.28	3768177	0	0	0	0	0	0	0.000719511	0.002006523	0	0	1.55123E-08	1.64331E-07	1.79843E-07	0.1798431
396466.283768177.2	396466.28	3768177	0	0	0	0	0	0	0.000894044	0.002493248	0	0	1.92751E-08	2.04193E-07	2.23468E-07	0.2234679
397466.283768177.2	397466.28	3768177	0	0	0	0	0	0	0.012978123	0.036192513	0	0	2.79802E-07	2.96411E-06	3.24391E-06	3.2439068
397566.283768177.2	397566.28	3768177	0	0	0	0	0	0	0.005789008	0.016143994	0	0	1.24808E-07	1.32217E-06	1.44697E-06	1.4469736
397666.283768177.2	397666.28	3768177	0	0	0	0	0	0	0.003236681	0.009026237	0	0	6.97812E-08	7.39233E-07	8.09015E-07	0.8090146
397766.283768177.2	397766.28	3768177	0	0	0	0	0	0	0.002118098	0.005906808	0	0	4.56651E-08	4.83757E-07	5.29423E-07	0.5294226
397866.283768177.2	397866.28	3768177	0	0	0	0	0	0	0.001438843	0.004012548	0	0	3.10207E-08	3.28621E-07	3.59642E-07	0.3596415
396166.283768277.2	396166.28	3768277	0	0	0	0	0	0	0.000491482	0.001370613	0	0	1.05961E-08	1.12251E-07	1.22847E-07	0.122847
396266.283768277.2	396266.28	3768277	0	0	0	0	0	0	0.000576199	0.001606865	0	0	1.24226E-08	1.316E-07	1.44022E-07	0.1440221
396366.283768277.2	396366.28	3768277	0	0	0	0	0	0	0.00069983	0.001951639	0	0	1.5088E-08	1.59836E-07	1.74924E-07	0.1749239
396466.283768277.2	396466.28	3768277	0	0	0	0	0	0	0.00086828	0.002421399	0	0	1.87197E-08	1.98308E-07	2.17028E-07	0.2170282
397366.283768277.2	397366.28	3768277	0	0	0	0	0	0	0.033647848	0.093834844	0	0	7.25431E-07	7.68491E-06	8.41034E-06	8.410344
397466.283768277.2	397466.28	3768277	0	0	0	0	0	0	0.01360594	0.037943325	0	0	2.93337E-07	3.10749E-06	3.40083E-06	3.4008307
397566.283768277.2	397566.28	3768277	0	0	0	0	0	0	0.006701569	0.018688883	0	0	1.44482E-07	1.53059E-06	1.67507E-06	1.6750701
397666.283768277.2	397666.28	3768277	0	0	0	0	0	0	0.003674667	0.010247664	0	0	7.9224E-08	8.39266E-07	9.1849E-07	0.9184902
397766.283768277.2	397766.28	3768277	0	0	0	0	0	0	0.002307391	0.006434696	0	0	4.97462E-08	5.26991E-07	5.76737E-07	0.5767368
397866.283768277.2	397866.28	3768277	0	0	0	0	0	0	0.001617133	0.004509751	0	0	3.48646E-08	3.69341E-07	4.04205E-07	0.4042054
396166.283768377.2	396166.28	3768377	0	0	0	0	0	0	0.000475559	0.001326206	0	0	1.02528E-08	1.08614E-07	1.18867E-07	0.1188669
396266.283768377.2	396266.28	3768377	0	0	0	0	0	0	0.000558576	0.001557719	0	0	1.20426E-08	1.27575E-07	1.39617E-07	0.1396171
396366.283768377.2	396366.28	3768377	0	0	0	0	0	0	0.000671919	0.001873803	0	0	1.44862E-08	1.53461E-07	1.67948E-07	0.1679475
396466.283768377.2	396466.28	3768377	0	0	0	0	0	0	0.000827666	0.002308138	0	0	1.78441E-08	1.89033E-07	2.06877E-07	0.2068766
397266.283768377.2	397266.28	3768377	0	0	0	0	0	0	0.021481109	0.059905064	0	0	4.63122E-07	4.90612E-06	5.36924E-06	5.3692443
397366.283768377.2	397366.28	3768377	0	0	0	0	0	0	0.018047531	0.050329734	0	0	3.89096E-07	4.12192E-06	4.51101E-06	4.5110149
397466.283768377.2	397466.28	3768377	0	0	0	0	0	0	0.011166867	0.031141403	0	0	2.40752E-07	2.55043E-06	2.79118E-06	2.7911797
397566.283768377.2	397566.28	3768377	0	0	0	0	0	0	0.006656751	0.018563896	0	0	1.43516E-07	1.52035E-06	1.66387E-06	1.6638676
397666.283768377.2	397666.28	3768377	0	0	0	0	0	0	0.004053075	0.011302941	0	0	8.73822E-08	9.25692E-07	1.01307E-06	1.0130738
397766.283768377.2	397766.28	3768377	0	0	0	0	0	0	0.002596251	0.007240249	0	0	5.59739E-08	5.92964E-07	6.48938E-07	0.6489379
397866.283768377.2	397866.28	3768377	0	0	0	0	0	0	0.001830759	0.005105496	0	0	3.94702E-08	4.18131E-07	4.57602E-07	0.4576016
396166.283768477.2	396166.28	3768477	0	0	0	0	0	0	0.000456594	0.001273318	0	0	9.84393E-09	1.04283E-07	1.14126E-07	0.1141265
396266.283768477.2	396266.28	3768477	0	0	0	0	0	0	0.00053639	0.001495849	0	0	1.15643E-08	1.22507E-07	1.34072E-07	0.1340718
396366.283768477.2	396366.28	3768477	0	0	0	0	0	0	0.000639983	0.001784741	0	0	1.37977E-08	1.46167E-07	1.59965E-07	0.1599649
396466.283768477.2	396466.28	3768477	0	0	0	0	0	0	0.000772381	0.002153963	0	0	1.66521E-08	1.76406E-07	1.93058E-07	0.193058
397166.283768477.2	397166.28	3768477	0	0	0	0	0	0	0.007538002	0.02102147	0	0	1.62515E-07	1.72162E-06	1.88414E-06	1.884138
397266.283768477.2	397266.28	3768477	0	0	0	0	0	0	0.01045648	0.029160326	0	0	2.25436E-07	2.38818E-06	2.61362E-06	2.6136173
397366.283768477.2	397366.28	3768477	0	0	0	0	0	0	0.01034922	0.028861206	0	0	2.23124E-07	2.36368E-06	2.58681E-06	2.5868074
397466.283768477.2	397466.28	3768477	0	0	0	0	0	0	0.008041561	0.022425762	0	0	1.73372E-07	1.83663E-06	2.01E-06	2.0100036
397566.283768477.2	397566.28	3768477	0	0	0	0	0	0	0.005459802	0.015225928	0	0	1.17711E-07	1.24698E-06	1.36469E-06	1.364688
397666.283768477.2	397666.28	3768477	0	0	0	0	0	0	0.00370392	0.010329242	0	0	7.98546E-08	8.45947E-07	9.25802E-07	0.9258019
397766.283768477.2	397766.28	3768477	0	0	0	0	0	0	0.002664955	0.007431845	0	0	5.74551E-08	6.08655E-07	6.66111E-07	0.6661105
397866.283768477.2	397866.28	3768477	0	0	0	0	0	0	0.00187996	0.005242707	0	0	4.0531E-08	4.29369E-07	4.699E-07	0.4698997
396166.283768577.2	396166.28	3768577	0	0	0	0	0	0	0.000431903	0.001204463	0	0	9.31162E-09	9.86435E-08	1.07955E-07	0.1079551
396266.283768577.2	396266.28	3768577	0	0	0	0	0	0	0.000496671	0.001385082	0	0	1.0708E-08	1.13436E-07	1.24144E-07	0.1241439
396366.283768577.2	396366.28	3768577	0	0	0	0	0	0	0.000593017	0.001653766	0	0	1.27852E-08	1.35441E-07	1.48226E-07	0.1482258
396466.283768577.2	396466.28	3768577	0	0	0	0	0	0	0.00071137	0.001983821	0	0	1.53368E-08	1.62472E-07	1.77808E-07	0.1778084
396566.283768577.2	396566.28	3768577	0	0	0	0	0	0	0.000874452	0.002438613	0	0	1.88527E-08	1.99718E-07	2.18571E-07	0.218571
396866.283768577.2	396866.28	3768577	0	0	0	0	0	0	0.001865558	0.005202541	0	0	4.02205E-08	4.26079E-07	4.663E-07	0.4662997
396966.283768577.2	396966.28	3768577	0	0	0	0	0	0	0.002533362	0.007064868	0	0	5.4618E-08	5.78601E-07	6.33219E-07	0.6332187
397066.283768577.2	397066.28	3768577	0	0	0	0	0	0	0.003454243	0.009632959	0	0	7.44717E-08	7.88923E-07	8.63395E-07	0.8633946
397166.283768577.2	397166.28	3768577	0	0	0	0	0	0	0.004746375	0.013236369	0	0	1.02329E-07	1.08404E-06	1.18637E-06	1.1863654
397266.283768577.2	397266.28	3768577	0	0	0	0	0	0	0.005896	0.016442365	0	0	1.27115E-07	1.3466E-06	1.47372E-06	1.4737164
397366.283768577.2	397366.28	3768577	0	0	0	0	0	0	0.006293641	0.017551279	0	0	1.35688E-07	1.43742E-06	1.57311E-06	1.5731075
397466.283768577.2	397466.28	3768577	0	0	0	0	0	0	0.005522512	0.015400809	0	0	1.19063E-07	1.2613E-06	1.38036E-06	1.3803626
397566.283768577.2	397566.28	3768577	0	0	0	0	0	0	0.004332273	0.012081551	0	0	9.34016E-08	9.89458E-07	1.08286E-06	1.08286
397666.283768577.2	397666.28	3768577	0	0	0	0	0	0	0.003233908	0.009018503	0	0	6.97214E-08	7.386E-07	8.08321E-07	0.8083214
397766.283768577.2	397766.28	3768577	0	0	0	0	0	0	0.002377884	0.006631282	0	0	5.1266E-08	5.43091E-07	5.94357E-07	0.5943566
397866.283768577.2	397866.28	3768577	0	0	0	0	0	0	0.001796943	0.005011194	0	0	3.87412E-08	4.10408E-07	4.49149E-07	0.4491494
396166.283768677.2	396166.28	3768677	0	0	0	0	0	0	0.000407034	0.001135109	0	0	8.77545E-09	9.29635E-08	1.01739E-07	0.1017389
396266.283768677.2	396266.28	3768677	0	0	0	0	0	0	0.00047037	0.001311737	0	0	1.01409E-08	1.07429E-07	1.1757E-07	0.11757
396366.283768677.2	396366.28	3768677	0	0	0	0	0	0	0.00054963	0.001532771	0	0	1.18497E-08	1.25531E-07	1.37381E-07	0.1373811

Garvey Reservoir Rehab - Unmitigated I/O Tower			Demolition - 2025	Demolition - 2026	ite Preparation - 202	te Preparation - 202	Grading - 2025	Grading - 2026	nfrastructure - 202	nfrastructure - 202	Paving - 2025	itectural Coating -	Child Risk			
Unique Identifier	X (UTM)	Y (UTM)	1900	1900	1900	1900	1900	1900	2025	2026	1900	1900	3rd Trimester	0<2	Total	per million
396466.283768677.2	396466.28	3768677	0	0	0	0	0	0	0.000647318	0.001805197	0	0	1.39559E-08	1.47843E-07	1.61798E-07	0.1617984
396566.283768677.2	396566.28	3768677	0	0	0	0	0	0	0.000779179	0.002172923	0	0	1.67987E-08	1.77959E-07	1.94757E-07	0.1947574
396666.283768677.2	396666.28	3768677	0	0	0	0	0	0	0.000951565	0.00265366	0	0	2.05153E-08	2.1733E-07	2.37846E-07	0.2378455
396766.283768677.2	396766.28	3768677	0	0	0	0	0	0	0.001181919	0.003296057	0	0	2.54816E-08	2.69941E-07	2.95423E-07	0.295423
396866.283768677.2	396866.28	3768677	0	0	0	0	0	0	0.001503879	0.004193916	0	0	3.24229E-08	3.43475E-07	3.75897E-07	0.3758974
396966.283768677.2	396966.28	3768677	0	0	0	0	0	0	0.001935246	0.005396882	0	0	4.17229E-08	4.41995E-07	4.83718E-07	0.4837183
397066.283768677.2	397066.28	3768677	0	0	0	0	0	0	0.002507509	0.00699277	0	0	5.40606E-08	5.72696E-07	6.26757E-07	0.6267566
397166.283768677.2	397166.28	3768677	0	0	0	0	0	0	0.003169587	0.008839131	0	0	6.83347E-08	7.2391E-07	7.92244E-07	0.7922444
397366.283768677.2	397366.28	3768677	0	0	0	0	0	0	0.004131977	0.011522978	0	0	8.90833E-08	9.43712E-07	1.0328E-06	1.0327955
397466.283768677.2	397466.28	3768677	0	0	0	0	0	0	0.003884446	0.010832682	0	0	8.37467E-08	8.87178E-07	9.70925E-07	0.9709248
397566.283768677.2	397566.28	3768677	0	0	0	0	0	0	0.00331442	0.00924303	0	0	7.14572E-08	7.56988E-07	8.28446E-07	0.8284456
397666.283768677.2	397666.28	3768677	0	0	0	0	0	0	0.002676584	0.007464277	0	0	5.77058E-08	6.11312E-07	6.69017E-07	0.6690173
397766.283768677.2	397766.28	3768677	0	0	0	0	0	0	0.002091439	0.005832464	0	0	4.50904E-08	4.77669E-07	5.22759E-07	0.5227592
397866.283768677.2	397866.28	3768677	0	0	0	0	0	0	0.001654168	0.004613033	0	0	3.5663E-08	3.778E-07	4.13463E-07	0.4134626
396166.283768777.2	396166.28	3768777	0	0	0	0	0	0	0.000385027	0.001073738	0	0	8.30099E-09	8.79373E-08	9.62383E-08	0.0962383
396266.283768777.2	396266.28	3768777	0	0	0	0	0	0	0.000437271	0.001219431	0	0	9.42734E-09	9.98693E-08	1.09297E-07	0.1092967
396366.283768777.2	396366.28	3768777	0	0	0	0	0	0	0.000508122	0.001417015	0	0	1.09548E-08	1.16051E-07	1.27006E-07	0.127006
396466.283768777.2	396466.28	3768777	0	0	0	0	0	0	0.000589439	0.001643787	0	0	1.2708E-08	1.34623E-07	1.47331E-07	0.1473314
396566.283768777.2	396566.28	3768777	0	0	0	0	0	0	0.000689542	0.001922949	0	0	1.48662E-08	1.57486E-07	1.72352E-07	0.1723525
396666.283768777.2	396666.28	3768777	0	0	0	0	0	0	0.000824624	0.002299656	0	0	1.77785E-08	1.88338E-07	2.06116E-07	0.2061164
396766.283768777.2	396766.28	3768777	0	0	0	0	0	0	0.001003719	0.002799104	0	0	2.16397E-08	2.29242E-07	2.50882E-07	0.2508815
396866.283768777.2	396866.28	3768777	0	0	0	0	0	0	0.0012347	0.003443247	0	0	2.66195E-08	2.81996E-07	3.08616E-07	0.3086156
396966.283768777.2	396966.28	3768777	0	0	0	0	0	0	0.001523023	0.004247303	0	0	3.28356E-08	3.47847E-07	3.80682E-07	0.3806825
397066.283768777.2	397066.28	3768777	0	0	0	0	0	0	0.001880587	0.005244453	0	0	4.05445E-08	4.29512E-07	4.70056E-07	0.4700562
397166.283768777.2	397166.28	3768777	0	0	0	0	0	0	0.002270534	0.006331912	0	0	4.89516E-08	5.18573E-07	5.67524E-07	0.5675244
397266.283768777.2	397266.28	3768777	0	0	0	0	0	0	0.002671664	0.007450556	0	0	5.75997E-08	6.10188E-07	6.67788E-07	0.6677875
397366.283768777.2	397366.28	3768777	0	0	0	0	0	0	0.002862836	0.007983683	0	0	6.17213E-08	6.5385E-07	7.15571E-07	0.7155713
397466.283768777.2	397466.28	3768777	0	0	0	0	0	0	0.002773915	0.007735705	0	0	5.98042E-08	6.33541E-07	6.93345E-07	0.6933452
397566.283768777.2	397566.28	3768777	0	0	0	0	0	0	0.002489796	0.006943374	0	0	5.36787E-08	5.6865E-07	6.22329E-07	0.6223292
397666.283768777.2	397666.28	3768777	0	0	0	0	0	0	0.002128206	0.005934998	0	0	4.58831E-08	4.86066E-07	5.31949E-07	0.5319493
397766.283768777.2	397766.28	3768777	0	0	0	0	0	0	0.001768675	0.00493236	0	0	3.81317E-08	4.03952E-07	4.42084E-07	0.4420836
397866.283768777.2	397866.28	3768777	0	0	0	0	0	0	0.001463623	0.004081652	0	0	3.1555E-08	3.3428E-07	3.65835E-07	0.3658353
396166.283768877.2	396166.28	3768877	0	0	0	0	0	0	0.000358548	0.000999894	0	0	7.73011E-09	8.18896E-08	8.96197E-08	0.0896197
396266.283768877.2	396266.28	3768877	0	0	0	0	0	0	0.000407302	0.001135857	0	0	8.78123E-09	9.30248E-08	1.01806E-07	0.101806
396366.283768877.2	396366.28	3768877	0	0	0	0	0	0	0.000461156	0.001286041	0	0	9.94229E-09	1.05325E-07	1.15267E-07	0.1152669
396466.283768877.2	396466.28	3768877	0	0	0	0	0	0	0.000536838	0.001497096	0	0	1.15739E-08	1.2261E-07	1.34184E-07	0.1341836
396566.283768877.2	396566.28	3768877	0	0	0	0	0	0	0.000620928	0.001731603	0	0	1.33869E-08	1.41815E-07	1.55202E-07	0.1552022
396666.283768877.2	396666.28	3768877	0	0	0	0	0	0	0.00072461	0.002020743	0	0	1.56222E-08	1.65495E-07	1.81118E-07	0.1811177
396766.283768877.2	396766.28	3768877	0	0	0	0	0	0	0.000863181	0.002407179	0	0	1.86097E-08	1.97144E-07	2.15754E-07	0.2157536
396866.283768877.2	396866.28	3768877	0	0	0	0	0	0	0.001051132	0.002931325	0	0	2.26619E-08	2.40071E-07	2.62732E-07	0.2627324
396966.283768877.2	396966.28	3768877	0	0	0	0	0	0	0.001252412	0.003492643	0	0	2.70014E-08	2.86041E-07	3.13043E-07	0.3130429
397066.283768877.2	397066.28	3768877	0	0	0	0	0	0	0.001472479	0.00410635	0	0	3.17459E-08	3.36303E-07	3.68049E-07	0.368049
397166.283768877.2	397166.28	3768877	0	0	0	0	0	0	0.001721888	0.004801885	0	0	3.7123E-08	3.93266E-07	4.30389E-07	0.4303892
397266.283768877.2	397266.28	3768877	0	0	0	0	0	0	0.00196754	0.005486942	0	0	4.24192E-08	4.49371E-07	4.9179E-07	0.4917904
397366.283768877.2	397366.28	3768877	0	0	0	0	0	0	0.002091976	0.005833961	0	0	4.51019E-08	4.77791E-07	5.22893E-07	0.5228934
397466.283768877.2	397466.28	3768877	0	0	0	0	0	0	0.002083299	0.005809762	0	0	4.49149E-08	4.7581E-07	5.20724E-07	0.5207245
397566.283768877.2	397566.28	3768877	0	0	0	0	0	0	0.001943923	0.005421081	0	0	4.191E-08	4.43977E-07	4.85887E-07	0.4858873
397666.283768877.2	397666.28	3768877	0	0	0	0	0	0	0.00171339	0.004778185	0	0	3.69398E-08	3.91325E-07	4.28265E-07	0.428265
397766.283768877.2	397766.28	3768877	0	0	0	0	0	0	0.001479815	0.004126807	0	0	3.19041E-08	3.37978E-07	3.69883E-07	0.3698825
397866.283768877.2	397866.28	3768877	0	0	0	0	0	0	0.001272451	0.003548525	0	0	2.74334E-08	2.90618E-07	3.18052E-07	0.3180516
3964253767739	396425	3767739	0	0	0	0	0	0	0.000732751	0.002043446	0	0	1.57977E-08	1.67355E-07	1.83152E-07	0.1831524
3964753767739	396475	3767739	0	0	0	0	0	0	0.000808879	0.002255748	0	0	1.7439E-08	1.84742E-07	2.02181E-07	0.202181
3965253767739	396525	3767739	0	0	0	0	0	0	0.000885903	0.002470546	0	0	1.90996E-08	2.02333E-07	2.21433E-07	0.2214331
3965753767739	396575	3767739	0	0	0	0	0	0	0.000987169	0.002752951	0	0	2.12829E-08	2.25462E-07	2.46745E-07	0.2467449
3966253767739	396625	3767739	0	0	0	0	0	0	0.001072602	0.002991199	0	0	2.31247E-08	2.44974E-07	2.68099E-07	0.2680989
3966753767739	396675	3767739	0	0	0	0	0	0	0.001197754	0.003340214	0	0	2.5823E-08	2.73558E-07	2.99381E-07	0.2993808
3967253767739	396725	3767739	0	0	0	0	0	0	0.001379085	0.003845899	0	0	2.97324E-08	3.14973E-07	3.44705E-07	0.3447049
3967753767739	396775	3767739	0	0	0	0	0	0	0.001532505	0.004273748	0	0	3.304E-08	3.50013E-07	3.83053E-07	0.3830527
3968253767739	396825	3767739	0	0	0	0	0	0	0.001749352	0.004878474	0	0	3.77151E-08	3.99539E-07	4.37254E-07	0.4372538
3968753767739	396875	3767739	0	0	0	0	0	0	0.001988473	0.005545319	0	0	4.28705E-08	4.54152E-07	4.97023E-07	0.4970226
3969253767739	396925	3767739	0	0	0	0	0	0	0.002208808	0.006159775	0	0	4.76208E-08	5.04475E-07	5.52096E-07	0.5520958
3969753767739	396975	3767739	0	0	0	0	0	0	0.002415993	0.006737558	0	0	5.20876E-08	5.51794E-07	6.03882E-07	0.6038821
3970253767739	397025	3767739	0	0	0	0	0	0	0.00258489	0.007208566	0	0	5.57289E-08	5.90369E-07	6.46098E-07	0.6460981
3970753767739	397075	3767739	0	0	0	0	0	0	0.002694565	0.007514421	0	0	5.80935E-08	6.15418E-07	6.73512E-07	0.6735117
3971253767739	397125	3767739	0	0	0	0	0	0	0.002757902	0.007691049	0	0	5.9459E-08	6.29884E-07	6.89343E-07	0.6893428
3971753767739	397175	3767739	0	0	0	0	0	0	0.002794311	0.007792585	0	0	6.02439E-08	6.38199E-07	6.98443E-07	0.6984434
3972253767739	397225	3767739	0	0	0	0	0	0	0.002783934	0.007763646	0	0	6.00202E-08	6.35829E-07	6.9585E-07	0.6958496
3972753767739	397275	3767739	0	0	0	0	0	0	0.00276309	0.007705519	0	0	5.95708E-08	6.31069E-07	6.9064E-07	0.6906397
3973253767739	397325	3767739	0	0	0	0	0	0	0.002615127	0.007292888	0	0	5.63808E-08	5.97275E-07	6.53656E-07	0.6536559

Garvey Reservoir Rehab - Unmitigated I/O Tower			Demolition - 2025	Demolition - 2026	ite Preparation - 202	te Preparation - 202	Grading - 2025	Grading - 2026	nfrastructure - 202	nfrastructure - 202	Paving - 2025	itectural Coating -	Child Risk			
Unique Identifier	X (UTM)	Y (UTM)	1900	1900	1900	1900	1900	1900	2025	2026	1900	1900	3rd Trimester	0<2	Total	per million
3973753767739	397375	3767739	0	0	0	0	0	0	0.002429412	0.006774979	0	0	5.23769E-08	5.54859E-07	6.07236E-07	0.6072361
3974253767739	397425	3767739	0	0	0	0	0	0	0.002244412	0.006259066	0	0	4.83884E-08	5.12607E-07	5.60995E-07	0.5609952
3974753767739	397475	3767739	0	0	0	0	0	0	0.002101369	0.005860156	0	0	4.53045E-08	4.79937E-07	5.25241E-07	0.5252412
3975253767739	397525	3767739	0	0	0	0	0	0	0.001893826	0.005281375	0	0	4.08299E-08	4.32536E-07	4.73366E-07	0.4733655
3964253767789	396425	3767789	0	0	0	0	0	0	0.000755473	0.002106812	0	0	1.62876E-08	1.72544E-07	1.88832E-07	0.1888319
3964753767789	396475	3767789	0	0	0	0	0	0	0.00083187	0.002319863	0	0	1.79347E-08	1.89993E-07	2.07928E-07	0.2079275
3965253767789	396525	3767789	0	0	0	0	0	0	0.000915871	0.00255412	0	0	1.97457E-08	2.09178E-07	2.28924E-07	0.2289238
3965753767789	396575	3767789	0	0	0	0	0	0	0.001012933	0.0028248	0	0	2.18383E-08	2.31346E-07	2.53185E-07	0.2531846
3966253767789	396625	3767789	0	0	0	0	0	0	0.001137012	0.003170821	0	0	2.45134E-08	2.59685E-07	2.84198E-07	0.2841982
3966753767789	396675	3767789	0	0	0	0	0	0	0.001293653	0.003607651	0	0	2.78905E-08	2.9546E-07	3.23351E-07	0.3233509
3967253767789	396725	3767789	0	0	0	0	0	0	0.001505489	0.004198406	0	0	3.24576E-08	3.43842E-07	3.763E-07	0.3762999
3967753767789	396775	3767789	0	0	0	0	0	0	0.001720367	0.004797644	0	0	3.70902E-08	3.92919E-07	4.30009E-07	0.4300091
3968253767789	396825	3767789	0	0	0	0	0	0	0.001994467	0.005562034	0	0	4.29997E-08	4.55521E-07	4.98521E-07	0.4985208
3968753767789	396875	3767789	0	0	0	0	0	0	0.002297372	0.006406755	0	0	4.95302E-08	5.24702E-07	5.74232E-07	0.5742324
3969253767789	396925	3767789	0	0	0	0	0	0	0.002615574	0.007294135	0	0	5.63904E-08	5.97377E-07	6.53768E-07	0.6537677
3969753767789	396975	3767789	0	0	0	0	0	0	0.00295623	0.008244134	0	0	6.37348E-08	6.75181E-07	7.38915E-07	0.7389153
3970253767789	397025	3767789	0	0	0	0	0	0	0.003252426	0.009070144	0	0	7.01206E-08	7.42829E-07	8.1295E-07	0.81295
3970753767789	397075	3767789	0	0	0	0	0	0	0.003468019	0.009671378	0	0	7.47687E-08	7.92069E-07	8.66838E-07	0.8668381
3971253767789	397125	3767789	0	0	0	0	0	0	0.003599433	0.010037856	0	0	7.7602E-08	8.22083E-07	8.99685E-07	0.8996852
3971753767789	397175	3767789	0	0	0	0	0	0	0.003662054	0.010212488	0	0	7.8952E-08	8.36385E-07	9.15337E-07	0.9153374
3972253767789	397225	3767789	0	0	0	0	0	0	0.003639958	0.010150868	0	0	7.84756E-08	8.31339E-07	9.09814E-07	0.9098144
3972753767789	397275	3767789	0	0	0	0	0	0	0.003606679	0.010058063	0	0	7.77582E-08	8.23738E-07	9.01496E-07	0.9014964
3973253767789	397325	3767789	0	0	0	0	0	0	0.003407456	0.009502484	0	0	7.3463E-08	7.78237E-07	8.517E-07	0.8517002
3973753767789	397375	3767789	0	0	0	0	0	0	0.003099721	0.008644291	0	0	6.68284E-08	7.07953E-07	7.74781E-07	0.7747811
3974253767789	397425	3767789	0	0	0	0	0	0	0.002790017	0.007780611	0	0	6.01514E-08	6.37219E-07	6.9737E-07	0.6973701
3974753767789	397475	3767789	0	0	0	0	0	0	0.002559573	0.007137964	0	0	5.51831E-08	5.84587E-07	6.3977E-07	0.6397702
3975253767789	397525	3767789	0	0	0	0	0	0	0.002254074	0.006286009	0	0	4.85967E-08	5.14813E-07	5.6341E-07	0.5634101
3964253767839	396425	3767839	0	0	0	0	0	0	0.00077578	0.002163443	0	0	1.67254E-08	1.77182E-07	1.93908E-07	0.1939077
3964753767839	396475	3767839	0	0	0	0	0	0	0.000860944	0.002400943	0	0	1.85615E-08	1.96633E-07	2.15195E-07	0.2151946
3965253767839	396525	3767839	0	0	0	0	0	0	0.000942172	0.002627465	0	0	2.03127E-08	2.15185E-07	2.35498E-07	0.2354977
3965753767839	396575	3767839	0	0	0	0	0	0	0.001057841	0.002950036	0	0	2.28065E-08	2.41603E-07	2.64409E-07	0.2644094
3966253767839	396625	3767839	0	0	0	0	0	0	0.001199453	0.003344954	0	0	2.58596E-08	2.73946E-07	2.99806E-07	0.2998056
3966753767839	396675	3767839	0	0	0	0	0	0	0.001412006	0.003937706	0	0	3.04421E-08	3.22491E-07	3.52933E-07	0.3529335
3967253767839	396725	3767839	0	0	0	0	0	0	0.001640481	0.004574863	0	0	3.53679E-08	3.74673E-07	4.10041E-07	0.4100414
3967753767839	396775	3767839	0	0	0	0	0	0	0.001912255	0.005332767	0	0	4.12272E-08	4.36745E-07	4.77972E-07	0.4779717
3968253767839	396825	3767839	0	0	0	0	0	0	0.002246381	0.006264554	0	0	4.84308E-08	5.13056E-07	5.61487E-07	0.5614871
3968753767839	396875	3767839	0	0	0	0	0	0	0.002646258	0.007379705	0	0	5.7052E-08	6.04385E-07	6.61437E-07	0.6614372
3969253767839	396925	3767839	0	0	0	0	0	0	0.003102494	0.008652025	0	0	6.68882E-08	7.08586E-07	7.75474E-07	0.7754743
3969753767839	396975	3767839	0	0	0	0	0	0	0.00363128	0.010126669	0	0	7.82886E-08	8.29357E-07	9.07645E-07	0.9076455
3970253767839	397025	3767839	0	0	0	0	0	0	0.004157741	0.011594826	0	0	8.96388E-08	9.49596E-07	1.03924E-06	1.0392353
3970753767839	397075	3767839	0	0	0	0	0	0	0.004542858	0.012668814	0	0	9.79417E-08	1.03755E-06	1.1355E-06	1.1354959
3971253767839	397125	3767839	0	0	0	0	0	0	0.004802196	0.013392041	0	0	1.03533E-07	1.09679E-06	1.20032E-06	1.2003182
3971753767839	397175	3767839	0	0	0	0	0	0	0.005032819	0.014035186	0	0	1.08505E-07	1.14946E-06	1.25796E-06	1.2579628
3972253767839	397225	3767839	0	0	0	0	0	0	0.005127197	0.014298381	0	0	1.1054E-07	1.17101E-06	1.28155E-06	1.2815528
3972753767839	397275	3767839	0	0	0	0	0	0	0.004979949	0.013887746	0	0	1.07365E-07	1.13738E-06	1.24475E-06	1.2447479
3973253767839	397325	3767839	0	0	0	0	0	0	0.004632137	0.01291779	0	0	9.98665E-08	1.05794E-06	1.15781E-06	1.1578114
3973753767839	397375	3767839	0	0	0	0	0	0	0.004101651	0.011438406	0	0	8.84295E-08	9.36786E-07	1.02522E-06	1.0252154
3974753767839	397475	3767839	0	0	0	0	0	0	0.003092475	0.008624084	0	0	6.66722E-08	7.06298E-07	7.7297E-07	0.7729699
3975253767839	397525	3767839	0	0	0	0	0	0	0.002708521	0.007553339	0	0	5.83943E-08	6.18606E-07	6.77E-07	0.6769999
3964253767889	396425	3767889	0	0	0	0	0	0	0.00079224	0.002209346	0	0	1.70803E-08	1.80942E-07	1.98022E-07	0.198022
3964753767889	396475	3767889	0	0	0	0	0	0	0.000866848	0.002417408	0	0	1.86888E-08	1.97982E-07	2.1667E-07	0.2166704
3965253767889	396525	3767889	0	0	0	0	0	0	0.000971246	0.002708545	0	0	2.09396E-08	2.21825E-07	2.42765E-07	0.2427647
3965753767889	396575	3767889	0	0	0	0	0	0	0.00110758	0.003088744	0	0	2.38789E-08	2.52963E-07	2.76842E-07	0.2768417
3974753767889	397475	3767889	0	0	0	0	0	0	0.003930249	0.010960413	0	0	8.47342E-08	8.97639E-07	9.82373E-07	0.9823733
3975253767889	397525	3767889	0	0	0	0	0	0	0.003273985	0.009130268	0	0	7.05855E-08	7.47753E-07	8.18339E-07	0.8183388
3964253767939	396425	3767939	0	0	0	0	0	0	0.000805212	0.00224552	0	0	1.736E-08	1.83904E-07	2.01264E-07	0.2012642
3964753767939	396475	3767939	0	0	0	0	0	0	0.000884382	0.002466305	0	0	1.90668E-08	2.01986E-07	2.21053E-07	0.221053
3965253767939	396525	3767939	0	0	0	0	0	0	0.000998888	0.002785632	0	0	2.15355E-08	2.28139E-07	2.49674E-07	0.2496741
3974753767939	397475	3767939	0	0	0	0	0	0	0.004990148	0.013916187	0	0	1.07585E-07	1.13971E-06	1.2473E-06	1.247297
3975253767939	397525	3767939	0	0	0	0	0	0	0.003956371	0.011033259	0	0	8.52973E-08	9.03605E-07	9.88902E-07	0.9889024
3964253767989	396425	3767989	0	0	0	0	0	0	0.000805212	0.00224552	0	0	1.736E-08	1.83904E-07	2.01264E-07	0.2012642
3964753767989	396475	3767989	0	0	0	0	0	0	0.000899322	0.002507967	0	0	1.93889E-08	2.05398E-07	2.24787E-07	0.2247871
3974753767989	397475	3767989	0	0	0	0	0	0	0.006224758	0.017359184	0	0	1.34203E-07	1.42169E-06	1.55589E-06	1.5558902
3975253767989	397525	3767989	0	0	0	0	0	0	0.004696457	0.013097162	0	0	1.01253E-07	1.07264E-06	1.17389E-06	1.1738884
3964253768039	396425	3768039	0	0	0	0	0	0	0.000811026	0.002261736	0	0	1.74853E-08	1.85232E-07	2.02718E-07	0.2027176
3964753768039	396475	3768039	0	0	0	0	0	0	0.000911667	0.002542395	0	0	1.96551E-08	2.08218E-07	2.27873E-07	0.2278729
3974753768039	397475	3768039	0	0	0	0	0	0	0.007803692	0.021762409	0	0	1.68244E-07	1.7823E-06	1.95055E-06	1.9505478
3975253768039	397525	3768039	0	0	0	0	0	0	0.005573146	0.015542012	0	0	1.20154E-07	1.27286E-06	1.39302E-06	1.3930184
3964253768089	396425	3768089	0	0	0	0	0	0	0.00081532	0.002273711	0	0	1.75779E-08	1.86213E-07	2.03791E-07	0.2037909

Garvey Reservoir Rehab - Unmitigated I/O Tower			Demolition - 2025	Demolition - 2026	ite Preparation - 202	te Preparation - 202	Grading - 2025	Grading - 2026	nfrastructure - 202	nfrastructure - 202	Paving - 2025	itectural Coating -	Child Risk			
Unique Identifier	X (UTM)	Y (UTM)	1900	1900	1900	1900	1900	1900	2025	2026	1900	1900	3rd Trimester	0<2	Total	per million
3964753768089	396475	3768089	0	0	0	0	0	0	0.000919629	0.002564598	0	0	1.98267E-08	2.10036E-07	2.29863E-07	0.2298629
3974753768089	397475	3768089	0	0	0	0	0	0	0.009455356	0.026368457	0	0	2.03853E-07	2.15953E-06	2.36338E-06	2.3633843
3975253768089	397525	3768089	0	0	0	0	0	0	0.006378357	0.017787532	0	0	1.37514E-07	1.45677E-06	1.59428E-06	1.5942826
3964253768139	396425	3768139	0	0	0	0	0	0	0.000825429	0.002301901	0	0	1.77958E-08	1.88522E-07	2.06318E-07	0.2063176
3964753768139	396475	3768139	0	0	0	0	0	0	0.00091766	0.002559109	0	0	1.97843E-08	2.09587E-07	2.29371E-07	0.229371
3974253768139	397425	3768139	0	0	0	0	0	0	0.018197463	0.050747853	0	0	3.92328E-07	4.15616E-06	4.54849E-06	4.5484906
3974753768139	397475	3768139	0	0	0	0	0	0	0.010900013	0.03039722	0	0	2.34999E-07	2.48948E-06	2.72448E-06	2.7244792
3975253768139	397525	3768139	0	0	0	0	0	0	0.007201997	0.020084444	0	0	1.55271E-07	1.64488E-06	1.80015E-06	1.800153
3964253768189	396425	3768189	0	0	0	0	0	0	0.000818004	0.002281195	0	0	1.76358E-08	1.86826E-07	2.04462E-07	0.2044617
3964753768189	396475	3768189	0	0	0	0	0	0	0.000910593	0.002539401	0	0	1.96319E-08	2.07973E-07	2.27605E-07	0.2276045
3973753768189	397375	3768189	0	0	0	0	0	0	0.039545458	0.1102817	0	0	8.5258E-07	9.03188E-06	9.88446E-06	9.8844629
3974253768189	397425	3768189	0	0	0	0	0	0	0.019697316	0.054930543	0	0	4.24664E-07	4.49872E-06	4.92338E-06	4.9233818
3974753768189	397475	3768189	0	0	0	0	0	0	0.01224913	0.034159545	0	0	2.64085E-07	2.79761E-06	3.06169E-06	3.0616935
3975253768189	397525	3768189	0	0	0	0	0	0	0.008056322	0.022466925	0	0	1.7369E-07	1.84E-06	2.01369E-06	2.013693
3964253768239	396425	3768239	0	0	0	0	0	0	0.000806554	0.002249262	0	0	1.73889E-08	1.84211E-07	2.016E-07	0.2015996
3964753768239	396475	3768239	0	0	0	0	0	0	0.000898427	0.002505472	0	0	1.93696E-08	2.05194E-07	2.24564E-07	0.2245635
3973753768239	397375	3768239	0	0	0	0	0	0	0.036870126	0.102820915	0	0	7.94901E-07	8.42086E-06	9.21576E-06	9.2157586
3974253768239	397425	3768239	0	0	0	0	0	0	0.01920798	0.053565917	0	0	4.14114E-07	4.38696E-06	4.80107E-06	4.8010715
3974753768239	397475	3768239	0	0	0	0	0	0	0.01202298	0.033528874	0	0	2.59209E-07	2.74596E-06	3.00517E-06	3.0051669
3975253768239	397525	3768239	0	0	0	0	0	0	0.008181116	0.022814942	0	0	1.76381E-07	1.8685E-06	2.04489E-06	2.0448855
3964253768289	396425	3768289	0	0	0	0	0	0	0.000789557	0.002201862	0	0	1.70224E-08	1.80329E-07	1.97351E-07	0.1973512
3964753768289	396475	3768289	0	0	0	0	0	0	0.000881609	0.002458571	0	0	1.9007E-08	2.01353E-07	2.2036E-07	0.2203598
3973253768289	397325	3768289	0	0	0	0	0	0	0.042027203	0.117202621	0	0	9.06085E-07	9.59869E-06	1.05048E-05	10.50478
3973753768289	397375	3768289	0	0	0	0	0	0	0.029072517	0.08107547	0	0	6.26789E-07	6.63994E-06	7.26673E-06	7.2667313
3974253768289	397425	3768289	0	0	0	0	0	0	0.019456674	0.054259456	0	0	4.19476E-07	4.44376E-06	4.86323E-06	4.8632328
3974753768289	397475	3768289	0	0	0	0	0	0	0.012976603	0.036188272	0	0	2.79769E-07	2.96376E-06	3.24353E-06	3.2435267
3975253768289	397525	3768289	0	0	0	0	0	0	0.00887361	0.024746124	0	0	1.91311E-07	2.02667E-06	2.21798E-06	2.2179758
3964253768339	396425	3768339	0	0	0	0	0	0	0.00077417	0.002158952	0	0	1.66907E-08	1.76815E-07	1.93505E-07	0.1935052
3964753768339	396475	3768339	0	0	0	0	0	0	0.000861212	0.002401691	0	0	1.85673E-08	1.96694E-07	2.15262E-07	0.2152617
3965253768339	396525	3768339	0	0	0	0	0	0	0.00097393	0.002716029	0	0	2.09974E-08	2.22438E-07	2.43436E-07	0.2434356
3972753768339	397275	3768339	0	0	0	0	0	0	0.030249874	0.084358804	0	0	6.52172E-07	6.90884E-06	7.56101E-06	7.561014
3973253768339	397325	3768339	0	0	0	0	0	0	0.027608358	0.076992321	0	0	5.95222E-07	6.30554E-06	6.90076E-06	6.9007618
3973753768339	397375	3768339	0	0	0	0	0	0	0.021798148	0.060789202	0	0	4.69957E-07	4.97853E-06	5.44849E-06	5.4484889
3974253768339	397425	3768339	0	0	0	0	0	0	0.016353822	0.045606433	0	0	3.5258E-07	3.73509E-06	4.08767E-06	4.0876691
3974753768339	397475	3768339	0	0	0	0	0	0	0.011964474	0.033365718	0	0	2.57948E-07	2.7326E-06	2.99054E-06	2.9905433
3975253768339	397525	3768339	0	0	0	0	0	0	0.008795424	0.024528083	0	0	1.89625E-07	2.00881E-06	2.19843E-06	2.198433
3964253768389	396425	3768389	0	0	0	0	0	0	0.000752789	0.002099328	0	0	1.62298E-08	1.71931E-07	1.88161E-07	0.1881611
3964753768389	396475	3768389	0	0	0	0	0	0	0.000836433	0.002332587	0	0	1.80331E-08	1.91035E-07	2.09068E-07	0.2090679
3965253768389	396525	3768389	0	0	0	0	0	0	0.000941367	0.00262522	0	0	2.02954E-08	2.15001E-07	2.35296E-07	0.2352964
3972253768389	397225	3768389	0	0	0	0	0	0	0.017923184	0.049982964	0	0	3.86415E-07	4.09352E-06	4.47993E-06	4.4799342
3972753768389	397275	3768389	0	0	0	0	0	0	0.019609021	0.054684311	0	0	4.22761E-07	4.47855E-06	4.90131E-06	4.9013123
3973253768389	397325	3768389	0	0	0	0	0	0	0.01892422	0.052774584	0	0	4.07997E-07	4.32215E-06	4.73014E-06	4.7301449
3973753768389	397375	3768389	0	0	0	0	0	0	0.016272684	0.04538016	0	0	3.50831E-07	3.71656E-06	4.06739E-06	4.0673884
3974253768389	397425	3768389	0	0	0	0	0	0	0.013124656	0.036601152	0	0	2.82961E-07	2.99757E-06	3.28053E-06	3.2805328
3974753768389	397475	3768389	0	0	0	0	0	0	0.010282753	0.028675846	0	0	2.21691E-07	2.3485E-06	2.57019E-06	2.5701938
3975253768389	397525	3768389	0	0	0	0	0	0	0.007952014	0.022176038	0	0	1.71441E-07	1.81618E-06	1.98762E-06	1.987621
3964253768439	396425	3768439	0	0	0	0	0	0	0.000733914	0.002046689	0	0	1.58228E-08	1.6762E-07	1.83443E-07	0.1834431
3964753768439	396475	3768439	0	0	0	0	0	0	0.000809237	0.002256746	0	0	1.74467E-08	1.84824E-07	2.0227E-07	0.2022704
3965253768439	396525	3768439	0	0	0	0	0	0	0.000905315	0.002524682	0	0	1.95181E-08	2.06767E-07	2.26285E-07	0.2262853
3971753768439	397175	3768439	0	0	0	0	0	0	0.00985747	0.027489845	0	0	2.12522E-07	2.25137E-06	2.46389E-06	2.4638934
3972253768439	397225	3768439	0	0	0	0	0	0	0.012388058	0.034546979	0	0	2.6708E-07	2.82934E-06	3.09642E-06	3.0964189
3972753768439	397275	3768439	0	0	0	0	0	0	0.01351675	0.037694599	0	0	2.91414E-07	3.08712E-06	3.37854E-06	3.3785376
3973253768439	397325	3768439	0	0	0	0	0	0	0.013626784	0.038001453	0	0	2.93787E-07	3.11225E-06	3.40604E-06	3.4060406
3973753768439	397375	3768439	0	0	0	0	0	0	0.012551766	0.035003518	0	0	2.7061E-07	2.86673E-06	3.13734E-06	3.137338
3974253768439	397425	3768439	0	0	0	0	0	0	0.010831757	0.030206871	0	0	2.33527E-07	2.47389E-06	2.70742E-06	2.7074184
3974753768439	397475	3768439	0	0	0	0	0	0	0.008754005	0.024412577	0	0	1.88732E-07	1.99935E-06	2.18808E-06	2.1880802
3975253768439	397525	3768439	0	0	0	0	0	0	0.007060564	0.019690024	0	0	1.52222E-07	1.61258E-06	1.7648E-06	1.7648016
3964253768489	396425	3768489	0	0	0	0	0	0	0.000707702	0.001973593	0	0	1.52577E-08	1.61634E-07	1.76892E-07	0.1768916
3964753768489	396475	3768489	0	0	0	0	0	0	0.000778464	0.002170927	0	0	1.67833E-08	1.77795E-07	1.94579E-07	0.1945785
3965253768489	396525	3768489	0	0	0	0	0	0	0.000867832	0.002420152	0	0	1.871E-08	1.98206E-07	2.16916E-07	0.2169164
3970753768489	397075	3768489	0	0	0	0	0	0	0.004916434	0.01371062	0	0	1.05996E-07	1.12288E-06	1.22887E-06	1.2288722
3971253768489	397125	3768489	0	0	0	0	0	0	0.006006659	0.016750965	0	0	1.29501E-07	1.37188E-06	1.50138E-06	1.501376
3971753768489	397175	3768489	0	0	0	0	0	0	0.007336721	0.020460152	0	0	1.58176E-07	1.67565E-06	1.83383E-06	1.8338275
3972253768489	397225	3768489	0	0	0	0	0	0	0.00876805	0.024451744	0	0	1.89035E-07	2.00256E-06	2.19159E-06	2.1915908
3972753768489	397275	3768489	0	0	0	0	0	0	0.009836179	0.02743047	0	0	2.12063E-07	2.24651E-06	2.45857E-06	2.4585716
3973253768489	397325	3768489	0	0	0	0	0	0	0.010104463	0.028178644	0	0	2.17847E-07	2.30778E-06	2.52563E-06	2.5256299
3973753768489	397375	3768489	0	0	0	0	0	0	0.009596252	0.026761379	0	0	2.0689E-07	2.19171E-06	2.3986E-06	2.3986016
3974253768489	397425	3768489	0	0	0	0	0	0	0.008639141	0.024092251	0	0	1.86255E-07	1.97311E-06	2.15937E-06	2.1593697
3974753768489	397475	3768489	0	0	0	0	0	0	0.007491573	0.020891993	0	0	1.61515E-07	1.71102E-06	1.87253E-06	1.872533

Garvey Reservoir Rehab - Unmitigated I/O Tower			Demolition - 2025	Demolition - 2026	ite Preparation - 202	te Preparation - 202	Grading - 2025	Grading - 2026	nfrastructure - 202	nfrastructure - 202	Paving - 2025	itectural Coating -	Child Risk			
Unique Identifier	X (UTM)	Y (UTM)	1900	1900	1900	1900	1900	1900	2025	2026	1900	1900	3rd Trimester	0<2	Total	per million
3975253768489	397525	3768489	0	0	0	0	0	0	0.006324414	0.017637099	0	0	1.36351E-07	1.44445E-06	1.5808E-06	1.5807994
3964253768539	396425	3768539	0	0	0	0	0	0	0.000680686	0.001898251	0	0	1.46752E-08	1.55464E-07	1.70139E-07	0.1701388
3964753768539	396475	3768539	0	0	0	0	0	0	0.000747601	0.002084858	0	0	1.61179E-08	1.70746E-07	1.86864E-07	0.1868642
3965253768539	396525	3768539	0	0	0	0	0	0	0.000828202	0.002309635	0	0	1.78556E-08	1.89155E-07	2.07011E-07	0.2070108
3965753768539	396575	3768539	0	0	0	0	0	0	0.000929737	0.002592788	0	0	2.00447E-08	2.12345E-07	2.3239E-07	0.2323896
3970253768539	397025	3768539	0	0	0	0	0	0	0.003399763	0.009481029	0	0	7.32972E-08	7.7648E-07	8.49777E-07	0.8497772
3970753768539	397075	3768539	0	0	0	0	0	0	0.00406542	0.011337369	0	0	8.76484E-08	9.28511E-07	1.01616E-06	1.0161595
3971253768539	397125	3768539	0	0	0	0	0	0	0.004832254	0.013475864	0	0	1.04181E-07	1.10365E-06	1.20783E-06	1.2078312
3971753768539	397175	3768539	0	0	0	0	0	0	0.005736049	0.015996305	0	0	1.23666E-07	1.31007E-06	1.43374E-06	1.4337364
3972253768539	397225	3768539	0	0	0	0	0	0	0.006601018	0.018408474	0	0	1.42315E-07	1.50762E-06	1.64994E-06	1.6499372
3972753768539	397275	3768539	0	0	0	0	0	0	0.007448902	0.020772993	0	0	1.60595E-07	1.70127E-06	1.86187E-06	1.8618672
3973253768539	397325	3768539	0	0	0	0	0	0	0.007701442	0.02147726	0	0	1.66039E-07	1.75895E-06	1.92499E-06	1.9249901
3973753768539	397375	3768539	0	0	0	0	0	0	0.007482717	0.020867295	0	0	1.61324E-07	1.709E-06	1.87032E-06	1.8703194
3974253768539	397425	3768539	0	0	0	0	0	0	0.006952499	0.019388659	0	0	1.49892E-07	1.5879E-06	1.73779E-06	1.7377904
3974753768539	397475	3768539	0	0	0	0	0	0	0.006228784	0.01737041	0	0	1.34289E-07	1.42261E-06	1.5569E-06	1.5568964
3975253768539	397525	3768539	0	0	0	0	0	0	0.005436454	0.015160815	0	0	1.17207E-07	1.24164E-06	1.35885E-06	1.358852
3964253768589	396425	3768589	0	0	0	0	0	0	0.000654654	0.001825654	0	0	1.4114E-08	1.49518E-07	1.63632E-07	0.163632
3964753768589	396475	3768589	0	0	0	0	0	0	0.000715485	0.001995297	0	0	1.54255E-08	1.63411E-07	1.78837E-07	0.1788369
3965253768589	396525	3768589	0	0	0	0	0	0	0.000791614	0.0022076	0	0	1.70668E-08	1.80799E-07	1.97865E-07	0.1978655
3965753768589	396575	3768589	0	0	0	0	0	0	0.000879283	0.002452085	0	0	1.89569E-08	2.00822E-07	2.19778E-07	0.2197785
3966253768589	396625	3768589	0	0	0	0	0	0	0.000981623	0.002737484	0	0	2.11633E-08	2.24195E-07	2.45359E-07	0.2453585
3968253768589	396825	3768589	0	0	0	0	0	0	0.001618385	0.004513243	0	0	3.48916E-08	3.69627E-07	4.04518E-07	0.4045185
3968753768589	396875	3768589	0	0	0	0	0	0	0.001869583	0.005213768	0	0	4.03073E-08	4.26999E-07	4.67306E-07	0.4673059
3969253768589	396925	3768589	0	0	0	0	0	0	0.00214905	0.005993126	0	0	4.63324E-08	4.90827E-07	5.37159E-07	0.5371592
3969753768589	396975	3768589	0	0	0	0	0	0	0.002523432	0.007037177	0	0	5.44039E-08	5.76333E-07	6.30737E-07	0.6307367
3970253768589	397025	3768589	0	0	0	0	0	0	0.00295131	0.008230413	0	0	6.36287E-08	6.74057E-07	7.37686E-07	0.7376855
3970753768589	397075	3768589	0	0	0	0	0	0	0.003414971	0.00952344	0	0	7.3625E-08	7.79953E-07	8.53578E-07	0.8535785
3971253768589	397125	3768589	0	0	0	0	0	0	0.004007809	0.011176707	0	0	8.64063E-08	9.15353E-07	1.00176E-06	1.0017596
3971753768589	397175	3768589	0	0	0	0	0	0	0.004625517	0.012899328	0	0	9.97238E-08	1.05643E-06	1.15616E-06	1.1561568
3972253768589	397225	3768589	0	0	0	0	0	0	0.005185166	0.014460041	0	0	1.1179E-07	1.18425E-06	1.29604E-06	1.2960422
3972753768589	397275	3768589	0	0	0	0	0	0	0.005629146	0.015698183	0	0	1.21362E-07	1.28565E-06	1.40702E-06	1.4070159
3973253768589	397325	3768589	0	0	0	0	0	0	0.006014353	0.01677242	0	0	1.29666E-07	1.37363E-06	1.5033E-06	1.503299
3973753768589	397375	3768589	0	0	0	0	0	0	0.005940908	0.016567602	0	0	1.28083E-07	1.35686E-06	1.48494E-06	1.4849412
3974253768589	397425	3768589	0	0	0	0	0	0	0.00566323	0.015793233	0	0	1.22096E-07	1.29344E-06	1.41554E-06	1.4155352
3974753768589	397475	3768589	0	0	0	0	0	0	0.005202789	0.014509187	0	0	1.1217E-07	1.18828E-06	1.30045E-06	1.3004472
3975253768589	397525	3768589	0	0	0	0	0	0	0.004659242	0.01299338	0	0	1.00451E-07	1.06414E-06	1.16459E-06	1.1645866
3964253768639	396425	3768639	0	0	0	0	0	0	0.000627816	0.001750812	0	0	1.35354E-08	1.43389E-07	1.56924E-07	0.1569239
3964753768639	396475	3768639	0	0	0	0	0	0	0.000682117	0.001902243	0	0	1.47061E-08	1.5579E-07	1.70497E-07	0.1704966
3965253768639	396525	3768639	0	0	0	0	0	0	0.000752521	0.002098579	0	0	1.6224E-08	1.7187E-07	1.88094E-07	0.188094
3965753768639	396575	3768639	0	0	0	0	0	0	0.00083017	0.002315123	0	0	1.78981E-08	1.89605E-07	2.07503E-07	0.2075027
3966253768639	396625	3768639	0	0	0	0	0	0	0.000920523	0.002567093	0	0	1.9846E-08	2.10241E-07	2.30087E-07	0.2300865
3966753768639	396675	3768639	0	0	0	0	0	0	0.001026799	0.002863468	0	0	2.21373E-08	2.34513E-07	2.5665E-07	0.2566504
3967253768639	396725	3768639	0	0	0	0	0	0	0.001152219	0.003213232	0	0	2.48413E-08	2.63158E-07	2.87999E-07	0.2879994
3967753768639	396775	3768639	0	0	0	0	0	0	0.001298483	0.003621122	0	0	2.79946E-08	2.96564E-07	3.24558E-07	0.3245584
3968253768639	396825	3768639	0	0	0	0	0	0	0.001474626	0.004112338	0	0	3.17922E-08	3.36793E-07	3.68586E-07	0.3685856
3968753768639	396875	3768639	0	0	0	0	0	0	0.001677875	0.004679144	0	0	3.61741E-08	3.83214E-07	4.19388E-07	0.419388
3969253768639	396925	3768639	0	0	0	0	0	0	0.001914939	0.005340251	0	0	4.12851E-08	4.37357E-07	4.78643E-07	0.4786426
3969753768639	396975	3768639	0	0	0	0	0	0	0.002206035	0.006152041	0	0	4.7561E-08	5.03842E-07	5.51403E-07	0.5514027
3970253768639	397025	3768639	0	0	0	0	0	0	0.002533183	0.007064369	0	0	5.46141E-08	5.7856E-07	6.33174E-07	0.6331739
3970753768639	397075	3768639	0	0	0	0	0	0	0.002880638	0.008033328	0	0	6.21051E-08	6.57916E-07	7.20021E-07	0.720021
3971253768639	397125	3768639	0	0	0	0	0	0	0.003230598	0.009009273	0	0	6.965E-08	7.37844E-07	8.07494E-07	0.8074941
3971753768639	397175	3768639	0	0	0	0	0	0	0.003744803	0.010443252	0	0	8.0736E-08	8.55285E-07	9.36021E-07	0.9360206
3972253768639	397225	3768639	0	0	0	0	0	0	0.004174112	0.01164048	0	0	8.99917E-08	9.53335E-07	1.04333E-06	1.0433272
3972753768639	397275	3768639	0	0	0	0	0	0	0.004540174	0.01266133	0	0	9.78838E-08	1.03694E-06	1.13483E-06	1.1348251
3973253768639	397325	3768639	0	0	0	0	0	0	0.00479164	0.013362603	0	0	1.03305E-07	1.09437E-06	1.19768E-06	1.1976797
3973753768639	397375	3768639	0	0	0	0	0	0	0.00479173	0.013362852	0	0	1.03307E-07	1.09439E-06	1.1977E-06	1.197702
3974253768639	397425	3768639	0	0	0	0	0	0	0.004651907	0.012972923	0	0	1.00293E-07	1.06246E-06	1.16275E-06	1.162753
3974753768639	397475	3768639	0	0	0	0	0	0	0.004377986	0.012209033	0	0	9.43872E-08	9.99899E-07	1.09429E-06	1.0942861
3975253768639	397525	3768639	0	0	0	0	0	0	0.00400441	0.011167227	0	0	8.6333E-08	9.14577E-07	1.00091E-06	1.0009099
3964253768689	396425	3768689	0	0	0	0	0	0	0.000599011	0.001670481	0	0	1.29144E-08	1.3681E-07	1.49724E-07	0.1497239
3964753768689	396475	3768689	0	0	0	0	0	0	0.000649286	0.001810686	0	0	1.39983E-08	1.48292E-07	1.6229E-07	0.1622904
3965253768689	396525	3768689	0	0	0	0	0	0	0.000709044	0.001977335	0	0	1.52866E-08	1.6194E-07	1.77227E-07	0.177227
3965753768689	396575	3768689	0	0	0	0	0	0	0.000780432	0.002176416	0	0	1.68257E-08	1.78245E-07	1.9507E-07	0.1950704
3966253768689	396625	3768689	0	0	0	0	0	0	0.000859065	0.002395704	0	0	1.8521E-08	1.96204E-07	2.14725E-07	0.2147251
3966753768689	396675	3768689	0	0	0	0	0	0	0.000952728	0.002656903	0	0	2.05403E-08	2.17596E-07	2.38136E-07	0.2381362
3967253768689	396725	3768689	0	0	0	0	0	0	0.00105811	0.002950784	0	0	2.28123E-08	2.41664E-07	2.64477E-07	0.2644765
3967753768689	396775	3768689	0	0	0	0	0	0	0.001182904	0.003298801	0	0	2.55028E-08	2.70166E-07	2.95669E-07	0.295669
3968253768689	396825	3768689	0	0	0	0	0	0	0.00132881	0.003705694	0	0	2.86485E-08	3.0349E-07	3.32138E-07	0.3321385
3968753768689	396875	3768689	0	0	0	0	0	0	0.001501911	0.004188427	0	0	3.23804E-08	3.43025E-07	3.75405E-07	0.3754055

Garvey Reservoir Rehab - Unmitigated I/O Tower			Demolition - 2025	Demolition - 2026	ite Preparation - 202	te Preparation - 202	Grading - 2025	Grading - 2026	nfrastructure - 202	nfrastructure - 202	Paving - 2025	itectural Coating -	Child Risk			
Unique Identifier	X (UTM)	Y (UTM)	1900	1900	1900	1900	1900	1900	2025	2026	1900	1900	3rd Trimester	0<2	Total	per million
3969253768689	396925	3768689	0	0	0	0	0	0	0.001696661	0.004731533	0	0	3.65791E-08	3.87505E-07	4.24084E-07	0.4240837
3969753768689	396975	3768689	0	0	0	0	0	0	0.001920932	0.005356966	0	0	4.14143E-08	4.38726E-07	4.80141E-07	0.4801407
3970253768689	397025	3768689	0	0	0	0	0	0	0.002179287	0.006077448	0	0	4.69843E-08	4.97733E-07	5.44717E-07	0.544717
3970753768689	397075	3768689	0	0	0	0	0	0	0.002475304	0.006902959	0	0	5.33663E-08	5.65341E-07	6.18707E-07	0.6187069
3971253768689	397125	3768689	0	0	0	0	0	0	0.002727039	0.007604981	0	0	5.87936E-08	6.22835E-07	6.81628E-07	0.6816285
3971753768689	397175	3768689	0	0	0	0	0	0	0.003098468	0.008640799	0	0	6.68014E-08	7.07667E-07	7.74468E-07	0.7744681
3972253768689	397225	3768689	0	0	0	0	0	0	0.003446102	0.009610257	0	0	7.42962E-08	7.87064E-07	8.6136E-07	0.8613598
3972753768689	397275	3768689	0	0	0	0	0	0	0.003713224	0.010355188	0	0	8.00552E-08	8.48072E-07	9.28127E-07	0.9281274
3973253768689	397325	3768689	0	0	0	0	0	0	0.003899028	0.010873346	0	0	8.40611E-08	8.90508E-07	9.7457E-07	0.9745695
3973753768689	397375	3768689	0	0	0	0	0	0	0.003959323	0.011041492	0	0	8.5361E-08	9.04279E-07	9.8964E-07	0.9896403
3974253768689	397425	3768689	0	0	0	0	0	0	0.003881405	0.0108242	0	0	8.36811E-08	8.86483E-07	9.70165E-07	0.9701646
3974753768689	397475	3768689	0	0	0	0	0	0	0.003703205	0.010327246	0	0	7.98392E-08	8.45784E-07	9.25623E-07	0.9256231
3975253768689	397525	3768689	0	0	0	0	0	0	0.003453259	0.009630215	0	0	7.44505E-08	7.88698E-07	8.63149E-07	0.8631486

Garvey Reservoir Rehab - Unmitigated I/O Tower

Offroad DPM Emissions, Ground Level Concentrations and Health Risk Calculations

Residential Receptors

Phase	Year	Emissions (lbs/day)	Meters	lbs/meter	meters (h1)	lbs/day (H1)	g/s (H1)	meters (h2)	lbs/day (H2)	g/s (H2)	hrs/day
Demolition - 2025	1900		1932.1	0	691.2	0	0	1240.9	0	0	10.00
Demolition - 2026	1900		1932.1	0	691.2	0	0	1240.9	0	0	10.00
Site Preparation - 2025	1900		1932.1	0	691.2	0	0	1240.9	0	0	10.00
Site Preparation - 2026	1900		1932.1	0	691.2	0	0	1240.9	0	0	10.00
Grading - 2025	1900		1932.1	0	691.2	0	0	1240.9	0	0	10.00
Grading - 2026	1900		1932.1	0	691.2	0	0	1240.9	0	0	10.00
Infrastructure - 2025	2025	0.0100	1932.1	5.17572E-06	691.2	0.003577455	4.50749E-05	1240.9	0.006422545	8.09223E-05	10.00
Infrastructure - 2026	2026	0.0100	1932.1	5.17572E-06	691.2	0.003577455	4.50749E-05	1240.9	0.006422545	8.09223E-05	10.00
Paving - 2025	1900		1932.1	0	691.2	0	0	1240.9	0	0	10.00
Architectural Coating - 2026	1900		1932.1	0	691.2	0	0	1240.9	0	0	10.00

		AERMOD Column Identifier:	*5*	*5*	*5*	*5*	*5*	*5*	*5*	*5*	*5*	*5*				
			6	*6*	*6*	*6*	*6*	*6*	*6*	*6*	*6*	*6*			*MAX:*	0.097724
Garvey Reservoir Rehab - Unmitigated I/O Tower			Demolition - 2025	Demolition - 2026	Site Preparation - 2025	te Preparation - 202	Grading - 2025	Grading - 2026	Infrastructure - 2025	nfrastructure - 2026	Paving - 2025	rchitectural Coating - 202	Child Risk			
Unique Identifier	X (UTM)	Y (UTM)	1900	1900	1900	1900	1900	1900	2025	2026	1900	1900	3rd Trimester	0<2	Total	per million
396166.283767377.2	396166.28	3767377	0	0	0	0	0	0	3.83011E-06	3.83011E-06	0	0	5.19442E-11	3.1368E-10	3.65624E-10	0.0003656
396266.283767377.2	396266.28	3767377	0	0	0	0	0	0	3.91694E-06	3.91694E-06	0	0	5.31218E-11	3.20791E-10	3.73913E-10	0.0003739
396366.283767377.2	396366.28	3767377	0	0	0	0	0	0	4.07625E-06	4.07625E-06	0	0	5.52823E-11	3.33838E-10	3.8912E-10	0.0003891
396466.283767377.2	396466.28	3767377	0	0	0	0	0	0	4.18245E-06	4.18245E-06	0	0	5.67227E-11	3.42536E-10	3.99258E-10	0.0003993
396566.283767377.2	396566.28	3767377	0	0	0	0	0	0	4.58512E-06	4.58512E-06	0	0	6.21836E-11	3.75513E-10	4.37697E-10	0.0004377
396666.283767377.2	396666.28	3767377	0	0	0	0	0	0	4.33497E-06	4.33497E-06	0	0	5.87912E-11	3.55027E-10	4.13818E-10	0.0004138
396766.283767377.2	396766.28	3767377	0	0	0	0	0	0	4.31797E-06	4.31797E-06	0	0	5.85606E-11	3.53635E-10	4.12195E-10	0.0004122
396866.283767377.2	396866.28	3767377	0	0	0	0	0	0	4.32176E-06	4.32176E-06	0	0	5.86119E-11	3.53944E-10	4.12556E-10	0.0004126
396966.283767377.2	396966.28	3767377	0	0	0	0	0	0	4.37894E-06	4.37894E-06	0	0	5.93874E-11	3.58628E-10	4.18015E-10	0.000418
397066.283767377.2	397066.28	3767377	0	0	0	0	0	0	4.26851E-06	4.26851E-06	0	0	5.78898E-11	3.49584E-10	4.07473E-10	0.0004075
397166.283767377.2	397166.28	3767377	0	0	0	0	0	0	4.21012E-06	4.21012E-06	0	0	5.70979E-11	3.44802E-10	4.019E-10	0.0004019
397266.283767377.2	397266.28	3767377	0	0	0	0	0	0	4.2152E-06	4.2152E-06	0	0	5.71668E-11	3.45218E-10	4.02385E-10	0.0004024
397366.283767377.2	397366.28	3767377	0	0	0	0	0	0	4.02305E-06	4.02305E-06	0	0	5.45609E-11	3.29481E-10	3.84042E-10	0.000384
397466.283767377.2	397466.28	3767377	0	0	0	0	0	0	3.62179E-06	3.62179E-06	0	0	4.91189E-11	2.96618E-10	3.45737E-10	0.0003457
397566.283767377.2	397566.28	3767377	0	0	0	0	0	0	3.56251E-06	3.56251E-06	0	0	4.83149E-11	2.91763E-10	3.40078E-10	0.0003401
397666.283767377.2	397666.28	3767377	0	0	0	0	0	0	3.45794E-06	3.45794E-06	0	0	4.68967E-11	2.83199E-10	3.30096E-10	0.0003301
397766.283767377.2	397766.28	3767377	0	0	0	0	0	0	3.56871E-06	3.56871E-06	0	0	4.83991E-11	2.92272E-10	3.40671E-10	0.0003407
397866.283767377.2	397866.28	3767377	0	0	0	0	0	0	3.39922E-06	3.39922E-06	0	0	4.61004E-11	2.7839E-10	3.24491E-10	0.0003245
396166.283767477.2	396166.28	3767477	0	0	0	0	0	0	4.40759E-06	4.40759E-06	0	0	5.9776E-11	3.60974E-10	4.2075E-10	0.0004208
396266.283767477.2	396266.28	3767477	0	0	0	0	0	0	4.30668E-06	4.30668E-06	0	0	5.84075E-11	3.5271E-10	4.11118E-10	0.0004111
396366.283767477.2	396366.28	3767477	0	0	0	0	0	0	4.53722E-06	4.53722E-06	0	0	6.1534E-11	3.7159E-10	4.33124E-10	0.0004331
396466.283767477.2	396466.28	3767477	0	0	0	0	0	0	4.96939E-06	4.96939E-06	0	0	6.73951E-11	4.06985E-10	4.7438E-10	0.0004744
396566.283767477.2	396566.28	3767477	0	0	0	0	0	0	5.03692E-06	5.03692E-06	0	0	6.83109E-11	4.12515E-10	4.80826E-10	0.0004808
396666.283767477.2	396666.28	3767477	0	0	0	0	0	0	4.89066E-06	4.89066E-06	0	0	6.63274E-11	4.00537E-10	4.66864E-10	0.0004669
396766.283767477.2	396766.28	3767477	0	0	0	0	0	0	4.92892E-06	4.92892E-06	0	0	6.68462E-11	4.0367E-10	4.70516E-10	0.0004705
396866.283767477.2	396866.28	3767477	0	0	0	0	0	0	4.9577E-06	4.9577E-06	0	0	6.72366E-11	4.06027E-10	4.73263E-10	0.0004733
396966.283767477.2	396966.28	3767477	0	0	0	0	0	0	5.0315E-06	5.0315E-06	0	0	6.82375E-11	4.12071E-10	4.80309E-10	0.0004803
397066.283767477.2	397066.28	3767477	0	0	0	0	0	0	4.93481E-06	4.93481E-06	0	0	6.69261E-11	4.04152E-10	4.71078E-10	0.0004711
397166.283767477.2	397166.28	3767477	0	0	0	0	0	0	4.77938E-06	4.77938E-06	0	0	6.48183E-11	3.91423E-10	4.56242E-10	0.0004562
397266.283767477.2	397266.28	3767477	0	0	0	0	0	0	4.79518E-06	4.79518E-06	0	0	6.50325E-11	3.92717E-10	4.57749E-10	0.0004577
397366.283767477.2	397366.28	3767477	0	0	0	0	0	0	4.65093E-06	4.65093E-06	0	0	6.30761E-11	3.80903E-10	4.43979E-10	0.000444
397466.283767477.2	397466.28	3767477	0	0	0	0	0	0	4.19494E-06	4.19494E-06	0	0	5.6892E-11	3.43558E-10	4.0045E-10	0.0004005
397566.283767477.2	397566.28	3767477	0	0	0	0	0	0	3.9783E-06	3.9783E-06	0	0	5.3954E-11	3.25816E-10	3.7977E-10	0.0003798
397666.283767477.2	397666.28	3767477	0	0	0	0	0	0	3.89105E-06	3.89105E-06	0	0	5.27707E-11	3.18671E-10	3.71441E-10	0.0003714
397766.283767477.2	397766.28	3767477	0	0	0	0	0	0	3.79864E-06	3.79864E-06	0	0	5.15174E-11	3.11102E-10	3.62619E-10	0.0003626
397866.283767477.2	397866.28	3767477	0	0	0	0	0	0	3.65582E-06	3.65582E-06	0	0	4.95804E-11	2.99405E-10	3.48985E-10	0.000349
396166.283767577.2	396166.28	3767577	0	0	0	0	0	0	4.64617E-06	4.64617E-06	0	0	6.30116E-11	3.80513E-10	4.43525E-10	0.0004435
396266.283767577.2	396266.28	3767577	0	0	0	0	0	0	4.77621E-06	4.77621E-06	0	0	6.47752E-11	3.91163E-10	4.55939E-10	0.0004559
396366.283767577.2	396366.28	3767577	0	0	0	0	0	0	4.99528E-06	4.99528E-06	0	0	6.77463E-11	4.09105E-10	4.76851E-10	0.0004769
396466.283767577.2	396466.28	3767577	0	0	0	0	0	0	5.30423E-06	5.30423E-06	0	0	7.19363E-11	4.34407E-10	5.06344E-10	0.0005063
396566.283767577.2	396566.28	3767577	0	0	0	0	0	0	5.89209E-06	5.89209E-06	0	0	7.99089E-11	4.82552E-10	5.62461E-10	0.0005625
396666.283767577.2	396666.28	3767577	0	0	0	0	0	0	5.9828E-06	5.9828E-06	0	0	8.1139E-11	4.89981E-10	5.7112E-10	0.0005711
396766.283767577.2	396766.28	3767577	0	0	0	0	0	0	5.64161E-06	5.64161E-06	0	0	7.65119E-11	4.62038E-10	5.3855E-10	0.0005386
396866.283767577.2	396866.28	3767577	0	0	0	0	0	0	5.78386E-06	5.78386E-06	0	0	7.8441E-11	4.73688E-10	5.52129E-10	0.0005521

Garvey Reservoir Rehab - Unmitigated I/O Tower			Demolition - 2025	Demolition - 2026	Site Preparation - 2025	ite Preparation - 202	Grading - 2025	Grading - 2026	Infrastructure - 2025	nfrastructure - 2026	Paving - 2025	rchitectural Coating - 202	Child Risk			
Unique Identifier	X (UTM)	Y (UTM)	1900	1900	1900	1900	1900	1900	2025	2026	1900	1900	3rd Trimester	0<2	Total	per million
396966.283767577.2	396966.28	3767577	0	0	0	0	0	0	5.86296E-06	5.86296E-06	0	0	7.95138E-11	4.80166E-10	5.5968E-10	0.0005597
397066.283767577.2	397066.28	3767577	0	0	0	0	0	0	5.86437E-06	5.86437E-06	0	0	7.95329E-11	4.80282E-10	5.59815E-10	0.0005598
397166.283767577.2	397166.28	3767577	0	0	0	0	0	0	5.64799E-06	5.64799E-06	0	0	7.65984E-11	4.62561E-10	5.39159E-10	0.0005392
397266.283767577.2	397266.28	3767577	0	0	0	0	0	0	5.57311E-06	5.57311E-06	0	0	7.55828E-11	4.56428E-10	5.32011E-10	0.000532
397366.283767577.2	397366.28	3767577	0	0	0	0	0	0	5.43422E-06	5.43422E-06	0	0	7.36991E-11	4.45053E-10	5.18752E-10	0.0005188
397466.283767577.2	397466.28	3767577	0	0	0	0	0	0	4.84076E-06	4.84076E-06	0	0	6.56506E-11	3.9645E-10	4.621E-10	0.0004621
397566.283767577.2	397566.28	3767577	0	0	0	0	0	0	4.56601E-06	4.56601E-06	0	0	6.19244E-11	3.73948E-10	4.35873E-10	0.0004359
397666.283767577.2	397666.28	3767577	0	0	0	0	0	0	4.31766E-06	4.31766E-06	0	0	5.85564E-11	3.53609E-10	4.12165E-10	0.0004122
397766.283767577.2	397766.28	3767577	0	0	0	0	0	0	4.15353E-06	4.15353E-06	0	0	5.63304E-11	3.40167E-10	3.96497E-10	0.0003965
397866.283767577.2	397866.28	3767577	0	0	0	0	0	0	3.94844E-06	3.94844E-06	0	0	5.3549E-11	3.23371E-10	3.7692E-10	0.0003769
396166.283767677.2	396166.28	3767677	0	0	0	0	0	0	5.62549E-06	5.62549E-06	0	0	7.62932E-11	4.60718E-10	5.37011E-10	0.000537
396266.283767677.2	396266.28	3767677	0	0	0	0	0	0	5.32253E-06	5.32253E-06	0	0	7.21845E-11	4.35906E-10	5.08091E-10	0.0005081
396366.283767677.2	396366.28	3767677	0	0	0	0	0	0	5.67165E-06	5.67165E-06	0	0	7.69192E-11	4.64498E-10	5.41417E-10	0.0005414
396466.283767677.2	396466.28	3767677	0	0	0	0	0	0	6.70851E-06	6.70851E-06	0	0	9.09811E-11	5.49415E-10	6.40396E-10	0.0006404
396566.283767677.2	396566.28	3767677	0	0	0	0	0	0	6.76935E-06	6.76935E-06	0	0	9.18063E-11	5.54398E-10	6.46205E-10	0.0006462
396666.283767677.2	396666.28	3767677	0	0	0	0	0	0	6.34121E-06	6.34121E-06	0	0	8.59999E-11	5.19335E-10	6.05334E-10	0.0006053
396766.283767677.2	396766.28	3767677	0	0	0	0	0	0	6.60139E-06	6.60139E-06	0	0	8.95284E-11	5.40643E-10	6.30171E-10	0.0006302
396866.283767677.2	396866.28	3767677	0	0	0	0	0	0	6.97234E-06	6.97234E-06	0	0	9.45593E-11	5.71023E-10	6.65582E-10	0.0006656
396966.283767677.2	396966.28	3767677	0	0	0	0	0	0	7.04825E-06	7.04825E-06	0	0	9.55887E-11	5.77239E-10	6.72828E-10	0.0006728
397066.283767677.2	397066.28	3767677	0	0	0	0	0	0	7.02703E-06	7.02703E-06	0	0	9.5301E-11	5.75502E-10	6.70803E-10	0.0006708
397166.283767677.2	397166.28	3767677	0	0	0	0	0	0	6.87159E-06	6.87159E-06	0	0	9.31929E-11	5.62772E-10	6.55964E-10	0.000656
397266.283767677.2	397266.28	3767677	0	0	0	0	0	0	6.30158E-06	6.30158E-06	0	0	8.54624E-11	5.16089E-10	6.01551E-10	0.0006016
397366.283767677.2	397366.28	3767677	0	0	0	0	0	0	6.41003E-06	6.41003E-06	0	0	8.69332E-11	5.24971E-10	6.11904E-10	0.0006119
397466.283767677.2	397466.28	3767677	0	0	0	0	0	0	5.51298E-06	5.51298E-06	0	0	7.47673E-11	4.51503E-10	5.26271E-10	0.0005263
397566.283767677.2	397566.28	3767677	0	0	0	0	0	0	5.28934E-06	5.28934E-06	0	0	7.17343E-11	4.33188E-10	5.04922E-10	0.0005049
397666.283767677.2	397666.28	3767677	0	0	0	0	0	0	4.98117E-06	4.98117E-06	0	0	6.75549E-11	4.07949E-10	4.75504E-10	0.0004755
397766.283767677.2	397766.28	3767677	0	0	0	0	0	0	4.64986E-06	4.64986E-06	0	0	6.30616E-11	3.80815E-10	4.43877E-10	0.0004439
397866.283767677.2	397866.28	3767677	0	0	0	0	0	0	4.42501E-06	4.42501E-06	0	0	6.00123E-11	3.62401E-10	4.22413E-10	0.0004224
396166.283767777.2	396166.28	3767777	0	0	0	0	0	0	6.31355E-06	6.31355E-06	0	0	8.56247E-11	5.17069E-10	6.02694E-10	0.0006027
396266.283767777.2	396266.28	3767777	0	0	0	0	0	0	7.17219E-06	7.17219E-06	0	0	9.72697E-11	5.8739E-10	6.8466E-10	0.0006847
396366.283767777.2	396366.28	3767777	0	0	0	0	0	0	6.98034E-06	6.98034E-06	0	0	9.46677E-11	5.71678E-10	6.66346E-10	0.0006663
396466.283767777.2	396466.28	3767777	0	0	0	0	0	0	7.36938E-06	7.36938E-06	0	0	9.9944E-11	6.0354E-10	7.03484E-10	0.0007035
396566.283767777.2	396566.28	3767777	0	0	0	0	0	0	6.97725E-06	6.97725E-06	0	0	9.46258E-11	5.71425E-10	6.66051E-10	0.0006661
396666.283767777.2	396666.28	3767777	0	0	0	0	0	0	7.33794E-06	7.33794E-06	0	0	9.95176E-11	6.00965E-10	7.00483E-10	0.0007005
396766.283767777.2	396766.28	3767777	0	0	0	0	0	0	8.04307E-06	8.04307E-06	0	0	1.09081E-10	6.58714E-10	7.67794E-10	0.0007678
396866.283767777.2	396866.28	3767777	0	0	0	0	0	0	8.58934E-06	8.58934E-06	0	0	1.16489E-10	7.03452E-10	8.19941E-10	0.0008199
396966.283767777.2	396966.28	3767777	0	0	0	0	0	0	8.48403E-06	8.48403E-06	0	0	1.15061E-10	6.94828E-10	8.09888E-10	0.0008099
397066.283767777.2	397066.28	3767777	0	0	0	0	0	0	8.49567E-06	8.49567E-06	0	0	1.15219E-10	6.95781E-10	8.10999E-10	0.000811
397166.283767777.2	397166.28	3767777	0	0	0	0	0	0	8.50727E-06	8.50727E-06	0	0	1.15376E-10	6.96731E-10	8.12107E-10	0.0008121
397266.283767777.2	397266.28	3767777	0	0	0	0	0	0	7.91515E-06	7.91515E-06	0	0	1.07346E-10	6.48237E-10	7.55583E-10	0.0007556
397366.283767777.2	397366.28	3767777	0	0	0	0	0	0	7.76167E-06	7.76167E-06	0	0	1.05264E-10	6.35667E-10	7.40931E-10	0.0007409
397466.283767777.2	397466.28	3767777	0	0	0	0	0	0	6.69808E-06	6.69808E-06	0	0	9.08398E-11	5.48561E-10	6.39401E-10	0.0006394
397566.283767777.2	397566.28	3767777	0	0	0	0	0	0	6.17864E-06	6.17864E-06	0	0	8.37951E-11	5.0602E-10	5.89815E-10	0.0005898
397666.283767777.2	397666.28	3767777	0	0	0	0	0	0	5.88008E-06	5.88008E-06	0	0	7.9746E-11	4.81569E-10	5.61315E-10	0.0005613
397766.283767777.2	397766.28	3767777	0	0	0	0	0	0	5.25012E-06	5.25012E-06	0	0	7.12025E-11	4.29976E-10	5.01179E-10	0.0005012
397866.283767777.2	397866.28	3767777	0	0	0	0	0	0	4.7865E-06	4.7865E-06	0	0	6.49148E-11	3.92007E-10	4.56921E-10	0.0004569
396166.283767877.2	396166.28	3767877	0	0	0	0	0	0	6.97761E-06	6.97761E-06	0	0	9.46308E-11	5.71455E-10	6.66086E-10	0.0006661
396266.283767877.2	396266.28	3767877	0	0	0	0	0	0	8.05927E-06	8.05927E-06	0	0	1.093E-10	6.6004E-10	7.6934E-10	0.0007693
396366.283767877.2	396366.28	3767877	0	0	0	0	0	0	8.5193E-06	8.5193E-06	0	0	1.15539E-10	6.97716E-10	8.13255E-10	0.0008133
396466.283767877.2	396466.28	3767877	0	0	0	0	0	0	8.08394E-06	8.08394E-06	0	0	1.09635E-10	6.62061E-10	7.71696E-10	0.0007717
396566.283767877.2	396566.28	3767877	0	0	0	0	0	0	8.00101E-06	8.00101E-06	0	0	1.0851E-10	6.55269E-10	7.63779E-10	0.0007638
397466.283767877.2	397466.28	3767877	0	0	0	0	0	0	9.38054E-06	9.38054E-06	0	0	1.27219E-10	7.6825E-10	8.95469E-10	0.0008955
397566.283767877.2	397566.28	3767877	0	0	0	0	0	0	7.38854E-06	7.38854E-06	0	0	1.00204E-10	6.05109E-10	7.05313E-10	0.0007053
397666.283767877.2	397666.28	3767877	0	0	0	0	0	0	6.22835E-06	6.22835E-06	0	0	8.44692E-11	5.10091E-10	5.9456E-10	0.0005946
397766.283767877.2	397766.28	3767877	0	0	0	0	0	0	5.51313E-06	5.51313E-06	0	0	7.47694E-11	4.51516E-10	5.26286E-10	0.0005263
397866.283767877.2	397866.28	3767877	0	0	0	0	0	0	5.52227E-06	5.52227E-06	0	0	7.48934E-11	4.52265E-10	5.27158E-10	0.0005272
396166.283767977.2	396166.28	3767977	0	0	0	0	0	0	7.31371E-06	7.31371E-06	0	0	9.91889E-11	5.9898E-10	6.98169E-10	0.0006982
396266.283767977.2	396266.28	3767977	0	0	0	0	0	0	8.45174E-06	8.45174E-06	0	0	1.14623E-10	6.92183E-10	8.06806E-10	0.0008068
396366.283767977.2	396366.28	3767977	0	0	0	0	0	0	9.14145E-06	9.14145E-06	0	0	1.23977E-10	7.48669E-10	8.72646E-10	0.0008726
396466.283767977.2	396466.28	3767977	0	0	0	0	0	0	8.78313E-06	8.78313E-06	0	0	1.19117E-10	7.19323E-10	8.3844E-10	0.0008384
397466.283767977.2	397466.28	3767977	0	0	0	0	0	0	1.10631E-05	1.10631E-05	0	0	1.50039E-10	9.06051E-10	1.05609E-09	0.0010561
397566.283767977.2	397566.28	3767977	0	0	0	0	0	0	8.93416E-06	8.93416E-06	0	0	1.21166E-10	7.31692E-10	8.52858E-10	0.0008529
397666.283767977.2	397666.28	3767977	0	0	0	0	0	0	7.41573E-06	7.41573E-06	0	0	1.00573E-10	6.07336E-10	7.07908E-10	0.0007079
397766.283767977.2	397766.28	3767977	0	0	0	0	0	0	7.47003E-06	7.47003E-06	0	0	1.01309E-10	6.11783E-10	7.13092E-10	0.0007131
397866.283767977.2	397866.28	3767977	0	0	0	0	0	0	6.83119E-06	6.83119E-06	0	0	9.2645E-11	5.59463E-10	6.52108E-10	0.0006521
396166.283768077.2	396166.28	3768077	0	0	0	0	0	0	9.85953E-06	9.85953E-06	0	0	1.33715E-10	8.07478E-10	9.41194E-10	0.0009412
396266.283768077.2	396266.28	3768077	0	0	0	0	0	0	9.34415E-06	9.34415E-06	0	0	1.26726E-10	7.6527E-10	8.91996E-10	0.000892
396366.283768077.2	396366.28	3768077	0	0	0	0	0	0	1.014E-05	1.014E-05	0	0	1.3752E-10	8.30452E-10	9.67972E-10	0.000968
396466.283768077.2	396466.28	3768077	0	0	0	0	0	0	1.09769E-05	1.09769E-05	0	0	1.48869E-10	8.98988E-10	1.04786E-09	0.0010479
397466.283768077.2	397466.28	3768077	0	0	0	0	0	0	1.91987E-05	1.91987E-05	0	0	2.60374E-10	1.57234E-09	1.83271E-09	0.0018327
397566.283768077.2	397566.28	3768077	0	0	0	0	0	0	1.51719E-05	1.51719E-05	0	0	2.05763E-10	1.24256E-09	1.44832E-09	0.0014483

Garvey Reservoir Rehab - Unmitigated I/O Tower			Demolition - 2025	Demolition - 2026	Site Preparation - 2025	ite Preparation - 202	Grading - 2025	Grading - 2026	Infrastructure - 2025	nfrastructure - 2026	Paving - 2025	rchitectural Coating - 202	Child Risk			
Unique Identifier	X (UTM)	Y (UTM)	1900	1900	1900	1900	1900	1900	2025	2026	1900	1900	3rd Trimester	0<2	Total	per million
397666.283768077.2	397666.28	3768077	0	0	0	0	0	0	1.13827E-05	1.13827E-05	0	0	1.54373E-10	9.32224E-10	1.0866E-09	0.0010866
397766.283768077.2	397766.28	3768077	0	0	0	0	0	0	8.88752E-06	8.88752E-06	0	0	1.20533E-10	7.27873E-10	8.48406E-10	0.0008484
397866.283768077.2	397866.28	3768077	0	0	0	0	0	0	7.70344E-06	7.70344E-06	0	0	1.04474E-10	6.30898E-10	7.35373E-10	0.0007354
396166.283768177.2	396166.28	3768177	0	0	0	0	0	0	1.18911E-05	1.18911E-05	0	0	1.61267E-10	9.73857E-10	1.13512E-09	0.0011351
396266.283768177.2	396266.28	3768177	0	0	0	0	0	0	1.22816E-05	1.22816E-05	0	0	1.66564E-10	1.00584E-09	1.17241E-09	0.0011724
396366.283768177.2	396366.28	3768177	0	0	0	0	0	0	1.337E-05	1.337E-05	0	0	1.81325E-10	1.09498E-09	1.2763E-09	0.0012763
396466.283768177.2	396466.28	3768177	0	0	0	0	0	0	1.31649E-05	1.31649E-05	0	0	1.78543E-10	1.07818E-09	1.25672E-09	0.0012567
397466.283768177.2	397466.28	3768177	0	0	0	0	0	0	4.19871E-05	4.19871E-05	0	0	5.69432E-10	3.43867E-09	4.0081E-09	0.0040081
397566.283768177.2	397566.28	3768177	0	0	0	0	0	0	2.20253E-05	2.20253E-05	0	0	2.98708E-10	1.80383E-09	2.10254E-09	0.0021025
397666.283768177.2	397666.28	3768177	0	0	0	0	0	0	1.50304E-05	1.50304E-05	0	0	2.03843E-10	1.23096E-09	1.43481E-09	0.0014348
397766.283768177.2	397766.28	3768177	0	0	0	0	0	0	1.10837E-05	1.10837E-05	0	0	1.50318E-10	9.0774E-10	1.05806E-09	0.0010581
397866.283768177.2	397866.28	3768177	0	0	0	0	0	0	9.09468E-06	9.09468E-06	0	0	1.23343E-10	7.44839E-10	8.68181E-10	0.0008682
396166.283768277.2	396166.28	3768277	0	0	0	0	0	0	1.41424E-05	1.41424E-05	0	0	1.918E-10	1.15824E-09	1.35004E-09	0.00135
396266.283768277.2	396266.28	3768277	0	0	0	0	0	0	1.39172E-05	1.39172E-05	0	0	1.88746E-10	1.13979E-09	1.32854E-09	0.0013285
396366.283768277.2	396366.28	3768277	0	0	0	0	0	0	1.56228E-05	1.56228E-05	0	0	2.11877E-10	1.27948E-09	1.49136E-09	0.0014914
396466.283768277.2	396466.28	3768277	0	0	0	0	0	0	1.61667E-05	1.61667E-05	0	0	2.19254E-10	1.32403E-09	1.54328E-09	0.0015433
397366.283768277.2	397366.28	3768277	0	0	0	0	0	0	0.000333703	0.000333703	0	0	4.5257E-09	2.73297E-08	3.18554E-08	0.0318554
397466.283768277.2	397466.28	3768277	0	0	0	0	0	0	6.55061E-05	6.55061E-05	0	0	8.88398E-10	5.36484E-09	6.25324E-09	0.0062532
397566.283768277.2	397566.28	3768277	0	0	0	0	0	0	2.99056E-05	2.99056E-05	0	0	4.05581E-10	2.44921E-09	2.8548E-09	0.0028548
397666.283768277.2	397666.28	3768277	0	0	0	0	0	0	1.87384E-05	1.87384E-05	0	0	2.54131E-10	1.53464E-09	1.78877E-09	0.0017888
397766.283768277.2	397766.28	3768277	0	0	0	0	0	0	1.3423E-05	1.3423E-05	0	0	1.82044E-10	1.09932E-09	1.28137E-09	0.0012814
397866.283768277.2	397866.28	3768277	0	0	0	0	0	0	1.03337E-05	1.03337E-05	0	0	1.40146E-10	8.46309E-10	9.86455E-10	0.0009865
396166.283768377.2	396166.28	3768377	0	0	0	0	0	0	1.6667E-05	1.6667E-05	0	0	2.26038E-10	1.365E-09	1.59104E-09	0.001591
396266.283768377.2	396266.28	3768377	0	0	0	0	0	0	1.73546E-05	1.73546E-05	0	0	2.35364E-10	1.42131E-09	1.65668E-09	0.0016567
396366.283768377.2	396366.28	3768377	0	0	0	0	0	0	1.93763E-05	1.93763E-05	0	0	2.62783E-10	1.58689E-09	1.84967E-09	0.0018497
396466.283768377.2	396466.28	3768377	0	0	0	0	0	0	2.09048E-05	2.09048E-05	0	0	2.83512E-10	1.71207E-09	1.99558E-09	0.0019956
397266.283768377.2	397266.28	3768377	0	0	0	0	0	0	0.000523875	0.000523875	0	0	7.10482E-09	4.29044E-08	5.00093E-08	0.0500093
397366.283768377.2	397366.28	3768377	0	0	0	0	0	0	0.000235623	0.000235623	0	0	3.19553E-09	1.92971E-08	2.24926E-08	0.0224926
397466.283768377.2	397466.28	3768377	0	0	0	0	0	0	7.603E-05	7.603E-05	0	0	1.03112E-09	6.22672E-09	7.25785E-09	0.0072578
397566.283768377.2	397566.28	3768377	0	0	0	0	0	0	3.65004E-05	3.65004E-05	0	0	4.95021E-10	2.98932E-09	3.48434E-09	0.0034843
397666.283768377.2	397666.28	3768377	0	0	0	0	0	0	2.21244E-05	2.21244E-05	0	0	3.00052E-10	1.81195E-09	2.112E-09	0.002112
397766.283768377.2	397766.28	3768377	0	0	0	0	0	0	1.55538E-05	1.55538E-05	0	0	2.10942E-10	1.27383E-09	1.48477E-09	0.0014848
397866.283768377.2	397866.28	3768377	0	0	0	0	0	0	1.11884E-05	1.11884E-05	0	0	1.51738E-10	9.16313E-10	1.06805E-09	0.0010681
396166.283768477.2	396166.28	3768477	0	0	0	0	0	0	2.04481E-05	2.04481E-05	0	0	2.77319E-10	1.67467E-09	1.95199E-09	0.001952
396266.283768477.2	396266.28	3768477	0	0	0	0	0	0	2.20367E-05	2.20367E-05	0	0	2.98864E-10	1.80477E-09	2.10364E-09	0.0021036
396366.283768477.2	396366.28	3768477	0	0	0	0	0	0	2.44257E-05	2.44257E-05	0	0	3.31263E-10	2.00042E-09	2.33169E-09	0.0023317
396466.283768477.2	396466.28	3768477	0	0	0	0	0	0	2.73511E-05	2.73511E-05	0	0	3.70938E-10	2.24001E-09	2.61095E-09	0.0026109
397166.283768477.2	397166.28	3768477	0	0	0	0	0	0	9.73672E-05	9.73672E-05	0	0	1.3205E-09	7.97421E-09	9.29471E-09	0.0092947
397266.283768477.2	397266.28	3768477	0	0	0	0	0	0	0.000531762	0.000531762	0	0	7.21178E-09	4.35504E-08	5.07622E-08	0.0507622
397366.283768477.2	397366.28	3768477	0	0	0	0	0	0	0.000215441	0.000215441	0	0	2.92182E-09	1.76442E-08	2.05661E-08	0.0205661
397466.283768477.2	397466.28	3768477	0	0	0	0	0	0	7.00666E-05	7.00666E-05	0	0	9.50247E-10	5.73833E-09	6.68858E-09	0.0066886
397566.283768477.2	397566.28	3768477	0	0	0	0	0	0	4.18824E-05	4.18824E-05	0	0	5.68011E-10	3.4301E-09	3.99811E-09	0.0039981
397666.283768477.2	397666.28	3768477	0	0	0	0	0	0	2.59892E-05	2.59892E-05	0	0	3.52467E-10	2.12847E-09	2.48094E-09	0.0024809
397766.283768477.2	397766.28	3768477	0	0	0	0	0	0	1.64422E-05	1.64422E-05	0	0	2.22991E-10	1.34659E-09	1.56958E-09	0.0015696
397866.283768477.2	397866.28	3768477	0	0	0	0	0	0	1.28178E-05	1.28178E-05	0	0	1.73836E-10	1.04976E-09	1.22359E-09	0.0012236
396166.283768577.2	396166.28	3768577	0	0	0	0	0	0	2.60193E-05	2.60193E-05	0	0	3.52875E-10	2.13093E-09	2.48381E-09	0.0024838
396266.283768577.2	396266.28	3768577	0	0	0	0	0	0	2.93301E-05	2.93301E-05	0	0	3.97777E-10	2.40209E-09	2.79986E-09	0.0027999
396366.283768577.2	396366.28	3768577	0	0	0	0	0	0	3.16434E-05	3.16434E-05	0	0	4.2915E-10	2.59154E-09	3.02069E-09	0.0030207
396466.283768577.2	396466.28	3768577	0	0	0	0	0	0	3.79976E-05	3.79976E-05	0	0	5.15326E-10	3.11194E-09	3.62726E-09	0.0036273
396566.283768577.2	396566.28	3768577	0	0	0	0	0	0	3.72132E-05	3.72132E-05	0	0	5.04687E-10	3.04769E-09	3.55238E-09	0.0035524
396866.283768577.2	396866.28	3768577	0	0	0	0	0	0	4.76217E-05	4.76217E-05	0	0	6.45848E-10	3.90014E-09	4.54599E-09	0.004546
396966.283768577.2	396966.28	3768577	0	0	0	0	0	0	5.52952E-05	5.52952E-05	0	0	7.49917E-10	4.52858E-09	5.2785E-09	0.0052785
397066.283768577.2	397066.28	3768577	0	0	0	0	0	0	6.83391E-05	6.83391E-05	0	0	9.26819E-10	5.59686E-09	6.52368E-09	0.0065237
397166.283768577.2	397166.28	3768577	0	0	0	0	0	0	0.000117007	0.000117007	0	0	1.58685E-09	9.58265E-09	1.11695E-08	0.0111695
397266.283768577.2	397266.28	3768577	0	0	0	0	0	0	0.000515848	0.000515848	0	0	6.99596E-09	4.22471E-08	4.9243E-08	0.049243
397366.283768577.2	397366.28	3768577	0	0	0	0	0	0	0.000216068	0.000216068	0	0	2.93032E-09	1.76956E-08	2.06259E-08	0.0206259
397466.283768577.2	397466.28	3768577	0	0	0	0	0	0	6.92328E-05	6.92328E-05	0	0	9.38939E-10	5.67005E-09	6.60898E-09	0.006609
397566.283768577.2	397566.28	3768577	0	0	0	0	0	0	4.14429E-05	4.14429E-05	0	0	5.62051E-10	3.3941E-09	3.95615E-09	0.0039562
397666.283768577.2	397666.28	3768577	0	0	0	0	0	0	2.75516E-05	2.75516E-05	0	0	3.73657E-10	2.25643E-09	2.63009E-09	0.0026301
397766.283768577.2	397766.28	3768577	0	0	0	0	0	0	1.96067E-05	1.96067E-05	0	0	2.65907E-10	1.60575E-09	1.87166E-09	0.0018717
397866.283768577.2	397866.28	3768577	0	0	0	0	0	0	1.43156E-05	1.43156E-05	0	0	1.94149E-10	1.17242E-09	1.36657E-09	0.0013666
396166.283768677.2	396166.28	3768677	0	0	0	0	0	0	4.57094E-05	4.57094E-05	0	0	6.19913E-10	3.74352E-09	4.36343E-09	0.0043634
396266.283768677.2	396266.28	3768677	0	0	0	0	0	0	5.21859E-05	5.21859E-05	0	0	7.07749E-10	4.27394E-09	4.98169E-09	0.0049817
396366.283768677.2	396366.28	3768677	0	0	0	0	0	0	5.06731E-05	5.06731E-05	0	0	6.87231E-10	4.15004E-09	4.83727E-09	0.0048373
396466.283768677.2	396466.28	3768677	0	0	0	0	0	0	6.22106E-05	6.22106E-05	0	0	8.43704E-10	5.09494E-09	5.93865E-09	0.0059386
396566.283768677.2	396566.28	3768677	0	0	0	0	0	0	6.28893E-05	6.28893E-05	0	0	8.52909E-10	5.15053E-09	6.00344E-09	0.0060034
396666.283768677.2	396666.28	3768677	0	0	0	0	0	0	6.42071E-05	6.42071E-05	0	0	8.7078E-10	5.25845E-09	6.12923E-09	0.0061292
396766.283768677.2	396766.28	3768677	0	0	0	0	0	0	6.66299E-05	6.66299E-05	0	0	9.03639E-10	5.45688E-09	6.36051E-09	0.0063605
396866.283768677.2	396866.28	3768677	0	0	0	0	0	0	7.3998E-05	7.3998E-05	0	0	1.00356E-09	6.06031E-09	7.06387E-09	0.0070639
396966.283768677.2	396966.28	3768677	0	0	0	0	0	0	8.09988E-05	8.09988E-05	0	0	1.09851E-09	6.63366E-09	7.73217E-09	0.0077322
397066.283768677.2	397066.28	3768677	0	0	0	0	0	0	9.39578E-05	9.39578E-05	0	0	1.27426E-09	7.69498E-09	8.96924E-09	0.0089692

Garvey Reservoir Rehab - Unmitigated I/O Tower			Demolition - 2025	Demolition - 2026	Site Preparation - 2025	ite Preparation - 202	Grading - 2025	Grading - 2026	Infrastructure - 2025	nfrastructure - 2026	Paving - 2025	rchitectural Coating - 202	Child Risk			
Unique Identifier	X (UTM)	Y (UTM)	1900	1900	1900	1900	1900	1900	2025	2026	1900	1900	3rd Trimester	0<2	Total	per million
397166.283768677.2	397166.28	3768677	0	0	0	0	0	0	0.000147469	0.000147469	0	0	1.99998E-09	1.20774E-08	1.40774E-08	0.0140774
397366.283768677.2	397366.28	3768677	0	0	0	0	0	0	0.000196102	0.000196102	0	0	2.65955E-09	1.60604E-08	1.872E-08	0.01872
397466.283768677.2	397466.28	3768677	0	0	0	0	0	0	7.90103E-05	7.90103E-05	0	0	1.07154E-09	6.47081E-09	7.54235E-09	0.0075424
397566.283768677.2	397566.28	3768677	0	0	0	0	0	0	4.30868E-05	4.30868E-05	0	0	5.84345E-10	3.52873E-09	4.11308E-09	0.0041131
397666.283768677.2	397666.28	3768677	0	0	0	0	0	0	2.82298E-05	2.82298E-05	0	0	3.82854E-10	2.31197E-09	2.69482E-09	0.0026948
397766.283768677.2	397766.28	3768677	0	0	0	0	0	0	2.08218E-05	2.08218E-05	0	0	2.82386E-10	1.70527E-09	1.98766E-09	0.0019877
397866.283768677.2	397866.28	3768677	0	0	0	0	0	0	1.52892E-05	1.52892E-05	0	0	2.07353E-10	1.25216E-09	1.45951E-09	0.0014595
396166.283768777.2	396166.28	3768777	0	0	0	0	0	0	0.000132727	0.000132727	0	0	1.80005E-09	1.08701E-08	1.26702E-08	0.0126702
396266.283768777.2	396266.28	3768777	0	0	0	0	0	0	0.000164923	0.000164923	0	0	2.23669E-09	1.35069E-08	1.57436E-08	0.0157436
396366.283768777.2	396366.28	3768777	0	0	0	0	0	0	0.000120907	0.000120907	0	0	1.63975E-09	9.90207E-09	1.15418E-08	0.0115418
396466.283768777.2	396466.28	3768777	0	0	0	0	0	0	0.000157991	0.000157991	0	0	2.14269E-09	1.29392E-08	1.50819E-08	0.0150819
396566.283768777.2	396566.28	3768777	0	0	0	0	0	0	0.000169188	0.000169188	0	0	2.29453E-09	1.38562E-08	1.61507E-08	0.0161507
396666.283768777.2	396666.28	3768777	0	0	0	0	0	0	0.000169128	0.000169128	0	0	2.29373E-09	1.38513E-08	1.61451E-08	0.0161451
396766.283768777.2	396766.28	3768777	0	0	0	0	0	0	0.000174954	0.000174954	0	0	2.37274E-09	1.43285E-08	1.67012E-08	0.0167012
396866.283768777.2	396866.28	3768777	0	0	0	0	0	0	0.000181896	0.000181896	0	0	2.46688E-09	1.48969E-08	1.73638E-08	0.0173638
396966.283768777.2	396966.28	3768777	0	0	0	0	0	0	0.000186382	0.000186382	0	0	2.52772E-09	1.52643E-08	1.7792E-08	0.017792
397066.283768777.2	397066.28	3768777	0	0	0	0	0	0	0.000200791	0.000200791	0	0	2.72314E-09	1.64445E-08	1.91676E-08	0.0191676
397166.283768777.2	397166.28	3768777	0	0	0	0	0	0	0.000241802	0.000241802	0	0	3.27934E-09	1.98032E-08	2.30825E-08	0.0230825
397266.283768777.2	397266.28	3768777	0	0	0	0	0	0	0.000771231	0.000771231	0	0	1.04595E-08	6.31625E-08	7.3622E-08	0.073622
397366.283768777.2	397366.28	3768777	0	0	0	0	0	0	0.000267969	0.000267969	0	0	3.63421E-09	2.19462E-08	2.55804E-08	0.0255804
397466.283768777.2	397466.28	3768777	0	0	0	0	0	0	9.42505E-05	9.42505E-05	0	0	1.27823E-09	7.71896E-09	8.99719E-09	0.0089972
397566.283768777.2	397566.28	3768777	0	0	0	0	0	0	5.0549E-05	5.0549E-05	0	0	6.85549E-10	4.13988E-09	4.82543E-09	0.0048254
397666.283768777.2	397666.28	3768777	0	0	0	0	0	0	3.17912E-05	3.17912E-05	0	0	4.31155E-10	2.60365E-09	3.0348E-09	0.0030348
397766.283768777.2	397766.28	3768777	0	0	0	0	0	0	2.17646E-05	2.17646E-05	0	0	2.95173E-10	1.78249E-09	2.07766E-09	0.0020777
397866.283768777.2	397866.28	3768777	0	0	0	0	0	0	1.58433E-05	1.58433E-05	0	0	2.14867E-10	1.29754E-09	1.5124E-09	0.0015124
396166.283768877.2	396166.28	3768877	0	0	0	0	0	0	0.000534373	0.000534373	0	0	7.24719E-09	4.37642E-08	5.10114E-08	0.0510114
396266.283768877.2	396266.28	3768877	0	0	0	0	0	0	0.000688214	0.000688214	0	0	9.3336E-09	5.63635E-08	6.56971E-08	0.0656971
396366.283768877.2	396366.28	3768877	0	0	0	0	0	0	0.000673899	0.000673899	0	0	9.13946E-09	5.51912E-08	6.43306E-08	0.0643306
396466.283768877.2	396466.28	3768877	0	0	0	0	0	0	0.000742351	0.000742351	0	0	1.00678E-08	6.07973E-08	7.08651E-08	0.0708651
396566.283768877.2	396566.28	3768877	0	0	0	0	0	0	0.00070014	0.00070014	0	0	9.49534E-09	5.73403E-08	6.68356E-08	0.0668356
396666.283768877.2	396666.28	3768877	0	0	0	0	0	0	0.000760661	0.000760661	0	0	1.03161E-08	6.22969E-08	7.2613E-08	0.072613
396766.283768877.2	396766.28	3768877	0	0	0	0	0	0	0.000736205	0.000736205	0	0	9.98445E-09	6.02939E-08	7.02784E-08	0.0702784
396866.283768877.2	396866.28	3768877	0	0	0	0	0	0	0.000715148	0.000715148	0	0	9.69888E-09	5.85694E-08	6.82683E-08	0.0682683
396966.283768877.2	396966.28	3768877	0	0	0	0	0	0	0.000687674	0.000687674	0	0	9.32627E-09	5.63193E-08	6.56456E-08	0.0656456
397066.283768877.2	397066.28	3768877	0	0	0	0	0	0	0.000695221	0.000695221	0	0	9.42863E-09	5.69374E-08	6.63661E-08	0.0663661
397166.283768877.2	397166.28	3768877	0	0	0	0	0	0	0.000714546	0.000714546	0	0	9.69072E-09	5.85201E-08	6.82108E-08	0.0682108
397266.283768877.2	397266.28	3768877	0	0	0	0	0	0	0.000750688	0.000750688	0	0	1.01809E-08	6.14801E-08	7.1661E-08	0.071661
397366.283768877.2	397366.28	3768877	0	0	0	0	0	0	0.000369107	0.000369107	0	0	5.00585E-09	3.02292E-08	3.52351E-08	0.0352351
397466.283768877.2	397466.28	3768877	0	0	0	0	0	0	9.87798E-05	9.87798E-05	0	0	1.33966E-09	8.0899E-09	9.42955E-09	0.0094296
397566.283768877.2	397566.28	3768877	0	0	0	0	0	0	5.05103E-05	5.05103E-05	0	0	6.85024E-10	4.13671E-09	4.82173E-09	0.0048217
397666.283768877.2	397666.28	3768877	0	0	0	0	0	0	3.1331E-05	3.1331E-05	0	0	4.24913E-10	2.56596E-09	2.99087E-09	0.0029909
397766.283768877.2	397766.28	3768877	0	0	0	0	0	0	2.16575E-05	2.16575E-05	0	0	2.9372E-10	1.77371E-09	2.06743E-09	0.0020674
397866.283768877.2	397866.28	3768877	0	0	0	0	0	0	1.60291E-05	1.60291E-05	0	0	2.17387E-10	1.31275E-09	1.53014E-09	0.0015301
3964253767739	396425	3767739	0	0	0	0	0	0	7.20397E-06	7.20397E-06	0	0	9.77007E-11	5.89993E-10	6.87694E-10	0.0006877
3964753767739	396475	3767739	0	0	0	0	0	0	7.37609E-06	7.37609E-06	0	0	1.00035E-10	6.04089E-10	7.04124E-10	0.0007041
3965253767739	396525	3767739	0	0	0	0	0	0	6.87507E-06	6.87507E-06	0	0	9.32401E-11	5.63057E-10	6.56297E-10	0.0006563
3965753767739	396575	3767739	0	0	0	0	0	0	7.07382E-06	7.07382E-06	0	0	9.59355E-11	5.79334E-10	6.75269E-10	0.0006753
3966253767739	396625	3767739	0	0	0	0	0	0	6.79381E-06	6.79381E-06	0	0	9.2138E-11	5.56401E-10	6.48539E-10	0.0006485
3966753767739	396675	3767739	0	0	0	0	0	0	6.95207E-06	6.95207E-06	0	0	9.42844E-11	5.69363E-10	6.63647E-10	0.0006636
3967253767739	396725	3767739	0	0	0	0	0	0	7.26558E-06	7.26558E-06	0	0	9.85362E-11	5.95039E-10	6.93575E-10	0.0006936
3967753767739	396775	3767739	0	0	0	0	0	0	7.32665E-06	7.32665E-06	0	0	9.93644E-11	6.0004E-10	6.99404E-10	0.0006994
3968253767739	396825	3767739	0	0	0	0	0	0	7.73952E-06	7.73952E-06	0	0	1.04964E-10	6.33854E-10	7.38817E-10	0.0007388
3968753767739	396875	3767739	0	0	0	0	0	0	7.96493E-06	7.96493E-06	0	0	1.08021E-10	6.52314E-10	7.60335E-10	0.0007603
3969253767739	396925	3767739	0	0	0	0	0	0	7.94294E-06	7.94294E-06	0	0	1.07723E-10	6.50513E-10	7.58235E-10	0.0007582
3969753767739	396975	3767739	0	0	0	0	0	0	7.89019E-06	7.89019E-06	0	0	1.07007E-10	6.46193E-10	7.53201E-10	0.0007532
3970253767739	397025	3767739	0	0	0	0	0	0	7.85697E-06	7.85697E-06	0	0	1.06557E-10	6.43472E-10	7.50029E-10	0.00075
3970753767739	397075	3767739	0	0	0	0	0	0	7.89709E-06	7.89709E-06	0	0	1.07101E-10	6.46758E-10	7.53859E-10	0.0007539
3971253767739	397125	3767739	0	0	0	0	0	0	7.90673E-06	7.90673E-06	0	0	1.07232E-10	6.47548E-10	7.54779E-10	0.0007548
3971753767739	397175	3767739	0	0	0	0	0	0	7.80276E-06	7.80276E-06	0	0	1.05821E-10	6.39033E-10	7.44854E-10	0.0007449
3972253767739	397225	3767739	0	0	0	0	0	0	7.63719E-06	7.63719E-06	0	0	1.03576E-10	6.25473E-10	7.29048E-10	0.000729
3972753767739	397275	3767739	0	0	0	0	0	0	7.20278E-06	7.20278E-06	0	0	9.76845E-11	5.89895E-10	6.8758E-10	0.0006876
3973253767739	397325	3767739	0	0	0	0	0	0	7.20566E-06	7.20566E-06	0	0	9.77236E-11	5.90131E-10	6.87855E-10	0.0006879
3973753767739	397375	3767739	0	0	0	0	0	0	7.18178E-06	7.18178E-06	0	0	9.73997E-11	5.88175E-10	6.85575E-10	0.0006856
3974253767739	397425	3767739	0	0	0	0	0	0	6.98887E-06	6.98887E-06	0	0	9.47834E-11	5.72376E-10	6.6716E-10	0.0006672
3974753767739	397475	3767739	0	0	0	0	0	0	6.17468E-06	6.17468E-06	0	0	8.37413E-11	5.05695E-10	5.89437E-10	0.0005894
3975253767739	397525	3767739	0	0	0	0	0	0	5.96908E-06	5.96908E-06	0	0	8.0953E-11	4.88857E-10	5.6981E-10	0.0005698
3964253767789	396425	3767789	0	0	0	0	0	0	7.6955E-06	7.6955E-06	0	0	1.04367E-10	6.30248E-10	7.34615E-10	0.0007346
3964753767789	396475	3767789	0	0	0	0	0	0	7.41389E-06	7.41389E-06	0	0	1.00548E-10	6.07185E-10	7.07733E-10	0.0007077
3965253767789	396525	3767789	0	0	0	0	0	0	7.02164E-06	7.02164E-06	0	0	9.52279E-11	5.75061E-10	6.70288E-10	0.0006703
3965753767789	396575	3767789	0	0	0	0	0	0	7.10663E-06	7.10663E-06	0	0	9.63805E-11	5.82021E-10	6.78401E-10	0.0006784
3966253767789	396625	3767789	0	0	0	0	0	0	7.29373E-06	7.29373E-06	0	0	9.8918E-11	5.97344E-10	6.96262E-10	0.0006963

Garvey Reservoir Rehab - Unmitigated I/O Tower			Demolition - 2025	Demolition - 2026	Site Preparation - 2025	ite Preparation - 202	Grading - 2025	Grading - 2026	Infrastructure - 2025	nfrastructure - 2026	Paving - 2025	rchitectural Coating - 202	Child Risk			
Unique Identifier	X (UTM)	Y (UTM)	1900	1900	1900	1900	1900	1900	2025	2026	1900	1900	3rd Trimester	0<2	Total	per million
3966753767789	396675	3767789	0	0	0	0	0	0	7.51273E-06	7.51273E-06	0	0	1.01888E-10	6.1528E-10	7.17168E-10	0.0007172
3967253767789	396725	3767789	0	0	0	0	0	0	8.10376E-06	8.10376E-06	0	0	1.09904E-10	6.63684E-10	7.73588E-10	0.0007736
3967753767789	396775	3767789	0	0	0	0	0	0	8.30081E-06	8.30081E-06	0	0	1.12576E-10	6.79822E-10	7.92398E-10	0.0007924
3968253767789	396825	3767789	0	0	0	0	0	0	8.67271E-06	8.67271E-06	0	0	1.1762E-10	7.1028E-10	8.279E-10	0.0008279
3968753767789	396875	3767789	0	0	0	0	0	0	8.79661E-06	8.79661E-06	0	0	1.193E-10	7.20427E-10	8.39728E-10	0.0008397
3969253767789	396925	3767789	0	0	0	0	0	0	8.79264E-06	8.79264E-06	0	0	1.19246E-10	7.20102E-10	8.39348E-10	0.0008393
3969753767789	396975	3767789	0	0	0	0	0	0	8.68443E-06	8.68443E-06	0	0	1.17779E-10	7.1124E-10	8.29019E-10	0.000829
3970253767789	397025	3767789	0	0	0	0	0	0	8.63588E-06	8.63588E-06	0	0	1.1712E-10	7.07264E-10	8.24384E-10	0.0008244
3970753767789	397075	3767789	0	0	0	0	0	0	8.71677E-06	8.71677E-06	0	0	1.18217E-10	7.13888E-10	8.32106E-10	0.0008321
3971253767789	397125	3767789	0	0	0	0	0	0	8.77979E-06	8.77979E-06	0	0	1.19072E-10	7.1905E-10	8.38122E-10	0.0008381
3971753767789	397175	3767789	0	0	0	0	0	0	8.74035E-06	8.74035E-06	0	0	1.18537E-10	7.1582E-10	8.34357E-10	0.0008344
3972253767789	397225	3767789	0	0	0	0	0	0	8.63093E-06	8.63093E-06	0	0	1.17053E-10	7.06858E-10	8.23912E-10	0.0008239
3972753767789	397275	3767789	0	0	0	0	0	0	8.15315E-06	8.15315E-06	0	0	1.10573E-10	6.67729E-10	7.78302E-10	0.0007783
3973253767789	397325	3767789	0	0	0	0	0	0	7.95506E-06	7.95506E-06	0	0	1.07887E-10	6.51506E-10	7.59393E-10	0.0007594
3973753767789	397375	3767789	0	0	0	0	0	0	7.98046E-06	7.98046E-06	0	0	1.08231E-10	6.53586E-10	7.61818E-10	0.0007618
3974253767789	397425	3767789	0	0	0	0	0	0	7.81708E-06	7.81708E-06	0	0	1.06016E-10	6.40205E-10	7.46221E-10	0.0007462
3974753767789	397475	3767789	0	0	0	0	0	0	6.81191E-06	6.81191E-06	0	0	9.23836E-11	5.57884E-10	6.50268E-10	0.0006503
3975253767789	397525	3767789	0	0	0	0	0	0	6.60683E-06	6.60683E-06	0	0	8.96022E-11	5.41088E-10	6.3069E-10	0.0006307
3964253767839	396425	3767839	0	0	0	0	0	0	8.21604E-06	8.21604E-06	0	0	1.11426E-10	6.7288E-10	7.84306E-10	0.0007843
3964753767839	396475	3767839	0	0	0	0	0	0	8.16376E-06	8.16376E-06	0	0	1.10717E-10	6.68598E-10	7.79316E-10	0.0007793
3965253767839	396525	3767839	0	0	0	0	0	0	7.40369E-06	7.40369E-06	0	0	1.00409E-10	6.0635E-10	7.06759E-10	0.0007068
3965753767839	396575	3767839	0	0	0	0	0	0	7.61628E-06	7.61628E-06	0	0	1.03292E-10	6.2376E-10	7.27053E-10	0.0007271
3966253767839	396625	3767839	0	0	0	0	0	0	7.84574E-06	7.84574E-06	0	0	1.06404E-10	6.42553E-10	7.48957E-10	0.000749
3966753767839	396675	3767839	0	0	0	0	0	0	8.75109E-06	8.75109E-06	0	0	1.18683E-10	7.16699E-10	8.35382E-10	0.0008354
3967253767839	396725	3767839	0	0	0	0	0	0	9.16746E-06	9.16746E-06	0	0	1.2433E-10	7.50799E-10	8.75129E-10	0.0008751
3967753767839	396775	3767839	0	0	0	0	0	0	9.40771E-06	9.40771E-06	0	0	1.27588E-10	7.70475E-10	8.98063E-10	0.0008981
3968253767839	396825	3767839	0	0	0	0	0	0	9.64221E-06	9.64221E-06	0	0	1.30768E-10	7.89681E-10	9.20449E-10	0.0009204
3968753767839	396875	3767839	0	0	0	0	0	0	9.75542E-06	9.75542E-06	0	0	1.32304E-10	7.98952E-10	9.31256E-10	0.0009313
3969253767839	396925	3767839	0	0	0	0	0	0	9.78484E-06	9.78484E-06	0	0	1.32703E-10	8.01361E-10	9.34064E-10	0.0009341
3969753767839	396975	3767839	0	0	0	0	0	0	9.68405E-06	9.68405E-06	0	0	1.31336E-10	7.93107E-10	9.24442E-10	0.0009244
3970253767839	397025	3767839	0	0	0	0	0	0	9.60676E-06	9.60676E-06	0	0	1.30287E-10	7.86777E-10	9.17064E-10	0.0009171
3970753767839	397075	3767839	0	0	0	0	0	0	9.81404E-06	9.81404E-06	0	0	1.33099E-10	8.03753E-10	9.36852E-10	0.0009369
3971253767839	397125	3767839	0	0	0	0	0	0	9.99446E-06	9.99446E-06	0	0	1.35545E-10	8.18529E-10	9.54075E-10	0.0009541
3971753767839	397175	3767839	0	0	0	0	0	0	9.86235E-06	9.86235E-06	0	0	1.33754E-10	8.0771E-10	9.41463E-10	0.0009415
3972253767839	397225	3767839	0	0	0	0	0	0	9.48179E-06	9.48179E-06	0	0	1.28593E-10	7.76543E-10	9.05135E-10	0.0009051
3972753767839	397275	3767839	0	0	0	0	0	0	8.98205E-06	8.98205E-06	0	0	1.21815E-10	7.35614E-10	8.57429E-10	0.0008574
3973253767839	397325	3767839	0	0	0	0	0	0	8.56318E-06	8.56318E-06	0	0	1.16134E-10	7.0131E-10	8.17444E-10	0.0008174
3973753767839	397375	3767839	0	0	0	0	0	0	8.90805E-06	8.90805E-06	0	0	1.20812E-10	7.29554E-10	8.50366E-10	0.0008504
3974753767839	397475	3767839	0	0	0	0	0	0	8.39684E-06	8.39684E-06	0	0	1.13878E-10	6.87687E-10	8.01565E-10	0.0008016
3975253767839	397525	3767839	0	0	0	0	0	0	7.17645E-06	7.17645E-06	0	0	9.73275E-11	5.87739E-10	6.85067E-10	0.0006851
3964253767889	396425	3767889	0	0	0	0	0	0	8.68786E-06	8.68786E-06	0	0	1.17825E-10	7.11521E-10	8.29346E-10	0.0008293
3964753767889	396475	3767889	0	0	0	0	0	0	7.72394E-06	7.72394E-06	0	0	1.04753E-10	6.32578E-10	7.3733E-10	0.0007373
3965253767889	396525	3767889	0	0	0	0	0	0	7.92693E-06	7.92693E-06	0	0	1.07506E-10	6.49202E-10	7.56708E-10	0.0007567
3965753767889	396575	3767889	0	0	0	0	0	0	8.28594E-06	8.28594E-06	0	0	1.12374E-10	6.78604E-10	7.90978E-10	0.000791
3974753767889	397475	3767889	0	0	0	0	0	0	9.11005E-06	9.11005E-06	0	0	1.23551E-10	7.46098E-10	8.69649E-10	0.0008696
3975253767889	397525	3767889	0	0	0	0	0	0	7.91657E-06	7.91657E-06	0	0	1.07365E-10	6.48353E-10	7.55718E-10	0.0007557
3964253767939	396425	3767939	0	0	0	0	0	0	9.223E-06	9.223E-06	0	0	1.25083E-10	7.55348E-10	8.80431E-10	0.0008804
3964753767939	396475	3767939	0	0	0	0	0	0	8.29009E-06	8.29009E-06	0	0	1.12431E-10	6.78944E-10	7.91375E-10	0.0007914
3965253767939	396525	3767939	0	0	0	0	0	0	8.58704E-06	8.58704E-06	0	0	1.16458E-10	7.03264E-10	8.19722E-10	0.0008197
3974753767939	397475	3767939	0	0	0	0	0	0	9.67969E-06	9.67969E-06	0	0	1.31276E-10	7.9275E-10	9.24026E-10	0.000924
3975253767939	397525	3767939	0	0	0	0	0	0	8.84858E-06	8.84858E-06	0	0	1.20005E-10	7.24683E-10	8.44688E-10	0.0008447
3964253767989	396425	3767989	0	0	0	0	0	0	9.04835E-06	9.04835E-06	0	0	1.22714E-10	7.41045E-10	8.63759E-10	0.0008638
3964753767989	396475	3767989	0	0	0	0	0	0	9.00918E-06	9.00918E-06	0	0	1.22183E-10	7.37837E-10	8.6002E-10	0.00086
3974753767989	397475	3767989	0	0	0	0	0	0	1.11242E-05	1.11242E-05	0	0	1.50867E-10	9.11053E-10	1.06192E-09	0.0010619
3975253767989	397525	3767989	0	0	0	0	0	0	1.00822E-05	1.00822E-05	0	0	1.36735E-10	8.25715E-10	9.62451E-10	0.0009625
3964253768039	396425	3768039	0	0	0	0	0	0	9.75461E-06	9.75461E-06	0	0	1.32293E-10	7.98886E-10	9.31179E-10	0.0009312
3964753768039	396475	3768039	0	0	0	0	0	0	1.00792E-05	1.00792E-05	0	0	1.36695E-10	8.2547E-10	9.62165E-10	0.0009622
3974753768039	397475	3768039	0	0	0	0	0	0	1.48514E-05	1.48514E-05	0	0	2.01416E-10	1.21631E-09	1.41772E-09	0.0014177
3975253768039	397525	3768039	0	0	0	0	0	0	1.38974E-05	1.38974E-05	0	0	1.88477E-10	1.13817E-09	1.32665E-09	0.0013267
3964253768089	396425	3768089	0	0	0	0	0	0	1.07571E-05	1.07571E-05	0	0	1.45888E-10	8.80985E-10	1.02687E-09	0.0010269
3964753768089	396475	3768089	0	0	0	0	0	0	1.13061E-05	1.13061E-05	0	0	1.53334E-10	9.25953E-10	1.07929E-09	0.0010793
3974753768089	397475	3768089	0	0	0	0	0	0	1.99899E-05	1.99899E-05	0	0	2.71104E-10	1.63714E-09	1.90824E-09	0.0019082
3975253768089	397525	3768089	0	0	0	0	0	0	1.841E-05	1.841E-05	0	0	2.49678E-10	1.50775E-09	1.75743E-09	0.0017574
3964253768139	396425	3768139	0	0	0	0	0	0	1.33947E-05	1.33947E-05	0	0	1.8166E-10	1.097E-09	1.27866E-09	0.0012787
3964753768139	396475	3768139	0	0	0	0	0	0	1.23382E-05	1.23382E-05	0	0	1.67331E-10	1.01048E-09	1.17781E-09	0.0011778
3974253768139	397425	3768139	0	0	0	0	0	0	4.24084E-05	4.24084E-05	0	0	5.75145E-10	3.47318E-09	4.04832E-09	0.0040483
3974753768139	397475	3768139	0	0	0	0	0	0	3.07235E-05	3.07235E-05	0	0	4.16674E-10	2.5162E-09	2.93288E-09	0.0029329
3975253768139	397525	3768139	0	0	0	0	0	0	2.31816E-05	2.31816E-05	0	0	3.1439E-10	1.89853E-09	2.21292E-09	0.0022129
3964253768189	396425	3768189	0	0	0	0	0	0	1.44308E-05	1.44308E-05	0	0	1.95712E-10	1.18186E-09	1.37757E-09	0.0013776
3964753768189	396475	3768189	0	0	0	0	0	0	1.35066E-05	1.35066E-05	0	0	1.83177E-10	1.10617E-09	1.28934E-09	0.0012893
3973753768189	397375	3768189	0	0	0	0	0	0	0.000251374	0.000251374	0	0	3.40915E-09	2.05871E-08	2.39962E-08	0.0239962

Garvey Reservoir Rehab - Unmitigated I/O Tower			Demolition - 2025	Demolition - 2026	Site Preparation - 2025	ite Preparation - 202	Grading - 2025	Grading - 2026	Infrastructure - 2025	nfrastructure - 2026	Paving - 2025	rchitectural Coating - 202	Child Risk			
Unique Identifier	X (UTM)	Y (UTM)	1900	1900	1900	1900	1900	1900	2025	2026	1900	1900	3rd Trimester	0<2	Total	per million
3974253768189	397425	3768189	0	0	0	0	0	0	7.26092E-05	7.26092E-05	0	0	9.8473E-10	5.94657E-09	6.9313E-09	0.0069313
3974753768189	397475	3768189	0	0	0	0	0	0	4.16037E-05	4.16037E-05	0	0	5.64232E-10	3.40727E-09	3.97151E-09	0.0039715
3975253768189	397525	3768189	0	0	0	0	0	0	2.86451E-05	2.86451E-05	0	0	3.88487E-10	2.34599E-09	2.73447E-09	0.0027345
3964253768239	396425	3768239	0	0	0	0	0	0	1.56187E-05	1.56187E-05	0	0	2.11822E-10	1.27915E-09	1.49097E-09	0.001491
3964753768239	396475	3768239	0	0	0	0	0	0	1.49348E-05	1.49348E-05	0	0	2.02547E-10	1.22314E-09	1.42569E-09	0.0014257
3973753768239	397375	3768239	0	0	0	0	0	0	0.000366194	0.000366194	0	0	4.96635E-09	2.99907E-08	3.4957E-08	0.034957
3974253768239	397425	3768239	0	0	0	0	0	0	9.31217E-05	9.31217E-05	0	0	1.26292E-09	7.62651E-09	8.88943E-09	0.0088894
3974753768239	397475	3768239	0	0	0	0	0	0	5.02084E-05	5.02084E-05	0	0	6.80929E-10	4.11198E-09	4.79291E-09	0.0047929
3975253768239	397525	3768239	0	0	0	0	0	0	3.40586E-05	3.40586E-05	0	0	4.61904E-10	2.78934E-09	3.25124E-09	0.0032512
3964253768289	396425	3768289	0	0	0	0	0	0	1.67187E-05	1.67187E-05	0	0	2.2674E-10	1.36923E-09	1.59597E-09	0.001596
3964753768289	396475	3768289	0	0	0	0	0	0	1.66394E-05	1.66394E-05	0	0	2.25665E-10	1.36274E-09	1.58841E-09	0.0015884
3973253768289	397325	3768289	0	0	0	0	0	0	0.000970128	0.000970128	0	0	1.31569E-08	7.94518E-08	9.26087E-08	0.0926087
3973753768289	397375	3768289	0	0	0	0	0	0	0.000256808	0.000256808	0	0	3.48284E-09	2.10321E-08	2.4515E-08	0.024515
3974253768289	397425	3768289	0	0	0	0	0	0	0.000113184	0.000113184	0	0	1.53501E-09	9.26956E-09	1.08046E-08	0.0108046
3974753768289	397475	3768289	0	0	0	0	0	0	6.23968E-05	6.23968E-05	0	0	8.46228E-10	5.11019E-09	5.95642E-09	0.0059564
3975253768289	397525	3768289	0	0	0	0	0	0	4.04861E-05	4.04861E-05	0	0	5.49075E-10	3.31574E-09	3.86482E-09	0.0038648
3964253768339	396425	3768339	0	0	0	0	0	0	1.89441E-05	1.89441E-05	0	0	2.56921E-10	1.55149E-09	1.80841E-09	0.0018084
3964753768339	396475	3768339	0	0	0	0	0	0	1.88028E-05	1.88028E-05	0	0	2.55004E-10	1.53992E-09	1.79492E-09	0.0017949
3965253768339	396525	3768339	0	0	0	0	0	0	2.00438E-05	2.00438E-05	0	0	2.71835E-10	1.64155E-09	1.91339E-09	0.0019134
3972753768339	397275	3768339	0	0	0	0	0	0	0.000788164	0.000788164	0	0	1.06891E-08	6.45493E-08	7.52384E-08	0.0752384
3973253768339	397325	3768339	0	0	0	0	0	0	0.000581036	0.000581036	0	0	7.88004E-09	4.75859E-08	5.54659E-08	0.0554659
3973753768339	397375	3768339	0	0	0	0	0	0	0.00021402	0.00021402	0	0	2.90256E-09	1.75279E-08	2.04305E-08	0.0204305
3974253768339	397425	3768339	0	0	0	0	0	0	0.000112533	0.000112533	0	0	1.52618E-09	9.21628E-09	1.07425E-08	0.0107425
3974753768339	397475	3768339	0	0	0	0	0	0	6.76729E-05	6.76729E-05	0	0	9.17783E-10	5.54229E-09	6.46008E-09	0.0064601
3975253768339	397525	3768339	0	0	0	0	0	0	4.496E-05	4.496E-05	0	0	6.0975E-10	3.68215E-09	4.2919E-09	0.0042919
3964253768389	396425	3768389	0	0	0	0	0	0	2.10518E-05	2.10518E-05	0	0	2.85505E-10	1.7241E-09	2.00961E-09	0.0020096
3964753768389	396475	3768389	0	0	0	0	0	0	2.14284E-05	2.14284E-05	0	0	2.90614E-10	1.75495E-09	2.04557E-09	0.0020456
3965253768389	396525	3768389	0	0	0	0	0	0	2.24599E-05	2.24599E-05	0	0	3.04602E-10	1.83942E-09	2.14403E-09	0.002144
3972253768389	397225	3768389	0	0	0	0	0	0	0.000189473	0.000189473	0	0	2.56964E-09	1.55175E-08	1.80872E-08	0.0180872
3972753768389	397275	3768389	0	0	0	0	0	0	0.000750467	0.000750467	0	0	1.01779E-08	6.1462E-08	7.16398E-08	0.0716398
3973253768389	397325	3768389	0	0	0	0	0	0	0.00058123	0.00058123	0	0	7.88267E-09	4.76017E-08	5.54844E-08	0.0554844
3973753768389	397375	3768389	0	0	0	0	0	0	0.000206027	0.000206027	0	0	2.79415E-09	1.68733E-08	1.96674E-08	0.0196674
3974253768389	397425	3768389	0	0	0	0	0	0	0.000112723	0.000112723	0	0	1.52876E-09	9.23186E-09	1.07606E-08	0.0107606
3974753768389	397475	3768389	0	0	0	0	0	0	7.12803E-05	7.12803E-05	0	0	9.66707E-10	5.83773E-09	6.80444E-09	0.0068044
3975253768389	397525	3768389	0	0	0	0	0	0	4.89604E-05	4.89604E-05	0	0	6.64004E-10	4.00977E-09	4.67378E-09	0.0046738
3964253768439	396425	3768439	0	0	0	0	0	0	2.38928E-05	2.38928E-05	0	0	3.24035E-10	1.95678E-09	2.28081E-09	0.0022808
3964753768439	396475	3768439	0	0	0	0	0	0	2.46051E-05	2.46051E-05	0	0	3.33695E-10	2.01511E-09	2.34881E-09	0.0023488
3965253768439	396525	3768439	0	0	0	0	0	0	2.54921E-05	2.54921E-05	0	0	3.45725E-10	2.08776E-09	2.43348E-09	0.0024335
3971753768439	397175	3768439	0	0	0	0	0	0	0.000102075	0.000102075	0	0	1.38435E-09	8.3598E-09	9.74416E-09	0.0097442
3972253768439	397225	3768439	0	0	0	0	0	0	0.000198768	0.000198768	0	0	2.69571E-09	1.62788E-08	1.89745E-08	0.0189745
3972753768439	397275	3768439	0	0	0	0	0	0	0.000754179	0.000754179	0	0	1.02282E-08	6.1766E-08	7.19942E-08	0.0719942
3973253768439	397325	3768439	0	0	0	0	0	0	0.000567481	0.000567481	0	0	7.69621E-09	4.64757E-08	5.41719E-08	0.0541719
3973753768439	397375	3768439	0	0	0	0	0	0	0.000190445	0.000190445	0	0	2.58282E-09	1.55971E-08	1.81799E-08	0.0181799
3974253768439	397425	3768439	0	0	0	0	0	0	0.000104214	0.000104214	0	0	1.41335E-09	8.53493E-09	9.94828E-09	0.0099483
3974753768439	397475	3768439	0	0	0	0	0	0	7.37959E-05	7.37959E-05	0	0	1.00082E-09	6.04376E-09	7.04458E-09	0.0070446
3975253768439	397525	3768439	0	0	0	0	0	0	5.18253E-05	5.18253E-05	0	0	7.02858E-10	4.24441E-09	4.94727E-09	0.0049473
3964253768489	396425	3768489	0	0	0	0	0	0	2.72532E-05	2.72532E-05	0	0	3.6961E-10	2.23199E-09	2.6016E-09	0.0026016
3964753768489	396475	3768489	0	0	0	0	0	0	2.8417E-05	2.8417E-05	0	0	3.85394E-10	2.32731E-09	2.7127E-09	0.0027127
3965253768489	396525	3768489	0	0	0	0	0	0	2.95221E-05	2.95221E-05	0	0	4.00381E-10	2.41781E-09	2.81819E-09	0.0028182
3970753768489	397075	3768489	0	0	0	0	0	0	5.81399E-05	5.81399E-05	0	0	7.88496E-10	4.76156E-09	5.55005E-09	0.0055501
3971253768489	397125	3768489	0	0	0	0	0	0	7.3862E-05	7.3862E-05	0	0	1.00172E-09	6.04918E-09	7.0509E-09	0.0070509
3971753768489	397175	3768489	0	0	0	0	0	0	0.000106825	0.000106825	0	0	1.44876E-09	8.74875E-09	1.01975E-08	0.0101975
3972253768489	397225	3768489	0	0	0	0	0	0	0.000197614	0.000197614	0	0	2.68005E-09	1.61842E-08	1.88643E-08	0.0188643
3972753768489	397275	3768489	0	0	0	0	0	0	0.000740434	0.000740434	0	0	1.00418E-08	6.06403E-08	7.06821E-08	0.0706821
3973253768489	397325	3768489	0	0	0	0	0	0	0.000489762	0.000489762	0	0	6.64218E-09	4.01107E-08	4.67529E-08	0.0467529
3973753768489	397375	3768489	0	0	0	0	0	0	0.000187596	0.000187596	0	0	2.54418E-09	1.53638E-08	1.7908E-08	0.017908
3974253768489	397425	3768489	0	0	0	0	0	0	0.000103543	0.000103543	0	0	1.40426E-09	8.48003E-09	9.88429E-09	0.0098843
3974753768489	397475	3768489	0	0	0	0	0	0	6.45349E-05	6.45349E-05	0	0	8.75226E-10	5.2853E-09	6.16052E-09	0.0061605
3975253768489	397525	3768489	0	0	0	0	0	0	4.67519E-05	4.67519E-05	0	0	6.34052E-10	3.8289E-09	4.46296E-09	0.004463
3964253768539	396425	3768539	0	0	0	0	0	0	3.16938E-05	3.16938E-05	0	0	4.29834E-10	2.59567E-09	3.0255E-09	0.0030255
3964753768539	396475	3768539	0	0	0	0	0	0	3.34216E-05	3.34216E-05	0	0	4.53266E-10	2.73717E-09	3.19044E-09	0.0031904
3965253768539	396525	3768539	0	0	0	0	0	0	3.45357E-05	3.45357E-05	0	0	4.68375E-10	2.82841E-09	3.29679E-09	0.0032968
3965753768539	396575	3768539	0	0	0	0	0	0	3.32369E-05	3.32369E-05	0	0	4.50761E-10	2.72205E-09	3.17281E-09	0.0031728
3970253768539	397025	3768539	0	0	0	0	0	0	5.49967E-05	5.49967E-05	0	0	7.45868E-10	4.50413E-09	5.25E-09	0.00525
3970753768539	397075	3768539	0	0	0	0	0	0	6.43527E-05	6.43527E-05	0	0	8.72754E-10	5.27037E-09	6.14313E-09	0.0061431
3971253768539	397125	3768539	0	0	0	0	0	0	8.08591E-05	8.08591E-05	0	0	1.09662E-09	6.62222E-09	7.71883E-09	0.0077188
3971753768539	397175	3768539	0	0	0	0	0	0	0.000115452	0.000115452	0	0	1.56577E-09	9.45532E-09	1.10211E-08	0.0110211
3972253768539	397225	3768539	0	0	0	0	0	0	0.000202489	0.000202489	0	0	2.74617E-09	1.65835E-08	1.93297E-08	0.0193297
3972753768539	397275	3768539	0	0	0	0	0	0	0.000674464	0.000674464	0	0	9.14712E-09	5.52374E-08	6.43846E-08	0.0643846
3973253768539	397325	3768539	0	0	0	0	0	0	0.000472319	0.000472319	0	0	6.40562E-09	3.86821E-08	4.50877E-08	0.0450877
3973753768539	397375	3768539	0	0	0	0	0	0	0.000188947	0.000188947	0	0	2.56251E-09	1.54744E-08	1.80369E-08	0.0180369

Garvey Reservoir Rehab - Unmitigated I/O Tower			Demolition - 2025	Demolition - 2026	Site Preparation - 2025	ite Preparation - 202	Grading - 2025	Grading - 2026	Infrastructure - 2025	nfrastructure - 2026	Paving - 2025	rchitectural Coating - 202	Child Risk			
Unique Identifier	X (UTM)	Y (UTM)	1900	1900	1900	1900	1900	1900	2025	2026	1900	1900	3rd Trimester	0<2	Total	per million
3974253768539	397425	3768539	0	0	0	0	0	0	0.000101197	0.000101197	0	0	1.37244E-09	8.28788E-09	9.66032E-09	0.0096603
3974753768539	397475	3768539	0	0	0	0	0	0	6.5278E-05	6.5278E-05	0	0	8.85304E-10	5.34616E-09	6.23146E-09	0.0062315
3975253768539	397525	3768539	0	0	0	0	0	0	4.64848E-05	4.64848E-05	0	0	6.3043E-10	3.80703E-09	4.43746E-09	0.0044375
3964253768589	396425	3768589	0	0	0	0	0	0	3.69868E-05	3.69868E-05	0	0	5.01617E-10	3.02916E-09	3.53077E-09	0.0035308
3964753768589	396475	3768589	0	0	0	0	0	0	4.01359E-05	4.01359E-05	0	0	5.44325E-10	3.28706E-09	3.83138E-09	0.0038314
3965253768589	396525	3768589	0	0	0	0	0	0	3.99925E-05	3.99925E-05	0	0	5.42381E-10	3.27532E-09	3.8177E-09	0.0038177
3965753768589	396575	3768589	0	0	0	0	0	0	3.85848E-05	3.85848E-05	0	0	5.23289E-10	3.16003E-09	3.68332E-09	0.0036833
3966253768589	396625	3768589	0	0	0	0	0	0	3.8145E-05	3.8145E-05	0	0	5.17324E-10	3.12401E-09	3.64133E-09	0.0036413
3968253768589	396825	3768589	0	0	0	0	0	0	4.69972E-05	4.69972E-05	0	0	6.37379E-10	3.84899E-09	4.48637E-09	0.0044864
3968753768589	396875	3768589	0	0	0	0	0	0	4.98163E-05	4.98163E-05	0	0	6.75611E-10	4.07987E-09	4.75548E-09	0.0047555
3969253768589	396925	3768589	0	0	0	0	0	0	5.41098E-05	5.41098E-05	0	0	7.3384E-10	4.4315E-09	5.16534E-09	0.0051653
3969753768589	396975	3768589	0	0	0	0	0	0	5.80856E-05	5.80856E-05	0	0	7.87761E-10	4.75711E-09	5.54487E-09	0.0055449
3970253768589	397025	3768589	0	0	0	0	0	0	6.38991E-05	6.38991E-05	0	0	8.66603E-10	5.23323E-09	6.09983E-09	0.0060998
3970753768589	397075	3768589	0	0	0	0	0	0	7.2588E-05	7.2588E-05	0	0	9.84443E-10	5.94483E-09	6.92928E-09	0.0069293
3971253768589	397125	3768589	0	0	0	0	0	0	9.11865E-05	9.11865E-05	0	0	1.23668E-09	7.46802E-09	8.70469E-09	0.0087047
3971753768589	397175	3768589	0	0	0	0	0	0	0.000129253	0.000129253	0	0	1.75293E-09	1.05856E-08	1.23385E-08	0.0123385
3972253768589	397225	3768589	0	0	0	0	0	0	0.000226062	0.000226062	0	0	3.06586E-09	1.85141E-08	2.15799E-08	0.0215799
3972753768589	397275	3768589	0	0	0	0	0	0	0.000720408	0.000720408	0	0	9.77022E-09	5.90002E-08	6.87704E-08	0.0687704
3973253768589	397325	3768589	0	0	0	0	0	0	0.000469065	0.000469065	0	0	6.36149E-09	3.84157E-08	4.47772E-08	0.0447772
3973753768589	397375	3768589	0	0	0	0	0	0	0.000188904	0.000188904	0	0	2.56192E-09	1.54709E-08	1.80328E-08	0.0180328
3974253768589	397425	3768589	0	0	0	0	0	0	9.82419E-05	9.82419E-05	0	0	1.33236E-09	8.04585E-09	9.37821E-09	0.0093782
3974753768589	397475	3768589	0	0	0	0	0	0	6.48067E-05	6.48067E-05	0	0	8.78913E-10	5.30756E-09	6.18647E-09	0.0061865
3975253768589	397525	3768589	0	0	0	0	0	0	4.6876E-05	4.6876E-05	0	0	6.35735E-10	3.83907E-09	4.4748E-09	0.0044748
3964253768639	396425	3768639	0	0	0	0	0	0	4.45817E-05	4.45817E-05	0	0	6.0462E-10	3.65117E-09	4.25579E-09	0.0042558
3964753768639	396475	3768639	0	0	0	0	0	0	5.04824E-05	5.04824E-05	0	0	6.84646E-10	4.13443E-09	4.81907E-09	0.0048191
3965253768639	396525	3768639	0	0	0	0	0	0	4.74389E-05	4.74389E-05	0	0	6.43369E-10	3.88517E-09	4.52854E-09	0.0045285
3965753768639	396575	3768639	0	0	0	0	0	0	4.7726E-05	4.7726E-05	0	0	6.47263E-10	3.90868E-09	4.55594E-09	0.0045559
3966253768639	396625	3768639	0	0	0	0	0	0	4.8578E-05	4.8578E-05	0	0	6.58818E-10	3.97846E-09	4.63728E-09	0.0046373
3966753768639	396675	3768639	0	0	0	0	0	0	4.95918E-05	4.95918E-05	0	0	6.72566E-10	4.06148E-09	4.73405E-09	0.004734
3967253768639	396725	3768639	0	0	0	0	0	0	5.11221E-05	5.11221E-05	0	0	6.93321E-10	4.18682E-09	4.88014E-09	0.0048801
3967753768639	396775	3768639	0	0	0	0	0	0	5.38951E-05	5.38951E-05	0	0	7.30928E-10	4.41391E-09	5.14484E-09	0.0051448
3968253768639	396825	3768639	0	0	0	0	0	0	5.6558E-05	5.6558E-05	0	0	7.67043E-10	4.632E-09	5.39905E-09	0.005399
3968753768639	396875	3768639	0	0	0	0	0	0	6.06448E-05	6.06448E-05	0	0	8.22468E-10	4.96671E-09	5.78917E-09	0.0057892
3969253768639	396925	3768639	0	0	0	0	0	0	6.52452E-05	6.52452E-05	0	0	8.84859E-10	5.34347E-09	6.22833E-09	0.0062283
3969753768639	396975	3768639	0	0	0	0	0	0	6.93001E-05	6.93001E-05	0	0	9.39852E-10	5.67556E-09	6.61541E-09	0.0066154
3970253768639	397025	3768639	0	0	0	0	0	0	7.47681E-05	7.47681E-05	0	0	1.01401E-09	6.12338E-09	7.13739E-09	0.0071374
3970753768639	397075	3768639	0	0	0	0	0	0	8.29754E-05	8.29754E-05	0	0	1.12532E-09	6.79554E-09	7.92086E-09	0.0079209
3971253768639	397125	3768639	0	0	0	0	0	0	9.97722E-05	9.97722E-05	0	0	1.35312E-09	8.17118E-09	9.52429E-09	0.0095243
3971753768639	397175	3768639	0	0	0	0	0	0	0.000145964	0.000145964	0	0	1.97957E-09	1.19542E-08	1.39337E-08	0.0139337
3972253768639	397225	3768639	0	0	0	0	0	0	0.000287662	0.000287662	0	0	3.90129E-09	2.3559E-08	2.74603E-08	0.0274603
3972753768639	397275	3768639	0	0	0	0	0	0	0.001002035	0.001002035	0	0	1.35897E-08	8.20649E-08	9.56546E-08	0.0956546
3973253768639	397325	3768639	0	0	0	0	0	0	0.000422525	0.000422525	0	0	5.73031E-09	3.46041E-08	4.03344E-08	0.0403344
3973753768639	397375	3768639	0	0	0	0	0	0	0.000186159	0.000186159	0	0	2.5247E-09	1.52461E-08	1.77708E-08	0.0177708
3974253768639	397425	3768639	0	0	0	0	0	0	0.000108512	0.000108512	0	0	1.47165E-09	8.88696E-09	1.03586E-08	0.0103586
3974753768639	397475	3768639	0	0	0	0	0	0	6.44145E-05	6.44145E-05	0	0	8.73594E-10	5.27544E-09	6.14903E-09	0.006149
3975253768639	397525	3768639	0	0	0	0	0	0	4.7333E-05	4.7333E-05	0	0	6.41933E-10	3.87649E-09	4.51843E-09	0.0045184
3964253768689	396425	3768689	0	0	0	0	0	0	5.74646E-05	5.74646E-05	0	0	7.79339E-10	4.70626E-09	5.48559E-09	0.0054856
3964753768689	396475	3768689	0	0	0	0	0	0	6.81666E-05	6.81666E-05	0	0	9.2448E-10	5.58273E-09	6.50721E-09	0.0065072
3965253768689	396525	3768689	0	0	0	0	0	0	7.07517E-05	7.07517E-05	0	0	9.59539E-10	5.79444E-09	6.75398E-09	0.006754
3965753768689	396575	3768689	0	0	0	0	0	0	6.95382E-05	6.95382E-05	0	0	9.43081E-10	5.69506E-09	6.63814E-09	0.0066381
3966253768689	396625	3768689	0	0	0	0	0	0	7.03557E-05	7.03557E-05	0	0	9.54168E-10	5.76201E-09	6.71618E-09	0.0067162
3966753768689	396675	3768689	0	0	0	0	0	0	6.98859E-05	6.98859E-05	0	0	9.47796E-10	5.72353E-09	6.67133E-09	0.0066713
3967253768689	396725	3768689	0	0	0	0	0	0	7.10507E-05	7.10507E-05	0	0	9.63593E-10	5.81893E-09	6.78252E-09	0.0067825
3967753768689	396775	3768689	0	0	0	0	0	0	7.20714E-05	7.20714E-05	0	0	9.77436E-10	5.90252E-09	6.87996E-09	0.00688
3968253768689	396825	3768689	0	0	0	0	0	0	7.59723E-05	7.59723E-05	0	0	1.03034E-09	6.222E-09	7.25234E-09	0.0072523
3968753768689	396875	3768689	0	0	0	0	0	0	8.00195E-05	8.00195E-05	0	0	1.08523E-09	6.55346E-09	7.63869E-09	0.0076387
3969253768689	396925	3768689	0	0	0	0	0	0	8.34748E-05	8.34748E-05	0	0	1.13209E-09	6.83644E-09	7.96853E-09	0.0079685
3969753768689	396975	3768689	0	0	0	0	0	0	8.70377E-05	8.70377E-05	0	0	1.18041E-09	7.12824E-09	8.30865E-09	0.0083086
3970253768689	397025	3768689	0	0	0	0	0	0	9.20079E-05	9.20079E-05	0	0	1.24782E-09	7.53529E-09	8.78311E-09	0.0087831
3970753768689	397075	3768689	0	0	0	0	0	0	0.000100925	0.000100925	0	0	1.36875E-09	8.26556E-09	9.6343E-09	0.0096343
3971253768689	397125	3768689	0	0	0	0	0	0	0.000117858	0.000117858	0	0	1.5984E-09	9.65237E-09	1.12508E-08	0.0112508
3971753768689	397175	3768689	0	0	0	0	0	0	0.000164349	0.000164349	0	0	2.22891E-09	1.34599E-08	1.56888E-08	0.0156888
3972253768689	397225	3768689	0	0	0	0	0	0	0.000372703	0.000372703	0	0	5.05461E-09	3.05237E-08	3.55783E-08	0.0355783
3972753768689	397275	3768689	0	0	0	0	0	0	0.001023715	0.001023715	0	0	1.38837E-08	8.38405E-08	9.77242E-08	0.0977242
3973253768689	397325	3768689	0	0	0	0	0	0	0.000342623	0.000342623	0	0	4.64668E-09	2.80603E-08	3.2707E-08	0.032707
3973753768689	397375	3768689	0	0	0	0	0	0	0.000173454	0.000173454	0	0	2.35239E-09	1.42055E-08	1.65579E-08	0.0165579
3974253768689	397425	3768689	0	0	0	0	0	0	0.000108349	0.000108349	0	0	1.46943E-09	8.87357E-09	1.0343E-08	0.010343
3974753768689	397475	3768689	0	0	0	0	0	0	7.39421E-05	7.39421E-05	0	0	1.00281E-09	6.05573E-09	7.05853E-09	0.0070585
3975253768689	397525	3768689	0	0	0	0	0	0	5.3666E-05	5.3666E-05	0	0	7.27821E-10	4.39515E-09	5.12298E-09	0.005123

Garvey Reservoir Rehab - Unmitigated I/O Tower

Maximum Individual Non-Cancer Impact Calculations - Sensitive Receptors (Maximum Impacted Senior Residential Receptor) (IMPACT AT ALL OTHER LOCATIONS ON THE PROJECT SITE WOULD BE LESS THAN SHOWN)

Maximum Non-cancer Chronic Hazards / Toxicological Endpoints*

Receptor Group	Pollutant	CREL[1]	CONC	WFrac	$CONC_{WF}$	HI		ALIM	BN	CVS	DEV	ENDC	EYE	HEM	IMMUN	KIDN	NS	REPRO	RESP	SK
Project:																				
MEI - Max	DPM	5.00E+00	1.18E-01	1.00E+00	1.18E-01	0.024		-	-	-	-	-	-	-	-	-	-	-	2.36E-02	-
							Total Risk				-			-				-	0.024	
							Threshold				1.00			1.00				1.00	1.00	
							Over?				NO			NO				NO	NO	

Notes:

1. California Air Resources Board, "Consolidated Table of OEHHA/ARB Approved Risk Assessment Health Values," "OEHHA/ARB Approved Chronic Reference Exposure Levels and Target Organs," "OEHHA/ARB Approved Acute Reference Exposure Levels and Target Organs," and "OEHHA/ARB Approved 8-Hour Reference Exposure Levels and Target Organs," http://www.arb.ca.gov/toxics/healthval/healthval.htm. Tables last updated: May 8, 2018. Downloaded: 08/14/18.

Source: ESA, 2020

Where:

$CONC_{WF}$	Pollutant Concentration ($\mu g/m^3$) multiplied by the weight fraction
CREL	Chronic Reference Exposure Level
HI	Hazard Index
MEI	Maximally Exposed Individual
WFrac	Weight fraction of speciated component

* Key to Toxicological Endpoints

ALIM	Alimentary Tract	EYE	Eye	NS	Nervous System
BN	Bone	HEM	Hematologic System	REPRO	Reproductive System
CVS	Cardiovascular System	IMMUN	Immune System	RESP	Respiratory System
DEV	Developmental System	KIDN	Kidney	SK	Skin
ENDC	Endocrine System				

Chronic HI

Garvey Reservoir Rehab - Mitigated I/O Tower

Cancer Risk Summary & Maximum Annual GLC for Chronic Calculations

Cancer Risk Summary

Max Risk: 0.431645

XY	X	Y	Offroad Risk	Haul Risk	Total Risk
7449041451	574490	4145130	0.003144291	0.000365624	0.00351
7448041451	574480	4145140	0.003476257	0.000373913	0.00385
7449041451	574490	4145140	0.003974927	0.00038912	0.004364
7449041451	574490	4145150	0.004462051	0.000399258	0.004861
7450041451	574500	4145150	0.005041547	0.000437697	0.005479
7446041451	574460	4145160	0.005435576	0.000413818	0.005849
7449041451	574490	4145160	0.00568888	0.000412195	0.006101
7450041451	574500	4145160	0.005940741	0.000412556	0.006353
7451041451	574510	4145160	0.00630879	0.000418015	0.006727
7446041451	574460	4145170	0.006517351	0.000407473	0.006925
7447041451	574470	4145170	0.006466112	0.0004019	0.006868
7448041451	574480	4145170	0.006227241	0.000402385	0.00663
7449041451	574490	4145170	0.00613559	0.000384042	0.00652
7450041451	574500	4145170	0.005931359	0.000345737	0.006277
7451041451	574510	4145170	0.005512794	0.000340078	0.005853
7452041451	574520	4145170	0.005057424	0.000330096	0.005388
7446041451	574460	4145180	0.004472876	0.000340671	0.004814
7447041451	574470	4145180	0.004012454	0.000324491	0.004337
7448041451	574480	4145180	0.003374502	0.00042075	0.003795
7449041451	574490	4145180	0.003720901	0.000411118	0.004132
7450041451	574500	4145180	0.004355244	0.000433124	0.004788
7451041451	574510	4145180	0.00503	0.00047438	0.005504
7452041451	574520	4145180	0.005743726	0.000480826	0.006225
7453041451	574530	4145180	0.006389616	0.000466864	0.006856
7445041451	574450	4145190	0.006966226	0.000470516	0.007437
7446041451	574460	4145190	0.007475721	0.000473263	0.007949
7447041451	574470	4145190	0.008072537	0.000480309	0.008553
7448041451	574480	4145190	0.008457906	0.000471078	0.008929
7449041451	574490	4145190	0.008473061	0.000456242	0.008929
7450041451	574500	4145190	0.008167797	0.000457749	0.008626
7451041451	574510	4145190	0.00784377	0.000443979	0.008288
7452041451	574520	4145190	0.007500257	0.00040045	0.007901
7444041452	574440	4145200	0.006866636	0.00037977	0.007246
7445041452	574450	4145200	0.00613126	0.000371441	0.006503
7446041452	574460	4145200	0.005405266	0.000362619	0.005768
7447041452	574470	4145200	0.004744943	0.000348985	0.005094
7448041452	574480	4145200	0.003524609	0.000443525	0.003968
7449041452	574490	4145200	0.003984309	0.000455939	0.00444
7450041452	574500	4145200	0.004654013	0.000476851	0.005131
7451041452	574510	4145200	0.005517845	0.000506344	0.006024
7443041452	574430	4145210	0.006561372	0.000562461	0.007124
7444041452	574440	4145210	0.007710262	0.00057112	0.008281
7445041452	574450	4145210	0.008489659	0.00053855	0.009028
7446041452	574460	4145210	0.009685457	0.000552129	0.010238
7447041452	574470	4145210	0.010636611	0.00055968	0.011196
7448041452	574480	4145210	0.011299098	0.000559815	0.011859
7449041452	574490	4145210	0.011587042	0.000539159	0.012126
7450041452	574500	4145210	0.011223324	0.000532011	0.011755
7451041452	574510	4145210	0.010543516	0.000518752	0.011062
7443041452	574430	4145220	0.009888966	0.0004621	0.010351
7444041452	574440	4145220	0.008768222	0.000435873	0.009204
7445041452	574450	4145220	0.007608507	0.000412165	0.008021
7446041452	574460	4145220	0.006507247	0.000396497	0.006904
7447041452	574470	4145220	0.005561145	0.00037692	0.005938
7448041452	574480	4145220	0.003710076	0.000537011	0.004247
7449041452	574490	4145220	0.0042405	0.000508091	0.004749
7450041452	574500	4145220	0.00503433	0.000541417	0.005576
7451041452	574510	4145220	0.006106002	0.000640396	0.006746
7452041452	574520	4145220	0.007380461	0.000646205	0.008027
7453041452	574530	4145220	0.008671519	0.000605334	0.009277
7444041452	574440	4145230	0.010599806	0.000630171	0.01123
7445041452	574450	4145230	0.013006556	0.000665582	0.013672

Max GLC for Chronic Calcs

Max GLC: 0.004522

XY	X	Y	2025	2026	2027	2034	2035
57449041451	574490	4145130	3.677E-05	3.677E-05	0		
57448041451	574480	4145140	4.033E-05	4.033E-05	0		
57449041451	574490	4145140	4.572E-05	4.572E-05	0		
57449041451	574490	4145150	5.092E-05	5.092E-05	0		
57450041451	574500	4145150	5.74E-05	5.74E-05	0		
57446041451	574460	4145160	6.128E-05	6.128E-05	0		
57449041451	574490	4145160	6.391E-05	6.391E-05	0		
57450041451	574500	4145160	6.655E-05	6.655E-05	0		
57451041451	574510	4145160	7.047E-05	7.047E-05	0		
57446041451	574460	4145170	7.254E-05	7.254E-05	0		
57447041451	574470	4145170	7.195E-05	7.195E-05	0		
57448041451	574480	4145170	6.945E-05	6.945E-05	0		
57449041451	574490	4145170	6.83E-05	6.83E-05	0		
57450041451	574500	4145170	6.576E-05	6.576E-05	0		
57451041451	574510	4145170	6.131E-05	6.131E-05	0		
57452041451	574520	4145170	5.644E-05	5.644E-05	0		
57446041451	574460	4145180	5.042E-05	5.042E-05	0		
57447041451	574470	4145180	4.543E-05	4.543E-05	0		
57448041451	574480	4145180	3.976E-05	3.976E-05	0		
57449041451	574490	4145180	4.329E-05	4.329E-05	0		
57450041451	574500	4145180	5.016E-05	5.016E-05	0		
57451041451	574510	4145180	5.766E-05	5.766E-05	0		
57452041451	574520	4145180	6.521E-05	6.521E-05	0		
57453041451	574530	4145180	7.183E-05	7.183E-05	0		
57445041451	574450	4145190	7.79E-05	7.79E-05	0		
57446041451	574460	4145190	8.327E-05	8.327E-05	0		
57447041451	574470	4145190	8.96E-05	8.96E-05	0		
57448041451	574480	4145190	9.354E-05	9.354E-05	0		
57449041451	574490	4145190	9.354E-05	9.354E-05	0		
57450041451	574500	4145190	9.036E-05	9.036E-05	0		
57451041451	574510	4145190	8.682E-05	8.682E-05	0		
57452041451	574520	4145190	8.276E-05	8.276E-05	0		
57444041452	574440	4145200	7.591E-05	7.591E-05	0		
57445041452	574450	4145200	6.812E-05	6.812E-05	0		
57446041452	574460	4145200	6.042E-05	6.042E-05	0		
57447041452	574470	4145200	5.336E-05	5.336E-05	0		
57448041452	574480	4145200	4.157E-05	4.157E-05	0		
57449041452	574490	4145200	4.651E-05	4.651E-05	0		
57450041452	574500	4145200	5.375E-05	5.375E-05	0		
57451041452	574510	4145200	6.311E-05	6.311E-05	0		
57443041452	574430	4145210	7.463E-05	7.463E-05	0		
57444041452	574440	4145210	8.675E-05	8.675E-05	0		
57445041452	574450	4145210	9.458E-05	9.458E-05	0		
57446041452	574460	4145210	0.0001072	0.0001072	0		
57447041452	574470	4145210	0.0001173	0.0001173	0		
57448041452	574480	4145210	0.0001242	0.0001242	0		
57449041452	574490	4145210	0.000127	0.000127	0		
57450041452	574500	4145210	0.0001231	0.0001231	0		
57451041452	574510	4145210	0.0001159	0.0001159	0		
57443041452	574430	4145220	0.0001084	0.0001084	0		
57444041452	574440	4145220	9.642E-05	9.642E-05	0		
57445041452	574450	4145220	8.402E-05	8.402E-05	0		
57446041452	574460	4145220	7.232E-05	7.232E-05	0		
57447041452	574470	4145220	6.22E-05	6.22E-05	0		
57448041452	574480	4145220	4.449E-05	4.449E-05	0		
57449041452	574490	4145220	4.974E-05	4.974E-05	0		
57450041452	574500	4145220	5.841E-05	5.841E-05	0		
57451041452	574510	4145220	7.067E-05	7.067E-05	0		
57452041452	574520	4145220	8.408E-05	8.408E-05	0		
57453041452	574530	4145220	9.718E-05	9.718E-05	0		
57444041452	574440	4145230	0.0001176	0.0001176	0		
57445041452	574450	4145230	0.0001432	0.0001432	0		

Garvey Reservoir Rehab - Mitigated I/O Tower

Cancer Risk Summary & Maximum Annual GLC for Chronic Calculations

Cancer Risk Summary

Max Risk: 0.431645

XY	X	Y	Offroad Risk	Haul Risk	Total Risk
7446041452	574460	4145230	0.015274026	0.000672828	0.015947
7447041452	574470	4145230	0.016443843	0.000670803	0.017115
7448041452	574480	4145230	0.016925915	0.000655964	0.017582
7449041452	574490	4145230	0.016875399	0.000601551	0.017477
7450041452	574500	4145230	0.015203302	0.000611904	0.015815
7451041452	574510	4145230	0.013751314	0.000526271	0.014278
7452041452	574520	4145230	0.011569001	0.000504922	0.012074
7444041452	574440	4145240	0.009560609	0.000475504	0.010036
7445041452	574450	4145240	0.007868306	0.000443877	0.008312
7446041452	574460	4145240	0.006480546	0.000422413	0.006903
7447041452	574470	4145240	0.003844306	0.000602694	0.004447
7448041452	574480	4145240	0.004532774	0.00068466	0.005217
7449041452	574490	4145240	0.005376399	0.000666346	0.006043
7450041452	574500	4145240	0.006549825	0.000703484	0.007253
7451041452	574510	4145240	0.007970783	0.000666051	0.008637
7445041452	574450	4145250	0.010019588	0.000700483	0.01072
7446041452	574460	4145250	0.01323388	0.000767794	0.014002
7447041452	574470	4145250	0.017532113	0.000819941	0.018352
7448041452	574480	4145250	0.022344893	0.000809888	0.023155
7446041452	574460	4145260	0.026097547	0.000810999	0.026909
7447041452	574470	4145260	0.027626754	0.000812107	0.028439
7448041452	574480	4145260	0.027472318	0.000755583	0.028228
7447041452	574470	4145270	0.023988844	0.000740931	0.02473
7449041451	574490	4145130	0.02008897	0.000639401	0.020728
7448041451	574480	4145140	0.015741664	0.000589815	0.016331
7449041451	574490	4145140	0.012142724	0.000561315	0.012704
7449041451	574490	4145150	0.009537516	0.000501179	0.010039
7450041451	574500	4145150	0.00759696	0.000456921	0.008054
7446041451	574460	4145160	0.003938122	0.000666086	0.004604
7449041451	574490	4145160	0.004682158	0.00076934	0.005451
7450041451	574500	4145160	0.005647745	0.000813255	0.006461
7451041451	574510	4145160	0.006895503	0.000771696	0.007667
7446041451	574460	4145170	0.008608734	0.000763779	0.009373
7447041451	574470	4145170	0.030530731	0.000895469	0.031426
7448041451	574480	4145170	0.021784881	0.000705313	0.02249
7449041451	574490	4145170	0.015546093	0.00059456	0.016141
7450041451	574500	4145170	0.011480958	0.000526286	0.012007
7451041451	574510	4145170	0.00870255	0.000527158	0.00923
7452041451	574520	4145170	0.003958329	0.000698169	0.004656
7446041451	574460	4145180	0.004746386	0.000806806	0.005553
7447041451	574470	4145180	0.005767541	0.000872646	0.00664
7448041451	574480	4145180	0.007083857	0.00083844	0.007922
7449041451	574490	4145180	0.050385882	0.00105609	0.051442
7450041451	574500	4145180	0.029578856	0.000852858	0.030432
7451041451	574510	4145180	0.019129878	0.000707908	0.019838
7452041451	574520	4145180	0.013296665	0.000713092	0.01401
7453041451	574530	4145180	0.009565661	0.000652108	0.010218
7445041451	574450	4145190	0.004036269	0.000941194	0.004977
7446041451	574460	4145190	0.004750716	0.000891996	0.005643
7447041451	574470	4145190	0.005785583	0.000967972	0.006754
7448041451	574480	4145190	0.007255613	0.001047857	0.008303
7449041451	574490	4145190	0.078366973	0.001832714	0.0802
7450041451	574500	4145190	0.038441615	0.00144832	0.03989
7451041451	574510	4145190	0.022857996	0.001086597	0.023945
7452041451	574520	4145190	0.015245881	0.000848406	0.016094
7444041452	574440	4145200	0.010712385	0.000735373	0.011448
7445041452	574450	4145200	0.004024722	0.001135125	0.00516
7446041452	574460	4145200	0.004765871	0.001172409	0.005938
7447041452	574470	4145200	0.005804346	0.001276304	0.007081
7448041452	574480	4145200	0.007212313	0.001256724	0.008469
7449041452	574490	4145200	0.104695452	0.004008104	0.108704
7450041452	574500	4145200	0.046700342	0.002102542	0.048803

Max GLC for Chronic Calcs

Max GLC: 0.004522

XY	X	Y	2025	2026	2027	2034	2035
57446041452	574460	4145230	0.0001671	0.0001671	0		
57447041452	574470	4145230	0.0001793	0.0001793	0		
57448041452	574480	4145230	0.0001842	0.0001842	0		
57449041452	574490	4145230	0.0001831	0.0001831	0		
57450041452	574500	4145230	0.0001657	0.0001657	0		
57451041452	574510	4145230	0.0001496	0.0001496	0		
57452041452	574520	4145230	0.0001265	0.0001265	0		
57444041452	574440	4145240	0.0001051	0.0001051	0		
57445041452	574450	4145240	8.707E-05	8.707E-05	0		
57446041452	574460	4145240	7.231E-05	7.231E-05	0		
57447041452	574470	4145240	4.658E-05	4.658E-05	0		
57448041452	574480	4145240	5.466E-05	5.466E-05	0		
57449041452	574490	4145240	6.33E-05	6.33E-05	0		
57450041452	574500	4145240	7.598E-05	7.598E-05	0		
57451041452	574510	4145240	9.048E-05	9.048E-05	0		
57445041452	574450	4145250	0.0001123	0.0001123	0		
57446041452	574460	4145250	0.0001467	0.0001467	0		
57447041452	574470	4145250	0.0001922	0.0001922	0		
57448041452	574480	4145250	0.0002426	0.0002426	0		
57446041452	574460	4145260	0.0002819	0.0002819	0		
57447041452	574470	4145260	0.0002979	0.0002979	0		
57448041452	574480	4145260	0.0002957	0.0002957	0		
57447041452	574470	4145270	0.0002591	0.0002591	0		
57449041451	574490	4145130	0.0002171	0.0002171	0		
57448041451	574480	4145140	0.0001711	0.0001711	0		
57449041451	574490	4145140	0.0001331	0.0001331	0		
57449041451	574490	4145150	0.0001052	0.0001052	0		
57450041451	574500	4145150	8.437E-05	8.437E-05	0		
57446041451	574460	4145160	4.823E-05	4.823E-05	0		
57449041451	574490	4145160	5.711E-05	5.711E-05	0		
57450041451	574500	4145160	6.768E-05	6.768E-05	0		
57451041451	574510	4145160	8.032E-05	8.032E-05	0		
57446041451	574460	4145170	9.818E-05	9.818E-05	0		
57447041451	574470	4145170	0.0003292	0.0003292	0		
57448041451	574480	4145170	0.0002356	0.0002356	0		
57449041451	574490	4145170	0.0001691	0.0001691	0		
57450041451	574500	4145170	0.0001258	0.0001258	0		
57451041451	574510	4145170	9.669E-05	9.669E-05	0		
57452041451	574520	4145170	4.878E-05	4.878E-05	0		
57446041451	574460	4145180	5.817E-05	5.817E-05	0		
57447041451	574470	4145180	6.956E-05	6.956E-05	0		
57448041451	574480	4145180	8.299E-05	8.299E-05	0		
57449041451	574490	4145180	0.0005389	0.0005389	0		
57450041451	574500	4145180	0.0003188	0.0003188	0		
57451041451	574510	4145180	0.0002078	0.0002078	0		
57452041451	574520	4145180	0.0001468	0.0001468	0		
57453041451	574530	4145180	0.000107	0.000107	0		
57445041451	574450	4145190	5.214E-05	5.214E-05	0		
57446041451	574460	4145190	5.911E-05	5.911E-05	0		
57447041451	574470	4145190	7.075E-05	7.075E-05	0		
57448041451	574480	4145190	8.698E-05	8.698E-05	0		
57449041451	574490	4145190	0.0008401	0.0008401	0		
57450041451	574500	4145190	0.0004179	0.0004179	0		
57451041451	574510	4145190	0.0002508	0.0002508	0		
57452041451	574520	4145190	0.0001686	0.0001686	0		
57444041452	574440	4145200	0.0001199	0.0001199	0		
57445041452	574450	4145200	5.405E-05	5.405E-05	0		
57446041452	574460	4145200	6.221E-05	6.221E-05	0		
57447041452	574470	4145200	7.417E-05	7.417E-05	0		
57448041452	574480	4145200	8.872E-05	8.872E-05	0		
57449041452	574490	4145200	0.0011387	0.0011387	0		
57450041452	574500	4145200	0.0005112	0.0005112	0		

Garvey Reservoir Rehab - Mitigated I/O Tower

Cancer Risk Summary & Maximum Annual GLC for Chronic Calculations

Cancer Risk Summary

Max Risk: 0.431645

XY	X	Y	Offroad Risk	Haul Risk	Total Risk
7451041452(	574510	4145200	0.026110537	0.001434808	0.027545
7443041452:	574430	4145210	0.017086846	0.001058059	0.018145
7444041452:	574440	4145210	0.011607249	0.000868181	0.012475
7445041452:	574450	4145210	0.003964824	0.001350036	0.005315
7446041452:	574460	4145210	0.00464824	0.001328539	0.005977
7447041452:	574470	4145210	0.00564558	0.001491356	0.007137
7448041452:	574480	4145210	0.007004474	0.001543281	0.008548
7449041452:	574490	4145210	0.271439604	0.031855423	0.303295
7450041452:	574500	4145210	0.109760093	0.006253237	0.116013
7451041452:	574510	4145210	0.05406204	0.002854796	0.056917
7443041452:	574430	4145220	0.029643806	0.001788773	0.031433
7444041452:	574440	4145220	0.018613888	0.001281366	0.019895
7445041452:	574450	4145220	0.013045526	0.000986455	0.014032
7446041452:	574460	4145220	0.003836368	0.001591035	0.005427
7447041452:	574470	4145220	0.004506072	0.001656676	0.006163
7448041452:	574480	4145220	0.005420421	0.001849671	0.00727
7449041452:	574490	4145220	0.006676838	0.001995579	0.008672
7450041452:	574500	4145220	0.173289647	0.050009267	0.223299
7451041452:	574510	4145220	0.145590727	0.022492635	0.168083
7452041452:	574520	4145220	0.090083915	0.007257848	0.097342
7453041452:	574530	4145220	0.053700486	0.003484342	0.057185
7444041452:	574440	4145230	0.032696446	0.002112004	0.034808
7445041452:	574450	4145230	0.020944142	0.001484772	0.022429
7446041452:	574460	4145230	0.01476886	0.001068051	0.015837
7447041452:	574470	4145230	0.003683375	0.001951985	0.005635
7448041452:	574480	4145230	0.004327099	0.002103636	0.006431
7449041452:	574490	4145230	0.005162787	0.002331687	0.007494
7450041452:	574500	4145230	0.00623085	0.002610948	0.008842
7451041452:	574510	4145230	0.060809601	0.009294707	0.070104
7452041452:	574520	4145230	0.084353178	0.050762165	0.135115
7444041452(	574440	4145240	0.083487903	0.020566065	0.104054
7445041452(	574450	4145240	0.06487185	0.006688581	0.07156
7446041452(	574460	4145240	0.044044617	0.003998108	0.048043
7447041452(	574470	4145240	0.02987979	0.002480938	0.032361
7448041452(	574480	4145240	0.02149838	0.001569582	0.023068
7449041452(	574490	4145240	0.015165776	0.001223592	0.016389
7450041452(	574500	4145240	0.003484195	0.002483809	0.005968
7451041452(	574510	4145240	0.00400668	0.002799862	0.006807
7445041452!	574450	4145250	0.004783913	0.003020694	0.007805
7446041452!	574460	4145250	0.005738675	0.003627264	0.009366
7447041452!	574470	4145250	0.007054269	0.003552382	0.010607
7448041452!	574480	4145250	0.015049588	0.004545986	0.019596
7446041452(	574460	4145260	0.020436812	0.005278501	0.025715
7447041452(	574470	4145260	0.027865625	0.006523675	0.034389
7448041452(	574480	4145260	0.038289344	0.011169507	0.049459
7447041452:	574470	4145270	0.047563453	0.049243014	0.096806
7449041451:	574490	4145130	0.050771251	0.020625888	0.071397
7448041451(	574480	4145140	0.044550504	0.006608985	0.051159
7449041451(	574490	4145140	0.03494876	0.003956153	0.038905
7449041451!	574490	4145150	0.026088165	0.002630089	0.028718
7450041451!	574500	4145150	0.01918256	0.00187166	0.021054
7446041451(	574460	4145160	0.014496071	0.001366574	0.015863
7449041451(	574490	4145160	0.003283573	0.004363434	0.007647
7450041451(	574500	4145160	0.003794511	0.004981688	0.008776
7451041451(	574510	4145160	0.004433906	0.004837272	0.009271
7446041451:	574460	4145170	0.005221963	0.005938646	0.011161
7447041451:	574470	4145170	0.006285696	0.006003438	0.012289
7448041451:	574480	4145170	0.007676343	0.006129229	0.013806
7449041451:	574490	4145170	0.009534629	0.006360515	0.015895
7450041451:	574500	4145170	0.012131899	0.007063873	0.019196
7451041451:	574510	4145170	0.015611764	0.007732169	0.023344
7452041451:	574520	4145170	0.020228251	0.008969244	0.029197

Max GLC for Chronic Calcs

Max GLC: 0.004522

XY	X	Y	2025	2026	2027	2034	2035
57451041452(	574510	4145200	0.0002886	0.0002886	0		
57443041452:	574430	4145210	0.0001901	0.0001901	0		
57444041452:	574440	4145210	0.0001307	0.0001307	0		
57445041452:	574450	4145210	5.568E-05	5.568E-05	0		
57446041452:	574460	4145210	6.261E-05	6.261E-05	0		
57447041452:	574470	4145210	7.476E-05	7.476E-05	0		
57448041452:	574480	4145210	8.954E-05	8.954E-05	0		
57449041452:	574490	4145210	0.0031772	0.0031772	0		
57450041452:	574500	4145210	0.0012153	0.0012153	0		
57451041452:	574510	4145210	0.0005962	0.0005962	0		
57443041452:	574430	4145220	0.0003293	0.0003293	0		
57444041452:	574440	4145220	0.0002084	0.0002084	0		
57445041452:	574450	4145220	0.000147	0.000147	0		
57446041452:	574460	4145220	5.686E-05	5.686E-05	0		
57447041452:	574470	4145220	6.456E-05	6.456E-05	0		
57448041452:	574480	4145220	7.616E-05	7.616E-05	0		
57449041452:	574490	4145220	9.085E-05	9.085E-05	0		
57450041452:	574500	4145220	0.0023392	0.0023392	0		
57451041452:	574510	4145220	0.0017608	0.0017608	0		
57452041452:	574520	4145220	0.0010197	0.0010197	0		
57453041452:	574530	4145220	0.000599	0.000599	0		
57444041452:	574440	4145230	0.0003646	0.0003646	0		
57445041452:	574450	4145230	0.000235	0.000235	0		
57446041452:	574460	4145230	0.0001659	0.0001659	0		
57447041452:	574470	4145230	5.903E-05	5.903E-05	0		
57448041452:	574480	4145230	6.737E-05	6.737E-05	0		
57449041452:	574490	4145230	7.851E-05	7.851E-05	0		
57450041452:	574500	4145230	9.262E-05	9.262E-05	0		
57451041452:	574510	4145230	0.0007344	0.0007344	0		
57452041452:	574520	4145230	0.0014154	0.0014154	0		
57444041452(	574440	4145240	0.00109	0.00109	0		
57445041452(	574450	4145240	0.0007496	0.0007496	0		
57446041452(	574460	4145240	0.0005033	0.0005033	0		
57447041452(	574470	4145240	0.000339	0.000339	0		
57448041452(	574480	4145240	0.0002416	0.0002416	0		
57449041452(	574490	4145240	0.0001717	0.0001717	0		
57450041452(	574500	4145240	6.252E-05	6.252E-05	0		
57451041452(	574510	4145240	7.13E-05	7.13E-05	0		
57445041452!	574450	4145250	8.176E-05	8.176E-05	0		
57446041452!	574460	4145250	9.811E-05	9.811E-05	0		
57447041452!	574470	4145250	0.0001111	0.0001111	0		
57448041452!	574480	4145250	0.0002053	0.0002053	0		
57446041452(	574460	4145260	0.0002694	0.0002694	0		
57447041452(	574470	4145260	0.0003602	0.0003602	0		
57448041452(	574480	4145260	0.0005181	0.0005181	0		
57447041452:	574470	4145270	0.0010141	0.0010141	0		
57449041451:	574490	4145130	0.0007479	0.0007479	0		
57448041451(	574480	4145140	0.0005359	0.0005359	0		
57449041451(	574490	4145140	0.0004076	0.0004076	0		
57449041451!	574490	4145150	0.0003008	0.0003008	0		
57450041451!	574500	4145150	0.0002206	0.0002206	0		
57446041451(	574460	4145160	0.0001662	0.0001662	0		
57449041451(	574490	4145160	8.011E-05	8.011E-05	0		
57450041451(	574500	4145160	9.194E-05	9.194E-05	0		
57451041451(	574510	4145160	9.712E-05	9.712E-05	0		
57446041451:	574460	4145170	0.0001169	0.0001169	0		
57447041451:	574470	4145170	0.0001287	0.0001287	0		
57448041451:	574480	4145170	0.0001446	0.0001446	0		
57449041451:	574490	4145170	0.0001665	0.0001665	0		
57450041451:	574500	4145170	0.0002011	0.0002011	0		
57451041451:	574510	4145170	0.0002445	0.0002445	0		
57452041451:	574520	4145170	0.0003059	0.0003059	0		

Garvey Reservoir Rehab - Mitigated I/O Tower

Cancer Risk Summary & Maximum Annual GLC for Chronic Calculations

Cancer Risk Summary

Max Risk: 0.431645

XY	X	Y	Offroad Risk	Haul Risk	Total Risk
7446041451	574460	4145180	0.025569289	0.014077407	0.039647
7447041451	574470	4145180	0.033332954	0.018719962	0.052053
7448041451	574480	4145180	0.031336108	0.007542353	0.038878
7449041451	574490	4145180	0.026737663	0.004113077	0.030851
7450041451	574500	4145180	0.021592197	0.002694822	0.024287
7451041451	574510	4145180	0.01687179	0.001987657	0.018859
7452041451	574520	4145180	0.013344295	0.001459515	0.014804
7453041451	574530	4145180	0.003106043	0.012670167	0.015776
7445041451	574450	4145190	0.003527495	0.015743583	0.019271
7446041451	574460	4145190	0.004099053	0.011541811	0.015641
7447041451	574470	4145190	0.004755046	0.01508192	0.019837
7448041451	574480	4145190	0.005562589	0.016150723	0.021713
7449041451	574490	4145190	0.006652302	0.016145059	0.022797
7450041451	574500	4145190	0.008097074	0.016701217	0.024798
7451041451	574510	4145190	0.009960411	0.017363826	0.027324
7452041451	574520	4145190	0.012286335	0.017792046	0.030078
7444041452	574440	4145200	0.015170828	0.019167619	0.034338
7445041452	574450	4145200	0.018316562	0.023082542	0.041399
7446041452	574460	4145200	0.021552505	0.07362195	0.095174
7447041452	574470	4145200	0.023094702	0.025580397	0.048675
7448041452	574480	4145200	0.022377368	0.008997187	0.031375
7449041452	574490	4145200	0.020085362	0.004825428	0.024911
7450041452	574500	4145200	0.017168394	0.003034803	0.020203
7451041452	574510	4145200	0.014268025	0.00207766	0.016346
7443041452	574430	4145210	0.01180715	0.001512405	0.01332
7444041452	574440	4145210	0.002892431	0.051011413	0.053904
7445041452	574450	4145210	0.003285738	0.065697139	0.068983
7446041452	574460	4145210	0.00372018	0.064330627	0.068051
7447041452	574470	4145210	0.004330708	0.070865113	0.075196
7448041452	574480	4145210	0.005009072	0.066835633	0.071845
7449041452	574490	4145210	0.005845481	0.072613003	0.078458
7450041452	574500	4145210	0.006963339	0.070278361	0.077242
7451041452	574510	4145210	0.008479556	0.068268288	0.076748
7443041452	574430	4145220	0.010103301	0.065645592	0.075749
7444041452	574440	4145220	0.011878595	0.066366083	0.078245
7445041452	574450	4145220	0.013890595	0.068210836	0.082101
7446041452	574460	4145220	0.015872285	0.071660974	0.087533
7447041452	574470	4145220	0.01687612	0.035235061	0.052111
7448041452	574480	4145220	0.016806119	0.009429555	0.026236
7449041452	574490	4145220	0.015681766	0.004821732	0.020503
7450041452	574500	4145220	0.013822037	0.002990872	0.016813
7451041452	574510	4145220	0.011937771	0.002067428	0.014005
7452041452	574520	4145220	0.010264953	0.001530142	0.011795
7453041452	574530	4145220	0.005911153	0.000687694	0.006599
7444041452	574440	4145230	0.006525289	0.000704124	0.007229
7445041452	574450	4145230	0.007146642	0.000656297	0.007803
7446041452	574460	4145230	0.007963566	0.000675269	0.008639
7447041452	574470	4145230	0.008652755	0.000648539	0.009301
7448041452	574480	4145230	0.009662364	0.000663647	0.010326
7449041452	574490	4145230	0.011125177	0.000693575	0.011819
7450041452	574500	4145230	0.012362832	0.000699404	0.013062
7451041452	574510	4145230	0.014112146	0.000738817	0.014851
7452041452	574520	4145230	0.016041155	0.000760335	0.016801
7444041452	574440	4145240	0.017818614	0.000758235	0.018577
7445041452	574450	4145240	0.019489989	0.000753201	0.020243
7446041452	574460	4145240	0.020852491	0.000750029	0.021603
7447041452	574470	4145240	0.021737251	0.000753859	0.022491
7448041452	574480	4145240	0.02224819	0.000754779	0.023003
7449041452	574490	4145240	0.022541907	0.000744854	0.023287
7450041452	574500	4145240	0.022458194	0.000729048	0.023187
7451041452	574510	4145240	0.022290046	0.00068758	0.022978
7445041452	574450	4145250	0.021096413	0.000687855	0.021784

Max GLC for Chronic Calcs

Max GLC: 0.004522

XY	X	Y	2025	2026	2027	2034	2035
574460414518	574460	4145180	0.0004153	0.0004153	0		
574470414518	574470	4145180	0.0005453	0.0005453	0		
574480414518	574480	4145180	0.0004073	0.0004073	0		
574490414518	574490	4145180	0.0003232	0.0003232	0		
574500414518	574500	4145180	0.0002544	0.0002544	0		
574510414518	574510	4145180	0.0001976	0.0001976	0		
574520414518	574520	4145180	0.0001551	0.0001551	0		
574530414518	574530	4145180	0.0001653	0.0001653	0		
574450414519	574450	4145190	0.0002019	0.0002019	0		
574460414519	574460	4145190	0.0001638	0.0001638	0		
574470414519	574470	4145190	0.0002078	0.0002078	0		
574480414519	574480	4145190	0.0002275	0.0002275	0		
574490414519	574490	4145190	0.0002388	0.0002388	0		
574500414519	574500	4145190	0.0002598	0.0002598	0		
574510414519	574510	4145190	0.0002862	0.0002862	0		
574520414519	574520	4145190	0.0003151	0.0003151	0		
574440414520	574440	4145200	0.0003597	0.0003597	0		
574450414520	574450	4145200	0.0004337	0.0004337	0		
574460414520	574460	4145200	0.000997	0.000997	0		
574470414520	574470	4145200	0.0005099	0.0005099	0		
574480414520	574480	4145200	0.0003287	0.0003287	0		
574490414520	574490	4145200	0.000261	0.000261	0		
574500414520	574500	4145200	0.0002116	0.0002116	0		
574510414520	574510	4145200	0.0001712	0.0001712	0		
574430414521	574430	4145210	0.0001395	0.0001395	0		
574440414521	574440	4145210	0.0005647	0.0005647	0		
574450414521	574450	4145210	0.0007226	0.0007226	0		
574460414521	574460	4145210	0.0007129	0.0007129	0		
574470414521	574470	4145210	0.0007877	0.0007877	0		
574480414521	574480	4145210	0.0007526	0.0007526	0		
574490414521	574490	4145210	0.0008219	0.0008219	0		
574500414521	574500	4145210	0.0008091	0.0008091	0		
574510414521	574510	4145210	0.000804	0.000804	0		
574430414522	574430	4145220	0.0007935	0.0007935	0		
574440414522	574440	4145220	0.0008197	0.0008197	0		
574450414522	574450	4145220	0.0008601	0.0008601	0		
574460414522	574460	4145220	0.000917	0.000917	0		
574470414522	574470	4145220	0.0005459	0.0005459	0		
574480414522	574480	4145220	0.0002748	0.0002748	0		
574490414522	574490	4145220	0.0002148	0.0002148	0		
574500414522	574500	4145220	0.0001761	0.0001761	0		
574510414522	574510	4145220	0.0001467	0.0001467	0		
574520414522	574520	4145220	0.0001236	0.0001236	0		
574530414522	574530	4145220	6.913E-05	6.913E-05	0		
574440414523	574440	4145230	7.573E-05	7.573E-05	0		
574450414523	574450	4145230	8.174E-05	8.174E-05	0		
574460414523	574460	4145230	9.05E-05	9.05E-05	0		
574470414523	574470	4145230	9.744E-05	9.744E-05	0		
574480414523	574480	4145230	0.0001082	0.0001082	0		
574490414523	574490	4145230	0.0001238	0.0001238	0		
574500414523	574500	4145230	0.0001368	0.0001368	0		
574510414523	574510	4145230	0.0001556	0.0001556	0		
574520414523	574520	4145230	0.000176	0.000176	0		
574440414524	574440	4145240	0.0001946	0.0001946	0		
574450414524	574450	4145240	0.0002121	0.0002121	0		
574460414524	574460	4145240	0.0002263	0.0002263	0		
574470414524	574470	4145240	0.0002356	0.0002356	0		
574480414524	574480	4145240	0.000241	0.000241	0		
574490414524	574490	4145240	0.0002439	0.0002439	0		
574500414524	574500	4145240	0.0002429	0.0002429	0		
574510414524	574510	4145240	0.0002407	0.0002407	0		
574450414525	574450	4145250	0.0002282	0.0002282	0		

Garvey Reservoir Rehab - Mitigated I/O Tower

Cancer Risk Summary & Maximum Annual GLC for Chronic Calculations

Cancer Risk Summary

Max Risk: 0.431645

XY	X	Y	Offroad Risk	Haul Risk	Total Risk
7446041452	574460	4145250	0.019598238	0.000685575	0.020284
7447041452	574470	4145250	0.018105836	0.00066716	0.018773
7448041452	574480	4145250	0.016951895	0.000589437	0.017541
7446041452	574460	4145260	0.015277634	0.00056981	0.015847
7447041452	574470	4145260	0.006094455	0.000734615	0.006829
7448041452	574480	4145260	0.006710757	0.000707733	0.007418
7447041452	574470	4145270	0.007388399	0.000670288	0.008059
7449041451	574490	4145130	0.008171405	0.000678401	0.00885
7448041451	574480	4145140	0.009172354	0.000696262	0.009869
7449041451	574490	4145140	0.010435988	0.000717168	0.011153
7449041451	574490	4145150	0.012144889	0.000773588	0.012918
7450041451	574500	4145150	0.013878327	0.000792398	0.014671
7446041451	574460	4145160	0.016089506	0.0008279	0.016917
7449041451	574490	4145160	0.018533062	0.000839728	0.019373
7450041451	574500	4145160	0.021100022	0.000839348	0.021939
7451041451	574510	4145160	0.023848119	0.000829019	0.024677
7446041451	574460	4145170	0.02623755	0.000824384	0.027062
7447041451	574470	4145170	0.027976761	0.000832106	0.028809
7448041451	574480	4145170	0.029036886	0.000838122	0.029875
7449041451	574490	4145170	0.029542051	0.000834357	0.030376
7450041451	574500	4145170	0.0293638	0.000823912	0.030188
7451041451	574510	4145170	0.029095341	0.000778302	0.029874
7452041451	574520	4145170	0.027488194	0.000759393	0.028248
7446041451	574460	4145180	0.025005669	0.000761818	0.025767
7447041451	574470	4145180	0.022507267	0.000746221	0.023253
7448041451	574480	4145180	0.02064826	0.000650268	0.021299
7449041451	574490	4145180	0.018183776	0.00063069	0.018814
7450041451	574500	4145180	0.006258273	0.000784306	0.007043
7451041451	574510	4145180	0.006945297	0.000779316	0.007725
7452041451	574520	4145180	0.007600569	0.000706759	0.008307
7453041451	574530	4145180	0.008533681	0.000727053	0.009261
7445041451	574450	4145190	0.009676075	0.000748957	0.010425
7446041451	574460	4145190	0.01139075	0.000835382	0.012226
7447041451	574470	4145190	0.01323388	0.000875129	0.014109
7448041451	574480	4145190	0.015426297	0.000898063	0.016324
7449041451	574490	4145190	0.018121713	0.000920449	0.019042
7450041451	574500	4145190	0.021347553	0.000931256	0.022279
7451041451	574510	4145190	0.025028041	0.000934064	0.025962
7452041451	574520	4145190	0.029293798	0.000924442	0.030218
7444041452	574440	4145200	0.033540793	0.000917064	0.034458
7445041452	574450	4145200	0.036647558	0.000936852	0.037584
7446041452	574460	4145200	0.038739663	0.000954075	0.039694
7447041452	574470	4145200	0.040600113	0.000941463	0.041542
7448041452	574480	4145200	0.041361469	0.000905135	0.042267
7449041452	574490	4145200	0.04017361	0.000857429	0.041031
7450041452	574500	4145200	0.037367779	0.000817444	0.038185
7451041452	574510	4145200	0.033088309	0.000850366	0.033939
7443041452	574430	4145210	0.024947214	0.000801565	0.025749
7444041452	574440	4145210	0.021849831	0.000685067	0.022535
7445041452	574450	4145210	0.006391059	0.000829346	0.00722
7446041452	574460	4145210	0.006992927	0.00073733	0.00773
7447041452	574470	4145210	0.00783511	0.000756708	0.008592
7448041452	574480	4145210	0.008934926	0.000790978	0.009726
7449041452	574490	4145210	0.031705601	0.000869649	0.032575
7450041452	574500	4145210	0.026411471	0.000755718	0.027167
7451041452	574510	4145210	0.006495701	0.000880431	0.007376
7443041452	574430	4145220	0.007134374	0.000791375	0.007926
7444041452	574440	4145220	0.008058104	0.000819722	0.008878
7445041452	574450	4145220	0.04025588	0.000924026	0.04118
7446041452	574460	4145220	0.031916327	0.000844688	0.032761
7447041452	574470	4145220	0.006495701	0.000863759	0.007359
7448041452	574480	4145220	0.007254891	0.00086002	0.008115

Max GLC for Chronic Calcs

Max GLC: 0.004522

XY	X	Y	2025	2026	2027	2034	2035
57446041452	574460	4145250	0.0002125	0.0002125	0		
57447041452	574470	4145250	0.0001967	0.0001967	0		
57448041452	574480	4145250	0.0001838	0.0001838	0		
57446041452	574460	4145260	0.000166	0.000166	0		
57447041452	574470	4145260	7.154E-05	7.154E-05	0		
57448041452	574480	4145260	7.771E-05	7.771E-05	0		
57447041452	574470	4145270	8.442E-05	8.442E-05	0		
57449041451	574490	4145130	9.271E-05	9.271E-05	0		
57448041451	574480	4145140	0.0001034	0.0001034	0		
57449041451	574490	4145140	0.0001168	0.0001168	0		
57449041451	574490	4145150	0.0001353	0.0001353	0		
57450041451	574500	4145150	0.0001537	0.0001537	0		
57446041451	574460	4145160	0.0001772	0.0001772	0		
57449041451	574490	4145160	0.0002029	0.0002029	0		
57450041451	574500	4145160	0.0002298	0.0002298	0		
57451041451	574510	4145160	0.0002585	0.0002585	0		
57446041451	574460	4145170	0.0002835	0.0002835	0		
57447041451	574470	4145170	0.0003018	0.0003018	0		
57448041451	574480	4145170	0.000313	0.000313	0		
57449041451	574490	4145170	0.0003182	0.0003182	0		
57450041451	574500	4145170	0.0003162	0.0003162	0		
57451041451	574510	4145170	0.0003129	0.0003129	0		
57452041451	574520	4145170	0.0002959	0.0002959	0		
57446041451	574460	4145180	0.0002699	0.0002699	0		
57447041451	574470	4145180	0.0002436	0.0002436	0		
57448041451	574480	4145180	0.0002231	0.0002231	0		
57449041451	574490	4145180	0.0001971	0.0001971	0		
57450041451	574500	4145180	7.377E-05	7.377E-05	0		
57451041451	574510	4145180	8.092E-05	8.092E-05	0		
57452041451	574520	4145180	8.702E-05	8.702E-05	0		
57453041451	574530	4145180	9.701E-05	9.701E-05	0		
57445041451	574450	4145190	0.0001092	0.0001092	0		
57446041451	574460	4145190	0.0001281	0.0001281	0		
57447041451	574470	4145190	0.0001478	0.0001478	0		
57448041451	574480	4145190	0.000171	0.000171	0		
57449041451	574490	4145190	0.0001995	0.0001995	0		
57450041451	574500	4145190	0.0002334	0.0002334	0		
57451041451	574510	4145190	0.000272	0.000272	0		
57452041451	574520	4145190	0.0003166	0.0003166	0		
57444041452	574440	4145200	0.000361	0.000361	0		
57445041452	574450	4145200	0.0003937	0.0003937	0		
57446041452	574460	4145200	0.0004158	0.0004158	0		
57447041452	574470	4145200	0.0004352	0.0004352	0		
57448041452	574480	4145200	0.0004428	0.0004428	0		
57449041452	574490	4145200	0.0004298	0.0004298	0		
57450041452	574500	4145200	0.0004	0.0004	0		
57451041452	574510	4145200	0.0003555	0.0003555	0		
57443041452	574430	4145210	0.0002697	0.0002697	0		
57444041452	574440	4145210	0.0002361	0.0002361	0		
57445041452	574450	4145210	7.564E-05	7.564E-05	0		
57446041452	574460	4145210	8.098E-05	8.098E-05	0		
57447041452	574470	4145210	9E-05	9E-05	0		
57448041452	574480	4145210	0.0001019	0.0001019	0		
57449041452	574490	4145210	0.0003412	0.0003412	0		
57450041452	574500	4145210	0.0002846	0.0002846	0		
57451041452	574510	4145210	7.727E-05	7.727E-05	0		
57443041452	574430	4145220	8.303E-05	8.303E-05	0		
57444041452	574440	4145220	9.3E-05	9.3E-05	0		
57445041452	574450	4145220	0.0004314	0.0004314	0		
57446041452	574460	4145220	0.0003432	0.0003432	0		
57447041452	574470	4145220	7.709E-05	7.709E-05	0		
57448041452	574480	4145220	8.501E-05	8.501E-05	0		

Garvey Reservoir Rehab - Mitigated I/O Tower

Cancer Risk Summary & Maximum Annual GLC for Chronic Calculations

Cancer Risk Summary

Max Risk: 0.431645

XY	X	Y	Offroad Risk	Haul Risk	Total Risk
7449041452	574490	4145220	0.050215569	0.00106192	0.051277
7450041452	574500	4145220	0.037886656	0.000962451	0.038849
7451041452	574510	4145220	0.006542609	0.000931179	0.007474
7452041452	574520	4145220	0.007354481	0.000962165	0.008317
7453041452	574530	4145220	0.062952944	0.001417724	0.064371
7444041452	574440	4145230	0.044958966	0.00132665	0.046286
7445041452	574450	4145230	0.006577249	0.001026872	0.007604
7446041452	574460	4145230	0.007418709	0.001079287	0.008498
7447041452	574470	4145230	0.076277033	0.001908244	0.078185
7448041452	574480	4145230	0.051454667	0.001757428	0.053212
7449041452	574490	4145230	0.006658797	0.001278664	0.007937
7450041452	574500	4145230	0.007402833	0.00117781	0.008581
7451041452	574510	4145230	0.146800236	0.004048323	0.150849
7452041452	574520	4145230	0.08793119	0.002932876	0.090864
7444041452	574440	4145240	0.05809903	0.002212921	0.060312
7445041452	574450	4145240	0.006598899	0.001377573	0.007976
7446041452	574460	4145240	0.007345821	0.001289343	0.008635
7447041452	574470	4145240	0.319016046	0.023996242	0.343012
7448041452	574480	4145240	0.15889966	0.006931299	0.165831
7449041452	574490	4145240	0.09881461	0.003971506	0.102786
7450041452	574500	4145240	0.064990924	0.002734474	0.067725
7451041452	574510	4145240	0.006506526	0.001490968	0.007997
7445041452	574450	4145250	0.007247675	0.001425685	0.008673
7446041452	574460	4145250	0.297433953	0.034957031	0.332391
7447041452	574470	4145250	0.154952156	0.008889431	0.163842
7448041452	574480	4145250	0.096990242	0.004792907	0.101783
7446041452	574460	4145260	0.065997646	0.003251244	0.069249
7447041452	574470	4145260	0.006369409	0.001595975	0.007965
7448041452	574480	4145260	0.007112002	0.001588406	0.0087
7447041452	574470	4145270	0.339036458	0.092608714	0.431645
7457041450	574570	4145030	0.234530082	0.024514952	0.259045
7463041450	574630	4145080	0.156958383	0.010804565	0.167763
7461041450	574610	4145090	0.104683184	0.005956416	0.11064
7462041450	574620	4145090	0.07158405	0.003864818	0.075449
7463041450	574630	4145090	0.006245283	0.001808413	0.008054
7464041450	574640	4145090	0.006947462	0.00179492	0.008742
7460041451	574600	4145100	0.00785676	0.00191339	0.00977
7461041451	574610	4145100	0.244027906	0.075238391	0.319266
7462041451	574620	4145100	0.222718602	0.055465894	0.278184
7463041451	574630	4145100	0.175847225	0.020430467	0.196278
7464041451	574640	4145100	0.131927456	0.010742458	0.14267
7465041451	574650	4145100	0.096518274	0.006460077	0.102978
7459041451	574590	4145110	0.070953315	0.004291898	0.075245
7460041451	574600	4145110	0.006072805	0.00200961	0.008082
7461041451	574610	4145110	0.006747561	0.002045566	0.008793
7462041451	574620	4145110	0.007594074	0.002144026	0.009738
7463041451	574630	4145110	0.144587613	0.018087159	0.162675
7464041451	574640	4145110	0.158187378	0.071639828	0.229827
7465041451	574650	4145110	0.152663037	0.055484395	0.208147
7466041451	574660	4145110	0.131272906	0.019667412	0.15094
7460041451	574600	4145120	0.105877539	0.010760622	0.116638
7461041451	574610	4145120	0.082951706	0.006804438	0.089756
7462041451	574620	4145120	0.064149464	0.004673776	0.068823
7463041451	574630	4145120	0.005920534	0.002280814	0.008201
7464041451	574640	4145120	0.006528176	0.002348809	0.008877
7465041451	574650	4145120	0.007303243	0.002433481	0.009737
7466041451	574660	4145120	0.079520914	0.009744156	0.089265
7460041451	574600	4145130	0.099935355	0.018974489	0.11891
7462041451	574620	4145130	0.109040593	0.071994175	0.181035
7463041451	574630	4145130	0.109928241	0.054171943	0.1641
7464041451	574640	4145130	0.101256	0.01817991	0.119436
7465041451	574650	4145130	0.08738056	0.009948282	0.097329

Max GLC for Chronic Calcs

Max GLC: 0.004522

XY	X	Y	2025	2026	2027	2034	2035
57449041452	574490	4145220	0.0005372	0.0005372	0		
57450041452	574500	4145220	0.000407	0.000407	0		
57451041452	574510	4145220	7.829E-05	7.829E-05	0		
57452041452	574520	4145220	8.712E-05	8.712E-05	0		
57453041452	574530	4145220	0.0006743	0.0006743	0		
57444041452	574440	4145230	0.0004849	0.0004849	0		
57445041452	574450	4145230	7.966E-05	7.966E-05	0		
57446041452	574460	4145230	8.902E-05	8.902E-05	0		
57447041452	574470	4145230	0.000819	0.000819	0		
57448041452	574480	4145230	0.0005574	0.0005574	0		
57449041452	574490	4145230	8.315E-05	8.315E-05	0		
57450041452	574500	4145230	8.989E-05	8.989E-05	0		
57451041452	574510	4145230	0.0015802	0.0015802	0		
57452041452	574520	4145230	0.0009519	0.0009519	0		
57444041452	574440	4145240	0.0006318	0.0006318	0		
57445041452	574450	4145240	8.356E-05	8.356E-05	0		
57446041452	574460	4145240	9.046E-05	9.046E-05	0		
57447041452	574470	4145240	0.0035932	0.0035932	0		
57448041452	574480	4145240	0.0017372	0.0017372	0		
57449041452	574490	4145240	0.0010767	0.0010767	0		
57450041452	574500	4145240	0.0007095	0.0007095	0		
57451041452	574510	4145240	8.378E-05	8.378E-05	0		
57445041452	574450	4145250	9.086E-05	9.086E-05	0		
57446041452	574460	4145250	0.003482	0.003482	0		
57447041452	574470	4145250	0.0017163	0.0017163	0		
57448041452	574480	4145250	0.0010662	0.0010662	0		
57446041452	574460	4145260	0.0007254	0.0007254	0		
57447041452	574470	4145260	8.344E-05	8.344E-05	0		
57448041452	574480	4145260	9.114E-05	9.114E-05	0		
57447041452	574470	4145270	0.0045217	0.0045217	0		
57457041450	574570	4145030	0.0027136	0.0027136	0		
57463041450	574630	4145080	0.0017574	0.0017574	0		
57461041450	574610	4145090	0.001159	0.001159	0		
57462041450	574620	4145090	0.0007904	0.0007904	0		
57463041450	574630	4145090	8.437E-05	8.437E-05	0		
57464041450	574640	4145090	9.158E-05	9.158E-05	0		
57460041451	574600	4145100	0.0001023	0.0001023	0		
57461041451	574610	4145100	0.0033445	0.0033445	0		
57462041451	574620	4145100	0.0029141	0.0029141	0		
57463041451	574630	4145100	0.0020561	0.0020561	0		
57464041451	574640	4145100	0.0014945	0.0014945	0		
57465041451	574650	4145100	0.0010788	0.0010788	0		
57459041451	574590	4145110	0.0007882	0.0007882	0		
57460041451	574600	4145110	8.467E-05	8.467E-05	0		
57461041451	574610	4145110	9.211E-05	9.211E-05	0		
57462041451	574620	4145110	0.000102	0.000102	0		
57463041451	574630	4145110	0.0017041	0.0017041	0		
57464041451	574640	4145110	0.0024076	0.0024076	0		
57465041451	574650	4145110	0.0021805	0.0021805	0		
57466041451	574660	4145110	0.0015812	0.0015812	0		
57460041451	574600	4145120	0.0012218	0.0012218	0		
57461041451	574610	4145120	0.0009402	0.0009402	0		
57462041451	574620	4145120	0.000721	0.000721	0		
57463041451	574630	4145120	8.591E-05	8.591E-05	0		
57464041451	574640	4145120	9.299E-05	9.299E-05	0		
57465041451	574650	4145120	0.000102	0.000102	0		
57466041451	574660	4145120	0.0009351	0.0009351	0		
57460041451	574600	4145130	0.0012456	0.0012456	0		
57462041451	574620	4145130	0.0018964	0.0018964	0		
57463041451	574630	4145130	0.001719	0.001719	0		
57464041451	574640	4145130	0.0012512	0.0012512	0		
57465041451	574650	4145130	0.0010196	0.0010196	0		

Garvey Reservoir Rehab - Mitigated I/O Tower

Cancer Risk Summary & Maximum Annual GLC for Chronic Calculations

Cancer Risk Summary

Max Risk: 0.431645

XY	X	Y	Offroad Risk	Haul Risk	Total Risk
7463041451	574630	4145140	0.070619185	0.007044581	0.077664
7464041451	574640	4145140	0.056958079	0.004947266	0.061905
7459041451	574590	4145150	0.005709087	0.002601602	0.008311
7460041451	574600	4145150	0.006279923	0.002712701	0.008993
7460041451	574600	4145160	0.007000866	0.002818191	0.009819
7461041451	574610	4145160	0.039661228	0.005550054	0.045211
7461041451	574610	4145170	0.048456151	0.007050897	0.055507
7457041450	574570	4145030	0.059185857	0.01019751	0.069383
7463041450	574630	4145080	0.070732486	0.018864277	0.089597
7461041450	574610	4145090	0.079349158	0.070682135	0.150031
7462041450	574620	4145090	0.081513429	0.046752875	0.128266
7463041450	574630	4145090	0.077413654	0.017907952	0.095322
7464041450	574640	4145090	0.069692568	0.009884294	0.079577
7460041451	574600	4145100	0.060435058	0.006160523	0.066596
7461041451	574610	4145100	0.051019503	0.004462956	0.055482
7462041451	574620	4145100	0.005491144	0.003025504	0.008517
7463041451	574630	4145100	0.006030949	0.00319044	0.009221
7464041451	574640	4145100	0.006681168	0.003296786	0.009978
7465041451	574650	4145100	0.007500257	0.003172807	0.010673
7459041451	574590	4145110	0.027426131	0.005250003	0.032676
7460041451	574600	4145110	0.032796035	0.006143128	0.038939
7461041451	574610	4145110	0.038982142	0.007718834	0.046701
7462041451	574620	4145110	0.046273117	0.011021086	0.057294
7463041451	574630	4145110	0.053250889	0.019329679	0.072581
7464041451	574640	4145110	0.060090824	0.064384568	0.124475
7465041451	574650	4145110	0.062128082	0.045087722	0.107216
7466041451	574660	4145110	0.060363613	0.01803695	0.078401
7460041451	574600	4145120	0.056086308	0.00966032	0.065747
7461041451	574610	4145120	0.050248044	0.006231463	0.05648
7462041451	574620	4145120	0.043856263	0.004437459	0.048294
7463041451	574630	4145120	0.00528114	0.003530773	0.008812
7464041451	574640	4145120	0.005771871	0.003831384	0.009603
7465041451	574650	4145120	0.006386008	0.003817698	0.010204
7466041451	574660	4145120	0.007093239	0.003683319	0.010777
7460041451	574600	4145130	0.007918823	0.003641334	0.01156
7462041451	574620	4145130	0.013055629	0.00448637	0.017542
7463041451	574630	4145130	0.015082063	0.004755478	0.019838
7464041451	574640	4145130	0.017336542	0.005165338	0.022502
7465041451	574650	4145130	0.020356707	0.005544874	0.025902
7463041451	574630	4145140	0.023808428	0.006099828	0.029908
7464041451	574640	4145140	0.027548814	0.006929277	0.034478
7459041451	574590	4145150	0.032331284	0.008704692	0.041036
7460041451	574600	4145150	0.037314376	0.012338519	0.049653
7460041451	574600	4145160	0.041829108	0.021579935	0.063409
7461041451	574610	4145160	0.045410728	0.068770446	0.114181
7461041451	574610	4145170	0.048518214	0.04477715	0.093295
7457041450	574570	4145030	0.047925728	0.018032796	0.065959
7463041450	574630	4145080	0.045685682	0.00937821	0.055064
7461041450	574610	4145090	0.041971276	0.006186474	0.048158
7462041450	574620	4145090	0.037586443	0.004474802	0.042061
7463041450	574630	4145090	0.00506464	0.004255785	0.00932
7464041450	574640	4145090	0.005502691	0.004819072	0.010322
7460041451	574600	4145100	0.00607064	0.004528536	0.010599
7461041451	574610	4145100	0.006697045	0.004555945	0.011253
7462041451	574620	4145100	0.007425926	0.004637275	0.012063
7463041451	574630	4145100	0.008283263	0.004734048	0.013017
7464041451	574640	4145100	0.009295037	0.004880137	0.014175
7465041451	574650	4145100	0.010474958	0.005144842	0.01562
7459041451	574590	4145110	0.011895915	0.005399047	0.017295
7460041451	574600	4145110	0.013535536	0.005789174	0.019325
7461041451	574610	4145110	0.015447947	0.006228327	0.021676
7462041451	574620	4145110	0.017796242	0.006615414	0.024412

Max GLC for Chronic Calcs

Max GLC: 0.004522

XY	X	Y	2025	2026	2027	2034	2035
57463041451	574630	4145140	0.0008136	0.0008136	0		
57464041451	574640	4145140	0.0006485	0.0006485	0		
57459041451	574590	4145150	8.706E-05	8.706E-05	0		
57460041451	574600	4145150	9.42E-05	9.42E-05	0		
57460041451	574600	4145160	0.0001029	0.0001029	0		
57461041451	574610	4145160	0.0004736	0.0004736	0		
57461041451	574610	4145170	0.0005815	0.0005815	0		
57457041450	574570	4145030	0.0007268	0.0007268	0		
57463041450	574630	4145080	0.0009386	0.0009386	0		
57461041450	574610	4145090	0.0015717	0.0015717	0		
57462041450	574620	4145090	0.0013437	0.0013437	0		
57463041450	574630	4145090	0.0009985	0.0009985	0		
57464041450	574640	4145090	0.0008336	0.0008336	0		
57460041451	574600	4145100	0.0006976	0.0006976	0		
57461041451	574610	4145100	0.0005812	0.0005812	0		
57462041451	574620	4145100	8.922E-05	8.922E-05	0		
57463041451	574630	4145100	9.66E-05	9.66E-05	0		
57464041451	574640	4145100	0.0001045	0.0001045	0		
57465041451	574650	4145100	0.0001118	0.0001118	0		
57459041451	574590	4145110	0.0003423	0.0003423	0		
57460041451	574600	4145110	0.0004079	0.0004079	0		
57461041451	574610	4145110	0.0004892	0.0004892	0		
57462041451	574620	4145110	0.0006002	0.0006002	0		
57463041451	574630	4145110	0.0007603	0.0007603	0		
57464041451	574640	4145110	0.0013039	0.0013039	0		
57465041451	574650	4145110	0.0011231	0.0011231	0		
57466041451	574660	4145110	0.0008213	0.0008213	0		
57460041451	574600	4145120	0.0006887	0.0006887	0		
57461041451	574610	4145120	0.0005917	0.0005917	0		
57462041451	574620	4145120	0.0005059	0.0005059	0		
57463041451	574630	4145120	9.231E-05	9.231E-05	0		
57464041451	574640	4145120	0.0001006	0.0001006	0		
57465041451	574650	4145120	0.0001069	0.0001069	0		
57466041451	574660	4145120	0.0001129	0.0001129	0		
57460041451	574600	4145130	0.0001211	0.0001211	0		
57462041451	574620	4145130	0.0001838	0.0001838	0		
57463041451	574630	4145130	0.0002078	0.0002078	0		
57464041451	574640	4145130	0.0002357	0.0002357	0		
57465041451	574650	4145130	0.0002713	0.0002713	0		
57463041451	574630	4145140	0.0003133	0.0003133	0		
57464041451	574640	4145140	0.0003612	0.0003612	0		
57459041451	574590	4145150	0.0004299	0.0004299	0		
57460041451	574600	4145150	0.0005201	0.0005201	0		
57460041451	574600	4145160	0.0006642	0.0006642	0		
57461041451	574610	4145160	0.0011961	0.0011961	0		
57461041451	574610	4145170	0.0009773	0.0009773	0		
57457041450	574570	4145030	0.000691	0.000691	0		
57463041450	574630	4145080	0.0005768	0.0005768	0		
57461041450	574610	4145090	0.0005045	0.0005045	0		
57462041450	574620	4145090	0.0004406	0.0004406	0		
57463041450	574630	4145090	9.764E-05	9.764E-05	0		
57464041450	574640	4145090	0.0001081	0.0001081	0		
57460041451	574600	4145100	0.000111	0.000111	0		
57461041451	574610	4145100	0.0001179	0.0001179	0		
57462041451	574620	4145100	0.0001264	0.0001264	0		
57463041451	574630	4145100	0.0001364	0.0001364	0		
57464041451	574640	4145100	0.0001485	0.0001485	0		
57465041451	574650	4145100	0.0001636	0.0001636	0		
57459041451	574590	4145110	0.0001812	0.0001812	0		
57460041451	574600	4145110	0.0002024	0.0002024	0		
57461041451	574610	4145110	0.0002271	0.0002271	0		
57462041451	574620	4145110	0.0002557	0.0002557	0		

Garvey Reservoir Rehab - Mitigated I/O Tower

Cancer Risk Summary & Maximum Annual GLC for Chronic Calculations

Cancer Risk Summary

Max Risk: 0.431645

XY	X	Y	Offroad Risk	Haul Risk	Total Risk
7463041451	574630	4145110	0.020435369	0.00713739	0.027573
7464041451	574640	4145110	0.023238313	0.00792086	0.031159
7465041451	574650	4145110	0.026061464	0.009524293	0.035586
7466041451	574660	4145110	0.03020959	0.013933727	0.044143
7460041451	574600	4145120	0.033672858	0.027460293	0.061133
7461041451	574610	4145120	0.036625908	0.095654587	0.13228
7462041451	574620	4145120	0.038654506	0.040334388	0.078989
7463041451	574630	4145120	0.038655228	0.017770802	0.056426
7464041451	574640	4145120	0.037527267	0.010358602	0.047886
7465041451	574650	4145120	0.035317531	0.006149034	0.041467
7466041451	574660	4145120	0.03230386	0.004518428	0.036822
7460041451	574600	4145130	0.004832264	0.005485594	0.010318
7462041451	574620	4145130	0.00523784	0.006507211	0.011745
7463041451	574630	4145130	0.005719911	0.006753982	0.012474
7464041451	574640	4145130	0.0062958	0.006638139	0.012934
7465041451	574650	4145130	0.006930143	0.006716177	0.013646
7463041451	574630	4145140	0.007685725	0.006671328	0.014357
7464041451	574640	4145140	0.008535846	0.006782524	0.015318
7459041451	574590	4145150	0.009542567	0.006879956	0.016423
7460041451	574600	4145150	0.010719602	0.00725234	0.017972
7460041451	574600	4145160	0.012116022	0.007638685	0.019755
7461041451	574610	4145160	0.013687086	0.007968529	0.021656
7461041451	574610	4145170	0.015496298	0.008308648	0.023805
7457041450	574570	4145030	0.017580465	0.008783109	0.026364
7463041450	574630	4145080	0.019968452	0.009634303	0.029603
7461041450	574610	4145090	0.021999215	0.011250765	0.03325
7462041450	574620	4145090	0.024995566	0.0156888	0.040684
7463041450	574630	4145090	0.027799953	0.035578328	0.063378
7464041450	574640	4145090	0.029954843	0.097724199	0.127679
7460041451	574600	4145100	0.03145374	0.032706955	0.064161
7461041451	574610	4145100	0.031940142	0.016557936	0.048498
7462041451	574620	4145100	0.031311572	0.010343003	0.041655
7463041451	574630	4145100	0.029874017	0.007058535	0.036933
7464041451	574640	4145100	0.027857686	0.005122976	0.032981
7465041451	574650	4145100	0	0	0
7459041451	574590	4145110	0	0	0
7460041451	574600	4145110	0	0	0
7461041451	574610	4145110	0	0	0
7462041451	574620	4145110	0	0	0
7463041451	574630	4145110	0	0	0
7464041451	574640	4145110	0	0	0
7465041451	574650	4145110	0	0	0
7466041451	574660	4145110	0	0	0
7460041451	574600	4145120	0	0	0
7461041451	574610	4145120	0	0	0
7462041451	574620	4145120	0	0	0
7463041451	574630	4145120	0	0	0
7464041451	574640	4145120	0	0	0
7465041451	574650	4145120	0	0	0
7466041451	574660	4145120	0	0	0
7460041451	574600	4145130	0	0	0
7462041451	574620	4145130	0	0	0
7463041451	574630	4145130	0	0	0
7464041451	574640	4145130	0	0	0
7465041451	574650	4145130	0	0	0
7463041451	574630	4145140	0	0	0
7464041451	574640	4145140	0	0	0
7459041451	574590	4145150	0	0	0
7460041451	574600	4145150	0	0	0
7460041451	574600	4145160	0	0	0
7461041451	574610	4145160	0	0	0
7461041451	574610	4145170	0	0	0

Max GLC for Chronic Calcs

Max GLC: 0.004522

XY	X	Y	2025	2026	2027	2034	2035
57463041451	574630	4145110	0.0002888	0.0002888	0		
57464041451	574640	4145110	0.0003264	0.0003264	0		
57465041451	574650	4145110	0.0003728	0.0003728	0		
57466041451	574660	4145110	0.0004624	0.0004624	0		
57460041451	574600	4145120	0.0006404	0.0006404	0		
57461041451	574610	4145120	0.0013857	0.0013857	0		
57462041451	574620	4145120	0.0008275	0.0008275	0		
57463041451	574630	4145120	0.0005911	0.0005911	0		
57464041451	574640	4145120	0.0005016	0.0005016	0		
57465041451	574650	4145120	0.0004344	0.0004344	0		
57466041451	574660	4145120	0.0003857	0.0003857	0		
57460041451	574600	4145130	0.0001081	0.0001081	0		
57462041451	574620	4145130	0.000123	0.000123	0		
57463041451	574630	4145130	0.0001307	0.0001307	0		
57464041451	574640	4145130	0.0001355	0.0001355	0		
57465041451	574650	4145130	0.000143	0.000143	0		
57463041451	574630	4145140	0.0001504	0.0001504	0		
57464041451	574640	4145140	0.0001605	0.0001605	0		
57459041451	574590	4145150	0.000172	0.000172	0		
57460041451	574600	4145150	0.0001883	0.0001883	0		
57460041451	574600	4145160	0.0002069	0.0002069	0		
57461041451	574610	4145160	0.0002269	0.0002269	0		
57461041451	574610	4145170	0.0002494	0.0002494	0		
57457041450	574570	4145030	0.0002762	0.0002762	0		
57463041450	574630	4145080	0.0003101	0.0003101	0		
57461041450	574610	4145090	0.0003483	0.0003483	0		
57462041450	574620	4145090	0.0004262	0.0004262	0		
57463041450	574630	4145090	0.0006639	0.0006639	0		
57464041450	574640	4145090	0.0013375	0.0013375	0		
57460041451	574600	4145100	0.0006721	0.0006721	0		
57461041451	574610	4145100	0.000508	0.000508	0		
57462041451	574620	4145100	0.0004364	0.0004364	0		
57463041451	574630	4145100	0.0003869	0.0003869	0		
57464041451	574640	4145100	0.0003455	0.0003455	0		
57465041451	574650	4145100	0	0	0		
57459041451	574590	4145110	0	0	0		
57460041451	574600	4145110	0	0	0		
57461041451	574610	4145110	0	0	0		
57462041451	574620	4145110	0	0	0		
57463041451	574630	4145110	0	0	0		
57464041451	574640	4145110	0	0	0		
57465041451	574650	4145110	0	0	0		
57466041451	574660	4145110	0	0	0		
57460041451	574600	4145120	0	0	0		
57461041451	574610	4145120	0	0	0		
57462041451	574620	4145120	0	0	0		
57463041451	574630	4145120	0	0	0		
57464041451	574640	4145120	0	0	0		
57465041451	574650	4145120	0	0	0		
57466041451	574660	4145120	0	0	0		
57460041451	574600	4145130	0	0	0		
57462041451	574620	4145130	0	0	0		
57463041451	574630	4145130	0	0	0		
57464041451	574640	4145130	0	0	0		
57465041451	574650	4145130	0	0	0		
57463041451	574630	4145140	0	0	0		
57464041451	574640	4145140	0	0	0		
57459041451	574590	4145150	0	0	0		
57460041451	574600	4145150	0	0	0		
57460041451	574600	4145160	0	0	0		
57461041451	574610	4145160	0	0	0		
57461041451	574610	4145170	0	0	0		

Garvey Reservoir Rehab - Mitigated I/O Tower

Construction Modeling Assumptions

AERMOD Sources

Volume Sources		
Offroad Construction Exhaust		
Release Height	3.66	m
Emissions rate	1	g/s
Init Vert Dimension	3.4	m
Line Volume		
Onroad Hauling Exhaust		
Plume Height	7.315	m
Plume Width	20	m
Release Height	3.66	m
Emissions rate	1	g/s

Meteorology:

SCAQMD	Pico	Rivera	2010 - 2012, 2015 - 2016

SCAQMD Met Data

https://www.aqmd.gov/home/air-quality/meteorological-data/data-for-aermod

AERMOD Sources

Garvey Reservoir Rehab - Mitigated I/O Tower

Health Risk Assessment Risk Factors

Residential Risk	Abbreviation	UOM	3rd Trimester	0<2	2<16	16<30
Daily Breathing Rate (95th %'ile)	DBR	L/kg-day	361	1090	572	261
Fraction Of Time At Home [a]	FAH	unitless	1	1	1	0.73
Exposure Frequency	EF	days/year	0.96	0.96	0.96	0.96
Age Sensitivity Factor	ASF	unitless	10	10	3	1
Inhalation Absorption Factor	A	unitless	1	1	1	1
Conversion Factor	CF_1	m^3/L	0.001	0.001	0.001	0.001
Conversion Factor	CF_2	$\mu g/m^3$	0.001	0.001	0.001	0.001
Cancer Potency Factor (diesel exhaust)	CPF	$mg/kg\text{-}day^{-1}$	1.1	1.1	1.1	1.1
Averaging Time (for residential exposure)	AT	years	70.00	70.00	70.00	70.00

[a] assume school or daycare will have cancer risk of >1 per million

Garvey Reservoir Rehab - Mitigated I/O Tower

Health Risk Assessment Exposure Duration Assumptions for Offroad Equipment

Residential Receptors

			Start Date	*11/1/2025*	*1/31/2026*
			End Date	*1/30/2026*	*1/31/2028*

	11/1/2025	*7/31/2026*	*Days*	*90*	*730*
Phase	Start Date	End Date	Duration (days)	3rd Tri	0<2
Demolition - 2025			1	0	0
Demolition - 2026			1	0	0
Site Preparation - 2025			1	0	0
Site Preparation - 2026			1	0	0
Grading - 2025			1	0	0
Grading - 2026			1	0	0
Infrastructure - 2025	11/1/2025	12/31/2025	61	61	0
Infrastructure - 2026	1/1/2026	7/31/2026	212	30	182
Paving - 2025			1	0	0
Architectural Coating - 2026			1	0	0

			Intake Factor for Inhalation, IF (m^3/kg-day)			Risk Calculation Part 1, R1		
Phase	Year	Year	Equation	3rd Trimester	0<2	Equation	3rd Trimester	0<2
Demolition - 2025		1900		0	0		0	0
Demolition - 2026		1900	$\frac{DBR \cdot FAH \cdot EF \cdot ED \cdot ASF \cdot A \cdot CF_1}{AT}$	0	0		0	0
Site Preparation - 2025		1900		0	0		0	0
Site Preparation - 2026		1900		0	0	$IF \cdot CPF \cdot CF_2$	0	0
Grading - 2025		1900		0	0		0	0
Grading - 2026		1900		0	0		0	0
Infrastructure - 2025		2025		0.00826459	0		9.09105E-06	0
Infrastructure - 2026		2026		0.004064552	0.074452993		4.47101E-06	8.18983E-05
Paving - 2025		1900		0	0		0	0
Architectural Coating - 2026		1900		0	0		0	0

Exposure Durations

Garvey Reservoir Rehab - Mitigated I/O Tower

Offroad DPM Emissions, Ground Level Concentrations and Health Risk Calculations

Residential Receptors

Phase	Year	Emissions (lbs/day)	Work Hours Per Day	Emissions (g/s)
Demolition - 2025	1900		10	0
Demolition - 2026	1900		10	0
Site Preparation - 2025	1900		10	0
Site Preparation - 2026	1900		10	0
Grading - 2025	1900		10	0
Grading - 2026	1900		10	0
Infrastructure - 2025	2025	0.060	10	0.000755983
Infrastructure - 2026	2026	0.060	10	0.000755983
Paving - 2025	1900		10	0
Architectural Coating - 2026	1900		10	0

		AERMOD Column Identifier:	*4*	*4*	*4*	*4*	*4*	*4*	*4*	*4*	*4*	*4*				
Garvey Reservoir Rehab - Mitigated I/O Tower			Demolition - 2025	Demolition - 2026	ite Preparation - 202	ite Preparation - 202	Grading - 2025	Grading - 2026	nfrastructure - 202	nfrastructure - 202	Paving - 2025	itectural Coating -	Child Risk			
Unique Identifier	X (UTM)	Y (UTM)	1900	1900	1900	1900	1900	1900	2025	2026	1900	1900	3rd Trimester	0<2	Total	per million
396166.283767377.2	396166.28	3767377	0	0	0	0	0	0	3.29382E-05	3.29382E-05	0	0	4.4671E-10	2.69758E-09	3.14429E-09	0.0031443
396266.283767377.2	396266.28	3767377	0	0	0	0	0	0	3.64157E-05	3.64157E-05	0	0	4.93872E-10	2.98239E-09	3.47626E-09	0.0034763
396366.283767377.2	396366.28	3767377	0	0	0	0	0	0	4.16396E-05	4.16396E-05	0	0	5.64718E-10	3.41021E-09	3.97493E-09	0.0039749
396466.283767377.2	396466.28	3767377	0	0	0	0	0	0	4.67424E-05	4.67424E-05	0	0	6.33924E-10	3.82813E-09	4.46205E-09	0.0044621
396566.283767377.2	396566.28	3767377	0	0	0	0	0	0	5.2813E-05	5.2813E-05	0	0	7.16253E-10	4.32529E-09	5.04155E-09	0.0050415
396666.283767377.2	396666.28	3767377	0	0	0	0	0	0	5.69407E-05	5.69407E-05	0	0	7.72233E-10	4.66334E-09	5.43558E-09	0.0054356
396766.283767377.2	396766.28	3767377	0	0	0	0	0	0	5.95942E-05	5.95942E-05	0	0	8.08219E-10	4.88066E-09	5.68888E-09	0.0056889
396866.283767377.2	396866.28	3767377	0	0	0	0	0	0	6.22325E-05	6.22325E-05	0	0	8.44001E-10	5.09674E-09	5.94074E-09	0.0059407
396966.283767377.2	396966.28	3767377	0	0	0	0	0	0	6.60881E-05	6.60881E-05	0	0	8.9629E-10	5.4125E-09	6.30879E-09	0.0063088
397066.283767377.2	397066.28	3767377	0	0	0	0	0	0	6.82729E-05	6.82729E-05	0	0	9.2592E-10	5.59143E-09	6.51735E-09	0.0065174
397166.283767377.2	397166.28	3767377	0	0	0	0	0	0	6.77361E-05	6.77361E-05	0	0	9.18641E-10	5.54747E-09	6.46611E-09	0.0064661
397266.283767377.2	397266.28	3767377	0	0	0	0	0	0	6.52338E-05	6.52338E-05	0	0	8.84705E-10	5.34254E-09	6.22724E-09	0.0062272
397366.283767377.2	397366.28	3767377	0	0	0	0	0	0	6.42737E-05	6.42737E-05	0	0	8.71684E-10	5.26391E-09	6.13559E-09	0.0061356
397466.283767377.2	397466.28	3767377	0	0	0	0	0	0	6.21343E-05	6.21343E-05	0	0	8.42668E-10	5.08869E-09	5.93136E-09	0.0059314
397566.283767377.2	397566.28	3767377	0	0	0	0	0	0	5.77496E-05	5.77496E-05	0	0	7.83203E-10	4.72959E-09	5.51279E-09	0.0055128
397666.283767377.2	397666.28	3767377	0	0	0	0	0	0	5.29793E-05	5.29793E-05	0	0	7.18508E-10	4.33892E-09	5.05742E-09	0.0050574
397766.283767377.2	397766.28	3767377	0	0	0	0	0	0	4.68558E-05	4.68558E-05	0	0	6.35462E-10	3.83741E-09	4.47288E-09	0.0044729
397866.283767377.2	397866.28	3767377	0	0	0	0	0	0	4.20327E-05	4.20327E-05	0	0	5.70049E-10	3.4424E-09	4.01245E-09	0.0040125
396166.283767477.2	396166.28	3767477	0	0	0	0	0	0	3.53498E-05	3.53498E-05	0	0	4.79416E-10	2.89509E-09	3.3745E-09	0.0033745
396266.283767477.2	396266.28	3767477	0	0	0	0	0	0	3.89785E-05	3.89785E-05	0	0	5.28629E-10	3.19227E-09	3.7209E-09	0.0037209
396366.283767477.2	396366.28	3767477	0	0	0	0	0	0	4.56236E-05	4.56236E-05	0	0	6.1875E-10	3.73649E-09	4.35524E-09	0.0043552
396466.283767477.2	396466.28	3767477	0	0	0	0	0	0	5.2692E-05	5.2692E-05	0	0	7.14612E-10	4.31539E-09	5.03E-09	0.00503
396566.283767477.2	396566.28	3767477	0	0	0	0	0	0	6.01687E-05	6.01687E-05	0	0	8.16012E-10	4.92771E-09	5.74373E-09	0.0057437
396666.283767477.2	396666.28	3767477	0	0	0	0	0	0	6.69348E-05	6.69348E-05	0	0	9.07773E-10	5.48184E-09	6.38962E-09	0.0063896
396766.283767477.2	396766.28	3767477	0	0	0	0	0	0	7.29751E-05	7.29751E-05	0	0	9.89692E-10	5.97653E-09	6.96623E-09	0.0069662
396866.283767477.2	396866.28	3767477	0	0	0	0	0	0	7.83123E-05	7.83123E-05	0	0	1.06208E-09	6.41364E-09	7.47572E-09	0.0074757
396966.283767477.2	396966.28	3767477	0	0	0	0	0	0	8.45643E-05	8.45643E-05	0	0	1.14687E-09	6.92567E-09	8.07254E-09	0.0080725
397066.283767477.2	397066.28	3767477	0	0	0	0	0	0	8.86012E-05	8.86012E-05	0	0	1.20162E-09	7.25629E-09	8.45791E-09	0.0084579
397166.283767477.2	397166.28	3767477	0	0	0	0	0	0	8.876E-05	8.876E-05	0	0	1.20377E-09	7.26929E-09	8.47306E-09	0.0084731
397266.283767477.2	397266.28	3767477	0	0	0	0	0	0	8.55622E-05	8.55622E-05	0	0	1.1604E-09	7.0074E-09	8.1678E-09	0.0081678
397366.283767477.2	397366.28	3767477	0	0	0	0	0	0	8.21678E-05	8.21678E-05	0	0	1.11436E-09	6.7294E-09	7.84377E-09	0.0078438
397466.283767477.2	397466.28	3767477	0	0	0	0	0	0	7.85693E-05	7.85693E-05	0	0	1.06556E-09	6.4347E-09	7.50026E-09	0.0075003
397566.283767477.2	397566.28	3767477	0	0	0	0	0	0	7.19318E-05	7.19318E-05	0	0	9.75543E-10	5.89109E-09	6.86664E-09	0.0068666
397666.283767477.2	397666.28	3767477	0	0	0	0	0	0	6.42283E-05	6.42283E-05	0	0	8.71068E-10	5.26019E-09	6.13126E-09	0.0061313
397766.283767477.2	397766.28	3767477	0	0	0	0	0	0	5.66232E-05	5.66232E-05	0	0	7.67926E-10	4.63734E-09	5.40527E-09	0.0054053
397866.283767477.2	397866.28	3767477	0	0	0	0	0	0	4.97059E-05	4.97059E-05	0	0	6.74114E-10	4.07083E-09	4.74494E-09	0.0047449
396166.283767577.2	396166.28	3767577	0	0	0	0	0	0	3.69222E-05	3.69222E-05	0	0	5.00741E-10	3.02387E-09	3.52461E-09	0.0035246
396266.283767577.2	396266.28	3767577	0	0	0	0	0	0	4.17378E-05	4.17378E-05	0	0	5.66051E-10	3.41826E-09	3.98431E-09	0.0039843
396366.283767577.2	396366.28	3767577	0	0	0	0	0	0	4.87534E-05	4.87534E-05	0	0	6.61196E-10	3.99282E-09	4.65401E-09	0.004654
396466.283767577.2	396466.28	3767577	0	0	0	0	0	0	5.78025E-05	5.78025E-05	0	0	7.83921E-10	4.73392E-09	5.51785E-09	0.0055178
396566.283767577.2	396566.28	3767577	0	0	0	0	0	0	6.8734E-05	6.8734E-05	0	0	9.32174E-10	5.6292E-09	6.56137E-09	0.0065614

Garvey Reservoir Rehab - Mitigated I/O Tower			Demolition - 2025	Demolition - 2026	ite Preparation - 202	te Preparation - 202	Grading - 2025	Grading - 2026	nfrastructure - 202	nfrastructure - 202	Paving - 2025	itectural Coating -	Child Risk			
Unique Identifier	X (UTM)	Y (UTM)	1900	1900	1900	1900	1900	1900	2025	2026	1900	1900	3rd Trimester	0<2	Total	per million
396666.283767577.2	396666.28	3767577	0	0	0	0	0	0	8.07693E-05	8.07693E-05	0	0	1.0954E-09	6.61486E-09	7.71026E-09	0.0077103
396766.283767577.2	396766.28	3767577	0	0	0	0	0	0	8.89339E-05	8.89339E-05	0	0	1.20613E-09	7.28353E-09	8.48966E-09	0.0084897
396866.283767577.2	396866.28	3767577	0	0	0	0	0	0	0.000101461	0.000101461	0	0	1.37601E-09	8.30944E-09	9.68546E-09	0.0096855
396966.283767577.2	396966.28	3767577	0	0	0	0	0	0	0.000111424	0.000111424	0	0	1.51114E-09	9.12547E-09	1.06366E-08	0.0106366
397066.283767577.2	397066.28	3767577	0	0	0	0	0	0	0.000118364	0.000118364	0	0	1.60526E-09	9.69383E-09	1.12991E-08	0.0112991
397166.283767577.2	397166.28	3767577	0	0	0	0	0	0	0.000121381	0.000121381	0	0	1.64617E-09	9.94087E-09	1.1587E-08	0.011587
397266.283767577.2	397266.28	3767577	0	0	0	0	0	0	0.000117571	0.000117571	0	0	1.5945E-09	9.62883E-09	1.12233E-08	0.0112233
397366.283767577.2	397366.28	3767577	0	0	0	0	0	0	0.000110449	0.000110449	0	0	1.49792E-09	9.0456E-09	1.05435E-08	0.0105435
397466.283767577.2	397466.28	3767577	0	0	0	0	0	0	0.000103592	0.000103592	0	0	1.40493E-09	8.48404E-09	9.88897E-09	0.009889
397566.283767577.2	397566.28	3767577	0	0	0	0	0	0	9.1852E-05	9.1852E-05	0	0	1.2457E-09	7.52252E-09	8.76822E-09	0.0087682
397666.283767577.2	397666.28	3767577	0	0	0	0	0	0	7.97033E-05	7.97033E-05	0	0	1.08094E-09	6.52757E-09	7.60851E-09	0.0076085
397766.283767577.2	397766.28	3767577	0	0	0	0	0	0	6.8167E-05	6.8167E-05	0	0	9.24485E-10	5.58276E-09	6.50725E-09	0.0065072
397866.283767577.2	397866.28	3767577	0	0	0	0	0	0	5.82561E-05	5.82561E-05	0	0	7.90072E-10	4.77107E-09	5.56115E-09	0.0055611
396166.283767677.2	396166.28	3767677	0	0	0	0	0	0	3.88651E-05	3.88651E-05	0	0	5.27091E-10	3.18299E-09	3.71008E-09	0.0037101
396266.283767677.2	396266.28	3767677	0	0	0	0	0	0	4.44216E-05	4.44216E-05	0	0	6.02448E-10	3.63805E-09	4.2405E-09	0.0042405
396366.283767677.2	396366.28	3767677	0	0	0	0	0	0	5.27374E-05	5.27374E-05	0	0	7.15228E-10	4.3191E-09	5.03433E-09	0.0050343
396466.283767677.2	396466.28	3767677	0	0	0	0	0	0	6.39637E-05	6.39637E-05	0	0	8.6748E-10	5.23852E-09	6.106E-09	0.006106
396566.283767677.2	396566.28	3767677	0	0	0	0	0	0	7.73144E-05	7.73144E-05	0	0	1.04854E-09	6.33192E-09	7.38046E-09	0.0073805
396666.283767677.2	396666.28	3767677	0	0	0	0	0	0	9.0839E-05	9.0839E-05	0	0	1.23196E-09	7.43956E-09	8.67152E-09	0.0086715
396766.283767677.2	396766.28	3767677	0	0	0	0	0	0	0.000111039	0.000111039	0	0	1.50591E-09	9.09389E-09	1.05998E-08	0.0105998
396866.283767677.2	396866.28	3767677	0	0	0	0	0	0	0.000136251	0.000136251	0	0	1.84784E-09	1.11587E-08	1.30066E-08	0.0130066
396966.283767677.2	396966.28	3767677	0	0	0	0	0	0	0.000160004	0.000160004	0	0	2.16998E-09	1.3104E-08	1.5274E-08	0.015274
397066.283767677.2	397066.28	3767677	0	0	0	0	0	0	0.000172258	0.000172258	0	0	2.33618E-09	1.41077E-08	1.64438E-08	0.0164438
397166.283767677.2	397166.28	3767677	0	0	0	0	0	0	0.000177308	0.000177308	0	0	2.40467E-09	1.45212E-08	1.69259E-08	0.0169259
397266.283767677.2	397266.28	3767677	0	0	0	0	0	0	0.000176779	0.000176779	0	0	2.39749E-09	1.44779E-08	1.68754E-08	0.0168754
397366.283767677.2	397366.28	3767677	0	0	0	0	0	0	0.000159263	0.000159263	0	0	2.15993E-09	1.30434E-08	1.52033E-08	0.0152033
397466.283767677.2	397466.28	3767677	0	0	0	0	0	0	0.000144053	0.000144053	0	0	1.95365E-09	1.17977E-08	1.37513E-08	0.0137513
397566.283767677.2	397566.28	3767677	0	0	0	0	0	0	0.000121192	0.000121192	0	0	1.64361E-09	9.92539E-09	1.1569E-08	0.011569
397666.283767677.2	397666.28	3767677	0	0	0	0	0	0	0.000100153	0.000100153	0	0	1.35828E-09	8.20233E-09	9.56061E-09	0.0095606
397766.283767677.2	397766.28	3767677	0	0	0	0	0	0	8.24249E-05	8.24249E-05	0	0	1.11785E-09	6.75046E-09	7.86831E-09	0.0078683
397866.283767677.2	397866.28	3767677	0	0	0	0	0	0	6.78873E-05	6.78873E-05	0	0	9.20691E-10	5.55985E-09	6.48055E-09	0.0064805
396166.283767777.2	396166.28	3767777	0	0	0	0	0	0	4.02712E-05	4.02712E-05	0	0	5.46161E-10	3.29815E-09	3.84431E-09	0.0038443
396266.283767777.2	396266.28	3767777	0	0	0	0	0	0	4.74833E-05	4.74833E-05	0	0	6.43971E-10	3.8888E-09	4.53277E-09	0.0045328
396366.283767777.2	396366.28	3767777	0	0	0	0	0	0	5.63208E-05	5.63208E-05	0	0	7.63825E-10	4.61257E-09	5.3764E-09	0.0053764
396466.283767777.2	396466.28	3767777	0	0	0	0	0	0	6.8613E-05	6.8613E-05	0	0	9.30534E-10	5.61929E-09	6.54983E-09	0.0065498
396566.283767777.2	396566.28	3767777	0	0	0	0	0	0	8.34984E-05	8.34984E-05	0	0	1.13241E-09	6.83837E-09	7.97078E-09	0.0079708
396666.283767777.2	396666.28	3767777	0	0	0	0	0	0	0.000104961	0.000104961	0	0	1.42348E-09	8.5961E-09	1.00196E-08	0.0100196
396766.283767777.2	396766.28	3767777	0	0	0	0	0	0	0.000138632	0.000138632	0	0	1.88014E-09	1.13537E-08	1.32339E-08	0.0132339
396866.283767777.2	396866.28	3767777	0	0	0	0	0	0	0.000183659	0.000183659	0	0	2.49079E-09	1.50413E-08	1.75321E-08	0.0175321
396966.283767777.2	396966.28	3767777	0	0	0	0	0	0	0.000234075	0.000234075	0	0	3.17454E-09	1.91704E-08	2.23449E-08	0.0223449
397066.283767777.2	397066.28	3767777	0	0	0	0	0	0	0.000273386	0.000273386	0	0	3.70768E-09	2.23899E-08	2.60975E-08	0.0260975
397166.283767777.2	397166.28	3767777	0	0	0	0	0	0	0.000289406	0.000289406	0	0	3.92493E-09	2.37018E-08	2.76268E-08	0.0276268
397266.283767777.2	397266.28	3767777	0	0	0	0	0	0	0.000287788	0.000287788	0	0	3.90299E-09	2.35693E-08	2.74723E-08	0.0274723
397366.283767777.2	397366.28	3767777	0	0	0	0	0	0	0.000251296	0.000251296	0	0	3.4081E-09	2.05807E-08	2.39888E-08	0.0239888
397466.283767777.2	397466.28	3767777	0	0	0	0	0	0	0.000210443	0.000210443	0	0	2.85404E-09	1.72349E-08	2.0089E-08	0.020089
397566.283767777.2	397566.28	3767777	0	0	0	0	0	0	0.000164903	0.000164903	0	0	2.23642E-09	1.35052E-08	1.57417E-08	0.0157417
397666.283767777.2	397666.28	3767777	0	0	0	0	0	0	0.000127202	0.000127202	0	0	1.72512E-09	1.04176E-08	1.21427E-08	0.0121427
397766.283767777.2	397766.28	3767777	0	0	0	0	0	0	9.99108E-05	9.99108E-05	0	0	1.355E-09	8.18252E-09	9.53752E-09	0.0095375
397866.283767777.2	397866.28	3767777	0	0	0	0	0	0	7.95824E-05	7.95824E-05	0	0	1.0793E-09	6.51766E-09	7.59696E-09	0.007597
396166.283767877.2	396166.28	3767877	0	0	0	0	0	0	4.1254E-05	4.1254E-05	0	0	5.59489E-10	3.37863E-09	3.93812E-09	0.0039381
396266.283767877.2	396266.28	3767877	0	0	0	0	0	0	4.90482E-05	4.90482E-05	0	0	6.65194E-10	4.01696E-09	4.68216E-09	0.0046822
396366.283767877.2	396366.28	3767877	0	0	0	0	0	0	5.91633E-05	5.91633E-05	0	0	8.02375E-10	4.84537E-09	5.64775E-09	0.0056477
396466.283767877.2	396466.28	3767877	0	0	0	0	0	0	7.22342E-05	7.22342E-05	0	0	9.79644E-10	5.91586E-09	6.8955E-09	0.0068955
396566.283767877.2	396566.28	3767877	0	0	0	0	0	0	9.01813E-05	9.01813E-05	0	0	1.22304E-09	7.38569E-09	8.60873E-09	0.0086087
397466.283767877.2	397466.28	3767877	0	0	0	0	0	0	0.000319826	0.000319826	0	0	4.3375E-09	2.61932E-08	3.05307E-08	0.0305307
397566.283767877.2	397566.28	3767877	0	0	0	0	0	0	0.000228209	0.000228209	0	0	3.09498E-09	1.86899E-08	2.17849E-08	0.0217849
397666.283767877.2	397666.28	3767877	0	0	0	0	0	0	0.000162854	0.000162854	0	0	2.20863E-09	1.33375E-08	1.55461E-08	0.0155461
397766.283767877.2	397766.28	3767877	0	0	0	0	0	0	0.000120269	0.000120269	0	0	1.6311E-09	9.84986E-09	1.1481E-08	0.011481
397866.283767877.2	397866.28	3767877	0	0	0	0	0	0	9.1164E-05	9.1164E-05	0	0	1.23637E-09	7.46618E-09	8.70255E-09	0.0087026
396166.283767977.2	396166.28	3767977	0	0	0	0	0	0	4.14657E-05	4.14657E-05	0	0	5.6236E-10	3.39597E-09	3.95833E-09	0.0039583
396266.283767977.2	396266.28	3767977	0	0	0	0	0	0	4.9721E-05	4.9721E-05	0	0	6.74319E-10	4.07207E-09	4.74639E-09	0.0047464
396366.283767977.2	396366.28	3767977	0	0	0	0	0	0	6.04182E-05	6.04182E-05	0	0	8.19395E-10	4.94815E-09	5.76754E-09	0.0057675
396466.283767977.2	396466.28	3767977	0	0	0	0	0	0	7.42073E-05	7.42073E-05	0	0	1.0064E-09	6.07745E-09	7.08386E-09	0.0070839
397466.283767977.2	397466.28	3767977	0	0	0	0	0	0	0.00052782	0.00052782	0	0	7.15832E-09	4.32276E-08	5.03859E-08	0.0503859
397566.283767977.2	397566.28	3767977	0	0	0	0	0	0	0.000309855	0.000309855	0	0	4.20227E-09	2.53766E-08	2.95789E-08	0.0295789
397666.283767977.2	397666.28	3767977	0	0	0	0	0	0	0.000200396	0.000200396	0	0	2.71778E-09	1.64121E-08	1.91299E-08	0.0191299
397766.283767977.2	397766.28	3767977	0	0	0	0	0	0	0.00013929	0.00013929	0	0	1.88906E-09	1.14076E-08	1.32967E-08	0.0132967
397866.283767977.2	397866.28	3767977	0	0	0	0	0	0	0.000100206	0.000100206	0	0	1.35899E-09	8.20667E-09	9.56566E-09	0.0095657
396166.283768077.2	396166.28	3768077	0	0	0	0	0	0	4.22821E-05	4.22821E-05	0	0	5.73433E-10	3.46284E-09	4.03627E-09	0.0040363

Garvey Reservoir Rehab - Mitigated I/O Tower			Demolition - 2025	Demolition - 2026	ite Preparation - 202	te Preparation - 202	Grading - 2025	Grading - 2026	nfrastructure - 202	nfrastructure - 202	Paving - 2025	itectural Coating -	Child Risk			
Unique Identifier	X (UTM)	Y (UTM)	1900	1900	1900	1900	1900	1900	2025	2026	1900	1900	3rd Trimester	0<2	Total	per million
396266.283768077.2	396266.28	3768077	0	0	0	0	0	0	4.97664E-05	4.97664E-05	0	0	6.74935E-10	4.07578E-09	4.75072E-09	0.0047507
396366.283768077.2	396366.28	3768077	0	0	0	0	0	0	6.06072E-05	6.06072E-05	0	0	8.21958E-10	4.96362E-09	5.78558E-09	0.0057856
396466.283768077.2	396466.28	3768077	0	0	0	0	0	0	7.60066E-05	7.60066E-05	0	0	1.03081E-09	6.22481E-09	7.25561E-09	0.0072556
397466.283768077.2	397466.28	3768077	0	0	0	0	0	0	0.000820937	0.000820937	0	0	1.11336E-08	6.72334E-08	7.8367E-08	0.078367
397566.283768077.2	397566.28	3768077	0	0	0	0	0	0	0.000402697	0.000402697	0	0	5.4614E-09	3.29802E-08	3.84416E-08	0.0384416
397666.283768077.2	397666.28	3768077	0	0	0	0	0	0	0.00023945	0.00023945	0	0	3.24744E-09	1.96106E-08	2.2858E-08	0.022858
397766.283768077.2	397766.28	3768077	0	0	0	0	0	0	0.000159709	0.000159709	0	0	2.16598E-09	1.30799E-08	1.52459E-08	0.0152459
397866.283768077.2	397866.28	3768077	0	0	0	0	0	0	0.000112218	0.000112218	0	0	1.52191E-09	9.19048E-09	1.07124E-08	0.0107124
396166.283768177.2	396166.28	3768177	0	0	0	0	0	0	4.21612E-05	4.21612E-05	0	0	5.71792E-10	3.45293E-09	4.02472E-09	0.0040247
396266.283768177.2	396266.28	3768177	0	0	0	0	0	0	4.99251E-05	4.99251E-05	0	0	6.77088E-10	4.08878E-09	4.76587E-09	0.0047659
396366.283768177.2	396366.28	3768177	0	0	0	0	0	0	6.08037E-05	6.08037E-05	0	0	8.24624E-10	4.97972E-09	5.80435E-09	0.0058043
396466.283768177.2	396466.28	3768177	0	0	0	0	0	0	7.5553E-05	7.5553E-05	0	0	1.02465E-09	6.18766E-09	7.21231E-09	0.0072123
397466.283768177.2	397466.28	3768177	0	0	0	0	0	0	0.001096743	0.001096743	0	0	1.48741E-08	8.98214E-08	1.04695E-07	0.1046955
397566.283768177.2	397566.28	3768177	0	0	0	0	0	0	0.000489212	0.000489212	0	0	6.63472E-09	4.00656E-08	4.67003E-08	0.0467003
397666.283768177.2	397666.28	3768177	0	0	0	0	0	0	0.000273522	0.000273522	0	0	3.70953E-09	2.2401E-08	2.61105E-08	0.0261105
397766.283768177.2	397766.28	3768177	0	0	0	0	0	0	0.000178994	0.000178994	0	0	2.42753E-09	1.46593E-08	1.70868E-08	0.0170868
397866.283768177.2	397866.28	3768177	0	0	0	0	0	0	0.000121592	0.000121592	0	0	1.64904E-09	9.95821E-09	1.16072E-08	0.0116072
396166.283768277.2	396166.28	3768277	0	0	0	0	0	0	4.15337E-05	4.15337E-05	0	0	5.63283E-10	3.40154E-09	3.96482E-09	0.0039648
396266.283768277.2	396266.28	3768277	0	0	0	0	0	0	4.86929E-05	4.86929E-05	0	0	6.60376E-10	3.98786E-09	4.64824E-09	0.0046482
396366.283768277.2	396366.28	3768277	0	0	0	0	0	0	5.91406E-05	5.91406E-05	0	0	8.02068E-10	4.84351E-09	5.64558E-09	0.0056456
396466.283768277.2	396466.28	3768277	0	0	0	0	0	0	7.33757E-05	7.33757E-05	0	0	9.95126E-10	6.00935E-09	7.00447E-09	0.0070045
397366.283768277.2	397366.28	3768277	0	0	0	0	0	0	0.00284348	0.00284348	0	0	3.85634E-08	2.32876E-07	2.7144E-07	0.2714396
397466.283768277.2	397466.28	3768277	0	0	0	0	0	0	0.001149798	0.001149798	0	0	1.55936E-08	9.41665E-08	1.0976E-07	0.1097601
397566.283768277.2	397566.28	3768277	0	0	0	0	0	0	0.00056633	0.00056633	0	0	7.6806E-09	4.63814E-08	5.4062E-08	0.054062
397666.283768277.2	397666.28	3768277	0	0	0	0	0	0	0.000310535	0.000310535	0	0	4.2115E-09	2.54323E-08	2.96438E-08	0.0296438
397766.283768277.2	397766.28	3768277	0	0	0	0	0	0	0.000194991	0.000194991	0	0	2.64448E-09	1.59694E-08	1.86139E-08	0.0186139
397866.283768277.2	397866.28	3768277	0	0	0	0	0	0	0.000136659	0.000136659	0	0	1.85338E-09	1.11921E-08	1.30455E-08	0.0130455
396166.283768377.2	396166.28	3768377	0	0	0	0	0	0	4.01881E-05	4.01881E-05	0	0	5.45033E-10	3.29133E-09	3.83637E-09	0.0038364
396266.283768377.2	396266.28	3768377	0	0	0	0	0	0	4.72036E-05	4.72036E-05	0	0	6.40178E-10	3.86589E-09	4.50607E-09	0.0045061
396366.283768377.2	396366.28	3768377	0	0	0	0	0	0	5.67819E-05	5.67819E-05	0	0	7.70079E-10	4.65034E-09	5.42042E-09	0.0054204
396466.283768377.2	396466.28	3768377	0	0	0	0	0	0	6.99436E-05	6.99436E-05	0	0	9.48579E-10	5.72826E-09	6.67684E-09	0.0066768
397266.283768377.2	397266.28	3768377	0	0	0	0	0	0	0.001815305	0.001815305	0	0	2.46193E-08	1.4867E-07	1.7329E-07	0.1732896
397366.283768377.2	397366.28	3768377	0	0	0	0	0	0	0.001525143	0.001525143	0	0	2.06841E-08	1.24907E-07	1.45591E-07	0.1455907
397466.283768377.2	397466.28	3768377	0	0	0	0	0	0	0.000943679	0.000943679	0	0	1.27982E-08	7.72857E-08	9.00839E-08	0.0900839
397566.283768377.2	397566.28	3768377	0	0	0	0	0	0	0.000562542	0.000562542	0	0	7.62923E-09	4.60713E-08	5.37005E-08	0.0537005
397666.283768377.2	397666.28	3768377	0	0	0	0	0	0	0.000342513	0.000342513	0	0	4.64519E-09	2.80513E-08	3.26964E-08	0.0326964
397766.283768377.2	397766.28	3768377	0	0	0	0	0	0	0.000219401	0.000219401	0	0	2.97554E-09	1.79686E-08	2.09441E-08	0.0209441
397866.283768377.2	397866.28	3768377	0	0	0	0	0	0	0.000154712	0.000154712	0	0	2.09821E-09	1.26706E-08	1.47689E-08	0.0147689
396166.283768477.2	396166.28	3768477	0	0	0	0	0	0	3.85854E-05	3.85854E-05	0	0	5.23297E-10	3.16008E-09	3.68337E-09	0.0036834
396266.283768477.2	396266.28	3768477	0	0	0	0	0	0	4.53288E-05	4.53288E-05	0	0	6.14751E-10	3.71235E-09	4.3271E-09	0.0043271
396366.283768477.2	396366.28	3768477	0	0	0	0	0	0	5.4083E-05	5.4083E-05	0	0	7.33477E-10	4.42931E-09	5.16279E-09	0.0051628
396466.283768477.2	396466.28	3768477	0	0	0	0	0	0	6.52716E-05	6.52716E-05	0	0	8.85217E-10	5.34563E-09	6.23085E-09	0.0062308
397166.283768477.2	397166.28	3768477	0	0	0	0	0	0	0.000637014	0.000637014	0	0	8.63922E-09	5.21704E-08	6.08096E-08	0.0608096
397266.283768477.2	397266.28	3768477	0	0	0	0	0	0	0.000883646	0.000883646	0	0	1.19841E-08	7.23691E-08	8.43532E-08	0.0843532
397366.283768477.2	397366.28	3768477	0	0	0	0	0	0	0.000874582	0.000874582	0	0	1.18611E-08	7.16268E-08	8.34879E-08	0.0834879
397466.283768477.2	397466.28	3768477	0	0	0	0	0	0	0.000679569	0.000679569	0	0	9.21635E-09	5.56555E-08	6.48718E-08	0.0648718
397566.283768477.2	397566.28	3768477	0	0	0	0	0	0	0.000461392	0.000461392	0	0	6.25742E-09	3.77872E-08	4.40446E-08	0.0440446
397666.283768477.2	397666.28	3768477	0	0	0	0	0	0	0.000313007	0.000313007	0	0	4.24502E-09	2.56348E-08	2.98798E-08	0.0298798
397766.283768477.2	397766.28	3768477	0	0	0	0	0	0	0.000225207	0.000225207	0	0	3.05428E-09	1.84441E-08	2.14984E-08	0.0214984
397866.283768477.2	397866.28	3768477	0	0	0	0	0	0	0.00015887	0.00015887	0	0	2.1546E-09	1.30112E-08	1.51658E-08	0.0151658
396166.283768577.2	396166.28	3768577	0	0	0	0	0	0	3.64989E-05	3.64989E-05	0	0	4.95E-10	2.9892E-09	3.4842E-09	0.0034842
396266.283768577.2	396266.28	3768577	0	0	0	0	0	0	4.19722E-05	4.19722E-05	0	0	5.69229E-10	3.43745E-09	4.00668E-09	0.0040067
396366.283768577.2	396366.28	3768577	0	0	0	0	0	0	5.01141E-05	5.01141E-05	0	0	6.79651E-10	4.10426E-09	4.78391E-09	0.0047839
396466.283768577.2	396466.28	3768577	0	0	0	0	0	0	6.01158E-05	6.01158E-05	0	0	8.15294E-10	4.92338E-09	5.73867E-09	0.0057387
396566.283768577.2	396566.28	3768577	0	0	0	0	0	0	7.38974E-05	7.38974E-05	0	0	1.0022E-09	6.05207E-09	7.05427E-09	0.0070543
396866.283768577.2	396866.28	3768577	0	0	0	0	0	0	0.000157653	0.000157653	0	0	2.1381E-09	1.29115E-08	1.50496E-08	0.0150496
396966.283768577.2	396966.28	3768577	0	0	0	0	0	0	0.000214087	0.000214087	0	0	2.90346E-09	1.75334E-08	2.04368E-08	0.0204368
397066.283768577.2	397066.28	3768577	0	0	0	0	0	0	0.000291908	0.000291908	0	0	3.95887E-09	2.39068E-08	2.78656E-08	0.0278656
397166.283768577.2	397166.28	3768577	0	0	0	0	0	0	0.000401102	0.000401102	0	0	5.43977E-09	3.28496E-08	3.82893E-08	0.0382893
397266.283768577.2	397266.28	3768577	0	0	0	0	0	0	0.000498253	0.000498253	0	0	6.75734E-09	4.08061E-08	4.75635E-08	0.0475635
397366.283768577.2	397366.28	3768577	0	0	0	0	0	0	0.000531857	0.000531857	0	0	7.21307E-09	4.35582E-08	5.07713E-08	0.0507713
397466.283768577.2	397466.28	3768577	0	0	0	0	0	0	0.000466691	0.000466691	0	0	6.32929E-09	3.82212E-08	4.45505E-08	0.0445505
397566.283768577.2	397566.28	3768577	0	0	0	0	0	0	0.000366108	0.000366108	0	0	4.96517E-09	2.99836E-08	3.49488E-08	0.0349488
397666.283768577.2	397666.28	3768577	0	0	0	0	0	0	0.000273288	0.000273288	0	0	3.70635E-09	2.23818E-08	2.60882E-08	0.0260882
397766.283768577.2	397766.28	3768577	0	0	0	0	0	0	0.000200948	0.000200948	0	0	2.72527E-09	1.64573E-08	1.91826E-08	0.0191826
397866.283768577.2	397866.28	3768577	0	0	0	0	0	0	0.000151854	0.000151854	0	0	2.05946E-09	1.24366E-08	1.44961E-08	0.0144961
396166.283768677.2	396166.28	3768677	0	0	0	0	0	0	3.43972E-05	3.43972E-05	0	0	4.66497E-10	2.81708E-09	3.28357E-09	0.0032836
396266.283768677.2	396266.28	3768677	0	0	0	0	0	0	3.97496E-05	3.97496E-05	0	0	5.39086E-10	3.25542E-09	3.79451E-09	0.0037945
396366.283768677.2	396366.28	3768677	0	0	0	0	0	0	4.64476E-05	4.64476E-05	0	0	6.29925E-10	3.80398E-09	4.43391E-09	0.0044339

Garvey Reservoir Rehab - Mitigated I/O Tower			Demolition - 2025	Demolition - 2026	ite Preparation - 202	te Preparation - 202	Grading - 2025	Grading - 2026	nfrastructure - 202	nfrastructure - 202	Paving - 2025	itectural Coating -	Child Risk			
Unique Identifier	X (UTM)	Y (UTM)	1900	1900	1900	1900	1900	1900	2025	2026	1900	1900	3rd Trimester	0<2	Total	per million
396466.283768677.2	396466.28	3768677	0	0	0	0	0	0	5.4703E-05	5.4703E-05	0	0	7.41885E-10	4.48008E-09	5.22196E-09	0.005222
396566.283768677.2	396566.28	3768677	0	0	0	0	0	0	6.58461E-05	6.58461E-05	0	0	8.93009E-10	5.39269E-09	6.2857E-09	0.0062857
396666.283768677.2	396666.28	3768677	0	0	0	0	0	0	8.04139E-05	8.04139E-05	0	0	1.09058E-09	6.58576E-09	7.67634E-09	0.0076763
396766.283768677.2	396766.28	3768677	0	0	0	0	0	0	9.98805E-05	9.98805E-05	0	0	1.35459E-09	8.18004E-09	9.53463E-09	0.0095346
396866.283768677.2	396866.28	3768677	0	0	0	0	0	0	0.000127088	0.000127088	0	0	1.72358E-09	1.04083E-08	1.21319E-08	0.0121319
396966.283768677.2	396966.28	3768677	0	0	0	0	0	0	0.000163542	0.000163542	0	0	2.21796E-09	1.33938E-08	1.56118E-08	0.0156118
397066.283768677.2	397066.28	3768677	0	0	0	0	0	0	0.000211902	0.000211902	0	0	2.87383E-09	1.73544E-08	2.02283E-08	0.0202283
397166.283768677.2	397166.28	3768677	0	0	0	0	0	0	0.000267852	0.000267852	0	0	3.63263E-09	2.19367E-08	2.55693E-08	0.0255693
397366.283768677.2	397366.28	3768677	0	0	0	0	0	0	0.000349181	0.000349181	0	0	4.73561E-09	2.85973E-08	3.3333E-08	0.033333
397466.283768677.2	397466.28	3768677	0	0	0	0	0	0	0.000328263	0.000328263	0	0	4.45192E-09	2.68842E-08	3.13361E-08	0.0313361
397566.283768677.2	397566.28	3768677	0	0	0	0	0	0	0.000280092	0.000280092	0	0	3.79862E-09	2.2939E-08	2.67377E-08	0.0267377
397666.283768677.2	397666.28	3768677	0	0	0	0	0	0	0.00022619	0.00022619	0	0	3.0676E-09	1.85246E-08	2.15922E-08	0.0215922
397766.283768677.2	397766.28	3768677	0	0	0	0	0	0	0.000176741	0.000176741	0	0	2.39698E-09	1.44748E-08	1.68718E-08	0.0168718
397866.283768677.2	397866.28	3768677	0	0	0	0	0	0	0.000139789	0.000139789	0	0	1.89582E-09	1.14485E-08	1.33443E-08	0.0133443
396166.283768777.2	396166.28	3768777	0	0	0	0	0	0	3.25375E-05	3.25375E-05	0	0	4.41276E-10	2.66477E-09	3.10604E-09	0.003106
396266.283768777.2	396266.28	3768777	0	0	0	0	0	0	3.69525E-05	3.69525E-05	0	0	5.01151E-10	3.02634E-09	3.5275E-09	0.0035275
396366.283768777.2	396366.28	3768777	0	0	0	0	0	0	4.29399E-05	4.29399E-05	0	0	5.82353E-10	3.5167E-09	4.09905E-09	0.0040991
396466.283768777.2	396466.28	3768777	0	0	0	0	0	0	4.98117E-05	4.98117E-05	0	0	6.7555E-10	4.0795E-09	4.75505E-09	0.004755
396566.283768777.2	396566.28	3768777	0	0	0	0	0	0	5.82712E-05	5.82712E-05	0	0	7.90277E-10	4.77231E-09	5.56259E-09	0.0055626
396666.283768777.2	396666.28	3768777	0	0	0	0	0	0	6.96865E-05	6.96865E-05	0	0	9.45093E-10	5.70721E-09	6.6523E-09	0.0066523
396766.283768777.2	396766.28	3768777	0	0	0	0	0	0	8.48213E-05	8.48213E-05	0	0	1.15035E-09	6.94672E-09	8.09707E-09	0.0080971
396866.283768777.2	396866.28	3768777	0	0	0	0	0	0	0.000104341	0.000104341	0	0	1.41508E-09	8.54533E-09	9.96041E-09	0.0099604
396966.283768777.2	396966.28	3768777	0	0	0	0	0	0	0.000128706	0.000128706	0	0	1.74552E-09	1.05408E-08	1.22863E-08	0.0122863
397066.283768777.2	397066.28	3768777	0	0	0	0	0	0	0.000158923	0.000158923	0	0	2.15532E-09	1.30155E-08	1.51708E-08	0.0151708
397166.283768777.2	397166.28	3768777	0	0	0	0	0	0	0.000191876	0.000191876	0	0	2.60223E-09	1.57143E-08	1.83166E-08	0.0183166
397266.283768777.2	397266.28	3768777	0	0	0	0	0	0	0.000225774	0.000225774	0	0	3.06197E-09	1.84905E-08	2.15525E-08	0.0215525
397366.283768777.2	397366.28	3768777	0	0	0	0	0	0	0.00024193	0.00024193	0	0	3.28107E-09	1.98136E-08	2.30947E-08	0.0230947
397466.283768777.2	397466.28	3768777	0	0	0	0	0	0	0.000234415	0.000234415	0	0	3.17915E-09	1.91982E-08	2.23774E-08	0.0223774
397566.283768777.2	397566.28	3768777	0	0	0	0	0	0	0.000210405	0.000210405	0	0	2.85353E-09	1.72318E-08	2.00854E-08	0.0200854
397666.283768777.2	397666.28	3768777	0	0	0	0	0	0	0.000179848	0.000179848	0	0	2.43911E-09	1.47293E-08	1.71684E-08	0.0171684
397766.283768777.2	397766.28	3768777	0	0	0	0	0	0	0.000149465	0.000149465	0	0	2.02706E-09	1.2241E-08	1.4268E-08	0.014268
397866.283768777.2	397866.28	3768777	0	0	0	0	0	0	0.000123686	0.000123686	0	0	1.67744E-09	1.01297E-08	1.18072E-08	0.0118072
396166.283768877.2	396166.28	3768877	0	0	0	0	0	0	3.02998E-05	3.02998E-05	0	0	4.10928E-10	2.4815E-09	2.89243E-09	0.0028924
396266.283768877.2	396266.28	3768877	0	0	0	0	0	0	3.44199E-05	3.44199E-05	0	0	4.66805E-10	2.81893E-09	3.28574E-09	0.0032857
396366.283768877.2	396366.28	3768877	0	0	0	0	0	0	3.89709E-05	3.89709E-05	0	0	5.28526E-10	3.19165E-09	3.72018E-09	0.0037202
396466.283768877.2	396466.28	3768877	0	0	0	0	0	0	4.53666E-05	4.53666E-05	0	0	6.15264E-10	3.71544E-09	4.33071E-09	0.0043307
396566.283768877.2	396566.28	3768877	0	0	0	0	0	0	5.24728E-05	5.24728E-05	0	0	7.11639E-10	4.29743E-09	5.00907E-09	0.0050091
396666.283768877.2	396666.28	3768877	0	0	0	0	0	0	6.12347E-05	6.12347E-05	0	0	8.30468E-10	5.01501E-09	5.84548E-09	0.0058455
396766.283768877.2	396766.28	3768877	0	0	0	0	0	0	7.29448E-05	7.29448E-05	0	0	9.89282E-10	5.97406E-09	6.96334E-09	0.0069633
396866.283768877.2	396866.28	3768877	0	0	0	0	0	0	8.8828E-05	8.8828E-05	0	0	1.20469E-09	7.27486E-09	8.47956E-09	0.0084796
396966.283768877.2	396966.28	3768877	0	0	0	0	0	0	0.000105838	0.000105838	0	0	1.43538E-09	8.66792E-09	1.01033E-08	0.0101033
397066.283768877.2	397066.28	3768877	0	0	0	0	0	0	0.000124435	0.000124435	0	0	1.68759E-09	1.0191E-08	1.18786E-08	0.0118786
397166.283768877.2	397166.28	3768877	0	0	0	0	0	0	0.000145512	0.000145512	0	0	1.97344E-09	1.19172E-08	1.38906E-08	0.0138906
397266.283768877.2	397266.28	3768877	0	0	0	0	0	0	0.000166271	0.000166271	0	0	2.25498E-09	1.36173E-08	1.58723E-08	0.0158723
397366.283768877.2	397366.28	3768877	0	0	0	0	0	0	0.000176787	0.000176787	0	0	2.39759E-09	1.44785E-08	1.68761E-08	0.0168761
397466.283768877.2	397466.28	3768877	0	0	0	0	0	0	0.000176053	0.000176053	0	0	2.38765E-09	1.44185E-08	1.68061E-08	0.0168061
397566.283768877.2	397566.28	3768877	0	0	0	0	0	0	0.000164275	0.000164275	0	0	2.22791E-09	1.34539E-08	1.56818E-08	0.0156818
397666.283768877.2	397666.28	3768877	0	0	0	0	0	0	0.000144793	0.000144793	0	0	1.9637E-09	1.18583E-08	1.3822E-08	0.013822
397766.283768877.2	397766.28	3768877	0	0	0	0	0	0	0.000125055	0.000125055	0	0	1.696E-09	1.02418E-08	1.19378E-08	0.0119378
397866.283768877.2	397866.28	3768877	0	0	0	0	0	0	0.000107531	0.000107531	0	0	1.45834E-09	8.80661E-09	1.0265E-08	0.010265
3964253767739	396425	3767739	0	0	0	0	0	0	6.19226E-05	6.19226E-05	0	0	8.39798E-10	5.07135E-09	5.91115E-09	0.0059112
3964753767739	396475	3767739	0	0	0	0	0	0	6.8356E-05	6.8356E-05	0	0	9.27048E-10	5.59824E-09	6.52529E-09	0.0065253
3965253767739	396525	3767739	0	0	0	0	0	0	7.4865E-05	7.4865E-05	0	0	1.01532E-09	6.13132E-09	7.14664E-09	0.0071466
3965753767739	396575	3767739	0	0	0	0	0	0	8.34228E-05	8.34228E-05	0	0	1.13138E-09	6.83218E-09	7.96357E-09	0.0079636
3966253767739	396625	3767739	0	0	0	0	0	0	9.06424E-05	9.06424E-05	0	0	1.2293E-09	7.42346E-09	8.65276E-09	0.0086528
3966753767739	396675	3767739	0	0	0	0	0	0	0.000101219	0.000101219	0	0	1.37273E-09	8.28963E-09	9.66236E-09	0.0096624
3967253767739	396725	3767739	0	0	0	0	0	0	0.000116542	0.000116542	0	0	1.58055E-09	9.54462E-09	1.11252E-08	0.0111252
3967753767739	396775	3767739	0	0	0	0	0	0	0.000129508	0.000129508	0	0	1.75639E-09	1.06064E-08	1.23628E-08	0.0123628
3968253767739	396825	3767739	0	0	0	0	0	0	0.000147833	0.000147833	0	0	2.00491E-09	1.21072E-08	1.41121E-08	0.0141121
3968753767739	396875	3767739	0	0	0	0	0	0	0.00016804	0.00016804	0	0	2.27897E-09	1.37622E-08	1.60412E-08	0.0160412
3969253767739	396925	3767739	0	0	0	0	0	0	0.00018666	0.00018666	0	0	2.53149E-09	1.52871E-08	1.78186E-08	0.0178186
3969753767739	396975	3767739	0	0	0	0	0	0	0.000204168	0.000204168	0	0	2.76894E-09	1.6721E-08	1.949E-08	0.01949
3970253767739	397025	3767739	0	0	0	0	0	0	0.000218441	0.000218441	0	0	2.96251E-09	1.789E-08	2.08525E-08	0.0208525
3970753767739	397075	3767739	0	0	0	0	0	0	0.00022771	0.00022771	0	0	3.08821E-09	1.8649E-08	2.17373E-08	0.0217373
3971253767739	397125	3767739	0	0	0	0	0	0	0.000233062	0.000233062	0	0	3.1608E-09	1.90874E-08	2.22482E-08	0.0222482
3971753767739	397175	3767739	0	0	0	0	0	0	0.000236139	0.000236139	0	0	3.20253E-09	1.93394E-08	2.25419E-08	0.0225419
3972253767739	397225	3767739	0	0	0	0	0	0	0.000235262	0.000235262	0	0	3.19064E-09	1.92676E-08	2.24582E-08	0.0224582
3972753767739	397275	3767739	0	0	0	0	0	0	0.000233501	0.000233501	0	0	3.16675E-09	1.91233E-08	2.229E-08	0.02229
3973253767739	397325	3767739	0	0	0	0	0	0	0.000220997	0.000220997	0	0	2.99717E-09	1.80992E-08	2.10964E-08	0.0210964

Garvey Reservoir Rehab - Mitigated I/O Tower			Demolition - 2025	Demolition - 2026	ite Preparation - 202	te Preparation - 202	Grading - 2025	Grading - 2026	nfrastructure - 202	nfrastructure - 202	Paving - 2025	itectural Coating -	Child Risk			
Unique Identifier	X (UTM)	Y (UTM)	1900	1900	1900	1900	1900	1900	2025	2026	1900	1900	3rd Trimester	0<2	Total	per million
3973753767739	397375	3767739	0	0	0	0	0	0	0.000205302	0.000205302	0	0	2.78432E-09	1.68139E-08	1.95982E-08	0.0195982
3974253767739	397425	3767739	0	0	0	0	0	0	0.000189669	0.000189669	0	0	2.5723E-09	1.55335E-08	1.81058E-08	0.0181058
3974753767739	397475	3767739	0	0	0	0	0	0	0.00017758	0.00017758	0	0	2.40836E-09	1.45435E-08	1.69519E-08	0.0169519
3975253767739	397525	3767739	0	0	0	0	0	0	0.000160042	0.000160042	0	0	2.17049E-09	1.31071E-08	1.52776E-08	0.0152776
3964253767789	396425	3767789	0	0	0	0	0	0	6.38428E-05	6.38428E-05	0	0	8.6584E-10	5.22862E-09	6.09446E-09	0.0060945
3964753767789	396475	3767789	0	0	0	0	0	0	7.02989E-05	7.02989E-05	0	0	9.53398E-10	5.75736E-09	6.71076E-09	0.0067108
3965253767789	396525	3767789	0	0	0	0	0	0	7.73976E-05	7.73976E-05	0	0	1.04967E-09	6.33873E-09	7.3884E-09	0.0073884
3965753767789	396575	3767789	0	0	0	0	0	0	8.56E-05	8.56E-05	0	0	1.16091E-09	7.01049E-09	8.17141E-09	0.0081714
3966253767789	396625	3767789	0	0	0	0	0	0	9.60855E-05	9.60855E-05	0	0	1.30312E-09	7.86924E-09	9.17235E-09	0.0091724
3966753767789	396675	3767789	0	0	0	0	0	0	0.000109323	0.000109323	0	0	1.48264E-09	8.95335E-09	1.0436E-08	0.010436
3967253767789	396725	3767789	0	0	0	0	0	0	0.000127224	0.000127224	0	0	1.72542E-09	1.04195E-08	1.21449E-08	0.0121449
3967753767789	396775	3767789	0	0	0	0	0	0	0.000145383	0.000145383	0	0	1.97169E-09	1.19066E-08	1.38783E-08	0.0138783
3968253767789	396825	3767789	0	0	0	0	0	0	0.000168546	0.000168546	0	0	2.28584E-09	1.38037E-08	1.60895E-08	0.0160895
3968753767789	396875	3767789	0	0	0	0	0	0	0.000194144	0.000194144	0	0	2.63299E-09	1.59001E-08	1.85331E-08	0.0185331
3969253767789	396925	3767789	0	0	0	0	0	0	0.000221034	0.000221034	0	0	2.99768E-09	1.81023E-08	2.11E-08	0.0211
3969753767789	396975	3767789	0	0	0	0	0	0	0.000249822	0.000249822	0	0	3.3881E-09	2.046E-08	2.38481E-08	0.0238481
3970253767789	397025	3767789	0	0	0	0	0	0	0.000274853	0.000274853	0	0	3.72757E-09	2.251E-08	2.62375E-08	0.0262375
3970753767789	397075	3767789	0	0	0	0	0	0	0.000293072	0.000293072	0	0	3.97466E-09	2.40021E-08	2.79768E-08	0.0279768
3971253767789	397125	3767789	0	0	0	0	0	0	0.000304177	0.000304177	0	0	4.12527E-09	2.49116E-08	2.90369E-08	0.0290369
3971753767789	397175	3767789	0	0	0	0	0	0	0.000309469	0.000309469	0	0	4.19704E-09	2.5345E-08	2.95421E-08	0.0295421
3972253767789	397225	3767789	0	0	0	0	0	0	0.000307602	0.000307602	0	0	4.17172E-09	2.51921E-08	2.93638E-08	0.0293638
3972753767789	397275	3767789	0	0	0	0	0	0	0.00030479	0.00030479	0	0	4.13358E-09	2.49618E-08	2.90953E-08	0.0290953
3973253767789	397325	3767789	0	0	0	0	0	0	0.000287954	0.000287954	0	0	3.90525E-09	2.35829E-08	2.74882E-08	0.0274882
3973753767789	397375	3767789	0	0	0	0	0	0	0.000261948	0.000261948	0	0	3.55256E-09	2.14531E-08	2.50057E-08	0.0250057
3974253767789	397425	3767789	0	0	0	0	0	0	0.000235776	0.000235776	0	0	3.19761E-09	1.93097E-08	2.25073E-08	0.0225073
3974753767789	397475	3767789	0	0	0	0	0	0	0.000216302	0.000216302	0	0	2.9335E-09	1.77148E-08	2.06483E-08	0.0206483
3975253767789	397525	3767789	0	0	0	0	0	0	0.000190485	0.000190485	0	0	2.58337E-09	1.56004E-08	1.81838E-08	0.0181838
3964253767839	396425	3767839	0	0	0	0	0	0	6.55589E-05	6.55589E-05	0	0	8.89113E-10	5.36916E-09	6.25827E-09	0.0062583
3964753767839	396475	3767839	0	0	0	0	0	0	7.27558E-05	7.27558E-05	0	0	9.86719E-10	5.95858E-09	6.9453E-09	0.0069453
3965253767839	396525	3767839	0	0	0	0	0	0	7.96202E-05	7.96202E-05	0	0	1.07981E-09	6.52076E-09	7.60057E-09	0.0076006
3965753767839	396575	3767839	0	0	0	0	0	0	8.9395E-05	8.9395E-05	0	0	1.21238E-09	7.3213E-09	8.53368E-09	0.0085337
3966253767839	396625	3767839	0	0	0	0	0	0	0.000101362	0.000101362	0	0	1.37468E-09	8.30139E-09	9.67608E-09	0.0096761
3966753767839	396675	3767839	0	0	0	0	0	0	0.000119324	0.000119324	0	0	1.61828E-09	9.77247E-09	1.13907E-08	0.0113907
3967253767839	396725	3767839	0	0	0	0	0	0	0.000138632	0.000138632	0	0	1.88014E-09	1.13537E-08	1.32339E-08	0.0132339
3967753767839	396775	3767839	0	0	0	0	0	0	0.000161599	0.000161599	0	0	2.19161E-09	1.32347E-08	1.54263E-08	0.0154263
3968253767839	396825	3767839	0	0	0	0	0	0	0.000189835	0.000189835	0	0	2.57455E-09	1.55472E-08	1.81217E-08	0.0181217
3968753767839	396875	3767839	0	0	0	0	0	0	0.000223627	0.000223627	0	0	3.03285E-09	1.83147E-08	2.13476E-08	0.0213476
3969253767839	396925	3767839	0	0	0	0	0	0	0.000262183	0.000262183	0	0	3.55574E-09	2.14723E-08	2.5028E-08	0.025028
3969753767839	396975	3767839	0	0	0	0	0	0	0.000306869	0.000306869	0	0	4.16177E-09	2.5132E-08	2.92938E-08	0.0292938
3970253767839	397025	3767839	0	0	0	0	0	0	0.000351358	0.000351358	0	0	4.76514E-09	2.87757E-08	3.35408E-08	0.0335408
3970753767839	397075	3767839	0	0	0	0	0	0	0.000383903	0.000383903	0	0	5.20652E-09	3.1441E-08	3.66476E-08	0.0366476
3971253767839	397125	3767839	0	0	0	0	0	0	0.000405819	0.000405819	0	0	5.50375E-09	3.32359E-08	3.87397E-08	0.0387397
3971753767839	397175	3767839	0	0	0	0	0	0	0.000425309	0.000425309	0	0	5.76806E-09	3.48321E-08	4.06001E-08	0.0406001
3972253767839	397225	3767839	0	0	0	0	0	0	0.000433284	0.000433284	0	0	5.87623E-09	3.54852E-08	4.13615E-08	0.0413615
3972753767839	397275	3767839	0	0	0	0	0	0	0.000420841	0.000420841	0	0	5.70747E-09	3.44661E-08	4.01736E-08	0.0401736
3973253767839	397325	3767839	0	0	0	0	0	0	0.000391448	0.000391448	0	0	5.30884E-09	3.20589E-08	3.73678E-08	0.0373678
3973753767839	397375	3767839	0	0	0	0	0	0	0.000346618	0.000346618	0	0	4.70086E-09	2.83875E-08	3.30883E-08	0.0330883
3974753767839	397475	3767839	0	0	0	0	0	0	0.000261336	0.000261336	0	0	3.54425E-09	2.1403E-08	2.49472E-08	0.0249472
3975253767839	397525	3767839	0	0	0	0	0	0	0.000228889	0.000228889	0	0	3.10421E-09	1.87456E-08	2.18498E-08	0.0218498
3964253767889	396425	3767889	0	0	0	0	0	0	6.69499E-05	6.69499E-05	0	0	9.07978E-10	5.48308E-09	6.39106E-09	0.0063911
3964753767889	396475	3767889	0	0	0	0	0	0	7.32548E-05	7.32548E-05	0	0	9.93486E-10	5.99944E-09	6.99293E-09	0.0069929
3965253767889	396525	3767889	0	0	0	0	0	0	8.20771E-05	8.20771E-05	0	0	1.11313E-09	6.72198E-09	7.83511E-09	0.0078351
3965753767889	396575	3767889	0	0	0	0	0	0	9.35983E-05	9.35983E-05	0	0	1.26939E-09	7.66554E-09	8.93493E-09	0.0089349
3974753767889	397475	3767889	0	0	0	0	0	0	0.000332134	0.000332134	0	0	4.50442E-09	2.72012E-08	3.17056E-08	0.0317056
3975253767889	397525	3767889	0	0	0	0	0	0	0.000276675	0.000276675	0	0	3.75228E-09	2.26592E-08	2.64115E-08	0.0264115
3964253767939	396425	3767939	0	0	0	0	0	0	6.80461E-05	6.80461E-05	0	0	9.22845E-10	5.57286E-09	6.4957E-09	0.0064957
3964753767939	396475	3767939	0	0	0	0	0	0	7.47365E-05	7.47365E-05	0	0	1.01358E-09	6.12079E-09	7.13437E-09	0.0071344
3965253767939	396525	3767939	0	0	0	0	0	0	8.44131E-05	8.44131E-05	0	0	1.14482E-09	6.91329E-09	8.0581E-09	0.0080581
3974753767939	397475	3767939	0	0	0	0	0	0	0.000421703	0.000421703	0	0	5.71915E-09	3.45367E-08	4.02559E-08	0.0402559
3975253767939	397525	3767939	0	0	0	0	0	0	0.000334341	0.000334341	0	0	4.53435E-09	2.7382E-08	3.19163E-08	0.0319163
3964253767989	396425	3767989	0	0	0	0	0	0	6.80461E-05	6.80461E-05	0	0	9.22845E-10	5.57286E-09	6.4957E-09	0.0064957
3964753767989	396475	3767989	0	0	0	0	0	0	7.5999E-05	7.5999E-05	0	0	1.0307E-09	6.22419E-09	7.25489E-09	0.0072549
3974753767989	397475	3767989	0	0	0	0	0	0	0.000526036	0.000526036	0	0	7.13413E-09	4.30814E-08	5.02156E-08	0.0502156
3975253767989	397525	3767989	0	0	0	0	0	0	0.000396884	0.000396884	0	0	5.38256E-09	3.25041E-08	3.78867E-08	0.0378867
3964253768039	396425	3768039	0	0	0	0	0	0	6.85374E-05	6.85374E-05	0	0	9.29509E-10	5.6131E-09	6.54261E-09	0.0065426
3964753768039	396475	3768039	0	0	0	0	0	0	7.70423E-05	7.70423E-05	0	0	1.04485E-09	6.30963E-09	7.35448E-09	0.0073545
3974753768039	397475	3768039	0	0	0	0	0	0	0.000659467	0.000659467	0	0	8.94373E-09	5.40092E-08	6.29529E-08	0.0629529
3975253768039	397525	3768039	0	0	0	0	0	0	0.00047097	0.00047097	0	0	6.38732E-09	3.85716E-08	4.4959E-08	0.044959
3964253768089	396425	3768089	0	0	0	0	0	0	6.89003E-05	6.89003E-05	0	0	9.3443E-10	5.64282E-09	6.57725E-09	0.0065772

Garvey Reservoir Rehab - Mitigated I/O Tower			Demolition - 2025	Demolition - 2026	ite Preparation - 202	te Preparation - 202	Grading - 2025	Grading - 2026	nfrastructure - 202	nfrastructure - 202	Paving - 2025	itectural Coating -	Child Risk			
Unique Identifier	X (UTM)	Y (UTM)	1900	1900	1900	1900	1900	1900	2025	2026	1900	1900	3rd Trimester	0<2	Total	per million
3964753768089	396475	3768089	0	0	0	0	0	0	7.77151E-05	7.77151E-05	0	0	1.05398E-09	6.36473E-09	7.41871E-09	0.0074187
3974753768089	397475	3768089	0	0	0	0	0	0	0.000799044	0.000799044	0	0	1.08367E-08	6.54404E-08	7.6277E-08	0.076277
3975253768089	397525	3768089	0	0	0	0	0	0	0.000539016	0.000539016	0	0	7.31017E-09	4.41445E-08	5.14547E-08	0.0514547
3964253768139	396425	3768139	0	0	0	0	0	0	6.97546E-05	6.97546E-05	0	0	9.46016E-10	5.71278E-09	6.6588E-09	0.0066588
3964753768139	396475	3768139	0	0	0	0	0	0	7.75488E-05	7.75488E-05	0	0	1.05172E-09	6.35111E-09	7.40283E-09	0.0074028
3974253768139	397425	3768139	0	0	0	0	0	0	0.001537814	0.001537814	0	0	2.08559E-08	1.25944E-07	1.468E-07	0.1468002
3974753768139	397475	3768139	0	0	0	0	0	0	0.000921128	0.000921128	0	0	1.24924E-08	7.54388E-08	8.79312E-08	0.0879312
3975253768139	397525	3768139	0	0	0	0	0	0	0.00060862	0.00060862	0	0	8.25413E-09	4.98449E-08	5.8099E-08	0.058099
3964253768189	396425	3768189	0	0	0	0	0	0	6.91271E-05	6.91271E-05	0	0	9.37506E-10	5.66139E-09	6.5989E-09	0.0065989
3964753768189	396475	3768189	0	0	0	0	0	0	7.69515E-05	7.69515E-05	0	0	1.04362E-09	6.3022E-09	7.34582E-09	0.0073458
3973753768189	397375	3768189	0	0	0	0	0	0	0.00334187	0.00334187	0	0	4.53226E-08	2.73693E-07	3.19016E-07	0.319016
3974253768189	397425	3768189	0	0	0	0	0	0	0.001664562	0.001664562	0	0	2.25749E-08	1.36325E-07	1.589E-07	0.1588997
3974753768189	397475	3768189	0	0	0	0	0	0	0.001035138	0.001035138	0	0	1.40386E-08	8.4776E-08	9.88146E-08	0.0988146
3975253768189	397525	3768189	0	0	0	0	0	0	0.000680816	0.000680816	0	0	9.23326E-09	5.57577E-08	6.49909E-08	0.0649909
3964253768239	396425	3768239	0	0	0	0	0	0	6.81595E-05	6.81595E-05	0	0	9.24382E-10	5.58214E-09	6.50653E-09	0.0065065
3964753768239	396475	3768239	0	0	0	0	0	0	7.59234E-05	7.59234E-05	0	0	1.02968E-09	6.218E-09	7.24767E-09	0.0072477
3973753768239	397375	3768239	0	0	0	0	0	0	0.003115785	0.003115785	0	0	4.22565E-08	2.55177E-07	2.97434E-07	0.297434
3974253768239	397425	3768239	0	0	0	0	0	0	0.00162321	0.00162321	0	0	2.20141E-08	1.32938E-07	1.54952E-07	0.1549522
3974753768239	397475	3768239	0	0	0	0	0	0	0.001016026	0.001016026	0	0	1.37794E-08	8.32108E-08	9.69902E-08	0.0969902
3975253768239	397525	3768239	0	0	0	0	0	0	0.000691362	0.000691362	0	0	9.37629E-09	5.66214E-08	6.59976E-08	0.0659976
3964253768289	396425	3768289	0	0	0	0	0	0	6.67231E-05	6.67231E-05	0	0	9.04902E-10	5.46451E-09	6.36941E-09	0.0063694
3964753768289	396475	3768289	0	0	0	0	0	0	7.45022E-05	7.45022E-05	0	0	1.0104E-09	6.1016E-09	7.112E-09	0.007112
3973253768289	397325	3768289	0	0	0	0	0	0	0.003551595	0.003551595	0	0	4.81669E-08	2.9087E-07	3.39036E-07	0.3390365
3973753768289	397375	3768289	0	0	0	0	0	0	0.002456832	0.002456832	0	0	3.33197E-08	2.0121E-07	2.3453E-07	0.2345301
3974253768289	397425	3768289	0	0	0	0	0	0	0.001644226	0.001644226	0	0	2.22991E-08	1.34659E-07	1.56958E-07	0.1569584
3974753768289	397475	3768289	0	0	0	0	0	0	0.001096614	0.001096614	0	0	1.48723E-08	8.98108E-08	1.04683E-07	0.1046832
3975253768289	397525	3768289	0	0	0	0	0	0	0.000749883	0.000749883	0	0	1.01699E-08	6.14141E-08	7.1584E-08	0.071584
3964253768339	396425	3768339	0	0	0	0	0	0	6.54228E-05	6.54228E-05	0	0	8.87268E-10	5.35802E-09	6.24528E-09	0.0062453
3964753768339	396475	3768339	0	0	0	0	0	0	7.27785E-05	7.27785E-05	0	0	9.87026E-10	5.96044E-09	6.94746E-09	0.0069475
3965253768339	396525	3768339	0	0	0	0	0	0	8.23039E-05	8.23039E-05	0	0	1.11621E-09	6.74055E-09	7.85676E-09	0.0078568
3972753768339	397275	3768339	0	0	0	0	0	0	0.002556327	0.002556327	0	0	3.46691E-08	2.09359E-07	2.44028E-07	0.2440279
3973253768339	397325	3768339	0	0	0	0	0	0	0.002333101	0.002333101	0	0	3.16416E-08	1.91077E-07	2.22719E-07	0.2227186
3973753768339	397375	3768339	0	0	0	0	0	0	0.001842097	0.001842097	0	0	2.49826E-08	1.50865E-07	1.75847E-07	0.1758472
3974253768339	397425	3768339	0	0	0	0	0	0	0.001382013	0.001382013	0	0	1.87429E-08	1.13185E-07	1.31927E-07	0.1319275
3974753768339	397475	3768339	0	0	0	0	0	0	0.001011082	0.001011082	0	0	1.37124E-08	8.28059E-08	9.65183E-08	0.0965183
3975253768339	397525	3768339	0	0	0	0	0	0	0.000743275	0.000743275	0	0	1.00803E-08	6.0873E-08	7.09533E-08	0.0709533
3964253768389	396425	3768389	0	0	0	0	0	0	6.3616E-05	6.3616E-05	0	0	8.62764E-10	5.21004E-09	6.07281E-09	0.0060728
3964753768389	396475	3768389	0	0	0	0	0	0	7.06844E-05	7.06844E-05	0	0	9.58626E-10	5.78894E-09	6.74756E-09	0.0067476
3965253768389	396525	3768389	0	0	0	0	0	0	7.95521E-05	7.95521E-05	0	0	1.07889E-09	6.51518E-09	7.59407E-09	0.0075941
3972253768389	397225	3768389	0	0	0	0	0	0	0.001514635	0.001514635	0	0	2.05416E-08	1.24046E-07	1.44588E-07	0.1445876
3972753768389	397275	3768389	0	0	0	0	0	0	0.0016571	0.0016571	0	0	2.24737E-08	1.35714E-07	1.58187E-07	0.1581874
3973253768389	397325	3768389	0	0	0	0	0	0	0.00159923	0.00159923	0	0	2.16888E-08	1.30974E-07	1.52663E-07	0.152663
3973753768389	397375	3768389	0	0	0	0	0	0	0.001375156	0.001375156	0	0	1.86499E-08	1.12623E-07	1.31273E-07	0.1312729
3974253768389	397425	3768389	0	0	0	0	0	0	0.001109126	0.001109126	0	0	1.5042E-08	9.08355E-08	1.05878E-07	0.1058775
3974753768389	397475	3768389	0	0	0	0	0	0	0.000868965	0.000868965	0	0	1.1785E-08	7.11668E-08	8.29517E-08	0.0829517
3975253768389	397525	3768389	0	0	0	0	0	0	0.000672001	0.000672001	0	0	9.11372E-09	5.50357E-08	6.41495E-08	0.0641495
3964253768439	396425	3768439	0	0	0	0	0	0	6.20209E-05	6.20209E-05	0	0	8.41131E-10	5.0794E-09	5.92053E-09	0.0059205
3964753768439	396475	3768439	0	0	0	0	0	0	6.83863E-05	6.83863E-05	0	0	9.27458E-10	5.60072E-09	6.52818E-09	0.0065282
3965253768439	396525	3768439	0	0	0	0	0	0	7.65055E-05	7.65055E-05	0	0	1.03757E-09	6.26567E-09	7.30324E-09	0.0073032
3971753768439	397175	3768439	0	0	0	0	0	0	0.000833026	0.000833026	0	0	1.12975E-08	6.82234E-08	7.95209E-08	0.0795209
3972253768439	397225	3768439	0	0	0	0	0	0	0.001046878	0.001046878	0	0	1.41978E-08	8.57375E-08	9.99354E-08	0.0999354
3972753768439	397275	3768439	0	0	0	0	0	0	0.001142261	0.001142261	0	0	1.54914E-08	9.35492E-08	1.09041E-07	0.1090406
3973253768439	397325	3768439	0	0	0	0	0	0	0.001151559	0.001151559	0	0	1.56175E-08	9.43107E-08	1.09928E-07	0.1099282
3973753768439	397375	3768439	0	0	0	0	0	0	0.001060713	0.001060713	0	0	1.43854E-08	8.68706E-08	1.01256E-07	0.101256
3974253768439	397425	3768439	0	0	0	0	0	0	0.00091536	0.00091536	0	0	1.24142E-08	7.49664E-08	8.73806E-08	0.0873806
3974753768439	397475	3768439	0	0	0	0	0	0	0.000739775	0.000739775	0	0	1.00329E-08	6.05863E-08	7.06192E-08	0.0706192
3975253768439	397525	3768439	0	0	0	0	0	0	0.000596667	0.000596667	0	0	8.09204E-09	4.8866E-08	5.69581E-08	0.0569581
3964253768489	396425	3768489	0	0	0	0	0	0	5.98058E-05	5.98058E-05	0	0	8.1109E-10	4.898E-09	5.70909E-09	0.0057091
3964753768489	396475	3768489	0	0	0	0	0	0	6.57857E-05	6.57857E-05	0	0	8.92189E-10	5.38773E-09	6.27992E-09	0.0062799
3965253768489	396525	3768489	0	0	0	0	0	0	7.33379E-05	7.33379E-05	0	0	9.94613E-10	6.00625E-09	7.00087E-09	0.0070009
3970753768489	397075	3768489	0	0	0	0	0	0	0.000415473	0.000415473	0	0	5.63467E-09	3.40266E-08	3.96612E-08	0.0396612
3971253768489	397125	3768489	0	0	0	0	0	0	0.000507605	0.000507605	0	0	6.88417E-09	4.1572E-08	4.84562E-08	0.0484562
3971753768489	397175	3768489	0	0	0	0	0	0	0.000620005	0.000620005	0	0	8.40854E-09	5.07773E-08	5.91859E-08	0.0591859
3972253768489	397225	3768489	0	0	0	0	0	0	0.000740962	0.000740962	0	0	1.0049E-08	6.06835E-08	7.07325E-08	0.0707325
3972753768489	397275	3768489	0	0	0	0	0	0	0.000831226	0.000831226	0	0	1.12731E-08	6.8076E-08	7.93492E-08	0.0793492
3973253768489	397325	3768489	0	0	0	0	0	0	0.000853898	0.000853898	0	0	1.15806E-08	6.99328E-08	8.15134E-08	0.0815134
3973753768489	397375	3768489	0	0	0	0	0	0	0.000810951	0.000810951	0	0	1.09982E-08	6.64155E-08	7.74137E-08	0.0774137
3974253768489	397425	3768489	0	0	0	0	0	0	0.000730068	0.000730068	0	0	9.90123E-09	5.97913E-08	6.96926E-08	0.0696926
3974753768489	397475	3768489	0	0	0	0	0	0	0.000633091	0.000633091	0	0	8.58601E-09	5.1849E-08	6.04351E-08	0.0604351

Garvey Reservoir Rehab - Mitigated I/O Tower			Demolition - 2025	Demolition - 2026	ite Preparation - 202	te Preparation - 202	Grading - 2025	Grading - 2026	nfrastructure - 202	nfrastructure - 202	Paving - 2025	itectural Coating -	Child Risk			
Unique Identifier	X (UTM)	Y (UTM)	1900	1900	1900	1900	1900	1900	2025	2026	1900	1900	3rd Trimester	0<2	Total	per million
3975253768489	397525	3768489	0	0	0	0	0	0	0.000534458	0.000534458	0	0	7.24834E-09	4.37712E-08	5.10195E-08	0.0510195
3964253768539	396425	3768539	0	0	0	0	0	0	5.75228E-05	5.75228E-05	0	0	7.80127E-10	4.71102E-09	5.49114E-09	0.0054911
3964753768539	396475	3768539	0	0	0	0	0	0	6.31775E-05	6.31775E-05	0	0	8.56817E-10	5.17413E-09	6.03095E-09	0.0060309
3965253768539	396525	3768539	0	0	0	0	0	0	6.99889E-05	6.99889E-05	0	0	9.49194E-10	5.73197E-09	6.68117E-09	0.0066812
3965753768539	396575	3768539	0	0	0	0	0	0	7.85693E-05	7.85693E-05	0	0	1.06556E-09	6.4347E-09	7.50026E-09	0.0075003
3970253768539	397025	3768539	0	0	0	0	0	0	0.000287304	0.000287304	0	0	3.89643E-09	2.35297E-08	2.74261E-08	0.0274261
3970753768539	397075	3768539	0	0	0	0	0	0	0.000343557	0.000343557	0	0	4.65933E-09	2.81367E-08	3.2796E-08	0.032796
3971253768539	397125	3768539	0	0	0	0	0	0	0.00040836	0.00040836	0	0	5.53819E-09	3.34439E-08	3.89821E-08	0.0389821
3971753768539	397175	3768539	0	0	0	0	0	0	0.000484737	0.000484737	0	0	6.57402E-09	3.96991E-08	4.62731E-08	0.0462731
3972253768539	397225	3768539	0	0	0	0	0	0	0.000557833	0.000557833	0	0	7.56536E-09	4.56855E-08	5.32509E-08	0.0532509
3972753768539	397275	3768539	0	0	0	0	0	0	0.000629485	0.000629485	0	0	8.53711E-09	5.15537E-08	6.00908E-08	0.0600908
3973253768539	397325	3768539	0	0	0	0	0	0	0.000650826	0.000650826	0	0	8.82654E-09	5.33015E-08	6.21281E-08	0.0621281
3973753768539	397375	3768539	0	0	0	0	0	0	0.000632342	0.000632342	0	0	8.57586E-09	5.17878E-08	6.03636E-08	0.0603636
3974253768539	397425	3768539	0	0	0	0	0	0	0.000587535	0.000587535	0	0	7.96818E-09	4.81181E-08	5.60863E-08	0.0560863
3974753768539	397475	3768539	0	0	0	0	0	0	0.000526376	0.000526376	0	0	7.13874E-09	4.31093E-08	5.0248E-08	0.050248
3975253768539	397525	3768539	0	0	0	0	0	0	0.000459419	0.000459419	0	0	6.23066E-09	3.76256E-08	4.38563E-08	0.0438563
3964253768589	396425	3768589	0	0	0	0	0	0	5.53229E-05	5.53229E-05	0	0	7.50292E-10	4.53085E-09	5.28114E-09	0.0052811
3964753768589	396475	3768589	0	0	0	0	0	0	6.04635E-05	6.04635E-05	0	0	8.2001E-10	4.95186E-09	5.77187E-09	0.0057719
3965253768589	396525	3768589	0	0	0	0	0	0	6.6897E-05	6.6897E-05	0	0	9.0726E-10	5.47875E-09	6.38601E-09	0.006386
3965753768589	396575	3768589	0	0	0	0	0	0	7.43056E-05	7.43056E-05	0	0	1.00774E-09	6.0855E-09	7.09324E-09	0.0070932
3966253768589	396625	3768589	0	0	0	0	0	0	8.29541E-05	8.29541E-05	0	0	1.12503E-09	6.7938E-09	7.91882E-09	0.0079188
3968253768589	396825	3768589	0	0	0	0	0	0	0.000136765	0.000136765	0	0	1.85481E-09	1.12008E-08	1.30556E-08	0.0130556
3968753768589	396875	3768589	0	0	0	0	0	0	0.000157993	0.000157993	0	0	2.14271E-09	1.29394E-08	1.50821E-08	0.0150821
3969253768589	396925	3768589	0	0	0	0	0	0	0.00018161	0.00018161	0	0	2.463E-09	1.48735E-08	1.73365E-08	0.0173365
3969753768589	396975	3768589	0	0	0	0	0	0	0.000213248	0.000213248	0	0	2.89208E-09	1.74646E-08	2.03567E-08	0.0203567
3970253768589	397025	3768589	0	0	0	0	0	0	0.000249406	0.000249406	0	0	3.38246E-09	2.0426E-08	2.38084E-08	0.0238084
3970753768589	397075	3768589	0	0	0	0	0	0	0.000288589	0.000288589	0	0	3.91386E-09	2.3635E-08	2.75488E-08	0.0275488
3971253768589	397125	3768589	0	0	0	0	0	0	0.000338688	0.000338688	0	0	4.59331E-09	2.7738E-08	3.23313E-08	0.0323313
3971753768589	397175	3768589	0	0	0	0	0	0	0.000390889	0.000390889	0	0	5.30126E-09	3.20131E-08	3.73144E-08	0.0373144
3972253768589	397225	3768589	0	0	0	0	0	0	0.000438183	0.000438183	0	0	5.94266E-09	3.58864E-08	4.18291E-08	0.0418291
3972753768589	397275	3768589	0	0	0	0	0	0	0.000475703	0.000475703	0	0	6.4515E-09	3.89592E-08	4.54107E-08	0.0454107
3973253768589	397325	3768589	0	0	0	0	0	0	0.000508255	0.000508255	0	0	6.89299E-09	4.16252E-08	4.85182E-08	0.0485182
3973753768589	397375	3768589	0	0	0	0	0	0	0.000502049	0.000502049	0	0	6.80881E-09	4.11169E-08	4.79257E-08	0.0479257
3974253768589	397425	3768589	0	0	0	0	0	0	0.000478583	0.000478583	0	0	6.49057E-09	3.91951E-08	4.56857E-08	0.0456857
3974753768589	397475	3768589	0	0	0	0	0	0	0.000439672	0.000439672	0	0	5.96286E-09	3.60084E-08	4.19713E-08	0.0419713
3975253768589	397525	3768589	0	0	0	0	0	0	0.000393739	0.000393739	0	0	5.33991E-09	3.22465E-08	3.75864E-08	0.0375864
3964253768639	396425	3768639	0	0	0	0	0	0	5.30549E-05	5.30549E-05	0	0	7.19534E-10	4.34511E-09	5.06464E-09	0.0050646
3964753768639	396475	3768639	0	0	0	0	0	0	5.76437E-05	5.76437E-05	0	0	7.81768E-10	4.72092E-09	5.50269E-09	0.0055027
3965253768639	396525	3768639	0	0	0	0	0	0	6.35933E-05	6.35933E-05	0	0	8.62456E-10	5.20818E-09	6.07064E-09	0.0060706
3965753768639	396575	3768639	0	0	0	0	0	0	7.01553E-05	7.01553E-05	0	0	9.5145E-10	5.7456E-09	6.69704E-09	0.006697
3966253768639	396625	3768639	0	0	0	0	0	0	7.77907E-05	7.77907E-05	0	0	1.055E-09	6.37092E-09	7.42593E-09	0.0074259
3966753768639	396675	3768639	0	0	0	0	0	0	8.67718E-05	8.67718E-05	0	0	1.1768E-09	7.10646E-09	8.28326E-09	0.0082833
3967253768639	396725	3768639	0	0	0	0	0	0	9.73707E-05	9.73707E-05	0	0	1.32055E-09	7.97449E-09	9.29504E-09	0.009295
3967753768639	396775	3768639	0	0	0	0	0	0	0.000109731	0.000109731	0	0	1.48818E-09	8.98678E-09	1.0475E-08	0.010475
3968253768639	396825	3768639	0	0	0	0	0	0	0.000124616	0.000124616	0	0	1.69005E-09	1.02059E-08	1.18959E-08	0.0118959
3968753768639	396875	3768639	0	0	0	0	0	0	0.000141792	0.000141792	0	0	1.92299E-09	1.16125E-08	1.35355E-08	0.0135355
3969253768639	396925	3768639	0	0	0	0	0	0	0.000161826	0.000161826	0	0	2.19469E-09	1.32533E-08	1.54479E-08	0.0154479
3969753768639	396975	3768639	0	0	0	0	0	0	0.000186425	0.000186425	0	0	2.52831E-09	1.52679E-08	1.77962E-08	0.0177962
3970253768639	397025	3768639	0	0	0	0	0	0	0.000214072	0.000214072	0	0	2.90325E-09	1.75321E-08	2.04354E-08	0.0204354
3970753768639	397075	3768639	0	0	0	0	0	0	0.000243434	0.000243434	0	0	3.30147E-09	1.99368E-08	2.32383E-08	0.0232383
3971253768639	397125	3768639	0	0	0	0	0	0	0.000273008	0.000273008	0	0	3.70255E-09	2.23589E-08	2.60615E-08	0.0260615
3971753768639	397175	3768639	0	0	0	0	0	0	0.000316462	0.000316462	0	0	4.29188E-09	2.59177E-08	3.02096E-08	0.0302096
3972253768639	397225	3768639	0	0	0	0	0	0	0.000352742	0.000352742	0	0	4.7839E-09	2.8889E-08	3.36729E-08	0.0336729
3972753768639	397275	3768639	0	0	0	0	0	0	0.000383677	0.000383677	0	0	5.20344E-09	3.14225E-08	3.66259E-08	0.0366259
3973253768639	397325	3768639	0	0	0	0	0	0	0.000404927	0.000404927	0	0	5.49165E-09	3.31629E-08	3.86545E-08	0.0386545
3973753768639	397375	3768639	0	0	0	0	0	0	0.000404935	0.000404935	0	0	5.49175E-09	3.31635E-08	3.86552E-08	0.0386552
3974253768639	397425	3768639	0	0	0	0	0	0	0.000393119	0.000393119	0	0	5.3315E-09	3.21958E-08	3.75273E-08	0.0375273
3974753768639	397475	3768639	0	0	0	0	0	0	0.000369971	0.000369971	0	0	5.01756E-09	3.03E-08	3.53175E-08	0.0353175
3975253768639	397525	3768639	0	0	0	0	0	0	0.000338401	0.000338401	0	0	4.58941E-09	2.77144E-08	3.23039E-08	0.0323039
3964253768689	396425	3768689	0	0	0	0	0	0	5.06206E-05	5.06206E-05	0	0	6.8652E-10	4.14574E-09	4.83226E-09	0.0048323
3964753768689	396475	3768689	0	0	0	0	0	0	5.48693E-05	5.48693E-05	0	0	7.4414E-10	4.4937E-09	5.23784E-09	0.0052378
3965253768689	396525	3768689	0	0	0	0	0	0	5.99192E-05	5.99192E-05	0	0	8.12628E-10	4.90728E-09	5.71991E-09	0.0057199
3965753768689	396575	3768689	0	0	0	0	0	0	6.5952E-05	6.5952E-05	0	0	8.94445E-10	5.40136E-09	6.2958E-09	0.0062958
3966253768689	396625	3768689	0	0	0	0	0	0	7.25971E-05	7.25971E-05	0	0	9.84566E-10	5.94558E-09	6.93014E-09	0.0069301
3966753768689	396675	3768689	0	0	0	0	0	0	8.05122E-05	8.05122E-05	0	0	1.09191E-09	6.59381E-09	7.68573E-09	0.0076857
3967253768689	396725	3768689	0	0	0	0	0	0	8.94177E-05	8.94177E-05	0	0	1.21269E-09	7.32316E-09	8.53585E-09	0.0085358
3967753768689	396775	3768689	0	0	0	0	0	0	9.99637E-05	9.99637E-05	0	0	1.35571E-09	8.18685E-09	9.54257E-09	0.0095426
3968253768689	396825	3768689	0	0	0	0	0	0	0.000112294	0.000112294	0	0	1.52293E-09	9.19667E-09	1.07196E-08	0.0107196
3968753768689	396875	3768689	0	0	0	0	0	0	0.000126922	0.000126922	0	0	1.72132E-09	1.03947E-08	1.2116E-08	0.012116

Garvey Reservoir Rehab - Mitigated I/O Tower			Demolition - 2025	Demolition - 2026	ite Preparation - 202	te Preparation - 202	Grading - 2025	Grading - 2026	nfrastructure - 202	nfrastructure - 202	Paving - 2025	itectural Coating -	Child Risk			
Unique Identifier	X (UTM)	Y (UTM)	1900	1900	1900	1900	1900	1900	2025	2026	1900	1900	3rd Trimester	0<2	Total	per million
3969253768689	396925	3768689	0	0	0	0	0	0	0.00014338	0.00014338	0	0	1.94452E-09	1.17426E-08	1.36871E-08	0.0136871
3969753768689	396975	3768689	0	0	0	0	0	0	0.000162332	0.000162332	0	0	2.20156E-09	1.32947E-08	1.54963E-08	0.0154963
3970253768689	397025	3768689	0	0	0	0	0	0	0.000184165	0.000184165	0	0	2.49766E-09	1.50828E-08	1.75805E-08	0.0175805
3970753768689	397075	3768689	0	0	0	0	0	0	0.000209181	0.000209181	0	0	2.83692E-09	1.71315E-08	1.99685E-08	0.0199685
3971253768689	397125	3768689	0	0	0	0	0	0	0.000230454	0.000230454	0	0	3.12543E-09	1.88738E-08	2.19992E-08	0.0219992
3971753768689	397175	3768689	0	0	0	0	0	0	0.000261842	0.000261842	0	0	3.55112E-09	2.14444E-08	2.49956E-08	0.0249956
3972253768689	397225	3768689	0	0	0	0	0	0	0.00029122	0.00029122	0	0	3.94954E-09	2.38504E-08	2.78E-08	0.0278
3972753768689	397275	3768689	0	0	0	0	0	0	0.000313794	0.000313794	0	0	4.25569E-09	2.56992E-08	2.99548E-08	0.0299548
3973253768689	397325	3768689	0	0	0	0	0	0	0.000329495	0.000329495	0	0	4.46863E-09	2.69851E-08	3.14537E-08	0.0314537
3973753768689	397375	3768689	0	0	0	0	0	0	0.000334591	0.000334591	0	0	4.53774E-09	2.74024E-08	3.19401E-08	0.0319401
3974253768689	397425	3768689	0	0	0	0	0	0	0.000328006	0.000328006	0	0	4.44844E-09	2.68631E-08	3.13116E-08	0.0313116
3974753768689	397475	3768689	0	0	0	0	0	0	0.000312947	0.000312947	0	0	4.2442E-09	2.56298E-08	2.9874E-08	0.029874
3975253768689	397525	3768689	0	0	0	0	0	0	0.000291825	0.000291825	0	0	3.95774E-09	2.38999E-08	2.78577E-08	0.0278577

Garvey Reservoir Rehab - Mitigated I/O Tower

Offroad DPM Emissions, Ground Level Concentrations and Health Risk Calculations

Residential Receptors

Phase	Year	Emissions (lbs/day)	Meters	lbs/meter	meters (h1)	lbs/day (H1)	g/s (H1)	meters (h2)	lbs/day (H2)	g/s (H2)	hrs/day
Demolition - 2025	1900		1932.1	0	691.2	0	0	1240.9	0	0	10.00
Demolition - 2026	1900		1932.1	0	691.2	0	0	1240.9	0	0	10.00
Site Preparation - 2025	1900		1932.1	0	691.2	0	0	1240.9	0	0	10.00
Site Preparation - 2026	1900		1932.1	0	691.2	0	0	1240.9	0	0	10.00
Grading - 2025	1900		1932.1	0	691.2	0	0	1240.9	0	0	10.00
Grading - 2026	1900		1932.1	0	691.2	0	0	1240.9	0	0	10.00
Infrastructure - 2025	2025	0.0100	1932.1	5.17572E-06	691.2	0.003577455	4.50749E-05	1240.9	0.006422545	8.09223E-05	10.00
Infrastructure - 2026	2026	0.0100	1932.1	5.17572E-06	691.2	0.003577455	4.50749E-05	1240.9	0.006422545	8.09223E-05	10.00
Paving - 2025	1900		1932.1	0	691.2	0	0	1240.9	0	0	10.00
Architectural Coating - 2026	1900		1932.1	0	691.2	0	0	1240.9	0	0	10.00

		AERMOD Column Identifier:	*5*	*5*	*5*	*5*	*5*	*5*	*5*	*5*	*5*	*5*				
			6	*6*	*6*	*6*	*6*	*6*	*6*	*6*	*6*	*6*			*MAX:*	0.097724
Garvey Reservoir Rehab - Mitigated I/O Tower			Demolition - 2025	Demolition - 2026	Site Preparation - 2025	te Preparation - 202	Grading - 2025	Grading - 2026	Infrastructure - 2025	nfrastructure - 2026	Paving - 2025	rchitectural Coating - 202	Child Risk			
Unique Identifier	X (UTM)	Y (UTM)	1900	1900	1900	1900	1900	1900	2025	2026	1900	1900	3rd Trimester	0<2	Total	per million
396166.283767377.2	396166.28	3767377	0	0	0	0	0	0	3.83011E-06	3.83011E-06	0	0	5.19442E-11	3.1368E-10	3.65624E-10	0.0003656
396266.283767377.2	396266.28	3767377	0	0	0	0	0	0	3.91694E-06	3.91694E-06	0	0	5.31218E-11	3.20791E-10	3.73913E-10	0.0003739
396366.283767377.2	396366.28	3767377	0	0	0	0	0	0	4.07625E-06	4.07625E-06	0	0	5.52823E-11	3.33838E-10	3.8912E-10	0.0003891
396466.283767377.2	396466.28	3767377	0	0	0	0	0	0	4.18245E-06	4.18245E-06	0	0	5.67227E-11	3.42536E-10	3.99258E-10	0.0003993
396566.283767377.2	396566.28	3767377	0	0	0	0	0	0	4.58512E-06	4.58512E-06	0	0	6.21836E-11	3.75513E-10	4.37697E-10	0.0004377
396666.283767377.2	396666.28	3767377	0	0	0	0	0	0	4.33497E-06	4.33497E-06	0	0	5.87912E-11	3.55027E-10	4.13818E-10	0.0004138
396766.283767377.2	396766.28	3767377	0	0	0	0	0	0	4.31797E-06	4.31797E-06	0	0	5.85606E-11	3.53635E-10	4.12195E-10	0.0004122
396866.283767377.2	396866.28	3767377	0	0	0	0	0	0	4.32176E-06	4.32176E-06	0	0	5.86119E-11	3.53944E-10	4.12556E-10	0.0004126
396966.283767377.2	396966.28	3767377	0	0	0	0	0	0	4.37894E-06	4.37894E-06	0	0	5.93874E-11	3.58628E-10	4.18015E-10	0.000418
397066.283767377.2	397066.28	3767377	0	0	0	0	0	0	4.26851E-06	4.26851E-06	0	0	5.78898E-11	3.49584E-10	4.07473E-10	0.0004075
397166.283767377.2	397166.28	3767377	0	0	0	0	0	0	4.21012E-06	4.21012E-06	0	0	5.70979E-11	3.44802E-10	4.019E-10	0.0004019
397266.283767377.2	397266.28	3767377	0	0	0	0	0	0	4.2152E-06	4.2152E-06	0	0	5.71668E-11	3.45218E-10	4.02385E-10	0.0004024
397366.283767377.2	397366.28	3767377	0	0	0	0	0	0	4.02305E-06	4.02305E-06	0	0	5.45609E-11	3.29481E-10	3.84042E-10	0.000384
397466.283767377.2	397466.28	3767377	0	0	0	0	0	0	3.62179E-06	3.62179E-06	0	0	4.91189E-11	2.96618E-10	3.45737E-10	0.0003457
397566.283767377.2	397566.28	3767377	0	0	0	0	0	0	3.56251E-06	3.56251E-06	0	0	4.83149E-11	2.91763E-10	3.40078E-10	0.0003401
397666.283767377.2	397666.28	3767377	0	0	0	0	0	0	3.45794E-06	3.45794E-06	0	0	4.68967E-11	2.83199E-10	3.30096E-10	0.0003301
397766.283767377.2	397766.28	3767377	0	0	0	0	0	0	3.56871E-06	3.56871E-06	0	0	4.83991E-11	2.92272E-10	3.40671E-10	0.0003407
397866.283767377.2	397866.28	3767377	0	0	0	0	0	0	3.39922E-06	3.39922E-06	0	0	4.61004E-11	2.7839E-10	3.24491E-10	0.0003245
396166.283767477.2	396166.28	3767477	0	0	0	0	0	0	4.40759E-06	4.40759E-06	0	0	5.9776E-11	3.60974E-10	4.2075E-10	0.0004208
396266.283767477.2	396266.28	3767477	0	0	0	0	0	0	4.30668E-06	4.30668E-06	0	0	5.84075E-11	3.5271E-10	4.11118E-10	0.0004111
396366.283767477.2	396366.28	3767477	0	0	0	0	0	0	4.53722E-06	4.53722E-06	0	0	6.1534E-11	3.7159E-10	4.33124E-10	0.0004331
396466.283767477.2	396466.28	3767477	0	0	0	0	0	0	4.96939E-06	4.96939E-06	0	0	6.73951E-11	4.06985E-10	4.7438E-10	0.0004744
396566.283767477.2	396566.28	3767477	0	0	0	0	0	0	5.03692E-06	5.03692E-06	0	0	6.83109E-11	4.12515E-10	4.80826E-10	0.0004808
396666.283767477.2	396666.28	3767477	0	0	0	0	0	0	4.89066E-06	4.89066E-06	0	0	6.63274E-11	4.00537E-10	4.66864E-10	0.0004669
396766.283767477.2	396766.28	3767477	0	0	0	0	0	0	4.92892E-06	4.92892E-06	0	0	6.68462E-11	4.0367E-10	4.70516E-10	0.0004705
396866.283767477.2	396866.28	3767477	0	0	0	0	0	0	4.9577E-06	4.9577E-06	0	0	6.72366E-11	4.06027E-10	4.73263E-10	0.0004733
396966.283767477.2	396966.28	3767477	0	0	0	0	0	0	5.0315E-06	5.0315E-06	0	0	6.82375E-11	4.12071E-10	4.80309E-10	0.0004803
397066.283767477.2	397066.28	3767477	0	0	0	0	0	0	4.93481E-06	4.93481E-06	0	0	6.69261E-11	4.04152E-10	4.71078E-10	0.0004711
397166.283767477.2	397166.28	3767477	0	0	0	0	0	0	4.77938E-06	4.77938E-06	0	0	6.48183E-11	3.91423E-10	4.56242E-10	0.0004562
397266.283767477.2	397266.28	3767477	0	0	0	0	0	0	4.79518E-06	4.79518E-06	0	0	6.50325E-11	3.92717E-10	4.57749E-10	0.0004577
397366.283767477.2	397366.28	3767477	0	0	0	0	0	0	4.65093E-06	4.65093E-06	0	0	6.30761E-11	3.80903E-10	4.43979E-10	0.000444
397466.283767477.2	397466.28	3767477	0	0	0	0	0	0	4.19494E-06	4.19494E-06	0	0	5.6892E-11	3.43558E-10	4.0045E-10	0.0004005
397566.283767477.2	397566.28	3767477	0	0	0	0	0	0	3.9783E-06	3.9783E-06	0	0	5.3954E-11	3.25816E-10	3.7977E-10	0.0003798
397666.283767477.2	397666.28	3767477	0	0	0	0	0	0	3.89105E-06	3.89105E-06	0	0	5.27707E-11	3.18671E-10	3.71441E-10	0.0003714
397766.283767477.2	397766.28	3767477	0	0	0	0	0	0	3.79864E-06	3.79864E-06	0	0	5.15174E-11	3.11102E-10	3.62619E-10	0.0003626
397866.283767477.2	397866.28	3767477	0	0	0	0	0	0	3.65582E-06	3.65582E-06	0	0	4.95804E-11	2.99405E-10	3.48985E-10	0.000349
396166.283767577.2	396166.28	3767577	0	0	0	0	0	0	4.64617E-06	4.64617E-06	0	0	6.30116E-11	3.80513E-10	4.43525E-10	0.0004435
396266.283767577.2	396266.28	3767577	0	0	0	0	0	0	4.77621E-06	4.77621E-06	0	0	6.47752E-11	3.91163E-10	4.55939E-10	0.0004559
396366.283767577.2	396366.28	3767577	0	0	0	0	0	0	4.99528E-06	4.99528E-06	0	0	6.77463E-11	4.09105E-10	4.76851E-10	0.0004769
396466.283767577.2	396466.28	3767577	0	0	0	0	0	0	5.30423E-06	5.30423E-06	0	0	7.19363E-11	4.34407E-10	5.06344E-10	0.0005063
396566.283767577.2	396566.28	3767577	0	0	0	0	0	0	5.89209E-06	5.89209E-06	0	0	7.99089E-11	4.82552E-10	5.62461E-10	0.0005625
396666.283767577.2	396666.28	3767577	0	0	0	0	0	0	5.9828E-06	5.9828E-06	0	0	8.1139E-11	4.89981E-10	5.7112E-10	0.0005711
396766.283767577.2	396766.28	3767577	0	0	0	0	0	0	5.64161E-06	5.64161E-06	0	0	7.65119E-11	4.62038E-10	5.3855E-10	0.0005386
396866.283767577.2	396866.28	3767577	0	0	0	0	0	0	5.78386E-06	5.78386E-06	0	0	7.8441E-11	4.73688E-10	5.52129E-10	0.0005521

Garvey Reservoir Rehab - Mitigated I/O Tower			Demolition - 2025	Demolition - 2026	Site Preparation - 2025	ite Preparation - 202	Grading - 2025	Grading - 2026	Infrastructure - 2025	nfrastructure - 2026	Paving - 2025	rchitectural Coating - 202	Child Risk			
Unique Identifier	X (UTM)	Y (UTM)	1900	1900	1900	1900	1900	1900	2025	2026	1900	1900	3rd Trimester	0<2	Total	per million
396966.283767577.2	396966.28	3767577	0	0	0	0	0	0	5.86296E-06	5.86296E-06	0	0	7.95138E-11	4.80166E-10	5.5968E-10	0.0005597
397066.283767577.2	397066.28	3767577	0	0	0	0	0	0	5.86437E-06	5.86437E-06	0	0	7.95329E-11	4.80282E-10	5.59815E-10	0.0005598
397166.283767577.2	397166.28	3767577	0	0	0	0	0	0	5.64799E-06	5.64799E-06	0	0	7.65984E-11	4.62561E-10	5.39159E-10	0.0005392
397266.283767577.2	397266.28	3767577	0	0	0	0	0	0	5.57311E-06	5.57311E-06	0	0	7.55828E-11	4.56428E-10	5.32011E-10	0.000532
397366.283767577.2	397366.28	3767577	0	0	0	0	0	0	5.43422E-06	5.43422E-06	0	0	7.36991E-11	4.45053E-10	5.18752E-10	0.0005188
397466.283767577.2	397466.28	3767577	0	0	0	0	0	0	4.84076E-06	4.84076E-06	0	0	6.56506E-11	3.9645E-10	4.621E-10	0.0004621
397566.283767577.2	397566.28	3767577	0	0	0	0	0	0	4.56601E-06	4.56601E-06	0	0	6.19244E-11	3.73948E-10	4.35873E-10	0.0004359
397666.283767577.2	397666.28	3767577	0	0	0	0	0	0	4.31766E-06	4.31766E-06	0	0	5.85564E-11	3.53609E-10	4.12165E-10	0.0004122
397766.283767577.2	397766.28	3767577	0	0	0	0	0	0	4.15353E-06	4.15353E-06	0	0	5.63304E-11	3.40167E-10	3.96497E-10	0.0003965
397866.283767577.2	397866.28	3767577	0	0	0	0	0	0	3.94844E-06	3.94844E-06	0	0	5.3549E-11	3.23371E-10	3.7692E-10	0.0003769
396166.283767677.2	396166.28	3767677	0	0	0	0	0	0	5.62549E-06	5.62549E-06	0	0	7.62932E-11	4.60718E-10	5.37011E-10	0.000537
396266.283767677.2	396266.28	3767677	0	0	0	0	0	0	5.32253E-06	5.32253E-06	0	0	7.21845E-11	4.35906E-10	5.08091E-10	0.0005081
396366.283767677.2	396366.28	3767677	0	0	0	0	0	0	5.67165E-06	5.67165E-06	0	0	7.69192E-11	4.64498E-10	5.41417E-10	0.0005414
396466.283767677.2	396466.28	3767677	0	0	0	0	0	0	6.70851E-06	6.70851E-06	0	0	9.09811E-11	5.49415E-10	6.40396E-10	0.0006404
396566.283767677.2	396566.28	3767677	0	0	0	0	0	0	6.76935E-06	6.76935E-06	0	0	9.18063E-11	5.54398E-10	6.46205E-10	0.0006462
396666.283767677.2	396666.28	3767677	0	0	0	0	0	0	6.34121E-06	6.34121E-06	0	0	8.59999E-11	5.19335E-10	6.05334E-10	0.0006053
396766.283767677.2	396766.28	3767677	0	0	0	0	0	0	6.60139E-06	6.60139E-06	0	0	8.95284E-11	5.40643E-10	6.30171E-10	0.0006302
396866.283767677.2	396866.28	3767677	0	0	0	0	0	0	6.97234E-06	6.97234E-06	0	0	9.45593E-11	5.71023E-10	6.65582E-10	0.0006656
396966.283767677.2	396966.28	3767677	0	0	0	0	0	0	7.04825E-06	7.04825E-06	0	0	9.55887E-11	5.77239E-10	6.72828E-10	0.0006728
397066.283767677.2	397066.28	3767677	0	0	0	0	0	0	7.02703E-06	7.02703E-06	0	0	9.5301E-11	5.75502E-10	6.70803E-10	0.0006708
397166.283767677.2	397166.28	3767677	0	0	0	0	0	0	6.87159E-06	6.87159E-06	0	0	9.31929E-11	5.62772E-10	6.55964E-10	0.000656
397266.283767677.2	397266.28	3767677	0	0	0	0	0	0	6.30158E-06	6.30158E-06	0	0	8.54624E-11	5.16089E-10	6.01551E-10	0.0006016
397366.283767677.2	397366.28	3767677	0	0	0	0	0	0	6.41003E-06	6.41003E-06	0	0	8.69332E-11	5.24971E-10	6.11904E-10	0.0006119
397466.283767677.2	397466.28	3767677	0	0	0	0	0	0	5.51298E-06	5.51298E-06	0	0	7.47673E-11	4.51503E-10	5.26271E-10	0.0005263
397566.283767677.2	397566.28	3767677	0	0	0	0	0	0	5.28934E-06	5.28934E-06	0	0	7.17343E-11	4.33188E-10	5.04922E-10	0.0005049
397666.283767677.2	397666.28	3767677	0	0	0	0	0	0	4.98117E-06	4.98117E-06	0	0	6.75549E-11	4.07949E-10	4.75504E-10	0.0004755
397766.283767677.2	397766.28	3767677	0	0	0	0	0	0	4.64986E-06	4.64986E-06	0	0	6.30616E-11	3.80815E-10	4.43877E-10	0.0004439
397866.283767677.2	397866.28	3767677	0	0	0	0	0	0	4.42501E-06	4.42501E-06	0	0	6.00123E-11	3.62401E-10	4.22413E-10	0.0004224
396166.283767777.2	396166.28	3767777	0	0	0	0	0	0	6.31355E-06	6.31355E-06	0	0	8.56247E-11	5.17069E-10	6.02694E-10	0.0006027
396266.283767777.2	396266.28	3767777	0	0	0	0	0	0	7.17219E-06	7.17219E-06	0	0	9.72697E-11	5.8739E-10	6.8466E-10	0.0006847
396366.283767777.2	396366.28	3767777	0	0	0	0	0	0	6.98034E-06	6.98034E-06	0	0	9.46677E-11	5.71678E-10	6.66346E-10	0.0006663
396466.283767777.2	396466.28	3767777	0	0	0	0	0	0	7.36938E-06	7.36938E-06	0	0	9.9944E-11	6.0354E-10	7.03484E-10	0.0007035
396566.283767777.2	396566.28	3767777	0	0	0	0	0	0	6.97725E-06	6.97725E-06	0	0	9.46258E-11	5.71425E-10	6.66051E-10	0.0006661
396666.283767777.2	396666.28	3767777	0	0	0	0	0	0	7.33794E-06	7.33794E-06	0	0	9.95176E-11	6.00965E-10	7.00483E-10	0.0007005
396766.283767777.2	396766.28	3767777	0	0	0	0	0	0	8.04307E-06	8.04307E-06	0	0	1.09081E-10	6.58714E-10	7.67794E-10	0.0007678
396866.283767777.2	396866.28	3767777	0	0	0	0	0	0	8.58934E-06	8.58934E-06	0	0	1.16489E-10	7.03452E-10	8.19941E-10	0.0008199
396966.283767777.2	396966.28	3767777	0	0	0	0	0	0	8.48403E-06	8.48403E-06	0	0	1.15061E-10	6.94828E-10	8.09888E-10	0.0008099
397066.283767777.2	397066.28	3767777	0	0	0	0	0	0	8.49567E-06	8.49567E-06	0	0	1.15219E-10	6.95781E-10	8.10999E-10	0.000811
397166.283767777.2	397166.28	3767777	0	0	0	0	0	0	8.50727E-06	8.50727E-06	0	0	1.15376E-10	6.96731E-10	8.12107E-10	0.0008121
397266.283767777.2	397266.28	3767777	0	0	0	0	0	0	7.91515E-06	7.91515E-06	0	0	1.07346E-10	6.48237E-10	7.55583E-10	0.0007556
397366.283767777.2	397366.28	3767777	0	0	0	0	0	0	7.76167E-06	7.76167E-06	0	0	1.05264E-10	6.35667E-10	7.40931E-10	0.0007409
397466.283767777.2	397466.28	3767777	0	0	0	0	0	0	6.69808E-06	6.69808E-06	0	0	9.08398E-11	5.48561E-10	6.39401E-10	0.0006394
397566.283767777.2	397566.28	3767777	0	0	0	0	0	0	6.17864E-06	6.17864E-06	0	0	8.37951E-11	5.0602E-10	5.89815E-10	0.0005898
397666.283767777.2	397666.28	3767777	0	0	0	0	0	0	5.88008E-06	5.88008E-06	0	0	7.9746E-11	4.81569E-10	5.61315E-10	0.0005613
397766.283767777.2	397766.28	3767777	0	0	0	0	0	0	5.25012E-06	5.25012E-06	0	0	7.12025E-11	4.29976E-10	5.01179E-10	0.0005012
397866.283767777.2	397866.28	3767777	0	0	0	0	0	0	4.7865E-06	4.7865E-06	0	0	6.49148E-11	3.92007E-10	4.56921E-10	0.0004569
396166.283767877.2	396166.28	3767877	0	0	0	0	0	0	6.97761E-06	6.97761E-06	0	0	9.46308E-11	5.71455E-10	6.66086E-10	0.0006661
396266.283767877.2	396266.28	3767877	0	0	0	0	0	0	8.05927E-06	8.05927E-06	0	0	1.093E-10	6.6004E-10	7.6934E-10	0.0007693
396366.283767877.2	396366.28	3767877	0	0	0	0	0	0	8.5193E-06	8.5193E-06	0	0	1.15539E-10	6.97716E-10	8.13255E-10	0.0008133
396466.283767877.2	396466.28	3767877	0	0	0	0	0	0	8.08394E-06	8.08394E-06	0	0	1.09635E-10	6.62061E-10	7.71696E-10	0.0007717
396566.283767877.2	396566.28	3767877	0	0	0	0	0	0	8.00101E-06	8.00101E-06	0	0	1.0851E-10	6.55269E-10	7.63779E-10	0.0007638
397466.283767877.2	397466.28	3767877	0	0	0	0	0	0	9.38054E-06	9.38054E-06	0	0	1.27219E-10	7.6825E-10	8.95469E-10	0.0008955
397566.283767877.2	397566.28	3767877	0	0	0	0	0	0	7.38854E-06	7.38854E-06	0	0	1.00204E-10	6.05109E-10	7.05313E-10	0.0007053
397666.283767877.2	397666.28	3767877	0	0	0	0	0	0	6.22835E-06	6.22835E-06	0	0	8.44692E-11	5.10091E-10	5.9456E-10	0.0005946
397766.283767877.2	397766.28	3767877	0	0	0	0	0	0	5.51313E-06	5.51313E-06	0	0	7.47694E-11	4.51516E-10	5.26286E-10	0.0005263
397866.283767877.2	397866.28	3767877	0	0	0	0	0	0	5.52227E-06	5.52227E-06	0	0	7.48934E-11	4.52265E-10	5.27158E-10	0.0005272
396166.283767977.2	396166.28	3767977	0	0	0	0	0	0	7.31371E-06	7.31371E-06	0	0	9.91889E-11	5.9898E-10	6.98169E-10	0.0006982
396266.283767977.2	396266.28	3767977	0	0	0	0	0	0	8.45174E-06	8.45174E-06	0	0	1.14623E-10	6.92183E-10	8.06806E-10	0.0008068
396366.283767977.2	396366.28	3767977	0	0	0	0	0	0	9.14145E-06	9.14145E-06	0	0	1.23977E-10	7.48669E-10	8.72646E-10	0.0008726
396466.283767977.2	396466.28	3767977	0	0	0	0	0	0	8.78313E-06	8.78313E-06	0	0	1.19117E-10	7.19323E-10	8.3844E-10	0.0008384
397466.283767977.2	397466.28	3767977	0	0	0	0	0	0	1.10631E-05	1.10631E-05	0	0	1.50039E-10	9.06051E-10	1.05609E-09	0.0010561
397566.283767977.2	397566.28	3767977	0	0	0	0	0	0	8.93416E-06	8.93416E-06	0	0	1.21166E-10	7.31692E-10	8.52858E-10	0.0008529
397666.283767977.2	397666.28	3767977	0	0	0	0	0	0	7.41573E-06	7.41573E-06	0	0	1.00573E-10	6.07336E-10	7.07908E-10	0.0007079
397766.283767977.2	397766.28	3767977	0	0	0	0	0	0	7.47003E-06	7.47003E-06	0	0	1.01309E-10	6.11783E-10	7.13092E-10	0.0007131
397866.283767977.2	397866.28	3767977	0	0	0	0	0	0	6.83119E-06	6.83119E-06	0	0	9.2645E-11	5.59463E-10	6.52108E-10	0.0006521
396166.283768077.2	396166.28	3768077	0	0	0	0	0	0	9.85953E-06	9.85953E-06	0	0	1.33715E-10	8.07478E-10	9.41194E-10	0.0009412
396266.283768077.2	396266.28	3768077	0	0	0	0	0	0	9.34415E-06	9.34415E-06	0	0	1.26726E-10	7.6527E-10	8.91996E-10	0.000892
396366.283768077.2	396366.28	3768077	0	0	0	0	0	0	1.014E-05	1.014E-05	0	0	1.3752E-10	8.30452E-10	9.67972E-10	0.000968
396466.283768077.2	396466.28	3768077	0	0	0	0	0	0	1.09769E-05	1.09769E-05	0	0	1.48869E-10	8.98988E-10	1.04786E-09	0.0010479
397466.283768077.2	397466.28	3768077	0	0	0	0	0	0	1.91987E-05	1.91987E-05	0	0	2.60374E-10	1.57234E-09	1.83271E-09	0.0018327
397566.283768077.2	397566.28	3768077	0	0	0	0	0	0	1.51719E-05	1.51719E-05	0	0	2.05763E-10	1.24256E-09	1.44832E-09	0.0014483

Garvey Reservoir Rehab - Mitigated I/O Tower			Demolition - 2025	Demolition - 2026	Site Preparation - 2025	ite Preparation - 202	Grading - 2025	Grading - 2026	Infrastructure - 2025	nfrastructure - 2026	Paving - 2025	rchitectural Coating - 202	Child Risk			
Unique Identifier	X (UTM)	Y (UTM)	1900	1900	1900	1900	1900	1900	2025	2026	1900	1900	3rd Trimester	0<2	Total	per million
397666.283768077.2	397666.28	3768077	0	0	0	0	0	0	1.13827E-05	1.13827E-05	0	0	1.54373E-10	9.32224E-10	1.0866E-09	0.0010866
397766.283768077.2	397766.28	3768077	0	0	0	0	0	0	8.88752E-06	8.88752E-06	0	0	1.20533E-10	7.27873E-10	8.48406E-10	0.0008484
397866.283768077.2	397866.28	3768077	0	0	0	0	0	0	7.70344E-06	7.70344E-06	0	0	1.04474E-10	6.30898E-10	7.35373E-10	0.0007354
396166.283768177.2	396166.28	3768177	0	0	0	0	0	0	1.18911E-05	1.18911E-05	0	0	1.61267E-10	9.73857E-10	1.13512E-09	0.0011351
396266.283768177.2	396266.28	3768177	0	0	0	0	0	0	1.22816E-05	1.22816E-05	0	0	1.66564E-10	1.00584E-09	1.17241E-09	0.0011724
396366.283768177.2	396366.28	3768177	0	0	0	0	0	0	1.337E-05	1.337E-05	0	0	1.81325E-10	1.09498E-09	1.2763E-09	0.0012763
396466.283768177.2	396466.28	3768177	0	0	0	0	0	0	1.31649E-05	1.31649E-05	0	0	1.78543E-10	1.07818E-09	1.25672E-09	0.0012567
397466.283768177.2	397466.28	3768177	0	0	0	0	0	0	4.19871E-05	4.19871E-05	0	0	5.69432E-10	3.43867E-09	4.0081E-09	0.0040081
397566.283768177.2	397566.28	3768177	0	0	0	0	0	0	2.20253E-05	2.20253E-05	0	0	2.98708E-10	1.80383E-09	2.10254E-09	0.0021025
397666.283768177.2	397666.28	3768177	0	0	0	0	0	0	1.50304E-05	1.50304E-05	0	0	2.03843E-10	1.23096E-09	1.43481E-09	0.0014348
397766.283768177.2	397766.28	3768177	0	0	0	0	0	0	1.10837E-05	1.10837E-05	0	0	1.50318E-10	9.0774E-10	1.05806E-09	0.0010581
397866.283768177.2	397866.28	3768177	0	0	0	0	0	0	9.09468E-06	9.09468E-06	0	0	1.23343E-10	7.44839E-10	8.68181E-10	0.0008682
396166.283768277.2	396166.28	3768277	0	0	0	0	0	0	1.41424E-05	1.41424E-05	0	0	1.918E-10	1.15824E-09	1.35004E-09	0.00135
396266.283768277.2	396266.28	3768277	0	0	0	0	0	0	1.39172E-05	1.39172E-05	0	0	1.88746E-10	1.13979E-09	1.32854E-09	0.0013285
396366.283768277.2	396366.28	3768277	0	0	0	0	0	0	1.56228E-05	1.56228E-05	0	0	2.11877E-10	1.27948E-09	1.49136E-09	0.0014914
396466.283768277.2	396466.28	3768277	0	0	0	0	0	0	1.61667E-05	1.61667E-05	0	0	2.19254E-10	1.32403E-09	1.54328E-09	0.0015433
397366.283768277.2	397366.28	3768277	0	0	0	0	0	0	0.000333703	0.000333703	0	0	4.5257E-09	2.73297E-08	3.18554E-08	0.0318554
397466.283768277.2	397466.28	3768277	0	0	0	0	0	0	6.55061E-05	6.55061E-05	0	0	8.88398E-10	5.36484E-09	6.25324E-09	0.0062532
397566.283768277.2	397566.28	3768277	0	0	0	0	0	0	2.99056E-05	2.99056E-05	0	0	4.05581E-10	2.44921E-09	2.8548E-09	0.0028548
397666.283768277.2	397666.28	3768277	0	0	0	0	0	0	1.87384E-05	1.87384E-05	0	0	2.54131E-10	1.53464E-09	1.78877E-09	0.0017888
397766.283768277.2	397766.28	3768277	0	0	0	0	0	0	1.3423E-05	1.3423E-05	0	0	1.82044E-10	1.09932E-09	1.28137E-09	0.0012814
397866.283768277.2	397866.28	3768277	0	0	0	0	0	0	1.03337E-05	1.03337E-05	0	0	1.40146E-10	8.46309E-10	9.86455E-10	0.0009865
396166.283768377.2	396166.28	3768377	0	0	0	0	0	0	1.6667E-05	1.6667E-05	0	0	2.26038E-10	1.365E-09	1.59104E-09	0.001591
396266.283768377.2	396266.28	3768377	0	0	0	0	0	0	1.73546E-05	1.73546E-05	0	0	2.35364E-10	1.42131E-09	1.65668E-09	0.0016567
396366.283768377.2	396366.28	3768377	0	0	0	0	0	0	1.93763E-05	1.93763E-05	0	0	2.62783E-10	1.58689E-09	1.84967E-09	0.0018497
396466.283768377.2	396466.28	3768377	0	0	0	0	0	0	2.09048E-05	2.09048E-05	0	0	2.83512E-10	1.71207E-09	1.99558E-09	0.0019956
397266.283768377.2	397266.28	3768377	0	0	0	0	0	0	0.000523875	0.000523875	0	0	7.10482E-09	4.29044E-08	5.00093E-08	0.0500093
397366.283768377.2	397366.28	3768377	0	0	0	0	0	0	0.000235623	0.000235623	0	0	3.19553E-09	1.92971E-08	2.24926E-08	0.0224926
397466.283768377.2	397466.28	3768377	0	0	0	0	0	0	7.603E-05	7.603E-05	0	0	1.03112E-09	6.22672E-09	7.25785E-09	0.0072578
397566.283768377.2	397566.28	3768377	0	0	0	0	0	0	3.65004E-05	3.65004E-05	0	0	4.95021E-10	2.98932E-09	3.48434E-09	0.0034843
397666.283768377.2	397666.28	3768377	0	0	0	0	0	0	2.21244E-05	2.21244E-05	0	0	3.00052E-10	1.81195E-09	2.112E-09	0.002112
397766.283768377.2	397766.28	3768377	0	0	0	0	0	0	1.55538E-05	1.55538E-05	0	0	2.10942E-10	1.27383E-09	1.48477E-09	0.0014848
397866.283768377.2	397866.28	3768377	0	0	0	0	0	0	1.11884E-05	1.11884E-05	0	0	1.51738E-10	9.16313E-10	1.06805E-09	0.0010681
396166.283768477.2	396166.28	3768477	0	0	0	0	0	0	2.04481E-05	2.04481E-05	0	0	2.77319E-10	1.67467E-09	1.95199E-09	0.001952
396266.283768477.2	396266.28	3768477	0	0	0	0	0	0	2.20367E-05	2.20367E-05	0	0	2.98864E-10	1.80477E-09	2.10364E-09	0.0021036
396366.283768477.2	396366.28	3768477	0	0	0	0	0	0	2.44257E-05	2.44257E-05	0	0	3.31263E-10	2.00042E-09	2.33169E-09	0.0023317
396466.283768477.2	396466.28	3768477	0	0	0	0	0	0	2.73511E-05	2.73511E-05	0	0	3.70938E-10	2.24001E-09	2.61095E-09	0.0026109
397166.283768477.2	397166.28	3768477	0	0	0	0	0	0	9.73672E-05	9.73672E-05	0	0	1.3205E-09	7.97421E-09	9.29471E-09	0.0092947
397266.283768477.2	397266.28	3768477	0	0	0	0	0	0	0.000531762	0.000531762	0	0	7.21178E-09	4.35504E-08	5.07622E-08	0.0507622
397366.283768477.2	397366.28	3768477	0	0	0	0	0	0	0.000215441	0.000215441	0	0	2.92182E-09	1.76442E-08	2.05661E-08	0.0205661
397466.283768477.2	397466.28	3768477	0	0	0	0	0	0	7.00666E-05	7.00666E-05	0	0	9.50247E-10	5.73833E-09	6.68858E-09	0.0066886
397566.283768477.2	397566.28	3768477	0	0	0	0	0	0	4.18824E-05	4.18824E-05	0	0	5.68011E-10	3.4301E-09	3.99811E-09	0.0039981
397666.283768477.2	397666.28	3768477	0	0	0	0	0	0	2.59892E-05	2.59892E-05	0	0	3.52467E-10	2.12847E-09	2.48094E-09	0.0024809
397766.283768477.2	397766.28	3768477	0	0	0	0	0	0	1.64422E-05	1.64422E-05	0	0	2.22991E-10	1.34659E-09	1.56958E-09	0.0015696
397866.283768477.2	397866.28	3768477	0	0	0	0	0	0	1.28178E-05	1.28178E-05	0	0	1.73836E-10	1.04976E-09	1.22359E-09	0.0012236
396166.283768577.2	396166.28	3768577	0	0	0	0	0	0	2.60193E-05	2.60193E-05	0	0	3.52875E-10	2.13093E-09	2.48381E-09	0.0024838
396266.283768577.2	396266.28	3768577	0	0	0	0	0	0	2.93301E-05	2.93301E-05	0	0	3.97777E-10	2.40209E-09	2.79986E-09	0.0027999
396366.283768577.2	396366.28	3768577	0	0	0	0	0	0	3.16434E-05	3.16434E-05	0	0	4.2915E-10	2.59154E-09	3.02069E-09	0.0030207
396466.283768577.2	396466.28	3768577	0	0	0	0	0	0	3.79976E-05	3.79976E-05	0	0	5.15326E-10	3.11194E-09	3.62726E-09	0.0036273
396566.283768577.2	396566.28	3768577	0	0	0	0	0	0	3.72132E-05	3.72132E-05	0	0	5.04687E-10	3.04769E-09	3.55238E-09	0.0035524
396866.283768577.2	396866.28	3768577	0	0	0	0	0	0	4.76217E-05	4.76217E-05	0	0	6.45848E-10	3.90014E-09	4.54599E-09	0.004546
396966.283768577.2	396966.28	3768577	0	0	0	0	0	0	5.52952E-05	5.52952E-05	0	0	7.49917E-10	4.52858E-09	5.2785E-09	0.0052785
397066.283768577.2	397066.28	3768577	0	0	0	0	0	0	6.83391E-05	6.83391E-05	0	0	9.26819E-10	5.59686E-09	6.52368E-09	0.0065237
397166.283768577.2	397166.28	3768577	0	0	0	0	0	0	0.000117007	0.000117007	0	0	1.58685E-09	9.58265E-09	1.11695E-08	0.0111695
397266.283768577.2	397266.28	3768577	0	0	0	0	0	0	0.000515848	0.000515848	0	0	6.99596E-09	4.22471E-08	4.9243E-08	0.049243
397366.283768577.2	397366.28	3768577	0	0	0	0	0	0	0.000216068	0.000216068	0	0	2.93032E-09	1.76956E-08	2.06259E-08	0.0206259
397466.283768577.2	397466.28	3768577	0	0	0	0	0	0	6.92328E-05	6.92328E-05	0	0	9.38939E-10	5.67005E-09	6.60898E-09	0.006609
397566.283768577.2	397566.28	3768577	0	0	0	0	0	0	4.14429E-05	4.14429E-05	0	0	5.62051E-10	3.3941E-09	3.95615E-09	0.0039562
397666.283768577.2	397666.28	3768577	0	0	0	0	0	0	2.75516E-05	2.75516E-05	0	0	3.73657E-10	2.25643E-09	2.63009E-09	0.0026301
397766.283768577.2	397766.28	3768577	0	0	0	0	0	0	1.96067E-05	1.96067E-05	0	0	2.65907E-10	1.60575E-09	1.87166E-09	0.0018717
397866.283768577.2	397866.28	3768577	0	0	0	0	0	0	1.43156E-05	1.43156E-05	0	0	1.94149E-10	1.17242E-09	1.36657E-09	0.0013666
396166.283768677.2	396166.28	3768677	0	0	0	0	0	0	4.57094E-05	4.57094E-05	0	0	6.19913E-10	3.74352E-09	4.36343E-09	0.0043634
396266.283768677.2	396266.28	3768677	0	0	0	0	0	0	5.21859E-05	5.21859E-05	0	0	7.07749E-10	4.27394E-09	4.98169E-09	0.0049817
396366.283768677.2	396366.28	3768677	0	0	0	0	0	0	5.06731E-05	5.06731E-05	0	0	6.87231E-10	4.15004E-09	4.83727E-09	0.0048373
396466.283768677.2	396466.28	3768677	0	0	0	0	0	0	6.22106E-05	6.22106E-05	0	0	8.43704E-10	5.09494E-09	5.93865E-09	0.0059386
396566.283768677.2	396566.28	3768677	0	0	0	0	0	0	6.28893E-05	6.28893E-05	0	0	8.52909E-10	5.15053E-09	6.00344E-09	0.0060034
396666.283768677.2	396666.28	3768677	0	0	0	0	0	0	6.42071E-05	6.42071E-05	0	0	8.7078E-10	5.25845E-09	6.12923E-09	0.0061292
396766.283768677.2	396766.28	3768677	0	0	0	0	0	0	6.66299E-05	6.66299E-05	0	0	9.03639E-10	5.45688E-09	6.36051E-09	0.0063605
396866.283768677.2	396866.28	3768677	0	0	0	0	0	0	7.3998E-05	7.3998E-05	0	0	1.00356E-09	6.06031E-09	7.06387E-09	0.0070639
396966.283768677.2	396966.28	3768677	0	0	0	0	0	0	8.09988E-05	8.09988E-05	0	0	1.09851E-09	6.63366E-09	7.73217E-09	0.0077322
397066.283768677.2	397066.28	3768677	0	0	0	0	0	0	9.39578E-05	9.39578E-05	0	0	1.27426E-09	7.69498E-09	8.96924E-09	0.0089692

Garvey Reservoir Rehab - Mitigated I/O Tower			Demolition - 2025	Demolition - 2026	Site Preparation - 2025	ite Preparation - 202	Grading - 2025	Grading - 2026	Infrastructure - 2025	nfrastructure - 2026	Paving - 2025	rchitectural Coating - 202	Child Risk			
Unique Identifier	X (UTM)	Y (UTM)	1900	1900	1900	1900	1900	1900	2025	2026	1900	1900	3rd Trimester	0<2	Total	per million
397166.283768677.2	397166.28	3768677	0	0	0	0	0	0	0.000147469	0.000147469	0	0	1.99998E-09	1.20774E-08	1.40774E-08	0.0140774
397366.283768677.2	397366.28	3768677	0	0	0	0	0	0	0.000196102	0.000196102	0	0	2.65955E-09	1.60604E-08	1.872E-08	0.01872
397466.283768677.2	397466.28	3768677	0	0	0	0	0	0	7.90103E-05	7.90103E-05	0	0	1.07154E-09	6.47081E-09	7.54235E-09	0.0075424
397566.283768677.2	397566.28	3768677	0	0	0	0	0	0	4.30868E-05	4.30868E-05	0	0	5.84345E-10	3.52873E-09	4.11308E-09	0.0041131
397666.283768677.2	397666.28	3768677	0	0	0	0	0	0	2.82298E-05	2.82298E-05	0	0	3.82854E-10	2.31197E-09	2.69482E-09	0.0026948
397766.283768677.2	397766.28	3768677	0	0	0	0	0	0	2.08218E-05	2.08218E-05	0	0	2.82386E-10	1.70527E-09	1.98766E-09	0.0019877
397866.283768677.2	397866.28	3768677	0	0	0	0	0	0	1.52892E-05	1.52892E-05	0	0	2.07353E-10	1.25216E-09	1.45951E-09	0.0014595
396166.283768777.2	396166.28	3768777	0	0	0	0	0	0	0.000132727	0.000132727	0	0	1.80005E-09	1.08701E-08	1.26702E-08	0.0126702
396266.283768777.2	396266.28	3768777	0	0	0	0	0	0	0.000164923	0.000164923	0	0	2.23669E-09	1.35069E-08	1.57436E-08	0.0157436
396366.283768777.2	396366.28	3768777	0	0	0	0	0	0	0.000120907	0.000120907	0	0	1.63975E-09	9.90207E-09	1.15418E-08	0.0115418
396466.283768777.2	396466.28	3768777	0	0	0	0	0	0	0.000157991	0.000157991	0	0	2.14269E-09	1.29392E-08	1.50819E-08	0.0150819
396566.283768777.2	396566.28	3768777	0	0	0	0	0	0	0.000169188	0.000169188	0	0	2.29453E-09	1.38562E-08	1.61507E-08	0.0161507
396666.283768777.2	396666.28	3768777	0	0	0	0	0	0	0.000169128	0.000169128	0	0	2.29373E-09	1.38513E-08	1.61451E-08	0.0161451
396766.283768777.2	396766.28	3768777	0	0	0	0	0	0	0.000174954	0.000174954	0	0	2.37274E-09	1.43285E-08	1.67012E-08	0.0167012
396866.283768777.2	396866.28	3768777	0	0	0	0	0	0	0.000181896	0.000181896	0	0	2.46688E-09	1.48969E-08	1.73638E-08	0.0173638
396966.283768777.2	396966.28	3768777	0	0	0	0	0	0	0.000186382	0.000186382	0	0	2.52772E-09	1.52643E-08	1.7792E-08	0.017792
397066.283768777.2	397066.28	3768777	0	0	0	0	0	0	0.000200791	0.000200791	0	0	2.72314E-09	1.64445E-08	1.91676E-08	0.0191676
397166.283768777.2	397166.28	3768777	0	0	0	0	0	0	0.000241802	0.000241802	0	0	3.27934E-09	1.98032E-08	2.30825E-08	0.0230825
397266.283768777.2	397266.28	3768777	0	0	0	0	0	0	0.000771231	0.000771231	0	0	1.04595E-08	6.31625E-08	7.3622E-08	0.073622
397366.283768777.2	397366.28	3768777	0	0	0	0	0	0	0.000267969	0.000267969	0	0	3.63421E-09	2.19462E-08	2.55804E-08	0.0255804
397466.283768777.2	397466.28	3768777	0	0	0	0	0	0	9.42505E-05	9.42505E-05	0	0	1.27823E-09	7.71896E-09	8.99719E-09	0.0089972
397566.283768777.2	397566.28	3768777	0	0	0	0	0	0	5.0549E-05	5.0549E-05	0	0	6.85549E-10	4.13988E-09	4.82543E-09	0.0048254
397666.283768777.2	397666.28	3768777	0	0	0	0	0	0	3.17912E-05	3.17912E-05	0	0	4.31155E-10	2.60365E-09	3.0348E-09	0.0030348
397766.283768777.2	397766.28	3768777	0	0	0	0	0	0	2.17646E-05	2.17646E-05	0	0	2.95173E-10	1.78249E-09	2.07766E-09	0.0020777
397866.283768777.2	397866.28	3768777	0	0	0	0	0	0	1.58433E-05	1.58433E-05	0	0	2.14867E-10	1.29754E-09	1.5124E-09	0.0015124
396166.283768877.2	396166.28	3768877	0	0	0	0	0	0	0.000534373	0.000534373	0	0	7.24719E-09	4.37642E-08	5.10114E-08	0.0510114
396266.283768877.2	396266.28	3768877	0	0	0	0	0	0	0.000688214	0.000688214	0	0	9.3336E-09	5.63635E-08	6.56971E-08	0.0656971
396366.283768877.2	396366.28	3768877	0	0	0	0	0	0	0.000673899	0.000673899	0	0	9.13946E-09	5.51912E-08	6.43306E-08	0.0643306
396466.283768877.2	396466.28	3768877	0	0	0	0	0	0	0.000742351	0.000742351	0	0	1.00678E-08	6.07973E-08	7.08651E-08	0.0708651
396566.283768877.2	396566.28	3768877	0	0	0	0	0	0	0.00070014	0.00070014	0	0	9.49534E-09	5.73403E-08	6.68356E-08	0.0668356
396666.283768877.2	396666.28	3768877	0	0	0	0	0	0	0.000760661	0.000760661	0	0	1.03161E-08	6.22969E-08	7.2613E-08	0.072613
396766.283768877.2	396766.28	3768877	0	0	0	0	0	0	0.000736205	0.000736205	0	0	9.98445E-09	6.02939E-08	7.02784E-08	0.0702784
396866.283768877.2	396866.28	3768877	0	0	0	0	0	0	0.000715148	0.000715148	0	0	9.69888E-09	5.85694E-08	6.82683E-08	0.0682683
396966.283768877.2	396966.28	3768877	0	0	0	0	0	0	0.000687674	0.000687674	0	0	9.32627E-09	5.63193E-08	6.56456E-08	0.0656456
397066.283768877.2	397066.28	3768877	0	0	0	0	0	0	0.000695221	0.000695221	0	0	9.42863E-09	5.69374E-08	6.63661E-08	0.0663661
397166.283768877.2	397166.28	3768877	0	0	0	0	0	0	0.000714546	0.000714546	0	0	9.69072E-09	5.85201E-08	6.82108E-08	0.0682108
397266.283768877.2	397266.28	3768877	0	0	0	0	0	0	0.000750688	0.000750688	0	0	1.01809E-08	6.14801E-08	7.1661E-08	0.071661
397366.283768877.2	397366.28	3768877	0	0	0	0	0	0	0.000369107	0.000369107	0	0	5.00585E-09	3.02292E-08	3.52351E-08	0.0352351
397466.283768877.2	397466.28	3768877	0	0	0	0	0	0	9.87798E-05	9.87798E-05	0	0	1.33966E-09	8.0899E-09	9.42955E-09	0.0094296
397566.283768877.2	397566.28	3768877	0	0	0	0	0	0	5.05103E-05	5.05103E-05	0	0	6.85024E-10	4.13671E-09	4.82173E-09	0.0048217
397666.283768877.2	397666.28	3768877	0	0	0	0	0	0	3.1331E-05	3.1331E-05	0	0	4.24913E-10	2.56596E-09	2.99087E-09	0.0029909
397766.283768877.2	397766.28	3768877	0	0	0	0	0	0	2.16575E-05	2.16575E-05	0	0	2.9372E-10	1.77371E-09	2.06743E-09	0.0020674
397866.283768877.2	397866.28	3768877	0	0	0	0	0	0	1.60291E-05	1.60291E-05	0	0	2.17387E-10	1.31275E-09	1.53014E-09	0.0015301
3964253767739	396425	3767739	0	0	0	0	0	0	7.20397E-06	7.20397E-06	0	0	9.77007E-11	5.89993E-10	6.87694E-10	0.0006877
3964753767739	396475	3767739	0	0	0	0	0	0	7.37609E-06	7.37609E-06	0	0	1.00035E-10	6.04089E-10	7.04124E-10	0.0007041
3965253767739	396525	3767739	0	0	0	0	0	0	6.87507E-06	6.87507E-06	0	0	9.32401E-11	5.63057E-10	6.56297E-10	0.0006563
3965753767739	396575	3767739	0	0	0	0	0	0	7.07382E-06	7.07382E-06	0	0	9.59355E-11	5.79334E-10	6.75269E-10	0.0006753
3966253767739	396625	3767739	0	0	0	0	0	0	6.79381E-06	6.79381E-06	0	0	9.2138E-11	5.56401E-10	6.48539E-10	0.0006485
3966753767739	396675	3767739	0	0	0	0	0	0	6.95207E-06	6.95207E-06	0	0	9.42844E-11	5.69363E-10	6.63647E-10	0.0006636
3967253767739	396725	3767739	0	0	0	0	0	0	7.26558E-06	7.26558E-06	0	0	9.85362E-11	5.95039E-10	6.93575E-10	0.0006936
3967753767739	396775	3767739	0	0	0	0	0	0	7.32665E-06	7.32665E-06	0	0	9.93644E-11	6.0004E-10	6.99404E-10	0.0006994
3968253767739	396825	3767739	0	0	0	0	0	0	7.73952E-06	7.73952E-06	0	0	1.04964E-10	6.33854E-10	7.38817E-10	0.0007388
3968753767739	396875	3767739	0	0	0	0	0	0	7.96493E-06	7.96493E-06	0	0	1.08021E-10	6.52314E-10	7.60335E-10	0.0007603
3969253767739	396925	3767739	0	0	0	0	0	0	7.94294E-06	7.94294E-06	0	0	1.07723E-10	6.50513E-10	7.58235E-10	0.0007582
3969753767739	396975	3767739	0	0	0	0	0	0	7.89019E-06	7.89019E-06	0	0	1.07007E-10	6.46193E-10	7.53201E-10	0.0007532
3970253767739	397025	3767739	0	0	0	0	0	0	7.85697E-06	7.85697E-06	0	0	1.06557E-10	6.43472E-10	7.50029E-10	0.00075
3970753767739	397075	3767739	0	0	0	0	0	0	7.89709E-06	7.89709E-06	0	0	1.07101E-10	6.46758E-10	7.53859E-10	0.0007539
3971253767739	397125	3767739	0	0	0	0	0	0	7.90673E-06	7.90673E-06	0	0	1.07232E-10	6.47548E-10	7.54779E-10	0.0007548
3971753767739	397175	3767739	0	0	0	0	0	0	7.80276E-06	7.80276E-06	0	0	1.05821E-10	6.39033E-10	7.44854E-10	0.0007449
3972253767739	397225	3767739	0	0	0	0	0	0	7.63719E-06	7.63719E-06	0	0	1.03576E-10	6.25473E-10	7.29048E-10	0.000729
3972753767739	397275	3767739	0	0	0	0	0	0	7.20278E-06	7.20278E-06	0	0	9.76845E-11	5.89895E-10	6.8758E-10	0.0006876
3973253767739	397325	3767739	0	0	0	0	0	0	7.20566E-06	7.20566E-06	0	0	9.77236E-11	5.90131E-10	6.87855E-10	0.0006879
3973753767739	397375	3767739	0	0	0	0	0	0	7.18178E-06	7.18178E-06	0	0	9.73997E-11	5.88175E-10	6.85575E-10	0.0006856
3974253767739	397425	3767739	0	0	0	0	0	0	6.98887E-06	6.98887E-06	0	0	9.47834E-11	5.72376E-10	6.6716E-10	0.0006672
3974753767739	397475	3767739	0	0	0	0	0	0	6.17468E-06	6.17468E-06	0	0	8.37413E-11	5.05695E-10	5.89437E-10	0.0005894
3975253767739	397525	3767739	0	0	0	0	0	0	5.96908E-06	5.96908E-06	0	0	8.0953E-11	4.88857E-10	5.6981E-10	0.0005698
3964253767789	396425	3767789	0	0	0	0	0	0	7.6955E-06	7.6955E-06	0	0	1.04367E-10	6.30248E-10	7.34615E-10	0.0007346
3964753767789	396475	3767789	0	0	0	0	0	0	7.41389E-06	7.41389E-06	0	0	1.00548E-10	6.07185E-10	7.07733E-10	0.0007077
3965253767789	396525	3767789	0	0	0	0	0	0	7.02164E-06	7.02164E-06	0	0	9.52279E-11	5.75061E-10	6.70288E-10	0.0006703
3965753767789	396575	3767789	0	0	0	0	0	0	7.10663E-06	7.10663E-06	0	0	9.63805E-11	5.82021E-10	6.78401E-10	0.0006784
3966253767789	396625	3767789	0	0	0	0	0	0	7.29373E-06	7.29373E-06	0	0	9.8918E-11	5.97344E-10	6.96262E-10	0.0006963

Garvey Reservoir Rehab - Mitigated I/O Tower			Demolition - 2025	Demolition - 2026	Site Preparation - 2025	ite Preparation - 202	Grading - 2025	Grading - 2026	Infrastructure - 2025	nfrastructure - 2026	Paving - 2025	rchitectural Coating - 202	Child Risk			
Unique Identifier	X (UTM)	Y (UTM)	1900	1900	1900	1900	1900	1900	2025	2026	1900	1900	3rd Trimester	0<2	Total	per million
3966753767789	396675	3767789	0	0	0	0	0	0	7.51273E-06	7.51273E-06	0	0	1.01888E-10	6.1528E-10	7.17168E-10	0.0007172
3967253767789	396725	3767789	0	0	0	0	0	0	8.10376E-06	8.10376E-06	0	0	1.09904E-10	6.63684E-10	7.73588E-10	0.0007736
3967753767789	396775	3767789	0	0	0	0	0	0	8.30081E-06	8.30081E-06	0	0	1.12576E-10	6.79822E-10	7.92398E-10	0.0007924
3968253767789	396825	3767789	0	0	0	0	0	0	8.67271E-06	8.67271E-06	0	0	1.1762E-10	7.1028E-10	8.279E-10	0.0008279
3968753767789	396875	3767789	0	0	0	0	0	0	8.79661E-06	8.79661E-06	0	0	1.193E-10	7.20427E-10	8.39728E-10	0.0008397
3969253767789	396925	3767789	0	0	0	0	0	0	8.79264E-06	8.79264E-06	0	0	1.19246E-10	7.20102E-10	8.39348E-10	0.0008393
3969753767789	396975	3767789	0	0	0	0	0	0	8.68443E-06	8.68443E-06	0	0	1.17779E-10	7.1124E-10	8.29019E-10	0.000829
3970253767789	397025	3767789	0	0	0	0	0	0	8.63588E-06	8.63588E-06	0	0	1.1712E-10	7.07264E-10	8.24384E-10	0.0008244
3970753767789	397075	3767789	0	0	0	0	0	0	8.71677E-06	8.71677E-06	0	0	1.18217E-10	7.13888E-10	8.32106E-10	0.0008321
3971253767789	397125	3767789	0	0	0	0	0	0	8.77979E-06	8.77979E-06	0	0	1.19072E-10	7.1905E-10	8.38122E-10	0.0008381
3971753767789	397175	3767789	0	0	0	0	0	0	8.74035E-06	8.74035E-06	0	0	1.18537E-10	7.1582E-10	8.34357E-10	0.0008344
3972253767789	397225	3767789	0	0	0	0	0	0	8.63093E-06	8.63093E-06	0	0	1.17053E-10	7.06858E-10	8.23912E-10	0.0008239
3972753767789	397275	3767789	0	0	0	0	0	0	8.15315E-06	8.15315E-06	0	0	1.10573E-10	6.67729E-10	7.78302E-10	0.0007783
3973253767789	397325	3767789	0	0	0	0	0	0	7.95506E-06	7.95506E-06	0	0	1.07887E-10	6.51506E-10	7.59393E-10	0.0007594
3973753767789	397375	3767789	0	0	0	0	0	0	7.98046E-06	7.98046E-06	0	0	1.08231E-10	6.53586E-10	7.61818E-10	0.0007618
3974253767789	397425	3767789	0	0	0	0	0	0	7.81708E-06	7.81708E-06	0	0	1.06016E-10	6.40205E-10	7.46221E-10	0.0007462
3974753767789	397475	3767789	0	0	0	0	0	0	6.81191E-06	6.81191E-06	0	0	9.23836E-11	5.57884E-10	6.50268E-10	0.0006503
3975253767789	397525	3767789	0	0	0	0	0	0	6.60683E-06	6.60683E-06	0	0	8.96022E-11	5.41088E-10	6.3069E-10	0.0006307
3964253767839	396425	3767839	0	0	0	0	0	0	8.21604E-06	8.21604E-06	0	0	1.11426E-10	6.7288E-10	7.84306E-10	0.0007843
3964753767839	396475	3767839	0	0	0	0	0	0	8.16376E-06	8.16376E-06	0	0	1.10717E-10	6.68598E-10	7.79316E-10	0.0007793
3965253767839	396525	3767839	0	0	0	0	0	0	7.40369E-06	7.40369E-06	0	0	1.00409E-10	6.0635E-10	7.06759E-10	0.0007068
3965753767839	396575	3767839	0	0	0	0	0	0	7.61628E-06	7.61628E-06	0	0	1.03292E-10	6.2376E-10	7.27053E-10	0.0007271
3966253767839	396625	3767839	0	0	0	0	0	0	7.84574E-06	7.84574E-06	0	0	1.06404E-10	6.42553E-10	7.48957E-10	0.000749
3966753767839	396675	3767839	0	0	0	0	0	0	8.75109E-06	8.75109E-06	0	0	1.18683E-10	7.16699E-10	8.35382E-10	0.0008354
3967253767839	396725	3767839	0	0	0	0	0	0	9.16746E-06	9.16746E-06	0	0	1.2433E-10	7.50799E-10	8.75129E-10	0.0008751
3967753767839	396775	3767839	0	0	0	0	0	0	9.40771E-06	9.40771E-06	0	0	1.27588E-10	7.70475E-10	8.98063E-10	0.0008981
3968253767839	396825	3767839	0	0	0	0	0	0	9.64221E-06	9.64221E-06	0	0	1.30768E-10	7.89681E-10	9.20449E-10	0.0009204
3968753767839	396875	3767839	0	0	0	0	0	0	9.75542E-06	9.75542E-06	0	0	1.32304E-10	7.98952E-10	9.31256E-10	0.0009313
3969253767839	396925	3767839	0	0	0	0	0	0	9.78484E-06	9.78484E-06	0	0	1.32703E-10	8.01361E-10	9.34064E-10	0.0009341
3969753767839	396975	3767839	0	0	0	0	0	0	9.68405E-06	9.68405E-06	0	0	1.31336E-10	7.93107E-10	9.24442E-10	0.0009244
3970253767839	397025	3767839	0	0	0	0	0	0	9.60676E-06	9.60676E-06	0	0	1.30287E-10	7.86777E-10	9.17064E-10	0.0009171
3970753767839	397075	3767839	0	0	0	0	0	0	9.81404E-06	9.81404E-06	0	0	1.33099E-10	8.03753E-10	9.36852E-10	0.0009369
3971253767839	397125	3767839	0	0	0	0	0	0	9.99446E-06	9.99446E-06	0	0	1.35545E-10	8.18529E-10	9.54075E-10	0.0009541
3971753767839	397175	3767839	0	0	0	0	0	0	9.86235E-06	9.86235E-06	0	0	1.33754E-10	8.0771E-10	9.41463E-10	0.0009415
3972253767839	397225	3767839	0	0	0	0	0	0	9.48179E-06	9.48179E-06	0	0	1.28593E-10	7.76543E-10	9.05135E-10	0.0009051
3972753767839	397275	3767839	0	0	0	0	0	0	8.98205E-06	8.98205E-06	0	0	1.21815E-10	7.35614E-10	8.57429E-10	0.0008574
3973253767839	397325	3767839	0	0	0	0	0	0	8.56318E-06	8.56318E-06	0	0	1.16134E-10	7.0131E-10	8.17444E-10	0.0008174
3973753767839	397375	3767839	0	0	0	0	0	0	8.90805E-06	8.90805E-06	0	0	1.20812E-10	7.29554E-10	8.50366E-10	0.0008504
3974753767839	397475	3767839	0	0	0	0	0	0	8.39684E-06	8.39684E-06	0	0	1.13878E-10	6.87687E-10	8.01565E-10	0.0008016
3975253767839	397525	3767839	0	0	0	0	0	0	7.17645E-06	7.17645E-06	0	0	9.73275E-11	5.87739E-10	6.85067E-10	0.0006851
3964253767889	396425	3767889	0	0	0	0	0	0	8.68786E-06	8.68786E-06	0	0	1.17825E-10	7.11521E-10	8.29346E-10	0.0008293
3964753767889	396475	3767889	0	0	0	0	0	0	7.72394E-06	7.72394E-06	0	0	1.04753E-10	6.32578E-10	7.3733E-10	0.0007373
3965253767889	396525	3767889	0	0	0	0	0	0	7.92693E-06	7.92693E-06	0	0	1.07506E-10	6.49202E-10	7.56708E-10	0.0007567
3965753767889	396575	3767889	0	0	0	0	0	0	8.28594E-06	8.28594E-06	0	0	1.12374E-10	6.78604E-10	7.90978E-10	0.000791
3974753767889	397475	3767889	0	0	0	0	0	0	9.11005E-06	9.11005E-06	0	0	1.23551E-10	7.46098E-10	8.69649E-10	0.0008696
3975253767889	397525	3767889	0	0	0	0	0	0	7.91657E-06	7.91657E-06	0	0	1.07365E-10	6.48353E-10	7.55718E-10	0.0007557
3964253767939	396425	3767939	0	0	0	0	0	0	9.223E-06	9.223E-06	0	0	1.25083E-10	7.55348E-10	8.80431E-10	0.0008804
3964753767939	396475	3767939	0	0	0	0	0	0	8.29009E-06	8.29009E-06	0	0	1.12431E-10	6.78944E-10	7.91375E-10	0.0007914
3965253767939	396525	3767939	0	0	0	0	0	0	8.58704E-06	8.58704E-06	0	0	1.16458E-10	7.03264E-10	8.19722E-10	0.0008197
3974753767939	397475	3767939	0	0	0	0	0	0	9.67969E-06	9.67969E-06	0	0	1.31276E-10	7.9275E-10	9.24026E-10	0.000924
3975253767939	397525	3767939	0	0	0	0	0	0	8.84858E-06	8.84858E-06	0	0	1.20005E-10	7.24683E-10	8.44688E-10	0.0008447
3964253767989	396425	3767989	0	0	0	0	0	0	9.04835E-06	9.04835E-06	0	0	1.22714E-10	7.41045E-10	8.63759E-10	0.0008638
3964753767989	396475	3767989	0	0	0	0	0	0	9.00918E-06	9.00918E-06	0	0	1.22183E-10	7.37837E-10	8.6002E-10	0.00086
3974753767989	397475	3767989	0	0	0	0	0	0	1.11242E-05	1.11242E-05	0	0	1.50867E-10	9.11053E-10	1.06192E-09	0.0010619
3975253767989	397525	3767989	0	0	0	0	0	0	1.00822E-05	1.00822E-05	0	0	1.36735E-10	8.25715E-10	9.62451E-10	0.0009625
3964253768039	396425	3768039	0	0	0	0	0	0	9.75461E-06	9.75461E-06	0	0	1.32293E-10	7.98886E-10	9.31179E-10	0.0009312
3964753768039	396475	3768039	0	0	0	0	0	0	1.00792E-05	1.00792E-05	0	0	1.36695E-10	8.2547E-10	9.62165E-10	0.0009622
3974753768039	397475	3768039	0	0	0	0	0	0	1.48514E-05	1.48514E-05	0	0	2.01416E-10	1.21631E-09	1.41772E-09	0.0014177
3975253768039	397525	3768039	0	0	0	0	0	0	1.38974E-05	1.38974E-05	0	0	1.88477E-10	1.13817E-09	1.32665E-09	0.0013267
3964253768089	396425	3768089	0	0	0	0	0	0	1.07571E-05	1.07571E-05	0	0	1.45888E-10	8.80985E-10	1.02687E-09	0.0010269
3964753768089	396475	3768089	0	0	0	0	0	0	1.13061E-05	1.13061E-05	0	0	1.53334E-10	9.25953E-10	1.07929E-09	0.0010793
3974753768089	397475	3768089	0	0	0	0	0	0	1.99899E-05	1.99899E-05	0	0	2.71104E-10	1.63714E-09	1.90824E-09	0.0019082
3975253768089	397525	3768089	0	0	0	0	0	0	1.841E-05	1.841E-05	0	0	2.49678E-10	1.50775E-09	1.75743E-09	0.0017574
3964253768139	396425	3768139	0	0	0	0	0	0	1.33947E-05	1.33947E-05	0	0	1.8166E-10	1.097E-09	1.27866E-09	0.0012787
3964753768139	396475	3768139	0	0	0	0	0	0	1.23382E-05	1.23382E-05	0	0	1.67331E-10	1.01048E-09	1.17781E-09	0.0011778
3974253768139	397425	3768139	0	0	0	0	0	0	4.24084E-05	4.24084E-05	0	0	5.75145E-10	3.47318E-09	4.04832E-09	0.0040483
3974753768139	397475	3768139	0	0	0	0	0	0	3.07235E-05	3.07235E-05	0	0	4.16674E-10	2.5162E-09	2.93288E-09	0.0029329
3975253768139	397525	3768139	0	0	0	0	0	0	2.31816E-05	2.31816E-05	0	0	3.1439E-10	1.89853E-09	2.21292E-09	0.0022129
3964253768189	396425	3768189	0	0	0	0	0	0	1.44308E-05	1.44308E-05	0	0	1.95712E-10	1.18186E-09	1.37757E-09	0.0013776
3964753768189	396475	3768189	0	0	0	0	0	0	1.35066E-05	1.35066E-05	0	0	1.83177E-10	1.10617E-09	1.28934E-09	0.0012893
3973753768189	397375	3768189	0	0	0	0	0	0	0.000251374	0.000251374	0	0	3.40915E-09	2.05871E-08	2.39962E-08	0.0239962

Garvey Reservoir Rehab - Mitigated I/O Tower			Demolition - 2025	Demolition - 2026	Site Preparation - 2025	ite Preparation - 202	Grading - 2025	Grading - 2026	Infrastructure - 2025	nfrastructure - 2026	Paving - 2025	rchitectural Coating - 202	Child Risk			
Unique Identifier	X (UTM)	Y (UTM)	1900	1900	1900	1900	1900	1900	2025	2026	1900	1900	3rd Trimester	0<2	Total	per million
3974253768189	397425	3768189	0	0	0	0	0	0	7.26092E-05	7.26092E-05	0	0	9.8473E-10	5.94657E-09	6.9313E-09	0.0069313
3974753768189	397475	3768189	0	0	0	0	0	0	4.16037E-05	4.16037E-05	0	0	5.64232E-10	3.40727E-09	3.97151E-09	0.0039715
3975253768189	397525	3768189	0	0	0	0	0	0	2.86451E-05	2.86451E-05	0	0	3.88487E-10	2.34599E-09	2.73447E-09	0.0027345
3964253768239	396425	3768239	0	0	0	0	0	0	1.56187E-05	1.56187E-05	0	0	2.11822E-10	1.27915E-09	1.49097E-09	0.001491
3964753768239	396475	3768239	0	0	0	0	0	0	1.49348E-05	1.49348E-05	0	0	2.02547E-10	1.22314E-09	1.42569E-09	0.0014257
3973753768239	397375	3768239	0	0	0	0	0	0	0.000366194	0.000366194	0	0	4.96635E-09	2.99907E-08	3.4957E-08	0.034957
3974253768239	397425	3768239	0	0	0	0	0	0	9.31217E-05	9.31217E-05	0	0	1.26292E-09	7.62651E-09	8.88943E-09	0.0088894
3974753768239	397475	3768239	0	0	0	0	0	0	5.02084E-05	5.02084E-05	0	0	6.80929E-10	4.11198E-09	4.79291E-09	0.0047929
3975253768239	397525	3768239	0	0	0	0	0	0	3.40586E-05	3.40586E-05	0	0	4.61904E-10	2.78934E-09	3.25124E-09	0.0032512
3964253768289	396425	3768289	0	0	0	0	0	0	1.67187E-05	1.67187E-05	0	0	2.2674E-10	1.36923E-09	1.59597E-09	0.001596
3964753768289	396475	3768289	0	0	0	0	0	0	1.66394E-05	1.66394E-05	0	0	2.25665E-10	1.36274E-09	1.58841E-09	0.0015884
3973253768289	397325	3768289	0	0	0	0	0	0	0.000970128	0.000970128	0	0	1.31569E-08	7.94518E-08	9.26087E-08	0.0926087
3973753768289	397375	3768289	0	0	0	0	0	0	0.000256808	0.000256808	0	0	3.48284E-09	2.10321E-08	2.4515E-08	0.024515
3974253768289	397425	3768289	0	0	0	0	0	0	0.000113184	0.000113184	0	0	1.53501E-09	9.26956E-09	1.08046E-08	0.0108046
3974753768289	397475	3768289	0	0	0	0	0	0	6.23968E-05	6.23968E-05	0	0	8.46228E-10	5.11019E-09	5.95642E-09	0.0059564
3975253768289	397525	3768289	0	0	0	0	0	0	4.04861E-05	4.04861E-05	0	0	5.49075E-10	3.31574E-09	3.86482E-09	0.0038648
3964253768339	396425	3768339	0	0	0	0	0	0	1.89441E-05	1.89441E-05	0	0	2.56921E-10	1.55149E-09	1.80841E-09	0.0018084
3964753768339	396475	3768339	0	0	0	0	0	0	1.88028E-05	1.88028E-05	0	0	2.55004E-10	1.53992E-09	1.79492E-09	0.0017949
3965253768339	396525	3768339	0	0	0	0	0	0	2.00438E-05	2.00438E-05	0	0	2.71835E-10	1.64155E-09	1.91339E-09	0.0019134
3972753768339	397275	3768339	0	0	0	0	0	0	0.000788164	0.000788164	0	0	1.06891E-08	6.45493E-08	7.52384E-08	0.0752384
3973253768339	397325	3768339	0	0	0	0	0	0	0.000581036	0.000581036	0	0	7.88004E-09	4.75859E-08	5.54659E-08	0.0554659
3973753768339	397375	3768339	0	0	0	0	0	0	0.00021402	0.00021402	0	0	2.90256E-09	1.75279E-08	2.04305E-08	0.0204305
3974253768339	397425	3768339	0	0	0	0	0	0	0.000112533	0.000112533	0	0	1.52618E-09	9.21628E-09	1.07425E-08	0.0107425
3974753768339	397475	3768339	0	0	0	0	0	0	6.76729E-05	6.76729E-05	0	0	9.17783E-10	5.54229E-09	6.46008E-09	0.0064601
3975253768339	397525	3768339	0	0	0	0	0	0	4.496E-05	4.496E-05	0	0	6.0975E-10	3.68215E-09	4.2919E-09	0.0042919
3964253768389	396425	3768389	0	0	0	0	0	0	2.10518E-05	2.10518E-05	0	0	2.85505E-10	1.7241E-09	2.00961E-09	0.0020096
3964753768389	396475	3768389	0	0	0	0	0	0	2.14284E-05	2.14284E-05	0	0	2.90614E-10	1.75495E-09	2.04557E-09	0.0020456
3965253768389	396525	3768389	0	0	0	0	0	0	2.24599E-05	2.24599E-05	0	0	3.04602E-10	1.83942E-09	2.14403E-09	0.002144
3972253768389	397225	3768389	0	0	0	0	0	0	0.000189473	0.000189473	0	0	2.56964E-09	1.55175E-08	1.80872E-08	0.0180872
3972753768389	397275	3768389	0	0	0	0	0	0	0.000750467	0.000750467	0	0	1.01779E-08	6.1462E-08	7.16398E-08	0.0716398
3973253768389	397325	3768389	0	0	0	0	0	0	0.00058123	0.00058123	0	0	7.88267E-09	4.76017E-08	5.54844E-08	0.0554844
3973753768389	397375	3768389	0	0	0	0	0	0	0.000206027	0.000206027	0	0	2.79415E-09	1.68733E-08	1.96674E-08	0.0196674
3974253768389	397425	3768389	0	0	0	0	0	0	0.000112723	0.000112723	0	0	1.52876E-09	9.23186E-09	1.07606E-08	0.0107606
3974753768389	397475	3768389	0	0	0	0	0	0	7.12803E-05	7.12803E-05	0	0	9.66707E-10	5.83773E-09	6.80444E-09	0.0068044
3975253768389	397525	3768389	0	0	0	0	0	0	4.89604E-05	4.89604E-05	0	0	6.64004E-10	4.00977E-09	4.67378E-09	0.0046738
3964253768439	396425	3768439	0	0	0	0	0	0	2.38928E-05	2.38928E-05	0	0	3.24035E-10	1.95678E-09	2.28081E-09	0.0022808
3964753768439	396475	3768439	0	0	0	0	0	0	2.46051E-05	2.46051E-05	0	0	3.33695E-10	2.01511E-09	2.34881E-09	0.0023488
3965253768439	396525	3768439	0	0	0	0	0	0	2.54921E-05	2.54921E-05	0	0	3.45725E-10	2.08776E-09	2.43348E-09	0.0024335
3971753768439	397175	3768439	0	0	0	0	0	0	0.000102075	0.000102075	0	0	1.38435E-09	8.3598E-09	9.74416E-09	0.0097442
3972253768439	397225	3768439	0	0	0	0	0	0	0.000198768	0.000198768	0	0	2.69571E-09	1.62788E-08	1.89745E-08	0.0189745
3972753768439	397275	3768439	0	0	0	0	0	0	0.000754179	0.000754179	0	0	1.02282E-08	6.1766E-08	7.19942E-08	0.0719942
3973253768439	397325	3768439	0	0	0	0	0	0	0.000567481	0.000567481	0	0	7.69621E-09	4.64757E-08	5.41719E-08	0.0541719
3973753768439	397375	3768439	0	0	0	0	0	0	0.000190445	0.000190445	0	0	2.58282E-09	1.55971E-08	1.81799E-08	0.0181799
3974253768439	397425	3768439	0	0	0	0	0	0	0.000104214	0.000104214	0	0	1.41335E-09	8.53493E-09	9.94828E-09	0.0099483
3974753768439	397475	3768439	0	0	0	0	0	0	7.37959E-05	7.37959E-05	0	0	1.00082E-09	6.04376E-09	7.04458E-09	0.0070446
3975253768439	397525	3768439	0	0	0	0	0	0	5.18253E-05	5.18253E-05	0	0	7.02858E-10	4.24441E-09	4.94727E-09	0.0049473
3964253768489	396425	3768489	0	0	0	0	0	0	2.72532E-05	2.72532E-05	0	0	3.6961E-10	2.23199E-09	2.6016E-09	0.0026016
3964753768489	396475	3768489	0	0	0	0	0	0	2.8417E-05	2.8417E-05	0	0	3.85394E-10	2.32731E-09	2.7127E-09	0.0027127
3965253768489	396525	3768489	0	0	0	0	0	0	2.95221E-05	2.95221E-05	0	0	4.00381E-10	2.41781E-09	2.81819E-09	0.0028182
3970753768489	397075	3768489	0	0	0	0	0	0	5.81399E-05	5.81399E-05	0	0	7.88496E-10	4.76156E-09	5.55005E-09	0.0055501
3971253768489	397125	3768489	0	0	0	0	0	0	7.3862E-05	7.3862E-05	0	0	1.00172E-09	6.04918E-09	7.0509E-09	0.0070509
3971753768489	397175	3768489	0	0	0	0	0	0	0.000106825	0.000106825	0	0	1.44876E-09	8.74875E-09	1.01975E-08	0.0101975
3972253768489	397225	3768489	0	0	0	0	0	0	0.000197614	0.000197614	0	0	2.68005E-09	1.61842E-08	1.88643E-08	0.0188643
3972753768489	397275	3768489	0	0	0	0	0	0	0.000740434	0.000740434	0	0	1.00418E-08	6.06403E-08	7.06821E-08	0.0706821
3973253768489	397325	3768489	0	0	0	0	0	0	0.000489762	0.000489762	0	0	6.64218E-09	4.01107E-08	4.67529E-08	0.0467529
3973753768489	397375	3768489	0	0	0	0	0	0	0.000187596	0.000187596	0	0	2.54418E-09	1.53638E-08	1.7908E-08	0.017908
3974253768489	397425	3768489	0	0	0	0	0	0	0.000103543	0.000103543	0	0	1.40426E-09	8.48003E-09	9.88429E-09	0.0098843
3974753768489	397475	3768489	0	0	0	0	0	0	6.45349E-05	6.45349E-05	0	0	8.75226E-10	5.2853E-09	6.16052E-09	0.0061605
3975253768489	397525	3768489	0	0	0	0	0	0	4.67519E-05	4.67519E-05	0	0	6.34052E-10	3.8289E-09	4.46296E-09	0.004463
3964253768539	396425	3768539	0	0	0	0	0	0	3.16938E-05	3.16938E-05	0	0	4.29834E-10	2.59567E-09	3.0255E-09	0.0030255
3964753768539	396475	3768539	0	0	0	0	0	0	3.34216E-05	3.34216E-05	0	0	4.53266E-10	2.73717E-09	3.19044E-09	0.0031904
3965253768539	396525	3768539	0	0	0	0	0	0	3.45357E-05	3.45357E-05	0	0	4.68375E-10	2.82841E-09	3.29679E-09	0.0032968
3965753768539	396575	3768539	0	0	0	0	0	0	3.32369E-05	3.32369E-05	0	0	4.50761E-10	2.72205E-09	3.17281E-09	0.0031728
3970253768539	397025	3768539	0	0	0	0	0	0	5.49967E-05	5.49967E-05	0	0	7.45868E-10	4.50413E-09	5.25E-09	0.00525
3970753768539	397075	3768539	0	0	0	0	0	0	6.43527E-05	6.43527E-05	0	0	8.72754E-10	5.27037E-09	6.14313E-09	0.0061431
3971253768539	397125	3768539	0	0	0	0	0	0	8.08591E-05	8.08591E-05	0	0	1.09662E-09	6.62222E-09	7.71883E-09	0.0077188
3971753768539	397175	3768539	0	0	0	0	0	0	0.000115452	0.000115452	0	0	1.56577E-09	9.45532E-09	1.10211E-08	0.0110211
3972253768539	397225	3768539	0	0	0	0	0	0	0.000202489	0.000202489	0	0	2.74617E-09	1.65835E-08	1.93297E-08	0.0193297
3972753768539	397275	3768539	0	0	0	0	0	0	0.000674464	0.000674464	0	0	9.14712E-09	5.52374E-08	6.43846E-08	0.0643846
3973253768539	397325	3768539	0	0	0	0	0	0	0.000472319	0.000472319	0	0	6.40562E-09	3.86821E-08	4.50877E-08	0.0450877
3973753768539	397375	3768539	0	0	0	0	0	0	0.000188947	0.000188947	0	0	2.56251E-09	1.54744E-08	1.80369E-08	0.0180369

Garvey Reservoir Rehab - Mitigated I/O Tower			Demolition - 2025	Demolition - 2026	Site Preparation - 2025	ite Preparation - 202	Grading - 2025	Grading - 2026	Infrastructure - 2025	nfrastructure - 2026	Paving - 2025	rchitectural Coating - 202	Child Risk			
Unique Identifier	X (UTM)	Y (UTM)	1900	1900	1900	1900	1900	1900	2025	2026	1900	1900	3rd Trimester	0<2	Total	per million
3974253768539	397425	3768539	0	0	0	0	0	0	0.000101197	0.000101197	0	0	1.37244E-09	8.28788E-09	9.66032E-09	0.0096603
3974753768539	397475	3768539	0	0	0	0	0	0	6.5278E-05	6.5278E-05	0	0	8.85304E-10	5.34616E-09	6.23146E-09	0.0062315
3975253768539	397525	3768539	0	0	0	0	0	0	4.64848E-05	4.64848E-05	0	0	6.3043E-10	3.80703E-09	4.43746E-09	0.0044375
3964253768589	396425	3768589	0	0	0	0	0	0	3.69868E-05	3.69868E-05	0	0	5.01617E-10	3.02916E-09	3.53077E-09	0.0035308
3964753768589	396475	3768589	0	0	0	0	0	0	4.01359E-05	4.01359E-05	0	0	5.44325E-10	3.28706E-09	3.83138E-09	0.0038314
3965253768589	396525	3768589	0	0	0	0	0	0	3.99925E-05	3.99925E-05	0	0	5.42381E-10	3.27532E-09	3.8177E-09	0.0038177
3965753768589	396575	3768589	0	0	0	0	0	0	3.85848E-05	3.85848E-05	0	0	5.23289E-10	3.16003E-09	3.68332E-09	0.0036833
3966253768589	396625	3768589	0	0	0	0	0	0	3.8145E-05	3.8145E-05	0	0	5.17324E-10	3.12401E-09	3.64133E-09	0.0036413
3968253768589	396825	3768589	0	0	0	0	0	0	4.69972E-05	4.69972E-05	0	0	6.37379E-10	3.84899E-09	4.48637E-09	0.0044864
3968753768589	396875	3768589	0	0	0	0	0	0	4.98163E-05	4.98163E-05	0	0	6.75611E-10	4.07987E-09	4.75548E-09	0.0047555
3969253768589	396925	3768589	0	0	0	0	0	0	5.41098E-05	5.41098E-05	0	0	7.3384E-10	4.4315E-09	5.16534E-09	0.0051653
3969753768589	396975	3768589	0	0	0	0	0	0	5.80856E-05	5.80856E-05	0	0	7.87761E-10	4.75711E-09	5.54487E-09	0.0055449
3970253768589	397025	3768589	0	0	0	0	0	0	6.38991E-05	6.38991E-05	0	0	8.66603E-10	5.23323E-09	6.09983E-09	0.0060998
3970753768589	397075	3768589	0	0	0	0	0	0	7.2588E-05	7.2588E-05	0	0	9.84443E-10	5.94483E-09	6.92928E-09	0.0069293
3971253768589	397125	3768589	0	0	0	0	0	0	9.11865E-05	9.11865E-05	0	0	1.23668E-09	7.46802E-09	8.70469E-09	0.0087047
3971753768589	397175	3768589	0	0	0	0	0	0	0.000129253	0.000129253	0	0	1.75293E-09	1.05856E-08	1.23385E-08	0.0123385
3972253768589	397225	3768589	0	0	0	0	0	0	0.000226062	0.000226062	0	0	3.06586E-09	1.85141E-08	2.15799E-08	0.0215799
3972753768589	397275	3768589	0	0	0	0	0	0	0.000720408	0.000720408	0	0	9.77022E-09	5.90002E-08	6.87704E-08	0.0687704
3973253768589	397325	3768589	0	0	0	0	0	0	0.000469065	0.000469065	0	0	6.36149E-09	3.84157E-08	4.47772E-08	0.0447772
3973753768589	397375	3768589	0	0	0	0	0	0	0.000188904	0.000188904	0	0	2.56192E-09	1.54709E-08	1.80328E-08	0.0180328
3974253768589	397425	3768589	0	0	0	0	0	0	9.82419E-05	9.82419E-05	0	0	1.33236E-09	8.04585E-09	9.37821E-09	0.0093782
3974753768589	397475	3768589	0	0	0	0	0	0	6.48067E-05	6.48067E-05	0	0	8.78913E-10	5.30756E-09	6.18647E-09	0.0061865
3975253768589	397525	3768589	0	0	0	0	0	0	4.6876E-05	4.6876E-05	0	0	6.35735E-10	3.83907E-09	4.4748E-09	0.0044748
3964253768639	396425	3768639	0	0	0	0	0	0	4.45817E-05	4.45817E-05	0	0	6.0462E-10	3.65117E-09	4.25579E-09	0.0042558
3964753768639	396475	3768639	0	0	0	0	0	0	5.04824E-05	5.04824E-05	0	0	6.84646E-10	4.13443E-09	4.81907E-09	0.0048191
3965253768639	396525	3768639	0	0	0	0	0	0	4.74389E-05	4.74389E-05	0	0	6.43369E-10	3.88517E-09	4.52854E-09	0.0045285
3965753768639	396575	3768639	0	0	0	0	0	0	4.7726E-05	4.7726E-05	0	0	6.47263E-10	3.90868E-09	4.55594E-09	0.0045559
3966253768639	396625	3768639	0	0	0	0	0	0	4.8578E-05	4.8578E-05	0	0	6.58818E-10	3.97846E-09	4.63728E-09	0.0046373
3966753768639	396675	3768639	0	0	0	0	0	0	4.95918E-05	4.95918E-05	0	0	6.72566E-10	4.06148E-09	4.73405E-09	0.004734
3967253768639	396725	3768639	0	0	0	0	0	0	5.11221E-05	5.11221E-05	0	0	6.93321E-10	4.18682E-09	4.88014E-09	0.0048801
3967753768639	396775	3768639	0	0	0	0	0	0	5.38951E-05	5.38951E-05	0	0	7.30928E-10	4.41391E-09	5.14484E-09	0.0051448
3968253768639	396825	3768639	0	0	0	0	0	0	5.6558E-05	5.6558E-05	0	0	7.67043E-10	4.632E-09	5.39905E-09	0.005399
3968753768639	396875	3768639	0	0	0	0	0	0	6.06448E-05	6.06448E-05	0	0	8.22468E-10	4.96671E-09	5.78917E-09	0.0057892
3969253768639	396925	3768639	0	0	0	0	0	0	6.52452E-05	6.52452E-05	0	0	8.84859E-10	5.34347E-09	6.22833E-09	0.0062283
3969753768639	396975	3768639	0	0	0	0	0	0	6.93001E-05	6.93001E-05	0	0	9.39852E-10	5.67556E-09	6.61541E-09	0.0066154
3970253768639	397025	3768639	0	0	0	0	0	0	7.47681E-05	7.47681E-05	0	0	1.01401E-09	6.12338E-09	7.13739E-09	0.0071374
3970753768639	397075	3768639	0	0	0	0	0	0	8.29754E-05	8.29754E-05	0	0	1.12532E-09	6.79554E-09	7.92086E-09	0.0079209
3971253768639	397125	3768639	0	0	0	0	0	0	9.97722E-05	9.97722E-05	0	0	1.35312E-09	8.17118E-09	9.52429E-09	0.0095243
3971753768639	397175	3768639	0	0	0	0	0	0	0.000145964	0.000145964	0	0	1.97957E-09	1.19542E-08	1.39337E-08	0.0139337
3972253768639	397225	3768639	0	0	0	0	0	0	0.000287662	0.000287662	0	0	3.90129E-09	2.3559E-08	2.74603E-08	0.0274603
3972753768639	397275	3768639	0	0	0	0	0	0	0.001002035	0.001002035	0	0	1.35897E-08	8.20649E-08	9.56546E-08	0.0956546
3973253768639	397325	3768639	0	0	0	0	0	0	0.000422525	0.000422525	0	0	5.73031E-09	3.46041E-08	4.03344E-08	0.0403344
3973753768639	397375	3768639	0	0	0	0	0	0	0.000186159	0.000186159	0	0	2.5247E-09	1.52461E-08	1.77708E-08	0.0177708
3974253768639	397425	3768639	0	0	0	0	0	0	0.000108512	0.000108512	0	0	1.47165E-09	8.88696E-09	1.03586E-08	0.0103586
3974753768639	397475	3768639	0	0	0	0	0	0	6.44145E-05	6.44145E-05	0	0	8.73594E-10	5.27544E-09	6.14903E-09	0.006149
3975253768639	397525	3768639	0	0	0	0	0	0	4.7333E-05	4.7333E-05	0	0	6.41933E-10	3.87649E-09	4.51843E-09	0.0045184
3964253768689	396425	3768689	0	0	0	0	0	0	5.74646E-05	5.74646E-05	0	0	7.79339E-10	4.70626E-09	5.48559E-09	0.0054856
3964753768689	396475	3768689	0	0	0	0	0	0	6.81666E-05	6.81666E-05	0	0	9.2448E-10	5.58273E-09	6.50721E-09	0.0065072
3965253768689	396525	3768689	0	0	0	0	0	0	7.07517E-05	7.07517E-05	0	0	9.59539E-10	5.79444E-09	6.75398E-09	0.006754
3965753768689	396575	3768689	0	0	0	0	0	0	6.95382E-05	6.95382E-05	0	0	9.43081E-10	5.69506E-09	6.63814E-09	0.0066381
3966253768689	396625	3768689	0	0	0	0	0	0	7.03557E-05	7.03557E-05	0	0	9.54168E-10	5.76201E-09	6.71618E-09	0.0067162
3966753768689	396675	3768689	0	0	0	0	0	0	6.98859E-05	6.98859E-05	0	0	9.47796E-10	5.72353E-09	6.67133E-09	0.0066713
3967253768689	396725	3768689	0	0	0	0	0	0	7.10507E-05	7.10507E-05	0	0	9.63593E-10	5.81893E-09	6.78252E-09	0.0067825
3967753768689	396775	3768689	0	0	0	0	0	0	7.20714E-05	7.20714E-05	0	0	9.77436E-10	5.90252E-09	6.87996E-09	0.00688
3968253768689	396825	3768689	0	0	0	0	0	0	7.59723E-05	7.59723E-05	0	0	1.03034E-09	6.222E-09	7.25234E-09	0.0072523
3968753768689	396875	3768689	0	0	0	0	0	0	8.00195E-05	8.00195E-05	0	0	1.08523E-09	6.55346E-09	7.63869E-09	0.0076387
3969253768689	396925	3768689	0	0	0	0	0	0	8.34748E-05	8.34748E-05	0	0	1.13209E-09	6.83644E-09	7.96853E-09	0.0079685
3969753768689	396975	3768689	0	0	0	0	0	0	8.70377E-05	8.70377E-05	0	0	1.18041E-09	7.12824E-09	8.30865E-09	0.0083086
3970253768689	397025	3768689	0	0	0	0	0	0	9.20079E-05	9.20079E-05	0	0	1.24782E-09	7.53529E-09	8.78311E-09	0.0087831
3970753768689	397075	3768689	0	0	0	0	0	0	0.000100925	0.000100925	0	0	1.36875E-09	8.26556E-09	9.6343E-09	0.0096343
3971253768689	397125	3768689	0	0	0	0	0	0	0.000117858	0.000117858	0	0	1.5984E-09	9.65237E-09	1.12508E-08	0.0112508
3971753768689	397175	3768689	0	0	0	0	0	0	0.000164349	0.000164349	0	0	2.22891E-09	1.34599E-08	1.56888E-08	0.0156888
3972253768689	397225	3768689	0	0	0	0	0	0	0.000372703	0.000372703	0	0	5.05461E-09	3.05237E-08	3.55783E-08	0.0355783
3972753768689	397275	3768689	0	0	0	0	0	0	0.001023715	0.001023715	0	0	1.38837E-08	8.38405E-08	9.77242E-08	0.0977242
3973253768689	397325	3768689	0	0	0	0	0	0	0.000342623	0.000342623	0	0	4.64668E-09	2.80603E-08	3.2707E-08	0.032707
3973753768689	397375	3768689	0	0	0	0	0	0	0.000173454	0.000173454	0	0	2.35239E-09	1.42055E-08	1.65579E-08	0.0165579
3974253768689	397425	3768689	0	0	0	0	0	0	0.000108349	0.000108349	0	0	1.46943E-09	8.87357E-09	1.0343E-08	0.010343
3974753768689	397475	3768689	0	0	0	0	0	0	7.39421E-05	7.39421E-05	0	0	1.00281E-09	6.05573E-09	7.05853E-09	0.0070585
3975253768689	397525	3768689	0	0	0	0	0	0	5.3666E-05	5.3666E-05	0	0	7.27821E-10	4.39515E-09	5.12298E-09	0.005123

Garvey Reservoir Rehab - Mitigated I/O Tower

Maximum Individual Non-Cancer Impact Calculations - Sensitive Receptors (Maximum Impacted Senior Residential Receptor) (IMPACT AT ALL OTHER LOCATIONS ON THE PROJECT SITE WOULD BE LESS THAN SHOWN)

Maximum Non-cancer Chronic Hazards / Toxicological Endpoints*

Receptor Group	Pollutant	CREL[1]	CONC	WFrac	$CONC_{WF}$	HI		ALIM	BN	CVS	DEV	ENDC	EYE	HEM	IMMUN	KIDN	NS	REPRO	RESP	SK
Project:																				
MEI - Max	DPM	5.00E+00	4.52E-03	1.00E+00	4.52E-03	0.001		-	-	-	-	-	-	-	-	-	-	-	9.04E-04	-
							Total Risk				-			-				-	0.001	
							Threshold				1.00			1.00				1.00	1.00	
							Over?				NO			NO				NO	NO	

Notes:

1. California Air Resources Board, "Consolidated Table of OEHHA/ARB Approved Risk Assessment Health Values," "OEHHA/ARB Approved Chronic Reference Exposure Levels and Target Organs," "OEHHA/ARB Approved Acute Reference Exposure Levels and Target Organs," and "OEHHA/ARB Approved 8-Hour Reference Exposure Levels and Target Organs," http://www.arb.ca.gov/toxics/healthval/healthval.htm. Tables last updated: May 8, 2018. Downloaded: 08/14/18.

Source: ESA, 2020

Where:

$CONC_{WF}$	Pollutant Concentration ($\mu g/m^3$) multiplied by the weight fraction
CREL	Chronic Reference Exposure Level
HI	Hazard Index
MEI	Maximally Exposed Individual
WFrac	Weight fraction of speciated component

* Key to Toxicological Endpoints

ALIM	Alimentary Tract	EYE	Eye	NS	Nervous System
BN	Bone	HEM	Hematologic System	REPRO	Reproductive System
CVS	Cardiovascular System	IMMUN	Immune System	RESP	Respiratory System
DEV	Developmental System	KIDN	Kidney	SK	Skin
ENDC	Endocrine System				

Junction Structure

Garvey Reservoir Rehab - Unmitigated Junction Structure

Cancer Risk Summary & Maximum Annual GLC for Chronic Calculations

Cancer Risk Summary

Max Risk: 28.16465

XY	X	Y	Offroad Risk	Haul Risk	Total Risk
7449041451	574490	4145130	0.016768299	0.000172241	0.016941
7448041451	574480	4145140	0.018521933	0.000176146	0.018698
7449041451	574490	4145140	0.021145726	0.00018331	0.021329
7449041451	574490	4145150	0.023902706	0.000188086	0.024091
7450041451	574500	4145150	0.027330063	0.000206193	0.027536
7446041451	574460	4145160	0.03043777	0.000194944	0.030633
7449041451	574490	4145160	0.033270222	0.00019418	0.033464
7450041451	574500	4145160	0.036395688	0.00019435	0.03659
7451041451	574510	4145160	0.040235926	0.000196922	0.040433
7446041451	574460	4145170	0.042886356	0.000191956	0.043078
7447041451	574470	4145170	0.043858624	0.00018933	0.044048
7448041451	574480	4145170	0.043436864	0.000189558	0.043626
7449041451	574490	4145170	0.043645524	0.000180917	0.043826
7450041451	574500	4145170	0.043001785	0.000162872	0.043165
7451041451	574510	4145170	0.041030611	0.000160206	0.041191
7452041451	574520	4145170	0.038380181	0.000155504	0.038536
7446041451	574460	4145180	0.034531064	0.000160486	0.034692
7447041451	574470	4145180	0.031143663	0.000152863	0.031297
7448041451	574480	4145180	0.017656215	0.00019821	0.017854
7449041451	574490	4145180	0.019427608	0.000193672	0.019621
7450041451	574500	4145180	0.022521996	0.000204039	0.022726
7451041451	574510	4145180	0.025949353	0.000223474	0.026173
7452041451	574520	4145180	0.029887262	0.000226511	0.030114
7453041451	574530	4145180	0.034118183	0.000219934	0.034338
7445041451	574450	4145190	0.038726468	0.000221654	0.038948
7446041451	574460	4145190	0.043814228	0.000222948	0.044037
7447041451	574470	4145190	0.049989686	0.000226267	0.050216
7448041451	574480	4145190	0.055028611	0.000221919	0.055251
7449041451	574490	4145190	0.057701239	0.00021493	0.057916
7450041451	574500	4145190	0.057976493	0.00021564	0.058192
7451041451	574510	4145190	0.057559172	0.000209153	0.057768
7452041451	574520	4145190	0.056578024	0.000188647	0.056767
7444041452	574440	4145200	0.053359328	0.000178905	0.053538
7445041452	574450	4145200	0.04877768	0.000174981	0.048953
7446041452	574460	4145200	0.043543414	0.000170825	0.043714
7447041452	574470	4145200	0.038291389	0.000164403	0.038456
7448041452	574480	4145200	0.018197844	0.000208939	0.018407
7449041452	574490	4145200	0.020390997	0.000214787	0.020606
7450041452	574500	4145200	0.023525341	0.000224639	0.02375
7451041452	574510	4145200	0.02756536	0.000238532	0.027804
7443041452	574430	4145210	0.032586527	0.000264968	0.032851
7444041452	574440	4145210	0.038642116	0.000269047	0.038911
7445041452	574450	4145210	0.044293703	0.000253704	0.044547
7446041452	574460	4145210	0.05312403	0.000260101	0.053384
7447041452	574470	4145210	0.062602536	0.000263658	0.062866
7448041452	574480	4145210	0.071859063	0.000263722	0.072123
7449041452	574490	4145210	0.078935756	0.000253991	0.07919
7450041452	574500	4145210	0.08143524	0.000250624	0.081686
7451041452	574510	4145210	0.080680512	0.000244378	0.080925
7443041452	574430	4145220	0.078762612	0.00021769	0.07898
7444041452	574440	4145220	0.072578276	0.000205334	0.072784
7445041452	574450	4145220	0.064373929	0.000194166	0.064568
7446041452	574460	4145220	0.055450371	0.000186785	0.055637
7447041452	574470	4145220	0.047068441	0.000177562	0.047246
7448041452	574480	4145220	0.018846023	0.000252979	0.019099
7449041452	574490	4145220	0.021287792	0.000239355	0.021527
7450041452	574500	4145220	0.024795062	0.000255055	0.02505
7451041452	574510	4145220	0.029407787	0.000301683	0.029709
7452041452	574520	4145220	0.035050495	0.000304419	0.035355
7453041452	574530	4145220	0.041336942	0.000285165	0.041622
7444041452	574440	4145230	0.051059625	0.000296866	0.051356
7445041452	574450	4145230	0.064729096	0.000313547	0.065043

Max GLC for Chronic Calcs

Max GLC: 0.567482

XY	X	Y	2025	2026	2027	2034	2035
57449041451	574490	4145130	0.0003379	0.0003084	0		
57448041451	574480	4145140	0.0003732	0.0003403	0		
57449041451	574490	4145140	0.0004261	0.0003882	0		
57449041451	574490	4145150	0.0004816	0.0004383	0		
57450041451	574500	4145150	0.0005507	0.000501	0		
57446041451	574460	4145160	0.0006133	0.0005572	0		
57449041451	574490	4145160	0.0006704	0.0006086	0		
57450041451	574500	4145160	0.0007334	0.0006654	0		
57451041451	574510	4145160	0.0008108	0.0007352	0		
57446041451	574460	4145170	0.0008642	0.0007832	0		
57447041451	574470	4145170	0.0008838	0.0008008	0		
57448041451	574480	4145170	0.0008753	0.0007932	0		
57449041451	574490	4145170	0.0008795	0.0007968	0		
57450041451	574500	4145170	0.0008665	0.0007847	0		
57451041451	574510	4145170	0.0008268	0.0007488	0		
57452041451	574520	4145170	0.0007734	0.0007006	0		
57446041451	574460	4145180	0.0006958	0.0006308	0		
57447041451	574470	4145180	0.0006275	0.0005691	0		
57448041451	574480	4145180	0.0003558	0.0003251	0		
57449041451	574490	4145180	0.0003915	0.0003572	0		
57450041451	574500	4145180	0.0004538	0.0004136	0		
57451041451	574510	4145180	0.0005229	0.0004763	0		
57452041451	574520	4145180	0.0006022	0.0005479	0		
57453041451	574530	4145180	0.0006875	0.0006246	0		
57445041451	574450	4145190	0.0007803	0.0007083	0		
57446041451	574460	4145190	0.0008829	0.0008008	0		
57447041451	574470	4145190	0.0010073	0.000913	0		
57448041451	574480	4145190	0.0011088	0.0010044	0		
57449041451	574490	4145190	0.0011627	0.0010528	0		
57450041451	574500	4145190	0.0011682	0.0010578	0		
57451041451	574510	4145190	0.0011598	0.0010501	0		
57452041451	574520	4145190	0.0011401	0.0010318	0		
57444041452	574440	4145200	0.0010752	0.0009732	0		
57445041452	574450	4145200	0.0009829	0.0008899	0		
57446041452	574460	4145200	0.0008774	0.0007947	0		
57447041452	574470	4145200	0.0007716	0.0006992	0		
57448041452	574480	4145200	0.0003667	0.0003352	0		
57449041452	574490	4145200	0.0004109	0.0003751	0		
57450041452	574500	4145200	0.000474	0.0004323	0		
57451041452	574510	4145200	0.0005554	0.000506	0		
57443041452	574430	4145210	0.0006566	0.0005978	0		
57444041452	574440	4145210	0.0007786	0.0007079	0		
57445041452	574450	4145210	0.0008925	0.0008102	0		
57446041452	574460	4145210	0.0010705	0.0009707	0		
57447041452	574470	4145210	0.0012614	0.0011429	0		
57448041452	574480	4145210	0.001448	0.0013111	0		
57449041452	574490	4145210	0.0015906	0.0014394	0		
57450041452	574500	4145210	0.0016409	0.0014847	0		
57451041452	574510	4145210	0.0016257	0.0014709	0		
57443041452	574430	4145220	0.0015871	0.0014354	0		
57444041452	574440	4145220	0.0014625	0.0013228	0		
57445041452	574450	4145220	0.0012971	0.0011736	0		
57446041452	574460	4145220	0.0011173	0.0010113	0		
57447041452	574470	4145220	0.0009484	0.0008589	0		
57448041452	574480	4145220	0.0003797	0.0003479	0		
57449041452	574490	4145220	0.000429	0.000392	0		
57450041452	574500	4145220	0.0004996	0.000456	0		
57451041452	574510	4145220	0.0005926	0.0005409	0		
57452041452	574520	4145220	0.0007063	0.0006434	0		
57453041452	574530	4145220	0.0008329	0.0007572	0		
57444041452	574440	4145230	0.0010289	0.000934	0		
57445041452	574450	4145230	0.0013043	0.0011827	0		

Garvey Reservoir Rehab - Unmitigated Junction Structure

Cancer Risk Summary & Maximum Annual GLC for Chronic Calculations

Cancer Risk Summary

Max Risk: 28.16465

XY	X	Y	Offroad Risk	Haul Risk	Total Risk
7446041452	574460	4145230	0.081288734	0.000316961	0.081606
7447041452	574470	4145230	0.09798156	0.000316007	0.098298
7448041452	574480	4145230	0.113480138	0.000309017	0.113789
7449041452	574490	4145230	0.124268321	0.000283383	0.124552
7450041452	574500	4145230	0.123575746	0.00028826	0.123864
7451041452	574510	4145230	0.118394755	0.000247919	0.118643
7452041452	574520	4145230	0.104916186	0.000237862	0.105154
7444041452	574440	4145240	0.088245558	0.000224004	0.08847
7445041452	574450	4145240	0.072049965	0.000209105	0.072259
7446041452	574460	4145240	0.058131878	0.000198994	0.058331
7447041452	574470	4145240	0.019281102	0.000283921	0.019565
7448041452	574480	4145240	0.022237863	0.000322535	0.02256
7449041452	574490	4145240	0.025847243	0.000313907	0.026161
7450041452	574500	4145240	0.030681947	0.000331402	0.031013
7451041452	574510	4145240	0.036591029	0.000313768	0.036905
7445041452	574450	4145250	0.044968519	0.000329989	0.045299
7446041452	574460	4145250	0.05810524	0.000361698	0.058467
7447041452	574470	4145250	0.076791438	0.000386264	0.077178
7448041452	574480	4145250	0.10254101	0.000381528	0.102923
7446041452	574460	4145260	0.136126443	0.000382052	0.136508
7447041452	574470	4145260	0.173671982	0.000382573	0.174055
7448041452	574480	4145260	0.206715786	0.000355945	0.207072
7447041452	574470	4145270	0.214618241	0.000349043	0.214967
7449041451	574490	4145130	0.194768873	0.000301214	0.19507
7448041451	574480	4145140	0.16086379	0.000277855	0.161142
7449041451	574490	4145140	0.12618622	0.000264428	0.126451
7449041451	574490	4145150	0.095144667	0.000236099	0.095381
7450041451	574500	4145150	0.07232078	0.00021525	0.072536
7446041451	574460	4145160	0.019551916	0.000313784	0.019866
7449041451	574490	4145160	0.022655184	0.000362427	0.023018
7450041451	574500	4145160	0.026584213	0.000383114	0.026967
7451041451	574510	4145160	0.031560984	0.000363536	0.031925
7446041451	574460	4145170	0.038144883	0.000359807	0.038505
7447041451	574470	4145170	0.396676592	0.000421844	0.397098
7448041451	574480	4145170	0.266681211	0.000332264	0.267013
7449041451	574490	4145170	0.164579719	0.00028009	0.16486
7450041451	574500	4145170	0.113093895	0.000247927	0.113342
7451041451	574510	4145170	0.088560768	0.000248338	0.088809
7452041451	574520	4145170	0.019560795	0.000328899	0.01989
7446041451	574460	4145180	0.022783931	0.000380076	0.023164
7447041451	574470	4145180	0.02682839	0.000411093	0.027239
7448041451	574480	4145180	0.031902831	0.000394979	0.032298
7449041451	574490	4145180	0.868386548	0.000497511	0.868884
7450041451	574500	4145180	0.42299443	0.000401771	0.423396
7451041451	574510	4145180	0.224833717	0.000333487	0.225167
7452041451	574520	4145180	0.161418738	0.000335929	0.161755
7453041451	574530	4145180	0.103784093	0.0003072	0.104091
7445041451	574450	4145190	0.019729499	0.000443384	0.020173
7446041451	574460	4145190	0.022704019	0.000420208	0.023124
7447041451	574470	4145190	0.026744038	0.000455999	0.0272
7448041451	574480	4145190	0.032173646	0.000493632	0.032667
7449041451	574490	4145190	3.812610336	0.000863369	3.813474
7450041451	574500	4145190	0.93856301	0.000682285	0.939245
7451041451	574510	4145190	0.376813905	0.000511882	0.377326
7452041451	574520	4145190	0.199763402	0.000399673	0.200163
7444041452	574440	4145200	0.12195086	0.000346425	0.122297
7445041452	574450	4145200	0.019578554	0.000534743	0.020113
7446041452	574460	4145200	0.022606348	0.000552307	0.023159
7447041452	574470	4145200	0.026601971	0.000601251	0.027203
7448041452	574480	4145200	0.031805161	0.000592027	0.032397
7449041452	574490	4145200	5.602782716	0.001888167	5.604671
7450041452	574500	4145200	1.232640877	0.000990481	1.233631

Max GLC for Chronic Calcs

Max GLC: 0.567482

XY	X	Y	2025	2026	2027	2034	2035
57446041452	574460	4145230	0.001638	0.0014835	0		
57447041452	574470	4145230	0.0019743	0.0017867	0		
57448041452	574480	4145230	0.0022866	0.0020681	0		
57449041452	574490	4145230	0.002504	0.0022634	0		
57450041452	574500	4145230	0.0024901	0.002251	0		
57451041452	574510	4145230	0.0023857	0.002156	0		
57452041452	574520	4145230	0.0021141	0.0019109	0		
57444041452	574440	4145240	0.0017782	0.0016078	0		
57445041452	574450	4145240	0.0014518	0.0013133	0		
57446041452	574460	4145240	0.0011714	0.0010603	0		
57447041452	574470	4145240	0.0003885	0.0003565	0		
57448041452	574480	4145240	0.0004481	0.0004111	0		
57449041452	574490	4145240	0.0005208	0.0004765	0		
57450041452	574500	4145240	0.0006182	0.0005647	0		
57451041452	574510	4145240	0.0007373	0.0006716	0		
57445041452	574450	4145250	0.0009061	0.0008241	0		
57446041452	574460	4145250	0.0011708	0.0010634	0		
57447041452	574470	4145250	0.0015474	0.0014034	0		
57448041452	574480	4145250	0.0020662	0.001871	0		
57446041452	574460	4145260	0.002743	0.002481	0		
57447041452	574470	4145260	0.0034995	0.003163	0		
57448041452	574480	4145260	0.0041653	0.0037626	0		
57447041452	574470	4145270	0.0043246	0.003906	0		
57449041451	574490	4145130	0.0039246	0.0035444	0		
57448041451	574480	4145140	0.0032414	0.002928	0		
57449041451	574490	4145140	0.0025427	0.0022979	0		
57449041451	574490	4145150	0.0019172	0.0017334	0		
57450041451	574500	4145150	0.0014573	0.0013184	0		
57446041451	574460	4145160	0.000394	0.0003621	0		
57449041451	574490	4145160	0.0004565	0.0004196	0		
57450041451	574500	4145160	0.0005357	0.0004914	0		
57451041451	574510	4145160	0.000636	0.0005813	0		
57446041451	574460	4145170	0.0007686	0.0007008	0		
57447041451	574470	4145170	0.0079931	0.0072144	0		
57448041451	574480	4145170	0.0053737	0.0048512	0		
57449041451	574490	4145170	0.0033163	0.0029956	0		
57450041451	574500	4145170	0.0022789	0.0020597	0		
57451041451	574510	4145170	0.0017845	0.0016141	0		
57452041451	574520	4145170	0.0003942	0.0003626	0		
57446041451	574460	4145180	0.0004591	0.0004223	0		
57447041451	574470	4145180	0.0005406	0.0004964	0		
57448041451	574480	4145180	0.0006428	0.0005882	0		
57449041451	574490	4145180	0.0174981	0.015784	0		
57450041451	574500	4145180	0.0085234	0.007692	0		
57451041451	574510	4145180	0.0045304	0.0040912	0		
57452041451	574520	4145180	0.0032526	0.0029394	0		
57453041451	574530	4145180	0.0020913	0.0018919	0		
57445041451	574450	4145190	0.0003976	0.0003682	0		
57446041451	574460	4145190	0.0004575	0.0004217	0		
57447041451	574470	4145190	0.0005389	0.0004959	0		
57448041451	574480	4145190	0.0006483	0.0005954	0		
57449041451	574490	4145190	0.0768245	0.0692694	0		
57450041451	574500	4145190	0.0189121	0.0170627	0		
57451041451	574510	4145190	0.0075928	0.0068556	0		
57452041451	574520	4145190	0.0040253	0.0036373	0		
57444041452	574440	4145200	0.0024573	0.0022228	0		
57445041452	574450	4145200	0.0003945	0.0003675	0		
57446041452	574460	4145200	0.0004555	0.0004229	0		
57447041452	574470	4145200	0.000536	0.0004966	0		
57448041452	574480	4145200	0.0006409	0.0005909	0		
57449041452	574490	4145200	0.1128967	0.101808	0		
57450041452	574500	4145200	0.0248378	0.0224111	0		

Garvey Reservoir Rehab - Unmitigated Junction Structure

Cancer Risk Summary & Maximum Annual GLC for Chronic Calculations

Cancer Risk Summary

Max Risk: 28.16465

XY	X	Y	Offroad Risk	Haul Risk	Total Risk
7451041452(	574510	4145200	0.464255899	0.00067592	0.464932
7443041452:	574430	4145210	0.239919415	0.000498438	0.240418
7444041452:	574440	4145210	0.13838175	0.000408989	0.138791
7445041452:	574450	4145210	0.019032485	0.000635985	0.019668
7446041452:	574460	4145210	0.022113555	0.000625858	0.022739
7447041452:	574470	4145210	0.025949353	0.000702559	0.026652
7448041452:	574480	4145210	0.030957201	0.00072702	0.031684
7449041452:	574490	4145210	1.898609154	0.015006687	1.913616
7450041452:	574500	4145210	1.950259243	0.002945821	1.953205
7451041452:	574510	4145210	1.022169205	0.001344858	1.023514
7443041452:	574430	4145220	0.474391463	0.000842668	0.475234
7444041452:	574440	4145220	0.254645506	0.000603635	0.255249
7445041452:	574450	4145220	0.157804918	0.000464707	0.15827
7446041452:	574460	4145220	0.017296609	0.000749516	0.018046
7447041452:	574470	4145220	0.021500892	0.000780439	0.022281
7448041452:	574480	4145220	0.025065876	0.000871357	0.025937
7449041452:	574490	4145220	0.029736316	0.000940092	0.030676
7450041452:	574500	4145220	0.459185897	0.023558733	0.482745
7451041452:	574510	4145220	0.748295873	0.010595996	0.758892
7452041452:	574520	4145220	0.857087813	0.00341908	0.860507
7453041452:	574530	4145220	0.658869386	0.001641429	0.660511
7444041452:	574440	4145230	0.416818972	0.000994938	0.417814
7445041452:	574450	4145230	0.255715445	0.000699457	0.256415
7446041452:	574460	4145230	0.167949362	0.000503145	0.168453
7447041452:	574470	4145230	0.016657309	0.000919555	0.017577
7448041452:	574480	4145230	0.020541943	0.000990996	0.021533
7449041452:	574490	4145230	0.02301035	0.001098428	0.024109
7450041452:	574500	4145230	0.028160264	0.001229985	0.02939
7451041452:	574510	4145230	0.183301434	0.004378619	0.18768
7452041452:	574520	4145230	0.280004394	0.023913414	0.303918
7444041452(	574440	4145240	0.39150004	0.009688413	0.401188
7445041452(	574450	4145240	0.443851583	0.003150906	0.447002
7446041452(	574460	4145240	0.405236105	0.001883458	0.40712
7447041452(	574470	4145240	0.305363283	0.001168739	0.306532
7448041452(	574480	4145240	0.221046754	0.00073941	0.221786
7449041452(	574490	4145240	0.155567369	0.000576419	0.156144
7450041452(	574500	4145240	0.017363203	0.001170091	0.018533
7451041452(	574510	4145240	0.01791815	0.00131898	0.019237
7445041452:	574450	4145250	0.020550822	0.001423011	0.021974
7446041452:	574460	4145250	0.02640219	0.001708758	0.028111
7447041452:	574470	4145250	0.030779617	0.001673482	0.032453
7448041452:	574480	4145250	0.057732316	0.002141556	0.059874
7446041452(	574460	4145260	0.07443846	0.002486635	0.076925
7447041452(	574470	4145260	0.098381122	0.003073221	0.101454
7448041452(	574480	4145260	0.134967712	0.005261813	0.14023
7447041452:	574470	4145270	0.184451286	0.023197761	0.207649
7449041451:	574490	4145130	0.240039283	0.009716595	0.249756
7448041451(	574480	4145140	0.263018556	0.003113409	0.266132
7449041451(	574490	4145140	0.264665641	0.001863694	0.266529
7449041451:	574490	4145150	0.224713849	0.001239002	0.225953
7450041451:	574500	4145150	0.174590975	0.000881715	0.175473
7446041451(	574460	4145160	0.133653596	0.000643776	0.134297
7449041451(	574490	4145160	0.016559638	0.002055559	0.018615
7450041451(	574500	4145160	0.018730594	0.00234681	0.021077
7451041451(	574510	4145160	0.019649587	0.002278778	0.021928
7446041451:	574460	4145170	0.024542006	0.002797621	0.02734
7447041451:	574470	4145170	0.028599783	0.002828144	0.031428
7448041451:	574480	4145170	0.033794093	0.002887402	0.036681
7449041451:	574490	4145170	0.040515619	0.002996358	0.043512
7450041451:	574500	4145170	0.049599003	0.003327701	0.052927
7451041451:	574510	4145170	0.06192772	0.003642527	0.06557
7452041451:	574520	4145170	0.078926877	0.004225297	0.083152

Max GLC for Chronic Calcs

Max GLC: 0.567482

XY	X	Y	2025	2026	2027	2034	2035
574510414520	574510	4145200	0.0093548	0.0084475	0		
574430414521	574430	4145210	0.0048344	0.0043689	0		
574440414521	574440	4145210	0.0027884	0.0025226	0		
574450414521	574450	4145210	0.0003835	0.0003598	0		
574460414521	574460	4145210	0.0004456	0.0004156	0		
574470414521	574470	4145210	0.0005229	0.000487	0		
574480414521	574480	4145210	0.0006238	0.0005785	0		
574490414521	574490	4145210	0.0382572	0.034819	0		
574500414521	574500	4145210	0.0392979	0.035489	0		
574510414521	574510	4145210	0.0205968	0.018596	0		
574430414522	574430	4145220	0.009559	0.0086353	0		
574440414522	574440	4145220	0.0051311	0.0046387	0		
574450414522	574450	4145220	0.0031798	0.0028766	0		
574460414522	574460	4145220	0.0003485	0.0003308	0		
574470414522	574470	4145220	0.0004332	0.0004079	0		
574480414522	574480	4145220	0.0005051	0.0004747	0		
574490414522	574490	4145220	0.0005992	0.000561	0		
574500414522	574500	4145220	0.0092526	0.0088643	0		
574510414522	574510	4145220	0.0150782	0.0138273	0		
574520414522	574520	4145220	0.0172704	0.0156437	0		
574530414522	574530	4145220	0.0132763	0.0120039	0		
574440414523	574440	4145230	0.0083989	0.007593	0		
574450414523	574450	4145230	0.0051527	0.0046602	0		
574460414523	574460	4145230	0.0033842	0.0030617	0		
574470414523	574470	4145230	0.0003356	0.000323	0		
574480414523	574480	4145230	0.0004139	0.0003951	0		
574490414523	574490	4145230	0.0004637	0.0004424	0		
574500414523	574500	4145230	0.0005674	0.0005388	0		
574510414523	574510	4145230	0.0036935	0.0034268	0		
574520414523	574520	4145230	0.0056421	0.0056176	0		
574440414524	574440	4145240	0.0078888	0.0073264	0		
574450414524	574450	4145240	0.0089437	0.008132	0		
574460414524	574460	4145240	0.0081655	0.0074024	0		
574470414524	574470	4145240	0.0061531	0.0055724	0		
574480414524	574480	4145240	0.0044541	0.0040314	0		
574490414524	574490	4145240	0.0031347	0.0028385	0		
574500414524	574500	4145240	0.0003499	0.0003414	0		
574510414524	574510	4145240	0.0003611	0.0003548	0		
574450414525	574450	4145250	0.0004141	0.0004049	0		
574460414525	574460	4145250	0.000532	0.0005176	0		
574470414525	574470	4145250	0.0006202	0.0005963	0		
574480414525	574480	4145250	0.0011633	0.0010962	0		
574460414526	574460	4145260	0.0014999	0.0014074	0		
574470414526	574470	4145260	0.0019824	0.0018553	0		
574480414526	574480	4145260	0.0027196	0.0025685	0		
574470414527	574470	4145270	0.0037167	0.0038661	0		
574490414513	574490	4145130	0.0048368	0.004576	0		
574480414514	574480	4145140	0.0052999	0.0048466	0		
574490414514	574490	4145140	0.005333	0.0048487	0		
574490414515	574490	4145150	0.004528	0.0041091	0		
574500414515	574500	4145150	0.003518	0.0031908	0		
574460414516	574460	4145160	0.0026931	0.0024419	0		
574490414516	574490	4145160	0.0003337	0.0003465	0		
574500414516	574500	4145160	0.0003774	0.0003924	0		
574510414516	574510	4145160	0.0003959	0.0004076	0		
574460414517	574460	4145170	0.0004945	0.000508	0		
574470414517	574470	4145170	0.0005763	0.0005824	0		
574480414517	574480	4145170	0.000681	0.000678	0		
574490414517	574490	4145170	0.0008164	0.0008025	0		
574500414517	574500	4145170	0.0009994	0.0009749	0		
574510414517	574510	4145170	0.0012479	0.0012058	0		
574520414517	574520	4145170	0.0015904	0.0015275	0		

Garvey Reservoir Rehab - Unmitigated Junction Structure

Cancer Risk Summary & Maximum Annual GLC for Chronic Calculations

Cancer Risk Summary

Max Risk: 28.16465

XY	X	Y	Offroad Risk	Haul Risk	Total Risk
7446041451	574460	4145180	0.101146981	0.006631688	0.107779
7447041451	574470	4145180	0.161458694	0.008818737	0.170277
7448041451	574480	4145180	0.182027274	0.003553107	0.18558
7449041451	574490	4145180	0.183003982	0.001937619	0.184942
7450041451	574500	4145180	0.16595155	0.001269497	0.167221
7451041451	574510	4145180	0.1387014	0.00093636	0.139638
7452041451	574520	4145180	0.11251231	0.000687559	0.1132
7453041451	574530	4145180	0.01580491	0.005968756	0.021774
7445041451	574450	4145190	0.017669534	0.007416603	0.025086
7446041451	574460	4145190	0.018934814	0.005437201	0.024372
7447041451	574470	4145190	0.022752854	0.007104902	0.029858
7448041451	574480	4145190	0.02608254	0.007608402	0.033691
7449041451	574490	4145190	0.030335659	0.007605733	0.037941
7450041451	574500	4145190	0.035831861	0.007867732	0.0437
7451041451	574510	4145190	0.042961829	0.008179879	0.051142
7452041451	574520	4145190	0.052147322	0.008381608	0.060529
7444041452	574440	4145200	0.063987686	0.009029623	0.073017
7445041452	574450	4145200	0.078389688	0.010873893	0.089264
7446041452	574460	4145200	0.096769554	0.03468237	0.131452
7447041452	574470	4145200	0.114878606	0.012050601	0.126929
7448041452	574480	4145200	0.127704557	0.004238461	0.131943
7449041452	574490	4145200	0.13095433	0.002273198	0.133228
7450041452	574500	4145200	0.123762209	0.001429657	0.125192
7451041452	574510	4145200	0.10932469	0.000978759	0.110303
7443041452	574430	4145210	0.093195691	0.000712475	0.093908
7444041452	574440	4145210	0.014921433	0.024030832	0.038952
7445041452	574450	4145210	0.016657309	0.030949091	0.047606
7446041452	574460	4145210	0.018579648	0.030305345	0.048885
7447041452	574470	4145210	0.021074693	0.033383659	0.054458
7448041452	574480	4145210	0.023938223	0.031485422	0.055424
7449041452	574490	4145210	0.027401096	0.034207067	0.061608
7450041452	574500	4145210	0.031929469	0.033107247	0.065037
7451041452	574510	4145210	0.038016135	0.032160327	0.070176
7443041452	574430	4145220	0.044999596	0.030924808	0.075924
7444041452	574440	4145220	0.053035239	0.031264222	0.084299
7445041452	574450	4145220	0.062846713	0.032133262	0.09498
7446041452	574460	4145220	0.074620483	0.033758578	0.108379
7447041452	574470	4145220	0.08567948	0.016598791	0.102278
7448041452	574480	4145220	0.094416576	0.004442144	0.098859
7449041452	574490	4145220	0.097963802	0.002271457	0.100235
7450041452	574500	4145220	0.094527566	0.001408962	0.095937
7451041452	574510	4145220	0.086753859	0.000973939	0.087728
7452041452	574520	4145220	0.077128846	0.00072083	0.07785
7453041452	574530	4145220	0.0282091	0.000323964	0.028533
7444041452	574440	4145230	0.030770738	0.000331704	0.031102
7445041452	574450	4145230	0.033465564	0.000309173	0.033775
7446041452	574460	4145230	0.036875163	0.000318111	0.037193
7447041452	574470	4145230	0.03997399	0.000305519	0.04028
7448041452	574480	4145230	0.044346978	0.000312636	0.04466
7449041452	574490	4145230	0.050549073	0.000326734	0.050876
7450041452	574500	4145230	0.0564182	0.000329481	0.056748
7451041452	574510	4145230	0.06457815	0.000348048	0.064926
7452041452	574520	4145230	0.074074414	0.000358184	0.074433
7444041452	574440	4145240	0.084463035	0.000357195	0.08482
7445041452	574450	4145240	0.096205727	0.000354823	0.096561
7446041452	574460	4145240	0.109027238	0.000353329	0.109381
7447041452	574470	4145240	0.122279389	0.000355133	0.122635
7448041452	574480	4145240	0.135549297	0.000355567	0.135905
7449041452	574490	4145240	0.148592787	0.000350891	0.148944
7450041452	574500	4145240	0.159753895	0.000343446	0.160097
7451041452	574510	4145240	0.168766245	0.00032391	0.16909
7445041452	574450	4145250	0.171634214	0.00032404	0.171958

Max GLC for Chronic Calcs

Max GLC: 0.567482

XY	X	Y	2025	2026	2027	2034	2035
574460414518	574460	4145180	0.0020381	0.0019846	0		
574470414518	574470	4145180	0.0032534	0.0031288	0		
574480414518	574480	4145180	0.0036679	0.0033853	0		
574490414518	574490	4145180	0.0036875	0.0033671	0		
574500414518	574500	4145180	0.0033439	0.0030425	0		
574510414518	574510	4145180	0.0027948	0.0025401	0		
574520414518	574520	4145180	0.0022671	0.0020589	0		
574530414518	574530	4145180	0.0003185	0.0004198	0		
574450414519	574450	4145190	0.000356	0.0004859	0		
574460414519	574460	4145190	0.0003815	0.0004648	0		
574470414519	574470	4145190	0.0004585	0.0005713	0		
574480414519	574480	4145190	0.0005256	0.0006429	0		
574490414519	574490	4145190	0.0006113	0.0007201	0		
574500414519	574500	4145190	0.000722	0.0008258	0		
574510414519	574510	4145190	0.0008657	0.0009622	0		
574520414519	574520	4145190	0.0010508	0.0011336	0		
574440414520	574440	4145200	0.0012894	0.001363	0		
574450414520	574450	4145200	0.0015796	0.0016656	0		
574460414520	574460	4145200	0.0019499	0.0025289	0		
574470414520	574470	4145200	0.0023148	0.0023546	0		
574480414520	574480	4145200	0.0025733	0.0024138	0		
574490414520	574490	4145200	0.0026387	0.0024291	0		
574500414520	574500	4145200	0.0024938	0.0022797	0		
574510414520	574510	4145200	0.0022029	0.0020075	0		
574430414521	574430	4145210	0.0018779	0.0017086	0		
574440414521	574440	4145210	0.0003007	0.0008054	0		
574450414521	574450	4145210	0.0003356	0.0009908	0		
574460414521	574460	4145210	0.0003744	0.0010114	0		
574470414521	574470	4145210	0.0004247	0.0011251	0		
574480414521	574480	4145210	0.0004824	0.0011349	0		
574490414521	574490	4145210	0.0005521	0.0012584	0		
574500414521	574500	4145210	0.0006434	0.0013162	0		
574510414521	574510	4145210	0.000766	0.0014057	0		
574430414522	574430	4145220	0.0009067	0.001505	0		
574440414522	574440	4145220	0.0010687	0.0016585	0		
574450414522	574450	4145220	0.0012664	0.0018561	0		
574460414522	574460	4145220	0.0015036	0.0021061	0		
574470414522	574470	4145220	0.0017265	0.0019253	0		
574480414522	574480	4145220	0.0019025	0.0018137	0		
574490414522	574490	4145220	0.001974	0.0018299	0		
574500414522	574500	4145220	0.0019047	0.0017483	0		
574510414522	574510	4145220	0.0017481	0.0015974	0		
574520414522	574520	4145220	0.0015542	0.001417	0		
574530414522	574530	4145220	0.0005684	0.0005196	0		
574440414523	574440	4145230	0.00062	0.0005663	0		
574450414523	574450	4145230	0.0006743	0.0006147	0		
574460414523	574460	4145230	0.000743	0.0006769	0		
574470414523	574470	4145230	0.0008055	0.0007329	0		
574480414523	574480	4145230	0.0008936	0.0008124	0		
574490414523	574490	4145230	0.0010186	0.0009254	0		
574500414523	574500	4145230	0.0011368	0.0010321	0		
574510414523	574510	4145230	0.0013013	0.0011807	0		
574520414523	574520	4145230	0.0014926	0.0013534	0		
574440414524	574440	4145240	0.0017019	0.0015421	0		
574450414524	574450	4145240	0.0019386	0.0017553	0		
574460414524	574460	4145240	0.0021969	0.0019882	0		
574470414524	574470	4145240	0.0024639	0.0022289	0		
574480414524	574480	4145240	0.0027313	0.00247	0		
574490414524	574490	4145240	0.0029942	0.0027068	0		
574500414524	574500	4145240	0.0032191	0.0029093	0		
574510414524	574510	4145240	0.0034007	0.0030726	0		
574450414525	574450	4145250	0.0034584	0.0031247	0		

Garvey Reservoir Rehab - Unmitigated Junction Structure

Cancer Risk Summary & Maximum Annual GLC for Chronic Calculations

Cancer Risk Summary

Max Risk: 28.16465

XY	X	Y	Offroad Risk	Haul Risk	Total Risk
7446041452	574460	4145250	0.169805107	0.000322966	0.170128
7447041452	574470	4145250	0.165068073	0.00031429	0.165382
7448041452	574480	4145250	0.15852857	0.000277676	0.158806
7446041452	574460	4145260	0.147327506	0.00026843	0.147596
7447041452	574470	4145260	0.028724091	0.000346068	0.02907
7448041452	574480	4145260	0.03128129	0.000333404	0.031615
7447041452	574470	4145270	0.034095985	0.000315764	0.034412
7449041451	574490	4145130	0.037305802	0.000319586	0.037625
7448041451	574480	4145140	0.041332502	0.000328	0.041661
7449041451	574490	4145140	0.046389185	0.000337849	0.046727
7449041451	574490	4145150	0.053061876	0.000364428	0.053426
7450041451	574500	4145150	0.060209602	0.000373289	0.060583
7446041451	574460	4145160	0.069328502	0.000390013	0.069719
7449041451	574490	4145160	0.080081168	0.000395585	0.080477
7450041451	574500	4145160	0.092769491	0.000395406	0.093165
7451041451	574510	4145160	0.10794842	0.00039054	0.108339
7446041451	574460	4145170	0.12544925	0.000388357	0.125838
7447041451	574470	4145170	0.144934572	0.000391994	0.145327
7448041451	574480	4145170	0.165623021	0.000394829	0.166018
7449041451	574490	4145170	0.186764307	0.000393055	0.187157
7450041451	574500	4145170	0.206183036	0.000388134	0.206571
7451041451	574510	4145170	0.223337578	0.000366648	0.223704
7452041451	574520	4145170	0.231657354	0.00035774	0.232015
7446041451	574460	4145180	0.230498623	0.000358883	0.230858
7447041451	574470	4145180	0.222134452	0.000351535	0.222486
7448041451	574480	4145180	0.204722414	0.000306333	0.205029
7449041451	574490	4145180	0.188824273	0.00029711	0.189121
7450041451	574500	4145180	0.02916361	0.000369477	0.029533
7451041451	574510	4145180	0.031898392	0.000367126	0.032266
7452041451	574520	4145180	0.034597657	0.000332945	0.034931
7453041451	574530	4145180	0.038215916	0.000342505	0.038558
7445041451	574450	4145190	0.042580025	0.000352824	0.042933
7446041451	574460	4145190	0.048786559	0.000393538	0.04918
7447041451	574470	4145190	0.055508085	0.000412262	0.05592
7448041451	574480	4145190	0.063565925	0.000423066	0.063989
7449041451	574490	4145190	0.073541665	0.000433612	0.073975
7450041451	574500	4145190	0.085857063	0.000438703	0.086296
7451041451	574510	4145190	0.101018234	0.000440026	0.101458
7452041451	574520	4145190	0.119819861	0.000435493	0.120255
7444041452	574440	4145200	0.142630429	0.000432017	0.143062
7445041452	574450	4145200	0.170550956	0.000441339	0.170992
7446041452	574460	4145200	0.201801169	0.000449452	0.202251
7447041452	574470	4145200	0.238343363	0.000443511	0.238787
7448041452	574480	4145200	0.275729078	0.000426398	0.276155
7449041452	574490	4145200	0.305540866	0.000403924	0.305945
7450041452	574500	4145200	0.317834067	0.000385088	0.318219
7451041452	574510	4145200	0.330504632	0.000400597	0.330905
7443041452	574430	4145210	0.290091123	0.000377607	0.290469
7444041452	574440	4145210	0.246423401	0.000322726	0.246746
7445041452	574450	4145210	0.029487699	0.000390694	0.029878
7446041452	574460	4145210	0.031938348	0.000347347	0.032286
7447041452	574470	4145210	0.035157045	0.000356476	0.035514
7448041452	574480	4145210	0.039219261	0.00037262	0.039592
7449041452	574490	4145210	0.421751347	0.000409681	0.422161
7450041452	574500	4145210	0.320124891	0.000356009	0.320481
7451041452	574510	4145210	0.029718557	0.00041476	0.030133
7443041452	574430	4145220	0.032249119	0.000372807	0.032622
7444041452	574440	4145220	0.035667596	0.000386161	0.036054
7445041452	574450	4145220	0.572923531	0.000435297	0.573359
7446041452	574460	4145220	0.441059086	0.000397922	0.441457
7447041452	574470	4145220	0.029638645	0.000406906	0.030046
7448041452	574480	4145220	0.032493296	0.000405144	0.032898

Max GLC for Chronic Calcs

Max GLC: 0.567482

XY	X	Y	2025	2026	2027	2034	2035
57446041452	574460	4145250	0.0034216	0.0030914	0		
57447041452	574470	4145250	0.0033261	0.0030052	0		
57448041452	574480	4145250	0.0031944	0.0028856	0		
57446041452	574460	4145260	0.0029687	0.0026819	0		
57447041452	574470	4145260	0.0005788	0.0005294	0		
57448041452	574480	4145260	0.0006303	0.0005756	0		
57447041452	574470	4145270	0.000687	0.0006263	0		
57449041451	574490	4145130	0.0007517	0.0006847	0		
57448041451	574480	4145140	0.0008329	0.000758	0		
57449041451	574490	4145140	0.0009347	0.0008501	0		
57449041451	574490	4145150	0.0010692	0.0009719	0		
57450041451	574500	4145150	0.0012132	0.0011019	0		
57446041451	574460	4145160	0.001397	0.0012679	0		
57449041451	574490	4145160	0.0016136	0.0014633	0		
57450041451	574500	4145160	0.0018693	0.0016938	0		
57451041451	574510	4145160	0.0021752	0.0019694	0		
57446041451	574460	4145170	0.0025278	0.0022872	0		
57447041451	574470	4145170	0.0029204	0.0026412	0		
57448041451	574480	4145170	0.0033373	0.0030171	0		
57449041451	574490	4145170	0.0037633	0.003401	0		
57450041451	574500	4145170	0.0041546	0.0037536	0		
57451041451	574510	4145170	0.0045003	0.0040647	0		
57452041451	574520	4145170	0.0046679	0.0042157	0		
57446041451	574460	4145180	0.0046446	0.0041946	0		
57447041451	574470	4145180	0.004476	0.0040426	0		
57448041451	574480	4145180	0.0041252	0.0037253	0		
57449041451	574490	4145180	0.0038048	0.0034363	0		
57450041451	574500	4145180	0.0005876	0.0005379	0		
57451041451	574510	4145180	0.0006428	0.0005875	0		
57452041451	574520	4145180	0.0006971	0.0006358	0		
57453041451	574530	4145180	0.0007701	0.0007018	0		
57445041451	574450	4145190	0.000858	0.0007812	0		
57446041451	574460	4145190	0.0009831	0.0008949	0		
57447041451	574470	4145190	0.0011185	0.0010174	0		
57448041451	574480	4145190	0.0012809	0.001164	0		
57449041451	574490	4145190	0.0014819	0.0013454	0		
57450041451	574500	4145190	0.00173	0.0015692	0		
57451041451	574510	4145190	0.0020355	0.0018446	0		
57452041451	574520	4145190	0.0024144	0.002186	0		
57444041452	574440	4145200	0.002874	0.0026003	0		
57445041452	574450	4145200	0.0034366	0.0031076	0		
57446041452	574460	4145200	0.0040663	0.0036754	0		
57447041452	574470	4145200	0.0048026	0.004339	0		
57448041452	574480	4145200	0.005556	0.0050177	0		
57449041452	574490	4145200	0.0061567	0.0055587	0		
57450041452	574500	4145200	0.0064044	0.0057815	0		
57451041452	574510	4145200	0.0066597	0.006012	0		
57443041452	574430	4145210	0.0058454	0.0052775	0		
57444041452	574440	4145210	0.0049655	0.0044831	0		
57445041452	574450	4145210	0.0005942	0.0005443	0		
57446041452	574460	4145210	0.0006436	0.0005878	0		
57447041452	574470	4145210	0.0007084	0.0006465	0		
57448041452	574480	4145210	0.0007903	0.0007206	0		
57449041452	574490	4145210	0.0084983	0.0076696	0		
57450041452	574500	4145210	0.0064506	0.0058225	0		
57451041452	574510	4145210	0.0005988	0.000549	0		
57443041452	574430	4145220	0.0006498	0.000594	0		
57444041452	574440	4145220	0.0007187	0.0006564	0		
57445041452	574450	4145220	0.0115445	0.010416	0		
57446041452	574460	4145220	0.0088874	0.00802	0		
57447041452	574470	4145220	0.0005972	0.0005474	0		
57448041452	574480	4145220	0.0006547	0.0005992	0		

Garvey Reservoir Rehab - Unmitigated Junction Structure

Cancer Risk Summary & Maximum Annual GLC for Chronic Calculations

Cancer Risk Summary

Max Risk: 28.16465

XY	X	Y	Offroad Risk	Haul Risk	Total Risk
7449041452	574490	4145220	0.899880938	0.000500257	0.900381
7450041452	574500	4145220	0.621687892	0.000453398	0.622141
7451041452	574510	4145220	0.02968748	0.000438666	0.030126
7452041452	574520	4145220	0.032662	0.000453264	0.033115
7453041452	574530	4145220	1.847021219	0.000667872	1.847689
7444041452	574440	4145230	1.123569243	0.000624968	1.124194
7445041452	574450	4145230	0.02969192	0.000483747	0.030176
7446041452	574460	4145230	0.032719714	0.000508439	0.033228
7447041452	574470	4145230	3.698513096	0.00089895	3.699412
7448041452	574480	4145230	1.707676079	0.000827902	1.708504
7449041452	574490	4145230	0.029771832	0.000602362	0.030374
7450041452	574500	4145230	0.03255545	0.000554851	0.03311
7451041452	574510	4145230	28.16274166	0.001907114	28.16465
7452041452	574520	4145230	5.663360803	0.001381641	5.664742
7444041452	574440	4145240	2.116095364	0.001042479	2.117138
7445041452	574450	4145240	0.029496578	0.000648957	0.030146
7446041452	574460	4145240	0.032266877	0.000607393	0.032874
7447041452	574470	4145240	8.84682475	0.011304326	8.858129
7448041452	574480	4145240	7.957421224	0.003265247	7.960686
7449041452	574490	4145240	4.385276371	0.001870926	4.387147
7450041452	574500	4145240	2.110643558	0.001288176	2.111932
7451041452	574510	4145240	0.029123654	0.000702376	0.029826
7445041452	574450	4145250	0.031853996	0.000671622	0.032526
7446041452	574460	4145250	3.354019343	0.016467815	3.370487
7447041452	574470	4145250	3.163081829	0.004187698	3.16727
7448041452	574480	4145250	2.380667774	0.002257878	2.382926
7446041452	574460	4145260	1.560819169	0.00153162	1.562351
7447041452	574470	4145260	0.02862642	0.000751844	0.029378
7448041452	574480	4145260	0.031334565	0.000748278	0.032083
7447041452	574470	4145270	1.256641254	0.043626794	1.300268
7457041450	574570	4145030	1.736364654	0.011548684	1.747913
7463041450	574630	4145080	1.960563511	0.005089894	1.965653
7461041450	574610	4145090	1.741154962	0.002805992	1.743961
7462041450	574620	4145090	1.298852793	0.001820667	1.300673
7463041450	574630	4145090	0.028129187	0.00085192	0.028981
7464041450	574640	4145090	0.030726342	0.000845564	0.031572
7460041451	574600	4145100	0.033878445	0.000901374	0.03478
7461041451	574610	4145100	0.604577746	0.035443855	0.640022
7462041451	574620	4145100	0.826081777	0.026129281	0.852211
7463041451	574630	4145100	1.055288482	0.009624535	1.064913
7464041451	574640	4145100	1.183983066	0.005060636	1.189044
7465041451	574650	4145100	1.139458505	0.00304326	1.142502
7459041451	574590	4145110	0.967535718	0.002021859	0.969558
7460041451	574600	4145110	0.027512086	0.000946702	0.028459
7461041451	574610	4145110	0.03001157	0.00096364	0.030975
7462041451	574620	4145110	0.032990529	0.001010023	0.034001
7463041451	574630	4145110	0.345909979	0.008520632	0.354431
7464041451	574640	4145110	0.451363355	0.033748617	0.485112
7465041451	574650	4145110	0.579711651	0.026137997	0.60585
7466041451	574660	4145110	0.706248598	0.009265069	0.715514
7460041451	574600	4145120	0.783590544	0.005069193	0.78866
7461041451	574610	4145120	0.781290841	0.003205485	0.784496
7462041451	574620	4145120	0.706590446	0.002201757	0.708792
7463041451	574630	4145120	0.026886105	0.001074463	0.027961
7464041451	574640	4145120	0.029230203	0.001106494	0.030337
7465041451	574650	4145120	0.032013821	0.001146382	0.03316
7466041451	574660	4145120	0.218724853	0.004590349	0.223315
7460041451	574600	4145130	0.277913352	0.008938642	0.286852
7462041451	574620	4145130	0.34760146	0.033915546	0.381517
7463041451	574630	4145130	0.42627972	0.025519717	0.451799
7464041451	574640	4145130	0.503546194	0.008564326	0.512111
7465041451	574650	4145130	0.558082011	0.00468651	0.562769

Max GLC for Chronic Calcs

Max GLC: 0.567482

XY	X	Y	2025	2026	2027	2034	2035
57449041452	574490	4145220	0.0181327	0.0163561	0		
57450041452	574500	4145220	0.0125271	0.0113021	0		
57451041452	574510	4145220	0.0005982	0.000549	0		
57452041452	574520	4145220	0.0006581	0.0006033	0		
57453041452	574530	4145220	0.0372177	0.0335632	0		
57444041452	574440	4145230	0.02264	0.0204218	0		
57445041452	574450	4145230	0.0005983	0.0005501	0		
57446041452	574460	4145230	0.0006593	0.0006056	0		
57447041452	574470	4145230	0.0745254	0.0671978	0		
57448041452	574480	4145230	0.0344099	0.0310357	0		
57449041452	574490	4145230	0.0005999	0.0005542	0		
57450041452	574500	4145230	0.000656	0.0006037	0		
57451041452	574510	4145230	0.5674822	0.5115756	0		
57452041452	574520	4145230	0.1141173	0.102897	0		
57444041452	574440	4145240	0.0426395	0.0384588	0		
57445041452	574450	4145240	0.0005944	0.0005502	0		
57446041452	574460	4145240	0.0006502	0.0005996	0		
57447041452	574470	4145240	0.1782644	0.1609404	0		
57448041452	574480	4145240	0.1603429	0.144607	0		
57449041452	574490	4145240	0.0883638	0.0796935	0		
57450041452	574500	4145240	0.0425297	0.0383653	0		
57451041452	574510	4145240	0.0005868	0.0005446	0		
57445041452	574450	4145250	0.0006419	0.0005935	0		
57446041452	574460	4145250	0.0675838	0.0612868	0		
57447041452	574470	4145250	0.0637364	0.0575457	0		
57448041452	574480	4145250	0.0479707	0.0432914	0		
57446041452	574460	4145260	0.0314507	0.028384	0		
57447041452	574470	4145260	0.0005768	0.0005367	0		
57448041452	574480	4145260	0.0006314	0.0005858	0		
57447041452	574470	4145270	0.0253215	0.0237951	0		
57457041450	574570	4145030	0.0349879	0.0317952	0		
57463041450	574630	4145080	0.0395056	0.0357238	0		
57461041450	574610	4145090	0.0350845	0.0316878	0		
57462041450	574620	4145090	0.026172	0.0236322	0		
57463041450	574630	4145090	0.0005668	0.0005299	0		
57464041450	574640	4145090	0.0006191	0.0005769	0		
57460041451	574600	4145100	0.0006827	0.0006354	0		
57461041451	574610	4145100	0.0121823	0.0117694	0		
57462041451	574620	4145100	0.0166456	0.0155856	0		
57463041451	574630	4145100	0.0212642	0.0193817	0		
57464041451	574640	4145100	0.0238574	0.0216178	0		
57465041451	574650	4145100	0.0229602	0.0207642	0		
57459041451	574590	4145110	0.0194959	0.0176188	0		
57460041451	574600	4145110	0.0005544	0.0005208	0		
57461041451	574610	4145110	0.0006047	0.0005665	0		
57462041451	574620	4145110	0.0006648	0.0006217	0		
57463041451	574630	4145110	0.0069701	0.0064724	0		
57464041451	574640	4145110	0.009095	0.0089488	0		
57465041451	574650	4145110	0.0116813	0.0111108	0		
57466041451	574660	4145110	0.014231	0.013034	0		
57460041451	574600	4145120	0.0157894	0.0143455	0		
57461041451	574610	4145120	0.0157431	0.0142622	0		
57462041451	574620	4145120	0.0142379	0.0128831	0		
57463041451	574630	4145120	0.0005418	0.0005122	0		
57464041451	574640	4145120	0.000589	0.0005555	0		
57465041451	574650	4145120	0.0006451	0.000607	0		
57466041451	574660	4145120	0.0044073	0.0040749	0		
57460041451	574600	4145130	0.0056	0.0052466	0		
57462041451	574620	4145130	0.0070042	0.0070678	0		
57463041451	574630	4145130	0.0085896	0.0083102	0		
57464041451	574640	4145130	0.0101465	0.0093366	0		
57465041451	574650	4145130	0.0112454	0.0102409	0		

Garvey Reservoir Rehab - Unmitigated Junction Structure

Cancer Risk Summary & Maximum Annual GLC for Chronic Calculations

Cancer Risk Summary

Max Risk: 28.16465

XY	X	Y	Offroad Risk	Haul Risk	Total Risk
7463041451	574630	4145140	0.565451716	0.003318613	0.56877
7464041451	574640	4145140	0.531879602	0.002330594	0.53421
7459041451	574590	4145150	0.026149134	0.001225582	0.027375
7460041451	574600	4145150	0.028368925	0.001277919	0.029647
7460041451	574600	4145160	0.030988278	0.001327614	0.032316
7461041451	574610	4145160	0.124516938	0.00261456	0.127131
7461041451	574610	4145170	0.149578374	0.003321588	0.1529
7457041450	574570	4145030	0.182892992	0.004803918	0.187697
7463041450	574630	4145080	0.225623963	0.008886722	0.234511
7461041450	574610	4145090	0.274636941	0.03329746	0.307934
7462041450	574620	4145090	0.323916293	0.022024688	0.345941
7463041450	574630	4145090	0.375078029	0.00843621	0.383514
7464041450	574640	4145090	0.411731212	0.004656366	0.416388
7460041451	574600	4145100	0.412721239	0.002902144	0.415623
7461041451	574610	4145100	0.404774388	0.002102442	0.406877
7462041451	574620	4145100	0.025381086	0.001425277	0.026806
7463041451	574630	4145100	0.027481008	0.001502976	0.028984
7464041451	574640	4145100	0.029896141	0.001553074	0.031449
7465041451	574650	4145100	0.032391185	0.001494669	0.033886
7459041451	574590	4145110	0.094194597	0.00247321	0.096668
7460041451	574600	4145110	0.110372431	0.00289395	0.113266
7461041451	574610	4145110	0.13021736	0.003636245	0.133854
7462041451	574620	4145110	0.155607326	0.005191894	0.160799
7463041451	574630	4145110	0.185911908	0.009105967	0.195018
7464041451	574640	4145110	0.221810362	0.030330756	0.252141
7465041451	574650	4145110	0.256434657	0.021240256	0.277675
7466041451	574660	4145110	0.290996798	0.008496979	0.299494
7460041451	574600	4145120	0.309057015	0.004550855	0.313608
7461041451	574610	4145120	0.317731957	0.002935564	0.320668
7462041451	574620	4145120	0.313336771	0.002090431	0.315427
7463041451	574630	4145120	0.024413258	0.001663302	0.026077
7464041451	574640	4145120	0.026548696	0.001804917	0.028354
7465041451	574650	4145120	0.028693014	0.001798469	0.030491
7466041451	574660	4145120	0.030899486	0.001735165	0.032635
7460041451	574600	4145130	0.032582087	0.001715386	0.034297
7462041451	574620	4145130	0.051552418	0.002113472	0.053666
7463041451	574630	4145130	0.057954295	0.002240246	0.060195
7464041451	574640	4145130	0.065261846	0.002433325	0.067695
7465041451	574650	4145130	0.074607164	0.00261212	0.077219
7463041451	574630	4145140	0.085630645	0.002873552	0.088504
7464041451	574640	4145140	0.098354485	0.003264295	0.101619
7459041451	574590	4145150	0.114758738	0.00410067	0.118859
7460041451	574600	4145150	0.133986565	0.00581252	0.139799
7460041451	574600	4145160	0.155966932	0.010166035	0.166133
7461041451	574610	4145160	0.180864104	0.032396887	0.213261
7461041451	574610	4145170	0.208140891	0.021093949	0.229235
7457041450	574570	4145030	0.232136829	0.008495022	0.240632
7463041450	574630	4145080	0.242734109	0.004417956	0.247152
7461041450	574610	4145090	0.250183727	0.00291437	0.253098
7462041450	574620	4145090	0.250197045	0.002108023	0.252305
7463041450	574630	4145090	0.022561952	0.002004847	0.024567
7464041450	574640	4145090	0.025589747	0.002270204	0.02786
7460041451	574600	4145100	0.026522059	0.002133336	0.028655
7461041451	574610	4145100	0.029603128	0.002146248	0.031749
7462041451	574620	4145100	0.032373427	0.002184562	0.034558
7463041451	574630	4145100	0.035649838	0.00223015	0.03788
7464041451	574640	4145100	0.039285855	0.002298971	0.041585
7465041451	574650	4145100	0.043379149	0.00242367	0.045803
7459041451	574590	4145110	0.048169457	0.002543423	0.050713
7460041451	574600	4145110	0.053714495	0.002727207	0.056442
7461041451	574610	4145110	0.060191844	0.002934086	0.063126
7462041451	574620	4145110	0.06807654	0.003116438	0.071193

Max GLC for Chronic Calcs

Max GLC: 0.567482

XY	X	Y	2025	2026	2027	2034	2035
57463041451	574630	4145140	0.0113939	0.0103444	0		
57464041451	574640	4145140	0.0107174	0.0097126	0		
57459041451	574590	4145150	0.0005269	0.0005022	0		
57460041451	574600	4145150	0.0005716	0.0005437	0		
57460041451	574600	4145160	0.0006244	0.0005924	0		
57461041451	574610	4145160	0.002509	0.0023198	0		
57461041451	574610	4145170	0.003014	0.0027907	0		
57457041450	574570	4145030	0.0036853	0.0034288	0		
57463041450	574630	4145080	0.0045463	0.0042957	0		
57461041450	574610	4145090	0.005534	0.0057288	0		
57462041450	574620	4145090	0.0065269	0.0063732	0		
57463041450	574630	4145090	0.0075579	0.0070003	0		
57464041450	574640	4145090	0.0082964	0.007582	0		
57460041451	574600	4145100	0.0083164	0.007561	0		
57461041451	574610	4145100	0.0081562	0.0073989	0		
57462041451	574620	4145100	0.0005114	0.0004927	0		
57463041451	574630	4145100	0.0005537	0.0005326	0		
57464041451	574640	4145100	0.0006024	0.0005776	0		
57465041451	574650	4145100	0.0006527	0.0006216	0		
57459041451	574590	4145110	0.001898	0.0017659	0		
57460041451	574600	4145110	0.002224	0.0020691	0		
57461041451	574610	4145110	0.0026239	0.0024461	0		
57462041451	574620	4145110	0.0031355	0.0029418	0		
57463041451	574630	4145110	0.0037461	0.0035793	0		
57464041451	574640	4145110	0.0044695	0.0047033	0		
57465041451	574650	4145110	0.0051672	0.0051301	0		
57466041451	574660	4145110	0.0058636	0.0054745	0		
57460041451	574600	4145120	0.0062275	0.0057147	0		
57461041451	574610	4145120	0.0064023	0.0058364	0		
57462041451	574620	4145120	0.0063138	0.0057378	0		
57463041451	574630	4145120	0.0004919	0.0004804	0		
57464041451	574640	4145120	0.000535	0.0005224	0		
57465041451	574650	4145120	0.0005782	0.0005612	0		
57466041451	574660	4145120	0.0006226	0.0005998	0		
57460041451	574600	4145130	0.0006565	0.0006299	0		
57462041451	574620	4145130	0.0010388	0.0009834	0		
57463041451	574630	4145130	0.0011678	0.0011025	0		
57464041451	574640	4145130	0.001315	0.0012395	0		
57465041451	574650	4145130	0.0015033	0.0014132	0		
57463041451	574630	4145140	0.0017255	0.0016192	0		
57464041451	574640	4145140	0.0019819	0.001859	0		
57459041451	574590	4145150	0.0023124	0.0021756	0		
57460041451	574600	4145150	0.0026998	0.0025629	0		
57460041451	574600	4145160	0.0031427	0.003059	0		
57461041451	574610	4145160	0.0036444	0.0040055	0		
57461041451	574610	4145170	0.0041941	0.0042496	0		
57457041450	574570	4145030	0.0046776	0.0044053	0		
57463041450	574630	4145080	0.0048911	0.0045071	0		
57461041450	574610	4145090	0.0050412	0.004609	0		
57462041450	574620	4145090	0.0050415	0.0045913	0		
57463041450	574630	4145090	0.0004546	0.0004544	0		
57464041450	574640	4145090	0.0005156	0.0005153	0		
57460041451	574600	4145100	0.0005344	0.0005292	0		
57461041451	574610	4145100	0.0005965	0.0005854	0		
57462041451	574620	4145100	0.0006523	0.0006366	0		
57463041451	574630	4145100	0.0007183	0.0006971	0		
57464041451	574640	4145100	0.0007916	0.0007647	0		
57465041451	574650	4145100	0.0008741	0.0008418	0		
57459041451	574590	4145110	0.0009706	0.0009315	0		
57460041451	574600	4145110	0.0010824	0.0010363	0		
57461041451	574610	4145110	0.0012129	0.0011585	0		
57462041451	574620	4145110	0.0013717	0.0013058	0		

Garvey Reservoir Rehab - Unmitigated Junction Structure

Cancer Risk Summary & Maximum Annual GLC for Chronic Calculations

Cancer Risk Summary

Max Risk: 28.16465

XY	X	Y	Offroad Risk	Haul Risk	Total Risk
7463041451	574630	4145110	0.077244276	0.003362334	0.080607
7464041451	574640	4145110	0.08758406	0.003731417	0.091315
7465041451	574650	4145110	0.098958268	0.004486774	0.103445
7466041451	574660	4145110	0.115304806	0.006564003	0.121869
7460041451	574600	4145120	0.13244603	0.012936197	0.145382
7461041451	574610	4145120	0.151598384	0.045061666	0.19666
7462041451	574620	4145120	0.171518785	0.01900102	0.19052
7463041451	574630	4145120	0.189246033	0.0083716	0.197618
7464041451	574640	4145120	0.203394979	0.004879807	0.208275
7465041451	574650	4145120	0.202364996	0.002896732	0.205262
7466041451	574660	4145120	0.204522633	0.002128574	0.206651
7460041451	574600	4145130	0.021354386	0.002584194	0.023939
7462041451	574620	4145130	0.024630797	0.003065465	0.027696
7463041451	574630	4145130	0.026526498	0.003181715	0.029708
7464041451	574640	4145130	0.028693014	0.003127143	0.03182
7465041451	574650	4145130	0.031108146	0.003163906	0.034272
7463041451	574630	4145140	0.033882885	0.003142778	0.037026
7464041451	574640	4145140	0.03700391	0.003195161	0.040199
7459041451	574590	4145150	0.04060885	0.00324106	0.04385
7460041451	574600	4145150	0.044777617	0.003416486	0.048194
7460041451	574600	4145160	0.049687794	0.003598488	0.053286
7461041451	574610	4145160	0.055312744	0.003753873	0.059067
7461041451	574610	4145170	0.061887764	0.003914099	0.065802
7457041450	574570	4145030	0.069603756	0.004137611	0.073741
7463041450	574630	4145080	0.078660502	0.004538598	0.083199
7461041450	574610	4145090	0.087535225	0.005300093	0.092835
7462041450	574620	4145090	0.100219109	0.007390795	0.10761
7463041450	574630	4145090	0.114066163	0.0167605	0.130827
7464041450	574640	4145090	0.128468165	0.046036635	0.174505
7460041451	574600	4145100	0.143380719	0.015407833	0.158789
7461041451	574610	4145100	0.157121223	0.007800234	0.164921
7462041451	574620	4145100	0.168144703	0.004872458	0.173017
7463041451	574630	4145100	0.175234715	0.003325186	0.17856
7464041451	574640	4145100	0.177516659	0.002413369	0.17993
7465041451	574650	4145100	0	0	0
7459041451	574590	4145110	0	0	0
7460041451	574600	4145110	0	0	0
7461041451	574610	4145110	0	0	0
7462041451	574620	4145110	0	0	0
7463041451	574630	4145110	0	0	0
7464041451	574640	4145110	0	0	0
7465041451	574650	4145110	0	0	0
7466041451	574660	4145110	0	0	0
7460041451	574600	4145120	0	0	0
7461041451	574610	4145120	0	0	0
7462041451	574620	4145120	0	0	0
7463041451	574630	4145120	0	0	0
7464041451	574640	4145120	0	0	0
7465041451	574650	4145120	0	0	0
7466041451	574660	4145120	0	0	0
7460041451	574600	4145130	0	0	0
7462041451	574620	4145130	0	0	0
7463041451	574630	4145130	0	0	0
7464041451	574640	4145130	0	0	0
7465041451	574650	4145130	0	0	0
7463041451	574630	4145140	0	0	0
7464041451	574640	4145140	0	0	0
7459041451	574590	4145150	0	0	0
7460041451	574600	4145150	0	0	0
7460041451	574600	4145160	0	0	0
7461041451	574610	4145160	0	0	0
7461041451	574610	4145170	0	0	0

Max GLC for Chronic Calcs

Max GLC: 0.567482

XY	X	Y	2025	2026	2027	2034	2035
57463041451	574630	4145110	0.0015565	0.0014778	0		
57464041451	574640	4145110	0.0017648	0.0016738	0		
57465041451	574650	4145110	0.001994	0.0018972	0		
57466041451	574660	4145110	0.0023234	0.0022403	0		
57460041451	574600	4145120	0.0026688	0.0026933	0		
57461041451	574610	4145120	0.0030547	0.0037556	0		
57462041451	574620	4145120	0.0034561	0.0035379	0		
57463041451	574630	4145120	0.0038133	0.0036235	0		
57464041451	574640	4145120	0.0040984	0.0038029	0		
57465041451	574650	4145120	0.0040777	0.0037401	0		
57466041451	574660	4145120	0.0041212	0.0037622	0		
57460041451	574600	4145130	0.0004303	0.0004453	0		
57462041451	574620	4145130	0.0004963	0.0005155	0		
57463041451	574630	4145130	0.0005345	0.0005526	0		
57464041451	574640	4145130	0.0005782	0.0005907	0		
57465041451	574650	4145130	0.0006268	0.0006354	0		
57463041451	574630	4145140	0.0006827	0.0006853	0		
57464041451	574640	4145140	0.0007456	0.0007432	0		
57459041451	574590	4145150	0.0008183	0.0008097	0		
57460041451	574600	4145150	0.0009023	0.0008893	0		
57460041451	574600	4145160	0.0010012	0.0009825	0		
57461041451	574610	4145160	0.0011146	0.0010881	0		
57461041451	574610	4145170	0.001247	0.0012111	0		
57457041450	574570	4145030	0.0014025	0.0013563	0		
57463041450	574630	4145080	0.001585	0.0015297	0		
57461041450	574610	4145090	0.0017638	0.0017078	0		
57462041450	574620	4145090	0.0020194	0.0019847	0		
57463041450	574630	4145090	0.0022984	0.0024445	0		
57464041450	574640	4145090	0.0025886	0.0033571	0		
57460041451	574600	4145100	0.0028891	0.0029469	0		
57461041451	574610	4145100	0.003166	0.0030273	0		
57462041451	574620	4145100	0.0033881	0.0031624	0		
57463041451	574630	4145100	0.003531	0.0032568	0		
57464041451	574640	4145100	0.003577	0.003278	0		
57465041451	574650	4145100	0	0	0		
57459041451	574590	4145110	0	0	0		
57460041451	574600	4145110	0	0	0		
57461041451	574610	4145110	0	0	0		
57462041451	574620	4145110	0	0	0		
57463041451	574630	4145110	0	0	0		
57464041451	574640	4145110	0	0	0		
57465041451	574650	4145110	0	0	0		
57466041451	574660	4145110	0	0	0		
57460041451	574600	4145120	0	0	0		
57461041451	574610	4145120	0	0	0		
57462041451	574620	4145120	0	0	0		
57463041451	574630	4145120	0	0	0		
57464041451	574640	4145120	0	0	0		
57465041451	574650	4145120	0	0	0		
57466041451	574660	4145120	0	0	0		
57460041451	574600	4145130	0	0	0		
57462041451	574620	4145130	0	0	0		
57463041451	574630	4145130	0	0	0		
57464041451	574640	4145130	0	0	0		
57465041451	574650	4145130	0	0	0		
57463041451	574630	4145140	0	0	0		
57464041451	574640	4145140	0	0	0		
57459041451	574590	4145150	0	0	0		
57460041451	574600	4145150	0	0	0		
57460041451	574600	4145160	0	0	0		
57461041451	574610	4145160	0	0	0		
57461041451	574610	4145170	0	0	0		

Garvey Reservoir Rehab - Unmitigated Junction Structure

Construction Modeling Assumptions

AERMOD Sources

Volume Sources		
Offroad Construction Exhaust		
Release Height	3.66	m
Emissions rate	1	g/s
Init Vert Dimension	3.4	m
Line Volume		
Onroad Hauling Exhaust		
Plume Height	7.315	m
Plume Width	20	m
Release Height	3.66	m
Emissions rate	1	g/s

Meteorology:

SCAQMD	Pico	Rivera	2010 - 2012, 2015 - 2016

SCAQMD Met Data

https://www.aqmd.gov/home/air-quality/meteorological-data/data-for-aermod

AERMOD Sources

Garvey Reservoir Rehab - Unmitigated Junction Structure

Health Risk Assessment Risk Factors

Residential Risk	Abbreviation	UOM	3rd Trimester	0<2	2<16	16<30
Daily Breathing Rate (95th %'ile)	DBR	L/kg-day	361	1090	572	261
Fraction Of Time At Home [a]	FAH	unitless	1	1	1	0.73
Exposure Frequency	EF	days/year	0.96	0.96	0.96	0.96
Age Sensitivity Factor	ASF	unitless	10	10	3	1
Inhalation Absorption Factor	A	unitless	1	1	1	1
Conversion Factor	CF_1	m^3/L	0.001	0.001	0.001	0.001
Conversion Factor	CF_2	$\mu g/m^3$	0.001	0.001	0.001	0.001
Cancer Potency Factor (diesel exhaust)	CPF	$mg/kg\text{-}day^{-1}$	1.1	1.1	1.1	1.1
Averaging Time (for residential exposure)	AT	years	70.00	70.00	70.00	70.00

[a] assume school or daycare will have cancer risk of >1 per million

Garvey Reservoir Rehab - Unmitigated Junction Structure

Health Risk Assessment Exposure Duration Assumptions for Offroad Equipment

Residential Receptors

			Start Date	*11/1/2025*	*1/31/2026*
			End Date	*1/30/2026*	*1/31/2028*
	11/1/2025	*4/30/2026*	*Days*	*90*	*730*
Phase	Start Date	End Date	Duration (days)	3rd Tri	0<2
Demolition - 2025			1	0	0
Demolition - 2026			1	0	0
Site Preparation - 2025			1	0	0
Site Preparation - 2026			1	0	0
Grading - 2025			1	0	0
Grading - 2026			1	0	0
Infrastructure - 2025	11/1/2025	12/31/2025	61	61	0
Infrastructure - 2026	1/1/2026	4/30/2026	120	30	90
Paving - 2025			1	0	0
Architectural Coating - 2026			1	0	0

			Intake Factor for Inhalation, IF (m^3/kg-day)			Risk Calculation Part 1, R1		
Phase	Year	Year	Equation	3rd Trimester	0<2	Equation	3rd Trimester	0<2
Demolition - 2025		1900		0	0		0	0
Demolition - 2026		1900	$\frac{DBR \cdot FAH \cdot EF \cdot ED \cdot ASF \cdot A \cdot CF_1}{AT}$	0	0		0	0
Site Preparation - 2025		1900		0	0		0	0
Site Preparation - 2026		1900		0	0	$IF \cdot CPF \cdot CF_2$	0	0
Grading - 2025		1900		0	0		0	0
Grading - 2026		1900		0	0		0	0
Infrastructure - 2025		2025		0.00826459	0		9.09105E-06	0
Infrastructure - 2026		2026		0.004064552	0.036817414		4.47101E-06	4.04992E-05
Paving - 2025		1900		0	0		0	0
Architectural Coating - 2026		1900		0	0		0	0

Exposure Durations

Garvey Reservoir Rehab - Unmitigated Junction Structure

Offroad DPM Emissions, Ground Level Concentrations and Health Risk Calculations

Residential Receptors

Phase	Year	Emissions (lbs/day)	Work Hours Per Day	Emissions (g/s)
Demolition - 2025	1900		10	0
Demolition - 2026	1900		10	0
Site Preparation - 2025	1900		10	0
Site Preparation - 2026	1900		10	0
Grading - 2025	1900		10	0
Grading - 2026	1900		10	0
Infrastructure - 2025	2025	0.710	10	0.008945803
Infrastructure - 2026	2026	0.640	10	0.008063822
Paving - 2025	1900		10	0
Architectural Coating - 2026	1900		10	0

		AERMOD Column Identifier:	*4*	*4*	*4*	*4*	*4*	*4*	*4*	*4*	*4*	*4*				
Garvey Reservoir Rehab - Unmitigated Junction Structure			Demolition - 2025	Demolition - 2026	ite Preparation - 202	ite Preparation - 202	Grading - 2025	Grading - 2026	nfrastructure - 202	nfrastructure - 202	Paving - 2025	itectural Coating -	Child Risk			
Unique Identifier	X (UTM)	Y (UTM)	1900	1900	1900	1900	1900	1900	2025	2026	1900	1900	3rd Trimester	0<2	Total	per million
396166.283767377.2	396166.28	3767377	0	0	0	0	0	0	0.000337883	0.000304571	0	0	4.43345E-09	1.23349E-08	1.67683E-08	0.0167683
396266.283767377.2	396266.28	3767377	0	0	0	0	0	0	0.000373219	0.000336423	0	0	4.8971E-09	1.36248E-08	1.85219E-08	0.0185219
396366.283767377.2	396366.28	3767377	0	0	0	0	0	0	0.000426089	0.00038408	0	0	5.59082E-09	1.55549E-08	2.11457E-08	0.0211457
396466.283767377.2	396466.28	3767377	0	0	0	0	0	0	0.000481642	0.000434156	0	0	6.31975E-09	1.7583E-08	2.39027E-08	0.0239027
396566.283767377.2	396566.28	3767377	0	0	0	0	0	0	0.000550704	0.000496409	0	0	7.22592E-09	2.01041E-08	2.73301E-08	0.0273301
396666.283767377.2	396666.28	3767377	0	0	0	0	0	0	0.000613324	0.000552856	0	0	8.04758E-09	2.23902E-08	3.04378E-08	0.0304378
396766.283767377.2	396766.28	3767377	0	0	0	0	0	0	0.000670398	0.000604303	0	0	8.79647E-09	2.44738E-08	3.32702E-08	0.0332702
396866.283767377.2	396866.28	3767377	0	0	0	0	0	0	0.000733377	0.000661072	0	0	9.62282E-09	2.67729E-08	3.63957E-08	0.0363957
396966.283767377.2	396966.28	3767377	0	0	0	0	0	0	0.000810758	0.000730824	0	0	1.06382E-08	2.95978E-08	4.02359E-08	0.0402359
397066.283767377.2	397066.28	3767377	0	0	0	0	0	0	0.000864165	0.000778965	0	0	1.13389E-08	3.15474E-08	4.28864E-08	0.0428864
397166.283767377.2	397166.28	3767377	0	0	0	0	0	0	0.000883756	0.000796625	0	0	1.1596E-08	3.22626E-08	4.38586E-08	0.0438586
397266.283767377.2	397266.28	3767377	0	0	0	0	0	0	0.000875257	0.000788964	0	0	1.14845E-08	3.19524E-08	4.34369E-08	0.0434369
397366.283767377.2	397366.28	3767377	0	0	0	0	0	0	0.000879462	0.000792754	0	0	1.15396E-08	3.21059E-08	4.36455E-08	0.0436455
397466.283767377.2	397466.28	3767377	0	0	0	0	0	0	0.00086649	0.000781062	0	0	1.13694E-08	3.16323E-08	4.30018E-08	0.0430018
397566.283767377.2	397566.28	3767377	0	0	0	0	0	0	0.000826771	0.000745258	0	0	1.08483E-08	3.01823E-08	4.10306E-08	0.0410306
397666.283767377.2	397666.28	3767377	0	0	0	0	0	0	0.000773365	0.000697117	0	0	1.01475E-08	2.82327E-08	3.83802E-08	0.0383802
397766.283767377.2	397766.28	3767377	0	0	0	0	0	0	0.000695805	0.000627204	0	0	9.12983E-09	2.54012E-08	3.45311E-08	0.0345311
397866.283767377.2	397866.28	3767377	0	0	0	0	0	0	0.000627548	0.000565677	0	0	8.23422E-09	2.29094E-08	3.11437E-08	0.0311437
396166.283767477.2	396166.28	3767477	0	0	0	0	0	0	0.000355775	0.000320698	0	0	4.66821E-09	1.2988E-08	1.76562E-08	0.0176562
396266.283767477.2	396266.28	3767477	0	0	0	0	0	0	0.000391468	0.000352873	0	0	5.13656E-09	1.42911E-08	1.94276E-08	0.0194276
396366.283767477.2	396366.28	3767477	0	0	0	0	0	0	0.000453821	0.000409078	0	0	5.95469E-09	1.65673E-08	2.2522E-08	0.022522
396466.283767477.2	396466.28	3767477	0	0	0	0	0	0	0.000522882	0.00047133	0	0	6.86087E-09	1.90885E-08	2.59494E-08	0.0259494
396566.283767477.2	396566.28	3767477	0	0	0	0	0	0	0.000602231	0.000542857	0	0	7.90203E-09	2.19852E-08	2.98873E-08	0.0298873
396666.283767477.2	396666.28	3767477	0	0	0	0	0	0	0.000687485	0.000619705	0	0	9.02066E-09	2.50975E-08	3.41182E-08	0.0341182
396766.283767477.2	396766.28	3767477	0	0	0	0	0	0	0.000780342	0.000703407	0	0	1.02391E-08	2.84874E-08	3.87265E-08	0.0387265
396866.283767477.2	396866.28	3767477	0	0	0	0	0	0	0.000882861	0.000795819	0	0	1.15842E-08	3.223E-08	4.38142E-08	0.0438142
396966.283767477.2	396966.28	3767477	0	0	0	0	0	0	0.001007297	0.000907986	0	0	1.3217E-08	3.67727E-08	4.99897E-08	0.0499897
397066.283767477.2	397066.28	3767477	0	0	0	0	0	0	0.001108832	0.000999511	0	0	1.45493E-08	4.04793E-08	5.50286E-08	0.0550286
397166.283767477.2	397166.28	3767477	0	0	0	0	0	0	0.001162686	0.001048055	0	0	1.52559E-08	4.24453E-08	5.77012E-08	0.0577012
397266.283767477.2	397266.28	3767477	0	0	0	0	0	0	0.001168232	0.001053055	0	0	1.53287E-08	4.26478E-08	5.79765E-08	0.0579765
397366.283767477.2	397366.28	3767477	0	0	0	0	0	0	0.001159823	0.001045475	0	0	1.52183E-08	4.23408E-08	5.75592E-08	0.0575592
397466.283767477.2	397466.28	3767477	0	0	0	0	0	0	0.001140053	0.001027654	0	0	1.49589E-08	4.16191E-08	5.6578E-08	0.056578
397566.283767477.2	397566.28	3767477	0	0	0	0	0	0	0.001075196	0.000969191	0	0	1.41079E-08	3.92514E-08	5.33593E-08	0.0533593
397666.283767477.2	397666.28	3767477	0	0	0	0	0	0	0.000982875	0.000885972	0	0	1.28966E-08	3.58811E-08	4.87777E-08	0.0487777
397766.283767477.2	397766.28	3767477	0	0	0	0	0	0	0.000877404	0.0007909	0	0	1.15126E-08	3.20308E-08	4.35434E-08	0.0435434
397866.283767477.2	397866.28	3767477	0	0	0	0	0	0	0.000771575	0.000695505	0	0	1.0124E-08	2.81674E-08	3.82914E-08	0.0382914
396166.283767577.2	396166.28	3767577	0	0	0	0	0	0	0.000366688	0.000330536	0	0	4.81141E-09	1.33864E-08	1.81978E-08	0.0181978
396266.283767577.2	396266.28	3767577	0	0	0	0	0	0	0.000410881	0.000370371	0	0	5.39127E-09	1.49997E-08	2.0391E-08	0.020391
396366.283767577.2	396366.28	3767577	0	0	0	0	0	0	0.000474038	0.000427302	0	0	6.21997E-09	1.73054E-08	2.35253E-08	0.0235253
396466.283767577.2	396466.28	3767577	0	0	0	0	0	0	0.000555445	0.000500683	0	0	7.28813E-09	2.02772E-08	2.75654E-08	0.0275654
396566.283767577.2	396566.28	3767577	0	0	0	0	0	0	0.000656622	0.000591885	0	0	8.6157E-09	2.39708E-08	3.25865E-08	0.0325865

Garvey Reservoir Rehab - Unmitigated Junction Structure			Demolition - 2025	Demolition - 2026	ite Preparation - 202	te Preparation - 202	Grading - 2025	Grading - 2026	nfrastructure - 202	nfrastructure - 202	Paving - 2025	itectural Coating -	Child Risk			
Unique Identifier	X (UTM)	Y (UTM)	1900	1900	1900	1900	1900	1900	2025	2026	1900	1900	3rd Trimester	0<2	Total	per million
396666.283767577.2	396666.28	3767577	0	0	0	0	0	0	0.000778643	0.000701875	0	0	1.02168E-08	2.84253E-08	3.86421E-08	0.0386421
396766.283767577.2	396766.28	3767577	0	0	0	0	0	0	0.000892523	0.000804528	0	0	1.1711E-08	3.25827E-08	4.42937E-08	0.0442937
396866.283767577.2	396866.28	3767577	0	0	0	0	0	0	0.001070455	0.000964917	0	0	1.40457E-08	3.90783E-08	5.3124E-08	0.053124
396966.283767577.2	396966.28	3767577	0	0	0	0	0	0	0.001261448	0.00113708	0	0	1.65518E-08	4.60508E-08	6.26025E-08	0.0626025
397066.283767577.2	397066.28	3767577	0	0	0	0	0	0	0.001447968	0.00130521	0	0	1.89991E-08	5.28599E-08	7.18591E-08	0.0718591
397166.283767577.2	397166.28	3767577	0	0	0	0	0	0	0.001590564	0.001433748	0	0	2.08702E-08	5.80656E-08	7.89358E-08	0.0789358
397266.283767577.2	397266.28	3767577	0	0	0	0	0	0	0.001640929	0.001479147	0	0	2.1531E-08	5.99042E-08	8.14352E-08	0.0814352
397366.283767577.2	397366.28	3767577	0	0	0	0	0	0	0.001625721	0.001465438	0	0	2.13315E-08	5.9349E-08	8.06805E-08	0.0806805
397466.283767577.2	397466.28	3767577	0	0	0	0	0	0	0.001587075	0.001430603	0	0	2.08244E-08	5.79382E-08	7.87626E-08	0.0787626
397566.283767577.2	397566.28	3767577	0	0	0	0	0	0	0.00146246	0.001318274	0	0	1.91893E-08	5.3389E-08	7.25783E-08	0.0725783
397666.283767577.2	397666.28	3767577	0	0	0	0	0	0	0.001297141	0.001169254	0	0	1.70201E-08	4.73538E-08	6.43739E-08	0.0643739
397766.283767577.2	397766.28	3767577	0	0	0	0	0	0	0.001117331	0.001007171	0	0	1.46608E-08	4.07896E-08	5.54504E-08	0.0554504
397866.283767577.2	397866.28	3767577	0	0	0	0	0	0	0.000948434	0.000854926	0	0	1.24446E-08	3.46238E-08	4.70684E-08	0.0470684
396166.283767677.2	396166.28	3767677	0	0	0	0	0	0	0.000379749	0.000342309	0	0	4.98279E-09	1.38632E-08	1.8846E-08	0.018846
396266.283767677.2	396266.28	3767677	0	0	0	0	0	0	0.000428951	0.00038666	0	0	5.62838E-09	1.56594E-08	2.12878E-08	0.0212878
396366.283767677.2	396366.28	3767677	0	0	0	0	0	0	0.000499623	0.000450364	0	0	6.55568E-09	1.82394E-08	2.47951E-08	0.0247951
396466.283767677.2	396466.28	3767677	0	0	0	0	0	0	0.00059257	0.000534148	0	0	7.77526E-09	2.16325E-08	2.94078E-08	0.0294078
396566.283767677.2	396566.28	3767677	0	0	0	0	0	0	0.000706271	0.000636639	0	0	9.26716E-09	2.57833E-08	3.50505E-08	0.0350505
396666.283767677.2	396666.28	3767677	0	0	0	0	0	0	0.000832944	0.000750822	0	0	1.09293E-08	3.04077E-08	4.13369E-08	0.0413369
396766.283767677.2	396766.28	3767677	0	0	0	0	0	0	0.001028857	0.00092742	0	0	1.34999E-08	3.75597E-08	5.10596E-08	0.0510596
396866.283767677.2	396866.28	3767677	0	0	0	0	0	0	0.001304298	0.001175705	0	0	1.7114E-08	4.76151E-08	6.47291E-08	0.0647291
396966.283767677.2	396966.28	3767677	0	0	0	0	0	0	0.001637976	0.001476486	0	0	2.14923E-08	5.97964E-08	8.12887E-08	0.0812887
397066.283767677.2	397066.28	3767677	0	0	0	0	0	0	0.001974339	0.001779686	0	0	2.59058E-08	7.20758E-08	9.79816E-08	0.0979816
397166.283767677.2	397166.28	3767677	0	0	0	0	0	0	0.002286637	0.002061194	0	0	3.00035E-08	8.34766E-08	1.1348E-07	0.1134801
397266.283767677.2	397266.28	3767677	0	0	0	0	0	0	0.00250402	0.002257144	0	0	3.28559E-08	9.14124E-08	1.24268E-07	0.1242683
397366.283767677.2	397366.28	3767677	0	0	0	0	0	0	0.002490064	0.002244565	0	0	3.26728E-08	9.0903E-08	1.23576E-07	0.1235757
397466.283767677.2	397466.28	3767677	0	0	0	0	0	0	0.002385667	0.00215046	0	0	3.13029E-08	8.70918E-08	1.18395E-07	0.1183948
397566.283767677.2	397566.28	3767677	0	0	0	0	0	0	0.002114072	0.001905642	0	0	2.77393E-08	7.71769E-08	1.04916E-07	0.1049162
397666.283767677.2	397666.28	3767677	0	0	0	0	0	0	0.001778157	0.001602846	0	0	2.33317E-08	6.49139E-08	8.82456E-08	0.0882456
397766.283767677.2	397766.28	3767677	0	0	0	0	0	0	0.001451814	0.001308678	0	0	1.90496E-08	5.30003E-08	7.205E-08	0.07205
397866.283767677.2	397866.28	3767677	0	0	0	0	0	0	0.001171363	0.001055877	0	0	1.53698E-08	4.27621E-08	5.81319E-08	0.0581319
396166.283767777.2	396166.28	3767777	0	0	0	0	0	0	0.000388516	0.000350212	0	0	5.09782E-09	1.41833E-08	1.92811E-08	0.0192811
396266.283767777.2	396266.28	3767777	0	0	0	0	0	0	0.000448095	0.000403917	0	0	5.87957E-09	1.63583E-08	2.22379E-08	0.0222379
396366.283767777.2	396366.28	3767777	0	0	0	0	0	0	0.000520825	0.000469476	0	0	6.83387E-09	1.90134E-08	2.58472E-08	0.0258472
396466.283767777.2	396466.28	3767777	0	0	0	0	0	0	0.000618244	0.000557291	0	0	8.11214E-09	2.25698E-08	3.06819E-08	0.0306819
396566.283767777.2	396566.28	3767777	0	0	0	0	0	0	0.000737313	0.00066462	0	0	9.67447E-09	2.69166E-08	3.6591E-08	0.036591
396666.283767777.2	396666.28	3767777	0	0	0	0	0	0	0.00090612	0.000816785	0	0	1.18894E-08	3.30791E-08	4.49685E-08	0.0449685
396766.283767777.2	396766.28	3767777	0	0	0	0	0	0	0.001170827	0.001055393	0	0	1.53627E-08	4.27425E-08	5.81052E-08	0.0581052
396866.283767777.2	396866.28	3767777	0	0	0	0	0	0	0.001547356	0.001394799	0	0	2.03032E-08	5.64882E-08	7.67914E-08	0.0767914
396966.283767777.2	396966.28	3767777	0	0	0	0	0	0	0.002066212	0.001862501	0	0	2.71113E-08	7.54297E-08	1.02541E-07	0.102541
397066.283767777.2	397066.28	3767777	0	0	0	0	0	0	0.002742962	0.002472529	0	0	3.59911E-08	1.00135E-07	1.36126E-07	0.1361264
397166.283767777.2	397166.28	3767777	0	0	0	0	0	0	0.003499509	0.003154487	0	0	4.59179E-08	1.27754E-07	1.73672E-07	0.173672
397266.283767777.2	397266.28	3767777	0	0	0	0	0	0	0.004165345	0.003754677	0	0	5.46545E-08	1.52061E-07	2.06716E-07	0.2067158
397366.283767777.2	397366.28	3767777	0	0	0	0	0	0	0.00432458	0.003898213	0	0	5.67439E-08	1.57874E-07	2.14618E-07	0.2146182
397466.283767777.2	397466.28	3767777	0	0	0	0	0	0	0.003924613	0.003537679	0	0	5.14958E-08	1.43273E-07	1.94769E-07	0.1947689
397566.283767777.2	397566.28	3767777	0	0	0	0	0	0	0.003241422	0.002921845	0	0	4.25315E-08	1.18332E-07	1.60864E-07	0.1608638
397666.283767777.2	397666.28	3767777	0	0	0	0	0	0	0.002542666	0.00229198	0	0	3.3363E-08	9.28233E-08	1.26186E-07	0.1261862
397766.283767777.2	397766.28	3767777	0	0	0	0	0	0	0.001917175	0.001728158	0	0	2.51557E-08	6.99889E-08	9.51447E-08	0.0951447
397866.283767777.2	397866.28	3767777	0	0	0	0	0	0	0.001457271	0.001313597	0	0	1.91212E-08	5.31996E-08	7.23208E-08	0.0723208
396166.283767877.2	396166.28	3767877	0	0	0	0	0	0	0.000393973	0.000355131	0	0	5.16942E-09	1.43825E-08	1.95519E-08	0.0195519
396266.283767877.2	396266.28	3767877	0	0	0	0	0	0	0.000456504	0.000411497	0	0	5.98991E-09	1.66653E-08	2.26552E-08	0.0226552
396366.283767877.2	396366.28	3767877	0	0	0	0	0	0	0.000535675	0.000482862	0	0	7.02872E-09	1.95555E-08	2.65842E-08	0.0265842
396466.283767877.2	396466.28	3767877	0	0	0	0	0	0	0.000635957	0.000573257	0	0	8.34455E-09	2.32164E-08	3.1561E-08	0.031561
396566.283767877.2	396566.28	3767877	0	0	0	0	0	0	0.000768623	0.000692844	0	0	1.00853E-08	2.80596E-08	3.81449E-08	0.0381449
397466.283767877.2	397466.28	3767877	0	0	0	0	0	0	0.007993075	0.007205025	0	0	1.04879E-07	2.91797E-07	3.96677E-07	0.3966766
397566.283767877.2	397566.28	3767877	0	0	0	0	0	0	0.005373654	0.004843857	0	0	7.05091E-08	1.96172E-07	2.66681E-07	0.2666812
397666.283767877.2	397666.28	3767877	0	0	0	0	0	0	0.003316299	0.00298934	0	0	4.3514E-08	1.21066E-07	1.6458E-07	0.1645797
397766.283767877.2	397766.28	3767877	0	0	0	0	0	0	0.002278854	0.002054178	0	0	2.99014E-08	8.31925E-08	1.13094E-07	0.1130939
397866.283767877.2	397866.28	3767877	0	0	0	0	0	0	0.001784509	0.001608571	0	0	2.3415E-08	6.51458E-08	8.85608E-08	0.0885608
396166.283767977.2	396166.28	3767977	0	0	0	0	0	0	0.000394152	0.000355292	0	0	5.17177E-09	1.4389E-08	1.95608E-08	0.0195608
396266.283767977.2	396266.28	3767977	0	0	0	0	0	0	0.000459099	0.000413835	0	0	6.02395E-09	1.676E-08	2.27839E-08	0.0227839
396366.283767977.2	396366.28	3767977	0	0	0	0	0	0	0.000540595	0.000487297	0	0	7.09328E-09	1.97351E-08	2.68284E-08	0.0268284
396466.283767977.2	396466.28	3767977	0	0	0	0	0	0	0.000642845	0.000579466	0	0	8.43494E-09	2.34679E-08	3.19028E-08	0.0319028
397466.283767977.2	397466.28	3767977	0	0	0	0	0	0	0.01749808	0.015772917	0	0	2.29597E-07	6.3879E-07	8.68387E-07	0.8683865
397566.283767977.2	397566.28	3767977	0	0	0	0	0	0	0.008523382	0.007683049	0	0	1.11837E-07	3.11157E-07	4.22994E-07	0.4229944
397666.283767977.2	397666.28	3767977	0	0	0	0	0	0	0.004530423	0.004083761	0	0	5.94448E-08	1.65389E-07	2.24834E-07	0.2248337
397766.283767977.2	397766.28	3767977	0	0	0	0	0	0	0.003252604	0.002931925	0	0	4.26782E-08	1.1874E-07	1.61419E-07	0.1614187
397866.283767977.2	397866.28	3767977	0	0	0	0	0	0	0.00209126	0.00188508	0	0	2.744E-08	7.63441E-08	1.03784E-07	0.1037841
396166.283768077.2	396166.28	3768077	0	0	0	0	0	0	0.000397551	0.000358356	0	0	5.21637E-09	1.45131E-08	1.97295E-08	0.0197295

Garvey Reservoir Rehab - Unmitigated Junction Structure			Demolition - 2025	Demolition - 2026	ite Preparation - 202	te Preparation - 202	Grading - 2025	Grading - 2026	nfrastructure - 202	nfrastructure - 202	Paving - 2025	itectural Coating -	Child Risk			
Unique Identifier	X (UTM)	Y (UTM)	1900	1900	1900	1900	1900	1900	2025	2026	1900	1900	3rd Trimester	0<2	Total	per million
396266.283768077.2	396266.28	3768077	0	0	0	0	0	0	0.000457488	0.000412384	0	0	6.00282E-09	1.67012E-08	2.2704E-08	0.022704
396366.283768077.2	396366.28	3768077	0	0	0	0	0	0	0.000538895	0.000485765	0	0	7.07098E-09	1.96731E-08	2.6744E-08	0.026744
396466.283768077.2	396466.28	3768077	0	0	0	0	0	0	0.000648302	0.000584385	0	0	8.50654E-09	2.36671E-08	3.21736E-08	0.0321736
397466.283768077.2	397466.28	3768077	0	0	0	0	0	0	0.076824497	0.069250251	0	0	1.00803E-06	2.80458E-06	3.81261E-06	3.8126103
397566.283768077.2	397566.28	3768077	0	0	0	0	0	0	0.018912143	0.017047565	0	0	2.48151E-07	6.90412E-07	9.38563E-07	0.938563
397666.283768077.2	397666.28	3768077	0	0	0	0	0	0	0.00759284	0.00684425	0	0	9.96276E-08	2.77186E-07	3.76814E-07	0.3768139
397766.283768077.2	397766.28	3768077	0	0	0	0	0	0	0.004025253	0.003628397	0	0	5.28164E-08	1.46947E-07	1.99763E-07	0.1997634
397866.283768077.2	397866.28	3768077	0	0	0	0	0	0	0.002457323	0.002215051	0	0	3.22432E-08	8.97077E-08	1.21951E-07	0.1219509
396166.283768177.2	396166.28	3768177	0	0	0	0	0	0	0.00039451	0.000355615	0	0	5.17646E-09	1.44021E-08	1.95786E-08	0.0195786
396266.283768177.2	396266.28	3768177	0	0	0	0	0	0	0.00045552	0.00041061	0	0	5.977E-09	1.66294E-08	2.26063E-08	0.0226063
396366.283768177.2	396366.28	3768177	0	0	0	0	0	0	0.000536033	0.000483184	0	0	7.03342E-09	1.95686E-08	2.6602E-08	0.026602
396466.283768177.2	396466.28	3768177	0	0	0	0	0	0	0.000640877	0.000577692	0	0	8.40911E-09	2.3396E-08	3.18052E-08	0.0318052
397466.283768177.2	397466.28	3768177	0	0	0	0	0	0	0.112896657	0.101766001	0	0	1.48135E-06	4.12144E-06	5.60278E-06	5.6027827
397566.283768177.2	397566.28	3768177	0	0	0	0	0	0	0.024837842	0.022389041	0	0	3.25904E-07	9.06737E-07	1.23264E-06	1.2326409
397666.283768177.2	397666.28	3768177	0	0	0	0	0	0	0.009354805	0.0084325	0	0	1.22747E-07	3.41509E-07	4.64256E-07	0.4642559
397766.283768177.2	397766.28	3768177	0	0	0	0	0	0	0.004834401	0.00435777	0	0	6.34334E-08	1.76486E-07	2.39919E-07	0.2399194
397866.283768177.2	397866.28	3768177	0	0	0	0	0	0	0.002788407	0.002513493	0	0	3.65874E-08	1.01794E-07	1.38382E-07	0.1383818
396166.283768277.2	396166.28	3768277	0	0	0	0	0	0	0.000383507	0.000345696	0	0	5.03209E-09	1.40004E-08	1.90325E-08	0.0190325
396266.283768277.2	396266.28	3768277	0	0	0	0	0	0	0.00044559	0.000401659	0	0	5.8467E-09	1.62668E-08	2.21136E-08	0.0221136
396366.283768277.2	396366.28	3768277	0	0	0	0	0	0	0.000522882	0.00047133	0	0	6.86087E-09	1.90885E-08	2.59494E-08	0.0259494
396466.283768277.2	396466.28	3768277	0	0	0	0	0	0	0.000623791	0.00056229	0	0	8.18492E-09	2.27723E-08	3.09572E-08	0.0309572
397366.283768277.2	397366.28	3768277	0	0	0	0	0	0	0.038257173	0.034485339	0	0	5.01982E-07	1.39663E-06	1.89861E-06	1.8986092
397466.283768277.2	397466.28	3768277	0	0	0	0	0	0	0.039297928	0.035423484	0	0	5.15638E-07	1.43462E-06	1.95026E-06	1.9502592
397566.283768277.2	397566.28	3768277	0	0	0	0	0	0	0.020596816	0.018566144	0	0	2.70256E-07	7.51913E-07	1.02217E-06	1.0221692
397666.283768277.2	397666.28	3768277	0	0	0	0	0	0	0.009559038	0.008616597	0	0	1.25427E-07	3.48965E-07	4.74391E-07	0.4743915
397766.283768277.2	397766.28	3768277	0	0	0	0	0	0	0.005131134	0.004625247	0	0	6.73269E-08	1.87319E-07	2.54646E-07	0.2546455
397866.283768277.2	397866.28	3768277	0	0	0	0	0	0	0.003179786	0.002866286	0	0	4.17228E-08	1.16082E-07	1.57805E-07	0.1578049
396166.283768377.2	396166.28	3768377	0	0	0	0	0	0	0.000348528	0.000314167	0	0	4.57313E-09	1.27235E-08	1.72966E-08	0.0172966
396266.283768377.2	396266.28	3768377	0	0	0	0	0	0	0.000433245	0.000390531	0	0	5.68472E-09	1.58162E-08	2.15009E-08	0.0215009
396366.283768377.2	396366.28	3768377	0	0	0	0	0	0	0.00050508	0.000455283	0	0	6.62728E-09	1.84386E-08	2.50659E-08	0.0250659
396466.283768377.2	396466.28	3768377	0	0	0	0	0	0	0.00059919	0.000540115	0	0	7.86212E-09	2.18742E-08	2.97363E-08	0.0297363
397266.283768377.2	397266.28	3768377	0	0	0	0	0	0	0.009252644	0.008340411	0	0	1.21406E-07	3.3778E-07	4.59186E-07	0.4591859
397366.283768377.2	397366.28	3768377	0	0	0	0	0	0	0.01507824	0.013591653	0	0	1.97845E-07	5.5045E-07	7.48296E-07	0.7482959
397466.283768377.2	397466.28	3768377	0	0	0	0	0	0	0.017270409	0.015567693	0	0	2.26609E-07	6.30478E-07	8.57088E-07	0.8570878
397566.283768377.2	397566.28	3768377	0	0	0	0	0	0	0.013276287	0.011967357	0	0	1.74202E-07	4.84668E-07	6.58869E-07	0.6588694
397666.283768377.2	397666.28	3768377	0	0	0	0	0	0	0.008398946	0.007570881	0	0	1.10205E-07	3.06614E-07	4.16819E-07	0.416819
397766.283768377.2	397766.28	3768377	0	0	0	0	0	0	0.005152693	0.004644681	0	0	6.76098E-08	1.88106E-07	2.55715E-07	0.2557154
397866.283768377.2	397866.28	3768377	0	0	0	0	0	0	0.003384197	0.003050544	0	0	4.44049E-08	1.23544E-07	1.67949E-07	0.1679494
396166.283768477.2	396166.28	3768477	0	0	0	0	0	0	0.000335647	0.000302555	0	0	4.4041E-09	1.22532E-08	1.66573E-08	0.0166573
396266.283768477.2	396266.28	3768477	0	0	0	0	0	0	0.000413922	0.000373113	0	0	5.43118E-09	1.51108E-08	2.05419E-08	0.0205419
396366.283768477.2	396366.28	3768477	0	0	0	0	0	0	0.000463661	0.000417948	0	0	6.08381E-09	1.69265E-08	2.30104E-08	0.0230104
396466.283768477.2	396466.28	3768477	0	0	0	0	0	0	0.000567432	0.000511488	0	0	7.44542E-09	2.07148E-08	2.81603E-08	0.0281603
397166.283768477.2	397166.28	3768477	0	0	0	0	0	0	0.003693543	0.003329391	0	0	4.84639E-08	1.34838E-07	1.83301E-07	0.1833014
397266.283768477.2	397266.28	3768477	0	0	0	0	0	0	0.005642118	0.005085853	0	0	7.40317E-08	2.05973E-07	2.80004E-07	0.2800044
397366.283768477.2	397366.28	3768477	0	0	0	0	0	0	0.007888767	0.007111001	0	0	1.03511E-07	2.8799E-07	3.915E-07	0.3915
397466.283768477.2	397466.28	3768477	0	0	0	0	0	0	0.008943656	0.008061887	0	0	1.17352E-07	3.265E-07	4.43852E-07	0.4438516
397566.283768477.2	397566.28	3768477	0	0	0	0	0	0	0.00816555	0.007360496	0	0	1.07142E-07	2.98094E-07	4.05236E-07	0.4052361
397666.283768477.2	397666.28	3768477	0	0	0	0	0	0	0.006153102	0.005546458	0	0	8.07364E-08	2.24627E-07	3.05363E-07	0.3053633
397766.283768477.2	397766.28	3768477	0	0	0	0	0	0	0.004454115	0.004014977	0	0	5.84436E-08	1.62603E-07	2.21047E-07	0.2210468
397866.283768477.2	397866.28	3768477	0	0	0	0	0	0	0.003134699	0.002825644	0	0	4.11312E-08	1.14436E-07	1.55567E-07	0.1555674
396166.283768577.2	396166.28	3768577	0	0	0	0	0	0	0.00034987	0.000315376	0	0	4.59074E-09	1.27725E-08	1.73632E-08	0.0173632
396266.283768577.2	396266.28	3768577	0	0	0	0	0	0	0.000361053	0.000325456	0	0	4.73746E-09	1.31807E-08	1.79182E-08	0.0179182
396366.283768577.2	396366.28	3768577	0	0	0	0	0	0	0.000414101	0.000373274	0	0	5.43353E-09	1.51173E-08	2.05508E-08	0.0205508
396466.283768577.2	396466.28	3768577	0	0	0	0	0	0	0.000532007	0.000479556	0	0	6.9806E-09	1.94216E-08	2.64022E-08	0.0264022
396566.283768577.2	396566.28	3768577	0	0	0	0	0	0	0.000620213	0.000559065	0	0	8.13797E-09	2.26417E-08	3.07796E-08	0.0307796
396866.283768577.2	396866.28	3768577	0	0	0	0	0	0	0.001163312	0.001048619	0	0	1.52641E-08	4.24682E-08	5.77323E-08	0.0577323
396966.283768577.2	396966.28	3768577	0	0	0	0	0	0	0.001499943	0.001352061	0	0	1.96811E-08	5.47573E-08	7.44385E-08	0.0744385
397066.283768577.2	397066.28	3768577	0	0	0	0	0	0	0.00198239	0.001786943	0	0	2.60114E-08	7.23697E-08	9.83811E-08	0.0983811
397166.283768577.2	397166.28	3768577	0	0	0	0	0	0	0.002719614	0.002451483	0	0	3.56847E-08	9.9283E-08	1.34968E-07	0.1349677
397266.283768577.2	397266.28	3768577	0	0	0	0	0	0	0.003716713	0.003350276	0	0	4.87679E-08	1.35683E-07	1.84451E-07	0.1844513
397366.283768577.2	397366.28	3768577	0	0	0	0	0	0	0.004836817	0.004359947	0	0	6.34651E-08	1.76574E-07	2.40039E-07	0.2400393
397466.283768577.2	397466.28	3768577	0	0	0	0	0	0	0.005299851	0.004777331	0	0	6.95407E-08	1.93478E-07	2.63019E-07	0.2630186
397566.283768577.2	397566.28	3768577	0	0	0	0	0	0	0.00533304	0.004807248	0	0	6.99762E-08	1.94689E-07	2.64666E-07	0.2646656
397666.283768577.2	397666.28	3768577	0	0	0	0	0	0	0.004528008	0.004081584	0	0	5.94131E-08	1.65301E-07	2.24714E-07	0.2247138
397766.283768577.2	397766.28	3768577	0	0	0	0	0	0	0.003518026	0.003171179	0	0	4.61609E-08	1.2843E-07	1.74591E-07	0.174591
397866.283768577.2	397866.28	3768577	0	0	0	0	0	0	0.002693134	0.002427614	0	0	3.53373E-08	9.83163E-08	1.33654E-07	0.1336536
396166.283768677.2	396166.28	3768677	0	0	0	0	0	0	0.000333678	0.000300781	0	0	4.37828E-09	1.21814E-08	1.65596E-08	0.0165596
396266.283768677.2	396266.28	3768677	0	0	0	0	0	0	0.000377423	0.000340213	0	0	4.95227E-09	1.37783E-08	1.87306E-08	0.0187306
396366.283768677.2	396366.28	3768677	0	0	0	0	0	0	0.000395941	0.000356905	0	0	5.19525E-09	1.44543E-08	1.96496E-08	0.0196496

Garvey Reservoir Rehab - Unmitigated Junction Structure			Demolition - 2025	Demolition - 2026	ite Preparation - 202	te Preparation - 202	Grading - 2025	Grading - 2026	nfrastructure - 202	nfrastructure - 202	Paving - 2025	itectural Coating -	Child Risk			
Unique Identifier	X (UTM)	Y (UTM)	1900	1900	1900	1900	1900	1900	2025	2026	1900	1900	3rd Trimester	0<2	Total	per million
396466.283768677.2	396466.28	3768677	0	0	0	0	0	0	0.000494524	0.000445768	0	0	6.48877E-09	1.80532E-08	2.4542E-08	0.024542
396566.283768677.2	396566.28	3768677	0	0	0	0	0	0	0.000576289	0.000519471	0	0	7.56163E-09	2.10382E-08	2.85998E-08	0.0285998
396666.283768677.2	396666.28	3768677	0	0	0	0	0	0	0.000680955	0.000613818	0	0	8.93498E-09	2.48591E-08	3.37941E-08	0.0337941
396766.283768677.2	396766.28	3768677	0	0	0	0	0	0	0.000816394	0.000735904	0	0	1.07121E-08	2.98035E-08	4.05156E-08	0.0405156
396866.283768677.2	396866.28	3768677	0	0	0	0	0	0	0.000999425	0.00090089	0	0	1.31137E-08	3.64853E-08	4.9599E-08	0.049599
396966.283768677.2	396966.28	3768677	0	0	0	0	0	0	0.00124785	0.001124823	0	0	1.63734E-08	4.55544E-08	6.19277E-08	0.0619277
397066.283768677.2	397066.28	3768677	0	0	0	0	0	0	0.001590385	0.001433586	0	0	2.08678E-08	5.8059E-08	7.89269E-08	0.0789269
397166.283768677.2	397166.28	3768677	0	0	0	0	0	0	0.002038122	0.001837181	0	0	2.67427E-08	7.44043E-08	1.01147E-07	0.101147
397366.283768677.2	397366.28	3768677	0	0	0	0	0	0	0.00325341	0.002932651	0	0	4.26888E-08	1.1877E-07	1.61459E-07	0.1614587
397466.283768677.2	397466.28	3768677	0	0	0	0	0	0	0.003667869	0.003306248	0	0	4.8127E-08	1.339E-07	1.82027E-07	0.1820273
397566.283768677.2	397566.28	3768677	0	0	0	0	0	0	0.003687549	0.003323988	0	0	4.83853E-08	1.34619E-07	1.83004E-07	0.183004
397666.283768677.2	397666.28	3768677	0	0	0	0	0	0	0.003343941	0.003014257	0	0	4.38767E-08	1.22075E-07	1.65952E-07	0.1659516
397766.283768677.2	397766.28	3768677	0	0	0	0	0	0	0.002794848	0.002519299	0	0	3.66719E-08	1.02029E-07	1.38701E-07	0.1387014
397866.283768677.2	397866.28	3768677	0	0	0	0	0	0	0.002267135	0.002043614	0	0	2.97476E-08	8.27647E-08	1.12512E-07	0.1125123
396166.283768777.2	396166.28	3768777	0	0	0	0	0	0	0.000318471	0.000287072	0	0	4.17873E-09	1.16262E-08	1.58049E-08	0.0158049
396266.283768777.2	396266.28	3768777	0	0	0	0	0	0	0.000356043	0.00032094	0	0	4.67173E-09	1.29978E-08	1.76695E-08	0.0176695
396366.283768777.2	396366.28	3768777	0	0	0	0	0	0	0.000381538	0.000343922	0	0	5.00626E-09	1.39286E-08	1.89348E-08	0.0189348
396466.283768777.2	396466.28	3768777	0	0	0	0	0	0	0.000458472	0.000413271	0	0	6.01573E-09	1.67371E-08	2.27529E-08	0.0227529
396566.283768777.2	396566.28	3768777	0	0	0	0	0	0	0.000525566	0.00047375	0	0	6.89608E-09	1.91865E-08	2.60825E-08	0.0260825
396666.283768777.2	396666.28	3768777	0	0	0	0	0	0	0.000611267	0.000551001	0	0	8.02059E-09	2.23151E-08	3.03357E-08	0.0303357
396766.283768777.2	396766.28	3768777	0	0	0	0	0	0	0.000722016	0.000650831	0	0	9.47375E-09	2.63581E-08	3.58319E-08	0.0358319
396866.283768777.2	396866.28	3768777	0	0	0	0	0	0	0.000865685	0.000780336	0	0	1.13589E-08	3.1603E-08	4.29618E-08	0.0429618
396966.283768777.2	396966.28	3768777	0	0	0	0	0	0	0.001050774	0.000947177	0	0	1.37875E-08	3.83599E-08	5.21473E-08	0.0521473
397066.283768777.2	397066.28	3768777	0	0	0	0	0	0	0.001289359	0.001162239	0	0	1.6918E-08	4.70697E-08	6.39877E-08	0.0639877
397166.283768777.2	397166.28	3768777	0	0	0	0	0	0	0.00157956	0.001423829	0	0	2.07258E-08	5.76639E-08	7.83897E-08	0.0783897
397266.283768777.2	397266.28	3768777	0	0	0	0	0	0	0.001949917	0.001757671	0	0	2.55853E-08	7.11842E-08	9.67696E-08	0.0967696
397366.283768777.2	397366.28	3768777	0	0	0	0	0	0	0.002314816	0.002086595	0	0	3.03733E-08	8.45053E-08	1.14879E-07	0.1148786
397466.283768777.2	397466.28	3768777	0	0	0	0	0	0	0.00257326	0.002319558	0	0	3.37644E-08	9.39402E-08	1.27705E-07	0.1277046
397566.283768777.2	397566.28	3768777	0	0	0	0	0	0	0.002638743	0.002378586	0	0	3.46236E-08	9.63307E-08	1.30954E-07	0.1309543
397666.283768777.2	397666.28	3768777	0	0	0	0	0	0	0.002493821	0.002247952	0	0	3.27221E-08	9.10401E-08	1.23762E-07	0.1237622
397766.283768777.2	397766.28	3768777	0	0	0	0	0	0	0.002202904	0.001985716	0	0	2.89049E-08	8.04198E-08	1.09325E-07	0.1093247
397866.283768777.2	397866.28	3768777	0	0	0	0	0	0	0.001877903	0.001692758	0	0	2.46404E-08	6.85553E-08	9.31957E-08	0.0931957
396166.283768877.2	396166.28	3768877	0	0	0	0	0	0	0.000300668	0.000271025	0	0	3.94515E-09	1.09763E-08	1.49214E-08	0.0149214
396266.283768877.2	396266.28	3768877	0	0	0	0	0	0	0.000335647	0.000302555	0	0	4.4041E-09	1.22532E-08	1.66573E-08	0.0166573
396366.283768877.2	396366.28	3768877	0	0	0	0	0	0	0.000374382	0.000337471	0	0	4.91236E-09	1.36673E-08	1.85796E-08	0.0185796
396466.283768877.2	396466.28	3768877	0	0	0	0	0	0	0.000424657	0.00038279	0	0	5.57204E-09	1.55027E-08	2.10747E-08	0.0210747
396566.283768877.2	396566.28	3768877	0	0	0	0	0	0	0.000482358	0.000434801	0	0	6.32914E-09	1.76091E-08	2.39382E-08	0.0239382
396666.283768877.2	396666.28	3768877	0	0	0	0	0	0	0.000552135	0.000497699	0	0	7.2447E-09	2.01564E-08	2.74011E-08	0.0274011
396766.283768877.2	396766.28	3768877	0	0	0	0	0	0	0.000643382	0.00057995	0	0	8.44198E-09	2.34875E-08	3.19295E-08	0.0319295
396866.283768877.2	396866.28	3768877	0	0	0	0	0	0	0.000766029	0.000690505	0	0	1.00513E-08	2.79649E-08	3.80161E-08	0.0380161
396966.283768877.2	396966.28	3768877	0	0	0	0	0	0	0.000906747	0.000817349	0	0	1.18977E-08	3.31019E-08	4.49996E-08	0.0449996
397066.283768877.2	397066.28	3768877	0	0	0	0	0	0	0.001068666	0.000963304	0	0	1.40222E-08	3.9013E-08	5.30352E-08	0.0530352
397166.283768877.2	397166.28	3768877	0	0	0	0	0	0	0.001266368	0.001141515	0	0	1.66163E-08	4.62304E-08	6.28467E-08	0.0628467
397266.283768877.2	397266.28	3768877	0	0	0	0	0	0	0.001503611	0.001355367	0	0	1.97293E-08	5.48912E-08	7.46205E-08	0.0746205
397366.283768877.2	397366.28	3768877	0	0	0	0	0	0	0.00172645	0.001556237	0	0	2.26532E-08	6.30263E-08	8.56795E-08	0.0856795
397466.283768877.2	397466.28	3768877	0	0	0	0	0	0	0.001902504	0.001714933	0	0	2.49632E-08	6.94533E-08	9.44166E-08	0.0944166
397566.283768877.2	397566.28	3768877	0	0	0	0	0	0	0.001973981	0.001779363	0	0	2.59011E-08	7.20627E-08	9.79638E-08	0.0979638
397666.283768877.2	397666.28	3768877	0	0	0	0	0	0	0.00190474	0.001716949	0	0	2.49926E-08	6.9535E-08	9.45276E-08	0.0945276
397766.283768877.2	397766.28	3768877	0	0	0	0	0	0	0.001748099	0.001575752	0	0	2.29373E-08	6.38166E-08	8.67539E-08	0.0867539
397866.283768877.2	397866.28	3768877	0	0	0	0	0	0	0.001554154	0.001400928	0	0	2.03925E-08	5.67364E-08	7.71288E-08	0.0771288
3964253767739	396425	3767739	0	0	0	0	0	0	0.000568416	0.000512375	0	0	7.45833E-09	2.07508E-08	2.82091E-08	0.0282091
3964753767739	396475	3767739	0	0	0	0	0	0	0.000620034	0.000558904	0	0	8.13562E-09	2.26351E-08	3.07707E-08	0.0307707
3965253767739	396525	3767739	0	0	0	0	0	0	0.000674335	0.000607851	0	0	8.84812E-09	2.46174E-08	3.34656E-08	0.0334656
3965753767739	396575	3767739	0	0	0	0	0	0	0.000743038	0.000669781	0	0	9.74959E-09	2.71256E-08	3.68752E-08	0.0368752
3966253767739	396625	3767739	0	0	0	0	0	0	0.00080548	0.000726067	0	0	1.05689E-08	2.94051E-08	3.9974E-08	0.039974
3966753767739	396675	3767739	0	0	0	0	0	0	0.000893596	0.000805495	0	0	1.17251E-08	3.26219E-08	4.4347E-08	0.044347
3967253767739	396725	3767739	0	0	0	0	0	0	0.001018569	0.000918147	0	0	1.33649E-08	3.71842E-08	5.05491E-08	0.0505491
3967753767739	396775	3767739	0	0	0	0	0	0	0.001136833	0.001024751	0	0	1.49167E-08	4.15015E-08	5.64182E-08	0.0564182
3968253767739	396825	3767739	0	0	0	0	0	0	0.001301256	0.001172964	0	0	1.70741E-08	4.7504E-08	6.45782E-08	0.0645782
3968753767739	396875	3767739	0	0	0	0	0	0	0.001492607	0.001345449	0	0	1.95849E-08	5.44895E-08	7.40744E-08	0.0740744
3969253767739	396925	3767739	0	0	0	0	0	0	0.001701939	0.001534142	0	0	2.23316E-08	6.21315E-08	8.4463E-08	0.084463
3969753767739	396975	3767739	0	0	0	0	0	0	0.001938555	0.00174743	0	0	2.54363E-08	7.07695E-08	9.62057E-08	0.0962057
3970253767739	397025	3767739	0	0	0	0	0	0	0.00219691	0.001980313	0	0	2.88262E-08	8.0201E-08	1.090027E-07	0.1090272
3970753767739	397075	3767739	0	0	0	0	0	0	0.002463942	0.002221019	0	0	3.233E-08	8.99494E-08	1.22279E-07	0.1222794
3971253767739	397125	3767739	0	0	0	0	0	0	0.002731333	0.002462046	0	0	3.58385E-08	9.97108E-08	1.35549E-07	0.1355493
3971753767739	397175	3767739	0	0	0	0	0	0	0.00299416	0.002698961	0	0	3.92871E-08	1.09306E-07	1.48593E-07	0.1485928
3972253767739	397225	3767739	0	0	0	0	0	0	0.003219058	0.002901686	0	0	4.22381E-08	1.17516E-07	1.59754E-07	0.1597539
3972753767739	397275	3767739	0	0	0	0	0	0	0.003400657	0.003065381	0	0	4.46209E-08	1.24145E-07	1.68766E-07	0.1687662
3973253767739	397325	3767739	0	0	0	0	0	0	0.003458447	0.003117474	0	0	4.53792E-08	1.26255E-07	1.71634E-07	0.1716342

Garvey Reservoir Rehab - Unmitigated Junction Structure			Demolition - 2025	Demolition - 2026	ite Preparation - 202	te Preparation - 202	Grading - 2025	Grading - 2026	nfrastructure - 202	nfrastructure - 202	Paving - 2025	itectural Coating -	Child Risk			
Unique Identifier	X (UTM)	Y (UTM)	1900	1900	1900	1900	1900	1900	2025	2026	1900	1900	3rd Trimester	0<2	Total	per million
3973753767739	397375	3767739	0	0	0	0	0	0	0.003421591	0.003084251	0	0	4.48956E-08	1.2491E-07	1.69805E-07	0.1698051
3974253767739	397425	3767739	0	0	0	0	0	0	0.003326139	0.00299821	0	0	4.36431E-08	1.21425E-07	1.65068E-07	0.1650681
3974753767739	397475	3767739	0	0	0	0	0	0	0.003194367	0.00287943	0	0	4.19141E-08	1.16614E-07	1.58529E-07	0.1585286
3975253767739	397525	3767739	0	0	0	0	0	0	0.002968665	0.002675979	0	0	3.89526E-08	1.08375E-07	1.47328E-07	0.1473275
3964253767789	396425	3767789	0	0	0	0	0	0	0.000578793	0.000521729	0	0	7.5945E-09	2.11296E-08	2.87241E-08	0.0287241
3964753767789	396475	3767789	0	0	0	0	0	0	0.000630321	0.000568177	0	0	8.2706E-09	2.30107E-08	3.12813E-08	0.0312813
3965253767789	396525	3767789	0	0	0	0	0	0	0.000687038	0.000619302	0	0	9.01479E-09	2.50812E-08	3.4096E-08	0.034096
3965753767789	396575	3767789	0	0	0	0	0	0	0.000751716	0.000677603	0	0	9.86345E-09	2.74423E-08	3.73058E-08	0.0373058
3966253767789	396625	3767789	0	0	0	0	0	0	0.000832854	0.000750742	0	0	1.09281E-08	3.04044E-08	4.13325E-08	0.0413325
3966753767789	396675	3767789	0	0	0	0	0	0	0.000934747	0.000842589	0	0	1.22651E-08	3.41241E-08	4.63892E-08	0.0463892
3967253767789	396725	3767789	0	0	0	0	0	0	0.001069202	0.000963788	0	0	1.40293E-08	3.90326E-08	5.30619E-08	0.0530619
3967753767789	396775	3767789	0	0	0	0	0	0	0.00121323	0.001093616	0	0	1.59191E-08	4.42905E-08	6.02096E-08	0.0602096
3968253767789	396825	3767789	0	0	0	0	0	0	0.001396977	0.001259246	0	0	1.83301E-08	5.09984E-08	6.93285E-08	0.0693285
3968753767789	396875	3767789	0	0	0	0	0	0	0.001613644	0.001454552	0	0	2.1173E-08	5.89081E-08	8.00812E-08	0.0800812
3969253767789	396925	3767789	0	0	0	0	0	0	0.001869315	0.001685016	0	0	2.45278E-08	6.82417E-08	9.27695E-08	0.0927695
3969753767789	396975	3767789	0	0	0	0	0	0	0.002175172	0.001960718	0	0	2.8541E-08	7.94074E-08	1.07948E-07	0.1079484
3970253767789	397025	3767789	0	0	0	0	0	0	0.002527815	0.002278594	0	0	3.31681E-08	9.22811E-08	1.25449E-07	0.1254492
3970753767789	397075	3767789	0	0	0	0	0	0	0.002920447	0.002632515	0	0	3.83199E-08	1.06615E-07	1.44935E-07	0.1449346
3971253767789	397125	3767789	0	0	0	0	0	0	0.003337321	0.00300829	0	0	4.37898E-08	1.21833E-07	1.65623E-07	0.165623
3971753767789	397175	3767789	0	0	0	0	0	0	0.00376332	0.003392289	0	0	4.93795E-08	1.37385E-07	1.86764E-07	0.1867643
3972253767789	397225	3767789	0	0	0	0	0	0	0.00415461	0.003745	0	0	5.45137E-08	1.51669E-07	2.06183E-07	0.206183
3972753767789	397275	3767789	0	0	0	0	0	0	0.004500276	0.004056586	0	0	5.90493E-08	1.64288E-07	2.23338E-07	0.2233376
3973253767789	397325	3767789	0	0	0	0	0	0	0.00466792	0.004207702	0	0	6.1249E-08	1.70408E-07	2.31657E-07	0.2316574
3973753767789	397375	3767789	0	0	0	0	0	0	0.004644571	0.004186656	0	0	6.09426E-08	1.69556E-07	2.30499E-07	0.2304986
3974253767789	397425	3767789	0	0	0	0	0	0	0.004476032	0.004034733	0	0	5.87312E-08	1.63403E-07	2.22134E-07	0.2221345
3974753767789	397475	3767789	0	0	0	0	0	0	0.004125178	0.00371847	0	0	5.41275E-08	1.50595E-07	2.04722E-07	0.2047224
3975253767789	397525	3767789	0	0	0	0	0	0	0.003804829	0.003429705	0	0	4.99241E-08	1.389E-07	1.88824E-07	0.1888243
3964253767839	396425	3767839	0	0	0	0	0	0	0.00058765	0.000529712	0	0	7.7107E-09	2.14529E-08	2.91636E-08	0.0291636
3964753767839	396475	3767839	0	0	0	0	0	0	0.000642756	0.000579386	0	0	8.43376E-09	2.34646E-08	3.18984E-08	0.0318984
3965253767839	396525	3767839	0	0	0	0	0	0	0.000697146	0.000628414	0	0	9.14743E-09	2.54502E-08	3.45977E-08	0.0345977
3965753767839	396575	3767839	0	0	0	0	0	0	0.000770055	0.000694134	0	0	1.01041E-08	2.81118E-08	3.82159E-08	0.0382159
3966253767839	396625	3767839	0	0	0	0	0	0	0.000857992	0.000773401	0	0	1.12579E-08	3.13221E-08	4.258E-08	0.04258
3966753767839	396675	3767839	0	0	0	0	0	0	0.000983054	0.000886133	0	0	1.28989E-08	3.58877E-08	4.87866E-08	0.0487866
3967253767839	396725	3767839	0	0	0	0	0	0	0.001118494	0.00100822	0	0	1.4676E-08	4.0832E-08	5.55081E-08	0.0555081
3967753767839	396775	3767839	0	0	0	0	0	0	0.00128086	0.001154578	0	0	1.68065E-08	4.67594E-08	6.35659E-08	0.0635659
3968253767839	396825	3767839	0	0	0	0	0	0	0.001481872	0.001335772	0	0	1.9444E-08	5.40976E-08	7.35417E-08	0.0735417
3968753767839	396875	3767839	0	0	0	0	0	0	0.001730029	0.001559463	0	0	2.27001E-08	6.31569E-08	8.58571E-08	0.0858571
3969253767839	396925	3767839	0	0	0	0	0	0	0.002035528	0.001834842	0	0	2.67087E-08	7.43096E-08	1.01018E-07	0.1010182
3969753767839	396975	3767839	0	0	0	0	0	0	0.002414383	0.002176345	0	0	3.16797E-08	8.81401E-08	1.1982E-07	0.1198199
3970253767839	397025	3767839	0	0	0	0	0	0	0.002874018	0.002590664	0	0	3.77107E-08	1.0492E-07	1.4263E-07	0.1426304
3970753767839	397075	3767839	0	0	0	0	0	0	0.00343662	0.003097798	0	0	4.50928E-08	1.25458E-07	1.70551E-07	0.170551
3971253767839	397125	3767839	0	0	0	0	0	0	0.004066315	0.00366541	0	0	5.33551E-08	1.48446E-07	2.01801E-07	0.2018012
3971753767839	397175	3767839	0	0	0	0	0	0	0.004802644	0.004329144	0	0	6.30167E-08	1.75327E-07	2.38343E-07	0.2383434
3972253767839	397225	3767839	0	0	0	0	0	0	0.00555597	0.005008198	0	0	7.29013E-08	2.02828E-07	2.75729E-07	0.2757291
3972753767839	397275	3767839	0	0	0	0	0	0	0.00615668	0.005549684	0	0	8.07834E-08	2.24758E-07	3.05541E-07	0.3055409
3973253767839	397325	3767839	0	0	0	0	0	0	0.00640439	0.005772971	0	0	8.40336E-08	2.338E-07	3.17834E-07	0.3178341
3973753767839	397375	3767839	0	0	0	0	0	0	0.006659703	0.006003112	0	0	8.73836E-08	2.43121E-07	3.30505E-07	0.3305046
3974753767839	397475	3767839	0	0	0	0	0	0	0.005845366	0.005269063	0	0	7.66985E-08	2.13393E-07	2.90091E-07	0.2900911
3975253767839	397525	3767839	0	0	0	0	0	0	0.004965457	0.004475905	0	0	6.5153E-08	1.8127E-07	2.46423E-07	0.2464234
3964253767889	396425	3767889	0	0	0	0	0	0	0.00059418	0.000535599	0	0	7.79639E-09	2.16913E-08	2.94877E-08	0.0294877
3964753767889	396475	3767889	0	0	0	0	0	0	0.000643561	0.000580111	0	0	8.44433E-09	2.3494E-08	3.19383E-08	0.0319383
3965253767889	396525	3767889	0	0	0	0	0	0	0.000708418	0.000638574	0	0	9.29533E-09	2.58617E-08	3.5157E-08	0.035157
3965753767889	396575	3767889	0	0	0	0	0	0	0.000790272	0.000712358	0	0	1.03694E-08	2.88499E-08	3.92193E-08	0.0392193
3974753767889	397475	3767889	0	0	0	0	0	0	0.008498334	0.00766047	0	0	1.11509E-07	3.10243E-07	4.21751E-07	0.4217513
3975253767889	397525	3767889	0	0	0	0	0	0	0.00645055	0.00581458	0	0	8.46393E-08	2.35486E-07	3.20125E-07	0.3201249
3964253767939	396425	3767939	0	0	0	0	0	0	0.000598832	0.000539792	0	0	7.85743E-09	2.18611E-08	2.97186E-08	0.0297186
3964753767939	396475	3767939	0	0	0	0	0	0	0.000649823	0.000585756	0	0	8.52649E-09	2.37226E-08	3.22491E-08	0.0322491
3965253767939	396525	3767939	0	0	0	0	0	0	0.000718706	0.000647847	0	0	9.43032E-09	2.62373E-08	3.56676E-08	0.0356676
3974753767939	397475	3767939	0	0	0	0	0	0	0.011544469	0.010406282	0	0	1.51478E-07	4.21446E-07	5.72924E-07	0.5729235
3975253767939	397525	3767939	0	0	0	0	0	0	0.008887387	0.008011165	0	0	1.16614E-07	3.24445E-07	4.41059E-07	0.4410591
3964253767989	396425	3767989	0	0	0	0	0	0	0.000597222	0.000538341	0	0	7.8363E-09	2.18023E-08	2.96386E-08	0.0296386
3964753767989	396475	3767989	0	0	0	0	0	0	0.000654743	0.000590191	0	0	8.59105E-09	2.39022E-08	3.24933E-08	0.0324933
3974753767989	397475	3767989	0	0	0	0	0	0	0.018132695	0.016344964	0	0	2.37924E-07	6.61957E-07	8.99881E-07	0.8998809
3975253767989	397525	3767989	0	0	0	0	0	0	0.012527076	0.011292012	0	0	1.64371E-07	4.57317E-07	6.21688E-07	0.6216879
3964253768039	396425	3768039	0	0	0	0	0	0	0.000598206	0.000539228	0	0	7.84921E-09	2.18383E-08	2.96875E-08	0.0296875
3964753768039	396475	3768039	0	0	0	0	0	0	0.000658143	0.000593255	0	0	8.63566E-09	2.40263E-08	3.2662E-08	0.032662
3974753768039	397475	3768039	0	0	0	0	0	0	0.037217671	0.033548323	0	0	4.88342E-07	1.35868E-06	1.84702E-06	1.8470212
3975253768039	397525	3768039	0	0	0	0	0	0	0.022640038	0.020407921	0	0	2.97066E-07	8.26504E-07	1.12357E-06	1.1235692
3964253768089	396425	3768089	0	0	0	0	0	0	0.000598295	0.000539308	0	0	7.85038E-09	2.18415E-08	2.96919E-08	0.0296919

Garvey Reservoir Rehab - Unmitigated Junction Structure			Demolition - 2025	Demolition - 2026	ite Preparation - 202	te Preparation - 202	Grading - 2025	Grading - 2026	nfrastructure - 202	nfrastructure - 202	Paving - 2025	itectural Coating -	Child Risk			
Unique Identifier	X (UTM)	Y (UTM)	1900	1900	1900	1900	1900	1900	2025	2026	1900	1900	3rd Trimester	0<2	Total	per million
3964753768089	396475	3768089	0	0	0	0	0	0	0.000659306	0.000594304	0	0	8.65092E-09	2.40688E-08	3.27197E-08	0.0327197
3974753768089	397475	3768089	0	0	0	0	0	0	0.074525425	0.067177848	0	0	9.77867E-07	2.72065E-06	3.69851E-06	3.6985131
3975253768089	397525	3768089	0	0	0	0	0	0	0.034409851	0.031017331	0	0	4.515E-07	1.25618E-06	1.70768E-06	1.7076761
3964253768139	396425	3768139	0	0	0	0	0	0	0.000599906	0.00054076	0	0	7.87151E-09	2.19003E-08	2.97718E-08	0.0297718
3964753768139	396475	3768139	0	0	0	0	0	0	0.000655996	0.00059132	0	0	8.60749E-09	2.3948E-08	3.25554E-08	0.0325554
3974253768139	397425	3768139	0	0	0	0	0	0	0.567482188	0.51153324	0	0	7.44608E-06	2.07167E-05	2.81627E-05	28.162742
3974753768139	397475	3768139	0	0	0	0	0	0	0.114117312	0.102866309	0	0	1.49736E-06	4.166E-06	5.66336E-06	5.6633608
3975253768139	397525	3768139	0	0	0	0	0	0	0.042639543	0.038435644	0	0	5.59484E-07	1.55661E-06	2.1161E-06	2.1160954
3964253768189	396425	3768189	0	0	0	0	0	0	0.000594359	0.00053576	0	0	7.79874E-09	2.16978E-08	2.94966E-08	0.0294966
3964753768189	396475	3768189	0	0	0	0	0	0	0.000650181	0.000586079	0	0	8.53119E-09	2.37357E-08	3.22669E-08	0.0322669
3973753768189	397375	3768189	0	0	0	0	0	0	0.178264443	0.160689076	0	0	2.33905E-06	6.50777E-06	8.84682E-06	8.8468247
3974253768189	397425	3768189	0	0	0	0	0	0	0.160342869	0.144534417	0	0	2.1039E-06	5.85352E-06	7.95742E-06	7.9574212
3974753768189	397475	3768189	0	0	0	0	0	0	0.088363777	0.079651855	0	0	1.15944E-06	3.22583E-06	4.38528E-06	4.3852764
3975253768189	397525	3768189	0	0	0	0	0	0	0.042529688	0.03833662	0	0	5.58043E-07	1.5526E-06	2.11064E-06	2.1106436
3964253768239	396425	3768239	0	0	0	0	0	0	0.000586845	0.000528987	0	0	7.70014E-09	2.14235E-08	2.91237E-08	0.0291237
3964753768239	396475	3768239	0	0	0	0	0	0	0.000641861	0.000578579	0	0	8.42203E-09	2.3432E-08	3.1854E-08	0.031854
3973753768239	397375	3768239	0	0	0	0	0	0	0.06758384	0.060920645	0	0	8.86785E-07	2.46723E-06	3.35402E-06	3.3540193
3974253768239	397425	3768239	0	0	0	0	0	0	0.063736429	0.057452556	0	0	8.36302E-07	2.32678E-06	3.16308E-06	3.1630818
3974753768239	397475	3768239	0	0	0	0	0	0	0.047970704	0.043241198	0	0	6.29436E-07	1.75123E-06	2.38067E-06	2.3806678
3975253768239	397525	3768239	0	0	0	0	0	0	0.031450669	0.028349899	0	0	4.12672E-07	1.14815E-06	1.56082E-06	1.5608192
3964253768289	396425	3768289	0	0	0	0	0	0	0.000576825	0.000519955	0	0	7.56867E-09	2.10577E-08	2.86264E-08	0.0286264
3964753768289	396475	3768289	0	0	0	0	0	0	0.000631395	0.000569145	0	0	8.28469E-09	2.30499E-08	3.13346E-08	0.0313346
3973253768289	397325	3768289	0	0	0	0	0	0	0.025321453	0.022824971	0	0	3.32249E-07	9.24392E-07	1.25664E-06	1.2566413
3973753768289	397375	3768289	0	0	0	0	0	0	0.034987929	0.031538415	0	0	4.59085E-07	1.27728E-06	1.73636E-06	1.7363647
3974253768289	397425	3768289	0	0	0	0	0	0	0.03950556	0.035610645	0	0	5.18362E-07	1.4422E-06	1.96056E-06	1.9605635
3974753768289	397475	3768289	0	0	0	0	0	0	0.035084454	0.031625424	0	0	4.60352E-07	1.2808E-06	1.74115E-06	1.741155
3975253768289	397525	3768289	0	0	0	0	0	0	0.02617202	0.02359168	0	0	3.4341E-07	9.55443E-07	1.29885E-06	1.2988528
3964253768339	396425	3768339	0	0	0	0	0	0	0.000566806	0.000510924	0	0	7.43721E-09	2.0692E-08	2.81292E-08	0.0281292
3964753768339	396475	3768339	0	0	0	0	0	0	0.000619139	0.000558097	0	0	8.12388E-09	2.26025E-08	3.07263E-08	0.0307263
3965253768339	396525	3768339	0	0	0	0	0	0	0.000682654	0.00061535	0	0	8.95728E-09	2.49212E-08	3.38784E-08	0.0338784
3972753768339	397275	3768339	0	0	0	0	0	0	0.012182305	0.010981232	0	0	1.59847E-07	4.44731E-07	6.04578E-07	0.6045777
3973253768339	397325	3768339	0	0	0	0	0	0	0.016645634	0.015004515	0	0	2.18412E-07	6.0767E-07	8.26082E-07	0.8260818
3973753768339	397375	3768339	0	0	0	0	0	0	0.021264173	0.019167705	0	0	2.79013E-07	7.76276E-07	1.05529E-06	1.0552885
3974253768339	397425	3768339	0	0	0	0	0	0	0.023857383	0.021505246	0	0	3.13039E-07	8.70944E-07	1.18398E-06	1.1839831
3974753768339	397475	3768339	0	0	0	0	0	0	0.022960208	0.020696525	0	0	3.01267E-07	8.38192E-07	1.13946E-06	1.1394585
3975253768339	397525	3768339	0	0	0	0	0	0	0.019495946	0.01757381	0	0	2.55811E-07	7.11724E-07	9.67536E-07	0.9675357
3964253768389	396425	3768389	0	0	0	0	0	0	0.000554371	0.000499715	0	0	7.27405E-09	2.0238E-08	2.75121E-08	0.0275121
3964753768389	396475	3768389	0	0	0	0	0	0	0.000604736	0.000545114	0	0	7.9349E-09	2.20767E-08	3.00116E-08	0.0300116
3965253768389	396525	3768389	0	0	0	0	0	0	0.000664763	0.000599223	0	0	8.72252E-09	2.4268E-08	3.29905E-08	0.0329905
3972253768389	397225	3768389	0	0	0	0	0	0	0.006970122	0.006282927	0	0	9.14567E-08	2.54453E-07	3.4591E-07	0.34591
3972753768389	397275	3768389	0	0	0	0	0	0	0.009095019	0.008198327	0	0	1.19338E-07	3.32025E-07	4.51363E-07	0.4513634
3973253768389	397325	3768389	0	0	0	0	0	0	0.01168125	0.010529578	0	0	1.53273E-07	4.26439E-07	5.79712E-07	0.5797117
3973753768389	397375	3768389	0	0	0	0	0	0	0.014230983	0.012827928	0	0	1.86728E-07	5.1952E-07	7.06249E-07	0.7062486
3974253768389	397425	3768389	0	0	0	0	0	0	0.015789431	0.014232727	0	0	2.07177E-07	5.76413E-07	7.83591E-07	0.7835905
3974753768389	397475	3768389	0	0	0	0	0	0	0.015743092	0.014190956	0	0	2.06569E-07	5.74722E-07	7.81291E-07	0.7812908
3975253768389	397525	3768389	0	0	0	0	0	0	0.014237871	0.012834138	0	0	1.86819E-07	5.19772E-07	7.0659E-07	0.7065904
3964253768439	396425	3768439	0	0	0	0	0	0	0.000541758	0.000488345	0	0	7.10854E-09	1.97776E-08	2.68861E-08	0.0268861
3964753768439	396475	3768439	0	0	0	0	0	0	0.000588992	0.000530922	0	0	7.72831E-09	2.15019E-08	2.92302E-08	0.0292302
3965253768439	396525	3768439	0	0	0	0	0	0	0.000645082	0.000581482	0	0	8.46428E-09	2.35495E-08	3.20138E-08	0.0320138
3971753768439	397175	3768439	0	0	0	0	0	0	0.004407329	0.003972803	0	0	5.78297E-08	1.60895E-07	2.18725E-07	0.2187249
3972253768439	397225	3768439	0	0	0	0	0	0	0.005599983	0.005047872	0	0	7.34788E-08	2.04435E-07	2.77913E-07	0.2779134
3972753768439	397275	3768439	0	0	0	0	0	0	0.007004206	0.00631365	0	0	9.1904E-08	2.55698E-07	3.47601E-07	0.3476015
3973253768439	397325	3768439	0	0	0	0	0	0	0.008589581	0.007742721	0	0	1.12706E-07	3.13574E-07	4.2628E-07	0.4262797
3973753768439	397375	3768439	0	0	0	0	0	0	0.010146508	0.009146148	0	0	1.33135E-07	3.70411E-07	5.03546E-07	0.5035462
3974253768439	397425	3768439	0	0	0	0	0	0	0.011245411	0.010136708	0	0	1.47554E-07	4.10528E-07	5.58082E-07	0.558082
3974753768439	397475	3768439	0	0	0	0	0	0	0.011393911	0.010270568	0	0	1.49502E-07	4.15949E-07	5.65452E-07	0.5654517
3975253768439	397525	3768439	0	0	0	0	0	0	0.01071743	0.009660782	0	0	1.40626E-07	3.91253E-07	5.3188E-07	0.5318796
3964253768489	396425	3768489	0	0	0	0	0	0	0.000526908	0.000474959	0	0	6.91369E-09	1.92354E-08	2.61491E-08	0.0261491
3964753768489	396475	3768489	0	0	0	0	0	0	0.000571637	0.000515278	0	0	7.50059E-09	2.08683E-08	2.83689E-08	0.0283689
3965253768489	396525	3768489	0	0	0	0	0	0	0.000624417	0.000562855	0	0	8.19313E-09	2.27951E-08	3.09883E-08	0.0309883
3970753768489	397075	3768489	0	0	0	0	0	0	0.002509029	0.00226166	0	0	3.29216E-08	9.15953E-08	1.24517E-07	0.1245169
3971253768489	397125	3768489	0	0	0	0	0	0	0.00301402	0.002716863	0	0	3.95477E-08	1.10031E-07	1.49578E-07	0.1495784
3971753768489	397175	3768489	0	0	0	0	0	0	0.003685313	0.003321972	0	0	4.83559E-08	1.34537E-07	1.82893E-07	0.182893
3972253768489	397225	3768489	0	0	0	0	0	0	0.004546346	0.004098115	0	0	5.96538E-08	1.6597E-07	2.25624E-07	0.225624
3972753768489	397275	3768489	0	0	0	0	0	0	0.005533963	0.004988361	0	0	7.26125E-08	2.02024E-07	2.74637E-07	0.2746369
3973253768489	397325	3768489	0	0	0	0	0	0	0.006526947	0.005883445	0	0	8.56417E-08	2.38275E-07	3.23916E-07	0.3239163
3973753768489	397375	3768489	0	0	0	0	0	0	0.007557861	0.00681272	0	0	9.91686E-08	2.75909E-07	3.75078E-07	0.375078
3974253768489	397425	3768489	0	0	0	0	0	0	0.008296427	0.007478469	0	0	1.0886E-07	3.02872E-07	4.11731E-07	0.4117312
3974753768489	397475	3768489	0	0	0	0	0	0	0.008316376	0.007496452	0	0	1.09121E-07	3.036E-07	4.12721E-07	0.4127212

Garvey Reservoir Rehab - Unmitigated Junction Structure			Demolition - 2025	Demolition - 2026	ite Preparation - 202	te Preparation - 202	Grading - 2025	Grading - 2026	nfrastructure - 202	nfrastructure - 202	Paving - 2025	itectural Coating -	Child Risk			
Unique Identifier	X (UTM)	Y (UTM)	1900	1900	1900	1900	1900	1900	2025	2026	1900	1900	3rd Trimester	0<2	Total	per million
3975253768489	397525	3768489	0	0	0	0	0	0	0.008156246	0.007352109	0	0	1.0702E-07	2.97754E-07	4.04774E-07	0.4047744
3964253768539	396425	3768539	0	0	0	0	0	0	0.000511432	0.000461009	0	0	6.71062E-09	1.86705E-08	2.53811E-08	0.0253811
3964753768539	396475	3768539	0	0	0	0	0	0	0.000553745	0.000499151	0	0	7.26583E-09	2.02152E-08	2.7481E-08	0.027481
3965253768539	396525	3768539	0	0	0	0	0	0	0.00060241	0.000543018	0	0	7.90438E-09	2.19918E-08	2.98961E-08	0.0298961
3965753768539	396575	3768539	0	0	0	0	0	0	0.000652686	0.000588336	0	0	8.56406E-09	2.38271E-08	3.23912E-08	0.0323912
3970253768539	397025	3768539	0	0	0	0	0	0	0.001898031	0.001710901	0	0	2.49045E-08	6.92901E-08	9.41946E-08	0.0941946
3970753768539	397075	3768539	0	0	0	0	0	0	0.002224016	0.002004747	0	0	2.91819E-08	8.11906E-08	1.10372E-07	0.1103724
3971253768539	397125	3768539	0	0	0	0	0	0	0.002623893	0.0023652	0	0	3.44288E-08	9.57886E-08	1.30217E-07	0.1302174
3971753768539	397175	3768539	0	0	0	0	0	0	0.003135504	0.00282637	0	0	4.11417E-08	1.14466E-07	1.55607E-07	0.1556073
3972253768539	397225	3768539	0	0	0	0	0	0	0.003746144	0.003376806	0	0	4.91541E-08	1.36758E-07	1.85912E-07	0.1859119
3972753768539	397275	3768539	0	0	0	0	0	0	0.004469502	0.004028847	0	0	5.86455E-08	1.63165E-07	2.2181E-07	0.2218104
3973253768539	397325	3768539	0	0	0	0	0	0	0.005167185	0.004657744	0	0	6.77999E-08	1.88635E-07	2.56435E-07	0.2564347
3973753768539	397375	3768539	0	0	0	0	0	0	0.005863616	0.005285513	0	0	7.6938E-08	2.14059E-07	2.90997E-07	0.2909968
3974253768539	397425	3768539	0	0	0	0	0	0	0.006227531	0.005613549	0	0	8.1713E-08	2.27344E-07	3.09057E-07	0.309057
3974753768539	397475	3768539	0	0	0	0	0	0	0.006402332	0.005771116	0	0	8.40066E-08	2.33725E-07	3.17732E-07	0.317732
3975253768539	397525	3768539	0	0	0	0	0	0	0.006313769	0.005691284	0	0	8.28446E-08	2.30492E-07	3.13337E-07	0.3133368
3964253768589	396425	3768589	0	0	0	0	0	0	0.00049193	0.00044343	0	0	6.45473E-09	1.79585E-08	2.44133E-08	0.0244133
3964753768589	396475	3768589	0	0	0	0	0	0	0.000534959	0.000482217	0	0	7.01933E-09	1.95294E-08	2.65487E-08	0.0265487
3965253768589	396525	3768589	0	0	0	0	0	0	0.000578167	0.000521165	0	0	7.58628E-09	2.11067E-08	2.8693E-08	0.028693
3965753768589	396575	3768589	0	0	0	0	0	0	0.000622628	0.000561242	0	0	8.16966E-09	2.27298E-08	3.08995E-08	0.0308995
3966253768589	396625	3768589	0	0	0	0	0	0	0.000656532	0.000591804	0	0	8.61453E-09	2.39676E-08	3.25821E-08	0.0325821
3968253768589	396825	3768589	0	0	0	0	0	0	0.001038787	0.000936371	0	0	1.36302E-08	3.79222E-08	5.15524E-08	0.0515524
3968753768589	396875	3768589	0	0	0	0	0	0	0.001167785	0.001052651	0	0	1.53228E-08	4.26315E-08	5.79543E-08	0.0579543
3969253768589	396925	3768589	0	0	0	0	0	0	0.001315033	0.001185382	0	0	1.72549E-08	4.8007E-08	6.52618E-08	0.0652618
3969753768589	396975	3768589	0	0	0	0	0	0	0.001503342	0.001355125	0	0	1.97257E-08	5.48814E-08	7.46072E-08	0.0746072
3970253768589	397025	3768589	0	0	0	0	0	0	0.001725466	0.00155535	0	0	2.26403E-08	6.29904E-08	8.56306E-08	0.0856306
3970753768589	397075	3768589	0	0	0	0	0	0	0.001981853	0.001786459	0	0	2.60044E-08	7.23501E-08	9.83545E-08	0.0983545
3971253768589	397125	3768589	0	0	0	0	0	0	0.002312401	0.002084417	0	0	3.03416E-08	8.44171E-08	1.14759E-07	0.1147587
3971753768589	397175	3768589	0	0	0	0	0	0	0.002699843	0.002433662	0	0	3.54253E-08	9.85612E-08	1.33987E-07	0.1339866
3972253768589	397225	3768589	0	0	0	0	0	0	0.00314275	0.002832901	0	0	4.12368E-08	1.1473E-07	1.55967E-07	0.1559669
3972753768589	397275	3768589	0	0	0	0	0	0	0.003644431	0.003285121	0	0	4.78195E-08	1.33045E-07	1.80864E-07	0.1808641
3973253768589	397325	3768589	0	0	0	0	0	0	0.004194061	0.003780562	0	0	5.50313E-08	1.5311E-07	2.08141E-07	0.2081409
3973753768589	397375	3768589	0	0	0	0	0	0	0.004677581	0.004216411	0	0	6.13757E-08	1.70761E-07	2.32137E-07	0.2321368
3974253768589	397425	3768589	0	0	0	0	0	0	0.004891118	0.004408895	0	0	6.41776E-08	1.78557E-07	2.42734E-07	0.2427341
3974753768589	397475	3768589	0	0	0	0	0	0	0.005041228	0.004544206	0	0	6.61472E-08	1.84036E-07	2.50184E-07	0.2501837
3975253768589	397525	3768589	0	0	0	0	0	0	0.005041497	0.004544448	0	0	6.61508E-08	1.84046E-07	2.50197E-07	0.250197
3964253768639	396425	3768639	0	0	0	0	0	0	0.000454626	0.000409803	0	0	5.96526E-09	1.65967E-08	2.2562E-08	0.022562
3964753768639	396475	3768639	0	0	0	0	0	0	0.000515636	0.000464799	0	0	6.76579E-09	1.8824E-08	2.55897E-08	0.0255897
3965253768639	396525	3768639	0	0	0	0	0	0	0.000534422	0.000481733	0	0	7.01229E-09	1.95098E-08	2.65221E-08	0.0265221
3965753768639	396575	3768639	0	0	0	0	0	0	0.000596506	0.000537696	0	0	7.82691E-09	2.17762E-08	2.96031E-08	0.0296031
3966253768639	396625	3768639	0	0	0	0	0	0	0.000652328	0.000588014	0	0	8.55936E-09	2.38141E-08	3.23734E-08	0.0323734
3966753768639	396675	3768639	0	0	0	0	0	0	0.000718348	0.000647525	0	0	9.42563E-09	2.62242E-08	3.56498E-08	0.0356498
3967253768639	396725	3768639	0	0	0	0	0	0	0.000791614	0.000713568	0	0	1.0387E-08	2.88989E-08	3.92859E-08	0.0392859
3967753768639	396775	3768639	0	0	0	0	0	0	0.000874094	0.000787916	0	0	1.14692E-08	3.19099E-08	4.33791E-08	0.0433791
3968253768639	396825	3768639	0	0	0	0	0	0	0.00097062	0.000874925	0	0	1.27357E-08	3.54337E-08	4.81695E-08	0.0481695
3968753768639	396875	3768639	0	0	0	0	0	0	0.001082353	0.000975642	0	0	1.42018E-08	3.95127E-08	5.37145E-08	0.0537145
3969253768639	396925	3768639	0	0	0	0	0	0	0.001212872	0.001093293	0	0	1.59144E-08	4.42774E-08	6.01918E-08	0.0601918
3969753768639	396975	3768639	0	0	0	0	0	0	0.001371749	0.001236506	0	0	1.79991E-08	5.00775E-08	6.80765E-08	0.0680765
3970253768639	397025	3768639	0	0	0	0	0	0	0.00155648	0.001403024	0	0	2.0423E-08	5.68213E-08	7.72443E-08	0.0772443
3970753768639	397075	3768639	0	0	0	0	0	0	0.001764828	0.001590831	0	0	2.31568E-08	6.44273E-08	8.75841E-08	0.0875841
3971253768639	397125	3768639	0	0	0	0	0	0	0.001994019	0.001797426	0	0	2.6164E-08	7.27942E-08	9.89583E-08	0.0989583
3971753768639	397175	3768639	0	0	0	0	0	0	0.002323404	0.002094336	0	0	3.0486E-08	8.48188E-08	1.15305E-07	0.1153048
3972253768639	397225	3768639	0	0	0	0	0	0	0.002668801	0.00240568	0	0	3.5018E-08	9.7428E-08	1.32446E-07	0.132446
3972753768639	397275	3768639	0	0	0	0	0	0	0.003054723	0.002753553	0	0	4.00818E-08	1.11517E-07	1.51598E-07	0.1515984
3973253768639	397325	3768639	0	0	0	0	0	0	0.003456121	0.003115377	0	0	4.53486E-08	1.2617E-07	1.71519E-07	0.1715188
3973753768639	397375	3768639	0	0	0	0	0	0	0.003813327	0.003437365	0	0	5.00356E-08	1.3921E-07	1.89246E-07	0.189246
3974253768639	397425	3768639	0	0	0	0	0	0	0.00409843	0.00369436	0	0	5.37765E-08	1.49618E-07	2.03395E-07	0.203395
3974753768639	397475	3768639	0	0	0	0	0	0	0.004077676	0.003675651	0	0	5.35042E-08	1.48861E-07	2.02365E-07	0.202365
3975253768639	397525	3768639	0	0	0	0	0	0	0.004121152	0.003714842	0	0	5.40747E-08	1.50448E-07	2.04523E-07	0.2045226
3964253768689	396425	3768689	0	0	0	0	0	0	0.000430293	0.00038787	0	0	5.64598E-09	1.57084E-08	2.13544E-08	0.0213544
3964753768689	396475	3768689	0	0	0	0	0	0	0.000496313	0.000447381	0	0	6.51225E-09	1.81185E-08	2.46308E-08	0.0246308
3965253768689	396525	3768689	0	0	0	0	0	0	0.000534512	0.000481813	0	0	7.01346E-09	1.9513E-08	2.65265E-08	0.0265265
3965753768689	396575	3768689	0	0	0	0	0	0	0.000578167	0.000521165	0	0	7.58628E-09	2.11067E-08	2.8693E-08	0.028693
3966253768689	396625	3768689	0	0	0	0	0	0	0.000626832	0.000565032	0	0	8.22483E-09	2.28833E-08	3.11081E-08	0.0311081
3966753768689	396675	3768689	0	0	0	0	0	0	0.000682744	0.000615431	0	0	8.95845E-09	2.49244E-08	3.38829E-08	0.0338829
3967253768689	396725	3768689	0	0	0	0	0	0	0.000745633	0.00067212	0	0	9.78363E-09	2.72203E-08	3.70039E-08	0.0370039
3967753768689	396775	3768689	0	0	0	0	0	0	0.000818273	0.000737598	0	0	1.07368E-08	2.98721E-08	4.06089E-08	0.0406089
3968253768689	396825	3768689	0	0	0	0	0	0	0.000902274	0.000813317	0	0	1.1839E-08	3.29387E-08	4.47776E-08	0.0447776
3968753768689	396875	3768689	0	0	0	0	0	0	0.001001214	0.000902503	0	0	1.31372E-08	3.65506E-08	4.96878E-08	0.0496878

Garvey Reservoir Rehab - Unmitigated Junction Structure			Demolition - 2025	Demolition - 2026	ite Preparation - 202	te Preparation - 202	Grading - 2025	Grading - 2026	nfrastructure - 202	nfrastructure - 202	Paving - 2025	itectural Coating -	Child Risk			
Unique Identifier	X (UTM)	Y (UTM)	1900	1900	1900	1900	1900	1900	2025	2026	1900	1900	3rd Trimester	0<2	Total	per million
3969253768689	396925	3768689	0	0	0	0	0	0	0.001114558	0.001004672	0	0	1.46244E-08	4.06884E-08	5.53127E-08	0.0553127
3969753768689	396975	3768689	0	0	0	0	0	0	0.001247045	0.001124097	0	0	1.63628E-08	4.5525E-08	6.18878E-08	0.0618878
3970253768689	397025	3768689	0	0	0	0	0	0	0.001402523	0.001264246	0	0	1.84029E-08	5.12009E-08	6.96038E-08	0.0696038
3970753768689	397075	3768689	0	0	0	0	0	0	0.001585017	0.001428748	0	0	2.07974E-08	5.78631E-08	7.86605E-08	0.0786605
3971253768689	397125	3768689	0	0	0	0	0	0	0.001763844	0.001589944	0	0	2.31438E-08	6.43914E-08	8.75352E-08	0.0875352
3971753768689	397175	3768689	0	0	0	0	0	0	0.002019426	0.001820327	0	0	2.64974E-08	7.37217E-08	1.00219E-07	0.1002191
3972253768689	397225	3768689	0	0	0	0	0	0	0.002298445	0.002071838	0	0	3.01585E-08	8.39077E-08	1.14066E-07	0.1140662
3972753768689	397275	3768689	0	0	0	0	0	0	0.002588647	0.002333428	0	0	3.39663E-08	9.45019E-08	1.28468E-07	0.1284682
3973253768689	397325	3768689	0	0	0	0	0	0	0.002889136	0.002604292	0	0	3.79091E-08	1.05472E-07	1.43381E-07	0.1433807
3973753768689	397375	3768689	0	0	0	0	0	0	0.003166009	0.002853867	0	0	4.1542E-08	1.15579E-07	1.57121E-07	0.1571212
3974253768689	397425	3768689	0	0	0	0	0	0	0.003388133	0.003054092	0	0	4.44566E-08	1.23688E-07	1.68145E-07	0.1681447
3974753768689	397475	3768689	0	0	0	0	0	0	0.003530998	0.003182871	0	0	4.63311E-08	1.28904E-07	1.75235E-07	0.1752347
3975253768689	397525	3768689	0	0	0	0	0	0	0.003576979	0.003224319	0	0	4.69344E-08	1.30582E-07	1.77517E-07	0.1775167

Garvey Reservoir Rehab - Unmitigated Junction Structure

Offroad DPM Emissions, Ground Level Concentrations and Health Risk Calculations

Residential Receptors

Phase	Year	Emissions (lbs/day)	Meters	lbs/meter	meters (h1)	lbs/day (H1)	g/s (H1)	meters (h2)	lbs/day (H2)	g/s (H2)	hrs/day
Demolition - 2025	1900		1932.1	0	691.2	0	0	1240.9	0	0	10.00
Demolition - 2026	1900		1932.1	0	691.2	0	0	1240.9	0	0	10.00
Site Preparation - 2025	1900		1932.1	0	691.2	0	0	1240.9	0	0	10.00
Site Preparation - 2026	1900		1932.1	0	691.2	0	0	1240.9	0	0	10.00
Grading - 2025	1900		1932.1	0	691.2	0	0	1240.9	0	0	10.00
Grading - 2026	1900		1932.1	0	691.2	0	0	1240.9	0	0	10.00
Infrastructure - 2025	2025		1932.1	0	691.2	0	0	1240.9	0	0	10.00
Infrastructure - 2026	2026	0.0100	1932.1	5.17572E-06	691.2	0.003577455	4.50749E-05	1240.9	0.006422545	8.09223E-05	10.00
Paving - 2025	1900	0.0100	1932.1	5.17572E-06	691.2	0.003577455	4.50749E-05	1240.9	0.006422545	8.09223E-05	10.00
Architectural Coating - 2026	1900		1932.1	0	691.2	0	0	1240.9	0	0	10.00

		AERMOD Column Identifier:	*5*	*5*	*5*	*5*	*5*	*5*	*5*	*5*	*5*	*5*				
			6	*6*	*6*	*6*	*6*	*6*	*6*	*6*	*6*	*6*			*MAX:*	0.046037
Garvey Reservoir Rehab - Unmitigated Junction Structure			Demolition - 2025	Demolition - 2026	Site Preparation - 2025	te Preparation - 202	Grading - 2025	Grading - 2026	Infrastructure - 2025	nfrastructure - 2026	Paving - 2025	rchitectural Coating - 202	Child Risk			
Unique Identifier	X (UTM)	Y (UTM)	1900	1900	1900	1900	1900	1900	2025	2026	1900	1900	3rd Trimester	0<2	Total	per million
396166.283767377.2	396166.28	3767377	0	0	0	0	0	0	0	3.83011E-06	3.83011E-06	0	1.71245E-11	1.55116E-10	1.72241E-10	0.0001722
396266.283767377.2	396266.28	3767377	0	0	0	0	0	0	0	3.91694E-06	3.91694E-06	0	1.75127E-11	1.58633E-10	1.76146E-10	0.0001761
396366.283767377.2	396366.28	3767377	0	0	0	0	0	0	0	4.07625E-06	4.07625E-06	0	1.82249E-11	1.65085E-10	1.8331E-10	0.0001833
396466.283767377.2	396466.28	3767377	0	0	0	0	0	0	0	4.18245E-06	4.18245E-06	0	1.86998E-11	1.69386E-10	1.88086E-10	0.0001881
396566.283767377.2	396566.28	3767377	0	0	0	0	0	0	0	4.58512E-06	4.58512E-06	0	2.05001E-11	1.85693E-10	2.06193E-10	0.0002062
396666.283767377.2	396666.28	3767377	0	0	0	0	0	0	0	4.33497E-06	4.33497E-06	0	1.93817E-11	1.75563E-10	1.94944E-10	0.0001949
396766.283767377.2	396766.28	3767377	0	0	0	0	0	0	0	4.31797E-06	4.31797E-06	0	1.93057E-11	1.74874E-10	1.9418E-10	0.0001942
396866.283767377.2	396866.28	3767377	0	0	0	0	0	0	0	4.32176E-06	4.32176E-06	0	1.93226E-11	1.75027E-10	1.9435E-10	0.0001944
396966.283767377.2	396966.28	3767377	0	0	0	0	0	0	0	4.37894E-06	4.37894E-06	0	1.95783E-11	1.77343E-10	1.96922E-10	0.0001969
397066.283767377.2	397066.28	3767377	0	0	0	0	0	0	0	4.26851E-06	4.26851E-06	0	1.90845E-11	1.72871E-10	1.91956E-10	0.000192
397166.283767377.2	397166.28	3767377	0	0	0	0	0	0	0	4.21012E-06	4.21012E-06	0	1.88235E-11	1.70506E-10	1.8933E-10	0.0001893
397266.283767377.2	397266.28	3767377	0	0	0	0	0	0	0	4.2152E-06	4.2152E-06	0	1.88462E-11	1.70712E-10	1.89558E-10	0.0001896
397366.283767377.2	397366.28	3767377	0	0	0	0	0	0	0	4.02305E-06	4.02305E-06	0	1.79871E-11	1.6293E-10	1.80917E-10	0.0001809
397466.283767377.2	397466.28	3767377	0	0	0	0	0	0	0	3.62179E-06	3.62179E-06	0	1.6193E-11	1.46679E-10	1.62872E-10	0.0001629
397566.283767377.2	397566.28	3767377	0	0	0	0	0	0	0	3.56251E-06	3.56251E-06	0	1.5928E-11	1.44279E-10	1.60206E-10	0.0001602
397666.283767377.2	397666.28	3767377	0	0	0	0	0	0	0	3.45794E-06	3.45794E-06	0	1.54605E-11	1.40043E-10	1.55504E-10	0.0001555
397766.283767377.2	397766.28	3767377	0	0	0	0	0	0	0	3.56871E-06	3.56871E-06	0	1.59557E-11	1.4453E-10	1.60486E-10	0.0001605
397866.283767377.2	397866.28	3767377	0	0	0	0	0	0	0	3.39922E-06	3.39922E-06	0	1.51979E-11	1.37665E-10	1.52863E-10	0.0001529
396166.283767477.2	396166.28	3767477	0	0	0	0	0	0	0	4.40759E-06	4.40759E-06	0	1.97064E-11	1.78504E-10	1.9821E-10	0.0001982
396266.283767477.2	396266.28	3767477	0	0	0	0	0	0	0	4.30668E-06	4.30668E-06	0	1.92552E-11	1.74417E-10	1.93672E-10	0.0001937
396366.283767477.2	396366.28	3767477	0	0	0	0	0	0	0	4.53722E-06	4.53722E-06	0	2.02859E-11	1.83753E-10	2.04039E-10	0.000204
396466.283767477.2	396466.28	3767477	0	0	0	0	0	0	0	4.96939E-06	4.96939E-06	0	2.22182E-11	2.01256E-10	2.23474E-10	0.0002235
396566.283767477.2	396566.28	3767477	0	0	0	0	0	0	0	5.03692E-06	5.03692E-06	0	2.25201E-11	2.03991E-10	2.26511E-10	0.0002265
396666.283767477.2	396666.28	3767477	0	0	0	0	0	0	0	4.89066E-06	4.89066E-06	0	2.18662E-11	1.98068E-10	2.19934E-10	0.0002199
396766.283767477.2	396766.28	3767477	0	0	0	0	0	0	0	4.92892E-06	4.92892E-06	0	2.20372E-11	1.99617E-10	2.21654E-10	0.0002217
396866.283767477.2	396866.28	3767477	0	0	0	0	0	0	0	4.9577E-06	4.9577E-06	0	2.21659E-11	2.00783E-10	2.22948E-10	0.0002229
396966.283767477.2	396966.28	3767477	0	0	0	0	0	0	0	5.0315E-06	5.0315E-06	0	2.24959E-11	2.03771E-10	2.26267E-10	0.0002263
397066.283767477.2	397066.28	3767477	0	0	0	0	0	0	0	4.93481E-06	4.93481E-06	0	2.20636E-11	1.99856E-10	2.21919E-10	0.0002219
397166.283767477.2	397166.28	3767477	0	0	0	0	0	0	0	4.77938E-06	4.77938E-06	0	2.13687E-11	1.93561E-10	2.1493E-10	0.0002149
397266.283767477.2	397266.28	3767477	0	0	0	0	0	0	0	4.79518E-06	4.79518E-06	0	2.14393E-11	1.94201E-10	2.1564E-10	0.0002156
397366.283767477.2	397366.28	3767477	0	0	0	0	0	0	0	4.65093E-06	4.65093E-06	0	2.07943E-11	1.88359E-10	2.09153E-10	0.0002092
397466.283767477.2	397466.28	3767477	0	0	0	0	0	0	0	4.19494E-06	4.19494E-06	0	1.87556E-11	1.69892E-10	1.88647E-10	0.0001886
397566.283767477.2	397566.28	3767477	0	0	0	0	0	0	0	3.9783E-06	3.9783E-06	0	1.7787E-11	1.61118E-10	1.78905E-10	0.0001789
397666.283767477.2	397666.28	3767477	0	0	0	0	0	0	0	3.89105E-06	3.89105E-06	0	1.73969E-11	1.57584E-10	1.74981E-10	0.000175
397766.283767477.2	397766.28	3767477	0	0	0	0	0	0	0	3.79864E-06	3.79864E-06	0	1.69837E-11	1.53842E-10	1.70825E-10	0.0001708
397866.283767477.2	397866.28	3767477	0	0	0	0	0	0	0	3.65582E-06	3.65582E-06	0	1.63452E-11	1.48057E-10	1.64403E-10	0.0001644
396166.283767577.2	396166.28	3767577	0	0	0	0	0	0	0	4.64617E-06	4.64617E-06	0	2.0773E-11	1.88166E-10	2.08939E-10	0.0002089
396266.283767577.2	396266.28	3767577	0	0	0	0	0	0	0	4.77621E-06	4.77621E-06	0	2.13545E-11	1.93432E-10	2.14787E-10	0.0002148
396366.283767577.2	396366.28	3767577	0	0	0	0	0	0	0	4.99528E-06	4.99528E-06	0	2.23339E-11	2.02305E-10	2.24639E-10	0.0002246
396466.283767577.2	396466.28	3767577	0	0	0	0	0	0	0	5.30423E-06	5.30423E-06	0	2.37153E-11	2.14817E-10	2.38532E-10	0.0002385
396566.283767577.2	396566.28	3767577	0	0	0	0	0	0	0	5.89209E-06	5.89209E-06	0	2.63436E-11	2.38625E-10	2.64968E-10	0.000265
396666.283767577.2	396666.28	3767577	0	0	0	0	0	0	0	5.9828E-06	5.9828E-06	0	2.67491E-11	2.42298E-10	2.69047E-10	0.000269
396766.283767577.2	396766.28	3767577	0	0	0	0	0	0	0	5.64161E-06	5.64161E-06	0	2.52237E-11	2.28481E-10	2.53704E-10	0.0002537
396866.283767577.2	396866.28	3767577	0	0	0	0	0	0	0	5.78386E-06	5.78386E-06	0	2.58597E-11	2.34241E-10	2.60101E-10	0.0002601

Garvey Reservoir Rehab - Unmitigated Junction Structure			Demolition - 2025	Demolition - 2026	Site Preparation - 2025	ite Preparation - 202	Grading - 2025	Grading - 2026	Infrastructure - 2025	nfrastructure - 2026	Paving - 2025	rchitectural Coating - 202	Child Risk			
Unique Identifier	X (UTM)	Y (UTM)	1900	1900	1900	1900	1900	1900	2025	2026	1900	1900	3rd Trimester	0<2	Total	per million
396966.283767577.2	396966.28	3767577	0	0	0	0	0	0	0	5.86296E-06	5.86296E-06	0	2.62133E-11	2.37445E-10	2.63658E-10	0.0002637
397066.283767577.2	397066.28	3767577	0	0	0	0	0	0	0	5.86437E-06	5.86437E-06	0	2.62196E-11	2.37502E-10	2.63722E-10	0.0002637
397166.283767577.2	397166.28	3767577	0	0	0	0	0	0	0	5.64799E-06	5.64799E-06	0	2.52522E-11	2.28739E-10	2.53991E-10	0.000254
397266.283767577.2	397266.28	3767577	0	0	0	0	0	0	0	5.57311E-06	5.57311E-06	0	2.49174E-11	2.25706E-10	2.50624E-10	0.0002506
397366.283767577.2	397366.28	3767577	0	0	0	0	0	0	0	5.43422E-06	5.43422E-06	0	2.42964E-11	2.20081E-10	2.44378E-10	0.0002444
397466.283767577.2	397466.28	3767577	0	0	0	0	0	0	0	4.84076E-06	4.84076E-06	0	2.16431E-11	1.96047E-10	2.1769E-10	0.0002177
397566.283767577.2	397566.28	3767577	0	0	0	0	0	0	0	4.56601E-06	4.56601E-06	0	2.04147E-11	1.84919E-10	2.05334E-10	0.0002053
397666.283767577.2	397666.28	3767577	0	0	0	0	0	0	0	4.31766E-06	4.31766E-06	0	1.93043E-11	1.74862E-10	1.94166E-10	0.0001942
397766.283767577.2	397766.28	3767577	0	0	0	0	0	0	0	4.15353E-06	4.15353E-06	0	1.85705E-11	1.68214E-10	1.86785E-10	0.0001868
397866.283767577.2	397866.28	3767577	0	0	0	0	0	0	0	3.94844E-06	3.94844E-06	0	1.76535E-11	1.59909E-10	1.77562E-10	0.0001776
396166.283767677.2	396166.28	3767677	0	0	0	0	0	0	0	5.62549E-06	5.62549E-06	0	2.51516E-11	2.27827E-10	2.52979E-10	0.000253
396266.283767677.2	396266.28	3767677	0	0	0	0	0	0	0	5.32253E-06	5.32253E-06	0	2.37971E-11	2.15558E-10	2.39355E-10	0.0002394
396366.283767677.2	396366.28	3767677	0	0	0	0	0	0	0	5.67165E-06	5.67165E-06	0	2.5358E-11	2.29697E-10	2.55055E-10	0.0002551
396466.283767677.2	396466.28	3767677	0	0	0	0	0	0	0	6.70851E-06	6.70851E-06	0	2.99938E-11	2.71689E-10	3.01683E-10	0.0003017
396566.283767677.2	396566.28	3767677	0	0	0	0	0	0	0	6.76935E-06	6.76935E-06	0	3.02658E-11	2.74153E-10	3.04419E-10	0.0003044
396666.283767677.2	396666.28	3767677	0	0	0	0	0	0	0	6.34121E-06	6.34121E-06	0	2.83516E-11	2.56814E-10	2.85165E-10	0.0002852
396766.283767677.2	396766.28	3767677	0	0	0	0	0	0	0	6.60139E-06	6.60139E-06	0	2.95149E-11	2.67351E-10	2.96866E-10	0.0002969
396866.283767677.2	396866.28	3767677	0	0	0	0	0	0	0	6.97234E-06	6.97234E-06	0	3.11734E-11	2.82374E-10	3.13547E-10	0.0003135
396966.283767677.2	396966.28	3767677	0	0	0	0	0	0	0	7.04825E-06	7.04825E-06	0	3.15128E-11	2.85448E-10	3.16961E-10	0.000317
397066.283767677.2	397066.28	3767677	0	0	0	0	0	0	0	7.02703E-06	7.02703E-06	0	3.14179E-11	2.84589E-10	3.16007E-10	0.000316
397166.283767677.2	397166.28	3767677	0	0	0	0	0	0	0	6.87159E-06	6.87159E-06	0	3.07229E-11	2.78294E-10	3.09017E-10	0.000309
397266.283767677.2	397266.28	3767677	0	0	0	0	0	0	0	6.30158E-06	6.30158E-06	0	2.81744E-11	2.55209E-10	2.83383E-10	0.0002834
397366.283767677.2	397366.28	3767677	0	0	0	0	0	0	0	6.41003E-06	6.41003E-06	0	2.86593E-11	2.59601E-10	2.8826E-10	0.0002883
397466.283767677.2	397466.28	3767677	0	0	0	0	0	0	0	5.51298E-06	5.51298E-06	0	2.46486E-11	2.23271E-10	2.47919E-10	0.0002479
397566.283767677.2	397566.28	3767677	0	0	0	0	0	0	0	5.28934E-06	5.28934E-06	0	2.36487E-11	2.14214E-10	2.37862E-10	0.0002379
397666.283767677.2	397666.28	3767677	0	0	0	0	0	0	0	4.98117E-06	4.98117E-06	0	2.22709E-11	2.01733E-10	2.24004E-10	0.000224
397766.283767677.2	397766.28	3767677	0	0	0	0	0	0	0	4.64986E-06	4.64986E-06	0	2.07895E-11	1.88315E-10	2.09105E-10	0.0002091
397866.283767677.2	397866.28	3767677	0	0	0	0	0	0	0	4.42501E-06	4.42501E-06	0	1.97843E-11	1.79209E-10	1.98994E-10	0.000199
396166.283767777.2	396166.28	3767777	0	0	0	0	0	0	0	6.31355E-06	6.31355E-06	0	2.82279E-11	2.55694E-10	2.83921E-10	0.0002839
396266.283767777.2	396266.28	3767777	0	0	0	0	0	0	0	7.17219E-06	7.17219E-06	0	3.20669E-11	2.90468E-10	3.22535E-10	0.0003225
396366.283767777.2	396366.28	3767777	0	0	0	0	0	0	0	6.98034E-06	6.98034E-06	0	3.12091E-11	2.82698E-10	3.13907E-10	0.0003139
396466.283767777.2	396466.28	3767777	0	0	0	0	0	0	0	7.36938E-06	7.36938E-06	0	3.29486E-11	2.98454E-10	3.31402E-10	0.0003314
396566.283767777.2	396566.28	3767777	0	0	0	0	0	0	0	6.97725E-06	6.97725E-06	0	3.11953E-11	2.82573E-10	3.13768E-10	0.0003138
396666.283767777.2	396666.28	3767777	0	0	0	0	0	0	0	7.33794E-06	7.33794E-06	0	3.2808E-11	2.97181E-10	3.29989E-10	0.00033
396766.283767777.2	396766.28	3767777	0	0	0	0	0	0	0	8.04307E-06	8.04307E-06	0	3.59606E-11	3.25738E-10	3.61698E-10	0.0003617
396866.283767777.2	396866.28	3767777	0	0	0	0	0	0	0	8.58934E-06	8.58934E-06	0	3.8403E-11	3.47861E-10	3.86264E-10	0.0003863
396966.283767777.2	396966.28	3767777	0	0	0	0	0	0	0	8.48403E-06	8.48403E-06	0	3.79322E-11	3.43596E-10	3.81528E-10	0.0003815
397066.283767777.2	397066.28	3767777	0	0	0	0	0	0	0	8.49567E-06	8.49567E-06	0	3.79842E-11	3.44067E-10	3.82052E-10	0.0003821
397166.283767777.2	397166.28	3767777	0	0	0	0	0	0	0	8.50727E-06	8.50727E-06	0	3.80361E-11	3.44537E-10	3.82573E-10	0.0003826
397266.283767777.2	397266.28	3767777	0	0	0	0	0	0	0	7.91515E-06	7.91515E-06	0	3.53887E-11	3.20557E-10	3.55945E-10	0.0003559
397366.283767777.2	397366.28	3767777	0	0	0	0	0	0	0	7.76167E-06	7.76167E-06	0	3.47025E-11	3.14341E-10	3.49043E-10	0.000349
397466.283767777.2	397466.28	3767777	0	0	0	0	0	0	0	6.69808E-06	6.69808E-06	0	2.99472E-11	2.71267E-10	3.01214E-10	0.0003012
397566.283767777.2	397566.28	3767777	0	0	0	0	0	0	0	6.17864E-06	6.17864E-06	0	2.76248E-11	2.5023E-10	2.77855E-10	0.0002779
397666.283767777.2	397666.28	3767777	0	0	0	0	0	0	0	5.88008E-06	5.88008E-06	0	2.62899E-11	2.38138E-10	2.64428E-10	0.0002644
397766.283767777.2	397766.28	3767777	0	0	0	0	0	0	0	5.25012E-06	5.25012E-06	0	2.34733E-11	2.12626E-10	2.36099E-10	0.0002361
397866.283767777.2	397866.28	3767777	0	0	0	0	0	0	0	4.7865E-06	4.7865E-06	0	2.14005E-11	1.93849E-10	2.1525E-10	0.0002152
396166.283767877.2	396166.28	3767877	0	0	0	0	0	0	0	6.97761E-06	6.97761E-06	0	3.1197E-11	2.82587E-10	3.13784E-10	0.0003138
396266.283767877.2	396266.28	3767877	0	0	0	0	0	0	0	8.05927E-06	8.05927E-06	0	3.6033E-11	3.26393E-10	3.62427E-10	0.0003624
396366.283767877.2	396366.28	3767877	0	0	0	0	0	0	0	8.5193E-06	8.5193E-06	0	3.80898E-11	3.45024E-10	3.83114E-10	0.0003831
396466.283767877.2	396466.28	3767877	0	0	0	0	0	0	0	8.08394E-06	8.08394E-06	0	3.61434E-11	3.27393E-10	3.63536E-10	0.0003635
396566.283767877.2	396566.28	3767877	0	0	0	0	0	0	0	8.00101E-06	8.00101E-06	0	3.57726E-11	3.24034E-10	3.59807E-10	0.0003598
397466.283767877.2	397466.28	3767877	0	0	0	0	0	0	0	9.38054E-06	9.38054E-06	0	4.19405E-11	3.79904E-10	4.21844E-10	0.0004218
397566.283767877.2	397566.28	3767877	0	0	0	0	0	0	0	7.38854E-06	7.38854E-06	0	3.30342E-11	2.9923E-10	3.32264E-10	0.0003323
397666.283767877.2	397666.28	3767877	0	0	0	0	0	0	0	6.22835E-06	6.22835E-06	0	2.7847E-11	2.52243E-10	2.8009E-10	0.0002801
397766.283767877.2	397766.28	3767877	0	0	0	0	0	0	0	5.51313E-06	5.51313E-06	0	2.46493E-11	2.23277E-10	2.47927E-10	0.0002479
397866.283767877.2	397866.28	3767877	0	0	0	0	0	0	0	5.52227E-06	5.52227E-06	0	2.46901E-11	2.23647E-10	2.48338E-10	0.0002483
396166.283767977.2	396166.28	3767977	0	0	0	0	0	0	0	7.31371E-06	7.31371E-06	0	3.26996E-11	2.96199E-10	3.28899E-10	0.0003289
396266.283767977.2	396266.28	3767977	0	0	0	0	0	0	0	8.45174E-06	8.45174E-06	0	3.77878E-11	3.42288E-10	3.80076E-10	0.0003801
396366.283767977.2	396366.28	3767977	0	0	0	0	0	0	0	9.14145E-06	9.14145E-06	0	4.08715E-11	3.70221E-10	4.11093E-10	0.0004111
396466.283767977.2	396466.28	3767977	0	0	0	0	0	0	0	8.78313E-06	8.78313E-06	0	3.92694E-11	3.55709E-10	3.94979E-10	0.000395
397466.283767977.2	397466.28	3767977	0	0	0	0	0	0	0	1.10631E-05	1.10631E-05	0	4.94633E-11	4.48047E-10	4.97511E-10	0.0004975
397566.283767977.2	397566.28	3767977	0	0	0	0	0	0	0	8.93416E-06	8.93416E-06	0	3.99447E-11	3.61826E-10	4.01771E-10	0.0004018
397666.283767977.2	397666.28	3767977	0	0	0	0	0	0	0	7.41573E-06	7.41573E-06	0	3.31558E-11	3.00331E-10	3.33487E-10	0.0003335
397766.283767977.2	397766.28	3767977	0	0	0	0	0	0	0	7.47003E-06	7.47003E-06	0	3.33986E-11	3.0253E-10	3.35929E-10	0.0003359
397866.283767977.2	397866.28	3767977	0	0	0	0	0	0	0	6.83119E-06	6.83119E-06	0	3.05423E-11	2.76658E-10	3.072E-10	0.0003072
396166.283768077.2	396166.28	3768077	0	0	0	0	0	0	0	9.85953E-06	9.85953E-06	0	4.4082E-11	3.99302E-10	4.43384E-10	0.0004434
396266.283768077.2	396266.28	3768077	0	0	0	0	0	0	0	9.34415E-06	9.34415E-06	0	4.17778E-11	3.7843E-10	4.20208E-10	0.0004202
396366.283768077.2	396366.28	3768077	0	0	0	0	0	0	0	1.014E-05	1.014E-05	0	4.53362E-11	4.10663E-10	4.55999E-10	0.000456
396466.283768077.2	396466.28	3768077	0	0	0	0	0	0	0	1.09769E-05	1.09769E-05	0	4.90777E-11	4.44554E-10	4.93632E-10	0.0004936
397466.283768077.2	397466.28	3768077	0	0	0	0	0	0	0	1.91987E-05	1.91987E-05	0	8.58375E-11	7.77531E-10	8.63369E-10	0.0008634
397566.283768077.2	397566.28	3768077	0	0	0	0	0	0	0	1.51719E-05	1.51719E-05	0	6.78339E-11	6.14451E-10	6.82285E-10	0.0006823

Garvey Reservoir Rehab - Unmitigated Junction Structure			Demolition - 2025	Demolition - 2026	Site Preparation - 2025	ite Preparation - 202	Grading - 2025	Grading - 2026	Infrastructure - 2025	nfrastructure - 2026	Paving - 2025	rchitectural Coating - 202	Child Risk			
Unique Identifier	X (UTM)	Y (UTM)	1900	1900	1900	1900	1900	1900	2025	2026	1900	1900	3rd Trimester	0<2	Total	per million
397666.283768077.2	397666.28	3768077	0	0	0	0	0	0	0	1.13827E-05	1.13827E-05	0	5.08921E-11	4.6099E-10	5.11882E-10	0.0005119
397766.283768077.2	397766.28	3768077	0	0	0	0	0	0	0	8.88752E-06	8.88752E-06	0	3.97362E-11	3.59937E-10	3.99673E-10	0.0003997
397866.283768077.2	397866.28	3768077	0	0	0	0	0	0	0	7.70344E-06	7.70344E-06	0	3.44421E-11	3.11983E-10	3.46425E-10	0.0003464
396166.283768177.2	396166.28	3768177	0	0	0	0	0	0	0	1.18911E-05	1.18911E-05	0	5.3165E-11	4.81578E-10	5.34743E-10	0.0005347
396266.283768177.2	396266.28	3768177	0	0	0	0	0	0	0	1.22816E-05	1.22816E-05	0	5.49113E-11	4.97396E-10	5.52307E-10	0.0005523
396366.283768177.2	396366.28	3768177	0	0	0	0	0	0	0	1.337E-05	1.337E-05	0	5.97773E-11	5.41473E-10	6.01251E-10	0.0006013
396466.283768177.2	396466.28	3768177	0	0	0	0	0	0	0	1.31649E-05	1.31649E-05	0	5.88603E-11	5.33166E-10	5.92027E-10	0.000592
397466.283768177.2	397466.28	3768177	0	0	0	0	0	0	0	4.19871E-05	4.19871E-05	0	1.87725E-10	1.70044E-09	1.88817E-09	0.0018882
397566.283768177.2	397566.28	3768177	0	0	0	0	0	0	0	2.20253E-05	2.20253E-05	0	9.84753E-11	8.92006E-10	9.90481E-10	0.0009905
397666.283768177.2	397666.28	3768177	0	0	0	0	0	0	0	1.50304E-05	1.50304E-05	0	6.72011E-11	6.08719E-10	6.7592E-10	0.0006759
397766.283768177.2	397766.28	3768177	0	0	0	0	0	0	0	1.10837E-05	1.10837E-05	0	4.95555E-11	4.48882E-10	4.98438E-10	0.0004984
397866.283768177.2	397866.28	3768177	0	0	0	0	0	0	0	9.09468E-06	9.09468E-06	0	4.06624E-11	3.68327E-10	4.08989E-10	0.000409
396166.283768277.2	396166.28	3768277	0	0	0	0	0	0	0	1.41424E-05	1.41424E-05	0	6.32307E-11	5.72754E-10	6.35985E-10	0.000636
396266.283768277.2	396266.28	3768277	0	0	0	0	0	0	0	1.39172E-05	1.39172E-05	0	6.22238E-11	5.63634E-10	6.25858E-10	0.0006259
396366.283768277.2	396366.28	3768277	0	0	0	0	0	0	0	1.56228E-05	1.56228E-05	0	6.98496E-11	6.32709E-10	7.02559E-10	0.0007026
396466.283768277.2	396466.28	3768277	0	0	0	0	0	0	0	1.61667E-05	1.61667E-05	0	7.22815E-11	6.54739E-10	7.2702E-10	0.000727
397366.283768277.2	397366.28	3768277	0	0	0	0	0	0	0	0.000333703	0.000333703	0	1.49199E-09	1.35147E-08	1.50067E-08	0.0150067
397466.283768277.2	397466.28	3768277	0	0	0	0	0	0	0	6.55061E-05	6.55061E-05	0	2.92878E-10	2.65294E-09	2.94582E-09	0.0029458
397566.283768277.2	397566.28	3768277	0	0	0	0	0	0	0	2.99056E-05	2.99056E-05	0	1.33708E-10	1.21115E-09	1.34486E-09	0.0013449
397666.283768277.2	397666.28	3768277	0	0	0	0	0	0	0	1.87384E-05	1.87384E-05	0	8.37795E-11	7.58889E-10	8.42668E-10	0.0008427
397766.283768277.2	397766.28	3768277	0	0	0	0	0	0	0	1.3423E-05	1.3423E-05	0	6.00144E-11	5.43621E-10	6.03635E-10	0.0006036
397866.283768277.2	397866.28	3768277	0	0	0	0	0	0	0	1.03337E-05	1.03337E-05	0	4.62019E-11	4.18505E-10	4.64707E-10	0.0004647
396166.283768377.2	396166.28	3768377	0	0	0	0	0	0	0	1.6667E-05	1.6667E-05	0	7.45182E-11	6.74998E-10	7.49516E-10	0.0007495
396266.283768377.2	396266.28	3768377	0	0	0	0	0	0	0	1.73546E-05	1.73546E-05	0	7.75926E-11	7.02847E-10	7.80439E-10	0.0007804
396366.283768377.2	396366.28	3768377	0	0	0	0	0	0	0	1.93763E-05	1.93763E-05	0	8.66317E-11	7.84725E-10	8.71357E-10	0.0008714
396466.283768377.2	396466.28	3768377	0	0	0	0	0	0	0	2.09048E-05	2.09048E-05	0	9.34655E-11	8.46626E-10	9.40092E-10	0.0009401
397266.283768377.2	397266.28	3768377	0	0	0	0	0	0	0	0.000523875	0.000523875	0	2.34225E-09	2.12165E-08	2.35587E-08	0.0235587
397366.283768377.2	397366.28	3768377	0	0	0	0	0	0	0	0.000235623	0.000235623	0	1.05347E-09	9.54252E-09	1.0596E-08	0.010596
397466.283768377.2	397466.28	3768377	0	0	0	0	0	0	0	7.603E-05	7.603E-05	0	3.39931E-10	3.07915E-09	3.41908E-09	0.0034191
397566.283768377.2	397566.28	3768377	0	0	0	0	0	0	0	3.65004E-05	3.65004E-05	0	1.63194E-10	1.47824E-09	1.64143E-09	0.0016414
397666.283768377.2	397666.28	3768377	0	0	0	0	0	0	0	2.21244E-05	2.21244E-05	0	9.89184E-11	8.9602E-10	9.94938E-10	0.0009949
397766.283768377.2	397766.28	3768377	0	0	0	0	0	0	0	1.55538E-05	1.55538E-05	0	6.95412E-11	6.29916E-10	6.99457E-10	0.0006995
397866.283768377.2	397866.28	3768377	0	0	0	0	0	0	0	1.11884E-05	1.11884E-05	0	5.00235E-11	4.53122E-10	5.03145E-10	0.0005031
396166.283768477.2	396166.28	3768477	0	0	0	0	0	0	0	2.04481E-05	2.04481E-05	0	9.14237E-11	8.28132E-10	9.19555E-10	0.0009196
396266.283768477.2	396266.28	3768477	0	0	0	0	0	0	0	2.20367E-05	2.20367E-05	0	9.85265E-11	8.9247E-10	9.90996E-10	0.000991
396366.283768477.2	396366.28	3768477	0	0	0	0	0	0	0	2.44257E-05	2.44257E-05	0	1.09208E-10	9.89221E-10	1.09843E-09	0.0010984
396466.283768477.2	396466.28	3768477	0	0	0	0	0	0	0	2.73511E-05	2.73511E-05	0	1.22287E-10	1.1077E-09	1.22998E-09	0.00123
397166.283768477.2	397166.28	3768477	0	0	0	0	0	0	0	9.73672E-05	9.73672E-05	0	4.35329E-10	3.94329E-09	4.37862E-09	0.0043786
397266.283768477.2	397266.28	3768477	0	0	0	0	0	0	0	0.000531762	0.000531762	0	2.37751E-09	2.15359E-08	2.39134E-08	0.0239134
397366.283768477.2	397366.28	3768477	0	0	0	0	0	0	0	0.000215441	0.000215441	0	9.63238E-10	8.72518E-09	9.68841E-09	0.0096884
397466.283768477.2	397466.28	3768477	0	0	0	0	0	0	0	7.00666E-05	7.00666E-05	0	3.13268E-10	2.83764E-09	3.15091E-09	0.0031509
397566.283768477.2	397566.28	3768477	0	0	0	0	0	0	0	4.18824E-05	4.18824E-05	0	1.87257E-10	1.6962E-09	1.88346E-09	0.0018835
397666.283768477.2	397666.28	3768477	0	0	0	0	0	0	0	2.59892E-05	2.59892E-05	0	1.16198E-10	1.05254E-09	1.16874E-09	0.0011687
397766.283768477.2	397766.28	3768477	0	0	0	0	0	0	0	1.64422E-05	1.64422E-05	0	7.35134E-11	6.65897E-10	7.3941E-10	0.0007394
397866.283768477.2	397866.28	3768477	0	0	0	0	0	0	0	1.28178E-05	1.28178E-05	0	5.73085E-11	5.1911E-10	5.76419E-10	0.0005764
396166.283768577.2	396166.28	3768577	0	0	0	0	0	0	0	2.60193E-05	2.60193E-05	0	1.16332E-10	1.05376E-09	1.17009E-09	0.0011701
396266.283768577.2	396266.28	3768577	0	0	0	0	0	0	0	2.93301E-05	2.93301E-05	0	1.31135E-10	1.18784E-09	1.31898E-09	0.001319
396366.283768577.2	396366.28	3768577	0	0	0	0	0	0	0	3.16434E-05	3.16434E-05	0	1.41478E-10	1.28153E-09	1.42301E-09	0.001423
396466.283768577.2	396466.28	3768577	0	0	0	0	0	0	0	3.79976E-05	3.79976E-05	0	1.69888E-10	1.53887E-09	1.70876E-09	0.0017088
396566.283768577.2	396566.28	3768577	0	0	0	0	0	0	0	3.72132E-05	3.72132E-05	0	1.6638E-10	1.5071E-09	1.67348E-09	0.0016735
396866.283768577.2	396866.28	3768577	0	0	0	0	0	0	0	4.76217E-05	4.76217E-05	0	2.12917E-10	1.92864E-09	2.14156E-09	0.0021416
396966.283768577.2	396966.28	3768577	0	0	0	0	0	0	0	5.52952E-05	5.52952E-05	0	2.47225E-10	2.23941E-09	2.48663E-09	0.0024866
397066.283768577.2	397066.28	3768577	0	0	0	0	0	0	0	6.83391E-05	6.83391E-05	0	3.05545E-10	2.76768E-09	3.07322E-09	0.0030732
397166.283768577.2	397166.28	3768577	0	0	0	0	0	0	0	0.000117007	0.000117007	0	5.23138E-10	4.73868E-09	5.26181E-09	0.0052618
397266.283768577.2	397266.28	3768577	0	0	0	0	0	0	0	0.000515848	0.000515848	0	2.30636E-09	2.08914E-08	2.31978E-08	0.0231978
397366.283768577.2	397366.28	3768577	0	0	0	0	0	0	0	0.000216068	0.000216068	0	9.6604E-10	8.75055E-09	9.71659E-09	0.0097166
397466.283768577.2	397466.28	3768577	0	0	0	0	0	0	0	6.92328E-05	6.92328E-05	0	3.0954E-10	2.80387E-09	3.11341E-09	0.0031134
397566.283768577.2	397566.28	3768577	0	0	0	0	0	0	0	4.14429E-05	4.14429E-05	0	1.85292E-10	1.6784E-09	1.86369E-09	0.0018637
397666.283768577.2	397666.28	3768577	0	0	0	0	0	0	0	2.75516E-05	2.75516E-05	0	1.23184E-10	1.11582E-09	1.239E-09	0.001239
397766.283768577.2	397766.28	3768577	0	0	0	0	0	0	0	1.96067E-05	1.96067E-05	0	8.76616E-11	7.94054E-10	8.81715E-10	0.0008817
397866.283768577.2	397866.28	3768577	0	0	0	0	0	0	0	1.43156E-05	1.43156E-05	0	6.40052E-11	5.7977E-10	6.43776E-10	0.0006438
396166.283768677.2	396166.28	3768677	0	0	0	0	0	0	0	4.57094E-05	4.57094E-05	0	2.04367E-10	1.85119E-09	2.05556E-09	0.0020556
396266.283768677.2	396266.28	3768677	0	0	0	0	0	0	0	5.21859E-05	5.21859E-05	0	2.33324E-10	2.11349E-09	2.34681E-09	0.0023468
396366.283768677.2	396366.28	3768677	0	0	0	0	0	0	0	5.06731E-05	5.06731E-05	0	2.2656E-10	2.05222E-09	2.27878E-09	0.0022788
396466.283768677.2	396466.28	3768677	0	0	0	0	0	0	0	6.22106E-05	6.22106E-05	0	2.78144E-10	2.51948E-09	2.79762E-09	0.0027976
396566.283768677.2	396566.28	3768677	0	0	0	0	0	0	0	6.28893E-05	6.28893E-05	0	2.81179E-10	2.54697E-09	2.82814E-09	0.0028281
396666.283768677.2	396666.28	3768677	0	0	0	0	0	0	0	6.42071E-05	6.42071E-05	0	2.8707E-10	2.60033E-09	2.8874E-09	0.0028874
396766.283768677.2	396766.28	3768677	0	0	0	0	0	0	0	6.66299E-05	6.66299E-05	0	2.97903E-10	2.69846E-09	2.99636E-09	0.0029964
396866.283768677.2	396866.28	3768677	0	0	0	0	0	0	0	7.3998E-05	7.3998E-05	0	3.30846E-10	2.99686E-09	3.3277E-09	0.0033277
396966.283768677.2	396966.28	3768677	0	0	0	0	0	0	0	8.09988E-05	8.09988E-05	0	3.62146E-10	3.28038E-09	3.64253E-09	0.0036425
397066.283768677.2	397066.28	3768677	0	0	0	0	0	0	0	9.39578E-05	9.39578E-05	0	4.20086E-10	3.80521E-09	4.2253E-09	0.0042253

Garvey Reservoir Rehab - Unmitigated Junction Structure			Demolition - 2025	Demolition - 2026	Site Preparation - 2025	ite Preparation - 202	Grading - 2025	Grading - 2026	Infrastructure - 2025	nfrastructure - 2026	Paving - 2025	rchitectural Coating - 202	Child Risk			
Unique Identifier	X (UTM)	Y (UTM)	1900	1900	1900	1900	1900	1900	2025	2026	1900	1900	3rd Trimester	0<2	Total	per million
397166.283768677.2	397166.28	3768677	0	0	0	0	0	0	0	0.000147469	0.000147469	0	6.59333E-10	5.97235E-09	6.63169E-09	0.0066317
397366.283768677.2	397366.28	3768677	0	0	0	0	0	0	0	0.000196102	0.000196102	0	8.76773E-10	7.94196E-09	8.81874E-09	0.0088187
397466.283768677.2	397466.28	3768677	0	0	0	0	0	0	0	7.90103E-05	7.90103E-05	0	3.53256E-10	3.19985E-09	3.55311E-09	0.0035531
397566.283768677.2	397566.28	3768677	0	0	0	0	0	0	0	4.30868E-05	4.30868E-05	0	1.92641E-10	1.74498E-09	1.93762E-09	0.0019376
397666.283768677.2	397666.28	3768677	0	0	0	0	0	0	0	2.82298E-05	2.82298E-05	0	1.26215E-10	1.14328E-09	1.2695E-09	0.0012695
397766.283768677.2	397766.28	3768677	0	0	0	0	0	0	0	2.08218E-05	2.08218E-05	0	9.30944E-11	8.43265E-10	9.3636E-10	0.0009364
397866.283768677.2	397866.28	3768677	0	0	0	0	0	0	0	1.52892E-05	1.52892E-05	0	6.83583E-11	6.19201E-10	6.87559E-10	0.0006876
396166.283768777.2	396166.28	3768777	0	0	0	0	0	0	0	0.000132727	0.000132727	0	5.93424E-10	5.37533E-09	5.96876E-09	0.0059688
396266.283768777.2	396266.28	3768777	0	0	0	0	0	0	0	0.000164923	0.000164923	0	7.37371E-10	6.67923E-09	7.4166E-09	0.0074166
396366.283768777.2	396366.28	3768777	0	0	0	0	0	0	0	0.000120907	0.000120907	0	5.40576E-10	4.89663E-09	5.4372E-09	0.0054372
396466.283768777.2	396466.28	3768777	0	0	0	0	0	0	0	0.000157991	0.000157991	0	7.06381E-10	6.39852E-09	7.1049E-09	0.0071049
396566.283768777.2	396566.28	3768777	0	0	0	0	0	0	0	0.000169188	0.000169188	0	7.5644E-10	6.85196E-09	7.6084E-09	0.0076084
396666.283768777.2	396666.28	3768777	0	0	0	0	0	0	0	0.000169128	0.000169128	0	7.56175E-10	6.84956E-09	7.60573E-09	0.0076057
396766.283768777.2	396766.28	3768777	0	0	0	0	0	0	0	0.000174954	0.000174954	0	7.82223E-10	7.08551E-09	7.86773E-09	0.0078677
396866.283768777.2	396866.28	3768777	0	0	0	0	0	0	0	0.000181896	0.000181896	0	8.13257E-10	7.36662E-09	8.17988E-09	0.0081799
396966.283768777.2	396966.28	3768777	0	0	0	0	0	0	0	0.000186382	0.000186382	0	8.33313E-10	7.54829E-09	8.38161E-09	0.0083816
397066.283768777.2	397066.28	3768777	0	0	0	0	0	0	0	0.000200791	0.000200791	0	8.9774E-10	8.13188E-09	9.02962E-09	0.0090296
397166.283768777.2	397166.28	3768777	0	0	0	0	0	0	0	0.000241802	0.000241802	0	1.0811E-09	9.79279E-09	1.08739E-08	0.0108739
397266.283768777.2	397266.28	3768777	0	0	0	0	0	0	0	0.000771231	0.000771231	0	3.44818E-09	3.12342E-08	3.46824E-08	0.0346824
397366.283768777.2	397366.28	3768777	0	0	0	0	0	0	0	0.000267969	0.000267969	0	1.19809E-09	1.08525E-08	1.20506E-08	0.0120506
397466.283768777.2	397466.28	3768777	0	0	0	0	0	0	0	9.42505E-05	9.42505E-05	0	4.21395E-10	3.81707E-09	4.23846E-09	0.0042385
397566.283768777.2	397566.28	3768777	0	0	0	0	0	0	0	5.0549E-05	5.0549E-05	0	2.26005E-10	2.04719E-09	2.2732E-09	0.0022732
397666.283768777.2	397666.28	3768777	0	0	0	0	0	0	0	3.17912E-05	3.17912E-05	0	1.42139E-10	1.28752E-09	1.42966E-09	0.0014297
397766.283768777.2	397766.28	3768777	0	0	0	0	0	0	0	2.17646E-05	2.17646E-05	0	9.73099E-11	8.8145E-10	9.78759E-10	0.0009788
397866.283768777.2	397866.28	3768777	0	0	0	0	0	0	0	1.58433E-05	1.58433E-05	0	7.08354E-11	6.41639E-10	7.12475E-10	0.0007125
396166.283768877.2	396166.28	3768877	0	0	0	0	0	0	0	0.000534373	0.000534373	0	2.38918E-09	2.16416E-08	2.40308E-08	0.0240308
396266.283768877.2	396266.28	3768877	0	0	0	0	0	0	0	0.000688214	0.000688214	0	3.07701E-09	2.78721E-08	3.09491E-08	0.0309491
396366.283768877.2	396366.28	3768877	0	0	0	0	0	0	0	0.000673899	0.000673899	0	3.01301E-09	2.72923E-08	3.03053E-08	0.0303053
396466.283768877.2	396466.28	3768877	0	0	0	0	0	0	0	0.000742351	0.000742351	0	3.31906E-09	3.00646E-08	3.33837E-08	0.0333837
396566.283768877.2	396566.28	3768877	0	0	0	0	0	0	0	0.00070014	0.00070014	0	3.13033E-09	2.83551E-08	3.14854E-08	0.0314854
396666.283768877.2	396666.28	3768877	0	0	0	0	0	0	0	0.000760661	0.000760661	0	3.40092E-09	3.08061E-08	3.42071E-08	0.0342071
396766.283768877.2	396766.28	3768877	0	0	0	0	0	0	0	0.000736205	0.000736205	0	3.29158E-09	2.98157E-08	3.31072E-08	0.0331072
396866.283768877.2	396866.28	3768877	0	0	0	0	0	0	0	0.000715148	0.000715148	0	3.19743E-09	2.89629E-08	3.21603E-08	0.0321603
396966.283768877.2	396966.28	3768877	0	0	0	0	0	0	0	0.000687674	0.000687674	0	3.0746E-09	2.78502E-08	3.09248E-08	0.0309248
397066.283768877.2	397066.28	3768877	0	0	0	0	0	0	0	0.000695221	0.000695221	0	3.10834E-09	2.81559E-08	3.12642E-08	0.0312642
397166.283768877.2	397166.28	3768877	0	0	0	0	0	0	0	0.000714546	0.000714546	0	3.19474E-09	2.89385E-08	3.21333E-08	0.0321333
397266.283768877.2	397266.28	3768877	0	0	0	0	0	0	0	0.000750688	0.000750688	0	3.35633E-09	3.04022E-08	3.37586E-08	0.0337586
397366.283768877.2	397366.28	3768877	0	0	0	0	0	0	0	0.000369107	0.000369107	0	1.65028E-09	1.49485E-08	1.65988E-08	0.0165988
397466.283768877.2	397466.28	3768877	0	0	0	0	0	0	0	9.87798E-05	9.87798E-05	0	4.41645E-10	4.0005E-09	4.44214E-09	0.0044421
397566.283768877.2	397566.28	3768877	0	0	0	0	0	0	0	5.05103E-05	5.05103E-05	0	2.25832E-10	2.04562E-09	2.27146E-09	0.0022715
397666.283768877.2	397666.28	3768877	0	0	0	0	0	0	0	3.1331E-05	3.1331E-05	0	1.40081E-10	1.26888E-09	1.40896E-09	0.001409
397766.283768877.2	397766.28	3768877	0	0	0	0	0	0	0	2.16575E-05	2.16575E-05	0	9.68307E-11	8.77109E-10	9.73939E-10	0.0009739
397866.283768877.2	397866.28	3768877	0	0	0	0	0	0	0	1.60291E-05	1.60291E-05	0	7.16661E-11	6.49164E-10	7.2083E-10	0.0007208
3964253767739	396425	3767739	0	0	0	0	0	0	0	7.20397E-06	7.20397E-06	0	3.2209E-11	2.91755E-10	3.23964E-10	0.000324
3964753767739	396475	3767739	0	0	0	0	0	0	0	7.37609E-06	7.37609E-06	0	3.29785E-11	2.98725E-10	3.31704E-10	0.0003317
3965253767739	396525	3767739	0	0	0	0	0	0	0	6.87507E-06	6.87507E-06	0	3.07385E-11	2.78435E-10	3.09173E-10	0.0003092
3965753767739	396575	3767739	0	0	0	0	0	0	0	7.07382E-06	7.07382E-06	0	3.16271E-11	2.86484E-10	3.18111E-10	0.0003181
3966253767739	396625	3767739	0	0	0	0	0	0	0	6.79381E-06	6.79381E-06	0	3.03752E-11	2.75143E-10	3.05519E-10	0.0003055
3966753767739	396675	3767739	0	0	0	0	0	0	0	6.95207E-06	6.95207E-06	0	3.10828E-11	2.81553E-10	3.12636E-10	0.0003126
3967253767739	396725	3767739	0	0	0	0	0	0	0	7.26558E-06	7.26558E-06	0	3.24845E-11	2.9425E-10	3.26734E-10	0.0003267
3967753767739	396775	3767739	0	0	0	0	0	0	0	7.32665E-06	7.32665E-06	0	3.27575E-11	2.96723E-10	3.29481E-10	0.0003295
3968253767739	396825	3767739	0	0	0	0	0	0	0	7.73952E-06	7.73952E-06	0	3.46035E-11	3.13444E-10	3.48048E-10	0.000348
3968753767739	396875	3767739	0	0	0	0	0	0	0	7.96493E-06	7.96493E-06	0	3.56113E-11	3.22573E-10	3.58184E-10	0.0003582
3969253767739	396925	3767739	0	0	0	0	0	0	0	7.94294E-06	7.94294E-06	0	3.55129E-11	3.21682E-10	3.57195E-10	0.0003572
3969753767739	396975	3767739	0	0	0	0	0	0	0	7.89019E-06	7.89019E-06	0	3.52771E-11	3.19546E-10	3.54823E-10	0.0003548
3970253767739	397025	3767739	0	0	0	0	0	0	0	7.85697E-06	7.85697E-06	0	3.51286E-11	3.18201E-10	3.53329E-10	0.0003533
3970753767739	397075	3767739	0	0	0	0	0	0	0	7.89709E-06	7.89709E-06	0	3.53079E-11	3.19825E-10	3.55133E-10	0.0003551
3971253767739	397125	3767739	0	0	0	0	0	0	0	7.90673E-06	7.90673E-06	0	3.5351E-11	3.20216E-10	3.55567E-10	0.0003556
3971753767739	397175	3767739	0	0	0	0	0	0	0	7.80276E-06	7.80276E-06	0	3.48862E-11	3.16005E-10	3.50891E-10	0.0003509
3972253767739	397225	3767739	0	0	0	0	0	0	0	7.63719E-06	7.63719E-06	0	3.41459E-11	3.093E-10	3.43446E-10	0.0003434
3972753767739	397275	3767739	0	0	0	0	0	0	0	7.20278E-06	7.20278E-06	0	3.22037E-11	2.91706E-10	3.2391E-10	0.0003239
3973253767739	397325	3767739	0	0	0	0	0	0	0	7.20566E-06	7.20566E-06	0	3.22166E-11	2.91823E-10	3.2404E-10	0.000324
3973753767739	397375	3767739	0	0	0	0	0	0	0	7.18178E-06	7.18178E-06	0	3.21098E-11	2.90856E-10	3.22966E-10	0.000323
3974253767739	397425	3767739	0	0	0	0	0	0	0	6.98887E-06	6.98887E-06	0	3.12473E-11	2.83043E-10	3.1429E-10	0.0003143
3974753767739	397475	3767739	0	0	0	0	0	0	0	6.17468E-06	6.17468E-06	0	2.7607E-11	2.50069E-10	2.77676E-10	0.0002777
3975253767739	397525	3767739	0	0	0	0	0	0	0	5.96908E-06	5.96908E-06	0	2.66878E-11	2.41743E-10	2.6843E-10	0.0002684
3964253767789	396425	3767789	0	0	0	0	0	0	0	7.6955E-06	7.6955E-06	0	3.44066E-11	3.11661E-10	3.46068E-10	0.0003461
3964753767789	396475	3767789	0	0	0	0	0	0	0	7.41389E-06	7.41389E-06	0	3.31476E-11	3.00256E-10	3.33404E-10	0.0003334
3965253767789	396525	3767789	0	0	0	0	0	0	0	7.02164E-06	7.02164E-06	0	3.13938E-11	2.84371E-10	3.15764E-10	0.0003158
3965753767789	396575	3767789	0	0	0	0	0	0	0	7.10663E-06	7.10663E-06	0	3.17738E-11	2.87812E-10	3.19586E-10	0.0003196
3966253767789	396625	3767789	0	0	0	0	0	0	0	7.29373E-06	7.29373E-06	0	3.26103E-11	2.9539E-10	3.28E-10	0.000328

Garvey Reservoir Rehab - Unmitigated Junction Structure			Demolition - 2025	Demolition - 2026	Site Preparation - 2025	te Preparation - 202	Grading - 2025	Grading - 2026	Infrastructure - 2025	nfrastructure - 2026	Paving - 2025	rchitectural Coating - 202	Child Risk			
Unique Identifier	X (UTM)	Y (UTM)	1900	1900	1900	1900	1900	1900	2025	2026	1900	1900	3rd Trimester	0<2	Total	per million
3966753767789	396675	3767789	0	0	0	0	0	0	0	7.51273E-06	7.51273E-06	0	3.35895E-11	3.04259E-10	3.37849E-10	0.0003378
3967253767789	396725	3767789	0	0	0	0	0	0	0	8.10376E-06	8.10376E-06	0	3.6232E-11	3.28196E-10	3.64428E-10	0.0003644
3967753767789	396775	3767789	0	0	0	0	0	0	0	8.30081E-06	8.30081E-06	0	3.7113E-11	3.36176E-10	3.73289E-10	0.0003733
3968253767789	396825	3767789	0	0	0	0	0	0	0	8.67271E-06	8.67271E-06	0	3.87758E-11	3.51238E-10	3.90013E-10	0.00039
3968753767789	396875	3767789	0	0	0	0	0	0	0	8.79661E-06	8.79661E-06	0	3.93297E-11	3.56255E-10	3.95585E-10	0.0003956
3969253767789	396925	3767789	0	0	0	0	0	0	0	8.79264E-06	8.79264E-06	0	3.9312E-11	3.56094E-10	3.95406E-10	0.0003954
3969753767789	396975	3767789	0	0	0	0	0	0	0	8.68443E-06	8.68443E-06	0	3.88281E-11	3.51712E-10	3.9054E-10	0.0003905
3970253767789	397025	3767789	0	0	0	0	0	0	0	8.63588E-06	8.63588E-06	0	3.86111E-11	3.49746E-10	3.88357E-10	0.0003884
3970753767789	397075	3767789	0	0	0	0	0	0	0	8.71677E-06	8.71677E-06	0	3.89727E-11	3.53022E-10	3.91994E-10	0.000392
3971253767789	397125	3767789	0	0	0	0	0	0	0	8.77979E-06	8.77979E-06	0	3.92545E-11	3.55574E-10	3.94829E-10	0.0003948
3971753767789	397175	3767789	0	0	0	0	0	0	0	8.74035E-06	8.74035E-06	0	3.90782E-11	3.53977E-10	3.93055E-10	0.0003931
3972253767789	397225	3767789	0	0	0	0	0	0	0	8.63093E-06	8.63093E-06	0	3.8589E-11	3.49545E-10	3.88134E-10	0.0003881
3972753767789	397275	3767789	0	0	0	0	0	0	0	8.15315E-06	8.15315E-06	0	3.64528E-11	3.30196E-10	3.66648E-10	0.0003666
3973253767789	397325	3767789	0	0	0	0	0	0	0	7.95506E-06	7.95506E-06	0	3.55671E-11	3.22173E-10	3.5774E-10	0.0003577
3973753767789	397375	3767789	0	0	0	0	0	0	0	7.98046E-06	7.98046E-06	0	3.56807E-11	3.23202E-10	3.58883E-10	0.0003589
3974253767789	397425	3767789	0	0	0	0	0	0	0	7.81708E-06	7.81708E-06	0	3.49502E-11	3.16585E-10	3.51535E-10	0.0003515
3974753767789	397475	3767789	0	0	0	0	0	0	0	6.81191E-06	6.81191E-06	0	3.04561E-11	2.75877E-10	3.06333E-10	0.0003063
3975253767789	397525	3767789	0	0	0	0	0	0	0	6.60683E-06	6.60683E-06	0	2.95392E-11	2.67571E-10	2.9711E-10	0.0002971
3964253767839	396425	3767839	0	0	0	0	0	0	0	8.21604E-06	8.21604E-06	0	3.6734E-11	3.32743E-10	3.69477E-10	0.0003695
3964753767839	396475	3767839	0	0	0	0	0	0	0	8.16376E-06	8.16376E-06	0	3.65003E-11	3.30626E-10	3.67126E-10	0.0003671
3965253767839	396525	3767839	0	0	0	0	0	0	0	7.40369E-06	7.40369E-06	0	3.3102E-11	2.99843E-10	3.32945E-10	0.0003329
3965753767839	396575	3767839	0	0	0	0	0	0	0	7.61628E-06	7.61628E-06	0	3.40525E-11	3.08453E-10	3.42505E-10	0.0003425
3966253767839	396625	3767839	0	0	0	0	0	0	0	7.84574E-06	7.84574E-06	0	3.50784E-11	3.17746E-10	3.52824E-10	0.0003528
3966753767839	396675	3767839	0	0	0	0	0	0	0	8.75109E-06	8.75109E-06	0	3.91262E-11	3.54412E-10	3.93538E-10	0.0003935
3967253767839	396725	3767839	0	0	0	0	0	0	0	9.16746E-06	9.16746E-06	0	4.09878E-11	3.71274E-10	4.12262E-10	0.0004123
3967753767839	396775	3767839	0	0	0	0	0	0	0	9.40771E-06	9.40771E-06	0	4.20619E-11	3.81004E-10	4.23066E-10	0.0004231
3968253767839	396825	3767839	0	0	0	0	0	0	0	9.64221E-06	9.64221E-06	0	4.31104E-11	3.90501E-10	4.33612E-10	0.0004336
3968753767839	396875	3767839	0	0	0	0	0	0	0	9.75542E-06	9.75542E-06	0	4.36166E-11	3.95086E-10	4.38703E-10	0.0004387
3969253767839	396925	3767839	0	0	0	0	0	0	0	9.78484E-06	9.78484E-06	0	4.37481E-11	3.96278E-10	4.40026E-10	0.00044
3969753767839	396975	3767839	0	0	0	0	0	0	0	9.68405E-06	9.68405E-06	0	4.32974E-11	3.92196E-10	4.35493E-10	0.0004355
3970253767839	397025	3767839	0	0	0	0	0	0	0	9.60676E-06	9.60676E-06	0	4.29519E-11	3.89066E-10	4.32017E-10	0.000432
3970753767839	397075	3767839	0	0	0	0	0	0	0	9.81404E-06	9.81404E-06	0	4.38787E-11	3.9746E-10	4.41339E-10	0.0004413
3971253767839	397125	3767839	0	0	0	0	0	0	0	9.99446E-06	9.99446E-06	0	4.46853E-11	4.04767E-10	4.49452E-10	0.0004495
3971753767839	397175	3767839	0	0	0	0	0	0	0	9.86235E-06	9.86235E-06	0	4.40946E-11	3.99417E-10	4.43511E-10	0.0004435
3972253767839	397225	3767839	0	0	0	0	0	0	0	9.48179E-06	9.48179E-06	0	4.23932E-11	3.84005E-10	4.26398E-10	0.0004264
3972753767839	397275	3767839	0	0	0	0	0	0	0	8.98205E-06	8.98205E-06	0	4.01588E-11	3.63765E-10	4.03924E-10	0.0004039
3973253767839	397325	3767839	0	0	0	0	0	0	0	8.56318E-06	8.56318E-06	0	3.8286E-11	3.46802E-10	3.85088E-10	0.0003851
3973753767839	397375	3767839	0	0	0	0	0	0	0	8.90805E-06	8.90805E-06	0	3.9828E-11	3.60769E-10	4.00597E-10	0.0004006
3974753767839	397475	3767839	0	0	0	0	0	0	0	8.39684E-06	8.39684E-06	0	3.75423E-11	3.40065E-10	3.77607E-10	0.0003776
3975253767839	397525	3767839	0	0	0	0	0	0	0	7.17645E-06	7.17645E-06	0	3.2086E-11	2.9064E-10	3.22726E-10	0.0003227
3964253767889	396425	3767889	0	0	0	0	0	0	0	8.68786E-06	8.68786E-06	0	3.88435E-11	3.51851E-10	3.90694E-10	0.0003907
3964753767889	396475	3767889	0	0	0	0	0	0	0	7.72394E-06	7.72394E-06	0	3.45338E-11	3.12813E-10	3.47347E-10	0.0003473
3965253767889	396525	3767889	0	0	0	0	0	0	0	7.92693E-06	7.92693E-06	0	3.54414E-11	3.21034E-10	3.56476E-10	0.0003565
3965753767889	396575	3767889	0	0	0	0	0	0	0	8.28594E-06	8.28594E-06	0	3.70465E-11	3.35573E-10	3.7262E-10	0.0003726
3974753767889	397475	3767889	0	0	0	0	0	0	0	9.11005E-06	9.11005E-06	0	4.07311E-11	3.68949E-10	4.09681E-10	0.0004097
3975253767889	397525	3767889	0	0	0	0	0	0	0	7.91657E-06	7.91657E-06	0	3.5395E-11	3.20614E-10	3.56009E-10	0.000356
3964253767939	396425	3767939	0	0	0	0	0	0	0	9.223E-06	9.223E-06	0	4.12361E-11	3.73524E-10	4.1476E-10	0.0004148
3964753767939	396475	3767939	0	0	0	0	0	0	0	8.29009E-06	8.29009E-06	0	3.70651E-11	3.35742E-10	3.72807E-10	0.0003728
3965253767939	396525	3767939	0	0	0	0	0	0	0	8.58704E-06	8.58704E-06	0	3.83927E-11	3.47768E-10	3.86161E-10	0.0003862
3974753767939	397475	3767939	0	0	0	0	0	0	0	9.67969E-06	9.67969E-06	0	4.3278E-11	3.92019E-10	4.35297E-10	0.0004353
3975253767939	397525	3767939	0	0	0	0	0	0	0	8.84858E-06	8.84858E-06	0	3.9562E-11	3.5836E-10	3.97922E-10	0.0003979
3964253767989	396425	3767989	0	0	0	0	0	0	0	9.04835E-06	9.04835E-06	0	4.04553E-11	3.66451E-10	4.06906E-10	0.0004069
3964753767989	396475	3767989	0	0	0	0	0	0	0	9.00918E-06	9.00918E-06	0	4.02801E-11	3.64864E-10	4.05144E-10	0.0004051
3974753767989	397475	3767989	0	0	0	0	0	0	0	1.11242E-05	1.11242E-05	0	4.97364E-11	4.50521E-10	5.00257E-10	0.0005003
3975253767989	397525	3767989	0	0	0	0	0	0	0	1.00822E-05	1.00822E-05	0	4.50776E-11	4.08321E-10	4.53398E-10	0.0004534
3964253768039	396425	3768039	0	0	0	0	0	0	0	9.75461E-06	9.75461E-06	0	4.36129E-11	3.95053E-10	4.38666E-10	0.0004387
3964753768039	396475	3768039	0	0	0	0	0	0	0	1.00792E-05	1.00792E-05	0	4.50642E-11	4.08199E-10	4.53264E-10	0.0004533
3974753768039	397475	3768039	0	0	0	0	0	0	0	1.48514E-05	1.48514E-05	0	6.64009E-11	6.01471E-10	6.67872E-10	0.0006679
3975253768039	397525	3768039	0	0	0	0	0	0	0	1.38974E-05	1.38974E-05	0	6.21354E-11	5.62833E-10	6.24968E-10	0.000625
3964253768089	396425	3768089	0	0	0	0	0	0	0	1.07571E-05	1.07571E-05	0	4.80949E-11	4.35652E-10	4.83747E-10	0.0004837
3964753768089	396475	3768089	0	0	0	0	0	0	0	1.13061E-05	1.13061E-05	0	5.05498E-11	4.57889E-10	5.08439E-10	0.0005084
3974753768089	397475	3768089	0	0	0	0	0	0	0	1.99899E-05	1.99899E-05	0	8.93751E-11	8.09575E-10	8.9895E-10	0.0008989
3975253768089	397525	3768089	0	0	0	0	0	0	0	1.841E-05	1.841E-05	0	8.23114E-11	7.45591E-10	8.27902E-10	0.0008279
3964253768139	396425	3768139	0	0	0	0	0	0	0	1.33947E-05	1.33947E-05	0	5.98878E-11	5.42474E-10	6.02362E-10	0.0006024
3964753768139	396475	3768139	0	0	0	0	0	0	0	1.23382E-05	1.23382E-05	0	5.51642E-11	4.99687E-10	5.54851E-10	0.0005549
3974253768139	397425	3768139	0	0	0	0	0	0	0	4.24084E-05	4.24084E-05	0	1.89608E-10	1.71751E-09	1.90711E-09	0.0019071
3974753768139	397475	3768139	0	0	0	0	0	0	0	3.07235E-05	3.07235E-05	0	1.37365E-10	1.24428E-09	1.38164E-09	0.0013816
3975253768139	397525	3768139	0	0	0	0	0	0	0	2.31816E-05	2.31816E-05	0	1.03645E-10	9.38834E-10	1.04248E-09	0.0010425
3964253768189	396425	3768189	0	0	0	0	0	0	0	1.44308E-05	1.44308E-05	0	6.45204E-11	5.84437E-10	6.48957E-10	0.000649
3964753768189	396475	3768189	0	0	0	0	0	0	0	1.35066E-05	1.35066E-05	0	6.0388E-11	5.47005E-10	6.07393E-10	0.0006074
3973753768189	397375	3768189	0	0	0	0	0	0	0	0.000251374	0.000251374	0	1.12389E-09	1.01804E-08	1.13043E-08	0.0113043

Garvey Reservoir Rehab - Unmitigated Junction Structure			Demolition - 2025	Demolition - 2026	Site Preparation - 2025	ite Preparation - 202	Grading - 2025	Grading - 2026	Infrastructure - 2025	nfrastructure - 2026	Paving - 2025	rchitectural Coating - 202	Child Risk			
Unique Identifier	X (UTM)	Y (UTM)	1900	1900	1900	1900	1900	1900	2025	2026	1900	1900	3rd Trimester	0<2	Total	per million
3974253768189	397425	3768189	0	0	0	0	0	0	0	7.26092E-05	7.26092E-05	0	3.24636E-10	2.94061E-09	3.26525E-09	0.0032652
3974753768189	397475	3768189	0	0	0	0	0	0	0	4.16037E-05	4.16037E-05	0	1.86011E-10	1.68492E-09	1.87093E-09	0.0018709
3975253768189	397525	3768189	0	0	0	0	0	0	0	2.86451E-05	2.86451E-05	0	1.28073E-10	1.1601E-09	1.28818E-09	0.0012882
3964253768239	396425	3768239	0	0	0	0	0	0	0	1.56187E-05	1.56187E-05	0	6.98314E-11	6.32545E-10	7.02376E-10	0.0007024
3964753768239	396475	3768239	0	0	0	0	0	0	0	1.49348E-05	1.49348E-05	0	6.67738E-11	6.04848E-10	6.71622E-10	0.0006716
3973753768239	397375	3768239	0	0	0	0	0	0	0	0.000366194	0.000366194	0	1.63726E-09	1.48306E-08	1.64678E-08	0.0164678
3974253768239	397425	3768239	0	0	0	0	0	0	0	9.31217E-05	9.31217E-05	0	4.16348E-10	3.77135E-09	4.1877E-09	0.0041877
3974753768239	397475	3768239	0	0	0	0	0	0	0	5.02084E-05	5.02084E-05	0	2.24482E-10	2.0334E-09	2.25788E-09	0.0022579
3975253768239	397525	3768239	0	0	0	0	0	0	0	3.40586E-05	3.40586E-05	0	1.52276E-10	1.37934E-09	1.53162E-09	0.0015316
3964253768289	396425	3768289	0	0	0	0	0	0	0	1.67187E-05	1.67187E-05	0	7.47495E-11	6.77094E-10	7.51844E-10	0.0007518
3964753768289	396475	3768289	0	0	0	0	0	0	0	1.66394E-05	1.66394E-05	0	7.4395E-11	6.73883E-10	7.48278E-10	0.0007483
3973253768289	397325	3768289	0	0	0	0	0	0	0	0.000970128	0.000970128	0	4.33745E-09	3.92893E-08	4.36268E-08	0.0436268
3973753768289	397375	3768289	0	0	0	0	0	0	0	0.000256808	0.000256808	0	1.14819E-09	1.04005E-08	1.15487E-08	0.0115487
3974253768289	397425	3768289	0	0	0	0	0	0	0	0.000113184	0.000113184	0	5.06046E-10	4.58385E-09	5.08989E-09	0.0050899
3974753768289	397475	3768289	0	0	0	0	0	0	0	6.23968E-05	6.23968E-05	0	2.78976E-10	2.52702E-09	2.80599E-09	0.002806
3975253768289	397525	3768289	0	0	0	0	0	0	0	4.04861E-05	4.04861E-05	0	1.81014E-10	1.63965E-09	1.82067E-09	0.0018207
3964253768339	396425	3768339	0	0	0	0	0	0	0	1.89441E-05	1.89441E-05	0	8.46993E-11	7.67221E-10	8.5192E-10	0.0008519
3964753768339	396475	3768339	0	0	0	0	0	0	0	1.88028E-05	1.88028E-05	0	8.40674E-11	7.61497E-10	8.45564E-10	0.0008456
3965253768339	396525	3768339	0	0	0	0	0	0	0	2.00438E-05	2.00438E-05	0	8.96161E-11	8.11758E-10	9.01374E-10	0.0009014
3972753768339	397275	3768339	0	0	0	0	0	0	0	0.000788164	0.000788164	0	3.52389E-09	3.192E-08	3.54439E-08	0.0354439
3973253768339	397325	3768339	0	0	0	0	0	0	0	0.000581036	0.000581036	0	2.59782E-09	2.35315E-08	2.61293E-08	0.0261293
3973753768339	397375	3768339	0	0	0	0	0	0	0	0.00021402	0.00021402	0	9.56887E-10	8.66765E-09	9.62453E-09	0.0096245
3974253768339	397425	3768339	0	0	0	0	0	0	0	0.000112533	0.000112533	0	5.03137E-10	4.5575E-09	5.06064E-09	0.0050606
3974753768339	397475	3768339	0	0	0	0	0	0	0	6.76729E-05	6.76729E-05	0	3.02566E-10	2.74069E-09	3.04326E-09	0.0030433
3975253768339	397525	3768339	0	0	0	0	0	0	0	4.496E-05	4.496E-05	0	2.01017E-10	1.82084E-09	2.02186E-09	0.0020219
3964253768389	396425	3768389	0	0	0	0	0	0	0	2.10518E-05	2.10518E-05	0	9.41227E-11	8.52579E-10	9.46702E-10	0.0009467
3964753768389	396475	3768389	0	0	0	0	0	0	0	2.14284E-05	2.14284E-05	0	9.58067E-11	8.67834E-10	9.6364E-10	0.0009636
3965253768389	396525	3768389	0	0	0	0	0	0	0	2.24599E-05	2.24599E-05	0	1.00418E-10	9.09605E-10	1.01002E-09	0.00101
3972253768389	397225	3768389	0	0	0	0	0	0	0	0.000189473	0.000189473	0	8.47135E-10	7.6735E-09	8.52063E-09	0.0085206
3972753768389	397275	3768389	0	0	0	0	0	0	0	0.000750467	0.000750467	0	3.35534E-09	3.03933E-08	3.37486E-08	0.0337486
3973253768389	397325	3768389	0	0	0	0	0	0	0	0.00058123	0.00058123	0	2.59868E-09	2.35393E-08	2.6138E-08	0.026138
3973753768389	397375	3768389	0	0	0	0	0	0	0	0.000206027	0.000206027	0	9.21148E-10	8.34392E-09	9.26507E-09	0.0092651
3974253768389	397425	3768389	0	0	0	0	0	0	0	0.000112723	0.000112723	0	5.03988E-10	4.56521E-09	5.06919E-09	0.0050692
3974753768389	397475	3768389	0	0	0	0	0	0	0	7.12803E-05	7.12803E-05	0	3.18695E-10	2.88679E-09	3.20548E-09	0.0032055
3975253768389	397525	3768389	0	0	0	0	0	0	0	4.89604E-05	4.89604E-05	0	2.18902E-10	1.98285E-09	2.20176E-09	0.0022018
3964253768439	396425	3768439	0	0	0	0	0	0	0	2.38928E-05	2.38928E-05	0	1.06825E-10	9.67638E-10	1.07446E-09	0.0010745
3964753768439	396475	3768439	0	0	0	0	0	0	0	2.46051E-05	2.46051E-05	0	1.10009E-10	9.96485E-10	1.10649E-09	0.0011065
3965253768439	396525	3768439	0	0	0	0	0	0	0	2.54921E-05	2.54921E-05	0	1.13975E-10	1.03241E-09	1.14638E-09	0.0011464
3971753768439	397175	3768439	0	0	0	0	0	0	0	0.000102075	0.000102075	0	4.5638E-10	4.13397E-09	4.59035E-09	0.0045903
3972253768439	397225	3768439	0	0	0	0	0	0	0	0.000198768	0.000198768	0	8.88695E-10	8.04995E-09	8.93864E-09	0.0089386
3972753768439	397275	3768439	0	0	0	0	0	0	0	0.000754179	0.000754179	0	3.37194E-09	3.05436E-08	3.39155E-08	0.0339155
3973253768439	397325	3768439	0	0	0	0	0	0	0	0.000567481	0.000567481	0	2.53721E-09	2.29825E-08	2.55197E-08	0.0255197
3973753768439	397375	3768439	0	0	0	0	0	0	0	0.000190445	0.000190445	0	8.51479E-10	7.71285E-09	8.56433E-09	0.0085643
3974253768439	397425	3768439	0	0	0	0	0	0	0	0.000104214	0.000104214	0	4.65941E-10	4.22057E-09	4.68651E-09	0.0046865
3974753768439	397475	3768439	0	0	0	0	0	0	0	7.37959E-05	7.37959E-05	0	3.29942E-10	2.98867E-09	3.31861E-09	0.0033186
3975253768439	397525	3768439	0	0	0	0	0	0	0	5.18253E-05	5.18253E-05	0	2.31712E-10	2.09888E-09	2.33059E-09	0.0023306
3964253768489	396425	3768489	0	0	0	0	0	0	0	2.72532E-05	2.72532E-05	0	1.21849E-10	1.10373E-09	1.22558E-09	0.0012256
3964753768489	396475	3768489	0	0	0	0	0	0	0	2.8417E-05	2.8417E-05	0	1.27053E-10	1.15087E-09	1.27792E-09	0.0012779
3965253768489	396525	3768489	0	0	0	0	0	0	0	2.95221E-05	2.95221E-05	0	1.31994E-10	1.19562E-09	1.32761E-09	0.0013276
3970753768489	397075	3768489	0	0	0	0	0	0	0	5.81399E-05	5.81399E-05	0	2.59944E-10	2.35462E-09	2.61456E-09	0.0026146
3971253768489	397125	3768489	0	0	0	0	0	0	0	7.3862E-05	7.3862E-05	0	3.30238E-10	2.99135E-09	3.32159E-09	0.0033216
3971753768489	397175	3768489	0	0	0	0	0	0	0	0.000106825	0.000106825	0	4.77613E-10	4.3263E-09	4.80392E-09	0.0048039
3972253768489	397225	3768489	0	0	0	0	0	0	0	0.000197614	0.000197614	0	8.83533E-10	8.00319E-09	8.88672E-09	0.0088867
3972753768489	397275	3768489	0	0	0	0	0	0	0	0.000740434	0.000740434	0	3.31049E-09	2.9987E-08	3.32975E-08	0.0332975
3973253768489	397325	3768489	0	0	0	0	0	0	0	0.000489762	0.000489762	0	2.18973E-09	1.9835E-08	2.20247E-08	0.0220247
3973753768489	397375	3768489	0	0	0	0	0	0	0	0.000187596	0.000187596	0	8.38742E-10	7.59747E-09	8.43621E-09	0.0084362
3974253768489	397425	3768489	0	0	0	0	0	0	0	0.000103543	0.000103543	0	4.62944E-10	4.19342E-09	4.65637E-09	0.0046564
3974753768489	397475	3768489	0	0	0	0	0	0	0	6.45349E-05	6.45349E-05	0	2.88536E-10	2.61361E-09	2.90214E-09	0.0029021
3975253768489	397525	3768489	0	0	0	0	0	0	0	4.67519E-05	4.67519E-05	0	2.09028E-10	1.89341E-09	2.10244E-09	0.0021024
3964253768539	396425	3768539	0	0	0	0	0	0	0	3.16938E-05	3.16938E-05	0	1.41703E-10	1.28357E-09	1.42528E-09	0.0014253
3964753768539	396475	3768539	0	0	0	0	0	0	0	3.34216E-05	3.34216E-05	0	1.49428E-10	1.35355E-09	1.50298E-09	0.001503
3965253768539	396525	3768539	0	0	0	0	0	0	0	3.45357E-05	3.45357E-05	0	1.54409E-10	1.39866E-09	1.55307E-09	0.0015531
3965753768539	396575	3768539	0	0	0	0	0	0	0	3.32369E-05	3.32369E-05	0	1.48602E-10	1.34607E-09	1.49467E-09	0.0014947
3970253768539	397025	3768539	0	0	0	0	0	0	0	5.49967E-05	5.49967E-05	0	2.45891E-10	2.22732E-09	2.47321E-09	0.0024732
3970753768539	397075	3768539	0	0	0	0	0	0	0	6.43527E-05	6.43527E-05	0	2.87721E-10	2.60623E-09	2.89395E-09	0.0028939
3971253768539	397125	3768539	0	0	0	0	0	0	0	8.08591E-05	8.08591E-05	0	3.61521E-10	3.27472E-09	3.63625E-09	0.0036362
3971753768539	397175	3768539	0	0	0	0	0	0	0	0.000115452	0.000115452	0	5.16187E-10	4.67571E-09	5.19189E-09	0.0051919
3972253768539	397225	3768539	0	0	0	0	0	0	0	0.000202489	0.000202489	0	9.0533E-10	8.20064E-09	9.10597E-09	0.009106
3972753768539	397275	3768539	0	0	0	0	0	0	0	0.000674464	0.000674464	0	3.01553E-09	2.73152E-08	3.03308E-08	0.0303308
3973253768539	397325	3768539	0	0	0	0	0	0	0	0.000472319	0.000472319	0	2.11174E-09	1.91285E-08	2.12403E-08	0.0212403
3973753768539	397375	3768539	0	0	0	0	0	0	0	0.000188947	0.000188947	0	8.44784E-10	7.6522E-09	8.49698E-09	0.008497

Garvey Reservoir Rehab - Unmitigated Junction Structure			Demolition - 2025	Demolition - 2026	Site Preparation - 2025	ite Preparation - 202	Grading - 2025	Grading - 2026	Infrastructure - 2025	nfrastructure - 2026	Paving - 2025	rchitectural Coating - 202	Child Risk			
Unique Identifier	X (UTM)	Y (UTM)	1900	1900	1900	1900	1900	1900	2025	2026	1900	1900	3rd Trimester	0<2	Total	per million
3974253768539	397425	3768539	0	0	0	0	0	0	0	0.000101197	0.000101197	0	4.52453E-10	4.0984E-09	4.55085E-09	0.0045509
3974753768539	397475	3768539	0	0	0	0	0	0	0	6.5278E-05	6.5278E-05	0	2.91859E-10	2.64371E-09	2.93556E-09	0.0029356
3975253768539	397525	3768539	0	0	0	0	0	0	0	4.64848E-05	4.64848E-05	0	2.07834E-10	1.8826E-09	2.09043E-09	0.0020904
3964253768589	396425	3768589	0	0	0	0	0	0	0	3.69868E-05	3.69868E-05	0	1.65368E-10	1.49793E-09	1.6633E-09	0.0016633
3964753768589	396475	3768589	0	0	0	0	0	0	0	4.01359E-05	4.01359E-05	0	1.79448E-10	1.62547E-09	1.80492E-09	0.0018049
3965253768589	396525	3768589	0	0	0	0	0	0	0	3.99925E-05	3.99925E-05	0	1.78807E-10	1.61966E-09	1.79847E-09	0.0017985
3965753768589	396575	3768589	0	0	0	0	0	0	0	3.85848E-05	3.85848E-05	0	1.72513E-10	1.56265E-09	1.73517E-09	0.0017352
3966253768589	396625	3768589	0	0	0	0	0	0	0	3.8145E-05	3.8145E-05	0	1.70547E-10	1.54484E-09	1.71539E-09	0.0017154
3968253768589	396825	3768589	0	0	0	0	0	0	0	4.69972E-05	4.69972E-05	0	2.10125E-10	1.90335E-09	2.11347E-09	0.0021135
3968753768589	396875	3768589	0	0	0	0	0	0	0	4.98163E-05	4.98163E-05	0	2.22729E-10	2.01752E-09	2.24025E-09	0.0022402
3969253768589	396925	3768589	0	0	0	0	0	0	0	5.41098E-05	5.41098E-05	0	2.41925E-10	2.1914E-09	2.43333E-09	0.0024333
3969753768589	396975	3768589	0	0	0	0	0	0	0	5.80856E-05	5.80856E-05	0	2.59701E-10	2.35242E-09	2.61212E-09	0.0026121
3970253768589	397025	3768589	0	0	0	0	0	0	0	6.38991E-05	6.38991E-05	0	2.85693E-10	2.58786E-09	2.87355E-09	0.0028736
3970753768589	397075	3768589	0	0	0	0	0	0	0	7.2588E-05	7.2588E-05	0	3.24542E-10	2.93975E-09	3.26429E-09	0.0032643
3971253768589	397125	3768589	0	0	0	0	0	0	0	9.11865E-05	9.11865E-05	0	4.07695E-10	3.69297E-09	4.10067E-09	0.0041007
3971753768589	397175	3768589	0	0	0	0	0	0	0	0.000129253	0.000129253	0	5.7789E-10	5.23463E-09	5.81252E-09	0.0058125
3972253768589	397225	3768589	0	0	0	0	0	0	0	0.000226062	0.000226062	0	1.01072E-09	9.15531E-09	1.0166E-08	0.010166
3972753768589	397275	3768589	0	0	0	0	0	0	0	0.000720408	0.000720408	0	3.22095E-09	2.91759E-08	3.23969E-08	0.0323969
3973253768589	397325	3768589	0	0	0	0	0	0	0	0.000469065	0.000469065	0	2.0972E-09	1.89968E-08	2.10939E-08	0.0210939
3973753768589	397375	3768589	0	0	0	0	0	0	0	0.000188904	0.000188904	0	8.44589E-10	7.65043E-09	8.49502E-09	0.008495
3974253768589	397425	3768589	0	0	0	0	0	0	0	9.82419E-05	9.82419E-05	0	4.3924E-10	3.97872E-09	4.41796E-09	0.004418
3974753768589	397475	3768589	0	0	0	0	0	0	0	6.48067E-05	6.48067E-05	0	2.89751E-10	2.62462E-09	2.91437E-09	0.0029144
3975253768589	397525	3768589	0	0	0	0	0	0	0	4.6876E-05	4.6876E-05	0	2.09583E-10	1.89844E-09	2.10802E-09	0.002108
3964253768639	396425	3768639	0	0	0	0	0	0	0	4.45817E-05	4.45817E-05	0	1.99325E-10	1.80552E-09	2.00485E-09	0.0020048
3964753768639	396475	3768639	0	0	0	0	0	0	0	5.04824E-05	5.04824E-05	0	2.25707E-10	2.0445E-09	2.2702E-09	0.0022702
3965253768639	396525	3768639	0	0	0	0	0	0	0	4.74389E-05	4.74389E-05	0	2.121E-10	1.92124E-09	2.13334E-09	0.0021333
3965753768639	396575	3768639	0	0	0	0	0	0	0	4.7726E-05	4.7726E-05	0	2.13384E-10	1.93286E-09	2.14625E-09	0.0021462
3966253768639	396625	3768639	0	0	0	0	0	0	0	4.8578E-05	4.8578E-05	0	2.17193E-10	1.96737E-09	2.18456E-09	0.0021846
3966753768639	396675	3768639	0	0	0	0	0	0	0	4.95918E-05	4.95918E-05	0	2.21725E-10	2.00842E-09	2.23015E-09	0.0022301
3967253768639	396725	3768639	0	0	0	0	0	0	0	5.11221E-05	5.11221E-05	0	2.28567E-10	2.0704E-09	2.29897E-09	0.002299
3967753768639	396775	3768639	0	0	0	0	0	0	0	5.38951E-05	5.38951E-05	0	2.40965E-10	2.1827E-09	2.42367E-09	0.0024237
3968253768639	396825	3768639	0	0	0	0	0	0	0	5.6558E-05	5.6558E-05	0	2.52871E-10	2.29055E-09	2.54342E-09	0.0025434
3968753768639	396875	3768639	0	0	0	0	0	0	0	6.06448E-05	6.06448E-05	0	2.71143E-10	2.45606E-09	2.72721E-09	0.0027272
3969253768639	396925	3768639	0	0	0	0	0	0	0	6.52452E-05	6.52452E-05	0	2.91712E-10	2.64237E-09	2.93409E-09	0.0029341
3969753768639	396975	3768639	0	0	0	0	0	0	0	6.93001E-05	6.93001E-05	0	3.09841E-10	2.8066E-09	3.11644E-09	0.0031164
3970253768639	397025	3768639	0	0	0	0	0	0	0	7.47681E-05	7.47681E-05	0	3.34289E-10	3.02805E-09	3.36233E-09	0.0033623
3970753768639	397075	3768639	0	0	0	0	0	0	0	8.29754E-05	8.29754E-05	0	3.70984E-10	3.36043E-09	3.73142E-09	0.0037314
3971253768639	397125	3768639	0	0	0	0	0	0	0	9.97722E-05	9.97722E-05	0	4.46082E-10	4.04069E-09	4.48677E-09	0.0044868
3971753768639	397175	3768639	0	0	0	0	0	0	0	0.000145964	0.000145964	0	6.52604E-10	5.9114E-09	6.564E-09	0.006564
3972253768639	397225	3768639	0	0	0	0	0	0	0	0.000287662	0.000287662	0	1.28614E-09	1.16501E-08	1.29362E-08	0.0129362
3972753768639	397275	3768639	0	0	0	0	0	0	0	0.001002035	0.001002035	0	4.48011E-09	4.05816E-08	4.50617E-08	0.0450617
3973253768639	397325	3768639	0	0	0	0	0	0	0	0.000422525	0.000422525	0	1.88911E-09	1.71119E-08	1.9001E-08	0.019001
3973753768639	397375	3768639	0	0	0	0	0	0	0	0.000186159	0.000186159	0	8.32318E-10	7.53928E-09	8.3716E-09	0.0083716
3974253768639	397425	3768639	0	0	0	0	0	0	0	0.000108512	0.000108512	0	4.85158E-10	4.39465E-09	4.87981E-09	0.0048798
3974753768639	397475	3768639	0	0	0	0	0	0	0	6.44145E-05	6.44145E-05	0	2.87998E-10	2.60873E-09	2.89673E-09	0.0028967
3975253768639	397525	3768639	0	0	0	0	0	0	0	4.7333E-05	4.7333E-05	0	2.11626E-10	1.91695E-09	2.12857E-09	0.0021286
3964253768689	396425	3768689	0	0	0	0	0	0	0	5.74646E-05	5.74646E-05	0	2.56925E-10	2.32727E-09	2.58419E-09	0.0025842
3964753768689	396475	3768689	0	0	0	0	0	0	0	6.81666E-05	6.81666E-05	0	3.04774E-10	2.76069E-09	3.06546E-09	0.0030655
3965253768689	396525	3768689	0	0	0	0	0	0	0	7.07517E-05	7.07517E-05	0	3.16331E-10	2.86538E-09	3.18172E-09	0.0031817
3965753768689	396575	3768689	0	0	0	0	0	0	0	6.95382E-05	6.95382E-05	0	3.10906E-10	2.81624E-09	3.12714E-09	0.0031271
3966253768689	396625	3768689	0	0	0	0	0	0	0	7.03557E-05	7.03557E-05	0	3.14561E-10	2.84935E-09	3.16391E-09	0.0031639
3966753768689	396675	3768689	0	0	0	0	0	0	0	6.98859E-05	6.98859E-05	0	3.1246E-10	2.83032E-09	3.14278E-09	0.0031428
3967253768689	396725	3768689	0	0	0	0	0	0	0	7.10507E-05	7.10507E-05	0	3.17668E-10	2.87749E-09	3.19516E-09	0.0031952
3967753768689	396775	3768689	0	0	0	0	0	0	0	7.20714E-05	7.20714E-05	0	3.22232E-10	2.91883E-09	3.24106E-09	0.0032411
3968253768689	396825	3768689	0	0	0	0	0	0	0	7.59723E-05	7.59723E-05	0	3.39673E-10	3.07681E-09	3.41649E-09	0.0034165
3968753768689	396875	3768689	0	0	0	0	0	0	0	8.00195E-05	8.00195E-05	0	3.57768E-10	3.24072E-09	3.59849E-09	0.0035985
3969253768689	396925	3768689	0	0	0	0	0	0	0	8.34748E-05	8.34748E-05	0	3.73216E-10	3.38066E-09	3.75387E-09	0.0037539
3969753768689	396975	3768689	0	0	0	0	0	0	0	8.70377E-05	8.70377E-05	0	3.89146E-10	3.52495E-09	3.9141E-09	0.0039141
3970253768689	397025	3768689	0	0	0	0	0	0	0	9.20079E-05	9.20079E-05	0	4.11368E-10	3.72624E-09	4.13761E-09	0.0041376
3970753768689	397075	3768689	0	0	0	0	0	0	0	0.000100925	0.000100925	0	4.51235E-10	4.08736E-09	4.5386E-09	0.0045386
3971253768689	397125	3768689	0	0	0	0	0	0	0	0.000117858	0.000117858	0	5.26944E-10	4.77315E-09	5.30009E-09	0.0053001
3971753768689	397175	3768689	0	0	0	0	0	0	0	0.000164349	0.000164349	0	7.34805E-10	6.65599E-09	7.3908E-09	0.0073908
3972253768689	397225	3768689	0	0	0	0	0	0	0	0.000372703	0.000372703	0	1.66636E-09	1.50941E-08	1.67605E-08	0.0167605
3972753768689	397275	3768689	0	0	0	0	0	0	0	0.001023715	0.001023715	0	4.57704E-09	4.14596E-08	4.60366E-08	0.0460366
3973253768689	397325	3768689	0	0	0	0	0	0	0	0.000342623	0.000342623	0	1.53187E-09	1.3876E-08	1.54078E-08	0.0154078
3973753768689	397375	3768689	0	0	0	0	0	0	0	0.000173454	0.000173454	0	7.75512E-10	7.02472E-09	7.80023E-09	0.0078002
3974253768689	397425	3768689	0	0	0	0	0	0	0	0.000108349	0.000108349	0	4.84428E-10	4.38803E-09	4.87246E-09	0.0048725
3974753768689	397475	3768689	0	0	0	0	0	0	0	7.39421E-05	7.39421E-05	0	3.30596E-10	2.99459E-09	3.32519E-09	0.0033252
3975253768689	397525	3768689	0	0	0	0	0	0	0	5.3666E-05	5.3666E-05	0	2.39941E-10	2.17343E-09	2.41337E-09	0.0024134

Garvey Reservoir Rehab - Unmitigated Junction Structure

Maximum Individual Non-Cancer Impact Calculations - Sensitive Receptors (Maximum Impacted Senior Residential Receptor) (IMPACT AT ALL OTHER LOCATIONS ON THE PROJECT SITE WOULD BE LESS THAN SHOWN)

Maximum Non-cancer Chronic Hazards / Toxicological Endpoints*

Receptor Group	Pollutant	CREL[1]	CONC	WFrac	$CONC_{WF}$	HI		ALIM	BN	CVS	DEV	ENDC	EYE	HEM	IMMUN	KIDN	NS	REPRO	RESP	SK
Project:																				
MEI - Max	DPM	5.00E+00	5.67E-01	1.00E+00	5.67E-01	0.113		-	-	-	-	-	-	-	-	-	-	-	1.13E-01	-
							Total Risk				-			-				-	0.113	
							Threshold				1.00			1.00				1.00	1.00	
							Over?				NO			NO				NO	NO	

Notes:

1. California Air Resources Board, "Consolidated Table of OEHHA/ARB Approved Risk Assessment Health Values," "OEHHA/ARB Approved Chronic Reference Exposure Levels and Target Organs," "OEHHA/ARB Approved Acute Reference Exposure Levels and Target Organs," and "OEHHA/ARB Approved 8-Hour Reference Exposure Levels and Target Organs," http://www.arb.ca.gov/toxics/healthval/healthval.htm. Tables last updated: May 8, 2018. Downloaded: 08/14/18.

Source: ESA, 2020

Where:

$CONC_{WF}$	Pollutant Concentration ($\mu g/m^3$) multiplied by the weight fraction
CREL	Chronic Reference Exposure Level
HI	Hazard Index
MEI	Maximally Exposed Individual
WFrac	Weight fraction of speciated component

* Key to Toxicological Endpoints

ALIM	Alimentary Tract	EYE	Eye	NS	Nervous System
BN	Bone	HEM	Hematologic System	REPRO	Reproductive System
CVS	Cardiovascular System	IMMUN	Immune System	RESP	Respiratory System
DEV	Developmental System	KIDN	Kidney	SK	Skin
ENDC	Endocrine System				

Chronic HI

Garvey Reservoir Rehab - Mitigated Junction Structure

Cancer Risk Summary & Maximum Annual GLC for Chronic Calculations

Cancer Risk Summary

Max Risk: 2.758676

XY	X	Y	Offroad Risk	Haul Risk	Total Risk
7449041451	574490	4145130	0.0016414	0.000172241	0.001814
7448041451	574480	4145140	0.001813058	0.000176146	0.001989
7449041451	574490	4145140	0.002069894	0.00018331	0.002253
7449041451	574490	4145150	0.002339766	0.000188086	0.002528
7450041451	574500	4145150	0.00267526	0.000206193	0.002881
7446041451	574460	4145160	0.002979465	0.000194944	0.003174
7449041451	574490	4145160	0.003256725	0.00019418	0.003451
7450041451	574500	4145160	0.003562668	0.00019435	0.003757
7451041451	574510	4145160	0.003938578	0.000196922	0.004135
7446041451	574460	4145170	0.004198021	0.000191956	0.00439
7447041451	574470	4145170	0.004293193	0.00018933	0.004483
7448041451	574480	4145170	0.004251908	0.000189558	0.004441
7449041451	574490	4145170	0.004272333	0.000180917	0.004453
7450041451	574500	4145170	0.00420932	0.000162872	0.004372
7451041451	574510	4145170	0.004016367	0.000160206	0.004177
7452041451	574520	4145170	0.003756924	0.000155504	0.003912
7446041451	574460	4145180	0.003380145	0.000160486	0.003541
7447041451	574470	4145180	0.003048563	0.000152863	0.003201
7448041451	574480	4145180	0.001728315	0.00019821	0.001927
7449041451	574490	4145180	0.001901712	0.000193672	0.002095
7450041451	574500	4145180	0.002204613	0.000204039	0.002409
7451041451	574510	4145180	0.002540107	0.000223474	0.002764
7452041451	574520	4145180	0.002925577	0.000226511	0.003152
7453041451	574530	4145180	0.00333973	0.000219934	0.00356
7445041451	574450	4145190	0.003790821	0.000221654	0.004012
7446041451	574460	4145190	0.004288847	0.000222948	0.004512
7447041451	574470	4145190	0.004893345	0.000226267	0.00512
7448041451	574480	4145190	0.00538659	0.000221919	0.005609
7449041451	574490	4145190	0.005648206	0.00021493	0.005863
7450041451	574500	4145190	0.00567515	0.00021564	0.005891
7451041451	574510	4145190	0.0056343	0.000209153	0.005843
7452041451	574520	4145190	0.005538258	0.000188647	0.005727
7444041452	574440	4145200	0.005223189	0.000178905	0.005402
7445041452	574450	4145200	0.004774705	0.000174981	0.00495
7446041452	574460	4145200	0.004262338	0.000170825	0.004433
7447041452	574470	4145200	0.003748233	0.000164403	0.003913
7448041452	574480	4145200	0.001781334	0.000208939	0.00199
7449041452	574490	4145200	0.001996015	0.000214787	0.002211
7450041452	574500	4145200	0.002302827	0.000224639	0.002527
7451041452	574510	4145200	0.002698293	0.000238532	0.002937
7443041452	574430	4145210	0.0031898	0.000264968	0.003455
7444041452	574440	4145210	0.003782564	0.000269047	0.004052
7445041452	574450	4145210	0.004335782	0.000253704	0.004589
7446041452	574460	4145210	0.005200157	0.000260101	0.00546
7447041452	574470	4145210	0.00612798	0.000263658	0.006392
7448041452	574480	4145210	0.007034075	0.000263722	0.007298
7449041452	574490	4145210	0.007726791	0.000253991	0.007981
7450041452	574500	4145210	0.007971459	0.000250624	0.008222
7451041452	574510	4145210	0.00789758	0.000244378	0.008142
7443041452	574430	4145220	0.007709843	0.00021769	0.007928
7444041452	574440	4145220	0.007104476	0.000205334	0.00731
7445041452	574450	4145220	0.006301377	0.000194166	0.006496
7446041452	574460	4145220	0.005427875	0.000186785	0.005615
7447041452	574470	4145220	0.004607393	0.000177562	0.004785
7448041452	574480	4145220	0.001844782	0.000252979	0.002098
7449041452	574490	4145220	0.0020838	0.000239355	0.002323
7450041452	574500	4145220	0.002427116	0.000255055	0.002682
7451041452	574510	4145220	0.002878643	0.000301683	0.00318
7452041452	574520	4145220	0.003430991	0.000304419	0.003735
7453041452	574530	4145220	0.004046353	0.000285165	0.004332
7444041452	574440	4145230	0.004998078	0.000296866	0.005295
7445041452	574450	4145230	0.006336143	0.000313547	0.00665

Max GLC for Chronic Calcs

Max GLC: 0.051036

XY	X	Y	2025	2026	2027	2034	2035
57449041451	574490	4145130	3.036E-05	3.419E-05	0		
57448041451	574480	4145140	3.354E-05	3.745E-05	0		
57449041451	574490	4145140	3.829E-05	4.236E-05	0		
57449041451	574490	4145150	4.328E-05	4.746E-05	0		
57450041451	574500	4145150	4.949E-05	5.407E-05	0		
57446041451	574460	4145160	5.511E-05	5.945E-05	0		
57449041451	574490	4145160	6.024E-05	6.456E-05	0		
57450041451	574500	4145160	6.59E-05	7.022E-05	0		
57451041451	574510	4145160	7.285E-05	7.723E-05	0		
57446041451	574460	4145170	7.765E-05	8.192E-05	0		
57447041451	574470	4145170	7.941E-05	8.362E-05	0		
57448041451	574480	4145170	7.865E-05	8.287E-05	0		
57449041451	574490	4145170	7.903E-05	8.305E-05	0		
57450041451	574500	4145170	7.786E-05	8.148E-05	0		
57451041451	574510	4145170	7.429E-05	7.786E-05	0		
57452041451	574520	4145170	6.949E-05	7.295E-05	0		
57446041451	574460	4145180	6.252E-05	6.609E-05	0		
57447041451	574470	4145180	5.639E-05	5.979E-05	0		
57448041451	574480	4145180	3.197E-05	3.638E-05	0		
57449041451	574490	4145180	3.518E-05	3.948E-05	0		
57450041451	574500	4145180	4.078E-05	4.532E-05	0		
57451041451	574510	4145180	4.699E-05	5.196E-05	0		
57452041451	574520	4145180	5.412E-05	5.915E-05	0		
57453041451	574530	4145180	6.178E-05	6.667E-05	0		
57445041451	574450	4145190	7.012E-05	7.505E-05	0		
57446041451	574460	4145190	7.933E-05	8.429E-05	0		
57447041451	574470	4145190	9.051E-05	9.555E-05	0		
57448041451	574480	4145190	9.964E-05	0.0001046	0		
57449041451	574490	4145190	0.0001045	0.0001093	0		
57450041451	574500	4145190	0.000105	0.0001098	0		
57451041451	574510	4145190	0.0001042	0.0001089	0		
57452041451	574520	4145190	0.0001024	0.0001066	0		
57444041452	574440	4145200	9.662E-05	0.0001006	0		
57445041452	574450	4145200	8.832E-05	9.221E-05	0		
57446041452	574460	4145200	7.884E-05	8.264E-05	0		
57447041452	574470	4145200	6.933E-05	7.299E-05	0		
57448041452	574480	4145200	3.295E-05	3.76E-05	0		
57449041452	574490	4145200	3.692E-05	4.17E-05	0		
57450041452	574500	4145200	4.26E-05	4.759E-05	0		
57451041452	574510	4145200	4.991E-05	5.522E-05	0		
57443041452	574430	4145210	5.9E-05	6.49E-05	0		
57444041452	574440	4145210	6.997E-05	7.595E-05	0		
57445041452	574450	4145210	8.02E-05	8.584E-05	0		
57446041452	574460	4145210	9.619E-05	0.000102	0		
57447041452	574470	4145210	0.0001134	0.0001192	0		
57448041452	574480	4145210	0.0001301	0.000136	0		
57449041452	574490	4145210	0.0001429	0.0001486	0		
57450041452	574500	4145210	0.0001475	0.000153	0		
57451041452	574510	4145210	0.0001461	0.0001515	0		
57443041452	574430	4145220	0.0001426	0.0001475	0		
57444041452	574440	4145220	0.0001314	0.000136	0		
57445041452	574450	4145220	0.0001166	0.0001209	0		
57446041452	574460	4145220	0.0001004	0.0001046	0		
57447041452	574470	4145220	8.523E-05	8.917E-05	0		
57448041452	574480	4145220	3.412E-05	3.975E-05	0		
57449041452	574490	4145220	3.855E-05	4.387E-05	0		
57450041452	574500	4145220	4.49E-05	5.057E-05	0		
57451041452	574510	4145220	5.325E-05	5.996E-05	0		
57452041452	574520	4145220	6.346E-05	7.023E-05	0		
57453041452	574530	4145220	7.485E-05	8.119E-05	0		
57444041452	574440	4145230	9.245E-05	9.905E-05	0		
57445041452	574450	4145230	0.0001172	0.0001242	0		

Garvey Reservoir Rehab - Mitigated Junction Structure

Cancer Risk Summary & Maximum Annual GLC for Chronic Calculations

Cancer Risk Summary

Max Risk: 2.758676

XY	X	Y	Offroad Risk	Haul Risk	Total Risk
7446041452	574460	4145230	0.007957118	0.000316961	0.008274
7447041452	574470	4145230	0.00959113	0.000316007	0.009907
7448041452	574480	4145230	0.01110824	0.000309017	0.011417
7449041452	574490	4145230	0.012164264	0.000283383	0.012448
7450041452	574500	4145230	0.01209647	0.00028826	0.012385
7451041452	574510	4145230	0.011589318	0.000247919	0.011837
7452041452	574520	4145230	0.01026994	0.000237862	0.010508
7444041452	574440	4145240	0.008638101	0.000224004	0.008862
7445041452	574450	4145240	0.007052761	0.000209105	0.007262
7446041452	574460	4145240	0.00569036	0.000198994	0.005889
7447041452	574470	4145240	0.001887371	0.000283921	0.002171
7448041452	574480	4145240	0.0021768	0.000322535	0.002499
7449041452	574490	4145240	0.002530111	0.000313907	0.002844
7450041452	574500	4145240	0.003003366	0.000331402	0.003335
7451041452	574510	4145240	0.003581789	0.000313768	0.003896
7445041452	574450	4145250	0.004401837	0.000329989	0.004732
7446041452	574460	4145250	0.005687753	0.000361698	0.006049
7447041452	574470	4145250	0.00751689	0.000386264	0.007903
7448041452	574480	4145250	0.010037441	0.000381528	0.010419
7446041452	574460	4145260	0.013325021	0.000382052	0.013707
7447041452	574470	4145260	0.017000245	0.000382573	0.017383
7448041452	574480	4145260	0.020234806	0.000355945	0.020591
7447041452	574470	4145270	0.021008355	0.000349043	0.021357
7449041451	574490	4145130	0.019065358	0.000301214	0.019367
7448041451	574480	4145140	0.015746488	0.000277855	0.016024
7449041451	574490	4145140	0.012352002	0.000264428	0.012616
7449041451	574490	4145150	0.009313435	0.000236099	0.00955
7450041451	574500	4145150	0.007079271	0.00021525	0.007295
7446041451	574460	4145160	0.00191388	0.000313784	0.002228
7449041451	574490	4145160	0.00221765	0.000362427	0.00258
7450041451	574500	4145160	0.002602251	0.000383114	0.002985
7451041451	574510	4145160	0.003089413	0.000363536	0.003453
7446041451	574460	4145170	0.003733892	0.000359807	0.004094
7447041451	574470	4145170	0.038829517	0.000421844	0.039251
7448041451	574480	4145170	0.026104647	0.000332264	0.026437
7449041451	574490	4145170	0.01611023	0.00028009	0.01639
7450041451	574500	4145170	0.011070432	0.000247927	0.011318
7451041451	574510	4145170	0.008668956	0.000248338	0.008917
7452041451	574520	4145170	0.001914749	0.000328899	0.002244
7446041451	574460	4145180	0.002230253	0.000380076	0.00261
7447041451	574470	4145180	0.002626153	0.000411093	0.003037
7448041451	574480	4145180	0.003122875	0.000394979	0.003518
7449041451	574490	4145180	0.085003831	0.000497511	0.085501
7450041451	574500	4145180	0.041405693	0.000401771	0.041807
7451041451	574510	4145180	0.022008318	0.000333487	0.022342
7452041451	574520	4145180	0.01580081	0.000335929	0.016137
7453041451	574530	4145180	0.010159123	0.0003072	0.010466
7445041451	574450	4145190	0.001931263	0.000443384	0.002375
7446041451	574460	4145190	0.00222243	0.000420208	0.002643
7447041451	574470	4145190	0.002617896	0.000455999	0.003074
7448041451	574480	4145190	0.003149385	0.000493632	0.003643
7449041451	574490	4145190	0.373205327	0.000863369	0.374069
7450041451	574500	4145190	0.091873201	0.000682285	0.092555
7451041451	574510	4145190	0.036885216	0.000511882	0.037397
7452041451	574520	4145190	0.019554258	0.000399673	0.019954
7444041452	574440	4145200	0.011937415	0.000346425	0.012284
7445041452	574450	4145200	0.001916488	0.000534743	0.002451
7446041452	574460	4145200	0.00221287	0.000552307	0.002765
7447041452	574470	4145200	0.00260399	0.000601251	0.003205
7448041452	574480	4145200	0.003113315	0.000592027	0.003705
7449041452	574490	4145200	0.548440089	0.001888167	0.550328
7450041452	574500	4145200	0.120659627	0.000990481	0.12165

Max GLC for Chronic Calcs

Max GLC: 0.051036

XY	X	Y	2025	2026	2027	2034	2035
57446041452	574460	4145230	0.0001472	0.0001542	0		
57447041452	574470	4145230	0.0001774	0.0001844	0		
57448041452	574480	4145230	0.0002055	0.0002123	0		
57449041452	574490	4145230	0.000225	0.0002313	0		
57450041452	574500	4145230	0.0002238	0.0002302	0		
57451041452	574510	4145230	0.0002144	0.0002199	0		
57452041452	574520	4145230	0.00019	0.0001953	0		
57444041452	574440	4145240	0.0001598	0.0001648	0		
57445041452	574450	4145240	0.0001305	0.0001351	0		
57446041452	574460	4145240	0.0001053	0.0001097	0		
57447041452	574470	4145240	3.491E-05	4.123E-05	0		
57448041452	574480	4145240	4.027E-05	4.744E-05	0		
57449041452	574490	4145240	4.68E-05	5.378E-05	0		
57450041452	574500	4145240	5.555E-05	6.292E-05	0		
57451041452	574510	4145240	6.625E-05	7.323E-05	0		
57445041452	574450	4145250	8.142E-05	8.876E-05	0		
57446041452	574460	4145250	0.0001052	0.0001133	0		
57447041452	574470	4145250	0.000139	0.0001476	0		
57448041452	574480	4145250	0.0001857	0.0001942	0		
57446041452	574460	4145260	0.0002465	0.000255	0		
57447041452	574470	4145260	0.0003145	0.000323	0		
57448041452	574480	4145260	0.0003743	0.0003822	0		
57447041452	574470	4145270	0.0003886	0.0003964	0		
57449041451	574490	4145130	0.0003527	0.0003594	0		
57448041451	574480	4145140	0.0002913	0.0002975	0		
57449041451	574490	4145140	0.0002285	0.0002344	0		
57449041451	574490	4145150	0.0001723	0.0001775	0		
57450041451	574500	4145150	0.0001309	0.0001357	0		
57446041451	574460	4145160	3.54E-05	4.238E-05	0		
57449041451	574490	4145160	4.102E-05	4.908E-05	0		
57450041451	574500	4145160	4.814E-05	5.665E-05	0		
57451041451	574510	4145160	5.715E-05	6.523E-05	0		
57446041451	574460	4145170	6.907E-05	7.707E-05	0		
57447041451	574470	4145170	0.0007183	0.0007276	0		
57448041451	574480	4145170	0.0004829	0.0004903	0		
57449041451	574490	4145170	0.000298	0.0003042	0		
57450041451	574500	4145170	0.0002048	0.0002103	0		
57451041451	574510	4145170	0.0001604	0.0001659	0		
57452041451	574520	4145170	3.542E-05	4.273E-05	0		
57446041451	574460	4145180	4.125E-05	4.971E-05	0		
57447041451	574470	4145180	4.858E-05	5.772E-05	0		
57448041451	574480	4145180	5.777E-05	6.655E-05	0		
57449041451	574490	4145180	0.0015724	0.0015834	0		
57450041451	574500	4145180	0.0007659	0.0007748	0		
57451041451	574510	4145180	0.0004071	0.0004145	0		
57452041451	574520	4145180	0.0002923	0.0002997	0		
57453041451	574530	4145180	0.0001879	0.0001948	0		
57445041451	574450	4145190	3.572E-05	4.558E-05	0		
57446041451	574460	4145190	4.111E-05	5.045E-05	0		
57447041451	574470	4145190	4.842E-05	5.856E-05	0		
57448041451	574480	4145190	5.826E-05	6.923E-05	0		
57449041451	574490	4145190	0.0069034	0.0069226	0		
57450041451	574500	4145190	0.0016994	0.0017146	0		
57451041451	574510	4145190	0.0006823	0.0006937	0		
57452041451	574520	4145190	0.0003617	0.0003706	0		
57444041452	574440	4145200	0.0002208	0.0002285	0		
57445041452	574450	4145200	3.545E-05	4.734E-05	0		
57446041452	574460	4145200	4.093E-05	5.321E-05	0		
57447041452	574470	4145200	4.817E-05	6.154E-05	0		
57448041452	574480	4145200	5.759E-05	7.075E-05	0		
57449041452	574490	4145200	0.0101448	0.0101868	0		
57450041452	574500	4145200	0.0022319	0.0022539	0		

Garvey Reservoir Rehab - Mitigated Junction Structure

Cancer Risk Summary & Maximum Annual GLC for Chronic Calculations

Cancer Risk Summary

Max Risk: 2.758676

XY	X	Y	Offroad Risk	Haul Risk	Total Risk
7451041452(	574510	4145200	0.045444658	0.00067592	0.046121
7443041452:	574430	4145210	0.023485013	0.000498438	0.023983
7444041452:	574440	4145210	0.013545787	0.000408989	0.013955
7445041452:	574450	4145210	0.001863035	0.000635985	0.002499
7446041452:	574460	4145210	0.002164631	0.000625858	0.00279
7447041452:	574470	4145210	0.002540107	0.000702559	0.003243
7448041452:	574480	4145210	0.00303031	0.00072702	0.003757
7449041452:	574490	4145210	0.185849323	0.015006687	0.200856
7450041452:	574500	4145210	0.1909052	0.002945821	0.193851
7451041452:	574510	4145210	0.100057168	0.001344858	0.101402
7443041452:	574430	4145220	0.046436799	0.000842668	0.047279
7444041452:	574440	4145220	0.024926507	0.000603635	0.02553
7445041452:	574450	4145220	0.015447064	0.000464707	0.015912
7446041452:	574460	4145220	0.001693115	0.000749516	0.002443
7447041452:	574470	4145220	0.00210466	0.000780439	0.002885
7448041452:	574480	4145220	0.002453626	0.000871357	0.003325
7449041452:	574490	4145220	0.002910801	0.000940092	0.003851
7450041452:	574500	4145220	0.044948371	0.023558733	0.068507
7451041452:	574510	4145220	0.073248505	0.010595996	0.083845
7452041452:	574520	4145220	0.083897831	0.00341908	0.087317
7453041452:	574530	4145220	0.064494806	0.001641429	0.066136
7444041452:	574440	4145230	0.040801196	0.000994938	0.041796
7445041452:	574450	4145230	0.02503124	0.000699457	0.025731
7446041452:	574460	4145230	0.016440074	0.000503145	0.016943
7447041452:	574470	4145230	0.001630536	0.000919555	0.00255
7448041452:	574480	4145230	0.002010791	0.000990996	0.003002
7449041452:	574490	4145230	0.002252416	0.001098428	0.003351
7450041452:	574500	4145230	0.002756526	0.001229985	0.003987
7451041452:	574510	4145230	0.017942844	0.004378619	0.022321
7452041452:	574520	4145230	0.027408815	0.023913414	0.051322
7444041452(	574440	4145240	0.038322799	0.009688413	0.048011
7445041452(	574450	4145240	0.043447339	0.003150906	0.046598
7446041452(	574460	4145240	0.039667383	0.001883458	0.041551
7447041452(	574470	4145240	0.029891123	0.001168739	0.03106
7448041452(	574480	4145240	0.021637623	0.00073941	0.022377
7449041452(	574490	4145240	0.015228037	0.000576419	0.015804
7450041452(	574500	4145240	0.001699633	0.001170091	0.00287
7451041452(	574510	4145240	0.001753956	0.00131898	0.003073
7445041452!	574450	4145250	0.00201166	0.001423011	0.003435
7446041452!	574460	4145250	0.002584434	0.001708758	0.004293
7447041452!	574470	4145250	0.003012927	0.001673482	0.004686
7448041452!	574480	4145250	0.005651248	0.002141556	0.007793
7446041452(	574460	4145260	0.007286564	0.002486635	0.009773
7447041452(	574470	4145260	0.009630242	0.003073221	0.012703
7448041452(	574480	4145260	0.013211596	0.005261813	0.018473
7447041452:	574470	4145270	0.018055399	0.023197761	0.041253
7449041451:	574490	4145130	0.023496747	0.009716595	0.033213
7448041451(	574480	4145140	0.025746121	0.003113409	0.02886
7449041451(	574490	4145140	0.025907349	0.001863694	0.027771
7449041451!	574490	4145150	0.021996584	0.001239002	0.023236
7450041451!	574500	4145150	0.017090202	0.000881715	0.017972
7446041451(	574460	4145160	0.013082961	0.000643776	0.013727
7449041451(	574490	4145160	0.001620975	0.002055559	0.003677
7450041451(	574500	4145160	0.001833483	0.00234681	0.00418
7451041451(	574510	4145160	0.001923441	0.002278778	0.004202
7446041451:	574460	4145170	0.002402345	0.002797621	0.0052
7447041451:	574470	4145170	0.002799549	0.002828144	0.005628
7448041451:	574480	4145170	0.003308005	0.002887402	0.006195
7449041451:	574490	4145170	0.003965956	0.002996358	0.006962
7450041451:	574500	4145170	0.004855102	0.003327701	0.008183
7451041451:	574510	4145170	0.006061924	0.003642527	0.009704
7452041451:	574520	4145170	0.007725922	0.004225297	0.011951

Max GLC for Chronic Calcs

Max GLC: 0.051036

XY	X	Y	2025	2026	2027	2034	2035
57451041452(	574510	4145200	0.0008406	0.0008556	0		
57443041452:	574430	4145210	0.0004344	0.0004455	0		
57444041452:	574440	4145210	0.0002506	0.0002597	0		
57445041452:	574450	4145210	3.446E-05	4.86E-05	0		
57446041452:	574460	4145210	4.004E-05	5.396E-05	0		
57447041452:	574470	4145210	4.699E-05	6.261E-05	0		
57448041452:	574480	4145210	5.605E-05	7.222E-05	0		
57449041452:	574490	4145210	0.0034378	0.0037715	0		
57450041452:	574500	4145210	0.0035313	0.0035968	0		
57451041452:	574510	4145210	0.0018508	0.0018807	0		
57443041452:	574430	4145220	0.000859	0.0008777	0		
57444041452:	574440	4145220	0.0004611	0.0004745	0		
57445041452:	574450	4145220	0.0002857	0.0002961	0		
57446041452:	574460	4145220	3.132E-05	4.799E-05	0		
57447041452:	574470	4145220	3.893E-05	5.629E-05	0		
57448041452:	574480	4145220	4.539E-05	6.476E-05	0		
57449041452:	574490	4145220	5.384E-05	7.475E-05	0		
57450041452:	574500	4145220	0.0008314	0.0013553	0		
57451041452:	574510	4145220	0.0013549	0.0015905	0		
57452041452:	574520	4145220	0.0015519	0.0016279	0		
57453041452:	574530	4145220	0.001193	0.0012295	0		
57444041452:	574440	4145230	0.0007547	0.0007768	0		
57445041452:	574450	4145230	0.000463	0.0004786	0		
57446041452:	574460	4145230	0.0003041	0.0003153	0		
57447041452:	574470	4145230	3.016E-05	5.061E-05	0		
57448041452:	574480	4145230	3.719E-05	5.923E-05	0		
57449041452:	574490	4145230	4.166E-05	6.609E-05	0		
57450041452:	574500	4145230	5.099E-05	7.834E-05	0		
57451041452:	574510	4145230	0.0003319	0.0004293	0		
57452041452:	574520	4145230	0.000507	0.0010388	0		
57444041452(	574440	4145240	0.0007089	0.0009243	0		
57445041452(	574450	4145240	0.0008037	0.0008737	0		
57446041452(	574460	4145240	0.0007337	0.0007756	0		
57447041452(	574470	4145240	0.0005529	0.0005789	0		
57448041452(	574480	4145240	0.0004002	0.0004167	0		
57449041452(	574490	4145240	0.0002817	0.0002945	0		
57450041452(	574500	4145240	3.144E-05	5.746E-05	0		
57451041452(	574510	4145240	3.244E-05	6.177E-05	0		
57445041452!	574450	4145250	3.721E-05	6.885E-05	0		
57446041452!	574460	4145250	4.781E-05	8.58E-05	0		
57447041452!	574470	4145250	5.573E-05	9.294E-05	0		
57448041452!	574480	4145250	0.0001045	0.0001522	0		
57446041452(	574460	4145260	0.0001348	0.0001901	0		
57447041452(	574470	4145260	0.0001781	0.0002465	0		
57448041452(	574480	4145260	0.0002444	0.0003614	0		
57447041452:	574470	4145270	0.000334	0.0008498	0		
57449041451:	574490	4145130	0.0004346	0.0006507	0		
57448041451(	574480	4145140	0.0004762	0.0005455	0		
57449041451(	574490	4145140	0.0004792	0.0005207	0		
57449041451!	574490	4145150	0.0004069	0.0004344	0		
57450041451!	574500	4145150	0.0003161	0.0003357	0		
57446041451(	574460	4145160	0.000242	0.0002563	0		
57449041451(	574490	4145160	2.998E-05	7.569E-05	0		
57450041451(	574500	4145160	3.391E-05	8.61E-05	0		
57451041451(	574510	4145160	3.558E-05	8.625E-05	0		
57446041451:	574460	4145170	4.444E-05	0.0001066	0		
57447041451:	574470	4145170	5.178E-05	0.0001147	0		
57448041451:	574480	4145170	6.119E-05	0.0001254	0		
57449041451:	574490	4145170	7.336E-05	0.00014	0		
57450041451:	574500	4145170	8.981E-05	0.0001638	0		
57451041451:	574510	4145170	0.0001121	0.0001931	0		
57452041451:	574520	4145170	0.0001429	0.0002369	0		

Garvey Reservoir Rehab - Mitigated Junction Structure

Cancer Risk Summary & Maximum Annual GLC for Chronic Calculations

Cancer Risk Summary

Max Risk: 2.758676

XY	X	Y	Offroad Risk	Haul Risk	Total Risk
7446041451	574460	4145180	0.009900984	0.006631688	0.016533
7447041451	574470	4145180	0.015804722	0.008818737	0.024623
7448041451	574480	4145180	0.01781812	0.003553107	0.021371
7449041451	574490	4145180	0.017913727	0.001937619	0.019851
7450041451	574500	4145180	0.016244514	0.001269497	0.017514
7451041451	574510	4145180	0.013577076	0.00093636	0.014513
7452041451	574520	4145180	0.011013502	0.000687559	0.011701
7453041451	574530	4145180	0.001547097	0.005968756	0.007516
7445041451	574450	4145190	0.001729619	0.007416603	0.009146
7446041451	574460	4145190	0.001853474	0.005437201	0.007291
7447041451	574470	4145190	0.002227211	0.007104902	0.009332
7448041451	574480	4145190	0.002553144	0.007608402	0.010162
7449041451	574490	4145190	0.002969469	0.007605733	0.010575
7450041451	574500	4145190	0.003507477	0.007867732	0.011375
7451041451	574510	4145190	0.004205408	0.008179879	0.012385
7452041451	574520	4145190	0.00510455	0.008381608	0.013486
7444041452	574440	4145200	0.006263568	0.009029623	0.015293
7445041452	574450	4145200	0.007673338	0.010873893	0.018547
7446041452	574460	4145200	0.00947249	0.03468237	0.044155
7447041452	574470	4145200	0.011245132	0.012050601	0.023296
7448041452	574480	4145200	0.012500627	0.004238461	0.016739
7449041452	574490	4145200	0.012818738	0.002273198	0.015092
7450041452	574500	4145200	0.012114722	0.001429657	0.013544
7451041452	574510	4145200	0.010701476	0.000978759	0.01168
7443041452	574430	4145210	0.009122655	0.000712475	0.009835
7444041452	574440	4145210	0.001460616	0.024030832	0.025491
7445041452	574450	4145210	0.001630536	0.030949091	0.03258
7446041452	574460	4145210	0.001818708	0.030305345	0.032124
7447041452	574470	4145210	0.00206294	0.033383659	0.035447
7448041452	574480	4145210	0.002343243	0.031485422	0.033829
7449041452	574490	4145210	0.002682214	0.034207067	0.036889
7450041452	574500	4145210	0.003125483	0.033107247	0.036233
7451041452	574510	4145210	0.003721289	0.032160327	0.035882
7443041452	574430	4145220	0.004404879	0.030924808	0.03533
7444041452	574440	4145220	0.005191465	0.031264222	0.036456
7445041452	574450	4145220	0.006151882	0.032133262	0.038285
7446041452	574460	4145220	0.007304382	0.033758578	0.041063
7447041452	574470	4145220	0.008386915	0.016598791	0.024986
7448041452	574480	4145220	0.009242164	0.004442144	0.013684
7449041452	574490	4145220	0.009589391	0.002271457	0.011861
7450041452	574500	4145220	0.009253028	0.001408962	0.010662
7451041452	574510	4145220	0.008492083	0.000973939	0.009466
7452041452	574520	4145220	0.007549918	0.00072083	0.008271
7453041452	574530	4145220	0.002761307	0.000323964	0.003085
7444041452	574440	4145230	0.003012058	0.000331704	0.003344
7445041452	574450	4145230	0.003275847	0.000309173	0.003585
7446041452	574460	4145230	0.003609602	0.000318111	0.003928
7447041452	574470	4145230	0.003912938	0.000305519	0.004218
7448041452	574480	4145230	0.004340997	0.000312636	0.004654
7449041452	574490	4145230	0.004948102	0.000326734	0.005275
7450041452	574500	4145230	0.005522613	0.000329481	0.005852
7451041452	574510	4145230	0.006321367	0.000348048	0.006669
7452041452	574520	4145230	0.007250929	0.000358184	0.007609
7444041452	574440	4145240	0.008267841	0.000357195	0.008625
7445041452	574450	4145240	0.009417299	0.000354823	0.009772
7446041452	574460	4145240	0.010672359	0.000353329	0.011026
7447041452	574470	4145240	0.011969573	0.000355133	0.012325
7448041452	574480	4145240	0.013268526	0.000355567	0.013624
7449041452	574490	4145240	0.014545315	0.000350891	0.014896
7450041452	574500	4145240	0.015637844	0.000343446	0.015981
7451041452	574510	4145240	0.016520036	0.00032391	0.016844
7445041452	574450	4145250	0.016800774	0.00032404	0.017125

Max GLC for Chronic Calcs

Max GLC: 0.051036

XY	X	Y	2025	2026	2027	2034	2035
574460414518	574460	4145180	0.0001831	0.0003306	0		
574470414518	574470	4145180	0.0002923	0.0004885	0		
574480414518	574480	4145180	0.0003296	0.0004086	0		
574490414518	574490	4145180	0.0003314	0.0003744	0		
574500414518	574500	4145180	0.0003005	0.0003287	0		
574510414518	574510	4145180	0.0002511	0.000272	0		
574520414518	574520	4145180	0.0002037	0.000219	0		
574530414518	574530	4145180	2.862E-05	0.0001613	0		
574450414519	574450	4145190	3.199E-05	0.0001969	0		
574460414519	574460	4145190	3.428E-05	0.0001552	0		
574470414519	574470	4145190	4.12E-05	0.0001992	0		
574480414519	574480	4145190	4.723E-05	0.0002164	0		
574490414519	574490	4145190	5.493E-05	0.0002241	0		
574500414519	574500	4145190	6.488E-05	0.0002398	0		
574510414519	574510	4145190	7.779E-05	0.0002597	0		
574520414519	574520	4145190	9.442E-05	0.0002808	0		
574440414520	574440	4145200	0.0001159	0.0003167	0		
574450414520	574450	4145200	0.0001419	0.0003837	0		
574460414520	574460	4145200	0.0001752	0.0009464	0		
574470414520	574470	4145200	0.000208	0.000476	0		
574480414520	574480	4145200	0.0002312	0.0003255	0		
574490414520	574490	4145200	0.0002371	0.0002877	0		
574500414520	574500	4145200	0.0002241	0.0002559	0		
574510414520	574510	4145200	0.000198	0.0002197	0		
574430414521	574430	4145210	0.0001687	0.0001846	0		
574440414521	574440	4145210	2.702E-05	0.0005614	0		
574450414521	574450	4145210	3.016E-05	0.0007184	0		
574460414521	574460	4145210	3.364E-05	0.0007075	0		
574470414521	574470	4145210	3.816E-05	0.0007805	0		
574480414521	574480	4145210	4.334E-05	0.0007435	0		
574490414521	574490	4145210	4.961E-05	0.0008103	0		
574500414521	574500	4145210	5.781E-05	0.000794	0		
574510414521	574510	4145210	6.883E-05	0.000784	0		
574430414522	574430	4145220	8.148E-05	0.0007692	0		
574440414522	574440	4145220	9.603E-05	0.0007913	0		
574450414522	574450	4145220	0.0001138	0.0008283	0		
574460414522	574460	4145220	0.0001351	0.0008858	0		
574470414522	574470	4145220	0.0001551	0.0005242	0		
574480414522	574480	4145220	0.000171	0.0002697	0		
574490414522	574490	4145220	0.0001774	0.0002279	0		
574500414522	574500	4145220	0.0001712	0.0002025	0		
574510414522	574510	4145220	0.0001571	0.0001787	0		
574520414522	574520	4145220	0.0001397	0.0001557	0		
574530414522	574530	4145220	5.108E-05	5.828E-05	0		
574440414523	574440	4145230	5.572E-05	6.309E-05	0		
574450414523	574450	4145230	6.06E-05	6.747E-05	0		
574460414523	574460	4145230	6.677E-05	7.384E-05	0		
574470414523	574470	4145230	7.238E-05	7.917E-05	0		
574480414523	574480	4145230	8.03E-05	8.725E-05	0		
574490414523	574490	4145230	9.153E-05	9.879E-05	0		
574500414523	574500	4145230	0.0001022	0.0001095	0		
574510414523	574510	4145230	0.0001169	0.0001247	0		
574520414523	574520	4145230	0.0001341	0.0001421	0		
574440414524	574440	4145240	0.0001529	0.0001609	0		
574450414524	574450	4145240	0.0001742	0.0001821	0		
574460414524	574460	4145240	0.0001974	0.0002053	0		
574470414524	574470	4145240	0.0002214	0.0002293	0		
574480414524	574480	4145240	0.0002454	0.0002533	0		
574490414524	574490	4145240	0.0002691	0.0002769	0		
574500414524	574500	4145240	0.0002893	0.0002969	0		
574510414524	574510	4145240	0.0003056	0.0003128	0		
574450414525	574450	4145250	0.0003108	0.000318	0		

Garvey Reservoir Rehab - Mitigated Junction Structure

Cancer Risk Summary & Maximum Annual GLC for Chronic Calculations

Cancer Risk Summary

Max Risk: 2.758676

XY	X	Y	Offroad Risk	Haul Risk	Total Risk
7446041452	574460	4145250	0.016621728	0.000322966	0.016945
7447041452	574470	4145250	0.016158033	0.00031429	0.016472
7448041452	574480	4145250	0.0155179	0.000277676	0.015796
7446041452	574460	4145260	0.014421461	0.00026843	0.01469
7447041452	574470	4145260	0.002811718	0.000346068	0.003158
7448041452	574480	4145260	0.003062034	0.000333404	0.003395
7447041452	574470	4145270	0.003337557	0.000315764	0.003653
7449041451	574490	4145130	0.003651756	0.000319586	0.003971
7448041451	574480	4145140	0.004045918	0.000328	0.004374
7449041451	574490	4145140	0.004540902	0.000337849	0.004879
7449041451	574490	4145150	0.005194073	0.000364428	0.005559
7450041451	574500	4145150	0.005893743	0.000373289	0.006267
7446041451	574460	4145160	0.006786365	0.000390013	0.007176
7449041451	574490	4145160	0.007838912	0.000395585	0.008234
7450041451	574500	4145160	0.009080935	0.000395406	0.009476
7451041451	574510	4145160	0.010566757	0.00039054	0.010957
7446041451	574460	4145170	0.012279862	0.000388357	0.012668
7447041451	574470	4145170	0.014187223	0.000391994	0.014579
7448041451	574480	4145170	0.016212355	0.000394829	0.016607
7449041451	574490	4145170	0.018281814	0.000393055	0.018675
7450041451	574500	4145170	0.020182657	0.000388134	0.020571
7451041451	574510	4145170	0.021861865	0.000366648	0.022229
7452041451	574520	4145170	0.022676264	0.00035774	0.023034
7446041451	574460	4145180	0.022562839	0.000358883	0.022922
7447041451	574470	4145180	0.021744095	0.000351535	0.022096
7448041451	574480	4145180	0.020039681	0.000306333	0.020346
7449041451	574490	4145180	0.018483458	0.00029711	0.018781
7450041451	574500	4145180	0.002854741	0.000369477	0.003224
7451041451	574510	4145180	0.003122441	0.000367126	0.00349
7452041451	574520	4145180	0.003386664	0.000332945	0.00372
7453041451	574530	4145180	0.003740845	0.000342505	0.004083
7445041451	574450	4145190	0.004168035	0.000352824	0.004521
7446041451	574460	4145190	0.004775574	0.000393538	0.005169
7447041451	574470	4145190	0.005433525	0.000412262	0.005846
7448041451	574480	4145190	0.006222283	0.000423066	0.006645
7449041451	574490	4145190	0.007198779	0.000433612	0.007632
7450041451	574500	4145190	0.008404298	0.000438703	0.008843
7451041451	574510	4145190	0.009888381	0.000440026	0.010328
7452041451	574520	4145190	0.011728817	0.000435493	0.012164
7444041452	574440	4145200	0.013961678	0.000432017	0.014394
7445041452	574450	4145200	0.016694737	0.000441339	0.017136
7446041452	574460	4145200	0.019753729	0.000449452	0.020203
7447041452	574470	4145200	0.023330738	0.000443511	0.023774
7448041452	574480	4145200	0.026990317	0.000426398	0.027417
7449041452	574490	4145200	0.029908506	0.000403924	0.030312
7450041452	574500	4145200	0.031111852	0.000385088	0.031497
7451041452	574510	4145200	0.032352136	0.000400597	0.032753
7443041452	574430	4145210	0.028396176	0.000377607	0.028774
7444041452	574440	4145210	0.024121669	0.000322726	0.024444
7445041452	574450	4145210	0.002886465	0.000390694	0.003277
7446041452	574460	4145210	0.003126352	0.000347347	0.003474
7447041452	574470	4145210	0.003441421	0.000356476	0.003798
7448041452	574480	4145210	0.003839059	0.00037262	0.004212
7449041452	574490	4145210	0.041284012	0.000409681	0.041694
7450041452	574500	4145210	0.031336094	0.000356009	0.031692
7451041452	574510	4145210	0.002909063	0.00041476	0.003324
7443041452	574430	4145220	0.003156772	0.000372807	0.00353
7444041452	574440	4145220	0.003491397	0.000386161	0.003878
7445041452	574450	4145220	0.056081817	0.000435297	0.056517
7446041452	574460	4145220	0.04317399	0.000397922	0.043572
7447041452	574470	4145220	0.002901241	0.000406906	0.003308
7448041452	574480	4145220	0.003180674	0.000405144	0.003586

Max GLC for Chronic Calcs

Max GLC: 0.051036

XY	X	Y	2025	2026	2027	2034	2035
57446041452	574460	4145250	0.0003075	0.0003146	0		
57447041452	574470	4145250	0.0002989	0.0003059	0		
57448041452	574480	4145250	0.000287	0.0002932	0		
57446041452	574460	4145260	0.0002668	0.0002727	0		
57447041452	574470	4145260	5.201E-05	5.971E-05	0		
57448041452	574480	4145260	5.664E-05	6.405E-05	0		
57447041452	574470	4145270	6.174E-05	6.876E-05	0		
57449041451	574490	4145130	6.755E-05	7.466E-05	0		
57448041451	574480	4145140	7.484E-05	8.213E-05	0		
57449041451	574490	4145140	8.4E-05	9.151E-05	0		
57449041451	574490	4145150	9.608E-05	0.0001042	0		
57450041451	574500	4145150	0.000109	0.0001173	0		
57446041451	574460	4145160	0.0001255	0.0001342	0		
57449041451	574490	4145160	0.000145	0.0001538	0		
57450041451	574500	4145160	0.000168	0.0001768	0		
57451041451	574510	4145160	0.0001955	0.0002041	0		
57446041451	574460	4145170	0.0002271	0.0002358	0		
57447041451	574470	4145170	0.0002624	0.0002711	0		
57448041451	574480	4145170	0.0002999	0.0003087	0		
57449041451	574490	4145170	0.0003382	0.0003469	0		
57450041451	574500	4145170	0.0003733	0.000382	0		
57451041451	574510	4145170	0.0004044	0.0004125	0		
57452041451	574520	4145170	0.0004195	0.0004274	0		
57446041451	574460	4145180	0.0004174	0.0004253	0		
57447041451	574470	4145180	0.0004022	0.00041	0		
57448041451	574480	4145180	0.0003707	0.0003775	0		
57449041451	574490	4145180	0.0003419	0.0003485	0		
57450041451	574500	4145180	5.281E-05	6.102E-05	0		
57451041451	574510	4145180	5.776E-05	6.592E-05	0		
57452041451	574520	4145180	6.264E-05	7.005E-05	0		
57453041451	574530	4145180	6.92E-05	7.681E-05	0		
57445041451	574450	4145190	7.71E-05	8.494E-05	0		
57446041451	574460	4145190	8.834E-05	9.709E-05	0		
57447041451	574470	4145190	0.0001005	0.0001097	0		
57448041451	574480	4145190	0.0001151	0.0001245	0		
57449041451	574490	4145190	0.0001332	0.0001428	0		
57450041451	574500	4145190	0.0001555	0.0001652	0		
57451041451	574510	4145190	0.0001829	0.0001927	0		
57452041451	574520	4145190	0.000217	0.0002266	0		
57444041452	574440	4145200	0.0002583	0.0002679	0		
57445041452	574450	4145200	0.0003088	0.0003186	0		
57446041452	574460	4145200	0.0003654	0.0003754	0		
57447041452	574470	4145200	0.0004316	0.0004414	0		
57448041452	574480	4145200	0.0004993	0.0005087	0		
57449041452	574490	4145200	0.0005532	0.0005622	0		
57450041452	574500	4145200	0.0005755	0.0005841	0		
57451041452	574510	4145200	0.0005984	0.0006073	0		
57443041452	574430	4145210	0.0005253	0.0005337	0		
57444041452	574440	4145210	0.0004462	0.0004534	0		
57445041452	574450	4145210	5.339E-05	6.208E-05	0		
57446041452	574460	4145210	5.783E-05	6.555E-05	0		
57447041452	574470	4145210	6.366E-05	7.158E-05	0		
57448041452	574480	4145210	7.101E-05	7.93E-05	0		
57449041452	574490	4145210	0.0007637	0.0007728	0		
57450041452	574500	4145210	0.0005796	0.0005876	0		
57451041452	574510	4145210	5.381E-05	6.303E-05	0		
57443041452	574430	4145220	5.839E-05	6.668E-05	0		
57444041452	574440	4145220	6.458E-05	7.317E-05	0		
57445041452	574450	4145220	0.0010374	0.0010471	0		
57446041452	574460	4145220	0.0007986	0.0008075	0		
57447041452	574470	4145220	5.367E-05	6.271E-05	0		
57448041452	574480	4145220	5.883E-05	6.784E-05	0		

Garvey Reservoir Rehab - Mitigated Junction Structure

Cancer Risk Summary & Maximum Annual GLC for Chronic Calculations

Cancer Risk Summary

Max Risk: 2.758676

XY	X	Y	Offroad Risk	Haul Risk	Total Risk
7449041452	574490	4145220	0.088086725	0.000500257	0.088587
7450041452	574500	4145220	0.060855218	0.000453398	0.061309
7451041452	574510	4145220	0.002906021	0.000438666	0.003345
7452041452	574520	4145220	0.003197188	0.000453264	0.00365
7453041452	574530	4145220	0.18079953	0.000667872	0.181467
7444041452	574440	4145230	0.109982922	0.000624968	0.110608
7445041452	574450	4145230	0.002906456	0.000483747	0.00339
7446041452	574460	4145230	0.003202838	0.000508439	0.003711
7447041452	574470	4145230	0.36203668	0.00089895	0.362936
7448041452	574480	4145230	0.16715944	0.000827902	0.167987
7449041452	574490	4145230	0.002914278	0.000602362	0.003517
7450041452	574500	4145230	0.003186758	0.000554851	0.003742
7451041452	574510	4145230	2.756768795	0.001907114	2.758676
7452041452	574520	4145230	0.554369902	0.001381641	0.555752
7444041452	574440	4145240	0.207138415	0.001042479	0.208181
7445041452	574450	4145240	0.002887334	0.000648957	0.003536
7446041452	574460	4145240	0.003158511	0.000607393	0.003766
7447041452	574470	4145240	0.86598992	0.011304326	0.877294
7448041452	574480	4145240	0.778928798	0.003265247	0.782194
7449041452	574490	4145240	0.429261938	0.001870926	0.431133
7450041452	574500	4145240	0.206604753	0.001288176	0.207893
7451041452	574510	4145240	0.00285083	0.000702376	0.003553
7445041452	574450	4145250	0.003118095	0.000671622	0.00379
7446041452	574460	4145250	0.328315189	0.016467815	0.344783
7447041452	574470	4145250	0.309624872	0.004187698	0.313813
7448041452	574480	4145250	0.233036638	0.002257878	0.235295
7446041452	574460	4145260	0.152784045	0.00153162	0.154316
7447041452	574470	4145260	0.002802157	0.000751844	0.003554
7448041452	574480	4145260	0.003067249	0.000748278	0.003816
7447041452	574470	4145270	0.123008954	0.043626794	0.166636
7457041450	574570	4145030	0.169967681	0.011548684	0.181516
7463041450	574630	4145080	0.191913855	0.005089894	0.197004
7461041450	574610	4145090	0.17043659	0.002805992	0.173243
7462041450	574620	4145090	0.127140919	0.001820667	0.128962
7463041450	574630	4145090	0.002753484	0.00085192	0.003605
7464041450	574640	4145090	0.003007712	0.000845564	0.003853
7460041451	574600	4145100	0.003316262	0.000901374	0.004218
7461041451	574610	4145100	0.059180356	0.035443855	0.094624
7462041451	574620	4145100	0.08086274	0.026129281	0.106992
7463041451	574630	4145100	0.103299117	0.009624535	0.112924
7464041451	574640	4145100	0.115896656	0.005060636	0.120957
7465041451	574650	4145100	0.111538276	0.00304326	0.114582
7459041451	574590	4145110	0.094709255	0.002021859	0.096731
7460041451	574600	4145110	0.002693078	0.000946702	0.00364
7461041451	574610	4145110	0.002937745	0.00096364	0.003901
7462041451	574620	4145110	0.003229347	0.001010023	0.004239
7463041451	574630	4145110	0.033860121	0.008520632	0.042381
7464041451	574640	4145110	0.044182645	0.033748617	0.077931
7465041451	574650	4145110	0.056746286	0.026137997	0.082884
7466041451	574660	4145110	0.069132619	0.009265069	0.078398
7460041451	574600	4145120	0.076703397	0.005069193	0.081773
7461041451	574610	4145120	0.076478286	0.003205485	0.079684
7462041451	574620	4145120	0.069166082	0.002201757	0.071368
7463041451	574630	4145120	0.002631803	0.001074463	0.003706
7464041451	574640	4145120	0.00286126	0.001106494	0.003968
7465041451	574650	4145120	0.00313374	0.001146382	0.00428
7466041451	574660	4145120	0.021410339	0.004590349	0.026001
7460041451	574600	4145130	0.027204129	0.008938642	0.036143
7462041451	574620	4145130	0.034025695	0.033915546	0.067941
7463041451	574630	4145130	0.041727281	0.025519717	0.067247
7464041451	574640	4145130	0.049290671	0.008564326	0.057855
7465041451	574650	4145130	0.054629023	0.00468651	0.059316

Max GLC for Chronic Calcs

Max GLC: 0.051036

XY	X	Y	2025	2026	2027	2034	2035
57449041452	574490	4145220	0.0016294	0.0016405	0		
57450041452	574500	4145220	0.0011257	0.0011358	0		
57451041452	574510	4145220	5.375E-05	6.351E-05	0		
57452041452	574520	4145220	5.914E-05	6.922E-05	0		
57453041452	574530	4145220	0.0033443	0.0033592	0		
57444041452	574440	4145230	0.0020344	0.0020483	0		
57445041452	574450	4145230	5.376E-05	6.452E-05	0		
57446041452	574460	4145230	5.924E-05	7.055E-05	0		
57447041452	574470	4145230	0.0066968	0.0067168	0		
57448041452	574480	4145230	0.003092	0.0031105	0		
57449041452	574490	4145230	5.391E-05	6.73E-05	0		
57450041452	574500	4145230	5.895E-05	7.129E-05	0		
57451041452	574510	4145230	0.0509935	0.0510359	0		
57452041452	574520	4145230	0.0102545	0.0102852	0		
57444041452	574440	4145240	0.0038316	0.0038547	0		
57445041452	574450	4145240	5.341E-05	6.784E-05	0		
57446041452	574460	4145240	5.842E-05	7.193E-05	0		
57447041452	574470	4145240	0.0160187	0.0162701	0		
57448041452	574480	4145240	0.0144083	0.0144809	0		
57449041452	574490	4145240	0.0079403	0.0079819	0		
57450041452	574500	4145240	0.0038217	0.0038503	0		
57451041452	574510	4145240	5.273E-05	6.835E-05	0		
57445041452	574450	4145250	5.768E-05	7.261E-05	0		
57446041452	574460	4145250	0.006073	0.0064392	0		
57447041452	574470	4145250	0.0057273	0.0058204	0		
57448041452	574480	4145250	0.0043106	0.0043608	0		
57446041452	574460	4145260	0.0028261	0.0028602	0		
57447041452	574470	4145260	5.183E-05	6.855E-05	0		
57448041452	574480	4145260	5.674E-05	7.338E-05	0		
57447041452	574470	4145270	0.0022754	0.0032455	0		
57457041450	574570	4145030	0.003144	0.0034008	0		
57463041450	574630	4145080	0.0035499	0.0036631	0		
57461041450	574610	4145090	0.0031527	0.0032151	0		
57462041450	574620	4145090	0.0023518	0.0023923	0		
57463041450	574630	4145090	5.093E-05	6.988E-05	0		
57464041450	574640	4145090	5.564E-05	7.444E-05	0		
57460041451	574600	4145100	6.134E-05	8.139E-05	0		
57461041451	574610	4145100	0.0010947	0.0018829	0		
57462041451	574620	4145100	0.0014958	0.0020768	0		
57463041451	574630	4145100	0.0019108	0.0021248	0		
57464041451	574640	4145100	0.0021438	0.0022563	0		
57465041451	574650	4145100	0.0020632	0.0021309	0		
57459041451	574590	4145110	0.0017519	0.0017968	0		
57460041451	574600	4145110	4.982E-05	7.087E-05	0		
57461041451	574610	4145110	5.434E-05	7.577E-05	0		
57462041451	574620	4145110	5.974E-05	8.219E-05	0		
57463041451	574630	4145110	0.0006263	0.0008158	0		
57464041451	574640	4145110	0.0008173	0.0015677	0		
57465041451	574650	4145110	0.0010497	0.0016309	0		
57466041451	574660	4145110	0.0012788	0.0014848	0		
57460041451	574600	4145120	0.0014188	0.0015315	0		
57461041451	574610	4145120	0.0014147	0.0014859	0		
57462041451	574620	4145120	0.0012794	0.0013284	0		
57463041451	574630	4145120	4.868E-05	7.257E-05	0		
57464041451	574640	4145120	5.293E-05	7.753E-05	0		
57465041451	574650	4145120	5.797E-05	8.346E-05	0		
57466041451	574660	4145120	0.000396	0.0004981	0		
57460041451	574600	4145130	0.0005032	0.000702	0		
57462041451	574620	4145130	0.0006294	0.0013836	0		
57463041451	574630	4145130	0.0007719	0.0013393	0		
57464041451	574640	4145130	0.0009118	0.0011022	0		
57465041451	574650	4145130	0.0010105	0.0011147	0		

Garvey Reservoir Rehab - Mitigated Junction Structure

Cancer Risk Summary & Maximum Annual GLC for Chronic Calculations

Cancer Risk Summary

Max Risk: 2.758676

XY	X	Y	Offroad Risk	Haul Risk	Total Risk
7463041451	574630	4145140	0.055350422	0.003318613	0.058669
7464041451	574640	4145140	0.052064146	0.002330594	0.054395
7459041451	574590	4145150	0.002559663	0.001225582	0.003785
7460041451	574600	4145150	0.002776951	0.001277919	0.004055
7460041451	574600	4145160	0.003033352	0.001327614	0.004361
7461041451	574610	4145160	0.012188601	0.00261456	0.014803
7461041451	574610	4145170	0.014641792	0.003321588	0.017963
7457041450	574570	4145030	0.017902863	0.004803918	0.022707
7463041450	574630	4145080	0.022085673	0.008886722	0.030972
7461041450	574610	4145090	0.026883411	0.03329746	0.060181
7462041450	574620	4145090	0.031707223	0.022024688	0.053732
7463041450	574630	4145090	0.036715296	0.00843621	0.045152
7464041450	574640	4145090	0.04030317	0.004656366	0.04496
7460041451	574600	4145100	0.040400081	0.002902144	0.043302
7461041451	574610	4145100	0.039622186	0.002102442	0.041725
7462041451	574620	4145100	0.002484481	0.001425277	0.00391
7463041451	574630	4145100	0.002690036	0.001502976	0.004193
7464041451	574640	4145100	0.002926446	0.001553074	0.00448
7465041451	574650	4145100	0.003170679	0.001494669	0.004665
7459041451	574590	4145110	0.009220435	0.00247321	0.011694
7460041451	574600	4145110	0.010804036	0.00289395	0.013698
7461041451	574610	4145110	0.012746598	0.003636245	0.016383
7462041451	574620	4145110	0.015231948	0.005191894	0.020424
7463041451	574630	4145110	0.018198375	0.009105967	0.027304
7464041451	574640	4145110	0.021712371	0.030330756	0.052043
7465041451	574650	4145110	0.025101642	0.021240256	0.046342
7466041451	574660	4145110	0.028484829	0.008496979	0.036982
7460041451	574600	4145120	0.030252691	0.004550855	0.034804
7461041451	574610	4145120	0.031101856	0.002935564	0.034037
7462041451	574620	4145120	0.030671624	0.002090431	0.032762
7463041451	574630	4145120	0.002389743	0.001663302	0.004053
7464041451	574640	4145120	0.002598775	0.001804917	0.004404
7465041451	574650	4145120	0.002808676	0.001798469	0.004607
7466041451	574660	4145120	0.003024661	0.001735165	0.00476
7460041451	574600	4145130	0.003189366	0.001715386	0.004905
7462041451	574620	4145130	0.005046316	0.002113472	0.00716
7463041451	574630	4145130	0.005672977	0.002240246	0.007913
7464041451	574640	4145130	0.006388292	0.002433325	0.008822
7465041451	574650	4145130	0.007303078	0.00261212	0.009915
7463041451	574630	4145140	0.008382135	0.002873552	0.011256
7464041451	574640	4145140	0.009627634	0.003264295	0.012892
7459041451	574590	4145150	0.011233399	0.00410067	0.015334
7460041451	574600	4145150	0.013115555	0.00581252	0.018928
7460041451	574600	4145160	0.015267149	0.010166035	0.025433
7461041451	574610	4145160	0.017704261	0.032396887	0.050101
7461041451	574610	4145170	0.020374306	0.021093949	0.041468
7457041450	574570	4145030	0.022723198	0.008495022	0.031218
7463041450	574630	4145080	0.023760535	0.004417956	0.028178
7461041450	574610	4145090	0.024489757	0.00291437	0.027404
7462041450	574620	4145090	0.02449106	0.002108023	0.026599
7463041450	574630	4145090	0.002208524	0.002004847	0.004213
7464041450	574640	4145090	0.002504906	0.002270204	0.004775
7460041451	574600	4145100	0.002596167	0.002133336	0.00473
7461041451	574610	4145100	0.002897764	0.002146248	0.005044
7462041451	574620	4145100	0.003168941	0.002184562	0.005354
7463041451	574630	4145100	0.003489659	0.00223015	0.00572
7464041451	574640	4145100	0.003845578	0.002298971	0.006145
7465041451	574650	4145100	0.004246259	0.00242367	0.00667
7459041451	574590	4145110	0.004715168	0.002543423	0.007259
7460041451	574600	4145110	0.005257955	0.002727207	0.007985
7461041451	574610	4145110	0.005892004	0.002934086	0.008826
7462041451	574620	4145110	0.006663814	0.003116438	0.00978

Max GLC for Chronic Calcs

Max GLC: 0.051036

XY	X	Y	2025	2026	2027	2034	2035
57463041451	574630	4145140	0.0010238	0.0010976	0		
57464041451	574640	4145140	0.0009631	0.0010149	0		
57459041451	574590	4145150	4.735E-05	7.46E-05	0		
57460041451	574600	4145150	5.137E-05	7.978E-05	0		
57460041451	574600	4145160	5.611E-05	8.563E-05	0		
57461041451	574610	4145160	0.0002255	0.0002836	0		
57461041451	574610	4145170	0.0002708	0.0003447	0		
57457041450	574570	4145030	0.0003312	0.000438	0		
57463041450	574630	4145080	0.0004085	0.0006061	0		
57461041450	574610	4145090	0.0004973	0.0012377	0		
57462041450	574620	4145090	0.0005865	0.0010763	0		
57463041450	574630	4145090	0.0006791	0.0008667	0		
57464041450	574640	4145090	0.0007455	0.0008491	0		
57460041451	574600	4145100	0.0007473	0.0008118	0		
57461041451	574610	4145100	0.0007329	0.0007797	0		
57462041451	574620	4145100	4.596E-05	7.765E-05	0		
57463041451	574630	4145100	4.976E-05	8.318E-05	0		
57464041451	574640	4145100	5.413E-05	8.867E-05	0		
57465041451	574650	4145100	5.865E-05	9.189E-05	0		
57459041451	574590	4145110	0.0001706	0.0002256	0		
57460041451	574600	4145110	0.0001998	0.0002642	0		
57461041451	574610	4145110	0.0002358	0.0003166	0		
57462041451	574620	4145110	0.0002818	0.0003972	0		
57463041451	574630	4145110	0.0003366	0.0005391	0		
57464041451	574640	4145110	0.0004016	0.0010761	0		
57465041451	574650	4145110	0.0004643	0.0009366	0		
57466041451	574660	4145110	0.0005269	0.0007158	0		
57460041451	574600	4145120	0.0005596	0.0006608	0		
57461041451	574610	4145120	0.0005753	0.0006406	0		
57462041451	574620	4145120	0.0005673	0.0006138	0		
57463041451	574630	4145120	4.42E-05	8.119E-05	0		
57464041451	574640	4145120	4.807E-05	8.821E-05	0		
57465041451	574650	4145120	5.195E-05	9.195E-05	0		
57466041451	574660	4145120	5.595E-05	9.453E-05	0		
57460041451	574600	4145130	5.9E-05	9.714E-05	0		
57462041451	574620	4145130	9.334E-05	0.0001403	0		
57463041451	574630	4145130	0.0001049	0.0001548	0		
57464041451	574640	4145130	0.0001182	0.0001723	0		
57465041451	574650	4145130	0.0001351	0.0001932	0		
57463041451	574630	4145140	0.000155	0.0002189	0		
57464041451	574640	4145140	0.0001781	0.0002507	0		
57459041451	574590	4145150	0.0002078	0.000299	0		
57460041451	574600	4145150	0.0002426	0.0003719	0		
57460041451	574600	4145160	0.0002824	0.0005085	0		
57461041451	574610	4145160	0.0003275	0.0010479	0		
57461041451	574610	4145170	0.0003769	0.0008459	0		
57457041450	574570	4145030	0.0004203	0.0006092	0		
57463041450	574630	4145080	0.0004395	0.0005378	0		
57461041450	574610	4145090	0.000453	0.0005178	0		
57462041450	574620	4145090	0.000453	0.0004999	0		
57463041450	574630	4145090	4.085E-05	8.543E-05	0		
57464041450	574640	4145090	4.633E-05	9.682E-05	0		
57460041451	574600	4145100	4.802E-05	9.546E-05	0		
57461041451	574610	4145100	5.36E-05	0.0001013	0		
57462041451	574620	4145100	5.862E-05	0.0001072	0		
57463041451	574630	4145100	6.455E-05	0.0001141	0		
57464041451	574640	4145100	7.113E-05	0.0001223	0		
57465041451	574650	4145100	7.855E-05	0.0001324	0		
57459041451	574590	4145110	8.722E-05	0.0001438	0		
57460041451	574600	4145110	9.726E-05	0.0001579	0		
57461041451	574610	4145110	0.000109	0.0001742	0		
57462041451	574620	4145110	0.0001233	0.0001926	0		

Garvey Reservoir Rehab - Mitigated Junction Structure

Cancer Risk Summary & Maximum Annual GLC for Chronic Calculations

Cancer Risk Summary

Max Risk: 2.758676

XY	X	Y	Offroad Risk	Haul Risk	Total Risk
7463041451	574630	4145110	0.007561217	0.003362334	0.010924
7464041451	574640	4145110	0.008573349	0.003731417	0.012305
7465041451	574650	4145110	0.009686737	0.004486774	0.014174
7466041451	574660	4145110	0.011286852	0.006564003	0.017851
7460041451	574600	4145120	0.012964756	0.012936197	0.025901
7461041451	574610	4145120	0.014839524	0.045061666	0.059901
7462041451	574620	4145120	0.016789475	0.01900102	0.03579
7463041451	574630	4145120	0.018524743	0.0083716	0.026896
7464041451	574640	4145120	0.019909742	0.004879807	0.02479
7465041451	574650	4145120	0.01980892	0.002896732	0.022706
7466041451	574660	4145120	0.020020125	0.002128574	0.022149
7460041451	574600	4145130	0.002090319	0.002584194	0.004675
7462041451	574620	4145130	0.002411037	0.003065465	0.005477
7463041451	574630	4145130	0.002596602	0.003181715	0.005778
7464041451	574640	4145130	0.002808676	0.003127143	0.005936
7465041451	574650	4145130	0.003045086	0.003163906	0.006209
7463041451	574630	4145140	0.003316697	0.003142778	0.006459
7464041451	574640	4145140	0.003622205	0.003195161	0.006817
7459041451	574590	4145150	0.003975082	0.00324106	0.007216
7460041451	574600	4145150	0.004383151	0.003416486	0.0078
7460041451	574600	4145160	0.004863794	0.003598488	0.008462
7461041451	574610	4145160	0.005414403	0.003753873	0.009168
7461041451	574610	4145170	0.006058013	0.003914099	0.009972
7457041450	574570	4145030	0.006813309	0.004137611	0.010951
7463041450	574630	4145080	0.007699848	0.004538598	0.012238
7461041450	574610	4145090	0.008568568	0.005300093	0.013869
7462041450	574620	4145090	0.009810157	0.007390795	0.017201
7463041450	574630	4145090	0.011165605	0.0167605	0.027926
7464041450	574640	4145090	0.012575375	0.046036635	0.058612
7460041451	574600	4145100	0.014035121	0.015407833	0.029443
7461041451	574610	4145100	0.015380139	0.007800234	0.02318
7462041451	574620	4145100	0.016459196	0.004872458	0.021332
7463041451	574630	4145100	0.017153216	0.003325186	0.020478
7464041451	574640	4145100	0.017376589	0.002413369	0.01979
7465041451	574650	4145100	0	0	0
7459041451	574590	4145110	0	0	0
7460041451	574600	4145110	0	0	0
7461041451	574610	4145110	0	0	0
7462041451	574620	4145110	0	0	0
7463041451	574630	4145110	0	0	0
7464041451	574640	4145110	0	0	0
7465041451	574650	4145110	0	0	0
7466041451	574660	4145110	0	0	0
7460041451	574600	4145120	0	0	0
7461041451	574610	4145120	0	0	0
7462041451	574620	4145120	0	0	0
7463041451	574630	4145120	0	0	0
7464041451	574640	4145120	0	0	0
7465041451	574650	4145120	0	0	0
7466041451	574660	4145120	0	0	0
7460041451	574600	4145130	0	0	0
7462041451	574620	4145130	0	0	0
7463041451	574630	4145130	0	0	0
7464041451	574640	4145130	0	0	0
7465041451	574650	4145130	0	0	0
7463041451	574630	4145140	0	0	0
7464041451	574640	4145140	0	0	0
7459041451	574590	4145150	0	0	0
7460041451	574600	4145150	0	0	0
7460041451	574600	4145160	0	0	0
7461041451	574610	4145160	0	0	0
7461041451	574610	4145170	0	0	0

Max GLC for Chronic Calcs

Max GLC: 0.051036

XY	X	Y	2025	2026	2027	2034	2035
57463041451	574630	4145110	0.0001399	0.0002146	0		
57464041451	574640	4145110	0.0001586	0.0002416	0		
57465041451	574650	4145110	0.0001792	0.000279	0		
57466041451	574660	4145110	0.0002088	0.0003547	0		
57460041451	574600	4145120	0.0002398	0.0005275	0		
57461041451	574610	4145120	0.0002745	0.0012765	0		
57462041451	574620	4145120	0.0003106	0.0007331	0		
57463041451	574630	4145120	0.0003427	0.0005288	0		
57464041451	574640	4145120	0.0003683	0.0004768	0		
57465041451	574650	4145120	0.0003664	0.0004308	0		
57466041451	574660	4145120	0.0003703	0.0004177	0		
57460041451	574600	4145130	3.867E-05	9.613E-05	0		
57462041451	574620	4145130	4.46E-05	0.0001128	0		
57463041451	574630	4145130	4.803E-05	0.0001188	0		
57464041451	574640	4145130	5.195E-05	0.0001215	0		
57465041451	574650	4145130	5.633E-05	0.0001267	0		
57463041451	574630	4145140	6.135E-05	0.0001312	0		
57464041451	574640	4145140	6.7E-05	0.0001381	0		
57459041451	574590	4145150	7.353E-05	0.0001456	0		
57460041451	574600	4145150	8.108E-05	0.000157	0		
57460041451	574600	4145160	8.997E-05	0.00017	0		
57461041451	574610	4145160	0.0001002	0.0001836	0		
57461041451	574610	4145170	0.0001121	0.0001991	0		
57457041450	574570	4145030	0.000126	0.000218	0		
57463041450	574630	4145080	0.0001424	0.0002434	0		
57461041450	574610	4145090	0.0001585	0.0002764	0		
57462041450	574620	4145090	0.0001815	0.0003458	0		
57463041450	574630	4145090	0.0002065	0.0005792	0		
57464041450	574640	4145090	0.0002326	0.0012563	0		
57460041451	574600	4145100	0.0002596	0.0006022	0		
57461041451	574610	4145100	0.0002845	0.0004579	0		
57462041451	574620	4145100	0.0003045	0.0004128	0		
57463041451	574630	4145100	0.0003173	0.0003912	0		
57464041451	574640	4145100	0.0003214	0.0003751	0		
57465041451	574650	4145100	0	0	0		
57459041451	574590	4145110	0	0	0		
57460041451	574600	4145110	0	0	0		
57461041451	574610	4145110	0	0	0		
57462041451	574620	4145110	0	0	0		
57463041451	574630	4145110	0	0	0		
57464041451	574640	4145110	0	0	0		
57465041451	574650	4145110	0	0	0		
57466041451	574660	4145110	0	0	0		
57460041451	574600	4145120	0	0	0		
57461041451	574610	4145120	0	0	0		
57462041451	574620	4145120	0	0	0		
57463041451	574630	4145120	0	0	0		
57464041451	574640	4145120	0	0	0		
57465041451	574650	4145120	0	0	0		
57466041451	574660	4145120	0	0	0		
57460041451	574600	4145130	0	0	0		
57462041451	574620	4145130	0	0	0		
57463041451	574630	4145130	0	0	0		
57464041451	574640	4145130	0	0	0		
57465041451	574650	4145130	0	0	0		
57463041451	574630	4145140	0	0	0		
57464041451	574640	4145140	0	0	0		
57459041451	574590	4145150	0	0	0		
57460041451	574600	4145150	0	0	0		
57460041451	574600	4145160	0	0	0		
57461041451	574610	4145160	0	0	0		
57461041451	574610	4145170	0	0	0		

Garvey Reservoir Rehab - Mitigated Junction Structure

Construction Modeling Assumptions

AERMOD Sources

Volume Sources		
Offroad Construction Exhaust		
Release Height	3.66	m
Emissions rate	1	g/s
Init Vert Dimension	3.4	m
Line Volume		
Onroad Hauling Exhaust		
Plume Height	7.315	m
Plume Width	20	m
Release Height	3.66	m
Emissions rate	1	g/s

Meteorology:

SCAQMD	Pico	Rivera	2010 - 2012, 2015 - 2016

SCAQMD Met Data

https://www.aqmd.gov/home/air-quality/meteorological-data/data-for-aermod

AERMOD Sources

Garvey Reservoir Rehab - Mitigated Junction Structure

Health Risk Assessment Risk Factors

Residential Risk	Abbreviation	UOM	3rd Trimester	0<2	2<16	16<30
Daily Breathing Rate (95th %'ile)	DBR	L/kg-day	361	1090	572	261
Fraction Of Time At Home [a]	FAH	unitless	1	1	1	0.73
Exposure Frequency	EF	days/year	0.96	0.96	0.96	0.96
Age Sensitivity Factor	ASF	unitless	10	10	3	1
Inhalation Absorption Factor	A	unitless	1	1	1	1
Conversion Factor	CF_1	m^3/L	0.001	0.001	0.001	0.001
Conversion Factor	CF_2	$\mu g/m^3$	0.001	0.001	0.001	0.001
Cancer Potency Factor (diesel exhaust)	CPF	$mg/kg\text{-}day^{-1}$	1.1	1.1	1.1	1.1
Averaging Time (for residential exposure)	AT	years	70.00	70.00	70.00	70.00

[a] assume school or daycare will have cancer risk of >1 per million

Garvey Reservoir Rehab - Mitigated Junction Structure

Health Risk Assessment Exposure Duration Assumptions for Offroad Equipment

Residential Receptors

			Start Date	*11/1/2025*	*1/31/2026*
			End Date	*1/30/2026*	*1/31/2028*
	11/1/2025	*4/30/2026*	*Days*	*90*	*730*
Phase	Start Date	End Date	Duration (days)	3rd Tri	0<2
Demolition - 2025			1	0	0
Demolition - 2026			1	0	0
Site Preparation - 2025			1	0	0
Site Preparation - 2026			1	0	0
Grading - 2025			1	0	0
Grading - 2026			1	0	0
Infrastructure - 2025	11/1/2025	12/31/2025	61	61	0
Infrastructure - 2026	1/1/2026	4/30/2026	120	30	90
Paving - 2025			1	0	0
Architectural Coating - 2026			1	0	0

			Intake Factor for Inhalation, IF (m^3/kg-day)			Risk Calculation Part 1, R1		
Phase	Year	Year	Equation	3rd Trimester	0<2	Equation	3rd Trimester	0<2
Demolition - 2025		1900		0	0		0	0
Demolition - 2026		1900	$\frac{DBR \cdot FAH \cdot EF \cdot ED \cdot ASF \cdot A \cdot CF_1}{AT}$	0	0		0	0
Site Preparation - 2025		1900		0	0		0	0
Site Preparation - 2026		1900		0	0		0	0
Grading - 2025		1900		0	0	$IF \cdot CPF \cdot CF_2$	0	0
Grading - 2026		1900		0	0		0	0
Infrastructure - 2025		2025		0.00826459	0		9.09105E-06	0
Infrastructure - 2026		2026		0.004064552	0.036817414		4.47101E-06	4.04992E-05
Paving - 2025		1900		0	0		0	0
Architectural Coating - 2026		1900		0	0		0	0

Exposure Durations

Garvey Reservoir Rehab - Mitigated Junction Structure

Offroad DPM Emissions, Ground Level Concentrations and Health Risk Calculations

Residential Receptors

Phase	Year	Emissions (lbs/day)	Work Hours Per Day	Emissions (g/s)
Demolition - 2025	1900		10	0
Demolition - 2026	1900		10	0
Site Preparation - 2025	1900		10	0
Site Preparation - 2026	1900		10	0
Grading - 2025	1900		10	0
Grading - 2026	1900		10	0
Infrastructure - 2025	2025	0.064	10	0.000803862
Infrastructure - 2026	2026	0.064	10	0.000803862
Paving - 2025	1900		10	0
Architectural Coating - 2026	1900		10	0

		AERMOD Column Identifier:	*4*	*4*	*4*	*4*	*4*	*4*	*4*	*4*	*4*	*4*				
Garvey Reservoir Rehab - Mitigated Junction Structure			Demolition - 2025	Demolition - 2026	ite Preparation - 202	ite Preparation - 202	Grading - 2025	Grading - 2026	nfrastructure - 202	nfrastructure - 2026	Paving - 2025	itectural Coating - 2	Child Risk			
Unique Identifier	X (UTM)	Y (UTM)	1900	1900	1900	1900	1900	1900	2025	2026	1900	1900	3rd Trimester	0<2	Total	per million
396166.283767377.2	396166.28	3767377	0	0	0	0	0	0	3.03619E-05	3.03619E-05	0	0	4.1177E-10	1.22963E-09	1.6414E-09	0.0016414
396266.283767377.2	396266.28	3767377	0	0	0	0	0	0	3.35371E-05	3.35371E-05	0	0	4.54833E-10	1.35823E-09	1.81306E-09	0.0018131
396366.283767377.2	396366.28	3767377	0	0	0	0	0	0	3.8288E-05	3.8288E-05	0	0	5.19263E-10	1.55063E-09	2.06989E-09	0.0020699
396466.283767377.2	396466.28	3767377	0	0	0	0	0	0	4.32799E-05	4.32799E-05	0	0	5.86965E-10	1.7528E-09	2.33977E-09	0.0023398
396566.283767377.2	396566.28	3767377	0	0	0	0	0	0	4.94858E-05	4.94858E-05	0	0	6.71129E-10	2.00413E-09	2.67526E-09	0.0026753
396666.283767377.2	396666.28	3767377	0	0	0	0	0	0	5.51128E-05	5.51128E-05	0	0	7.47443E-10	2.23202E-09	2.97946E-09	0.0029795
396766.283767377.2	396766.28	3767377	0	0	0	0	0	0	6.02414E-05	6.02414E-05	0	0	8.16998E-10	2.43973E-09	3.25673E-09	0.0032567
396866.283767377.2	396866.28	3767377	0	0	0	0	0	0	6.59006E-05	6.59006E-05	0	0	8.93748E-10	2.66892E-09	3.56267E-09	0.0035627
396966.283767377.2	396966.28	3767377	0	0	0	0	0	0	7.2854E-05	7.2854E-05	0	0	9.88051E-10	2.95053E-09	3.93858E-09	0.0039386
397066.283767377.2	397066.28	3767377	0	0	0	0	0	0	7.76531E-05	7.76531E-05	0	0	1.05314E-09	3.14488E-09	4.19802E-09	0.004198
397166.283767377.2	397166.28	3767377	0	0	0	0	0	0	7.94136E-05	7.94136E-05	0	0	1.07701E-09	3.21618E-09	4.29319E-09	0.0042932
397266.283767377.2	397266.28	3767377	0	0	0	0	0	0	7.86499E-05	7.86499E-05	0	0	1.06665E-09	3.18525E-09	4.25191E-09	0.0042519
397366.283767377.2	397366.28	3767377	0	0	0	0	0	0	7.90277E-05	7.90277E-05	0	0	1.07178E-09	3.20056E-09	4.27233E-09	0.0042723
397466.283767377.2	397466.28	3767377	0	0	0	0	0	0	7.78621E-05	7.78621E-05	0	0	1.05597E-09	3.15335E-09	4.20932E-09	0.0042093
397566.283767377.2	397566.28	3767377	0	0	0	0	0	0	7.4293E-05	7.4293E-05	0	0	1.00757E-09	3.0088E-09	4.01637E-09	0.0040164
397666.283767377.2	397666.28	3767377	0	0	0	0	0	0	6.94939E-05	6.94939E-05	0	0	9.4248E-10	2.81444E-09	3.75692E-09	0.0037569
397766.283767377.2	397766.28	3767377	0	0	0	0	0	0	6.25244E-05	6.25244E-05	0	0	8.4796E-10	2.53219E-09	3.38015E-09	0.0033801
397866.283767377.2	397866.28	3767377	0	0	0	0	0	0	5.63909E-05	5.63909E-05	0	0	7.64777E-10	2.28379E-09	3.04856E-09	0.0030486
396166.283767477.2	396166.28	3767477	0	0	0	0	0	0	3.19696E-05	3.19696E-05	0	0	4.33574E-10	1.29474E-09	1.72832E-09	0.0017283
396266.283767477.2	396266.28	3767477	0	0	0	0	0	0	3.5177E-05	3.5177E-05	0	0	4.77073E-10	1.42464E-09	1.90171E-09	0.0019017
396366.283767477.2	396366.28	3767477	0	0	0	0	0	0	4.07799E-05	4.07799E-05	0	0	5.5306E-10	1.65155E-09	2.20461E-09	0.0022046
396466.283767477.2	396466.28	3767477	0	0	0	0	0	0	4.69858E-05	4.69858E-05	0	0	6.37223E-10	1.90288E-09	2.54011E-09	0.0025401
396566.283767477.2	396566.28	3767477	0	0	0	0	0	0	5.4116E-05	5.4116E-05	0	0	7.33924E-10	2.19165E-09	2.92558E-09	0.0029256
396666.283767477.2	396666.28	3767477	0	0	0	0	0	0	6.17768E-05	6.17768E-05	0	0	8.37821E-10	2.50191E-09	3.33973E-09	0.0033397
396766.283767477.2	396766.28	3767477	0	0	0	0	0	0	7.01209E-05	7.01209E-05	0	0	9.50984E-10	2.83984E-09	3.79082E-09	0.0037908
396866.283767477.2	396866.28	3767477	0	0	0	0	0	0	7.93332E-05	7.93332E-05	0	0	1.07592E-09	3.21293E-09	4.28885E-09	0.0042888
396966.283767477.2	396966.28	3767477	0	0	0	0	0	0	9.05149E-05	9.05149E-05	0	0	1.22757E-09	3.66578E-09	4.89334E-09	0.0048933
397066.283767477.2	397066.28	3767477	0	0	0	0	0	0	9.96387E-05	9.96387E-05	0	0	1.35131E-09	4.03528E-09	5.38659E-09	0.0053866
397166.283767477.2	397166.28	3767477	0	0	0	0	0	0	0.000104478	0.000104478	0	0	1.41694E-09	4.23127E-09	5.64821E-09	0.0056482
397266.283767477.2	397266.28	3767477	0	0	0	0	0	0	0.000104976	0.000104976	0	0	1.4237E-09	4.25145E-09	5.67515E-09	0.0056752
397366.283767477.2	397366.28	3767477	0	0	0	0	0	0	0.000104221	0.000104221	0	0	1.41345E-09	4.22085E-09	5.6343E-09	0.0056343
397466.283767477.2	397466.28	3767477	0	0	0	0	0	0	0.000102444	0.000102444	0	0	1.38935E-09	4.1489E-09	5.53826E-09	0.0055383
397566.283767477.2	397566.28	3767477	0	0	0	0	0	0	9.66162E-05	9.66162E-05	0	0	1.31031E-09	3.91287E-09	5.22319E-09	0.0052232
397666.283767477.2	397666.28	3767477	0	0	0	0	0	0	8.83203E-05	8.83203E-05	0	0	1.19781E-09	3.5769E-09	4.77471E-09	0.0047747
397766.283767477.2	397766.28	3767477	0	0	0	0	0	0	7.88428E-05	7.88428E-05	0	0	1.06927E-09	3.19307E-09	4.26234E-09	0.0042623
397866.283767477.2	397866.28	3767477	0	0	0	0	0	0	6.93331E-05	6.93331E-05	0	0	9.403E-10	2.80793E-09	3.74823E-09	0.0037482
396166.283767577.2	396166.28	3767577	0	0	0	0	0	0	3.29503E-05	3.29503E-05	0	0	4.46874E-10	1.33446E-09	1.78133E-09	0.0017813
396266.283767577.2	396266.28	3767577	0	0	0	0	0	0	3.69214E-05	3.69214E-05	0	0	5.0073E-10	1.49529E-09	1.99602E-09	0.001996
396366.283767577.2	396366.28	3767577	0	0	0	0	0	0	4.25967E-05	4.25967E-05	0	0	5.77698E-10	1.72513E-09	2.30283E-09	0.0023028
396466.283767577.2	396466.28	3767577	0	0	0	0	0	0	4.99118E-05	4.99118E-05	0	0	6.76907E-10	2.02139E-09	2.69829E-09	0.0026983
396566.283767577.2	396566.28	3767577	0	0	0	0	0	0	5.90035E-05	5.90035E-05	0	0	8.00209E-10	2.38959E-09	3.1898E-09	0.0031898

Garvey Reservoir Rehab - Mitigated Junction Structure			Demolition - 2025	Demolition - 2026	ite Preparation - 202	te Preparation - 202	Grading - 2025	Grading - 2026	nfrastructure - 202	nfrastructure - 202	Paving - 2025	itectural Coating -	Child Risk			
Unique Identifier	X (UTM)	Y (UTM)	1900	1900	1900	1900	1900	1900	2025	2026	1900	1900	3rd Trimester	0<2	Total	per million
396666.283767577.2	396666.28	3767577	0	0	0	0	0	0	6.99682E-05	6.99682E-05	0	0	9.48912E-10	2.83365E-09	3.78256E-09	0.0037826
396766.283767577.2	396766.28	3767577	0	0	0	0	0	0	8.02013E-05	8.02013E-05	0	0	1.0877E-09	3.24809E-09	4.33578E-09	0.0043358
396866.283767577.2	396866.28	3767577	0	0	0	0	0	0	9.61902E-05	9.61902E-05	0	0	1.30454E-09	3.89562E-09	5.20016E-09	0.0052002
396966.283767577.2	396966.28	3767577	0	0	0	0	0	0	0.000113353	0.000113353	0	0	1.53729E-09	4.59069E-09	6.12798E-09	0.006128
397066.283767577.2	397066.28	3767577	0	0	0	0	0	0	0.000130113	0.000130113	0	0	1.7646E-09	5.26947E-09	7.03407E-09	0.0070341
397166.283767577.2	397166.28	3767577	0	0	0	0	0	0	0.000142927	0.000142927	0	0	1.93838E-09	5.78841E-09	7.72679E-09	0.0077268
397266.283767577.2	397266.28	3767577	0	0	0	0	0	0	0.000147452	0.000147452	0	0	1.99976E-09	5.9717E-09	7.97146E-09	0.0079715
397366.283767577.2	397366.28	3767577	0	0	0	0	0	0	0.000146086	0.000146086	0	0	1.98123E-09	5.91636E-09	7.89758E-09	0.0078976
397466.283767577.2	397466.28	3767577	0	0	0	0	0	0	0.000142613	0.000142613	0	0	1.93413E-09	5.77571E-09	7.70984E-09	0.0077098
397566.283767577.2	397566.28	3767577	0	0	0	0	0	0	0.000131415	0.000131415	0	0	1.78226E-09	5.32221E-09	7.10448E-09	0.0071045
397666.283767577.2	397666.28	3767577	0	0	0	0	0	0	0.00011656	0.00011656	0	0	1.58079E-09	4.72058E-09	6.30138E-09	0.0063014
397766.283767577.2	397766.28	3767577	0	0	0	0	0	0	0.000100402	0.000100402	0	0	1.36166E-09	4.06621E-09	5.42788E-09	0.0054279
397866.283767577.2	397866.28	3767577	0	0	0	0	0	0	8.52255E-05	8.52255E-05	0	0	1.15583E-09	3.45156E-09	4.60739E-09	0.0046074
396166.283767677.2	396166.28	3767677	0	0	0	0	0	0	3.4124E-05	3.4124E-05	0	0	4.62791E-10	1.38199E-09	1.84478E-09	0.0018448
396266.283767677.2	396266.28	3767677	0	0	0	0	0	0	3.85452E-05	3.85452E-05	0	0	5.22752E-10	1.56105E-09	2.0838E-09	0.0020838
396366.283767677.2	396366.28	3767677	0	0	0	0	0	0	4.48957E-05	4.48957E-05	0	0	6.08878E-10	1.81824E-09	2.42712E-09	0.0024271
396466.283767677.2	396466.28	3767677	0	0	0	0	0	0	5.32478E-05	5.32478E-05	0	0	7.2215E-10	2.15649E-09	2.87864E-09	0.0028786
396566.283767677.2	396566.28	3767677	0	0	0	0	0	0	6.34649E-05	6.34649E-05	0	0	8.60715E-10	2.57028E-09	3.43099E-09	0.003431
396666.283767677.2	396666.28	3767677	0	0	0	0	0	0	7.48476E-05	7.48476E-05	0	0	1.01509E-09	3.03127E-09	4.04635E-09	0.0040464
396766.283767677.2	396766.28	3767677	0	0	0	0	0	0	9.24522E-05	9.24522E-05	0	0	1.25384E-09	3.74424E-09	4.99808E-09	0.0049981
396866.283767677.2	396866.28	3767677	0	0	0	0	0	0	0.000117203	0.000117203	0	0	1.58952E-09	4.74663E-09	6.33614E-09	0.0063361
396966.283767677.2	396966.28	3767677	0	0	0	0	0	0	0.000147187	0.000147187	0	0	1.99616E-09	5.96096E-09	7.95712E-09	0.0079571
397066.283767677.2	397066.28	3767677	0	0	0	0	0	0	0.000177412	0.000177412	0	0	2.40608E-09	7.18505E-09	9.59113E-09	0.0095911
397166.283767677.2	397166.28	3767677	0	0	0	0	0	0	0.000205475	0.000205475	0	0	2.78667E-09	8.32157E-09	1.11082E-08	0.0111082
397266.283767677.2	397266.28	3767677	0	0	0	0	0	0	0.000225009	0.000225009	0	0	3.05159E-09	9.11268E-09	1.21643E-08	0.0121643
397366.283767677.2	397366.28	3767677	0	0	0	0	0	0	0.000223755	0.000223755	0	0	3.03458E-09	9.06189E-09	1.20965E-08	0.0120965
397466.283767677.2	397466.28	3767677	0	0	0	0	0	0	0.000214374	0.000214374	0	0	2.90735E-09	8.68197E-09	1.15893E-08	0.0115893
397566.283767677.2	397566.28	3767677	0	0	0	0	0	0	0.000189969	0.000189969	0	0	2.57637E-09	7.69357E-09	1.02699E-08	0.0102699
397666.283767677.2	397666.28	3767677	0	0	0	0	0	0	0.000159784	0.000159784	0	0	2.167E-09	6.47111E-09	8.6381E-09	0.0086381
397766.283767677.2	397766.28	3767677	0	0	0	0	0	0	0.000130459	0.000130459	0	0	1.76929E-09	5.28347E-09	7.05276E-09	0.0070528
397866.283767677.2	397866.28	3767677	0	0	0	0	0	0	0.000105258	0.000105258	0	0	1.42751E-09	4.26285E-09	5.69036E-09	0.0056904
396166.283767777.2	396166.28	3767777	0	0	0	0	0	0	3.49117E-05	3.49117E-05	0	0	4.73475E-10	1.4139E-09	1.88737E-09	0.0018874
396266.283767777.2	396266.28	3767777	0	0	0	0	0	0	4.02655E-05	4.02655E-05	0	0	5.46082E-10	1.63072E-09	2.1768E-09	0.0021768
396366.283767777.2	396366.28	3767777	0	0	0	0	0	0	4.68009E-05	4.68009E-05	0	0	6.34716E-10	1.8954E-09	2.53011E-09	0.0025301
396466.283767777.2	396466.28	3767777	0	0	0	0	0	0	5.55549E-05	5.55549E-05	0	0	7.53439E-10	2.24993E-09	3.00337E-09	0.0030034
396566.283767777.2	396566.28	3767777	0	0	0	0	0	0	6.62543E-05	6.62543E-05	0	0	8.98545E-10	2.68324E-09	3.58179E-09	0.0035818
396666.283767777.2	396666.28	3767777	0	0	0	0	0	0	8.14232E-05	8.14232E-05	0	0	1.10427E-09	3.29757E-09	4.40184E-09	0.0044018
396766.283767777.2	396766.28	3767777	0	0	0	0	0	0	0.000105209	0.000105209	0	0	1.42686E-09	4.2609E-09	5.68775E-09	0.0056878
396866.283767777.2	396866.28	3767777	0	0	0	0	0	0	0.000139044	0.000139044	0	0	1.88572E-09	5.63117E-09	7.51689E-09	0.0075169
396966.283767777.2	396966.28	3767777	0	0	0	0	0	0	0.000185668	0.000185668	0	0	2.51804E-09	7.5194E-09	1.00374E-08	0.0100374
397066.283767777.2	397066.28	3767777	0	0	0	0	0	0	0.00024648	0.00024648	0	0	3.34278E-09	9.98224E-09	1.3325E-08	0.013325
397166.283767777.2	397166.28	3767777	0	0	0	0	0	0	0.000314463	0.000314463	0	0	4.26476E-09	1.27355E-08	1.70002E-08	0.0170002
397266.283767777.2	397266.28	3767777	0	0	0	0	0	0	0.000374294	0.000374294	0	0	5.0762E-09	1.51586E-08	2.02348E-08	0.0202348
397366.283767777.2	397366.28	3767777	0	0	0	0	0	0	0.000388603	0.000388603	0	0	5.27026E-09	1.57381E-08	2.10084E-08	0.0210084
397466.283767777.2	397466.28	3767777	0	0	0	0	0	0	0.000352662	0.000352662	0	0	4.78283E-09	1.42825E-08	1.90654E-08	0.0190654
397566.283767777.2	397566.28	3767777	0	0	0	0	0	0	0.000291271	0.000291271	0	0	3.95024E-09	1.17962E-08	1.57465E-08	0.0157465
397666.283767777.2	397666.28	3767777	0	0	0	0	0	0	0.000228482	0.000228482	0	0	3.09868E-09	9.25332E-09	1.2352E-08	0.012352
397766.283767777.2	397766.28	3767777	0	0	0	0	0	0	0.000172276	0.000172276	0	0	2.33641E-09	6.97702E-09	9.31343E-09	0.0093134
397866.283767777.2	397866.28	3767777	0	0	0	0	0	0	0.000130949	0.000130949	0	0	1.77594E-09	5.30333E-09	7.07927E-09	0.0070793
396166.283767877.2	396166.28	3767877	0	0	0	0	0	0	3.54021E-05	3.54021E-05	0	0	4.80125E-10	1.43375E-09	1.91388E-09	0.0019139
396266.283767877.2	396266.28	3767877	0	0	0	0	0	0	4.10211E-05	4.10211E-05	0	0	5.5633E-10	1.66132E-09	2.21765E-09	0.0022176
396366.283767877.2	396366.28	3767877	0	0	0	0	0	0	4.81353E-05	4.81353E-05	0	0	6.52813E-10	1.94944E-09	2.60225E-09	0.0026023
396466.283767877.2	396466.28	3767877	0	0	0	0	0	0	5.71466E-05	5.71466E-05	0	0	7.75025E-10	2.31439E-09	3.08941E-09	0.0030894
396566.283767877.2	396566.28	3767877	0	0	0	0	0	0	6.90678E-05	6.90678E-05	0	0	9.36702E-10	2.79719E-09	3.73389E-09	0.0037339
397466.283767877.2	397466.28	3767877	0	0	0	0	0	0	0.000718251	0.000718251	0	0	9.74096E-09	2.90886E-08	3.88295E-08	0.0388295
397566.283767877.2	397566.28	3767877	0	0	0	0	0	0	0.000482872	0.000482872	0	0	6.54874E-09	1.95559E-08	2.61046E-08	0.0261046
397666.283767877.2	397666.28	3767877	0	0	0	0	0	0	0.000298	0.000298	0	0	4.04149E-09	1.20687E-08	1.61102E-08	0.0161102
397766.283767877.2	397766.28	3767877	0	0	0	0	0	0	0.000204776	0.000204776	0	0	2.77718E-09	8.29325E-09	1.10704E-08	0.0110704
397866.283767877.2	397866.28	3767877	0	0	0	0	0	0	0.000160354	0.000160354	0	0	2.17474E-09	6.49422E-09	8.66896E-09	0.008669
396166.283767977.2	396166.28	3767977	0	0	0	0	0	0	3.54182E-05	3.54182E-05	0	0	4.80343E-10	1.43441E-09	1.91475E-09	0.0019147
396266.283767977.2	396266.28	3767977	0	0	0	0	0	0	4.12542E-05	4.12542E-05	0	0	5.59492E-10	1.67076E-09	2.23025E-09	0.0022303
396366.283767977.2	396366.28	3767977	0	0	0	0	0	0	4.85774E-05	4.85774E-05	0	0	6.58809E-10	1.96734E-09	2.62615E-09	0.0026262
396466.283767977.2	396466.28	3767977	0	0	0	0	0	0	5.77655E-05	5.77655E-05	0	0	7.8342E-10	2.33946E-09	3.12288E-09	0.0031229
397466.283767977.2	397466.28	3767977	0	0	0	0	0	0	0.001572363	0.001572363	0	0	2.13245E-08	6.36794E-08	8.50038E-08	0.0850038
397566.283767977.2	397566.28	3767977	0	0	0	0	0	0	0.000765904	0.000765904	0	0	1.03872E-08	3.10185E-08	4.14057E-08	0.0414057
397666.283767977.2	397666.28	3767977	0	0	0	0	0	0	0.0004071	0.0004071	0	0	5.52111E-09	1.64872E-08	2.20083E-08	0.0220083
397766.283767977.2	397766.28	3767977	0	0	0	0	0	0	0.000292276	0.000292276	0	0	3.96387E-09	1.18369E-08	1.58008E-08	0.0158008
397866.283767977.2	397866.28	3767977	0	0	0	0	0	0	0.000187919	0.000187919	0	0	2.54857E-09	7.61056E-09	1.01591E-08	0.0101591
396166.283768077.2	396166.28	3768077	0	0	0	0	0	0	3.57236E-05	3.57236E-05	0	0	4.84486E-10	1.44678E-09	1.93126E-09	0.0019313

Garvey Reservoir Rehab - Mitigated Junction Structure			Demolition - 2025	Demolition - 2026	ite Preparation - 202	te Preparation - 202	Grading - 2025	Grading - 2026	nfrastructure - 202	nfrastructure - 202	Paving - 2025	itectural Coating -	Child Risk			
Unique Identifier	X (UTM)	Y (UTM)	1900	1900	1900	1900	1900	1900	2025	2026	1900	1900	3rd Trimester	0<2	Total	per million
396266.283768077.2	396266.28	3768077	0	0	0	0	0	0	4.11095E-05	4.11095E-05	0	0	5.5753E-10	1.6649E-09	2.22243E-09	0.0022224
396366.283768077.2	396366.28	3768077	0	0	0	0	0	0	4.84247E-05	4.84247E-05	0	0	6.56738E-10	1.96116E-09	2.6179E-09	0.0026179
396466.283768077.2	396466.28	3768077	0	0	0	0	0	0	5.82559E-05	5.82559E-05	0	0	7.9007E-10	2.35931E-09	3.14938E-09	0.0031494
397466.283768077.2	397466.28	3768077	0	0	0	0	0	0	0.006903384	0.006903384	0	0	9.36241E-08	2.79581E-07	3.73205E-07	0.3732053
397566.283768077.2	397566.28	3768077	0	0	0	0	0	0	0.001699429	0.001699429	0	0	2.30478E-08	6.88254E-08	9.18732E-08	0.0918732
397666.283768077.2	397666.28	3768077	0	0	0	0	0	0	0.000682286	0.000682286	0	0	9.2532E-09	2.7632E-08	3.68852E-08	0.0368852
397766.283768077.2	397766.28	3768077	0	0	0	0	0	0	0.000361706	0.000361706	0	0	4.90548E-09	1.46488E-08	1.95543E-08	0.0195543
397866.283768077.2	397866.28	3768077	0	0	0	0	0	0	0.000220813	0.000220813	0	0	2.99468E-09	8.94274E-09	1.19374E-08	0.0119374
396166.283768177.2	396166.28	3768177	0	0	0	0	0	0	3.54503E-05	3.54503E-05	0	0	4.80779E-10	1.43571E-09	1.91649E-09	0.0019165
396266.283768177.2	396266.28	3768177	0	0	0	0	0	0	4.09327E-05	4.09327E-05	0	0	5.55131E-10	1.65774E-09	2.21287E-09	0.0022129
396366.283768177.2	396366.28	3768177	0	0	0	0	0	0	4.81674E-05	4.81674E-05	0	0	6.53249E-10	1.95074E-09	2.60399E-09	0.002604
396466.283768177.2	396466.28	3768177	0	0	0	0	0	0	5.75887E-05	5.75887E-05	0	0	7.81021E-10	2.33229E-09	3.11331E-09	0.0031133
397466.283768177.2	397466.28	3768177	0	0	0	0	0	0	0.010144798	0.010144798	0	0	1.37584E-07	4.10856E-07	5.4844E-07	0.5484401
397566.283768177.2	397566.28	3768177	0	0	0	0	0	0	0.002231908	0.002231908	0	0	3.02693E-08	9.03904E-08	1.2066E-07	0.1206596
397666.283768177.2	397666.28	3768177	0	0	0	0	0	0	0.000840615	0.000840615	0	0	1.14005E-08	3.40442E-08	4.54447E-08	0.0454447
397766.283768177.2	397766.28	3768177	0	0	0	0	0	0	0.000434415	0.000434415	0	0	5.89156E-09	1.75934E-08	2.3485E-08	0.023485
397866.283768177.2	397866.28	3768177	0	0	0	0	0	0	0.000250564	0.000250564	0	0	3.39816E-09	1.01476E-08	1.35458E-08	0.0135458
396166.283768277.2	396166.28	3768277	0	0	0	0	0	0	3.44616E-05	3.44616E-05	0	0	4.6737E-10	1.39566E-09	1.86303E-09	0.001863
396266.283768277.2	396266.28	3768277	0	0	0	0	0	0	4.00404E-05	4.00404E-05	0	0	5.4303E-10	1.6216E-09	2.16463E-09	0.0021646
396366.283768277.2	396366.28	3768277	0	0	0	0	0	0	4.69858E-05	4.69858E-05	0	0	6.37223E-10	1.90288E-09	2.54011E-09	0.0025401
396466.283768277.2	396466.28	3768277	0	0	0	0	0	0	5.60533E-05	5.60533E-05	0	0	7.60198E-10	2.27011E-09	3.03031E-09	0.0030303
397366.283768277.2	397366.28	3768277	0	0	0	0	0	0	0.003437757	0.003437757	0	0	4.66231E-08	1.39226E-07	1.85849E-07	0.1858493
397466.283768277.2	397466.28	3768277	0	0	0	0	0	0	0.003531279	0.003531279	0	0	4.78914E-08	1.43014E-07	1.90905E-07	0.1909052
397566.283768277.2	397566.28	3768277	0	0	0	0	0	0	0.001850813	0.001850813	0	0	2.51008E-08	7.49563E-08	1.00057E-07	0.1000572
397666.283768277.2	397666.28	3768277	0	0	0	0	0	0	0.000858967	0.000858967	0	0	1.16494E-08	3.47874E-08	4.64368E-08	0.0464368
397766.283768277.2	397766.28	3768277	0	0	0	0	0	0	0.000461079	0.000461079	0	0	6.25318E-09	1.86733E-08	2.49265E-08	0.0249265
397866.283768277.2	397866.28	3768277	0	0	0	0	0	0	0.000285733	0.000285733	0	0	3.87513E-09	1.15719E-08	1.54471E-08	0.0154471
396166.283768377.2	396166.28	3768377	0	0	0	0	0	0	3.13185E-05	3.13185E-05	0	0	4.24743E-10	1.26837E-09	1.69311E-09	0.0016931
396266.283768377.2	396266.28	3768377	0	0	0	0	0	0	3.89311E-05	3.89311E-05	0	0	5.27985E-10	1.57667E-09	2.10466E-09	0.0021047
396366.283768377.2	396366.28	3768377	0	0	0	0	0	0	4.53861E-05	4.53861E-05	0	0	6.15528E-10	1.8381E-09	2.45363E-09	0.0024536
396466.283768377.2	396466.28	3768377	0	0	0	0	0	0	5.38427E-05	5.38427E-05	0	0	7.30218E-10	2.18058E-09	2.9108E-09	0.0029108
397266.283768377.2	397266.28	3768377	0	0	0	0	0	0	0.000831435	0.000831435	0	0	1.1276E-08	3.36724E-08	4.49484E-08	0.0449484
397366.283768377.2	397366.28	3768377	0	0	0	0	0	0	0.001354918	0.001354918	0	0	1.83755E-08	5.4873E-08	7.32485E-08	0.0732485
397466.283768377.2	397466.28	3768377	0	0	0	0	0	0	0.001551904	0.001551904	0	0	2.1047E-08	6.28508E-08	8.38978E-08	0.0838978
397566.283768377.2	397566.28	3768377	0	0	0	0	0	0	0.001192996	0.001192996	0	0	1.61795E-08	4.83153E-08	6.44948E-08	0.0644948
397666.283768377.2	397666.28	3768377	0	0	0	0	0	0	0.000754722	0.000754722	0	0	1.02356E-08	3.05656E-08	4.08012E-08	0.0408012
397766.283768377.2	397766.28	3768377	0	0	0	0	0	0	0.000463017	0.000463017	0	0	6.27946E-09	1.87518E-08	2.50312E-08	0.0250312
397866.283768377.2	397866.28	3768377	0	0	0	0	0	0	0.000304101	0.000304101	0	0	4.12424E-09	1.23158E-08	1.64401E-08	0.0164401
396166.283768477.2	396166.28	3768477	0	0	0	0	0	0	3.01609E-05	3.01609E-05	0	0	4.09044E-10	1.22149E-09	1.63054E-09	0.0016305
396266.283768477.2	396266.28	3768477	0	0	0	0	0	0	3.71947E-05	3.71947E-05	0	0	5.04437E-10	1.50635E-09	2.01079E-09	0.0020108
396366.283768477.2	396366.28	3768477	0	0	0	0	0	0	4.16642E-05	4.16642E-05	0	0	5.65052E-10	1.68736E-09	2.25242E-09	0.0022524
396466.283768477.2	396466.28	3768477	0	0	0	0	0	0	5.0989E-05	5.0989E-05	0	0	6.91515E-10	2.06501E-09	2.75653E-09	0.0027565
397166.283768477.2	397166.28	3768477	0	0	0	0	0	0	0.000331899	0.000331899	0	0	4.50123E-09	1.34416E-08	1.79428E-08	0.0179428
397266.283768477.2	397266.28	3768477	0	0	0	0	0	0	0.000506996	0.000506996	0	0	6.87591E-09	2.05329E-08	2.74088E-08	0.0274088
397366.283768477.2	397366.28	3768477	0	0	0	0	0	0	0.000708878	0.000708878	0	0	9.61384E-09	2.8709E-08	3.83228E-08	0.0383228
397466.283768477.2	397466.28	3768477	0	0	0	0	0	0	0.000803669	0.000803669	0	0	1.08994E-08	3.25479E-08	4.34473E-08	0.0434473
397566.283768477.2	397566.28	3768477	0	0	0	0	0	0	0.000733749	0.000733749	0	0	9.95115E-09	2.97162E-08	3.96674E-08	0.0396674
397666.283768477.2	397666.28	3768477	0	0	0	0	0	0	0.000552913	0.000552913	0	0	7.49863E-09	2.23925E-08	2.98911E-08	0.0298911
397766.283768477.2	397766.28	3768477	0	0	0	0	0	0	0.000400243	0.000400243	0	0	5.42812E-09	1.62095E-08	2.16376E-08	0.0216376
397866.283768477.2	397866.28	3768477	0	0	0	0	0	0	0.000281681	0.000281681	0	0	3.82018E-09	1.14079E-08	1.5228E-08	0.015228
396166.283768577.2	396166.28	3768577	0	0	0	0	0	0	3.14391E-05	3.14391E-05	0	0	4.26378E-10	1.27326E-09	1.69963E-09	0.0016996
396266.283768577.2	396266.28	3768577	0	0	0	0	0	0	3.24439E-05	3.24439E-05	0	0	4.40006E-10	1.31395E-09	1.75396E-09	0.001754
396366.283768577.2	396366.28	3768577	0	0	0	0	0	0	3.72108E-05	3.72108E-05	0	0	5.04655E-10	1.50701E-09	2.01166E-09	0.0020117
396466.283768577.2	396466.28	3768577	0	0	0	0	0	0	4.78057E-05	4.78057E-05	0	0	6.48343E-10	1.93609E-09	2.58443E-09	0.0025844
396566.283768577.2	396566.28	3768577	0	0	0	0	0	0	5.57318E-05	5.57318E-05	0	0	7.55837E-10	2.25709E-09	3.01293E-09	0.0030129
396866.283768577.2	396866.28	3768577	0	0	0	0	0	0	0.000104534	0.000104534	0	0	1.4177E-09	4.23355E-09	5.65125E-09	0.0056512
396966.283768577.2	396966.28	3768577	0	0	0	0	0	0	0.000134784	0.000134784	0	0	1.82794E-09	5.45862E-09	7.28656E-09	0.0072866
397066.283768577.2	397066.28	3768577	0	0	0	0	0	0	0.000178136	0.000178136	0	0	2.41589E-09	7.21435E-09	9.63024E-09	0.0096302
397166.283768577.2	397166.28	3768577	0	0	0	0	0	0	0.000244382	0.000244382	0	0	3.31432E-09	9.89727E-09	1.32116E-08	0.0132116
397266.283768577.2	397266.28	3768577	0	0	0	0	0	0	0.000333981	0.000333981	0	0	4.52946E-09	1.35259E-08	1.80554E-08	0.0180554
397366.283768577.2	397366.28	3768577	0	0	0	0	0	0	0.000434632	0.000434632	0	0	5.89451E-09	1.76022E-08	2.34967E-08	0.0234967
397466.283768577.2	397466.28	3768577	0	0	0	0	0	0	0.00047624	0.00047624	0	0	6.4588E-09	1.92873E-08	2.57461E-08	0.0257461
397566.283768577.2	397566.28	3768577	0	0	0	0	0	0	0.000479222	0.000479222	0	0	6.49924E-09	1.94081E-08	2.59073E-08	0.0259073
397666.283768577.2	397666.28	3768577	0	0	0	0	0	0	0.000406883	0.000406883	0	0	5.51817E-09	1.64784E-08	2.19966E-08	0.0219966
397766.283768577.2	397766.28	3768577	0	0	0	0	0	0	0.000316127	0.000316127	0	0	4.28733E-09	1.28029E-08	1.70902E-08	0.0170902
397866.283768577.2	397866.28	3768577	0	0	0	0	0	0	0.000242003	0.000242003	0	0	3.28205E-09	9.80091E-09	1.3083E-08	0.013083
396166.283768677.2	396166.28	3768677	0	0	0	0	0	0	2.99841E-05	2.99841E-05	0	0	4.06646E-10	1.21433E-09	1.62097E-09	0.001621
396266.283768677.2	396266.28	3768677	0	0	0	0	0	0	3.39149E-05	3.39149E-05	0	0	4.59956E-10	1.37353E-09	1.83348E-09	0.0018335
396366.283768677.2	396366.28	3768677	0	0	0	0	0	0	3.55789E-05	3.55789E-05	0	0	4.82524E-10	1.44092E-09	1.92344E-09	0.0019234

Garvey Reservoir Rehab - Mitigated Junction Structure			Demolition - 2025	Demolition - 2026	ite Preparation - 202	te Preparation - 202	Grading - 2025	Grading - 2026	nfrastructure - 202	nfrastructure - 202	Paving - 2025	itectural Coating -	Child Risk			
Unique Identifier	X (UTM)	Y (UTM)	1900	1900	1900	1900	1900	1900	2025	2026	1900	1900	3rd Trimester	0<2	Total	per million
396466.283768677.2	396466.28	3768677	0	0	0	0	0	0	4.44375E-05	4.44375E-05	0	0	6.02664E-10	1.79968E-09	2.40235E-09	0.0024023
396566.283768677.2	396566.28	3768677	0	0	0	0	0	0	5.17848E-05	5.17848E-05	0	0	7.02308E-10	2.09724E-09	2.79955E-09	0.0027995
396666.283768677.2	396666.28	3768677	0	0	0	0	0	0	6.119E-05	6.119E-05	0	0	8.29862E-10	2.47814E-09	3.30801E-09	0.003308
396766.283768677.2	396766.28	3768677	0	0	0	0	0	0	7.33605E-05	7.33605E-05	0	0	9.94919E-10	2.97104E-09	3.96596E-09	0.003966
396866.283768677.2	396866.28	3768677	0	0	0	0	0	0	8.98075E-05	8.98075E-05	0	0	1.21797E-09	3.63713E-09	4.8551E-09	0.0048551
396966.283768677.2	396966.28	3768677	0	0	0	0	0	0	0.000112131	0.000112131	0	0	1.52072E-09	4.5412E-09	6.06192E-09	0.0060619
397066.283768677.2	397066.28	3768677	0	0	0	0	0	0	0.000142911	0.000142911	0	0	1.93816E-09	5.78776E-09	7.72592E-09	0.0077259
397166.283768677.2	397166.28	3768677	0	0	0	0	0	0	0.000183144	0.000183144	0	0	2.48381E-09	7.41718E-09	9.90098E-09	0.009901
397366.283768677.2	397366.28	3768677	0	0	0	0	0	0	0.000292349	0.000292349	0	0	3.96485E-09	1.18399E-08	1.58047E-08	0.0158047
397466.283768677.2	397466.28	3768677	0	0	0	0	0	0	0.000329592	0.000329592	0	0	4.46994E-09	1.33482E-08	1.78181E-08	0.0178181
397566.283768677.2	397566.28	3768677	0	0	0	0	0	0	0.00033136	0.00033136	0	0	4.49392E-09	1.34198E-08	1.79137E-08	0.0179137
397666.283768677.2	397666.28	3768677	0	0	0	0	0	0	0.000300484	0.000300484	0	0	4.07518E-09	1.21693E-08	1.62445E-08	0.0162445
397766.283768677.2	397766.28	3768677	0	0	0	0	0	0	0.000251143	0.000251143	0	0	3.40601E-09	1.01711E-08	1.35771E-08	0.0135771
397866.283768677.2	397866.28	3768677	0	0	0	0	0	0	0.000203723	0.000203723	0	0	2.7629E-09	8.2506E-09	1.10135E-08	0.0110135
396166.283768777.2	396166.28	3768777	0	0	0	0	0	0	2.86175E-05	2.86175E-05	0	0	3.88112E-10	1.15898E-09	1.5471E-09	0.0015471
396266.283768777.2	396266.28	3768777	0	0	0	0	0	0	3.19937E-05	3.19937E-05	0	0	4.33901E-10	1.29572E-09	1.72962E-09	0.0017296
396366.283768777.2	396366.28	3768777	0	0	0	0	0	0	3.42847E-05	3.42847E-05	0	0	4.64971E-10	1.3885E-09	1.85347E-09	0.0018535
396466.283768777.2	396466.28	3768777	0	0	0	0	0	0	4.11979E-05	4.11979E-05	0	0	5.58729E-10	1.66848E-09	2.22721E-09	0.0022272
396566.283768777.2	396566.28	3768777	0	0	0	0	0	0	4.72269E-05	4.72269E-05	0	0	6.40494E-10	1.91265E-09	2.55314E-09	0.0025531
396666.283768777.2	396666.28	3768777	0	0	0	0	0	0	5.49279E-05	5.49279E-05	0	0	7.44935E-10	2.22453E-09	2.96947E-09	0.0029695
396766.283768777.2	396766.28	3768777	0	0	0	0	0	0	6.48797E-05	6.48797E-05	0	0	8.79902E-10	2.62757E-09	3.50748E-09	0.0035075
396866.283768777.2	396866.28	3768777	0	0	0	0	0	0	7.77898E-05	7.77898E-05	0	0	1.05499E-09	3.15042E-09	4.20541E-09	0.0042054
396966.283768777.2	396966.28	3768777	0	0	0	0	0	0	9.44217E-05	9.44217E-05	0	0	1.28055E-09	3.824E-09	5.10455E-09	0.0051045
397066.283768777.2	397066.28	3768777	0	0	0	0	0	0	0.000115861	0.000115861	0	0	1.57131E-09	4.69226E-09	6.26357E-09	0.0062636
397166.283768777.2	397166.28	3768777	0	0	0	0	0	0	0.000141938	0.000141938	0	0	1.92497E-09	5.74837E-09	7.67334E-09	0.0076733
397266.283768777.2	397266.28	3768777	0	0	0	0	0	0	0.000175218	0.000175218	0	0	2.37631E-09	7.09618E-09	9.47249E-09	0.0094725
397366.283768777.2	397366.28	3768777	0	0	0	0	0	0	0.000208007	0.000208007	0	0	2.82101E-09	8.42412E-09	1.12451E-08	0.0112451
397466.283768777.2	397466.28	3768777	0	0	0	0	0	0	0.000231231	0.000231231	0	0	3.13597E-09	9.36466E-09	1.25006E-08	0.0125006
397566.283768777.2	397566.28	3768777	0	0	0	0	0	0	0.000237115	0.000237115	0	0	3.21577E-09	9.60297E-09	1.28187E-08	0.0128187
397666.283768777.2	397666.28	3768777	0	0	0	0	0	0	0.000224093	0.000224093	0	0	3.03916E-09	9.07556E-09	1.21147E-08	0.0121147
397766.283768777.2	397766.28	3768777	0	0	0	0	0	0	0.000197951	0.000197951	0	0	2.68462E-09	8.01685E-09	1.07015E-08	0.0107015
397866.283768777.2	397866.28	3768777	0	0	0	0	0	0	0.000168747	0.000168747	0	0	2.28855E-09	6.8341E-09	9.12265E-09	0.0091227
396166.283768877.2	396166.28	3768877	0	0	0	0	0	0	2.70178E-05	2.70178E-05	0	0	3.66417E-10	1.0942E-09	1.46062E-09	0.0014606
396266.283768877.2	396266.28	3768877	0	0	0	0	0	0	3.01609E-05	3.01609E-05	0	0	4.09044E-10	1.22149E-09	1.63054E-09	0.0016305
396366.283768877.2	396366.28	3768877	0	0	0	0	0	0	3.36416E-05	3.36416E-05	0	0	4.5625E-10	1.36246E-09	1.81871E-09	0.0018187
396466.283768877.2	396466.28	3768877	0	0	0	0	0	0	3.81593E-05	3.81593E-05	0	0	5.17519E-10	1.54542E-09	2.06294E-09	0.0020629
396566.283768877.2	396566.28	3768877	0	0	0	0	0	0	4.33443E-05	4.33443E-05	0	0	5.87837E-10	1.75541E-09	2.34324E-09	0.0023432
396666.283768877.2	396666.28	3768877	0	0	0	0	0	0	4.96144E-05	4.96144E-05	0	0	6.72873E-10	2.00934E-09	2.68221E-09	0.0026822
396766.283768877.2	396766.28	3768877	0	0	0	0	0	0	5.78138E-05	5.78138E-05	0	0	7.84074E-10	2.34141E-09	3.12548E-09	0.0031255
396866.283768877.2	396866.28	3768877	0	0	0	0	0	0	6.88347E-05	6.88347E-05	0	0	9.3354E-10	2.78775E-09	3.72129E-09	0.0037213
396966.283768877.2	396966.28	3768877	0	0	0	0	0	0	8.14795E-05	8.14795E-05	0	0	1.10503E-09	3.29985E-09	4.40488E-09	0.0044049
397066.283768877.2	397066.28	3768877	0	0	0	0	0	0	9.60294E-05	9.60294E-05	0	0	1.30236E-09	3.88911E-09	5.19147E-09	0.0051915
397166.283768877.2	397166.28	3768877	0	0	0	0	0	0	0.000113795	0.000113795	0	0	1.54329E-09	4.60859E-09	6.15188E-09	0.0061519
397266.283768877.2	397266.28	3768877	0	0	0	0	0	0	0.000135113	0.000135113	0	0	1.83241E-09	5.47197E-09	7.30438E-09	0.0073044
397366.283768877.2	397366.28	3768877	0	0	0	0	0	0	0.000155137	0.000155137	0	0	2.10398E-09	6.28293E-09	8.38691E-09	0.0083869
397466.283768877.2	397466.28	3768877	0	0	0	0	0	0	0.000170957	0.000170957	0	0	2.31853E-09	6.92363E-09	9.24216E-09	0.0092422
397566.283768877.2	397566.28	3768877	0	0	0	0	0	0	0.00017738	0.00017738	0	0	2.40564E-09	7.18375E-09	9.58939E-09	0.0095894
397666.283768877.2	397666.28	3768877	0	0	0	0	0	0	0.000171158	0.000171158	0	0	2.32126E-09	6.93177E-09	9.25303E-09	0.009253
397766.283768877.2	397766.28	3768877	0	0	0	0	0	0	0.000157083	0.000157083	0	0	2.13036E-09	6.36172E-09	8.49208E-09	0.0084921
397866.283768877.2	397866.28	3768877	0	0	0	0	0	0	0.000139655	0.000139655	0	0	1.89401E-09	5.65591E-09	7.54992E-09	0.0075499
3964253767739	396425	3767739	0	0	0	0	0	0	5.10774E-05	5.10774E-05	0	0	6.92715E-10	2.06859E-09	2.76131E-09	0.0027613
3964753767739	396475	3767739	0	0	0	0	0	0	5.57157E-05	5.57157E-05	0	0	7.55619E-10	2.25644E-09	3.01206E-09	0.0030121
3965253767739	396525	3767739	0	0	0	0	0	0	6.05951E-05	6.05951E-05	0	0	8.21795E-10	2.45405E-09	3.27585E-09	0.0032758
3965753767739	396575	3767739	0	0	0	0	0	0	6.67688E-05	6.67688E-05	0	0	9.05522E-10	2.70408E-09	3.6096E-09	0.0036096
3966253767739	396625	3767739	0	0	0	0	0	0	7.23798E-05	7.23798E-05	0	0	9.81618E-10	2.93132E-09	3.91294E-09	0.0039129
3966753767739	396675	3767739	0	0	0	0	0	0	8.02978E-05	8.02978E-05	0	0	1.089E-09	3.25199E-09	4.341E-09	0.004341
3967253767739	396725	3767739	0	0	0	0	0	0	9.15278E-05	9.15278E-05	0	0	1.2413E-09	3.7068E-09	4.9481E-09	0.0049481
3967753767739	396775	3767739	0	0	0	0	0	0	0.000102155	0.000102155	0	0	1.38543E-09	4.13718E-09	5.52261E-09	0.0055226
3968253767739	396825	3767739	0	0	0	0	0	0	0.00011693	0.00011693	0	0	1.58581E-09	4.73556E-09	6.32137E-09	0.0063214
3968753767739	396875	3767739	0	0	0	0	0	0	0.000134124	0.000134124	0	0	1.819E-09	5.43193E-09	7.25093E-09	0.0072509
3969253767739	396925	3767739	0	0	0	0	0	0	0.000152935	0.000152935	0	0	2.07411E-09	6.19373E-09	8.26784E-09	0.0082678
3969753767739	396975	3767739	0	0	0	0	0	0	0.000174197	0.000174197	0	0	2.36247E-09	7.05483E-09	9.4173E-09	0.0094173
3970253767739	397025	3767739	0	0	0	0	0	0	0.000197412	0.000197412	0	0	2.67732E-09	7.99504E-09	1.06724E-08	0.0106724
3970753767739	397075	3767739	0	0	0	0	0	0	0.000221408	0.000221408	0	0	3.00274E-09	8.96683E-09	1.19696E-08	0.0119696
3971253767739	397125	3767739	0	0	0	0	0	0	0.000245435	0.000245435	0	0	3.32861E-09	9.93992E-09	1.32685E-08	0.0132685
3971753767739	397175	3767739	0	0	0	0	0	0	0.000269053	0.000269053	0	0	3.64891E-09	1.08964E-08	1.45453E-08	0.0145453
3972253767739	397225	3767739	0	0	0	0	0	0	0.000289262	0.000289262	0	0	3.92298E-09	1.17149E-08	1.56378E-08	0.0156378
3972753767739	397275	3767739	0	0	0	0	0	0	0.00030558	0.00030558	0	0	4.1443E-09	1.23757E-08	1.652E-08	0.01652
3973253767739	397325	3767739	0	0	0	0	0	0	0.000310773	0.000310773	0	0	4.21472E-09	1.25861E-08	1.68008E-08	0.0168008

Garvey Reservoir Rehab - Mitigated Junction Structure			Demolition - 2025	Demolition - 2026	ite Preparation - 202	te Preparation - 202	Grading - 2025	Grading - 2026	nfrastructure - 202	nfrastructure - 202	Paving - 2025	itectural Coating -	Child Risk			
Unique Identifier	X (UTM)	Y (UTM)	1900	1900	1900	1900	1900	1900	2025	2026	1900	1900	3rd Trimester	0<2	Total	per million
3973753767739	397375	3767739	0	0	0	0	0	0	0.000307461	0.000307461	0	0	4.16981E-09	1.24519E-08	1.66217E-08	0.0166217
3974253767739	397425	3767739	0	0	0	0	0	0	0.000298884	0.000298884	0	0	4.05348E-09	1.21046E-08	1.6158E-08	0.016158
3974753767739	397475	3767739	0	0	0	0	0	0	0.000287043	0.000287043	0	0	3.8929E-09	1.1625E-08	1.55179E-08	0.0155179
3975253767739	397525	3767739	0	0	0	0	0	0	0.000266762	0.000266762	0	0	3.61784E-09	1.08036E-08	1.44215E-08	0.0144215
3964253767789	396425	3767789	0	0	0	0	0	0	5.20099E-05	5.20099E-05	0	0	7.05361E-10	2.10636E-09	2.81172E-09	0.0028117
3964753767789	396475	3767789	0	0	0	0	0	0	5.66401E-05	5.66401E-05	0	0	7.68157E-10	2.29388E-09	3.06203E-09	0.003062
3965253767789	396525	3767789	0	0	0	0	0	0	6.17366E-05	6.17366E-05	0	0	8.37276E-10	2.50028E-09	3.33756E-09	0.0033376
3965753767789	396575	3767789	0	0	0	0	0	0	6.75485E-05	6.75485E-05	0	0	9.16097E-10	2.73566E-09	3.65176E-09	0.0036518
3966253767789	396625	3767789	0	0	0	0	0	0	7.48396E-05	7.48396E-05	0	0	1.01498E-09	3.03094E-09	4.04592E-09	0.0040459
3966753767789	396675	3767789	0	0	0	0	0	0	8.39956E-05	8.39956E-05	0	0	1.13915E-09	3.40175E-09	4.5409E-09	0.0045409
3967253767789	396725	3767789	0	0	0	0	0	0	9.60776E-05	9.60776E-05	0	0	1.30301E-09	3.89106E-09	5.19407E-09	0.0051941
3967753767789	396775	3767789	0	0	0	0	0	0	0.00010902	0.00010902	0	0	1.47853E-09	4.41521E-09	5.89374E-09	0.0058937
3968253767789	396825	3767789	0	0	0	0	0	0	0.000125531	0.000125531	0	0	1.70246E-09	5.0839E-09	6.78637E-09	0.0067864
3968753767789	396875	3767789	0	0	0	0	0	0	0.000145001	0.000145001	0	0	1.96651E-09	5.87241E-09	7.83891E-09	0.0078389
3969253767789	396925	3767789	0	0	0	0	0	0	0.000167975	0.000167975	0	0	2.27809E-09	6.80285E-09	9.08094E-09	0.0090809
3969753767789	396975	3767789	0	0	0	0	0	0	0.000195459	0.000195459	0	0	2.65083E-09	7.91593E-09	1.05668E-08	0.0105668
3970253767789	397025	3767789	0	0	0	0	0	0	0.000227147	0.000227147	0	0	3.08059E-09	9.19928E-09	1.22799E-08	0.0122799
3970753767789	397075	3767789	0	0	0	0	0	0	0.000262429	0.000262429	0	0	3.55908E-09	1.06281E-08	1.41872E-08	0.0141872
3971253767789	397125	3767789	0	0	0	0	0	0	0.000299889	0.000299889	0	0	4.06711E-09	1.21452E-08	1.62124E-08	0.0162124
3971753767789	397175	3767789	0	0	0	0	0	0	0.000338169	0.000338169	0	0	4.58626E-09	1.36956E-08	1.82818E-08	0.0182818
3972253767789	397225	3767789	0	0	0	0	0	0	0.00037333	0.00037333	0	0	5.06312E-09	1.51195E-08	2.01827E-08	0.0201827
3972753767789	397275	3767789	0	0	0	0	0	0	0.000404391	0.000404391	0	0	5.48437E-09	1.63775E-08	2.18619E-08	0.0218619
3973253767789	397325	3767789	0	0	0	0	0	0	0.000419455	0.000419455	0	0	5.68868E-09	1.69876E-08	2.26763E-08	0.0226763
3973753767789	397375	3767789	0	0	0	0	0	0	0.000417357	0.000417357	0	0	5.66022E-09	1.69026E-08	2.25628E-08	0.0225628
3974253767789	397425	3767789	0	0	0	0	0	0	0.000402212	0.000402212	0	0	5.45483E-09	1.62893E-08	2.17441E-08	0.0217441
3974753767789	397475	3767789	0	0	0	0	0	0	0.000370685	0.000370685	0	0	5.02725E-09	1.50124E-08	2.00397E-08	0.0200397
3975253767789	397525	3767789	0	0	0	0	0	0	0.000341899	0.000341899	0	0	4.63685E-09	1.38466E-08	1.84835E-08	0.0184835
3964253767839	396425	3767839	0	0	0	0	0	0	5.28057E-05	5.28057E-05	0	0	7.16154E-10	2.13859E-09	2.85474E-09	0.0028547
3964753767839	396475	3767839	0	0	0	0	0	0	5.77575E-05	5.77575E-05	0	0	7.83311E-10	2.33913E-09	3.12244E-09	0.0031224
3965253767839	396525	3767839	0	0	0	0	0	0	6.2645E-05	6.2645E-05	0	0	8.49595E-10	2.53707E-09	3.38666E-09	0.0033867
3965753767839	396575	3767839	0	0	0	0	0	0	6.91965E-05	6.91965E-05	0	0	9.38446E-10	2.8024E-09	3.74084E-09	0.0037408
3966253767839	396625	3767839	0	0	0	0	0	0	7.70984E-05	7.70984E-05	0	0	1.04561E-09	3.12242E-09	4.16803E-09	0.004168
3966753767839	396675	3767839	0	0	0	0	0	0	8.83364E-05	8.83364E-05	0	0	1.19802E-09	3.57755E-09	4.77557E-09	0.0047756
3967253767839	396725	3767839	0	0	0	0	0	0	0.000100507	0.000100507	0	0	1.36308E-09	4.07044E-09	5.43352E-09	0.0054335
3967753767839	396775	3767839	0	0	0	0	0	0	0.000115097	0.000115097	0	0	1.56095E-09	4.66133E-09	6.22228E-09	0.0062223
3968253767839	396825	3767839	0	0	0	0	0	0	0.00013316	0.00013316	0	0	1.80592E-09	5.39286E-09	7.19878E-09	0.0071988
3968753767839	396875	3767839	0	0	0	0	0	0	0.000155459	0.000155459	0	0	2.10834E-09	6.29596E-09	8.4043E-09	0.0084043
3969253767839	396925	3767839	0	0	0	0	0	0	0.000182911	0.000182911	0	0	2.48065E-09	7.40773E-09	9.88838E-09	0.0098884
3969753767839	396975	3767839	0	0	0	0	0	0	0.000216954	0.000216954	0	0	2.94235E-09	8.78647E-09	1.17288E-08	0.0117288
3970253767839	397025	3767839	0	0	0	0	0	0	0.000258257	0.000258257	0	0	3.50249E-09	1.04592E-08	1.39617E-08	0.0139617
3970753767839	397075	3767839	0	0	0	0	0	0	0.000308812	0.000308812	0	0	4.18812E-09	1.25066E-08	1.66947E-08	0.0166947
3971253767839	397125	3767839	0	0	0	0	0	0	0.000365396	0.000365396	0	0	4.95552E-09	1.47982E-08	1.97537E-08	0.0197537
3971753767839	397175	3767839	0	0	0	0	0	0	0.000431562	0.000431562	0	0	5.85286E-09	1.74779E-08	2.33307E-08	0.0233307
3972253767839	397225	3767839	0	0	0	0	0	0	0.000499255	0.000499255	0	0	6.77092E-09	2.02194E-08	2.69903E-08	0.0269903
3972753767839	397275	3767839	0	0	0	0	0	0	0.000553234	0.000553234	0	0	7.50299E-09	2.24055E-08	2.99085E-08	0.0299085
3973253767839	397325	3767839	0	0	0	0	0	0	0.000575493	0.000575493	0	0	7.80487E-09	2.3307E-08	3.11119E-08	0.0311119
3973753767839	397375	3767839	0	0	0	0	0	0	0.000598435	0.000598435	0	0	8.11601E-09	2.42361E-08	3.23521E-08	0.0323521
3974753767839	397475	3767839	0	0	0	0	0	0	0.00052526	0.00052526	0	0	7.1236E-09	2.12726E-08	2.83962E-08	0.0283962
3975253767839	397525	3767839	0	0	0	0	0	0	0.000446192	0.000446192	0	0	6.05128E-09	1.80704E-08	2.41217E-08	0.0241217
3964253767889	396425	3767889	0	0	0	0	0	0	5.33925E-05	5.33925E-05	0	0	7.24113E-10	2.16235E-09	2.88647E-09	0.0028865
3964753767889	396475	3767889	0	0	0	0	0	0	5.78299E-05	5.78299E-05	0	0	7.84292E-10	2.34206E-09	3.12635E-09	0.0031264
3965253767889	396525	3767889	0	0	0	0	0	0	6.36579E-05	6.36579E-05	0	0	8.63331E-10	2.57809E-09	3.44142E-09	0.0034414
3965753767889	396575	3767889	0	0	0	0	0	0	7.10132E-05	7.10132E-05	0	0	9.63085E-10	2.87597E-09	3.83906E-09	0.0038391
3974753767889	397475	3767889	0	0	0	0	0	0	0.000763653	0.000763653	0	0	1.03567E-08	3.09273E-08	4.1284E-08	0.041284
3975253767889	397525	3767889	0	0	0	0	0	0	0.000579641	0.000579641	0	0	7.86112E-09	2.3475E-08	3.13361E-08	0.0313361
3964253767939	396425	3767939	0	0	0	0	0	0	5.38105E-05	5.38105E-05	0	0	7.29782E-10	2.17928E-09	2.90906E-09	0.0029091
3964753767939	396475	3767939	0	0	0	0	0	0	5.83926E-05	5.83926E-05	0	0	7.91923E-10	2.36485E-09	3.15677E-09	0.0031568
3965253767939	396525	3767939	0	0	0	0	0	0	6.45823E-05	6.45823E-05	0	0	8.75869E-10	2.61553E-09	3.4914E-09	0.0034914
3974753767939	397475	3767939	0	0	0	0	0	0	0.001037376	0.001037376	0	0	1.4069E-08	4.20129E-08	5.60818E-08	0.0560818
3975253767939	397525	3767939	0	0	0	0	0	0	0.000798613	0.000798613	0	0	1.08308E-08	3.23432E-08	4.3174E-08	0.043174
3964253767989	396425	3767989	0	0	0	0	0	0	5.36658E-05	5.36658E-05	0	0	7.27819E-10	2.17342E-09	2.90124E-09	0.0029012
3964753767989	396475	3767989	0	0	0	0	0	0	5.88347E-05	5.88347E-05	0	0	7.97919E-10	2.38275E-09	3.18067E-09	0.0031807
3974753767989	397475	3767989	0	0	0	0	0	0	0.001629389	0.001629389	0	0	2.20979E-08	6.59889E-08	8.80867E-08	0.0880867
3975253767989	397525	3767989	0	0	0	0	0	0	0.001125672	0.001125672	0	0	1.52664E-08	4.55888E-08	6.08552E-08	0.0608552
3964253768039	396425	3768039	0	0	0	0	0	0	5.37543E-05	5.37543E-05	0	0	7.29018E-10	2.177E-09	2.90602E-09	0.002906
3964753768039	396475	3768039	0	0	0	0	0	0	5.91401E-05	5.91401E-05	0	0	8.02062E-10	2.39513E-09	3.19719E-09	0.0031972
3974753768039	397475	3768039	0	0	0	0	0	0	0.003344348	0.003344348	0	0	4.53562E-08	1.35443E-07	1.808E-07	0.1807995
3975253768039	397525	3768039	0	0	0	0	0	0	0.002034415	0.002034415	0	0	2.75908E-08	8.23921E-08	1.09983E-07	0.1099829
3964253768089	396425	3768089	0	0	0	0	0	0	5.37623E-05	5.37623E-05	0	0	7.29127E-10	2.17733E-09	2.90646E-09	0.0029065

Garvey Reservoir Rehab - Mitigated Junction Structure			Demolition - 2025	Demolition - 2026	ite Preparation - 202	te Preparation - 202	Grading - 2025	Grading - 2026	nfrastructure - 202	nfrastructure - 202	Paving - 2025	itectural Coating -	Child Risk			
Unique Identifier	X (UTM)	Y (UTM)	1900	1900	1900	1900	1900	1900	2025	2026	1900	1900	3rd Trimester	0<2	Total	per million
3964753768089	396475	3768089	0	0	0	0	0	0	5.92446E-05	5.92446E-05	0	0	8.03479E-10	2.39936E-09	3.20284E-09	0.0032028
3974753768089	397475	3768089	0	0	0	0	0	0	0.006696792	0.006696792	0	0	9.08223E-08	2.71214E-07	3.62037E-07	0.3620367
3975253768089	397525	3768089	0	0	0	0	0	0	0.00309204	0.00309204	0	0	4.19344E-08	1.25225E-07	1.67159E-07	0.1671594
3964253768139	396425	3768139	0	0	0	0	0	0	5.3907E-05	5.3907E-05	0	0	7.3109E-10	2.18319E-09	2.91428E-09	0.0029143
3964753768139	396475	3768139	0	0	0	0	0	0	5.89472E-05	5.89472E-05	0	0	7.99446E-10	2.38731E-09	3.18676E-09	0.0031868
3974253768139	397425	3768139	0	0	0	0	0	0	0.05099347	0.05099347	0	0	6.91576E-07	2.06519E-06	2.75677E-06	2.7567688
3974753768139	397475	3768139	0	0	0	0	0	0	0.010254485	0.010254485	0	0	1.39072E-07	4.15298E-07	5.5437E-07	0.5543699
3975253768139	397525	3768139	0	0	0	0	0	0	0.003831553	0.003831553	0	0	5.19637E-08	1.55175E-07	2.07138E-07	0.2071384
3964253768189	396425	3768189	0	0	0	0	0	0	5.34086E-05	5.34086E-05	0	0	7.24331E-10	2.163E-09	2.88733E-09	0.0028873
3964753768189	396475	3768189	0	0	0	0	0	0	5.84247E-05	5.84247E-05	0	0	7.92359E-10	2.36615E-09	3.15851E-09	0.0031585
3973753768189	397375	3768189	0	0	0	0	0	0	0.016018692	0.016018692	0	0	2.17246E-07	6.48744E-07	8.6599E-07	0.8659899
3974253768189	397425	3768189	0	0	0	0	0	0	0.014408275	0.014408275	0	0	1.95406E-07	5.83523E-07	7.78929E-07	0.7789288
3974753768189	397475	3768189	0	0	0	0	0	0	0.007940294	0.007940294	0	0	1.07687E-07	3.21575E-07	4.29262E-07	0.4292619
3975253768189	397525	3768189	0	0	0	0	0	0	0.003821682	0.003821682	0	0	5.18299E-08	1.54775E-07	2.06605E-07	0.2066048
3964253768239	396425	3768239	0	0	0	0	0	0	5.27334E-05	5.27334E-05	0	0	7.15173E-10	2.13566E-09	2.85083E-09	0.0028508
3964753768239	396475	3768239	0	0	0	0	0	0	5.76771E-05	5.76771E-05	0	0	7.8222E-10	2.33587E-09	3.11809E-09	0.0031181
3973753768239	397375	3768239	0	0	0	0	0	0	0.006073027	0.006073027	0	0	8.23627E-08	2.45952E-07	3.28315E-07	0.3283152
3974253768239	397425	3768239	0	0	0	0	0	0	0.005727302	0.005727302	0	0	7.7674E-08	2.31951E-07	3.09625E-07	0.3096249
3974753768239	397475	3768239	0	0	0	0	0	0	0.004310607	0.004310607	0	0	5.84607E-08	1.74576E-07	2.33037E-07	0.2330366
3975253768239	397525	3768239	0	0	0	0	0	0	0.002826131	0.002826131	0	0	3.83281E-08	1.14456E-07	1.52784E-07	0.152784
3964253768289	396425	3768289	0	0	0	0	0	0	5.1833E-05	5.1833E-05	0	0	7.02963E-10	2.09919E-09	2.80216E-09	0.0028022
3964753768289	396475	3768289	0	0	0	0	0	0	5.67366E-05	5.67366E-05	0	0	7.69465E-10	2.29778E-09	3.06725E-09	0.0030672
3973253768289	397325	3768289	0	0	0	0	0	0	0.002275364	0.002275364	0	0	3.08586E-08	9.21503E-08	1.23009E-07	0.123009
3973753768289	397375	3768289	0	0	0	0	0	0	0.003143986	0.003143986	0	0	4.26389E-08	1.27329E-07	1.69968E-07	0.1699677
3974253768289	397425	3768289	0	0	0	0	0	0	0.003549936	0.003549936	0	0	4.81444E-08	1.43769E-07	1.91914E-07	0.1919139
3974753768289	397475	3768289	0	0	0	0	0	0	0.003152659	0.003152659	0	0	4.27565E-08	1.2768E-07	1.70437E-07	0.1704366
3975253768289	397525	3768289	0	0	0	0	0	0	0.002351796	0.002351796	0	0	3.18952E-08	9.52457E-08	1.27141E-07	0.1271409
3964253768339	396425	3768339	0	0	0	0	0	0	5.09327E-05	5.09327E-05	0	0	6.90752E-10	2.06273E-09	2.75348E-09	0.0027535
3964753768339	396475	3768339	0	0	0	0	0	0	5.56353E-05	5.56353E-05	0	0	7.54529E-10	2.25318E-09	3.00771E-09	0.0030077
3965253768339	396525	3768339	0	0	0	0	0	0	6.13427E-05	6.13427E-05	0	0	8.31934E-10	2.48433E-09	3.31626E-09	0.0033163
3972753768339	397275	3768339	0	0	0	0	0	0	0.001094692	0.001094692	0	0	1.48463E-08	4.43341E-08	5.91804E-08	0.0591804
3973253768339	397325	3768339	0	0	0	0	0	0	0.001495763	0.001495763	0	0	2.02856E-08	6.05771E-08	8.08627E-08	0.0808627
3973753768339	397375	3768339	0	0	0	0	0	0	0.001910781	0.001910781	0	0	2.59141E-08	7.7385E-08	1.03299E-07	0.1032991
3974253768339	397425	3768339	0	0	0	0	0	0	0.002143804	0.002143804	0	0	2.90744E-08	8.68223E-08	1.15897E-07	0.1158967
3974753768339	397475	3768339	0	0	0	0	0	0	0.002063185	0.002063185	0	0	2.7981E-08	8.35572E-08	1.11538E-07	0.1115383
3975253768339	397525	3768339	0	0	0	0	0	0	0.001751889	0.001751889	0	0	2.37592E-08	7.095E-08	9.47093E-08	0.0947093
3964253768389	396425	3768389	0	0	0	0	0	0	4.98153E-05	4.98153E-05	0	0	6.75599E-10	2.01748E-09	2.69308E-09	0.0026931
3964753768389	396475	3768389	0	0	0	0	0	0	5.43411E-05	5.43411E-05	0	0	7.36977E-10	2.20077E-09	2.93775E-09	0.0029377
3965253768389	396525	3768389	0	0	0	0	0	0	5.9735E-05	5.9735E-05	0	0	8.1013E-10	2.41922E-09	3.22935E-09	0.0032293
3972253768389	397225	3768389	0	0	0	0	0	0	0.000626329	0.000626329	0	0	8.49431E-09	2.53658E-08	3.38601E-08	0.0338601
3972753768389	397275	3768389	0	0	0	0	0	0	0.000817271	0.000817271	0	0	1.10839E-08	3.30988E-08	4.41826E-08	0.0441826
3973253768389	397325	3768389	0	0	0	0	0	0	0.001049667	0.001049667	0	0	1.42356E-08	4.25106E-08	5.67463E-08	0.0567463
3973753768389	397375	3768389	0	0	0	0	0	0	0.001278784	0.001278784	0	0	1.73429E-08	5.17897E-08	6.91326E-08	0.0691326
3974253768389	397425	3768389	0	0	0	0	0	0	0.001418825	0.001418825	0	0	1.92422E-08	5.74612E-08	7.67034E-08	0.0767034
3974753768389	397475	3768389	0	0	0	0	0	0	0.001414661	0.001414661	0	0	1.91857E-08	5.72926E-08	7.64783E-08	0.0764783
3975253768389	397525	3768389	0	0	0	0	0	0	0.001279403	0.001279403	0	0	1.73513E-08	5.18147E-08	6.91661E-08	0.0691661
3964253768439	396425	3768439	0	0	0	0	0	0	4.86819E-05	4.86819E-05	0	0	6.60227E-10	1.97158E-09	2.6318E-09	0.0026318
3964753768439	396475	3768439	0	0	0	0	0	0	5.29263E-05	5.29263E-05	0	0	7.17789E-10	2.14347E-09	2.86126E-09	0.0028613
3965253768439	396525	3768439	0	0	0	0	0	0	5.79665E-05	5.79665E-05	0	0	7.86145E-10	2.34759E-09	3.13374E-09	0.0031337
3971753768439	397175	3768439	0	0	0	0	0	0	0.000396039	0.000396039	0	0	5.3711E-09	1.60392E-08	2.14103E-08	0.0214103
3972253768439	397225	3768439	0	0	0	0	0	0	0.00050321	0.00050321	0	0	6.82456E-09	2.03796E-08	2.72041E-08	0.0272041
3972753768439	397275	3768439	0	0	0	0	0	0	0.000629392	0.000629392	0	0	8.53585E-09	2.54898E-08	3.40257E-08	0.0340257
3973253768439	397325	3768439	0	0	0	0	0	0	0.000771852	0.000771852	0	0	1.04679E-08	3.12594E-08	4.17273E-08	0.0417273
3973753768439	397375	3768439	0	0	0	0	0	0	0.000911757	0.000911757	0	0	1.23653E-08	3.69254E-08	4.92907E-08	0.0492907
3974253768439	397425	3768439	0	0	0	0	0	0	0.001010503	0.001010503	0	0	1.37045E-08	4.09245E-08	5.4629E-08	0.054629
3974753768439	397475	3768439	0	0	0	0	0	0	0.001023847	0.001023847	0	0	1.38855E-08	4.14649E-08	5.53504E-08	0.0553504
3975253768439	397525	3768439	0	0	0	0	0	0	0.000963059	0.000963059	0	0	1.30611E-08	3.90031E-08	5.20641E-08	0.0520641
3964253768489	396425	3768489	0	0	0	0	0	0	4.73475E-05	4.73475E-05	0	0	6.42129E-10	1.91753E-09	2.55966E-09	0.0025597
3964753768489	396475	3768489	0	0	0	0	0	0	5.13668E-05	5.13668E-05	0	0	6.96639E-10	2.08031E-09	2.77695E-09	0.002777
3965253768489	396525	3768489	0	0	0	0	0	0	5.61096E-05	5.61096E-05	0	0	7.60961E-10	2.27239E-09	3.03335E-09	0.0030334
3970753768489	397075	3768489	0	0	0	0	0	0	0.000225459	0.000225459	0	0	3.05769E-09	9.13091E-09	1.21886E-08	0.0121886
3971253768489	397125	3768489	0	0	0	0	0	0	0.000270837	0.000270837	0	0	3.67311E-09	1.09687E-08	1.46418E-08	0.0146418
3971753768489	397175	3768489	0	0	0	0	0	0	0.000331159	0.000331159	0	0	4.4912E-09	1.34117E-08	1.79029E-08	0.0179029
3972253768489	397225	3768489	0	0	0	0	0	0	0.000408531	0.000408531	0	0	5.54052E-09	1.65452E-08	2.20857E-08	0.0220857
3972753768489	397275	3768489	0	0	0	0	0	0	0.000497277	0.000497277	0	0	6.7441E-09	2.01393E-08	2.68834E-08	0.0268834
3973253768489	397325	3768489	0	0	0	0	0	0	0.000586506	0.000586506	0	0	7.95423E-09	2.3753E-08	3.17072E-08	0.0317072
3973753768489	397375	3768489	0	0	0	0	0	0	0.000679143	0.000679143	0	0	9.21058E-09	2.75047E-08	3.67153E-08	0.0367153
3974253768489	397425	3768489	0	0	0	0	0	0	0.00074551	0.00074551	0	0	1.01106E-08	3.01925E-08	4.03032E-08	0.0403032
3974753768489	397475	3768489	0	0	0	0	0	0	0.000747303	0.000747303	0	0	1.0135E-08	3.02651E-08	4.04001E-08	0.0404001

Garvey Reservoir Rehab - Mitigated Junction Structure			Demolition - 2025	Demolition - 2026	ite Preparation - 202	te Preparation - 202	Grading - 2025	Grading - 2026	nfrastructure - 202	nfrastructure - 202	Paving - 2025	itectural Coating -	Child Risk			
Unique Identifier	X (UTM)	Y (UTM)	1900	1900	1900	1900	1900	1900	2025	2026	1900	1900	3rd Trimester	0<2	Total	per million
3975253768489	397525	3768489	0	0	0	0	0	0	0.000732913	0.000732913	0	0	9.93981E-09	2.96824E-08	3.96222E-08	0.0396222
3964253768539	396425	3768539	0	0	0	0	0	0	4.59568E-05	4.59568E-05	0	0	6.23269E-10	1.86121E-09	2.48448E-09	0.0024845
3964753768539	396475	3768539	0	0	0	0	0	0	4.97591E-05	4.97591E-05	0	0	6.74835E-10	2.0152E-09	2.69004E-09	0.00269
3965253768539	396525	3768539	0	0	0	0	0	0	5.41321E-05	5.41321E-05	0	0	7.34142E-10	2.1923E-09	2.92645E-09	0.0029264
3965753768539	396575	3768539	0	0	0	0	0	0	5.86498E-05	5.86498E-05	0	0	7.95412E-10	2.37527E-09	3.17068E-09	0.0031707
3970253768539	397025	3768539	0	0	0	0	0	0	0.000170555	0.000170555	0	0	2.31308E-09	6.90735E-09	9.22043E-09	0.0092204
3970753768539	397075	3768539	0	0	0	0	0	0	0.000199848	0.000199848	0	0	2.71035E-09	8.09368E-09	1.0804E-08	0.010804
3971253768539	397125	3768539	0	0	0	0	0	0	0.000235781	0.000235781	0	0	3.19767E-09	9.54893E-09	1.27466E-08	0.0127466
3971753768539	397175	3768539	0	0	0	0	0	0	0.000281754	0.000281754	0	0	3.82116E-09	1.14108E-08	1.52319E-08	0.0152319
3972253768539	397225	3768539	0	0	0	0	0	0	0.000336625	0.000336625	0	0	4.56533E-09	1.3633E-08	1.81984E-08	0.0181984
3972753768539	397275	3768539	0	0	0	0	0	0	0.000401626	0.000401626	0	0	5.44687E-09	1.62655E-08	2.17124E-08	0.0217124
3973253768539	397325	3768539	0	0	0	0	0	0	0.000464319	0.000464319	0	0	6.29712E-09	1.88045E-08	2.51016E-08	0.0251016
3973753768539	397375	3768539	0	0	0	0	0	0	0.0005269	0.0005269	0	0	7.14584E-09	2.1339E-08	2.84848E-08	0.0284848
3974253768539	397425	3768539	0	0	0	0	0	0	0.000559601	0.000559601	0	0	7.58934E-09	2.26634E-08	3.02527E-08	0.0302527
3974753768539	397475	3768539	0	0	0	0	0	0	0.000575308	0.000575308	0	0	7.80236E-09	2.32995E-08	3.11019E-08	0.0311019
3975253768539	397525	3768539	0	0	0	0	0	0	0.00056735	0.00056735	0	0	7.69443E-09	2.29772E-08	3.06716E-08	0.0306716
3964253768589	396425	3768589	0	0	0	0	0	0	4.42044E-05	4.42044E-05	0	0	5.99502E-10	1.79024E-09	2.38974E-09	0.0023897
3964753768589	396475	3768589	0	0	0	0	0	0	4.8071E-05	4.8071E-05	0	0	6.51941E-10	1.94683E-09	2.59877E-09	0.0025988
3965253768589	396525	3768589	0	0	0	0	0	0	5.19536E-05	5.19536E-05	0	0	7.04598E-10	2.10408E-09	2.80868E-09	0.0028087
3965753768589	396575	3768589	0	0	0	0	0	0	5.59488E-05	5.59488E-05	0	0	7.58781E-10	2.26588E-09	3.02466E-09	0.0030247
3966253768589	396625	3768589	0	0	0	0	0	0	5.89955E-05	5.89955E-05	0	0	8.001E-10	2.38927E-09	3.18937E-09	0.0031894
3968253768589	396825	3768589	0	0	0	0	0	0	9.33445E-05	9.33445E-05	0	0	1.26594E-09	3.78037E-09	5.04632E-09	0.0050463
3968753768589	396875	3768589	0	0	0	0	0	0	0.000104936	0.000104936	0	0	1.42315E-09	4.24983E-09	5.67298E-09	0.005673
3969253768589	396925	3768589	0	0	0	0	0	0	0.000118168	0.000118168	0	0	1.6026E-09	4.78569E-09	6.38829E-09	0.0063883
3969753768589	396975	3768589	0	0	0	0	0	0	0.000135089	0.000135089	0	0	1.83209E-09	5.47099E-09	7.30308E-09	0.0073031
3970253768589	397025	3768589	0	0	0	0	0	0	0.000155049	0.000155049	0	0	2.10278E-09	6.27935E-09	8.38213E-09	0.0083821
3970753768589	397075	3768589	0	0	0	0	0	0	0.000178088	0.000178088	0	0	2.41523E-09	7.2124E-09	9.62763E-09	0.0096276
3971253768589	397125	3768589	0	0	0	0	0	0	0.00020779	0.00020779	0	0	2.81806E-09	8.41533E-09	1.12334E-08	0.0112334
3971753768589	397175	3768589	0	0	0	0	0	0	0.000242606	0.000242606	0	0	3.29023E-09	9.82532E-09	1.31156E-08	0.0131156
3972253768589	397225	3768589	0	0	0	0	0	0	0.000282405	0.000282405	0	0	3.82999E-09	1.14372E-08	1.52671E-08	0.0152671
3972753768589	397275	3768589	0	0	0	0	0	0	0.000327485	0.000327485	0	0	4.44138E-09	1.32629E-08	1.77043E-08	0.0177043
3973253768589	397325	3768589	0	0	0	0	0	0	0.000376875	0.000376875	0	0	5.1112E-09	1.52631E-08	2.03743E-08	0.0203743
3973753768589	397375	3768589	0	0	0	0	0	0	0.000420324	0.000420324	0	0	5.70045E-09	1.70227E-08	2.27232E-08	0.0227232
3974253768589	397425	3768589	0	0	0	0	0	0	0.000439512	0.000439512	0	0	5.96068E-09	1.77999E-08	2.37605E-08	0.0237605
3974753768589	397475	3768589	0	0	0	0	0	0	0.000453001	0.000453001	0	0	6.14362E-09	1.83461E-08	2.44898E-08	0.0244898
3975253768589	397525	3768589	0	0	0	0	0	0	0.000453025	0.000453025	0	0	6.14395E-09	1.83471E-08	2.44911E-08	0.0244911
3964253768639	396425	3768639	0	0	0	0	0	0	4.08523E-05	4.08523E-05	0	0	5.54041E-10	1.65448E-09	2.20852E-09	0.0022085
3964753768639	396475	3768639	0	0	0	0	0	0	4.63346E-05	4.63346E-05	0	0	6.28393E-10	1.87651E-09	2.50491E-09	0.0025049
3965253768639	396525	3768639	0	0	0	0	0	0	4.80227E-05	4.80227E-05	0	0	6.51287E-10	1.94488E-09	2.59617E-09	0.0025962
3965753768639	396575	3768639	0	0	0	0	0	0	5.36015E-05	5.36015E-05	0	0	7.26947E-10	2.17082E-09	2.89776E-09	0.0028978
3966253768639	396625	3768639	0	0	0	0	0	0	5.86176E-05	5.86176E-05	0	0	7.94976E-10	2.37396E-09	3.16894E-09	0.0031689
3966753768639	396675	3768639	0	0	0	0	0	0	6.45501E-05	6.45501E-05	0	0	8.75433E-10	2.61423E-09	3.48966E-09	0.0034897
3967253768639	396725	3768639	0	0	0	0	0	0	7.11338E-05	7.11338E-05	0	0	9.6472E-10	2.88086E-09	3.84558E-09	0.0038456
3967753768639	396775	3768639	0	0	0	0	0	0	7.85454E-05	7.85454E-05	0	0	1.06524E-09	3.18102E-09	4.24626E-09	0.0042463
3968253768639	396825	3768639	0	0	0	0	0	0	8.72191E-05	8.72191E-05	0	0	1.18287E-09	3.5323E-09	4.71517E-09	0.0047152
3968753768639	396875	3768639	0	0	0	0	0	0	9.72593E-05	9.72593E-05	0	0	1.31904E-09	3.93892E-09	5.25796E-09	0.005258
3969253768639	396925	3768639	0	0	0	0	0	0	0.000108988	0.000108988	0	0	1.4781E-09	4.41391E-09	5.892E-09	0.005892
3969753768639	396975	3768639	0	0	0	0	0	0	0.000123264	0.000123264	0	0	1.67172E-09	4.9921E-09	6.66381E-09	0.0066638
3970253768639	397025	3768639	0	0	0	0	0	0	0.000139864	0.000139864	0	0	1.89684E-09	5.66437E-09	7.56122E-09	0.0075612
3970753768639	397075	3768639	0	0	0	0	0	0	0.000158586	0.000158586	0	0	2.15075E-09	6.4226E-09	8.57335E-09	0.0085733
3971253768639	397125	3768639	0	0	0	0	0	0	0.000179181	0.000179181	0	0	2.43006E-09	7.25668E-09	9.68674E-09	0.0096867
3971753768639	397175	3768639	0	0	0	0	0	0	0.000208779	0.000208779	0	0	2.83147E-09	8.45538E-09	1.12869E-08	0.0112869
3972253768639	397225	3768639	0	0	0	0	0	0	0.000239816	0.000239816	0	0	3.2524E-09	9.71235E-09	1.29648E-08	0.0129648
3972753768639	397275	3768639	0	0	0	0	0	0	0.000274495	0.000274495	0	0	3.72271E-09	1.11168E-08	1.48395E-08	0.0148395
3973253768639	397325	3768639	0	0	0	0	0	0	0.000310564	0.000310564	0	0	4.21189E-09	1.25776E-08	1.67895E-08	0.0167895
3973753768639	397375	3768639	0	0	0	0	0	0	0.000342662	0.000342662	0	0	4.64721E-09	1.38775E-08	1.85247E-08	0.0185247
3974253768639	397425	3768639	0	0	0	0	0	0	0.000368281	0.000368281	0	0	4.99465E-09	1.49151E-08	1.99097E-08	0.0199097
3974753768639	397475	3768639	0	0	0	0	0	0	0.000366417	0.000366417	0	0	4.96936E-09	1.48396E-08	1.98089E-08	0.0198089
3975253768639	397525	3768639	0	0	0	0	0	0	0.000370323	0.000370323	0	0	5.02235E-09	1.49978E-08	2.00201E-08	0.0200201
3964253768689	396425	3768689	0	0	0	0	0	0	3.86658E-05	3.86658E-05	0	0	5.24387E-10	1.56593E-09	2.09032E-09	0.0020903
3964753768689	396475	3768689	0	0	0	0	0	0	4.45983E-05	4.45983E-05	0	0	6.04844E-10	1.80619E-09	2.41104E-09	0.002411
3965253768689	396525	3768689	0	0	0	0	0	0	4.80308E-05	4.80308E-05	0	0	6.51396E-10	1.94521E-09	2.5966E-09	0.0025966
3965753768689	396575	3768689	0	0	0	0	0	0	5.19536E-05	5.19536E-05	0	0	7.04598E-10	2.10408E-09	2.80868E-09	0.0028087
3966253768689	396625	3768689	0	0	0	0	0	0	5.63266E-05	5.63266E-05	0	0	7.63905E-10	2.28118E-09	3.04509E-09	0.0030451
3966753768689	396675	3768689	0	0	0	0	0	0	6.13508E-05	6.13508E-05	0	0	8.32043E-10	2.48465E-09	3.3167E-09	0.0033167
3967253768689	396725	3768689	0	0	0	0	0	0	6.70019E-05	6.70019E-05	0	0	9.08684E-10	2.71352E-09	3.62221E-09	0.0036222
3967753768689	396775	3768689	0	0	0	0	0	0	7.35293E-05	7.35293E-05	0	0	9.97208E-10	2.97787E-09	3.97508E-09	0.0039751
3968253768689	396825	3768689	0	0	0	0	0	0	8.10775E-05	8.10775E-05	0	0	1.09958E-09	3.28357E-09	4.38315E-09	0.0043832
3968753768689	396875	3768689	0	0	0	0	0	0	8.99683E-05	8.99683E-05	0	0	1.22015E-09	3.64364E-09	4.86379E-09	0.0048638

Garvey Reservoir Rehab - Mitigated Junction Structure			Demolition - 2025	Demolition - 2026	ite Preparation - 202	te Preparation - 202	Grading - 2025	Grading - 2026	nfrastructure - 202	nfrastructure - 202	Paving - 2025	itectural Coating -	Child Risk			
Unique Identifier	X (UTM)	Y (UTM)	1900	1900	1900	1900	1900	1900	2025	2026	1900	1900	3rd Trimester	0<2	Total	per million
3969253768689	396925	3768689	0	0	0	0	0	0	0.000100153	0.000100153	0	0	1.35828E-09	4.05612E-09	5.4144E-09	0.0054144
3969753768689	396975	3768689	0	0	0	0	0	0	0.000112058	0.000112058	0	0	1.51974E-09	4.53827E-09	6.05801E-09	0.006058
3970253768689	397025	3768689	0	0	0	0	0	0	0.00012603	0.00012603	0	0	1.70922E-09	5.10409E-09	6.81331E-09	0.0068133
3970753768689	397075	3768689	0	0	0	0	0	0	0.000142428	0.000142428	0	0	1.93162E-09	5.76823E-09	7.69985E-09	0.0076998
3971253768689	397125	3768689	0	0	0	0	0	0	0.000158498	0.000158498	0	0	2.14955E-09	6.41902E-09	8.56857E-09	0.0085686
3971753768689	397175	3768689	0	0	0	0	0	0	0.000181464	0.000181464	0	0	2.46102E-09	7.34913E-09	9.81016E-09	0.0098102
3972253768689	397225	3768689	0	0	0	0	0	0	0.000206536	0.000206536	0	0	2.80106E-09	8.36455E-09	1.11656E-08	0.0111656
3972753768689	397275	3768689	0	0	0	0	0	0	0.000232614	0.000232614	0	0	3.15472E-09	9.42066E-09	1.25754E-08	0.0125754
3973253768689	397325	3768689	0	0	0	0	0	0	0.000259615	0.000259615	0	0	3.52092E-09	1.05142E-08	1.40351E-08	0.0140351
3973753768689	397375	3768689	0	0	0	0	0	0	0.000284495	0.000284495	0	0	3.85834E-09	1.15218E-08	1.53801E-08	0.0153801
3974253768689	397425	3768689	0	0	0	0	0	0	0.000304455	0.000304455	0	0	4.12903E-09	1.23302E-08	1.64592E-08	0.0164592
3974753768689	397475	3768689	0	0	0	0	0	0	0.000317292	0.000317292	0	0	4.30314E-09	1.28501E-08	1.71532E-08	0.0171532
3975253768689	397525	3768689	0	0	0	0	0	0	0.000321424	0.000321424	0	0	4.35918E-09	1.30174E-08	1.73766E-08	0.0173766

Garvey Reservoir Rehab - Mitigated Junction Structure

Offroad DPM Emissions, Ground Level Concentrations and Health Risk Calculations

Residential Receptors

Phase	Year	Emissions (lbs/day)	Meters	lbs/meter	meters (h1)	lbs/day (H1)	g/s (H1)	meters (h2)	lbs/day (H2)	g/s (H2)	hrs/day
Demolition - 2025	1900		1932.1	0	691.2	0	0	1240.9	0	0	10.00
Demolition - 2026	1900		1932.1	0	691.2	0	0	1240.9	0	0	10.00
Site Preparation - 2025	1900		1932.1	0	691.2	0	0	1240.9	0	0	10.00
Site Preparation - 2026	1900		1932.1	0	691.2	0	0	1240.9	0	0	10.00
Grading - 2025	1900		1932.1	0	691.2	0	0	1240.9	0	0	10.00
Grading - 2026	1900		1932.1	0	691.2	0	0	1240.9	0	0	10.00
Infrastructure - 2025	2025		1932.1	0	691.2	0	0	1240.9	0	0	10.00
Infrastructure - 2026	2026	0.0100	1932.1	5.17572E-06	691.2	0.003577455	4.50749E-05	1240.9	0.006422545	8.09223E-05	10.00
Paving - 2025	1900	0.0100	1932.1	5.17572E-06	691.2	0.003577455	4.50749E-05	1240.9	0.006422545	8.09223E-05	10.00
Architectural Coating - 2026	1900		1932.1	0	691.2	0	0	1240.9	0	0	10.00

		AERMOD Column Identifier:	*5*	*5*	*5*	*5*	*5*	*5*	*5*	*5*	*5*	*5*				
			6	*6*	*6*	*6*	*6*	*6*	*6*	*6*	*6*	*6*			*MAX:*	0.046037
Garvey Reservoir Rehab - Mitigated Junction Structure			Demolition - 2025	Demolition - 2026	Site Preparation - 2025	te Preparation - 202	Grading - 2025	Grading - 2026	Infrastructure - 2025	nfrastructure - 2026	Paving - 2025	rchitectural Coating - 202	Child Risk			
Unique Identifier	X (UTM)	Y (UTM)	1900	1900	1900	1900	1900	1900	2025	2026	1900	1900	3rd Trimester	0<2	Total	per million
396166.283767377.2	396166.28	3767377	0	0	0	0	0	0	0	3.83011E-06	3.83011E-06	0	1.71245E-11	1.55116E-10	1.72241E-10	0.0001722
396266.283767377.2	396266.28	3767377	0	0	0	0	0	0	0	3.91694E-06	3.91694E-06	0	1.75127E-11	1.58633E-10	1.76146E-10	0.0001761
396366.283767377.2	396366.28	3767377	0	0	0	0	0	0	0	4.07625E-06	4.07625E-06	0	1.82249E-11	1.65085E-10	1.8331E-10	0.0001833
396466.283767377.2	396466.28	3767377	0	0	0	0	0	0	0	4.18245E-06	4.18245E-06	0	1.86998E-11	1.69386E-10	1.88086E-10	0.0001881
396566.283767377.2	396566.28	3767377	0	0	0	0	0	0	0	4.58512E-06	4.58512E-06	0	2.05001E-11	1.85693E-10	2.06193E-10	0.0002062
396666.283767377.2	396666.28	3767377	0	0	0	0	0	0	0	4.33497E-06	4.33497E-06	0	1.93817E-11	1.75563E-10	1.94944E-10	0.0001949
396766.283767377.2	396766.28	3767377	0	0	0	0	0	0	0	4.31797E-06	4.31797E-06	0	1.93057E-11	1.74874E-10	1.9418E-10	0.0001942
396866.283767377.2	396866.28	3767377	0	0	0	0	0	0	0	4.32176E-06	4.32176E-06	0	1.93226E-11	1.75027E-10	1.9435E-10	0.0001944
396966.283767377.2	396966.28	3767377	0	0	0	0	0	0	0	4.37894E-06	4.37894E-06	0	1.95783E-11	1.77343E-10	1.96922E-10	0.0001969
397066.283767377.2	397066.28	3767377	0	0	0	0	0	0	0	4.26851E-06	4.26851E-06	0	1.90845E-11	1.72871E-10	1.91956E-10	0.000192
397166.283767377.2	397166.28	3767377	0	0	0	0	0	0	0	4.21012E-06	4.21012E-06	0	1.88235E-11	1.70506E-10	1.8933E-10	0.0001893
397266.283767377.2	397266.28	3767377	0	0	0	0	0	0	0	4.2152E-06	4.2152E-06	0	1.88462E-11	1.70712E-10	1.89558E-10	0.0001896
397366.283767377.2	397366.28	3767377	0	0	0	0	0	0	0	4.02305E-06	4.02305E-06	0	1.79871E-11	1.6293E-10	1.80917E-10	0.0001809
397466.283767377.2	397466.28	3767377	0	0	0	0	0	0	0	3.62179E-06	3.62179E-06	0	1.6193E-11	1.46679E-10	1.62872E-10	0.0001629
397566.283767377.2	397566.28	3767377	0	0	0	0	0	0	0	3.56251E-06	3.56251E-06	0	1.5928E-11	1.44279E-10	1.60206E-10	0.0001602
397666.283767377.2	397666.28	3767377	0	0	0	0	0	0	0	3.45794E-06	3.45794E-06	0	1.54605E-11	1.40043E-10	1.55504E-10	0.0001555
397766.283767377.2	397766.28	3767377	0	0	0	0	0	0	0	3.56871E-06	3.56871E-06	0	1.59557E-11	1.4453E-10	1.60486E-10	0.0001605
397866.283767377.2	397866.28	3767377	0	0	0	0	0	0	0	3.39922E-06	3.39922E-06	0	1.51979E-11	1.37665E-10	1.52863E-10	0.0001529
396166.283767477.2	396166.28	3767477	0	0	0	0	0	0	0	4.40759E-06	4.40759E-06	0	1.97064E-11	1.78504E-10	1.9821E-10	0.0001982
396266.283767477.2	396266.28	3767477	0	0	0	0	0	0	0	4.30668E-06	4.30668E-06	0	1.92552E-11	1.74417E-10	1.93672E-10	0.0001937
396366.283767477.2	396366.28	3767477	0	0	0	0	0	0	0	4.53722E-06	4.53722E-06	0	2.02859E-11	1.83753E-10	2.04039E-10	0.000204
396466.283767477.2	396466.28	3767477	0	0	0	0	0	0	0	4.96939E-06	4.96939E-06	0	2.22182E-11	2.01256E-10	2.23474E-10	0.0002235
396566.283767477.2	396566.28	3767477	0	0	0	0	0	0	0	5.03692E-06	5.03692E-06	0	2.25201E-11	2.03991E-10	2.26511E-10	0.0002265
396666.283767477.2	396666.28	3767477	0	0	0	0	0	0	0	4.89066E-06	4.89066E-06	0	2.18662E-11	1.98068E-10	2.19934E-10	0.0002199
396766.283767477.2	396766.28	3767477	0	0	0	0	0	0	0	4.92892E-06	4.92892E-06	0	2.20372E-11	1.99617E-10	2.21654E-10	0.0002217
396866.283767477.2	396866.28	3767477	0	0	0	0	0	0	0	4.9577E-06	4.9577E-06	0	2.21659E-11	2.00783E-10	2.22948E-10	0.0002229
396966.283767477.2	396966.28	3767477	0	0	0	0	0	0	0	5.0315E-06	5.0315E-06	0	2.24959E-11	2.03771E-10	2.26267E-10	0.0002263
397066.283767477.2	397066.28	3767477	0	0	0	0	0	0	0	4.93481E-06	4.93481E-06	0	2.20636E-11	1.99856E-10	2.21919E-10	0.0002219
397166.283767477.2	397166.28	3767477	0	0	0	0	0	0	0	4.77938E-06	4.77938E-06	0	2.13687E-11	1.93561E-10	2.1493E-10	0.0002149
397266.283767477.2	397266.28	3767477	0	0	0	0	0	0	0	4.79518E-06	4.79518E-06	0	2.14393E-11	1.94201E-10	2.1564E-10	0.0002156
397366.283767477.2	397366.28	3767477	0	0	0	0	0	0	0	4.65093E-06	4.65093E-06	0	2.07943E-11	1.88359E-10	2.09153E-10	0.0002092
397466.283767477.2	397466.28	3767477	0	0	0	0	0	0	0	4.19494E-06	4.19494E-06	0	1.87556E-11	1.69892E-10	1.88647E-10	0.0001886
397566.283767477.2	397566.28	3767477	0	0	0	0	0	0	0	3.9783E-06	3.9783E-06	0	1.7787E-11	1.61118E-10	1.78905E-10	0.0001789
397666.283767477.2	397666.28	3767477	0	0	0	0	0	0	0	3.89105E-06	3.89105E-06	0	1.73969E-11	1.57584E-10	1.74981E-10	0.000175
397766.283767477.2	397766.28	3767477	0	0	0	0	0	0	0	3.79864E-06	3.79864E-06	0	1.69837E-11	1.53842E-10	1.70825E-10	0.0001708
397866.283767477.2	397866.28	3767477	0	0	0	0	0	0	0	3.65582E-06	3.65582E-06	0	1.63452E-11	1.48057E-10	1.64403E-10	0.0001644
396166.283767577.2	396166.28	3767577	0	0	0	0	0	0	0	4.64617E-06	4.64617E-06	0	2.0773E-11	1.88166E-10	2.08939E-10	0.0002089
396266.283767577.2	396266.28	3767577	0	0	0	0	0	0	0	4.77621E-06	4.77621E-06	0	2.13545E-11	1.93432E-10	2.14787E-10	0.0002148
396366.283767577.2	396366.28	3767577	0	0	0	0	0	0	0	4.99528E-06	4.99528E-06	0	2.23339E-11	2.02305E-10	2.24639E-10	0.0002246
396466.283767577.2	396466.28	3767577	0	0	0	0	0	0	0	5.30423E-06	5.30423E-06	0	2.37153E-11	2.14817E-10	2.38532E-10	0.0002385
396566.283767577.2	396566.28	3767577	0	0	0	0	0	0	0	5.89209E-06	5.89209E-06	0	2.63436E-11	2.38625E-10	2.64968E-10	0.000265
396666.283767577.2	396666.28	3767577	0	0	0	0	0	0	0	5.9828E-06	5.9828E-06	0	2.67491E-11	2.42298E-10	2.69047E-10	0.000269
396766.283767577.2	396766.28	3767577	0	0	0	0	0	0	0	5.64161E-06	5.64161E-06	0	2.52237E-11	2.28481E-10	2.53704E-10	0.0002537
396866.283767577.2	396866.28	3767577	0	0	0	0	0	0	0	5.78386E-06	5.78386E-06	0	2.58597E-11	2.34241E-10	2.60101E-10	0.0002601

Garvey Reservoir Rehab - Mitigated Junction Structure			Demolition - 2025	Demolition - 2026	Site Preparation - 2025	ite Preparation - 202	Grading - 2025	Grading - 2026	Infrastructure - 2025	nfrastructure - 2026	Paving - 2025	rchitectural Coating - 202	Child Risk			
Unique Identifier	X (UTM)	Y (UTM)	1900	1900	1900	1900	1900	1900	2025	2026	1900	1900	3rd Trimester	0<2	Total	per million
396966.283767577.2	396966.28	3767577	0	0	0	0	0	0	0	5.86296E-06	5.86296E-06	0	2.62133E-11	2.37445E-10	2.63658E-10	0.0002637
397066.283767577.2	397066.28	3767577	0	0	0	0	0	0	0	5.86437E-06	5.86437E-06	0	2.62196E-11	2.37502E-10	2.63722E-10	0.0002637
397166.283767577.2	397166.28	3767577	0	0	0	0	0	0	0	5.64799E-06	5.64799E-06	0	2.52522E-11	2.28739E-10	2.53991E-10	0.000254
397266.283767577.2	397266.28	3767577	0	0	0	0	0	0	0	5.57311E-06	5.57311E-06	0	2.49174E-11	2.25706E-10	2.50624E-10	0.0002506
397366.283767577.2	397366.28	3767577	0	0	0	0	0	0	0	5.43422E-06	5.43422E-06	0	2.42964E-11	2.20081E-10	2.44378E-10	0.0002444
397466.283767577.2	397466.28	3767577	0	0	0	0	0	0	0	4.84076E-06	4.84076E-06	0	2.16431E-11	1.96047E-10	2.1769E-10	0.0002177
397566.283767577.2	397566.28	3767577	0	0	0	0	0	0	0	4.56601E-06	4.56601E-06	0	2.04147E-11	1.84919E-10	2.05334E-10	0.0002053
397666.283767577.2	397666.28	3767577	0	0	0	0	0	0	0	4.31766E-06	4.31766E-06	0	1.93043E-11	1.74862E-10	1.94166E-10	0.0001942
397766.283767577.2	397766.28	3767577	0	0	0	0	0	0	0	4.15353E-06	4.15353E-06	0	1.85705E-11	1.68214E-10	1.86785E-10	0.0001868
397866.283767577.2	397866.28	3767577	0	0	0	0	0	0	0	3.94844E-06	3.94844E-06	0	1.76535E-11	1.59909E-10	1.77562E-10	0.0001776
396166.283767677.2	396166.28	3767677	0	0	0	0	0	0	0	5.62549E-06	5.62549E-06	0	2.51516E-11	2.27827E-10	2.52979E-10	0.000253
396266.283767677.2	396266.28	3767677	0	0	0	0	0	0	0	5.32253E-06	5.32253E-06	0	2.37971E-11	2.15558E-10	2.39355E-10	0.0002394
396366.283767677.2	396366.28	3767677	0	0	0	0	0	0	0	5.67165E-06	5.67165E-06	0	2.5358E-11	2.29697E-10	2.55055E-10	0.0002551
396466.283767677.2	396466.28	3767677	0	0	0	0	0	0	0	6.70851E-06	6.70851E-06	0	2.99938E-11	2.71689E-10	3.01683E-10	0.0003017
396566.283767677.2	396566.28	3767677	0	0	0	0	0	0	0	6.76935E-06	6.76935E-06	0	3.02658E-11	2.74153E-10	3.04419E-10	0.0003044
396666.283767677.2	396666.28	3767677	0	0	0	0	0	0	0	6.34121E-06	6.34121E-06	0	2.83516E-11	2.56814E-10	2.85165E-10	0.0002852
396766.283767677.2	396766.28	3767677	0	0	0	0	0	0	0	6.60139E-06	6.60139E-06	0	2.95149E-11	2.67351E-10	2.96866E-10	0.0002969
396866.283767677.2	396866.28	3767677	0	0	0	0	0	0	0	6.97234E-06	6.97234E-06	0	3.11734E-11	2.82374E-10	3.13547E-10	0.0003135
396966.283767677.2	396966.28	3767677	0	0	0	0	0	0	0	7.04825E-06	7.04825E-06	0	3.15128E-11	2.85448E-10	3.16961E-10	0.000317
397066.283767677.2	397066.28	3767677	0	0	0	0	0	0	0	7.02703E-06	7.02703E-06	0	3.14179E-11	2.84589E-10	3.16007E-10	0.000316
397166.283767677.2	397166.28	3767677	0	0	0	0	0	0	0	6.87159E-06	6.87159E-06	0	3.07229E-11	2.78294E-10	3.09017E-10	0.000309
397266.283767677.2	397266.28	3767677	0	0	0	0	0	0	0	6.30158E-06	6.30158E-06	0	2.81744E-11	2.55209E-10	2.83383E-10	0.0002834
397366.283767677.2	397366.28	3767677	0	0	0	0	0	0	0	6.41003E-06	6.41003E-06	0	2.86593E-11	2.59601E-10	2.8826E-10	0.0002883
397466.283767677.2	397466.28	3767677	0	0	0	0	0	0	0	5.51298E-06	5.51298E-06	0	2.46486E-11	2.23271E-10	2.47919E-10	0.0002479
397566.283767677.2	397566.28	3767677	0	0	0	0	0	0	0	5.28934E-06	5.28934E-06	0	2.36487E-11	2.14214E-10	2.37862E-10	0.0002379
397666.283767677.2	397666.28	3767677	0	0	0	0	0	0	0	4.98117E-06	4.98117E-06	0	2.22709E-11	2.01733E-10	2.24004E-10	0.000224
397766.283767677.2	397766.28	3767677	0	0	0	0	0	0	0	4.64986E-06	4.64986E-06	0	2.07895E-11	1.88315E-10	2.09105E-10	0.0002091
397866.283767677.2	397866.28	3767677	0	0	0	0	0	0	0	4.42501E-06	4.42501E-06	0	1.97843E-11	1.79209E-10	1.98994E-10	0.000199
396166.283767777.2	396166.28	3767777	0	0	0	0	0	0	0	6.31355E-06	6.31355E-06	0	2.82279E-11	2.55694E-10	2.83921E-10	0.0002839
396266.283767777.2	396266.28	3767777	0	0	0	0	0	0	0	7.17219E-06	7.17219E-06	0	3.20669E-11	2.90468E-10	3.22535E-10	0.0003225
396366.283767777.2	396366.28	3767777	0	0	0	0	0	0	0	6.98034E-06	6.98034E-06	0	3.12091E-11	2.82698E-10	3.13907E-10	0.0003139
396466.283767777.2	396466.28	3767777	0	0	0	0	0	0	0	7.36938E-06	7.36938E-06	0	3.29486E-11	2.98454E-10	3.31402E-10	0.0003314
396566.283767777.2	396566.28	3767777	0	0	0	0	0	0	0	6.97725E-06	6.97725E-06	0	3.11953E-11	2.82573E-10	3.13768E-10	0.0003138
396666.283767777.2	396666.28	3767777	0	0	0	0	0	0	0	7.33794E-06	7.33794E-06	0	3.2808E-11	2.97181E-10	3.29989E-10	0.00033
396766.283767777.2	396766.28	3767777	0	0	0	0	0	0	0	8.04307E-06	8.04307E-06	0	3.59606E-11	3.25738E-10	3.61698E-10	0.0003617
396866.283767777.2	396866.28	3767777	0	0	0	0	0	0	0	8.58934E-06	8.58934E-06	0	3.8403E-11	3.47861E-10	3.86264E-10	0.0003863
396966.283767777.2	396966.28	3767777	0	0	0	0	0	0	0	8.48403E-06	8.48403E-06	0	3.79322E-11	3.43596E-10	3.81528E-10	0.0003815
397066.283767777.2	397066.28	3767777	0	0	0	0	0	0	0	8.49567E-06	8.49567E-06	0	3.79842E-11	3.44067E-10	3.82052E-10	0.0003821
397166.283767777.2	397166.28	3767777	0	0	0	0	0	0	0	8.50727E-06	8.50727E-06	0	3.80361E-11	3.44537E-10	3.82573E-10	0.0003826
397266.283767777.2	397266.28	3767777	0	0	0	0	0	0	0	7.91515E-06	7.91515E-06	0	3.53887E-11	3.20557E-10	3.55945E-10	0.0003559
397366.283767777.2	397366.28	3767777	0	0	0	0	0	0	0	7.76167E-06	7.76167E-06	0	3.47025E-11	3.14341E-10	3.49043E-10	0.000349
397466.283767777.2	397466.28	3767777	0	0	0	0	0	0	0	6.69808E-06	6.69808E-06	0	2.99472E-11	2.71267E-10	3.01214E-10	0.0003012
397566.283767777.2	397566.28	3767777	0	0	0	0	0	0	0	6.17864E-06	6.17864E-06	0	2.76248E-11	2.5023E-10	2.77855E-10	0.0002779
397666.283767777.2	397666.28	3767777	0	0	0	0	0	0	0	5.88008E-06	5.88008E-06	0	2.62899E-11	2.38138E-10	2.64428E-10	0.0002644
397766.283767777.2	397766.28	3767777	0	0	0	0	0	0	0	5.25012E-06	5.25012E-06	0	2.34733E-11	2.12626E-10	2.36099E-10	0.0002361
397866.283767777.2	397866.28	3767777	0	0	0	0	0	0	0	4.7865E-06	4.7865E-06	0	2.14005E-11	1.93849E-10	2.1525E-10	0.0002152
396166.283767877.2	396166.28	3767877	0	0	0	0	0	0	0	6.97761E-06	6.97761E-06	0	3.1197E-11	2.82587E-10	3.13784E-10	0.0003138
396266.283767877.2	396266.28	3767877	0	0	0	0	0	0	0	8.05927E-06	8.05927E-06	0	3.6033E-11	3.26393E-10	3.62427E-10	0.0003624
396366.283767877.2	396366.28	3767877	0	0	0	0	0	0	0	8.5193E-06	8.5193E-06	0	3.80898E-11	3.45024E-10	3.83114E-10	0.0003831
396466.283767877.2	396466.28	3767877	0	0	0	0	0	0	0	8.08394E-06	8.08394E-06	0	3.61434E-11	3.27393E-10	3.63536E-10	0.0003635
396566.283767877.2	396566.28	3767877	0	0	0	0	0	0	0	8.00101E-06	8.00101E-06	0	3.57726E-11	3.24034E-10	3.59807E-10	0.0003598
397466.283767877.2	397466.28	3767877	0	0	0	0	0	0	0	9.38054E-06	9.38054E-06	0	4.19405E-11	3.79904E-10	4.21844E-10	0.0004218
397566.283767877.2	397566.28	3767877	0	0	0	0	0	0	0	7.38854E-06	7.38854E-06	0	3.30342E-11	2.9923E-10	3.32264E-10	0.0003323
397666.283767877.2	397666.28	3767877	0	0	0	0	0	0	0	6.22835E-06	6.22835E-06	0	2.7847E-11	2.52243E-10	2.8009E-10	0.0002801
397766.283767877.2	397766.28	3767877	0	0	0	0	0	0	0	5.51313E-06	5.51313E-06	0	2.46493E-11	2.23277E-10	2.47927E-10	0.0002479
397866.283767877.2	397866.28	3767877	0	0	0	0	0	0	0	5.52227E-06	5.52227E-06	0	2.46901E-11	2.23647E-10	2.48338E-10	0.0002483
396166.283767977.2	396166.28	3767977	0	0	0	0	0	0	0	7.31371E-06	7.31371E-06	0	3.26996E-11	2.96199E-10	3.28899E-10	0.0003289
396266.283767977.2	396266.28	3767977	0	0	0	0	0	0	0	8.45174E-06	8.45174E-06	0	3.77878E-11	3.42288E-10	3.80076E-10	0.0003801
396366.283767977.2	396366.28	3767977	0	0	0	0	0	0	0	9.14145E-06	9.14145E-06	0	4.08715E-11	3.70221E-10	4.11093E-10	0.0004111
396466.283767977.2	396466.28	3767977	0	0	0	0	0	0	0	8.78313E-06	8.78313E-06	0	3.92694E-11	3.55709E-10	3.94979E-10	0.000395
397466.283767977.2	397466.28	3767977	0	0	0	0	0	0	0	1.10631E-05	1.10631E-05	0	4.94633E-11	4.48047E-10	4.97511E-10	0.0004975
397566.283767977.2	397566.28	3767977	0	0	0	0	0	0	0	8.93416E-06	8.93416E-06	0	3.99447E-11	3.61826E-10	4.01771E-10	0.0004018
397666.283767977.2	397666.28	3767977	0	0	0	0	0	0	0	7.41573E-06	7.41573E-06	0	3.31558E-11	3.00331E-10	3.33487E-10	0.0003335
397766.283767977.2	397766.28	3767977	0	0	0	0	0	0	0	7.47003E-06	7.47003E-06	0	3.33986E-11	3.0253E-10	3.35929E-10	0.0003359
397866.283767977.2	397866.28	3767977	0	0	0	0	0	0	0	6.83119E-06	6.83119E-06	0	3.05423E-11	2.76658E-10	3.072E-10	0.0003072
396166.283768077.2	396166.28	3768077	0	0	0	0	0	0	0	9.85953E-06	9.85953E-06	0	4.4082E-11	3.99302E-10	4.43384E-10	0.0004434
396266.283768077.2	396266.28	3768077	0	0	0	0	0	0	0	9.34415E-06	9.34415E-06	0	4.17778E-11	3.7843E-10	4.20208E-10	0.0004202
396366.283768077.2	396366.28	3768077	0	0	0	0	0	0	0	1.014E-05	1.014E-05	0	4.53362E-11	4.10663E-10	4.55999E-10	0.000456
396466.283768077.2	396466.28	3768077	0	0	0	0	0	0	0	1.09769E-05	1.09769E-05	0	4.90777E-11	4.44554E-10	4.93632E-10	0.0004936
397466.283768077.2	397466.28	3768077	0	0	0	0	0	0	0	1.91987E-05	1.91987E-05	0	8.58375E-11	7.77531E-10	8.63369E-10	0.0008634
397566.283768077.2	397566.28	3768077	0	0	0	0	0	0	0	1.51719E-05	1.51719E-05	0	6.78339E-11	6.14451E-10	6.82285E-10	0.0006823

Garvey Reservoir Rehab - Mitigated Junction Structure			Demolition - 2025	Demolition - 2026	Site Preparation - 2025	ite Preparation - 202	Grading - 2025	Grading - 2026	Infrastructure - 2025	nfrastructure - 2026	Paving - 2025	rchitectural Coating - 202	Child Risk			
Unique Identifier	X (UTM)	Y (UTM)	1900	1900	1900	1900	1900	1900	2025	2026	1900	1900	3rd Trimester	0<2	Total	per million
397666.283768077.2	397666.28	3768077	0	0	0	0	0	0	0	1.13827E-05	1.13827E-05	0	5.08921E-11	4.6099E-10	5.11882E-10	0.0005119
397766.283768077.2	397766.28	3768077	0	0	0	0	0	0	0	8.88752E-06	8.88752E-06	0	3.97362E-11	3.59937E-10	3.99673E-10	0.0003997
397866.283768077.2	397866.28	3768077	0	0	0	0	0	0	0	7.70344E-06	7.70344E-06	0	3.44421E-11	3.11983E-10	3.46425E-10	0.0003464
396166.283768177.2	396166.28	3768177	0	0	0	0	0	0	0	1.18911E-05	1.18911E-05	0	5.3165E-11	4.81578E-10	5.34743E-10	0.0005347
396266.283768177.2	396266.28	3768177	0	0	0	0	0	0	0	1.22816E-05	1.22816E-05	0	5.49113E-11	4.97396E-10	5.52307E-10	0.0005523
396366.283768177.2	396366.28	3768177	0	0	0	0	0	0	0	1.337E-05	1.337E-05	0	5.97773E-11	5.41473E-10	6.01251E-10	0.0006013
396466.283768177.2	396466.28	3768177	0	0	0	0	0	0	0	1.31649E-05	1.31649E-05	0	5.88603E-11	5.33166E-10	5.92027E-10	0.000592
397466.283768177.2	397466.28	3768177	0	0	0	0	0	0	0	4.19871E-05	4.19871E-05	0	1.87725E-10	1.70044E-09	1.88817E-09	0.0018882
397566.283768177.2	397566.28	3768177	0	0	0	0	0	0	0	2.20253E-05	2.20253E-05	0	9.84753E-11	8.92006E-10	9.90481E-10	0.0009905
397666.283768177.2	397666.28	3768177	0	0	0	0	0	0	0	1.50304E-05	1.50304E-05	0	6.72011E-11	6.08719E-10	6.7592E-10	0.0006759
397766.283768177.2	397766.28	3768177	0	0	0	0	0	0	0	1.10837E-05	1.10837E-05	0	4.95555E-11	4.48882E-10	4.98438E-10	0.0004984
397866.283768177.2	397866.28	3768177	0	0	0	0	0	0	0	9.09468E-06	9.09468E-06	0	4.06624E-11	3.68327E-10	4.08989E-10	0.000409
396166.283768277.2	396166.28	3768277	0	0	0	0	0	0	0	1.41424E-05	1.41424E-05	0	6.32307E-11	5.72754E-10	6.35985E-10	0.000636
396266.283768277.2	396266.28	3768277	0	0	0	0	0	0	0	1.39172E-05	1.39172E-05	0	6.22238E-11	5.63634E-10	6.25858E-10	0.0006259
396366.283768277.2	396366.28	3768277	0	0	0	0	0	0	0	1.56228E-05	1.56228E-05	0	6.98496E-11	6.32709E-10	7.02559E-10	0.0007026
396466.283768277.2	396466.28	3768277	0	0	0	0	0	0	0	1.61667E-05	1.61667E-05	0	7.22815E-11	6.54739E-10	7.2702E-10	0.000727
397366.283768277.2	397366.28	3768277	0	0	0	0	0	0	0	0.000333703	0.000333703	0	1.49199E-09	1.35147E-08	1.50067E-08	0.0150067
397466.283768277.2	397466.28	3768277	0	0	0	0	0	0	0	6.55061E-05	6.55061E-05	0	2.92878E-10	2.65294E-09	2.94582E-09	0.0029458
397566.283768277.2	397566.28	3768277	0	0	0	0	0	0	0	2.99056E-05	2.99056E-05	0	1.33708E-10	1.21115E-09	1.34486E-09	0.0013449
397666.283768277.2	397666.28	3768277	0	0	0	0	0	0	0	1.87384E-05	1.87384E-05	0	8.37795E-11	7.58889E-10	8.42668E-10	0.0008427
397766.283768277.2	397766.28	3768277	0	0	0	0	0	0	0	1.3423E-05	1.3423E-05	0	6.00144E-11	5.43621E-10	6.03635E-10	0.0006036
397866.283768277.2	397866.28	3768277	0	0	0	0	0	0	0	1.03337E-05	1.03337E-05	0	4.62019E-11	4.18505E-10	4.64707E-10	0.0004647
396166.283768377.2	396166.28	3768377	0	0	0	0	0	0	0	1.6667E-05	1.6667E-05	0	7.45182E-11	6.74998E-10	7.49516E-10	0.0007495
396266.283768377.2	396266.28	3768377	0	0	0	0	0	0	0	1.73546E-05	1.73546E-05	0	7.75926E-11	7.02847E-10	7.80439E-10	0.0007804
396366.283768377.2	396366.28	3768377	0	0	0	0	0	0	0	1.93763E-05	1.93763E-05	0	8.66317E-11	7.84725E-10	8.71357E-10	0.0008714
396466.283768377.2	396466.28	3768377	0	0	0	0	0	0	0	2.09048E-05	2.09048E-05	0	9.34655E-11	8.46626E-10	9.40092E-10	0.0009401
397266.283768377.2	397266.28	3768377	0	0	0	0	0	0	0	0.000523875	0.000523875	0	2.34225E-09	2.12165E-08	2.35587E-08	0.0235587
397366.283768377.2	397366.28	3768377	0	0	0	0	0	0	0	0.000235623	0.000235623	0	1.05347E-09	9.54252E-09	1.0596E-08	0.010596
397466.283768377.2	397466.28	3768377	0	0	0	0	0	0	0	7.603E-05	7.603E-05	0	3.39931E-10	3.07915E-09	3.41908E-09	0.0034191
397566.283768377.2	397566.28	3768377	0	0	0	0	0	0	0	3.65004E-05	3.65004E-05	0	1.63194E-10	1.47824E-09	1.64143E-09	0.0016414
397666.283768377.2	397666.28	3768377	0	0	0	0	0	0	0	2.21244E-05	2.21244E-05	0	9.89184E-11	8.9602E-10	9.94938E-10	0.0009949
397766.283768377.2	397766.28	3768377	0	0	0	0	0	0	0	1.55538E-05	1.55538E-05	0	6.95412E-11	6.29916E-10	6.99457E-10	0.0006995
397866.283768377.2	397866.28	3768377	0	0	0	0	0	0	0	1.11884E-05	1.11884E-05	0	5.00235E-11	4.53122E-10	5.03145E-10	0.0005031
396166.283768477.2	396166.28	3768477	0	0	0	0	0	0	0	2.04481E-05	2.04481E-05	0	9.14237E-11	8.28132E-10	9.19555E-10	0.0009196
396266.283768477.2	396266.28	3768477	0	0	0	0	0	0	0	2.20367E-05	2.20367E-05	0	9.85265E-11	8.9247E-10	9.90996E-10	0.000991
396366.283768477.2	396366.28	3768477	0	0	0	0	0	0	0	2.44257E-05	2.44257E-05	0	1.09208E-10	9.89221E-10	1.09843E-09	0.0010984
396466.283768477.2	396466.28	3768477	0	0	0	0	0	0	0	2.73511E-05	2.73511E-05	0	1.22287E-10	1.1077E-09	1.22998E-09	0.00123
397166.283768477.2	397166.28	3768477	0	0	0	0	0	0	0	9.73672E-05	9.73672E-05	0	4.35329E-10	3.94329E-09	4.37862E-09	0.0043786
397266.283768477.2	397266.28	3768477	0	0	0	0	0	0	0	0.000531762	0.000531762	0	2.37751E-09	2.15359E-08	2.39134E-08	0.0239134
397366.283768477.2	397366.28	3768477	0	0	0	0	0	0	0	0.000215441	0.000215441	0	9.63238E-10	8.72518E-09	9.68841E-09	0.0096884
397466.283768477.2	397466.28	3768477	0	0	0	0	0	0	0	7.00666E-05	7.00666E-05	0	3.13268E-10	2.83764E-09	3.15091E-09	0.0031509
397566.283768477.2	397566.28	3768477	0	0	0	0	0	0	0	4.18824E-05	4.18824E-05	0	1.87257E-10	1.6962E-09	1.88346E-09	0.0018835
397666.283768477.2	397666.28	3768477	0	0	0	0	0	0	0	2.59892E-05	2.59892E-05	0	1.16198E-10	1.05254E-09	1.16874E-09	0.0011687
397766.283768477.2	397766.28	3768477	0	0	0	0	0	0	0	1.64422E-05	1.64422E-05	0	7.35134E-11	6.65897E-10	7.3941E-10	0.0007394
397866.283768477.2	397866.28	3768477	0	0	0	0	0	0	0	1.28178E-05	1.28178E-05	0	5.73085E-11	5.1911E-10	5.76419E-10	0.0005764
396166.283768577.2	396166.28	3768577	0	0	0	0	0	0	0	2.60193E-05	2.60193E-05	0	1.16332E-10	1.05376E-09	1.17009E-09	0.0011701
396266.283768577.2	396266.28	3768577	0	0	0	0	0	0	0	2.93301E-05	2.93301E-05	0	1.31135E-10	1.18784E-09	1.31898E-09	0.001319
396366.283768577.2	396366.28	3768577	0	0	0	0	0	0	0	3.16434E-05	3.16434E-05	0	1.41478E-10	1.28153E-09	1.42301E-09	0.001423
396466.283768577.2	396466.28	3768577	0	0	0	0	0	0	0	3.79976E-05	3.79976E-05	0	1.69888E-10	1.53887E-09	1.70876E-09	0.0017088
396566.283768577.2	396566.28	3768577	0	0	0	0	0	0	0	3.72132E-05	3.72132E-05	0	1.6638E-10	1.5071E-09	1.67348E-09	0.0016735
396866.283768577.2	396866.28	3768577	0	0	0	0	0	0	0	4.76217E-05	4.76217E-05	0	2.12917E-10	1.92864E-09	2.14156E-09	0.0021416
396966.283768577.2	396966.28	3768577	0	0	0	0	0	0	0	5.52952E-05	5.52952E-05	0	2.47225E-10	2.23941E-09	2.48663E-09	0.0024866
397066.283768577.2	397066.28	3768577	0	0	0	0	0	0	0	6.83391E-05	6.83391E-05	0	3.05545E-10	2.76768E-09	3.07322E-09	0.0030732
397166.283768577.2	397166.28	3768577	0	0	0	0	0	0	0	0.000117007	0.000117007	0	5.23138E-10	4.73868E-09	5.26181E-09	0.0052618
397266.283768577.2	397266.28	3768577	0	0	0	0	0	0	0	0.000515848	0.000515848	0	2.30636E-09	2.08914E-08	2.31978E-08	0.0231978
397366.283768577.2	397366.28	3768577	0	0	0	0	0	0	0	0.000216068	0.000216068	0	9.6604E-10	8.75055E-09	9.71659E-09	0.0097166
397466.283768577.2	397466.28	3768577	0	0	0	0	0	0	0	6.92328E-05	6.92328E-05	0	3.0954E-10	2.80387E-09	3.11341E-09	0.0031134
397566.283768577.2	397566.28	3768577	0	0	0	0	0	0	0	4.14429E-05	4.14429E-05	0	1.85292E-10	1.6784E-09	1.86369E-09	0.0018637
397666.283768577.2	397666.28	3768577	0	0	0	0	0	0	0	2.75516E-05	2.75516E-05	0	1.23184E-10	1.11582E-09	1.239E-09	0.001239
397766.283768577.2	397766.28	3768577	0	0	0	0	0	0	0	1.96067E-05	1.96067E-05	0	8.76616E-11	7.94054E-10	8.81715E-10	0.0008817
397866.283768577.2	397866.28	3768577	0	0	0	0	0	0	0	1.43156E-05	1.43156E-05	0	6.40052E-11	5.7977E-10	6.43776E-10	0.0006438
396166.283768677.2	396166.28	3768677	0	0	0	0	0	0	0	4.57094E-05	4.57094E-05	0	2.04367E-10	1.85119E-09	2.05556E-09	0.0020556
396266.283768677.2	396266.28	3768677	0	0	0	0	0	0	0	5.21859E-05	5.21859E-05	0	2.33324E-10	2.11349E-09	2.34681E-09	0.0023468
396366.283768677.2	396366.28	3768677	0	0	0	0	0	0	0	5.06731E-05	5.06731E-05	0	2.2656E-10	2.05222E-09	2.27878E-09	0.0022788
396466.283768677.2	396466.28	3768677	0	0	0	0	0	0	0	6.22106E-05	6.22106E-05	0	2.78144E-10	2.51948E-09	2.79762E-09	0.0027976
396566.283768677.2	396566.28	3768677	0	0	0	0	0	0	0	6.28893E-05	6.28893E-05	0	2.81179E-10	2.54697E-09	2.82814E-09	0.0028281
396666.283768677.2	396666.28	3768677	0	0	0	0	0	0	0	6.42071E-05	6.42071E-05	0	2.8707E-10	2.60033E-09	2.8874E-09	0.0028874
396766.283768677.2	396766.28	3768677	0	0	0	0	0	0	0	6.66299E-05	6.66299E-05	0	2.97903E-10	2.69846E-09	2.99636E-09	0.0029964
396866.283768677.2	396866.28	3768677	0	0	0	0	0	0	0	7.3998E-05	7.3998E-05	0	3.30846E-10	2.99686E-09	3.3277E-09	0.0033277
396966.283768677.2	396966.28	3768677	0	0	0	0	0	0	0	8.09988E-05	8.09988E-05	0	3.62146E-10	3.28038E-09	3.64253E-09	0.0036425
397066.283768677.2	397066.28	3768677	0	0	0	0	0	0	0	9.39578E-05	9.39578E-05	0	4.20086E-10	3.80521E-09	4.2253E-09	0.0042253

Garvey Reservoir Rehab - Mitigated Junction Structure			Demolition - 2025	Demolition - 2026	Site Preparation - 2025	ite Preparation - 202	Grading - 2025	Grading - 2026	Infrastructure - 2025	nfrastructure - 2026	Paving - 2025	rchitectural Coating - 202	Child Risk			
Unique Identifier	X (UTM)	Y (UTM)	1900	1900	1900	1900	1900	1900	2025	2026	1900	1900	3rd Trimester	0<2	Total	per million
397166.283768677.2	397166.28	3768677	0	0	0	0	0	0	0	0.000147469	0.000147469	0	6.59333E-10	5.97235E-09	6.63169E-09	0.0066317
397366.283768677.2	397366.28	3768677	0	0	0	0	0	0	0	0.000196102	0.000196102	0	8.76773E-10	7.94196E-09	8.81874E-09	0.0088187
397466.283768677.2	397466.28	3768677	0	0	0	0	0	0	0	7.90103E-05	7.90103E-05	0	3.53256E-10	3.19985E-09	3.55311E-09	0.0035531
397566.283768677.2	397566.28	3768677	0	0	0	0	0	0	0	4.30868E-05	4.30868E-05	0	1.92641E-10	1.74498E-09	1.93762E-09	0.0019376
397666.283768677.2	397666.28	3768677	0	0	0	0	0	0	0	2.82298E-05	2.82298E-05	0	1.26215E-10	1.14328E-09	1.2695E-09	0.0012695
397766.283768677.2	397766.28	3768677	0	0	0	0	0	0	0	2.08218E-05	2.08218E-05	0	9.30944E-11	8.43265E-10	9.3636E-10	0.0009364
397866.283768677.2	397866.28	3768677	0	0	0	0	0	0	0	1.52892E-05	1.52892E-05	0	6.83583E-11	6.19201E-10	6.87559E-10	0.0006876
396166.283768777.2	396166.28	3768777	0	0	0	0	0	0	0	0.000132727	0.000132727	0	5.93424E-10	5.37533E-09	5.96876E-09	0.0059688
396266.283768777.2	396266.28	3768777	0	0	0	0	0	0	0	0.000164923	0.000164923	0	7.37371E-10	6.67923E-09	7.4166E-09	0.0074166
396366.283768777.2	396366.28	3768777	0	0	0	0	0	0	0	0.000120907	0.000120907	0	5.40576E-10	4.89663E-09	5.4372E-09	0.0054372
396466.283768777.2	396466.28	3768777	0	0	0	0	0	0	0	0.000157991	0.000157991	0	7.06381E-10	6.39852E-09	7.1049E-09	0.0071049
396566.283768777.2	396566.28	3768777	0	0	0	0	0	0	0	0.000169188	0.000169188	0	7.5644E-10	6.85196E-09	7.6084E-09	0.0076084
396666.283768777.2	396666.28	3768777	0	0	0	0	0	0	0	0.000169128	0.000169128	0	7.56175E-10	6.84956E-09	7.60573E-09	0.0076057
396766.283768777.2	396766.28	3768777	0	0	0	0	0	0	0	0.000174954	0.000174954	0	7.82223E-10	7.08551E-09	7.86773E-09	0.0078677
396866.283768777.2	396866.28	3768777	0	0	0	0	0	0	0	0.000181896	0.000181896	0	8.13257E-10	7.36662E-09	8.17988E-09	0.0081799
396966.283768777.2	396966.28	3768777	0	0	0	0	0	0	0	0.000186382	0.000186382	0	8.33313E-10	7.54829E-09	8.38161E-09	0.0083816
397066.283768777.2	397066.28	3768777	0	0	0	0	0	0	0	0.000200791	0.000200791	0	8.9774E-10	8.13188E-09	9.02962E-09	0.0090296
397166.283768777.2	397166.28	3768777	0	0	0	0	0	0	0	0.000241802	0.000241802	0	1.0811E-09	9.79279E-09	1.08739E-08	0.0108739
397266.283768777.2	397266.28	3768777	0	0	0	0	0	0	0	0.000771231	0.000771231	0	3.44818E-09	3.12342E-08	3.46824E-08	0.0346824
397366.283768777.2	397366.28	3768777	0	0	0	0	0	0	0	0.000267969	0.000267969	0	1.19809E-09	1.08525E-08	1.20506E-08	0.0120506
397466.283768777.2	397466.28	3768777	0	0	0	0	0	0	0	9.42505E-05	9.42505E-05	0	4.21395E-10	3.81707E-09	4.23846E-09	0.0042385
397566.283768777.2	397566.28	3768777	0	0	0	0	0	0	0	5.0549E-05	5.0549E-05	0	2.26005E-10	2.04719E-09	2.2732E-09	0.0022732
397666.283768777.2	397666.28	3768777	0	0	0	0	0	0	0	3.17912E-05	3.17912E-05	0	1.42139E-10	1.28752E-09	1.42966E-09	0.0014297
397766.283768777.2	397766.28	3768777	0	0	0	0	0	0	0	2.17646E-05	2.17646E-05	0	9.73099E-11	8.8145E-10	9.78759E-10	0.0009788
397866.283768777.2	397866.28	3768777	0	0	0	0	0	0	0	1.58433E-05	1.58433E-05	0	7.08354E-11	6.41639E-10	7.12475E-10	0.0007125
396166.283768877.2	396166.28	3768877	0	0	0	0	0	0	0	0.000534373	0.000534373	0	2.38918E-09	2.16416E-08	2.40308E-08	0.0240308
396266.283768877.2	396266.28	3768877	0	0	0	0	0	0	0	0.000688214	0.000688214	0	3.07701E-09	2.78721E-08	3.09491E-08	0.0309491
396366.283768877.2	396366.28	3768877	0	0	0	0	0	0	0	0.000673899	0.000673899	0	3.01301E-09	2.72923E-08	3.03053E-08	0.0303053
396466.283768877.2	396466.28	3768877	0	0	0	0	0	0	0	0.000742351	0.000742351	0	3.31906E-09	3.00646E-08	3.33837E-08	0.0333837
396566.283768877.2	396566.28	3768877	0	0	0	0	0	0	0	0.00070014	0.00070014	0	3.13033E-09	2.83551E-08	3.14854E-08	0.0314854
396666.283768877.2	396666.28	3768877	0	0	0	0	0	0	0	0.000760661	0.000760661	0	3.40092E-09	3.08061E-08	3.42071E-08	0.0342071
396766.283768877.2	396766.28	3768877	0	0	0	0	0	0	0	0.000736205	0.000736205	0	3.29158E-09	2.98157E-08	3.31072E-08	0.0331072
396866.283768877.2	396866.28	3768877	0	0	0	0	0	0	0	0.000715148	0.000715148	0	3.19743E-09	2.89629E-08	3.21603E-08	0.0321603
396966.283768877.2	396966.28	3768877	0	0	0	0	0	0	0	0.000687674	0.000687674	0	3.0746E-09	2.78502E-08	3.09248E-08	0.0309248
397066.283768877.2	397066.28	3768877	0	0	0	0	0	0	0	0.000695221	0.000695221	0	3.10834E-09	2.81559E-08	3.12642E-08	0.0312642
397166.283768877.2	397166.28	3768877	0	0	0	0	0	0	0	0.000714546	0.000714546	0	3.19474E-09	2.89385E-08	3.21333E-08	0.0321333
397266.283768877.2	397266.28	3768877	0	0	0	0	0	0	0	0.000750688	0.000750688	0	3.35633E-09	3.04022E-08	3.37586E-08	0.0337586
397366.283768877.2	397366.28	3768877	0	0	0	0	0	0	0	0.000369107	0.000369107	0	1.65028E-09	1.49485E-08	1.65988E-08	0.0165988
397466.283768877.2	397466.28	3768877	0	0	0	0	0	0	0	9.87798E-05	9.87798E-05	0	4.41645E-10	4.0005E-09	4.44214E-09	0.0044421
397566.283768877.2	397566.28	3768877	0	0	0	0	0	0	0	5.05103E-05	5.05103E-05	0	2.25832E-10	2.04562E-09	2.27146E-09	0.0022715
397666.283768877.2	397666.28	3768877	0	0	0	0	0	0	0	3.1331E-05	3.1331E-05	0	1.40081E-10	1.26888E-09	1.40896E-09	0.001409
397766.283768877.2	397766.28	3768877	0	0	0	0	0	0	0	2.16575E-05	2.16575E-05	0	9.68307E-11	8.77109E-10	9.73939E-10	0.0009739
397866.283768877.2	397866.28	3768877	0	0	0	0	0	0	0	1.60291E-05	1.60291E-05	0	7.16661E-11	6.49164E-10	7.2083E-10	0.0007208
3964253767739	396425	3767739	0	0	0	0	0	0	0	7.20397E-06	7.20397E-06	0	3.2209E-11	2.91755E-10	3.23964E-10	0.000324
3964753767739	396475	3767739	0	0	0	0	0	0	0	7.37609E-06	7.37609E-06	0	3.29785E-11	2.98725E-10	3.31704E-10	0.0003317
3965253767739	396525	3767739	0	0	0	0	0	0	0	6.87507E-06	6.87507E-06	0	3.07385E-11	2.78435E-10	3.09173E-10	0.0003092
3965753767739	396575	3767739	0	0	0	0	0	0	0	7.07382E-06	7.07382E-06	0	3.16271E-11	2.86484E-10	3.18111E-10	0.0003181
3966253767739	396625	3767739	0	0	0	0	0	0	0	6.79381E-06	6.79381E-06	0	3.03752E-11	2.75143E-10	3.05519E-10	0.0003055
3966753767739	396675	3767739	0	0	0	0	0	0	0	6.95207E-06	6.95207E-06	0	3.10828E-11	2.81553E-10	3.12636E-10	0.0003126
3967253767739	396725	3767739	0	0	0	0	0	0	0	7.26558E-06	7.26558E-06	0	3.24845E-11	2.9425E-10	3.26734E-10	0.0003267
3967753767739	396775	3767739	0	0	0	0	0	0	0	7.32665E-06	7.32665E-06	0	3.27575E-11	2.96723E-10	3.29481E-10	0.0003295
3968253767739	396825	3767739	0	0	0	0	0	0	0	7.73952E-06	7.73952E-06	0	3.46035E-11	3.13444E-10	3.48048E-10	0.000348
3968753767739	396875	3767739	0	0	0	0	0	0	0	7.96493E-06	7.96493E-06	0	3.56113E-11	3.22573E-10	3.58184E-10	0.0003582
3969253767739	396925	3767739	0	0	0	0	0	0	0	7.94294E-06	7.94294E-06	0	3.55129E-11	3.21682E-10	3.57195E-10	0.0003572
3969753767739	396975	3767739	0	0	0	0	0	0	0	7.89019E-06	7.89019E-06	0	3.52771E-11	3.19546E-10	3.54823E-10	0.0003548
3970253767739	397025	3767739	0	0	0	0	0	0	0	7.85697E-06	7.85697E-06	0	3.51286E-11	3.18201E-10	3.53329E-10	0.0003533
3970753767739	397075	3767739	0	0	0	0	0	0	0	7.89709E-06	7.89709E-06	0	3.53079E-11	3.19825E-10	3.55133E-10	0.0003551
3971253767739	397125	3767739	0	0	0	0	0	0	0	7.90673E-06	7.90673E-06	0	3.5351E-11	3.20216E-10	3.55567E-10	0.0003556
3971753767739	397175	3767739	0	0	0	0	0	0	0	7.80276E-06	7.80276E-06	0	3.48862E-11	3.16005E-10	3.50891E-10	0.0003509
3972253767739	397225	3767739	0	0	0	0	0	0	0	7.63719E-06	7.63719E-06	0	3.41459E-11	3.093E-10	3.43446E-10	0.0003434
3972753767739	397275	3767739	0	0	0	0	0	0	0	7.20278E-06	7.20278E-06	0	3.22037E-11	2.91706E-10	3.2391E-10	0.0003239
3973253767739	397325	3767739	0	0	0	0	0	0	0	7.20566E-06	7.20566E-06	0	3.22166E-11	2.91823E-10	3.2404E-10	0.000324
3973753767739	397375	3767739	0	0	0	0	0	0	0	7.18178E-06	7.18178E-06	0	3.21098E-11	2.90856E-10	3.22966E-10	0.000323
3974253767739	397425	3767739	0	0	0	0	0	0	0	6.98887E-06	6.98887E-06	0	3.12473E-11	2.83043E-10	3.1429E-10	0.0003143
3974753767739	397475	3767739	0	0	0	0	0	0	0	6.17468E-06	6.17468E-06	0	2.7607E-11	2.50069E-10	2.77676E-10	0.0002777
3975253767739	397525	3767739	0	0	0	0	0	0	0	5.96908E-06	5.96908E-06	0	2.66878E-11	2.41743E-10	2.6843E-10	0.0002684
3964253767789	396425	3767789	0	0	0	0	0	0	0	7.6955E-06	7.6955E-06	0	3.44066E-11	3.11661E-10	3.46068E-10	0.0003461
3964753767789	396475	3767789	0	0	0	0	0	0	0	7.41389E-06	7.41389E-06	0	3.31476E-11	3.00256E-10	3.33404E-10	0.0003334
3965253767789	396525	3767789	0	0	0	0	0	0	0	7.02164E-06	7.02164E-06	0	3.13938E-11	2.84371E-10	3.15764E-10	0.0003158
3965753767789	396575	3767789	0	0	0	0	0	0	0	7.10663E-06	7.10663E-06	0	3.17738E-11	2.87812E-10	3.19586E-10	0.0003196
3966253767789	396625	3767789	0	0	0	0	0	0	0	7.29373E-06	7.29373E-06	0	3.26103E-11	2.9539E-10	3.28E-10	0.000328

Garvey Reservoir Rehab - Mitigated Junction Structure			Demolition - 2025	Demolition - 2026	Site Preparation - 2025	ite Preparation - 202	Grading - 2025	Grading - 2026	Infrastructure - 2025	nfrastructure - 2026	Paving - 2025	rchitectural Coating - 202	Child Risk			
Unique Identifier	X (UTM)	Y (UTM)	1900	1900	1900	1900	1900	1900	2025	2026	1900	1900	3rd Trimester	0<2	Total	per million
3966753767789	396675	3767789	0	0	0	0	0	0	0	7.51273E-06	7.51273E-06	0	3.35895E-11	3.04259E-10	3.37849E-10	0.0003378
3967253767789	396725	3767789	0	0	0	0	0	0	0	8.10376E-06	8.10376E-06	0	3.6232E-11	3.28196E-10	3.64428E-10	0.0003644
3967753767789	396775	3767789	0	0	0	0	0	0	0	8.30081E-06	8.30081E-06	0	3.7113E-11	3.36176E-10	3.73289E-10	0.0003733
3968253767789	396825	3767789	0	0	0	0	0	0	0	8.67271E-06	8.67271E-06	0	3.87758E-11	3.51238E-10	3.90013E-10	0.00039
3968753767789	396875	3767789	0	0	0	0	0	0	0	8.79661E-06	8.79661E-06	0	3.93297E-11	3.56255E-10	3.95585E-10	0.0003956
3969253767789	396925	3767789	0	0	0	0	0	0	0	8.79264E-06	8.79264E-06	0	3.9312E-11	3.56094E-10	3.95406E-10	0.0003954
3969753767789	396975	3767789	0	0	0	0	0	0	0	8.68443E-06	8.68443E-06	0	3.88281E-11	3.51712E-10	3.9054E-10	0.0003905
3970253767789	397025	3767789	0	0	0	0	0	0	0	8.63588E-06	8.63588E-06	0	3.86111E-11	3.49746E-10	3.88357E-10	0.0003884
3970753767789	397075	3767789	0	0	0	0	0	0	0	8.71677E-06	8.71677E-06	0	3.89727E-11	3.53022E-10	3.91994E-10	0.000392
3971253767789	397125	3767789	0	0	0	0	0	0	0	8.77979E-06	8.77979E-06	0	3.92545E-11	3.55574E-10	3.94829E-10	0.0003948
3971753767789	397175	3767789	0	0	0	0	0	0	0	8.74035E-06	8.74035E-06	0	3.90782E-11	3.53977E-10	3.93055E-10	0.0003931
3972253767789	397225	3767789	0	0	0	0	0	0	0	8.63093E-06	8.63093E-06	0	3.8589E-11	3.49545E-10	3.88134E-10	0.0003881
3972753767789	397275	3767789	0	0	0	0	0	0	0	8.15315E-06	8.15315E-06	0	3.64528E-11	3.30196E-10	3.66648E-10	0.0003666
3973253767789	397325	3767789	0	0	0	0	0	0	0	7.95506E-06	7.95506E-06	0	3.55671E-11	3.22173E-10	3.5774E-10	0.0003577
3973753767789	397375	3767789	0	0	0	0	0	0	0	7.98046E-06	7.98046E-06	0	3.56807E-11	3.23202E-10	3.58883E-10	0.0003589
3974253767789	397425	3767789	0	0	0	0	0	0	0	7.81708E-06	7.81708E-06	0	3.49502E-11	3.16585E-10	3.51535E-10	0.0003515
3974753767789	397475	3767789	0	0	0	0	0	0	0	6.81191E-06	6.81191E-06	0	3.04561E-11	2.75877E-10	3.06333E-10	0.0003063
3975253767789	397525	3767789	0	0	0	0	0	0	0	6.60683E-06	6.60683E-06	0	2.95392E-11	2.67571E-10	2.9711E-10	0.0002971
3964253767839	396425	3767839	0	0	0	0	0	0	0	8.21604E-06	8.21604E-06	0	3.6734E-11	3.32743E-10	3.69477E-10	0.0003695
3964753767839	396475	3767839	0	0	0	0	0	0	0	8.16376E-06	8.16376E-06	0	3.65003E-11	3.30626E-10	3.67126E-10	0.0003671
3965253767839	396525	3767839	0	0	0	0	0	0	0	7.40369E-06	7.40369E-06	0	3.3102E-11	2.99843E-10	3.32945E-10	0.0003329
3965753767839	396575	3767839	0	0	0	0	0	0	0	7.61628E-06	7.61628E-06	0	3.40525E-11	3.08453E-10	3.42505E-10	0.0003425
3966253767839	396625	3767839	0	0	0	0	0	0	0	7.84574E-06	7.84574E-06	0	3.50784E-11	3.17746E-10	3.52824E-10	0.0003528
3966753767839	396675	3767839	0	0	0	0	0	0	0	8.75109E-06	8.75109E-06	0	3.91262E-11	3.54412E-10	3.93538E-10	0.0003935
3967253767839	396725	3767839	0	0	0	0	0	0	0	9.16746E-06	9.16746E-06	0	4.09878E-11	3.71274E-10	4.12262E-10	0.0004123
3967753767839	396775	3767839	0	0	0	0	0	0	0	9.40771E-06	9.40771E-06	0	4.20619E-11	3.81004E-10	4.23066E-10	0.0004231
3968253767839	396825	3767839	0	0	0	0	0	0	0	9.64221E-06	9.64221E-06	0	4.31104E-11	3.90501E-10	4.33612E-10	0.0004336
3968753767839	396875	3767839	0	0	0	0	0	0	0	9.75542E-06	9.75542E-06	0	4.36166E-11	3.95086E-10	4.38703E-10	0.0004387
3969253767839	396925	3767839	0	0	0	0	0	0	0	9.78484E-06	9.78484E-06	0	4.37481E-11	3.96278E-10	4.40026E-10	0.00044
3969753767839	396975	3767839	0	0	0	0	0	0	0	9.68405E-06	9.68405E-06	0	4.32974E-11	3.92196E-10	4.35493E-10	0.0004355
3970253767839	397025	3767839	0	0	0	0	0	0	0	9.60676E-06	9.60676E-06	0	4.29519E-11	3.89066E-10	4.32017E-10	0.000432
3970753767839	397075	3767839	0	0	0	0	0	0	0	9.81404E-06	9.81404E-06	0	4.38787E-11	3.9746E-10	4.41339E-10	0.0004413
3971253767839	397125	3767839	0	0	0	0	0	0	0	9.99446E-06	9.99446E-06	0	4.46853E-11	4.04767E-10	4.49452E-10	0.0004495
3971753767839	397175	3767839	0	0	0	0	0	0	0	9.86235E-06	9.86235E-06	0	4.40946E-11	3.99417E-10	4.43511E-10	0.0004435
3972253767839	397225	3767839	0	0	0	0	0	0	0	9.48179E-06	9.48179E-06	0	4.23932E-11	3.84005E-10	4.26398E-10	0.0004264
3972753767839	397275	3767839	0	0	0	0	0	0	0	8.98205E-06	8.98205E-06	0	4.01588E-11	3.63765E-10	4.03924E-10	0.0004039
3973253767839	397325	3767839	0	0	0	0	0	0	0	8.56318E-06	8.56318E-06	0	3.8286E-11	3.46802E-10	3.85088E-10	0.0003851
3973753767839	397375	3767839	0	0	0	0	0	0	0	8.90805E-06	8.90805E-06	0	3.9828E-11	3.60769E-10	4.00597E-10	0.0004006
3974753767839	397475	3767839	0	0	0	0	0	0	0	8.39684E-06	8.39684E-06	0	3.75423E-11	3.40065E-10	3.77607E-10	0.0003776
3975253767839	397525	3767839	0	0	0	0	0	0	0	7.17645E-06	7.17645E-06	0	3.2086E-11	2.9064E-10	3.22726E-10	0.0003227
3964253767889	396425	3767889	0	0	0	0	0	0	0	8.68786E-06	8.68786E-06	0	3.88435E-11	3.51851E-10	3.90694E-10	0.0003907
3964753767889	396475	3767889	0	0	0	0	0	0	0	7.72394E-06	7.72394E-06	0	3.45338E-11	3.12813E-10	3.47347E-10	0.0003473
3965253767889	396525	3767889	0	0	0	0	0	0	0	7.92693E-06	7.92693E-06	0	3.54414E-11	3.21034E-10	3.56476E-10	0.0003565
3965753767889	396575	3767889	0	0	0	0	0	0	0	8.28594E-06	8.28594E-06	0	3.70465E-11	3.35573E-10	3.7262E-10	0.0003726
3974753767889	397475	3767889	0	0	0	0	0	0	0	9.11005E-06	9.11005E-06	0	4.07311E-11	3.68949E-10	4.09681E-10	0.0004097
3975253767889	397525	3767889	0	0	0	0	0	0	0	7.91657E-06	7.91657E-06	0	3.5395E-11	3.20614E-10	3.56009E-10	0.000356
3964253767939	396425	3767939	0	0	0	0	0	0	0	9.223E-06	9.223E-06	0	4.12361E-11	3.73524E-10	4.1476E-10	0.0004148
3964753767939	396475	3767939	0	0	0	0	0	0	0	8.29009E-06	8.29009E-06	0	3.70651E-11	3.35742E-10	3.72807E-10	0.0003728
3965253767939	396525	3767939	0	0	0	0	0	0	0	8.58704E-06	8.58704E-06	0	3.83927E-11	3.47768E-10	3.86161E-10	0.0003862
3974753767939	397475	3767939	0	0	0	0	0	0	0	9.67969E-06	9.67969E-06	0	4.3278E-11	3.92019E-10	4.35297E-10	0.0004353
3975253767939	397525	3767939	0	0	0	0	0	0	0	8.84858E-06	8.84858E-06	0	3.9562E-11	3.5836E-10	3.97922E-10	0.0003979
3964253767989	396425	3767989	0	0	0	0	0	0	0	9.04835E-06	9.04835E-06	0	4.04553E-11	3.66451E-10	4.06906E-10	0.0004069
3964753767989	396475	3767989	0	0	0	0	0	0	0	9.00918E-06	9.00918E-06	0	4.02801E-11	3.64864E-10	4.05144E-10	0.0004051
3974753767989	397475	3767989	0	0	0	0	0	0	0	1.11242E-05	1.11242E-05	0	4.97364E-11	4.50521E-10	5.00257E-10	0.0005003
3975253767989	397525	3767989	0	0	0	0	0	0	0	1.00822E-05	1.00822E-05	0	4.50776E-11	4.08321E-10	4.53398E-10	0.0004534
3964253768039	396425	3768039	0	0	0	0	0	0	0	9.75461E-06	9.75461E-06	0	4.36129E-11	3.95053E-10	4.38666E-10	0.0004387
3964753768039	396475	3768039	0	0	0	0	0	0	0	1.00792E-05	1.00792E-05	0	4.50642E-11	4.08199E-10	4.53264E-10	0.0004533
3974753768039	397475	3768039	0	0	0	0	0	0	0	1.48514E-05	1.48514E-05	0	6.64009E-11	6.01471E-10	6.67872E-10	0.0006679
3975253768039	397525	3768039	0	0	0	0	0	0	0	1.38974E-05	1.38974E-05	0	6.21354E-11	5.62833E-10	6.24968E-10	0.000625
3964253768089	396425	3768089	0	0	0	0	0	0	0	1.07571E-05	1.07571E-05	0	4.80949E-11	4.35652E-10	4.83747E-10	0.0004837
3964753768089	396475	3768089	0	0	0	0	0	0	0	1.13061E-05	1.13061E-05	0	5.05498E-11	4.57889E-10	5.08439E-10	0.0005084
3974753768089	397475	3768089	0	0	0	0	0	0	0	1.99899E-05	1.99899E-05	0	8.93751E-11	8.09575E-10	8.9895E-10	0.0008989
3975253768089	397525	3768089	0	0	0	0	0	0	0	1.841E-05	1.841E-05	0	8.23114E-11	7.45591E-10	8.27902E-10	0.0008279
3964253768139	396425	3768139	0	0	0	0	0	0	0	1.33947E-05	1.33947E-05	0	5.98878E-11	5.42474E-10	6.02362E-10	0.0006024
3964753768139	396475	3768139	0	0	0	0	0	0	0	1.23382E-05	1.23382E-05	0	5.51642E-11	4.99687E-10	5.54851E-10	0.0005549
3974253768139	397425	3768139	0	0	0	0	0	0	0	4.24084E-05	4.24084E-05	0	1.89608E-10	1.71751E-09	1.90711E-09	0.0019071
3974753768139	397475	3768139	0	0	0	0	0	0	0	3.07235E-05	3.07235E-05	0	1.37365E-10	1.24428E-09	1.38164E-09	0.0013816
3975253768139	397525	3768139	0	0	0	0	0	0	0	2.31816E-05	2.31816E-05	0	1.03645E-10	9.38834E-10	1.04248E-09	0.0010425
3964253768189	396425	3768189	0	0	0	0	0	0	0	1.44308E-05	1.44308E-05	0	6.45204E-11	5.84437E-10	6.48957E-10	0.000649
3964753768189	396475	3768189	0	0	0	0	0	0	0	1.35066E-05	1.35066E-05	0	6.0388E-11	5.47005E-10	6.07393E-10	0.0006074
3973753768189	397375	3768189	0	0	0	0	0	0	0	0.000251374	0.000251374	0	1.12389E-09	1.01804E-08	1.13043E-08	0.0113043

Garvey Reservoir Rehab - Mitigated Junction Structure			Demolition - 2025	Demolition - 2026	Site Preparation - 2025	ite Preparation - 202	Grading - 2025	Grading - 2026	Infrastructure - 2025	nfrastructure - 2026	Paving - 2025	rchitectural Coating - 202	Child Risk			
Unique Identifier	X (UTM)	Y (UTM)	1900	1900	1900	1900	1900	1900	2025	2026	1900	1900	3rd Trimester	0<2	Total	per million
3974253768189	397425	3768189	0	0	0	0	0	0	0	7.26092E-05	7.26092E-05	0	3.24636E-10	2.94061E-09	3.26525E-09	0.0032652
3974753768189	397475	3768189	0	0	0	0	0	0	0	4.16037E-05	4.16037E-05	0	1.86011E-10	1.68492E-09	1.87093E-09	0.0018709
3975253768189	397525	3768189	0	0	0	0	0	0	0	2.86451E-05	2.86451E-05	0	1.28073E-10	1.1601E-09	1.28818E-09	0.0012882
3964253768239	396425	3768239	0	0	0	0	0	0	0	1.56187E-05	1.56187E-05	0	6.98314E-11	6.32545E-10	7.02376E-10	0.0007024
3964753768239	396475	3768239	0	0	0	0	0	0	0	1.49348E-05	1.49348E-05	0	6.67738E-11	6.04848E-10	6.71622E-10	0.0006716
3973753768239	397375	3768239	0	0	0	0	0	0	0	0.000366194	0.000366194	0	1.63726E-09	1.48306E-08	1.64678E-08	0.0164678
3974253768239	397425	3768239	0	0	0	0	0	0	0	9.31217E-05	9.31217E-05	0	4.16348E-10	3.77135E-09	4.1877E-09	0.0041877
3974753768239	397475	3768239	0	0	0	0	0	0	0	5.02084E-05	5.02084E-05	0	2.24482E-10	2.0334E-09	2.25788E-09	0.0022579
3975253768239	397525	3768239	0	0	0	0	0	0	0	3.40586E-05	3.40586E-05	0	1.52276E-10	1.37934E-09	1.53162E-09	0.0015316
3964253768289	396425	3768289	0	0	0	0	0	0	0	1.67187E-05	1.67187E-05	0	7.47495E-11	6.77094E-10	7.51844E-10	0.0007518
3964753768289	396475	3768289	0	0	0	0	0	0	0	1.66394E-05	1.66394E-05	0	7.4395E-11	6.73883E-10	7.48278E-10	0.0007483
3973253768289	397325	3768289	0	0	0	0	0	0	0	0.000970128	0.000970128	0	4.33745E-09	3.92893E-08	4.36268E-08	0.0436268
3973753768289	397375	3768289	0	0	0	0	0	0	0	0.000256808	0.000256808	0	1.14819E-09	1.04005E-08	1.15487E-08	0.0115487
3974253768289	397425	3768289	0	0	0	0	0	0	0	0.000113184	0.000113184	0	5.06046E-10	4.58385E-09	5.08989E-09	0.0050899
3974753768289	397475	3768289	0	0	0	0	0	0	0	6.23968E-05	6.23968E-05	0	2.78976E-10	2.52702E-09	2.80599E-09	0.002806
3975253768289	397525	3768289	0	0	0	0	0	0	0	4.04861E-05	4.04861E-05	0	1.81014E-10	1.63965E-09	1.82067E-09	0.0018207
3964253768339	396425	3768339	0	0	0	0	0	0	0	1.89441E-05	1.89441E-05	0	8.46993E-11	7.67221E-10	8.5192E-10	0.0008519
3964753768339	396475	3768339	0	0	0	0	0	0	0	1.88028E-05	1.88028E-05	0	8.40674E-11	7.61497E-10	8.45564E-10	0.0008456
3965253768339	396525	3768339	0	0	0	0	0	0	0	2.00438E-05	2.00438E-05	0	8.96161E-11	8.11758E-10	9.01374E-10	0.0009014
3972753768339	397275	3768339	0	0	0	0	0	0	0	0.000788164	0.000788164	0	3.52389E-09	3.192E-08	3.54439E-08	0.0354439
3973253768339	397325	3768339	0	0	0	0	0	0	0	0.000581036	0.000581036	0	2.59782E-09	2.35315E-08	2.61293E-08	0.0261293
3973753768339	397375	3768339	0	0	0	0	0	0	0	0.00021402	0.00021402	0	9.56887E-10	8.66765E-09	9.62453E-09	0.0096245
3974253768339	397425	3768339	0	0	0	0	0	0	0	0.000112533	0.000112533	0	5.03137E-10	4.5575E-09	5.06064E-09	0.0050606
3974753768339	397475	3768339	0	0	0	0	0	0	0	6.76729E-05	6.76729E-05	0	3.02566E-10	2.74069E-09	3.04326E-09	0.0030433
3975253768339	397525	3768339	0	0	0	0	0	0	0	4.496E-05	4.496E-05	0	2.01017E-10	1.82084E-09	2.02186E-09	0.0020219
3964253768389	396425	3768389	0	0	0	0	0	0	0	2.10518E-05	2.10518E-05	0	9.41227E-11	8.52579E-10	9.46702E-10	0.0009467
3964753768389	396475	3768389	0	0	0	0	0	0	0	2.14284E-05	2.14284E-05	0	9.58067E-11	8.67834E-10	9.6364E-10	0.0009636
3965253768389	396525	3768389	0	0	0	0	0	0	0	2.24599E-05	2.24599E-05	0	1.00418E-10	9.09605E-10	1.01002E-09	0.00101
3972253768389	397225	3768389	0	0	0	0	0	0	0	0.000189473	0.000189473	0	8.47135E-10	7.6735E-09	8.52063E-09	0.0085206
3972753768389	397275	3768389	0	0	0	0	0	0	0	0.000750467	0.000750467	0	3.35534E-09	3.03933E-08	3.37486E-08	0.0337486
3973253768389	397325	3768389	0	0	0	0	0	0	0	0.00058123	0.00058123	0	2.59868E-09	2.35393E-08	2.6138E-08	0.026138
3973753768389	397375	3768389	0	0	0	0	0	0	0	0.000206027	0.000206027	0	9.21148E-10	8.34392E-09	9.26507E-09	0.0092651
3974253768389	397425	3768389	0	0	0	0	0	0	0	0.000112723	0.000112723	0	5.03988E-10	4.56521E-09	5.06919E-09	0.0050692
3974753768389	397475	3768389	0	0	0	0	0	0	0	7.12803E-05	7.12803E-05	0	3.18695E-10	2.88679E-09	3.20548E-09	0.0032055
3975253768389	397525	3768389	0	0	0	0	0	0	0	4.89604E-05	4.89604E-05	0	2.18902E-10	1.98285E-09	2.20176E-09	0.0022018
3964253768439	396425	3768439	0	0	0	0	0	0	0	2.38928E-05	2.38928E-05	0	1.06825E-10	9.67638E-10	1.07446E-09	0.0010745
3964753768439	396475	3768439	0	0	0	0	0	0	0	2.46051E-05	2.46051E-05	0	1.10009E-10	9.96485E-10	1.10649E-09	0.0011065
3965253768439	396525	3768439	0	0	0	0	0	0	0	2.54921E-05	2.54921E-05	0	1.13975E-10	1.03241E-09	1.14638E-09	0.0011464
3971753768439	397175	3768439	0	0	0	0	0	0	0	0.000102075	0.000102075	0	4.5638E-10	4.13397E-09	4.59035E-09	0.0045903
3972253768439	397225	3768439	0	0	0	0	0	0	0	0.000198768	0.000198768	0	8.88695E-10	8.04995E-09	8.93864E-09	0.0089386
3972753768439	397275	3768439	0	0	0	0	0	0	0	0.000754179	0.000754179	0	3.37194E-09	3.05436E-08	3.39155E-08	0.0339155
3973253768439	397325	3768439	0	0	0	0	0	0	0	0.000567481	0.000567481	0	2.53721E-09	2.29825E-08	2.55197E-08	0.0255197
3973753768439	397375	3768439	0	0	0	0	0	0	0	0.000190445	0.000190445	0	8.51479E-10	7.71285E-09	8.56433E-09	0.0085643
3974253768439	397425	3768439	0	0	0	0	0	0	0	0.000104214	0.000104214	0	4.65941E-10	4.22057E-09	4.68651E-09	0.0046865
3974753768439	397475	3768439	0	0	0	0	0	0	0	7.37959E-05	7.37959E-05	0	3.29942E-10	2.98867E-09	3.31861E-09	0.0033186
3975253768439	397525	3768439	0	0	0	0	0	0	0	5.18253E-05	5.18253E-05	0	2.31712E-10	2.09888E-09	2.33059E-09	0.0023306
3964253768489	396425	3768489	0	0	0	0	0	0	0	2.72532E-05	2.72532E-05	0	1.21849E-10	1.10373E-09	1.22558E-09	0.0012256
3964753768489	396475	3768489	0	0	0	0	0	0	0	2.8417E-05	2.8417E-05	0	1.27053E-10	1.15087E-09	1.27792E-09	0.0012779
3965253768489	396525	3768489	0	0	0	0	0	0	0	2.95221E-05	2.95221E-05	0	1.31994E-10	1.19562E-09	1.32761E-09	0.0013276
3970753768489	397075	3768489	0	0	0	0	0	0	0	5.81399E-05	5.81399E-05	0	2.59944E-10	2.35462E-09	2.61456E-09	0.0026146
3971253768489	397125	3768489	0	0	0	0	0	0	0	7.3862E-05	7.3862E-05	0	3.30238E-10	2.99135E-09	3.32159E-09	0.0033216
3971753768489	397175	3768489	0	0	0	0	0	0	0	0.000106825	0.000106825	0	4.77613E-10	4.3263E-09	4.80392E-09	0.0048039
3972253768489	397225	3768489	0	0	0	0	0	0	0	0.000197614	0.000197614	0	8.83533E-10	8.00319E-09	8.88672E-09	0.0088867
3972753768489	397275	3768489	0	0	0	0	0	0	0	0.000740434	0.000740434	0	3.31049E-09	2.9987E-08	3.32975E-08	0.0332975
3973253768489	397325	3768489	0	0	0	0	0	0	0	0.000489762	0.000489762	0	2.18973E-09	1.9835E-08	2.20247E-08	0.0220247
3973753768489	397375	3768489	0	0	0	0	0	0	0	0.000187596	0.000187596	0	8.38742E-10	7.59747E-09	8.43621E-09	0.0084362
3974253768489	397425	3768489	0	0	0	0	0	0	0	0.000103543	0.000103543	0	4.62944E-10	4.19342E-09	4.65637E-09	0.0046564
3974753768489	397475	3768489	0	0	0	0	0	0	0	6.45349E-05	6.45349E-05	0	2.88536E-10	2.61361E-09	2.90214E-09	0.0029021
3975253768489	397525	3768489	0	0	0	0	0	0	0	4.67519E-05	4.67519E-05	0	2.09028E-10	1.89341E-09	2.10244E-09	0.0021024
3964253768539	396425	3768539	0	0	0	0	0	0	0	3.16938E-05	3.16938E-05	0	1.41703E-10	1.28357E-09	1.42528E-09	0.0014253
3964753768539	396475	3768539	0	0	0	0	0	0	0	3.34216E-05	3.34216E-05	0	1.49428E-10	1.35355E-09	1.50298E-09	0.001503
3965253768539	396525	3768539	0	0	0	0	0	0	0	3.45357E-05	3.45357E-05	0	1.54409E-10	1.39866E-09	1.55307E-09	0.0015531
3965753768539	396575	3768539	0	0	0	0	0	0	0	3.32369E-05	3.32369E-05	0	1.48602E-10	1.34607E-09	1.49467E-09	0.0014947
3970253768539	397025	3768539	0	0	0	0	0	0	0	5.49967E-05	5.49967E-05	0	2.45891E-10	2.22732E-09	2.47321E-09	0.0024732
3970753768539	397075	3768539	0	0	0	0	0	0	0	6.43527E-05	6.43527E-05	0	2.87721E-10	2.60623E-09	2.89395E-09	0.0028939
3971253768539	397125	3768539	0	0	0	0	0	0	0	8.08591E-05	8.08591E-05	0	3.61521E-10	3.27472E-09	3.63625E-09	0.0036362
3971753768539	397175	3768539	0	0	0	0	0	0	0	0.000115452	0.000115452	0	5.16187E-10	4.67571E-09	5.19189E-09	0.0051919
3972253768539	397225	3768539	0	0	0	0	0	0	0	0.000202489	0.000202489	0	9.0533E-10	8.20064E-09	9.10597E-09	0.009106
3972753768539	397275	3768539	0	0	0	0	0	0	0	0.000674464	0.000674464	0	3.01553E-09	2.73152E-08	3.03308E-08	0.0303308
3973253768539	397325	3768539	0	0	0	0	0	0	0	0.000472319	0.000472319	0	2.11174E-09	1.91285E-08	2.12403E-08	0.0212403
3973753768539	397375	3768539	0	0	0	0	0	0	0	0.000188947	0.000188947	0	8.44784E-10	7.6522E-09	8.49698E-09	0.008497

Garvey Reservoir Rehab - Mitigated Junction Structure			Demolition - 2025	Demolition - 2026	Site Preparation - 2025	ite Preparation - 202	Grading - 2025	Grading - 2026	Infrastructure - 2025	nfrastructure - 2026	Paving - 2025	rchitectural Coating - 202	Child Risk			
Unique Identifier	X (UTM)	Y (UTM)	1900	1900	1900	1900	1900	1900	2025	2026	1900	1900	3rd Trimester	0<2	Total	per million
3974253768539	397425	3768539	0	0	0	0	0	0	0	0.000101197	0.000101197	0	4.52453E-10	4.0984E-09	4.55085E-09	0.0045509
3974753768539	397475	3768539	0	0	0	0	0	0	0	6.5278E-05	6.5278E-05	0	2.91859E-10	2.64371E-09	2.93556E-09	0.0029356
3975253768539	397525	3768539	0	0	0	0	0	0	0	4.64848E-05	4.64848E-05	0	2.07834E-10	1.8826E-09	2.09043E-09	0.0020904
3964253768589	396425	3768589	0	0	0	0	0	0	0	3.69868E-05	3.69868E-05	0	1.65368E-10	1.49793E-09	1.6633E-09	0.0016633
3964753768589	396475	3768589	0	0	0	0	0	0	0	4.01359E-05	4.01359E-05	0	1.79448E-10	1.62547E-09	1.80492E-09	0.0018049
3965253768589	396525	3768589	0	0	0	0	0	0	0	3.99925E-05	3.99925E-05	0	1.78807E-10	1.61966E-09	1.79847E-09	0.0017985
3965753768589	396575	3768589	0	0	0	0	0	0	0	3.85848E-05	3.85848E-05	0	1.72513E-10	1.56265E-09	1.73517E-09	0.0017352
3966253768589	396625	3768589	0	0	0	0	0	0	0	3.8145E-05	3.8145E-05	0	1.70547E-10	1.54484E-09	1.71539E-09	0.0017154
3968253768589	396825	3768589	0	0	0	0	0	0	0	4.69972E-05	4.69972E-05	0	2.10125E-10	1.90335E-09	2.11347E-09	0.0021135
3968753768589	396875	3768589	0	0	0	0	0	0	0	4.98163E-05	4.98163E-05	0	2.22729E-10	2.01752E-09	2.24025E-09	0.0022402
3969253768589	396925	3768589	0	0	0	0	0	0	0	5.41098E-05	5.41098E-05	0	2.41925E-10	2.1914E-09	2.43333E-09	0.0024333
3969753768589	396975	3768589	0	0	0	0	0	0	0	5.80856E-05	5.80856E-05	0	2.59701E-10	2.35242E-09	2.61212E-09	0.0026121
3970253768589	397025	3768589	0	0	0	0	0	0	0	6.38991E-05	6.38991E-05	0	2.85693E-10	2.58786E-09	2.87355E-09	0.0028736
3970753768589	397075	3768589	0	0	0	0	0	0	0	7.2588E-05	7.2588E-05	0	3.24542E-10	2.93975E-09	3.26429E-09	0.0032643
3971253768589	397125	3768589	0	0	0	0	0	0	0	9.11865E-05	9.11865E-05	0	4.07695E-10	3.69297E-09	4.10067E-09	0.0041007
3971753768589	397175	3768589	0	0	0	0	0	0	0	0.000129253	0.000129253	0	5.7789E-10	5.23463E-09	5.81252E-09	0.0058125
3972253768589	397225	3768589	0	0	0	0	0	0	0	0.000226062	0.000226062	0	1.01072E-09	9.15531E-09	1.0166E-08	0.010166
3972753768589	397275	3768589	0	0	0	0	0	0	0	0.000720408	0.000720408	0	3.22095E-09	2.91759E-08	3.23969E-08	0.0323969
3973253768589	397325	3768589	0	0	0	0	0	0	0	0.000469065	0.000469065	0	2.0972E-09	1.89968E-08	2.10939E-08	0.0210939
3973753768589	397375	3768589	0	0	0	0	0	0	0	0.000188904	0.000188904	0	8.44589E-10	7.65043E-09	8.49502E-09	0.008495
3974253768589	397425	3768589	0	0	0	0	0	0	0	9.82419E-05	9.82419E-05	0	4.3924E-10	3.97872E-09	4.41796E-09	0.004418
3974753768589	397475	3768589	0	0	0	0	0	0	0	6.48067E-05	6.48067E-05	0	2.89751E-10	2.62462E-09	2.91437E-09	0.0029144
3975253768589	397525	3768589	0	0	0	0	0	0	0	4.6876E-05	4.6876E-05	0	2.09583E-10	1.89844E-09	2.10802E-09	0.002108
3964253768639	396425	3768639	0	0	0	0	0	0	0	4.45817E-05	4.45817E-05	0	1.99325E-10	1.80552E-09	2.00485E-09	0.0020048
3964753768639	396475	3768639	0	0	0	0	0	0	0	5.04824E-05	5.04824E-05	0	2.25707E-10	2.0445E-09	2.2702E-09	0.0022702
3965253768639	396525	3768639	0	0	0	0	0	0	0	4.74389E-05	4.74389E-05	0	2.121E-10	1.92124E-09	2.13334E-09	0.0021333
3965753768639	396575	3768639	0	0	0	0	0	0	0	4.7726E-05	4.7726E-05	0	2.13384E-10	1.93286E-09	2.14625E-09	0.0021462
3966253768639	396625	3768639	0	0	0	0	0	0	0	4.8578E-05	4.8578E-05	0	2.17193E-10	1.96737E-09	2.18456E-09	0.0021846
3966753768639	396675	3768639	0	0	0	0	0	0	0	4.95918E-05	4.95918E-05	0	2.21725E-10	2.00842E-09	2.23015E-09	0.0022301
3967253768639	396725	3768639	0	0	0	0	0	0	0	5.11221E-05	5.11221E-05	0	2.28567E-10	2.0704E-09	2.29897E-09	0.002299
3967753768639	396775	3768639	0	0	0	0	0	0	0	5.38951E-05	5.38951E-05	0	2.40965E-10	2.1827E-09	2.42367E-09	0.0024237
3968253768639	396825	3768639	0	0	0	0	0	0	0	5.6558E-05	5.6558E-05	0	2.52871E-10	2.29055E-09	2.54342E-09	0.0025434
3968753768639	396875	3768639	0	0	0	0	0	0	0	6.06448E-05	6.06448E-05	0	2.71143E-10	2.45606E-09	2.72721E-09	0.0027272
3969253768639	396925	3768639	0	0	0	0	0	0	0	6.52452E-05	6.52452E-05	0	2.91712E-10	2.64237E-09	2.93409E-09	0.0029341
3969753768639	396975	3768639	0	0	0	0	0	0	0	6.93001E-05	6.93001E-05	0	3.09841E-10	2.8066E-09	3.11644E-09	0.0031164
3970253768639	397025	3768639	0	0	0	0	0	0	0	7.47681E-05	7.47681E-05	0	3.34289E-10	3.02805E-09	3.36233E-09	0.0033623
3970753768639	397075	3768639	0	0	0	0	0	0	0	8.29754E-05	8.29754E-05	0	3.70984E-10	3.36043E-09	3.73142E-09	0.0037314
3971253768639	397125	3768639	0	0	0	0	0	0	0	9.97722E-05	9.97722E-05	0	4.46082E-10	4.04069E-09	4.48677E-09	0.0044868
3971753768639	397175	3768639	0	0	0	0	0	0	0	0.000145964	0.000145964	0	6.52604E-10	5.9114E-09	6.564E-09	0.006564
3972253768639	397225	3768639	0	0	0	0	0	0	0	0.000287662	0.000287662	0	1.28614E-09	1.16501E-08	1.29362E-08	0.0129362
3972753768639	397275	3768639	0	0	0	0	0	0	0	0.001002035	0.001002035	0	4.48011E-09	4.05816E-08	4.50617E-08	0.0450617
3973253768639	397325	3768639	0	0	0	0	0	0	0	0.000422525	0.000422525	0	1.88911E-09	1.71119E-08	1.9001E-08	0.019001
3973753768639	397375	3768639	0	0	0	0	0	0	0	0.000186159	0.000186159	0	8.32318E-10	7.53928E-09	8.3716E-09	0.0083716
3974253768639	397425	3768639	0	0	0	0	0	0	0	0.000108512	0.000108512	0	4.85158E-10	4.39465E-09	4.87981E-09	0.0048798
3974753768639	397475	3768639	0	0	0	0	0	0	0	6.44145E-05	6.44145E-05	0	2.87998E-10	2.60873E-09	2.89673E-09	0.0028967
3975253768639	397525	3768639	0	0	0	0	0	0	0	4.7333E-05	4.7333E-05	0	2.11626E-10	1.91695E-09	2.12857E-09	0.0021286
3964253768689	396425	3768689	0	0	0	0	0	0	0	5.74646E-05	5.74646E-05	0	2.56925E-10	2.32727E-09	2.58419E-09	0.0025842
3964753768689	396475	3768689	0	0	0	0	0	0	0	6.81666E-05	6.81666E-05	0	3.04774E-10	2.76069E-09	3.06546E-09	0.0030655
3965253768689	396525	3768689	0	0	0	0	0	0	0	7.07517E-05	7.07517E-05	0	3.16331E-10	2.86538E-09	3.18172E-09	0.0031817
3965753768689	396575	3768689	0	0	0	0	0	0	0	6.95382E-05	6.95382E-05	0	3.10906E-10	2.81624E-09	3.12714E-09	0.0031271
3966253768689	396625	3768689	0	0	0	0	0	0	0	7.03557E-05	7.03557E-05	0	3.14561E-10	2.84935E-09	3.16391E-09	0.0031639
3966753768689	396675	3768689	0	0	0	0	0	0	0	6.98859E-05	6.98859E-05	0	3.1246E-10	2.83032E-09	3.14278E-09	0.0031428
3967253768689	396725	3768689	0	0	0	0	0	0	0	7.10507E-05	7.10507E-05	0	3.17668E-10	2.87749E-09	3.19516E-09	0.0031952
3967753768689	396775	3768689	0	0	0	0	0	0	0	7.20714E-05	7.20714E-05	0	3.22232E-10	2.91883E-09	3.24106E-09	0.0032411
3968253768689	396825	3768689	0	0	0	0	0	0	0	7.59723E-05	7.59723E-05	0	3.39673E-10	3.07681E-09	3.41649E-09	0.0034165
3968753768689	396875	3768689	0	0	0	0	0	0	0	8.00195E-05	8.00195E-05	0	3.57768E-10	3.24072E-09	3.59849E-09	0.0035985
3969253768689	396925	3768689	0	0	0	0	0	0	0	8.34748E-05	8.34748E-05	0	3.73216E-10	3.38066E-09	3.75387E-09	0.0037539
3969753768689	396975	3768689	0	0	0	0	0	0	0	8.70377E-05	8.70377E-05	0	3.89146E-10	3.52495E-09	3.9141E-09	0.0039141
3970253768689	397025	3768689	0	0	0	0	0	0	0	9.20079E-05	9.20079E-05	0	4.11368E-10	3.72624E-09	4.13761E-09	0.0041376
3970753768689	397075	3768689	0	0	0	0	0	0	0	0.000100925	0.000100925	0	4.51235E-10	4.08736E-09	4.5386E-09	0.0045386
3971253768689	397125	3768689	0	0	0	0	0	0	0	0.000117858	0.000117858	0	5.26944E-10	4.77315E-09	5.30009E-09	0.0053001
3971753768689	397175	3768689	0	0	0	0	0	0	0	0.000164349	0.000164349	0	7.34805E-10	6.65599E-09	7.3908E-09	0.0073908
3972253768689	397225	3768689	0	0	0	0	0	0	0	0.000372703	0.000372703	0	1.66636E-09	1.50941E-08	1.67605E-08	0.0167605
3972753768689	397275	3768689	0	0	0	0	0	0	0	0.001023715	0.001023715	0	4.57704E-09	4.14596E-08	4.60366E-08	0.0460366
3973253768689	397325	3768689	0	0	0	0	0	0	0	0.000342623	0.000342623	0	1.53187E-09	1.3876E-08	1.54078E-08	0.0154078
3973753768689	397375	3768689	0	0	0	0	0	0	0	0.000173454	0.000173454	0	7.75512E-10	7.02472E-09	7.80023E-09	0.0078002
3974253768689	397425	3768689	0	0	0	0	0	0	0	0.000108349	0.000108349	0	4.84428E-10	4.38803E-09	4.87246E-09	0.0048725
3974753768689	397475	3768689	0	0	0	0	0	0	0	7.39421E-05	7.39421E-05	0	3.30596E-10	2.99459E-09	3.32519E-09	0.0033252
3975253768689	397525	3768689	0	0	0	0	0	0	0	5.3666E-05	5.3666E-05	0	2.39941E-10	2.17343E-09	2.41337E-09	0.0024134

Garvey Reservoir Rehab - Mitigated Junction Structure

Maximum Individual Non-Cancer Impact Calculations - Sensitive Receptors (Maximum Impacted Senior Residential Receptor) (IMPACT AT ALL OTHER LOCATIONS ON THE PROJECT SITE WOULD BE LESS THAN SHOWN)

Maximum Non-cancer Chronic Hazards / Toxicological Endpoints*

Receptor Group	Pollutant	CREL[1]	CONC	WFrac	$CONC_{WF}$	HI		ALIM	BN	CVS	DEV	ENDC	EYE	HEM	IMMUN	KIDN	NS	REPRO	RESP	SK
Project:																				
MEI - Max	DPM	5.00E+00	5.10E-02	1.00E+00	5.10E-02	0.010		-	-	-	-	-	-	-	-	-	-	-	1.02E-02	-
							Total Risk				-			-				-	0.010	
							Threshold				1.00			1.00				1.00	1.00	
							Over?				NO			NO				NO	NO	

Notes:

1. California Air Resources Board, "Consolidated Table of OEHHA/ARB Approved Risk Assessment Health Values," "OEHHA/ARB Approved Chronic Reference Exposure Levels and Target Organs," "OEHHA/ARB Approved Acute Reference Exposure Levels and Target Organs," and "OEHHA/ARB Approved 8-Hour Reference Exposure Levels and Target Organs," http://www.arb.ca.gov/toxics/healthval/healthval.htm. Tables last updated: May 8, 2018. Downloaded: 08/14/18.

Source: ESA, 2020

Where:

$CONC_{WF}$	Pollutant Concentration ($\mu g/m^3$) multiplied by the weight fraction
CREL	Chronic Reference Exposure Level
HI	Hazard Index
MEI	Maximally Exposed Individual
WFrac	Weight fraction of speciated component

* Key to Toxicological Endpoints

ALIM	Alimentary Tract	EYE	Eye	NS	Nervous System
BN	Bone	HEM	Hematologic System	REPRO	Reproductive System
CVS	Cardiovascular System	IMMUN	Immune System	RESP	Respiratory System
DEV	Developmental System	KIDN	Kidney	SK	Skin
ENDC	Endocrine System				

Facility Electrical System

Garvey Reservoir Rehab - Unmitigated Facility Electrical System

Cancer Risk Summary & Maximum Annual GLC for Chronic Calculations

Cancer Risk Summary

Max Risk: 20.28296

XY	X	Y	Offroad Risk	Haul Risk	Total Risk
7449041451	574490	4145130	0.036422838	3.93056E-06	0.036427
7448041451	574480	4145140	0.040313016	4.01967E-06	0.040317
7449041451	574490	4145140	0.046106503	4.18315E-06	0.046111
7449041451	574490	4145150	0.052187808	4.29214E-06	0.052192
7450041451	574500	4145150	0.059680347	4.70536E-06	0.059685
7446041451	574460	4145160	0.066355855	4.44866E-06	0.06636
7449041451	574490	4145160	0.072214334	4.43122E-06	0.072219
7450041451	574500	4145160	0.078499896	4.4351E-06	0.078504
7451041451	574510	4145160	0.086168839	4.49378E-06	0.086173
7446041451	574460	4145170	0.091145296	4.38046E-06	0.09115
7447041451	574470	4145170	0.092602953	4.32054E-06	0.092607
7448041451	574480	4145170	0.091238141	4.32575E-06	0.091242
7449041451	574490	4145170	0.091210287	4.12856E-06	0.091214
7450041451	574500	4145170	0.089269841	3.71677E-06	0.089274
7451041451	574510	4145170	0.084562632	3.65594E-06	0.084566
7452041451	574520	4145170	0.078564887	3.54862E-06	0.078568
7446041451	574460	4145180	0.070348162	3.66231E-06	0.070352
7447041451	574470	4145180	0.063199148	3.48837E-06	0.063203
7448041451	574480	4145180	0.038446844	4.52319E-06	0.038451
7449041451	574490	4145180	0.042420583	4.41963E-06	0.042425
7450041451	574500	4145180	0.049328202	4.65621E-06	0.049333
7451041451	574510	4145180	0.056987861	5.09972E-06	0.056993
7452041451	574520	4145180	0.065761652	5.16901E-06	0.065767
7453041451	574530	4145180	0.075083224	5.01892E-06	0.075088
7445041451	574450	4145190	0.085017569	5.05818E-06	0.085023
7446041451	574460	4145190	0.095657532	5.08772E-06	0.095663
7447041451	574470	4145190	0.108284363	5.16345E-06	0.10829
7448041451	574480	4145190	0.118014451	5.06423E-06	0.11802
7449041451	574490	4145190	0.122498833	4.90473E-06	0.122504
7450041451	574500	4145190	0.122043895	4.92094E-06	0.122049
7451041451	574510	4145190	0.120251999	4.7729E-06	0.120257
7452041451	574520	4145190	0.117104576	4.30496E-06	0.117109
7444041452	574440	4145200	0.109342789	4.08264E-06	0.109347
7445041452	574450	4145200	0.099092773	3.9931E-06	0.099097
7446041452	574460	4145200	0.08788646	3.89826E-06	0.08789
7447041452	574470	4145200	0.076986533	3.75169E-06	0.07699
7448041452	574480	4145200	0.039709528	4.76802E-06	0.039714
7449041452	574490	4145200	0.044658131	4.90147E-06	0.044663
7450041452	574500	4145200	0.051723586	5.12629E-06	0.051729
7451041452	574510	4145200	0.06085947	5.44334E-06	0.060865
7443041452	574430	4145210	0.072232903	6.04662E-06	0.072239
7444041452	574440	4145210	0.08591816	6.1397E-06	0.085924
7445041452	574450	4145210	0.098489284	5.78957E-06	0.098495
7446041452	574460	4145210	0.117810193	5.93555E-06	0.117816
7447041452	574470	4145210	0.137808866	6.01672E-06	0.137815
7448041452	574480	4145210	0.15630346	6.01817E-06	0.156309
7449041452	574490	4145210	0.169236677	5.79612E-06	0.169242
7450041452	574500	4145210	0.172179843	5.71927E-06	0.172186
7451041452	574510	4145210	0.168493923	5.57673E-06	0.168499
7443041452	574430	4145220	0.16220836	4.96771E-06	0.162213
7444041452	574440	4145220	0.147381118	4.68575E-06	0.147386
7445041452	574450	4145220	0.129239332	4.4309E-06	0.129244
7446041452	574460	4145220	0.110549765	4.26246E-06	0.110554
7447041452	574470	4145220	0.093540681	4.05199E-06	0.093545
7448041452	574480	4145220	0.041213606	5.77302E-06	0.041219
7449041452	574490	4145220	0.046747129	5.46212E-06	0.046753
7450041452	574500	4145220	0.05470389	5.82039E-06	0.05471
7451041452	574510	4145220	0.065241723	6.88444E-06	0.065249
7452041452	574520	4145220	0.078212079	6.94689E-06	0.078219
7453041452	574530	4145220	0.092732935	6.50752E-06	0.092739
7444041452	574440	4145230	0.115117707	6.77452E-06	0.115124
7445041452	574450	4145230	0.146304123	7.1552E-06	0.146311

Max GLC for Chronic Calcs

Max GLC: 0.390862

XY	X	Y	2025	2026	2027	2034	2035
57449041451	574490	4145130	7.414E-05	0.0007019	0		
57448041451	574480	4145140	8.206E-05	0.0007769	0		
57449041451	574490	4145140	9.386E-05	0.0008885	0		
57449041451	574490	4145150	0.0001062	0.0010057	0		
57450041451	574500	4145150	0.0001215	0.0011501	0		
57446041451	574460	4145160	0.0001351	0.0012788	0		
57449041451	574490	4145160	0.000147	0.0013917	0		
57450041451	574500	4145160	0.0001598	0.0015128	0		
57451041451	574510	4145160	0.0001754	0.0016606	0		
57446041451	574460	4145170	0.0001855	0.0017565	0		
57447041451	574470	4145170	0.0001885	0.0017846	0		
57448041451	574480	4145170	0.0001857	0.0017583	0		
57449041451	574490	4145170	0.0001857	0.0017577	0		
57450041451	574500	4145170	0.0001817	0.0017203	0		
57451041451	574510	4145170	0.0001721	0.0016296	0		
57452041451	574520	4145170	0.0001599	0.001514	0		
57446041451	574460	4145180	0.0001432	0.0013557	0		
57447041451	574470	4145180	0.0001286	0.0012179	0		
57448041451	574480	4145180	7.826E-05	0.0007409	0		
57449041451	574490	4145180	8.635E-05	0.0008175	0		
57450041451	574500	4145180	0.0001004	0.0009506	0		
57451041451	574510	4145180	0.000116	0.0010982	0		
57452041451	574520	4145180	0.0001339	0.0012673	0		
57453041451	574530	4145180	0.0001528	0.001447	0		
57445041451	574450	4145190	0.0001731	0.0016384	0		
57446041451	574460	4145190	0.0001947	0.0018434	0		
57447041451	574470	4145190	0.0002204	0.0020868	0		
57448041451	574480	4145190	0.0002402	0.0022743	0		
57449041451	574490	4145190	0.0002494	0.0023607	0		
57450041451	574500	4145190	0.0002484	0.0023519	0		
57451041451	574510	4145190	0.0002448	0.0023174	0		
57452041451	574520	4145190	0.0002384	0.0022567	0		
57444041452	574440	4145200	0.0002226	0.0021071	0		
57445041452	574450	4145200	0.0002017	0.0019096	0		
57446041452	574460	4145200	0.0001789	0.0016937	0		
57447041452	574470	4145200	0.0001567	0.0014836	0		
57448041452	574480	4145200	8.083E-05	0.0007653	0		
57449041452	574490	4145200	9.091E-05	0.0008606	0		
57450041452	574500	4145200	0.0001053	0.0009968	0		
57451041452	574510	4145200	0.0001239	0.0011729	0		
57443041452	574430	4145210	0.000147	0.001392	0		
57444041452	574440	4145210	0.0001749	0.0016558	0		
57445041452	574450	4145210	0.0002005	0.001898	0		
57446041452	574460	4145210	0.0002398	0.0022703	0		
57447041452	574470	4145210	0.0002805	0.0026557	0		
57448041452	574480	4145210	0.0003182	0.0030121	0		
57449041452	574490	4145210	0.0003445	0.0032614	0		
57450041452	574500	4145210	0.0003505	0.0033181	0		
57451041452	574510	4145210	0.000343	0.003247	0		
57443041452	574430	4145220	0.0003302	0.0031259	0		
57444041452	574440	4145220	0.0003	0.0028402	0		
57445041452	574450	4145220	0.0002631	0.0024906	0		
57446041452	574460	4145220	0.000225	0.0021304	0		
57447041452	574470	4145220	0.0001904	0.0018026	0		
57448041452	574480	4145220	8.39E-05	0.0007943	0		
57449041452	574490	4145220	9.516E-05	0.0009009	0		
57450041452	574500	4145220	0.0001114	0.0010542	0		
57451041452	574510	4145220	0.0001328	0.0012573	0		
57452041452	574520	4145220	0.0001592	0.0015073	0		
57453041452	574530	4145220	0.0001888	0.0017871	0		
57444041452	574440	4145230	0.0002343	0.0022185	0		
57445041452	574450	4145230	0.0002978	0.0028194	0		

Garvey Reservoir Rehab - Unmitigated Facility Electrical System

Cancer Risk Summary & Maximum Annual GLC for Chronic Calculations

Cancer Risk Summary

Max Risk: 20.28296

XY	X	Y	Offroad Risk	Haul Risk	Total Risk
7446041452	574460	4145230	0.183135476	7.23309E-06	0.183143
7447041452	574470	4145230	0.21814708	7.21132E-06	0.218154
7448041452	574480	4145230	0.247782996	7.0518E-06	0.24779
7449041452	574490	4145230	0.265200595	6.46684E-06	0.265207
7450041452	574500	4145230	0.258023727	6.57814E-06	0.25803
7451041452	574510	4145230	0.241618131	5.65756E-06	0.241624
7452041452	574520	4145230	0.209753951	5.42805E-06	0.209759
7444041452	574440	4145240	0.173999592	5.11181E-06	0.174005
7445041452	574450	4145240	0.1411884	4.7718E-06	0.141193
7446041452	574460	4145240	0.113892162	4.54106E-06	0.113897
7447041452	574470	4145240	0.042225609	6.47913E-06	0.042232
7448041452	574480	4145240	0.048938256	7.36029E-06	0.048946
7449041452	574490	4145240	0.057192118	7.1634E-06	0.057199
7450041452	574500	4145240	0.068342725	7.56265E-06	0.06835
7451041452	574510	4145240	0.082092972	7.16023E-06	0.0821
7445041452	574450	4145250	0.101748121	7.53039E-06	0.101756
7446041452	574460	4145250	0.132776702	8.25401E-06	0.132785
7447041452	574470	4145250	0.177091309	8.8146E-06	0.1771
7448041452	574480	4145250	0.237625824	8.70653E-06	0.237635
7446041452	574460	4145260	0.313981016	8.71847E-06	0.31399
7447041452	574470	4145260	0.392425205	8.73038E-06	0.392434
7448041452	574480	4145260	0.45065718	8.12273E-06	0.450665
7447041452	574470	4145270	0.448512476	7.96522E-06	0.44852
7449041451	574490	4145130	0.388377192	6.87374E-06	0.388384
7448041451	574480	4145140	0.311548494	6.34068E-06	0.311555
7449041451	574490	4145140	0.241915233	6.03429E-06	0.241921
7449041451	574490	4145150	0.182142042	5.38781E-06	0.182147
7450041451	574500	4145150	0.139164393	4.91204E-06	0.139169
7446041451	574460	4145160	0.042866235	7.16061E-06	0.042873
7449041451	574490	4145160	0.04993169	8.27063E-06	0.04994
7450041451	574500	4145160	0.058946877	8.74272E-06	0.058956
7451041451	574510	4145160	0.070496713	8.29595E-06	0.070505
7446041451	574460	4145170	0.085955297	8.21084E-06	0.085964
7447041451	574470	4145170	0.764090415	9.62655E-06	0.7641
7448041451	574480	4145170	0.491787227	7.58231E-06	0.491795
7449041451	574490	4145170	0.301577011	6.39169E-06	0.301583
7450041451	574500	4145170	0.209447565	5.65772E-06	0.209453
7451041451	574510	4145170	0.167138395	5.6671E-06	0.167144
7452041451	574520	4145170	0.042912658	7.50552E-06	0.04292
7446041451	574460	4145180	0.050247361	8.6734E-06	0.050256
7447041451	574470	4145180	0.059550365	9.3812E-06	0.05956
7448041451	574480	4145180	0.071378735	9.01347E-06	0.071388
7449041451	574490	4145180	1.484311875	1.13533E-05	1.484323
7450041451	574500	4145180	0.709553645	9.16846E-06	0.709563
7451041451	574510	4145180	0.390698301	7.61022E-06	0.390706
7452041451	574520	4145180	0.291317711	7.66594E-06	0.291325
7453041451	574530	4145180	0.192800573	7.01035E-06	0.192808
7445041451	574450	4145190	0.043274751	1.01181E-05	0.043285
7446041451	574460	4145190	0.050070957	9.58921E-06	0.050081
7447041451	574470	4145190	0.059373961	1.0406E-05	0.059384
7448041451	574480	4145190	0.072019361	1.12648E-05	0.072031
7449041451	574490	4145190	4.378715853	1.97022E-05	4.378736
7450041451	574500	4145190	1.397103179	1.55698E-05	1.397119
7451041451	574510	4145190	0.626550798	1.16812E-05	0.626562
7452041451	574520	4145190	0.352037914	9.12061E-06	0.352047
7444041452	574440	4145200	0.223244235	7.90547E-06	0.223252
7445041452	574450	4145200	0.042921942	1.22029E-05	0.042934
7446041452	574460	4145200	0.049829562	1.26037E-05	0.049842
7447041452	574470	4145200	0.059011868	1.37206E-05	0.059026
7448041452	574480	4145200	0.071128055	1.35101E-05	0.071142
7449041452	574490	4145200	6.687931191	4.30883E-05	6.687974
7450041452	574500	4145200	1.814057861	2.26029E-05	1.81408

Max GLC for Chronic Calcs

Max GLC: 0.390862

XY	X	Y	2025	2026	2027	2034	2035
57446041452	574460	4145230	0.0003728	0.0035292	0		
57447041452	574470	4145230	0.0004441	0.0042039	0		
57448041452	574480	4145230	0.0005044	0.004775	0		
57449041452	574490	4145230	0.0005398	0.0051106	0		
57450041452	574500	4145230	0.0005252	0.0049723	0		
57451041452	574510	4145230	0.0004918	0.0046562	0		
57452041452	574520	4145230	0.000427	0.0040421	0		
57444041452	574440	4145240	0.0003542	0.0033531	0		
57445041452	574450	4145240	0.0002874	0.0027208	0		
57446041452	574460	4145240	0.0002318	0.0021948	0		
57447041452	574470	4145240	8.596E-05	0.0008138	0		
57448041452	574480	4145240	9.962E-05	0.0009432	0		
57449041452	574490	4145240	0.0001164	0.0011022	0		
57450041452	574500	4145240	0.0001391	0.0013171	0		
57451041452	574510	4145240	0.0001671	0.0015821	0		
57445041452	574450	4145250	0.0002071	0.0019608	0		
57446041452	574460	4145250	0.0002703	0.0025588	0		
57447041452	574470	4145250	0.0003605	0.0034128	0		
57448041452	574480	4145250	0.0004837	0.0045793	0		
57446041452	574460	4145260	0.0006391	0.0060507	0		
57447041452	574470	4145260	0.0007988	0.0075624	0		
57448041452	574480	4145260	0.0009174	0.0086845	0		
57447041452	574470	4145270	0.000913	0.0086432	0		
57449041451	574490	4145130	0.0007906	0.0074843	0		
57448041451	574480	4145140	0.0006342	0.0060038	0		
57449041451	574490	4145140	0.0004924	0.0046619	0		
57449041451	574490	4145150	0.0003708	0.00351	0		
57450041451	574500	4145150	0.0002833	0.0026818	0		
57446041451	574460	4145160	8.726E-05	0.0008261	0		
57449041451	574490	4145160	0.0001016	0.0009623	0		
57450041451	574500	4145160	0.00012	0.001136	0		
57451041451	574510	4145160	0.0001435	0.0013586	0		
57446041451	574460	4145170	0.000175	0.0016565	0		
57447041451	574470	4145170	0.0015554	0.0147246	0		
57448041451	574480	4145170	0.0010011	0.0094771	0		
57449041451	574490	4145170	0.0006139	0.0058116	0		
57450041451	574500	4145170	0.0004264	0.0040362	0		
57451041451	574510	4145170	0.0003402	0.0032209	0		
57452041451	574520	4145170	8.735E-05	0.000827	0		
57446041451	574460	4145180	0.0001023	0.0009684	0		
57447041451	574470	4145180	0.0001212	0.0011477	0		
57448041451	574480	4145180	0.0001453	0.0013756	0		
57449041451	574490	4145180	0.0030215	0.0286036	0		
57450041451	574500	4145180	0.0014444	0.0136736	0		
57451041451	574510	4145180	0.0007953	0.0075291	0		
57452041451	574520	4145180	0.000593	0.0056139	0		
57453041451	574530	4145180	0.0003925	0.0037155	0		
57445041451	574450	4145190	8.809E-05	0.0008341	0		
57446041451	574460	4145190	0.0001019	0.000965	0		
57447041451	574470	4145190	0.0001209	0.0011443	0		
57448041451	574480	4145190	0.0001466	0.001388	0		
57449041451	574490	4145190	0.0089134	0.0843805	0		
57450041451	574500	4145190	0.002844	0.0269231	0		
57451041451	574510	4145190	0.0012754	0.0120741	0		
57452041451	574520	4145190	0.0007166	0.0067841	0		
57444041452	574440	4145200	0.0004544	0.0043021	0		
57445041452	574450	4145200	8.737E-05	0.0008273	0		
57446041452	574460	4145200	0.0001014	0.0009604	0		
57447041452	574470	4145200	0.0001201	0.0011374	0		
57448041452	574480	4145200	0.0001448	0.0013708	0		
57449041452	574490	4145200	0.0136141	0.1288806	0		
57450041452	574500	4145200	0.0036927	0.0349581	0		

Garvey Reservoir Rehab - Unmitigated Facility Electrical System

Cancer Risk Summary & Maximum Annual GLC for Chronic Calculations

Cancer Risk Summary

Max Risk: 20.28296

XY	X	Y	Offroad Risk	Haul Risk	Total Risk
7451041452(	574510	4145200	0.762966998	1.54246E-05	0.762982
7443041452:	574430	4145210	0.417307491	1.13744E-05	0.417319
7444041452:	574440	4145210	0.25132965	9.33319E-06	0.251339
7445041452:	574450	4145210	0.040480136	1.45133E-05	0.040495
7446041452:	574460	4145210	0.048678292	1.42822E-05	0.048693
7447041452:	574470	4145210	0.057470651	1.60325E-05	0.057487
7448041452:	574480	4145210	0.06906691	1.65907E-05	0.069084
7449041452:	574490	4145210	4.463928396	0.000342455	4.464271
7450041452:	574500	4145210	3.395178538	6.72241E-05	3.395246
7451041452:	574510	4145210	1.666110393	3.06899E-05	1.666141
7443041452:	574430	4145220	0.804811946	1.92298E-05	0.804831
7444041452:	574440	4145220	0.448726018	1.3775E-05	0.44874
7445041452:	574450	4145220	0.285691343	1.06047E-05	0.285702
7446041452:	574460	4145220	0.037629814	1.71041E-05	0.037647
7447041452:	574470	4145220	0.04722992	1.78097E-05	0.047248
7448041452:	574480	4145220	0.055372369	1.98845E-05	0.055392
7449041452:	574490	4145220	0.06611446	2.1453E-05	0.066136
7450041452:	574500	4145220	1.13729684	0.000537614	1.137834
7451041452:	574510	4145220	1.698475932	0.000241802	1.698718
7452041452:	574520	4145220	1.678867206	7.80239E-05	1.678945
7453041452:	574530	4145220	1.185668745	3.74577E-05	1.185706
7444041452:	574440	4145230	0.740043729	2.27046E-05	0.740066
7445041452:	574450	4145230	0.460415121	1.59617E-05	0.460431
7446041452:	574460	4145230	0.306739157	1.14819E-05	0.306751
7447041452:	574470	4145230	0.036181442	2.09844E-05	0.036202
7448041452:	574480	4145230	0.044945949	2.26147E-05	0.044969
7449041452:	574490	4145230	0.050442334	2.50663E-05	0.050467
7450041452:	574500	4145230	0.062354264	2.80684E-05	0.062382
7451041452:	574510	4145230	0.435504983	9.99207E-05	0.435605
7452041452:	574520	4145230	0.65789505	0.000545708	0.658441
7444041452(	574440	4145240	0.874621611	0.000221091	0.874843
7445041452(	574450	4145240	0.906912875	7.19042E-05	0.906985
7446041452(	574460	4145240	0.777682827	4.29808E-05	0.777726
7447041452(	574470	4145240	0.570398536	2.66708E-05	0.570425
7448041452(	574480	4145240	0.409935649	1.68734E-05	0.409953
7449041452(	574490	4145240	0.290537818	1.3154E-05	0.290551
7450041452(	574500	4145240	0.037815503	2.67017E-05	0.037842
7451041452(	574510	4145240	0.038966773	3.00993E-05	0.038997
7445041452:	574450	4145250	0.044853104	3.24733E-05	0.044886
7446041452:	574460	4145250	0.058185553	3.89941E-05	0.058225
7447041452:	574470	4145250	0.068064191	3.81891E-05	0.068102
7448041452:	574480	4145250	0.130901246	4.88706E-05	0.13095
7446041452(	574460	4145260	0.170471507	5.67454E-05	0.170528
7447041452(	574470	4145260	0.226883733	7.01314E-05	0.226954
7448041452(	574480	4145260	0.311502072	0.000120075	0.311622
7447041452:	574470	4145270	0.420984127	0.000529376	0.421514
7449041451:	574490	4145130	0.528460744	0.000221734	0.528682
7448041451(	574480	4145140	0.548468701	7.10485E-05	0.54854
7449041451(	574490	4145140	0.525526863	4.25298E-05	0.525569
7449041451:	574490	4145150	0.433610958	2.82742E-05	0.433639
7450041451:	574500	4145150	0.333729009	2.01209E-05	0.333749
7446041451(	574460	4145160	0.255238397	1.46911E-05	0.255253
7449041451(	574490	4145160	0.035977185	4.69082E-05	0.036024
7450041451(	574500	4145160	0.040805091	5.35546E-05	0.040859
7451041451(	574510	4145160	0.042717684	5.20021E-05	0.04277
7446041451:	574460	4145170	0.053859006	6.38421E-05	0.053923
7447041451:	574470	4145170	0.063032028	6.45387E-05	0.063097
7448041451:	574480	4145170	0.074888251	6.5891E-05	0.074954
7449041451:	574490	4145170	0.090383973	6.83773E-05	0.090452
7450041451:	574500	4145170	0.111441071	7.59386E-05	0.111517
7451041451:	574510	4145170	0.139972139	8.3123E-05	0.140055
7452041451:	574520	4145170	0.178836783	9.64219E-05	0.178933

Max GLC for Chronic Calcs

Max GLC: 0.390862

XY	X	Y	2025	2026	2027	2034	2035
574510414520	574510	4145200	0.0015531	0.014703	0		
574430414521	574430	4145210	0.0008495	0.0080419	0		
574440414521	574440	4145210	0.0005116	0.0048434	0		
574450414521	574450	4145210	8.24E-05	0.0007803	0		
574460414521	574460	4145210	9.909E-05	0.0009382	0		
574470414521	574470	4145210	0.000117	0.0011077	0		
574480414521	574480	4145210	0.0001406	0.0013312	0		
574490414521	574490	4145210	0.0090869	0.0860265	0		
574500414521	574500	4145210	0.0069113	0.0654277	0		
574510414521	574510	4145210	0.0033916	0.0321072	0		
574430414522	574430	4145220	0.0016383	0.0155094	0		
574440414522	574440	4145220	0.0009134	0.0086474	0		
574450414522	574450	4145220	0.0005816	0.0055056	0		
574460414522	574460	4145220	7.66E-05	0.0007254	0		
574470414522	574470	4145220	9.614E-05	0.0009104	0		
574480414522	574480	4145220	0.0001127	0.0010673	0		
574490414522	574490	4145220	0.0001346	0.0012743	0		
574500414522	574500	4145220	0.0023151	0.0219229	0		
574510414522	574510	4145220	0.0034575	0.0327335	0		
574520414522	574520	4145220	0.0034175	0.0323536	0		
574530414522	574530	4145220	0.0024136	0.0228489	0		
574440414523	574440	4145230	0.0015064	0.0142613	0		
574450414523	574450	4145230	0.0009372	0.0088726	0		
574460414523	574460	4145230	0.0006244	0.0059112	0		
574470414523	574470	4145230	7.365E-05	0.0006975	0		
574480414523	574480	4145230	9.149E-05	0.0008664	0		
574490414523	574490	4145230	0.0001027	0.0009724	0		
574500414523	574500	4145230	0.0001269	0.0012019	0		
574510414523	574510	4145230	0.0008865	0.0083936	0		
574520414523	574520	4145230	0.0013392	0.0126847	0		
574440414524	574440	4145240	0.0017804	0.0168571	0		
574450414524	574450	4145240	0.0018461	0.0174776	0		
574460414524	574460	4145240	0.0015831	0.0149869	0		
574470414524	574470	4145240	0.0011611	0.0109922	0		
574480414524	574480	4145240	0.0008345	0.0078999	0		
574490414524	574490	4145240	0.0005914	0.005599	0		
574500414524	574500	4145240	7.698E-05	0.0007291	0		
574510414524	574510	4145240	7.932E-05	0.0007513	0		
574450414525	574450	4145250	9.13E-05	0.0008647	0		
574460414525	574460	4145250	0.0001184	0.0011217	0		
574470414525	574470	4145250	0.0001386	0.0013121	0		
574480414525	574480	4145250	0.0002665	0.0025231	0		
574460414526	574460	4145260	0.000347	0.0032858	0		
574470414526	574470	4145260	0.0004618	0.004373	0		
574480414526	574480	4145260	0.0006341	0.0060043	0		
574470414527	574470	4145270	0.000857	0.0081191	0		
574490414513	574490	4145130	0.0010757	0.0101864	0		
574480414514	574480	4145140	0.0011165	0.0105702	0		
574490414514	574490	4145140	0.0010698	0.0101277	0		
574490414515	574490	4145150	0.0008827	0.0083563	0		
574500414515	574500	4145150	0.0006793	0.0064314	0		
574460414516	574460	4145160	0.0005196	0.0049188	0		
574490414516	574490	4145160	7.324E-05	0.0006939	0		
574500414516	574500	4145160	8.306E-05	0.000787	0		
574510414516	574510	4145160	8.696E-05	0.0008238	0		
574460414517	574460	4145170	0.0001096	0.0010387	0		
574470414517	574470	4145170	0.0001283	0.0012155	0		
574480414517	574480	4145170	0.0001524	0.0014439	0		
574490414517	574490	4145170	0.000184	0.0017426	0		
574500414517	574500	4145170	0.0002269	0.0021485	0		
574510414517	574510	4145170	0.0002849	0.0026984	0		
574520414517	574520	4145170	0.000364	0.0034475	0		

Garvey Reservoir Rehab - Unmitigated Facility Electrical System

Cancer Risk Summary & Maximum Annual GLC for Chronic Calculations

Cancer Risk Summary

Max Risk: 20.28296

XY	X	Y	Offroad Risk	Haul Risk	Total Risk
7446041451	574460	4145180	0.228731336	0.000151336	0.228883
7447041451	574470	4145180	0.352873513	0.000201245	0.353075
7448041451	574480	4145180	0.383400735	8.10824E-05	0.383482
7449041451	574490	4145180	0.371377392	4.42168E-05	0.371422
7450041451	574500	4145180	0.327907668	2.89701E-05	0.327937
7451041451	574510	4145180	0.270594852	2.13679E-05	0.270616
7452041451	574520	4145180	0.218574164	1.56902E-05	0.21859
7453041451	574530	4145180	0.03425028	0.000136208	0.034386
7445041451	574450	4145190	0.038391138	0.000169248	0.03856
7446041451	574460	4145190	0.041083624	0.000124078	0.041208
7447041451	574470	4145190	0.049727433	0.000162135	0.04989
7448041451	574480	4145190	0.057247825	0.000173625	0.057421
7449041451	574490	4145190	0.066912922	0.000173564	0.067086
7450041451	574500	4145190	0.079456193	0.000179543	0.079636
7451041451	574510	4145190	0.095731807	0.000186666	0.095918
7452041451	574520	4145190	0.116519657	0.00019127	0.116711
7444041452	574440	4145200	0.14298958	0.000206057	0.143196
7445041452	574450	4145200	0.174742347	0.000248144	0.17499
7446041452	574460	4145200	0.214024791	0.000791457	0.214816
7447041452	574470	4145200	0.249742012	0.000274997	0.250017
7448041452	574480	4145200	0.270613421	9.67223E-05	0.27071
7449041452	574490	4145200	0.269833528	5.18747E-05	0.269885
7450041452	574500	4145200	0.249101386	3.2625E-05	0.249134
7451041452	574510	4145200	0.216837975	2.23354E-05	0.21686
7443041452	574430	4145210	0.183599698	1.62588E-05	0.183616
7444041452	574440	4145210	0.032272695	0.000548387	0.032821
7445041452	574450	4145210	0.036088598	0.000706263	0.036795
7446041452	574460	4145210	0.040368722	0.000691573	0.04106
7447041452	574470	4145210	0.04591153	0.00076182	0.046673
7448041452	574480	4145210	0.052354928	0.000718502	0.053073
7449041452	574490	4145210	0.060172422	0.00078061	0.060953
7450041452	574500	4145210	0.070403869	0.000755512	0.071159
7451041452	574510	4145210	0.084033419	0.000733904	0.084767
7443041452	574430	4145220	0.099556994	0.000705709	0.100263
7444041452	574440	4145220	0.117262411	0.000713454	0.117976
7445041452	574450	4145220	0.138625896	0.000733286	0.139359
7446041452	574460	4145220	0.163554603	0.000770376	0.164325
7447041452	574470	4145220	0.185438016	0.000378787	0.185817
7448041452	574480	4145220	0.20056236	0.00010137	0.200664
7449041452	574490	4145220	0.203681931	5.1835E-05	0.203734
7450041452	574500	4145220	0.192717013	3.21527E-05	0.192749
7451041452	574510	4145220	0.174333832	2.22254E-05	0.174356
7452041452	574520	4145220	0.153675965	1.64495E-05	0.153692
7453041452	574530	4145220	0.062567806	7.3929E-06	0.062575
7444041452	574440	4145230	0.068481991	7.56953E-06	0.06849
7445041452	574450	4145230	0.074730416	7.05538E-06	0.074737
7446041452	574460	4145230	0.08263147	7.25934E-06	0.082639
7447041452	574470	4145230	0.089882613	6.97198E-06	0.08989
7448041452	574480	4145230	0.100086207	7.1344E-06	0.100093
7449041452	574490	4145230	0.114597779	7.45613E-06	0.114605
7450041452	574500	4145230	0.128348027	7.5188E-06	0.128356
7451041452	574510	4145230	0.147446109	7.9425E-06	0.147454
7452041452	574520	4145230	0.169589486	8.17382E-06	0.169598
7444041452	574440	4145240	0.193608319	8.15125E-06	0.193616
7445041452	574450	4145240	0.220375344	8.09712E-06	0.220383
7446041452	574460	4145240	0.248952835	8.06303E-06	0.248961
7447041452	574470	4145240	0.277428196	8.10419E-06	0.277436
7448041452	574480	4145240	0.304575883	8.11409E-06	0.304584
7449041452	574490	4145240	0.329745986	8.0074E-06	0.329754
7450041452	574500	4145240	0.349289721	7.83748E-06	0.349298
7451041452	574510	4145240	0.363077107	7.39168E-06	0.363084
7445041452	574450	4145250	0.363234942	7.39464E-06	0.363242

Max GLC for Chronic Calcs

Max GLC: 0.390862

XY	X	Y	2025	2026	2027	2034	2035
574460414518	574460	4145180	0.0004656	0.0044096	0		
574470414518	574470	4145180	0.0007183	0.0068025	0		
574480414518	574480	4145180	0.0007805	0.0073893	0		
574490414518	574490	4145180	0.000756	0.0071572	0		
574500414518	574500	4145180	0.0006675	0.0063193	0		
574510414518	574510	4145180	0.0005508	0.0052148	0		
574520414518	574520	4145180	0.0004449	0.0042122	0		
574530414518	574530	4145180	6.972E-05	0.0006617	0		
574450414519	574450	4145190	7.815E-05	0.0007419	0		
574460414519	574460	4145190	8.363E-05	0.0007932	0		
574470414519	574470	4145190	0.0001012	0.0009603	0		
574480414519	574480	4145190	0.0001165	0.0011053	0		
574490414519	574490	4145190	0.0001362	0.0012916	0		
574500414519	574500	4145190	0.0001617	0.0015334	0		
574510414519	574510	4145190	0.0001949	0.0018471	0		
574520414519	574520	4145190	0.0002372	0.0022477	0		
574440414520	574440	4145200	0.0002911	0.002758	0		
574450414520	574450	4145200	0.0003557	0.0033704	0		
574460414520	574460	4145200	0.0004357	0.0041341	0		
574470414520	574470	4145200	0.0005084	0.004816	0		
574480414520	574480	4145200	0.0005509	0.0052161	0		
574490414520	574490	4145200	0.0005493	0.0052005	0		
574500414520	574500	4145200	0.0005071	0.0048007	0		
574510414520	574510	4145200	0.0004414	0.0041789	0		
574430414521	574430	4145210	0.0003737	0.0035383	0		
574440414521	574440	4145210	6.569E-05	0.0006286	0		
574450414521	574450	4145210	7.346E-05	0.0007041	0		
574460414521	574460	4145210	8.218E-05	0.0007864	0		
574470414521	574470	4145210	9.346E-05	0.0008941	0		
574480414521	574480	4145210	0.0001066	0.0010177	0		
574490414521	574490	4145210	0.0001225	0.0011691	0		
574500414521	574500	4145210	0.0001433	0.001366	0		
574510414521	574510	4145210	0.0001711	0.0016284	0		
574430414522	574430	4145220	0.0002027	0.0019272	0		
574440414522	574440	4145220	0.0002387	0.0022685	0		
574450414522	574450	4145220	0.0002822	0.0026804	0		
574460414522	574460	4145220	0.0003329	0.0031612	0		
574470414522	574470	4145220	0.0003775	0.0035781	0		
574480414522	574480	4145220	0.0004083	0.0038662	0		
574490414522	574490	4145220	0.0004146	0.0039257	0		
574500414522	574500	4145220	0.0003923	0.0037142	0		
574510414522	574510	4145220	0.0003549	0.0033598	0		
574520414522	574520	4145220	0.0003128	0.0029616	0		
574530414522	574530	4145220	0.0001274	0.0012058	0		
574440414523	574440	4145230	0.0001394	0.0013198	0		
574450414523	574450	4145230	0.0001521	0.0014402	0		
574460414523	574460	4145230	0.0001682	0.0015924	0		
574470414523	574470	4145230	0.000183	0.0017322	0		
574480414523	574480	4145230	0.0002037	0.0019288	0		
574490414523	574490	4145230	0.0002333	0.0022085	0		
574500414523	574500	4145230	0.0002613	0.0024734	0		
574510414523	574510	4145230	0.0003001	0.0028415	0		
574520414523	574520	4145230	0.0003452	0.0032682	0		
574440414524	574440	4145240	0.0003941	0.003731	0		
574450414524	574450	4145240	0.0004486	0.0042469	0		
574460414524	574460	4145240	0.0005068	0.0047976	0		
574470414524	574470	4145240	0.0005647	0.0053463	0		
574480414524	574480	4145240	0.00062	0.0058694	0		
574490414524	574490	4145240	0.0006712	0.0063545	0		
574500414524	574500	4145240	0.000711	0.0067311	0		
574510414524	574510	4145240	0.0007391	0.0069968	0		
574450414525	574450	4145250	0.0007394	0.0069998	0		

Garvey Reservoir Rehab - Unmitigated Facility Electrical System

Cancer Risk Summary & Maximum Annual GLC for Chronic Calculations

Cancer Risk Summary

Max Risk: 20.28296

XY	X	Y	Offroad Risk	Haul Risk	Total Risk
7446041452	574460	4145250	0.353690543	7.37013E-06	0.353698
7447041452	574470	4145250	0.33846407	7.17216E-06	0.338471
7448041452	574480	4145250	0.317899047	6.33661E-06	0.317905
7446041452	574460	4145260	0.291559106	6.12562E-06	0.291565
7447041452	574470	4145260	0.063821205	7.89732E-06	0.063829
7448041452	574480	4145260	0.069744674	7.60833E-06	0.069752
7447041452	574470	4145270	0.076290201	7.20579E-06	0.076297
7449041451	574490	4145130	0.083801308	7.29301E-06	0.083809
7448041451	574480	4145140	0.093243579	7.48502E-06	0.093251
7449041451	574490	4145140	0.105146224	7.70976E-06	0.105154
7449041451	574490	4145150	0.120920479	8.31629E-06	0.120929
7450041451	574500	4145150	0.13790171	8.51851E-06	0.13791
7446041451	574460	4145160	0.159618003	8.90016E-06	0.159627
7449041451	574490	4145160	0.185224474	9.02731E-06	0.185234
7450041451	574500	4145160	0.215361749	9.02323E-06	0.215371
7451041451	574510	4145160	0.251088255	8.91219E-06	0.251097
7446041451	574460	4145170	0.291670519	8.86237E-06	0.291679
7447041451	574470	4145170	0.335650887	8.94537E-06	0.33566
7448041451	574480	4145170	0.380318302	9.01005E-06	0.380327
7449041451	574490	4145170	0.423240245	8.96957E-06	0.423249
7450041451	574500	4145170	0.459087447	8.85728E-06	0.459096
7451041451	574510	4145170	0.486931467	8.36697E-06	0.48694
7452041451	574520	4145170	0.493523416	8.16369E-06	0.493532
7446041451	574460	4145180	0.479949572	8.18976E-06	0.479958
7447041451	574470	4145180	0.452421223	8.02209E-06	0.452429
7448041451	574480	4145180	0.405934058	6.99056E-06	0.405941
7449041451	574490	4145180	0.36745936	6.7801E-06	0.367466
7450041451	574500	4145180	0.06487963	8.43152E-06	0.064888
7451041451	574510	4145180	0.071230184	8.37787E-06	0.071239
7452041451	574520	4145180	0.077552884	7.59786E-06	0.07756
7453041451	574530	4145180	0.086057426	7.81603E-06	0.086065
7445041451	574450	4145190	0.09634458	8.05151E-06	0.096353
7446041451	574460	4145190	0.11104184	8.98059E-06	0.111051
7447041451	574470	4145190	0.127103912	9.40788E-06	0.127113
7448041451	574480	4145190	0.146489812	9.65444E-06	0.146499
7449041451	574490	4145190	0.170610774	9.89509E-06	0.170621
7450041451	574500	4145190	0.200534507	1.00113E-05	0.200545
7451041451	574510	4145190	0.237486558	1.00415E-05	0.237497
7452041451	574520	4145190	0.283156692	9.93802E-06	0.283167
7444041452	574440	4145200	0.3381484	9.8587E-06	0.338158
7445041452	574450	4145200	0.404569246	1.00714E-05	0.404579
7446041452	574460	4145200	0.476152238	1.02566E-05	0.476162
7447041452	574470	4145200	0.556007662	1.0121E-05	0.556018
7448041452	574480	4145200	0.630923766	9.73046E-06	0.630933
7449041452	574490	4145200	0.67529408	9.21761E-06	0.675303
7450041452	574500	4145200	0.675999697	8.78776E-06	0.676008
7451041452	574510	4145200	0.687995187	9.14168E-06	0.688004
7443041452	574430	4145210	0.567808179	8.61705E-06	0.567817
7444041452	574440	4145210	0.470256622	7.36466E-06	0.470264
7445041452	574450	4145210	0.065678092	8.91571E-06	0.065687
7446041452	574460	4145210	0.071397304	7.92651E-06	0.071405
7447041452	574470	4145210	0.078936265	8.13483E-06	0.078944
7448041452	574480	4145210	0.088499232	8.50324E-06	0.088508
7449041452	574490	4145210	0.79274218	9.34897E-06	0.792752
7450041452	574500	4145210	0.589784436	8.12419E-06	0.589793
7451041452	574510	4145210	0.066235158	9.46488E-06	0.066245
7443041452	574430	4145220	0.072167912	8.50751E-06	0.072176
7444041452	574440	4145220	0.080180379	8.81224E-06	0.080189
7445041452	574450	4145220	1.032457002	9.93355E-06	1.032467
7446041452	574460	4145220	0.775668105	9.08064E-06	0.775677
7447041452	574470	4145220	0.066095891	9.28566E-06	0.066105
7448041452	574480	4145220	0.072762115	9.24546E-06	0.072771

Max GLC for Chronic Calcs

Max GLC: 0.390862

XY	X	Y	2025	2026	2027	2034	2035
57446041452	574460	4145250	0.00072	0.0068159	0		
57447041452	574470	4145250	0.000689	0.0065225	0		
57448041452	574480	4145250	0.0006471	0.0061262	0		
57446041452	574460	4145260	0.0005935	0.0056186	0		
57447041452	574470	4145260	0.0001299	0.00123	0		
57448041452	574480	4145260	0.000142	0.0013441	0		
57447041452	574470	4145270	0.0001553	0.0014702	0		
57449041451	574490	4145130	0.0001706	0.001615	0		
57448041451	574480	4145140	0.0001898	0.0017969	0		
57449041451	574490	4145140	0.000214	0.0020263	0		
57449041451	574490	4145150	0.0002461	0.0023303	0		
57450041451	574500	4145150	0.0002807	0.0026575	0		
57446041451	574460	4145160	0.0003249	0.003076	0		
57449041451	574490	4145160	0.000377	0.0035695	0		
57450041451	574500	4145160	0.0004384	0.0041502	0		
57451041451	574510	4145160	0.0005111	0.0048387	0		
57446041451	574460	4145170	0.0005937	0.0056208	0		
57447041451	574470	4145170	0.0006833	0.0064683	0		
57448041451	574480	4145170	0.0007742	0.007329	0		
57449041451	574490	4145170	0.0008616	0.0081562	0		
57450041451	574500	4145170	0.0009345	0.008847	0		
57451041451	574510	4145170	0.0009912	0.0093835	0		
57452041451	574520	4145170	0.0010046	0.0095106	0		
57446041451	574460	4145180	0.000977	0.009249	0		
57447041451	574470	4145180	0.000921	0.0087185	0		
57448041451	574480	4145180	0.0008263	0.0078227	0		
57449041451	574490	4145180	0.000748	0.0070812	0		
57450041451	574500	4145180	0.0001321	0.0012504	0		
57451041451	574510	4145180	0.000145	0.0013727	0		
57452041451	574520	4145180	0.0001579	0.0014946	0		
57453041451	574530	4145180	0.0001752	0.0016585	0		
57445041451	574450	4145190	0.0001961	0.0018567	0		
57446041451	574460	4145190	0.000226	0.0021399	0		
57447041451	574470	4145190	0.0002587	0.0024495	0		
57448041451	574480	4145190	0.0002982	0.0028231	0		
57449041451	574490	4145190	0.0003473	0.0032879	0		
57450041451	574500	4145190	0.0004082	0.0038645	0		
57451041451	574510	4145190	0.0004834	0.0045766	0		
57452041451	574520	4145190	0.0005764	0.0054567	0		
57444041452	574440	4145200	0.0006883	0.0065164	0		
57445041452	574450	4145200	0.0008235	0.0077964	0		
57446041452	574460	4145200	0.0009693	0.0091758	0		
57447041452	574470	4145200	0.0011318	0.0107147	0		
57448041452	574480	4145200	0.0012843	0.0121584	0		
57449041452	574490	4145200	0.0013746	0.0130134	0		
57450041452	574500	4145200	0.0013761	0.013027	0		
57451041452	574510	4145200	0.0014005	0.0132581	0		
57443041452	574430	4145210	0.0011558	0.0109421	0		
57444041452	574440	4145210	0.0009573	0.0090622	0		
57445041452	574450	4145210	0.0001337	0.0012658	0		
57446041452	574460	4145210	0.0001453	0.001376	0		
57447041452	574470	4145210	0.0001607	0.0015212	0		
57448041452	574480	4145210	0.0001802	0.0017055	0		
57449041452	574490	4145210	0.0016137	0.0152767	0		
57450041452	574500	4145210	0.0012006	0.0113656	0		
57451041452	574510	4145210	0.0001348	0.0012765	0		
57443041452	574430	4145220	0.0001469	0.0013908	0		
57444041452	574440	4145220	0.0001632	0.0015452	0		
57445041452	574450	4145220	0.0021017	0.0198961	0		
57446041452	574460	4145220	0.001579	0.0149477	0		
57447041452	574470	4145220	0.0001345	0.0012738	0		
57448041452	574480	4145220	0.0001481	0.0014023	0		

Garvey Reservoir Rehab - Unmitigated Facility Electrical System

Cancer Risk Summary & Maximum Annual GLC for Chronic Calculations

Cancer Risk Summary

Max Risk: 20.28296

XY	X	Y	Offroad Risk	Haul Risk	Total Risk
7449041452	574490	4145220	1.493874843	1.14159E-05	1.493886
7450041452	574500	4145220	1.017490494	1.03466E-05	1.017501
7451041452	574510	4145220	0.066207305	1.00104E-05	0.066217
7452041452	574520	4145220	0.073170631	1.03435E-05	0.073181
7453041452	574530	4145220	2.587906217	1.52409E-05	2.587921
7444041452	574440	4145230	1.650921057	1.42619E-05	1.650935
7445041452	574450	4145230	0.066216589	1.10392E-05	0.066228
7446041452	574460	4145230	0.073300613	1.16026E-05	0.073312
7447041452	574470	4145230	4.206359606	2.05142E-05	4.20638
7448041452	574480	4145230	2.305306591	1.88928E-05	2.305325
7449041452	574490	4145230	0.066374424	1.3746E-05	0.066388
7450041452	574500	4145230	0.072892098	1.26618E-05	0.072905
7451041452	574510	4145230	18.43249053	4.35206E-05	18.43253
7452041452	574520	4145230	6.010650241	3.15292E-05	6.010682
7444041452	574440	4145240	2.782118024	2.37895E-05	2.782142
7445041452	574450	4145240	0.065715229	1.48093E-05	0.06573
7446041452	574460	4145240	0.072186481	1.38608E-05	0.0722
7447041452	574470	4145240	20.28270198	0.000257966	20.28296
7448041452	574480	4145240	10.97506538	7.45134E-05	10.97514
7449041452	574490	4145240	5.6062574	4.26948E-05	5.6063
7450041452	574500	4145240	2.921783776	2.93964E-05	2.921813
7451041452	574510	4145240	0.064814639	1.60283E-05	0.064831
7445041452	574450	4145250	0.071193046	1.53265E-05	0.071208
7446041452	574460	4145250	7.702849896	0.000375798	7.703226
7447041452	574470	4145250	5.665445671	9.55639E-05	5.665541
7448041452	574480	4145250	3.755470314	5.15251E-05	3.755522
7446041452	574460	4145260	2.421027786	3.49518E-05	2.421063
7447041452	574470	4145260	0.063644801	1.71572E-05	0.063662
7448041452	574480	4145260	0.069939647	1.70758E-05	0.069957
7447041452	574470	4145270	3.250285648	0.00099557	3.251281
7457041450	574570	4145030	3.953525877	0.000263543	3.953789
7463041450	574630	4145080	3.813702289	0.000116152	3.813818
7461041450	574610	4145090	3.031098712	6.40332E-05	3.031163
7462041450	574620	4145090	2.162521268	4.15479E-05	2.162563
7463041450	574630	4145090	0.062447108	1.9441E-05	0.062467
7464041450	574640	4145090	0.068463422	1.92959E-05	0.068483
7460041451	574600	4145100	0.075788841	2.05695E-05	0.075809
7461041451	574610	4145100	1.541327589	0.000808834	1.542136
7462041451	574620	4145100	2.024675264	0.000596274	2.025272
7463041451	574630	4145100	2.380361961	0.000219633	2.380582
7464041451	574640	4145100	2.411223423	0.000115484	2.411339
7465041451	574650	4145100	2.130062884	6.94477E-05	2.130132
7459041451	574590	4145110	1.715373604	4.61391E-05	1.71542
7460041451	574600	4145110	0.060970883	2.16039E-05	0.060992
7461041451	574610	4145110	0.066745802	2.19904E-05	0.066768
7462041451	574620	4145110	0.073644137	2.30489E-05	0.073667
7463041451	574630	4145110	0.855653511	0.000194442	0.855848
7464041451	574640	4145110	1.105636917	0.000770149	1.106407
7465041451	574650	4145110	1.374718407	0.000596473	1.375315
7466041451	574660	4145110	1.580220086	0.00021143	1.580432
7460041451	574600	4145120	1.633429182	0.00011568	1.633545
7461041451	574610	4145120	1.526491062	7.31496E-05	1.526564
7462041451	574620	4145120	1.317349884	5.02444E-05	1.3174
7463041451	574630	4145120	0.059466805	2.45194E-05	0.059491
7464041451	574640	4145120	0.064870346	2.52504E-05	0.064896
7465041451	574650	4145120	0.071295175	2.61606E-05	0.071321
7466041451	574660	4145120	0.527560154	0.000104752	0.527665
7460041451	574600	4145130	0.669194207	0.000203981	0.669398
7462041451	574620	4145130	0.827985895	0.000773958	0.82876
7463041451	574630	4145130	0.990788459	0.000582364	0.991371
7464041451	574640	4145130	1.1227667	0.000195439	1.122962
7465041451	574650	4145130	1.177990518	0.000106947	1.178097

Max GLC for Chronic Calcs

Max GLC: 0.390862

XY	X	Y	2025	2026	2027	2034	2035
57449041452	574490	4145220	0.003041	0.0287879	0		
57450041452	574500	4145220	0.0020712	0.0196077	0		
57451041452	574510	4145220	0.0001348	0.001276	0		
57452041452	574520	4145220	0.0001489	0.0014102	0		
57453041452	574530	4145220	0.005268	0.0498705	0		
57444041452	574440	4145230	0.0033606	0.0318143	0		
57445041452	574450	4145230	0.0001348	0.0012762	0		
57446041452	574460	4145230	0.0001492	0.0014127	0		
57447041452	574470	4145230	0.0085626	0.0810591	0		
57448041452	574480	4145230	0.0046927	0.0444247	0		
57449041452	574490	4145230	0.0001351	0.0012792	0		
57450041452	574500	4145230	0.0001484	0.0014048	0		
57451041452	574510	4145230	0.0375216	0.3552045	0		
57452041452	574520	4145230	0.0122354	0.1158289	0		
57444041452	574440	4145240	0.0056633	0.0536132	0		
57445041452	574450	4145240	0.0001338	0.0012665	0		
57446041452	574460	4145240	0.0001469	0.0013912	0		
57447041452	574470	4145240	0.0412879	0.3908618	0		
57448041452	574480	4145240	0.0223411	0.2114963	0		
57449041452	574490	4145240	0.0114122	0.1080361	0		
57450041452	574500	4145240	0.0059476	0.0563047	0		
57451041452	574510	4145240	0.0001319	0.0012492	0		
57445041452	574450	4145250	0.0001449	0.0013721	0		
57446041452	574460	4145250	0.0156801	0.1484427	0		
57447041452	574470	4145250	0.0115327	0.1091774	0		
57448041452	574480	4145250	0.0076447	0.0723706	0		
57446041452	574460	4145260	0.0049283	0.0466549	0		
57447041452	574470	4145260	0.0001296	0.0012267	0		
57448041452	574480	4145260	0.0001424	0.001348	0		
57447041452	574470	4145270	0.0066163	0.062647	0		
57457041450	574570	4145030	0.0080479	0.0761898	0		
57463041450	574630	4145080	0.0077632	0.0734935	0		
57461041450	574610	4145090	0.0061702	0.0584117	0		
57462041450	574620	4145090	0.0044021	0.0416735	0		
57463041450	574630	4145090	0.0001271	0.0012036	0		
57464041450	574640	4145090	0.0001394	0.0013196	0		
57460041451	574600	4145100	0.0001543	0.0014607	0		
57461041451	574610	4145100	0.0031376	0.0297121	0		
57462041451	574620	4145100	0.0041215	0.0390239	0		
57463041451	574630	4145100	0.0048455	0.0458736	0		
57464041451	574640	4145100	0.0049083	0.046467	0		
57465041451	574650	4145100	0.004336	0.0410483	0		
57459041451	574590	4145110	0.0034918	0.0330567	0		
57460041451	574600	4145110	0.0001241	0.0011752	0		
57461041451	574610	4145110	0.0001359	0.0012865	0		
57462041451	574620	4145110	0.0001499	0.0014194	0		
57463041451	574630	4145110	0.0017418	0.0164913	0		
57464041451	574640	4145110	0.0022507	0.0213157	0		
57465041451	574650	4145110	0.0027984	0.0264989	0		
57466041451	574660	4145110	0.0032167	0.0304543	0		
57460041451	574600	4145120	0.003325	0.0314785	0		
57461041451	574610	4145120	0.0031074	0.0294172	0		
57462041451	574620	4145120	0.0026816	0.0253867	0		
57463041451	574630	4145120	0.0001211	0.0011463	0		
57464041451	574640	4145120	0.0001321	0.0012504	0		
57465041451	574650	4145120	0.0001451	0.0013742	0		
57466041451	574660	4145120	0.0010739	0.0101677	0		
57460041451	574600	4145130	0.0013622	0.0128982	0		
57462041451	574620	4145130	0.0016855	0.0159652	0		
57463041451	574630	4145130	0.0020169	0.0191002	0		
57464041451	574640	4145130	0.0022855	0.0216387	0		
57465041451	574650	4145130	0.0023979	0.0227018	0		

Garvey Reservoir Rehab - Unmitigated Facility Electrical System

Cancer Risk Summary & Maximum Annual GLC for Chronic Calculations

Cancer Risk Summary

Max Risk: 20.28296

XY	X	Y	Offroad Risk	Haul Risk	Total Risk
7463041451	574630	4145140	1.133833746	7.57312E-05	1.133909
7464041451	574640	4145140	1.024899473	5.31845E-05	1.024953
7459041451	574590	4145150	0.057730616	2.7968E-05	0.057759
7460041451	574600	4145150	0.062818486	2.91623E-05	0.062848
7460041451	574600	4145160	0.068825515	3.02964E-05	0.068856
7461041451	574610	4145160	0.292923918	5.96647E-05	0.292984
7461041451	574610	4145170	0.353374873	7.57992E-05	0.353451
7457041450	574570	4145030	0.432831066	0.000109626	0.432941
7463041450	574630	4145080	0.532453051	0.000202796	0.532656
7461041450	574610	4145090	0.640839543	0.000759853	0.641599
7462041450	574620	4145090	0.741687074	0.000502607	0.74219
7463041450	574630	4145090	0.830975483	0.000192516	0.831168
7464041450	574640	4145090	0.862988214	0.000106259	0.863094
7460041451	574600	4145100	0.839610007	6.62274E-05	0.839676
7461041451	574610	4145100	0.794088424	4.7978E-05	0.794136
7462041451	574620	4145100	0.055910866	3.2525E-05	0.055943
7463041451	574630	4145100	0.060701635	3.42981E-05	0.060736
7464041451	574640	4145100	0.066225873	3.54414E-05	0.066261
7465041451	574650	4145100	0.071815103	3.41086E-05	0.071849
7459041451	574590	4145110	0.218193502	5.6439E-05	0.21825
7460041451	574600	4145110	0.256696053	6.60404E-05	0.256762
7461041451	574610	4145110	0.30348032	8.29797E-05	0.303563
7462041451	574620	4145110	0.362612885	0.00011848	0.362731
7463041451	574630	4145110	0.431614805	0.0002078	0.431823
7464041451	574640	4145110	0.509539066	0.000692152	0.510231
7465041451	574650	4145110	0.579432291	0.000484706	0.579917
7466041451	574660	4145110	0.640858112	0.000193902	0.641052
7460041451	574600	4145120	0.659185586	0.000103851	0.659289
7461041451	574610	4145120	0.654534084	6.699E-05	0.654601
7462041451	574620	4145120	0.625325252	4.7704E-05	0.625373
7463041451	574630	4145120	0.053589758	3.79568E-05	0.053628
7464041451	574640	4145120	0.058501224	4.11885E-05	0.058542
7465041451	574650	4145120	0.063264139	4.10413E-05	0.063305
7466041451	574660	4145120	0.066355855	3.95967E-05	0.066395
7460041451	574600	4145130	0.072065783	3.91454E-05	0.072105
7462041451	574620	4145130	0.116306115	4.82298E-05	0.116354
7463041451	574630	4145130	0.131365468	5.11227E-05	0.131417
7464041451	574640	4145130	0.148653085	5.55289E-05	0.148709
7465041451	574650	4145130	0.170703618	5.9609E-05	0.170763
7463041451	574630	4145140	0.196644329	6.55749E-05	0.19671
7464041451	574640	4145140	0.226373089	7.44917E-05	0.226448
7459041451	574590	4145150	0.264346427	9.35779E-05	0.26444
7460041451	574600	4145150	0.308261804	0.000132643	0.308394
7460041451	574600	4145160	0.357376464	0.00023199	0.357608
7461041451	574610	4145160	0.410947653	0.000739302	0.411687
7461041451	574610	4145170	0.465502992	0.000481367	0.465984
7457041450	574570	4145030	0.508489925	0.000193858	0.508684
7463041450	574630	4145080	0.518934914	0.000100818	0.519036
7461041450	574610	4145090	0.519946917	6.65064E-05	0.520013
7462041450	574620	4145090	0.506094541	4.81054E-05	0.506143
7463041450	574630	4145090	0.049300349	4.57509E-05	0.049346
7464041450	574640	4145090	0.056263675	5.18064E-05	0.056315
7460041451	574600	4145100	0.058185553	4.8683E-05	0.058234
7461041451	574610	4145100	0.063486965	4.89777E-05	0.063536
7462041451	574620	4145100	0.071573708	4.9852E-05	0.071624
7463041451	574630	4145100	0.079029109	5.08924E-05	0.07908
7464041451	574640	4145100	0.087580073	5.24629E-05	0.087633
7465041451	574650	4145100	0.097068766	5.53085E-05	0.097124
7459041451	574590	4145110	0.108219372	5.80413E-05	0.108277
7460041451	574600	4145110	0.121171158	6.22353E-05	0.121233
7461041451	574610	4145110	0.136323356	6.69563E-05	0.13639
7462041451	574620	4145110	0.154697253	7.11176E-05	0.154768

Max GLC for Chronic Calcs

Max GLC: 0.390862

XY	X	Y	2025	2026	2027	2034	2035
57463041451	574630	4145140	0.0023081	0.0218505	0		
57464041451	574640	4145140	0.0020863	0.019751	0		
57459041451	574590	4145150	0.0001175	0.0011128	0		
57460041451	574600	4145150	0.0001279	0.0012109	0		
57460041451	574600	4145160	0.0001401	0.0013267	0		
57461041451	574610	4145160	0.0005963	0.0056455	0		
57461041451	574610	4145170	0.0007193	0.0068107	0		
57457041450	574570	4145030	0.0008811	0.0083422	0		
57463041450	574630	4145080	0.0010839	0.0102631	0		
57461041450	574610	4145090	0.0013045	0.0123587	0		
57462041450	574620	4145090	0.0015098	0.0142989	0		
57463041450	574630	4145090	0.0016916	0.0160157	0		
57464041450	574640	4145090	0.0017567	0.0166316	0		
57460041451	574600	4145100	0.0017091	0.0161805	0		
57461041451	574610	4145100	0.0016165	0.0153031	0		
57462041451	574620	4145100	0.0001138	0.0010778	0		
57463041451	574630	4145100	0.0001236	0.0011702	0		
57464041451	574640	4145100	0.0001348	0.0012766	0		
57465041451	574650	4145100	0.0001462	0.0013843	0		
57459041451	574590	4145110	0.0004442	0.0042054	0		
57460041451	574600	4145110	0.0005225	0.0049475	0		
57461041451	574610	4145110	0.0006178	0.0058492	0		
57462041451	574620	4145110	0.0007381	0.0069892	0		
57463041451	574630	4145110	0.0008786	0.00832	0		
57464041451	574640	4145110	0.0010372	0.0098276	0		
57465041451	574650	4145110	0.0011795	0.0111719	0		
57466041451	574660	4145110	0.0013045	0.0123521	0		
57460041451	574600	4145120	0.0013419	0.0127041	0		
57461041451	574610	4145120	0.0013324	0.012614	0		
57462041451	574620	4145120	0.0012729	0.0120509	0		
57463041451	574630	4145120	0.0001091	0.0010332	0		
57464041451	574640	4145120	0.0001191	0.0011279	0		
57465041451	574650	4145120	0.0001288	0.0012196	0		
57466041451	574660	4145120	0.0001351	0.0012792	0		
57460041451	574600	4145130	0.0001467	0.0013892	0		
57462041451	574620	4145130	0.0002368	0.0022419	0		
57463041451	574630	4145130	0.0002674	0.0025321	0		
57464041451	574640	4145130	0.0003026	0.0028653	0		
57465041451	574650	4145130	0.0003475	0.0032903	0		
57463041451	574630	4145140	0.0004003	0.0037902	0		
57464041451	574640	4145140	0.0004608	0.0043632	0		
57459041451	574590	4145150	0.0005381	0.0050952	0		
57460041451	574600	4145150	0.0006275	0.005942	0		
57460041451	574600	4145160	0.0007275	0.0068897	0		
57461041451	574610	4145160	0.0008365	0.0079283	0		
57461041451	574610	4145170	0.0009476	0.0089764	0		
57457041450	574570	4145030	0.0010351	0.0098013	0		
57463041450	574630	4145080	0.0010564	0.0100014	0		
57461041450	574610	4145090	0.0010584	0.0100205	0		
57462041450	574620	4145090	0.0010302	0.0097533	0		
57463041450	574630	4145090	0.0001004	0.0009506	0		
57464041450	574640	4145090	0.0001145	0.0010849	0		
57460041451	574600	4145100	0.0001184	0.0011219	0		
57461041451	574610	4145100	0.0001292	0.001224	0		
57462041451	574620	4145100	0.0001457	0.0013799	0		
57463041451	574630	4145100	0.0001609	0.0015236	0		
57464041451	574640	4145100	0.0001783	0.0016884	0		
57465041451	574650	4145100	0.0001976	0.0018712	0		
57459041451	574590	4145110	0.0002203	0.0020862	0		
57460041451	574600	4145110	0.0002467	0.0023358	0		
57461041451	574610	4145110	0.0002775	0.0026278	0		
57462041451	574620	4145110	0.0003149	0.002982	0		

Garvey Reservoir Rehab - Unmitigated Facility Electrical System

Cancer Risk Summary & Maximum Annual GLC for Chronic Calculations

Cancer Risk Summary

Max Risk: 20.28296

XY	X	Y	Offroad Risk	Haul Risk	Total Risk
7463041451	574630	4145110	0.175940039	7.6729E-05	0.176017
7464041451	574640	4145110	0.199717477	8.51515E-05	0.199803
7465041451	574650	4145110	0.225583912	0.000102389	0.225686
7466041451	574660	4145110	0.262461687	0.000149792	0.262611
7460041451	574600	4145120	0.300295759	0.000295206	0.300591
7461041451	574610	4145120	0.341110134	0.001028314	0.342138
7462041451	574620	4145120	0.381061057	0.000433606	0.381495
7463041451	574630	4145120	0.413352321	0.000191041	0.413543
7464041451	574640	4145120	0.435031477	0.000111358	0.435143
7465041451	574650	4145120	0.423110262	6.61039E-05	0.423176
7466041451	574660	4145120	0.417873841	4.85744E-05	0.417922
7460041451	574600	4145130	0.046468596	5.89717E-05	0.046528
7462041451	574620	4145130	0.054044695	6.99544E-05	0.054115
7463041451	574630	4145130	0.058324819	7.26072E-05	0.058397
7464041451	574640	4145130	0.063236285	7.13619E-05	0.063308
7465041451	574650	4145130	0.068732671	7.22008E-05	0.068805
7463041451	574630	4145140	0.07507394	7.17187E-05	0.075146
7464041451	574640	4145140	0.082260092	7.29141E-05	0.082333
7459041451	574590	4145150	0.090578946	7.39615E-05	0.090653
7460041451	574600	4145150	0.100234758	7.79647E-05	0.100313
7460041451	574600	4145160	0.111598906	8.2118E-05	0.111681
7461041451	574610	4145160	0.124597115	8.5664E-05	0.124683
7461041451	574610	4145170	0.139730744	8.93203E-05	0.13982
7457041450	574570	4145030	0.157361885	9.44209E-05	0.157456
7463041450	574630	4145080	0.17790834	0.000103572	0.178012
7461041450	574610	4145090	0.197823452	0.000120949	0.197944
7462041450	574620	4145090	0.226103841	0.000168659	0.226272
7463041450	574630	4145090	0.256371098	0.000382477	0.256754
7464041450	574640	4145090	0.286833329	0.001050563	0.287884
7460041451	574600	4145100	0.316766346	0.000351609	0.317118
7461041451	574610	4145100	0.342159275	0.000178003	0.342337
7462041451	574620	4145100	0.359920399	0.00011119	0.360032
7463041451	574630	4145100	0.368137124	7.58813E-05	0.368213
7464041451	574640	4145100	0.366057411	5.50735E-05	0.366112
7465041451	574650	4145100	0	0	0
7459041451	574590	4145110	0	0	0
7460041451	574600	4145110	0	0	0
7461041451	574610	4145110	0	0	0
7462041451	574620	4145110	0	0	0
7463041451	574630	4145110	0	0	0
7464041451	574640	4145110	0	0	0
7465041451	574650	4145110	0	0	0
7466041451	574660	4145110	0	0	0
7460041451	574600	4145120	0	0	0
7461041451	574610	4145120	0	0	0
7462041451	574620	4145120	0	0	0
7463041451	574630	4145120	0	0	0
7464041451	574640	4145120	0	0	0
7465041451	574650	4145120	0	0	0
7466041451	574660	4145120	0	0	0
7460041451	574600	4145130	0	0	0
7462041451	574620	4145130	0	0	0
7463041451	574630	4145130	0	0	0
7464041451	574640	4145130	0	0	0
7465041451	574650	4145130	0	0	0
7463041451	574630	4145140	0	0	0
7464041451	574640	4145140	0	0	0
7459041451	574590	4145150	0	0	0
7460041451	574600	4145150	0	0	0
7460041451	574600	4145160	0	0	0
7461041451	574610	4145160	0	0	0
7461041451	574610	4145170	0	0	0

Max GLC for Chronic Calcs

Max GLC: 0.390862

XY	X	Y	2025	2026	2027	2034	2035
57463041451	574630	4145110	0.0003581	0.0033914	0		
57464041451	574640	4145110	0.0004065	0.0038497	0		
57465041451	574650	4145110	0.0004592	0.0043484	0		
57466041451	574660	4145110	0.0005343	0.0050596	0		
57460041451	574600	4145120	0.0006113	0.0057905	0		
57461041451	574610	4145120	0.0006944	0.006586	0		
57462041451	574620	4145120	0.0007757	0.0073486	0		
57463041451	574630	4145120	0.0008414	0.0079679	0		
57464041451	574640	4145120	0.0008856	0.0083847	0		
57465041451	574650	4145120	0.0008613	0.0081544	0		
57466041451	574660	4145120	0.0008506	0.0080533	0		
57460041451	574600	4145130	9.459E-05	0.0008962	0		
57462041451	574620	4145130	0.00011	0.0010423	0		
57463041451	574630	4145130	0.0001187	0.0011248	0		
57464041451	574640	4145130	0.0001287	0.0012195	0		
57465041451	574650	4145130	0.0001399	0.0013254	0		
57463041451	574630	4145140	0.0001528	0.0014476	0		
57464041451	574640	4145140	0.0001675	0.0015861	0		
57459041451	574590	4145150	0.0001844	0.0017464	0		
57460041451	574600	4145150	0.000204	0.0019325	0		
57460041451	574600	4145160	0.0002272	0.0021516	0		
57461041451	574610	4145160	0.0002536	0.0024021	0		
57461041451	574610	4145170	0.0002844	0.0026938	0		
57457041450	574570	4145030	0.0003203	0.0030336	0		
57463041450	574630	4145080	0.0003622	0.0034297	0		
57461041450	574610	4145090	0.0004027	0.0038136	0		
57462041450	574620	4145090	0.0004603	0.0043592	0		
57463041450	574630	4145090	0.0005219	0.0049451	0		
57464041450	574640	4145090	0.0005839	0.0055403	0		
57460041451	574600	4145100	0.0006448	0.0061086	0		
57461041451	574610	4145100	0.0006965	0.0065958	0		
57462041451	574620	4145100	0.0007327	0.0069372	0		
57463041451	574630	4145100	0.0007494	0.0070951	0		
57464041451	574640	4145100	0.0007452	0.0070548	0		
57465041451	574650	4145100	0	0	0		
57459041451	574590	4145110	0	0	0		
57460041451	574600	4145110	0	0	0		
57461041451	574610	4145110	0	0	0		
57462041451	574620	4145110	0	0	0		
57463041451	574630	4145110	0	0	0		
57464041451	574640	4145110	0	0	0		
57465041451	574650	4145110	0	0	0		
57466041451	574660	4145110	0	0	0		
57460041451	574600	4145120	0	0	0		
57461041451	574610	4145120	0	0	0		
57462041451	574620	4145120	0	0	0		
57463041451	574630	4145120	0	0	0		
57464041451	574640	4145120	0	0	0		
57465041451	574650	4145120	0	0	0		
57466041451	574660	4145120	0	0	0		
57460041451	574600	4145130	0	0	0		
57462041451	574620	4145130	0	0	0		
57463041451	574630	4145130	0	0	0		
57464041451	574640	4145130	0	0	0		
57465041451	574650	4145130	0	0	0		
57463041451	574630	4145140	0	0	0		
57464041451	574640	4145140	0	0	0		
57459041451	574590	4145150	0	0	0		
57460041451	574600	4145150	0	0	0		
57460041451	574600	4145160	0	0	0		
57461041451	574610	4145160	0	0	0		
57461041451	574610	4145170	0	0	0		

Garvey Reservoir Rehab - Unmitigated Facility Electrical System

Construction Modeling Assumptions

AERMOD Sources

Volume Sources		
Offroad Construction Exhaust		
Release Height	3.66	m
Emissions rate	1	g/s
Init Vert Dimension	3.4	m
Line Volume		
Onroad Hauling Exhaust		
Plume Height	7.315	m
Plume Width	20	m
Release Height	3.66	m
Emissions rate	1	g/s

Meteorology:

SCAQMD	Pico	Rivera	2010 - 2012, 2015 - 2016

SCAQMD Met Data

https://www.aqmd.gov/home/air-quality/meteorological-data/data-for-aermod

AERMOD Sources

Garvey Reservoir Rehab - Unmitigated Facility Electrical System

Health Risk Assessment Risk Factors

Residential Risk	Abbreviation	UOM	3rd Trimester	0<2	2<16	16<30
Daily Breathing Rate (95th %'ile)	DBR	L/kg-day	361	1090	572	261
Fraction Of Time At Home [a]	FAH	unitless	1	1	1	0.73
Exposure Frequency	EF	days/year	0.96	0.96	0.96	0.96
Age Sensitivity Factor	ASF	unitless	10	10	3	1
Inhalation Absorption Factor	A	unitless	1	1	1	1
Conversion Factor	CF_1	m^3/L	0.001	0.001	0.001	0.001
Conversion Factor	CF_2	$\mu g/m^3$	0.001	0.001	0.001	0.001
Cancer Potency Factor (diesel exhaust)	CPF	$mg/kg\text{-}day^{-1}$	1.1	1.1	1.1	1.1
Averaging Time (for residential exposure)	AT	years	70.00	70.00	70.00	70.00

[a] assume school or daycare will have cancer risk of >1 per million

Garvey Reservoir Rehab - Unmitigated Facility Electrical System

Health Risk Assessment Exposure Duration Assumptions for Offroad Equipment

Residential Receptors

			Start Date	*9/30/2025*	*12/30/2025*
			End Date	*12/29/2025*	*12/30/2027*
	9/30/2025	*1/31/2027*	*Days*	*90*	*730*
Phase	Start Date	End Date	Duration (days)	3rd Tri	0<2
Demolition - 2025			1	0	0
Demolition - 2026			1	0	0
Site Preparation - 2025	9/30/2025	12/20/2025	82	82	0
Site Preparation - 2026			1	0	0
Grading - 2025	1/1/2026	1/31/2026	31	0	31
Grading - 2026			1	0	0
Infrastructure - 2025	2/1/2026	7/31/2026	181	0	181
Infrastructure - 2026			1	0	0
Paving - 2025	11/1/2026	1/31/2027	92	0	92
Architectural Coating - 2026			1	0	0

			Intake Factor for Inhalation, IF (m^3/kg-day)			Risk Calculation Part 1, R1		
Phase	Year	Year	Equation	3rd Trimester	0<2	Equation	3rd Trimester	0<2
Demolition - 2025		1900		0	0		0	0
Demolition - 2026		1900	$\frac{DBR \cdot FAH \cdot EF \cdot ED \cdot ASF \cdot A \cdot CF_1}{AT}$	0	0		0	0
Site Preparation - 2025		2025		0.011109777	0		1.22208E-05	0
Site Preparation - 2026		1900		0	0	$IF \cdot CPF \cdot CF_2$	0	0
Grading - 2025		2026		0	0.012681554		0	1.39497E-05
Grading - 2026		1900		0	0		0	0
Infrastructure - 2025		2026		0	0.074043911		0	8.14483E-05
Infrastructure - 2026		1900		0	0		0	0
Paving - 2025		2026		0	0.037635579		0	4.13991E-05
Architectural Coating - 2026		1900		0	0		0	0

Exposure Durations

Garvey Reservoir Rehab - Unmitigated Facility Electrical System

Offroad DPM Emissions, Ground Level Concentrations and Health Risk Calculations

Residential Receptors

Phase	Year	Emissions (lbs/day)	Work Hours Per Day	Emissions (g/s)
Demolition - 2025	1900		10	0
Demolition - 2026	1900		10	0
Site Preparation - 2025	2025	0.150	10	0.001889958
Site Preparation - 2026	1900		10	0
Grading - 2025	2026	0.020	10	0.000251994
Grading - 2026	1900		10	0
Infrastructure - 2025	2026	0.340	10	0.004283906
Infrastructure - 2026	1900		10	0
Paving - 2025	2026	1.060	10	0.013355706
Architectural Coating - 2026	1900		10	0

		AERMOD Column Identifier:	*4*	*4*	*4*	*4*	*4*	*4*	*4*	*4*	*4*	*4*				
Garvey Reservoir Rehab - Unmitigated Facility Electrical System			Demolition - 2025	Demolition - 2026	Site Preparation - 202	Site Preparation - 202	Grading - 2025	Grading - 2026	Infrastructure - 202	Infrastructure - 202	Paving - 2025	Architectural Coating - 2	Child Risk			
Unique Identifier	X (UTM)	Y (UTM)	1900	1900	2025	1900	2026	1900	2026	1900	2026	1900	3rd Trimester	0<2	Total	per million
396166.283767377.2	396166.28	3767377	0	0	7.41431E-05	0	9.88574E-06	0	0.000168058	0	0.000523944	0	9.06084E-10	3.55168E-08	3.64228E-08	0.0364228
396266.283767377.2	396266.28	3767377	0	0	8.2062E-05	0	1.09416E-05	0	0.000186007	0	0.000579905	0	1.00286E-09	3.93102E-08	4.0313E-08	0.040313
396366.283767377.2	396366.28	3767377	0	0	9.38553E-05	0	1.2514E-05	0	0.000212739	0	0.000663244	0	1.14698E-09	4.49595E-08	4.61065E-08	0.0461065
396466.283767377.2	396466.28	3767377	0	0	0.000106235	0	1.41646E-05	0	0.000240798	0	0.000750724	0	1.29827E-09	5.08895E-08	5.21878E-08	0.0521878
396566.283767377.2	396566.28	3767377	0	0	0.000121487	0	1.61982E-05	0	0.000275369	0	0.000858505	0	1.48466E-09	5.81957E-08	5.96803E-08	0.0596803
396666.283767377.2	396666.28	3767377	0	0	0.000135075	0	1.801E-05	0	0.000306171	0	0.000954532	0	1.65072E-09	6.47051E-08	6.63559E-08	0.0663559
396766.283767377.2	396766.28	3767377	0	0	0.000147001	0	1.96001E-05	0	0.000333202	0	0.001038807	0	1.79646E-09	7.04179E-08	7.22143E-08	0.0722143
396866.283767377.2	396866.28	3767377	0	0	0.000159796	0	2.13061E-05	0	0.000362204	0	0.001129225	0	1.95283E-09	7.65471E-08	7.84999E-08	0.0784999
396966.283767377.2	396966.28	3767377	0	0	0.000175407	0	2.33876E-05	0	0.000397589	0	0.001239543	0	2.14361E-09	8.40252E-08	8.61688E-08	0.0861688
397066.283767377.2	397066.28	3767377	0	0	0.000185537	0	2.47383E-05	0	0.000420551	0	0.00131113	0	2.2674E-09	8.88779E-08	9.11453E-08	0.0911453
397166.283767377.2	397166.28	3767377	0	0	0.000188504	0	2.51339E-05	0	0.000427277	0	0.001332098	0	2.30367E-09	9.02993E-08	9.2603E-08	0.092603
397266.283767377.2	397266.28	3767377	0	0	0.000185726	0	2.47635E-05	0	0.000420979	0	0.001312465	0	2.26971E-09	8.89684E-08	9.12381E-08	0.0912381
397366.283767377.2	397366.28	3767377	0	0	0.00018567	0	2.47559E-05	0	0.000420851	0	0.001312065	0	2.26902E-09	8.89413E-08	9.12103E-08	0.0912103
397466.283767377.2	397466.28	3767377	0	0	0.000181719	0	2.42293E-05	0	0.000411898	0	0.001284151	0	2.22075E-09	8.70491E-08	8.92698E-08	0.0892698
397566.283767377.2	397566.28	3767377	0	0	0.000172137	0	2.29517E-05	0	0.000390178	0	0.001216438	0	2.10365E-09	8.2459E-08	8.45626E-08	0.0845626
397666.283767377.2	397666.28	3767377	0	0	0.000159928	0	2.13238E-05	0	0.000362504	0	0.00113016	0	1.95444E-09	7.66104E-08	7.85649E-08	0.0785649
397766.283767377.2	397766.28	3767377	0	0	0.000143202	0	1.90936E-05	0	0.000324592	0	0.001011962	0	1.75004E-09	6.85981E-08	7.03482E-08	0.0703482
397866.283767377.2	397866.28	3767377	0	0	0.000128649	0	1.71533E-05	0	0.000291605	0	0.000909123	0	1.57219E-09	6.1627E-08	6.31991E-08	0.0631991
396166.283767477.2	396166.28	3767477	0	0	7.82632E-05	0	1.04351E-05	0	0.000177397	0	0.00055306	0	9.56435E-10	3.74904E-08	3.84468E-08	0.0384468
396266.283767477.2	396266.28	3767477	0	0	8.63522E-05	0	1.15136E-05	0	0.000195732	0	0.000610222	0	1.05529E-09	4.13653E-08	4.24206E-08	0.0424206
396366.283767477.2	396366.28	3767477	0	0	0.000100413	0	1.33885E-05	0	0.000227604	0	0.000709589	0	1.22713E-09	4.81011E-08	4.93282E-08	0.0493282
396466.283767477.2	396466.28	3767477	0	0	0.000116006	0	1.54674E-05	0	0.000262946	0	0.000819773	0	1.41768E-09	5.55702E-08	5.69879E-08	0.0569879
396566.283767477.2	396566.28	3767477	0	0	0.000133866	0	1.78488E-05	0	0.000303429	0	0.000945985	0	1.63594E-09	6.41257E-08	6.57617E-08	0.0657617
396666.283767477.2	396666.28	3767477	0	0	0.000152841	0	2.03788E-05	0	0.000346439	0	0.001080076	0	1.86783E-09	7.32154E-08	7.50832E-08	0.0750832
396766.283767477.2	396766.28	3767477	0	0	0.000173063	0	2.30751E-05	0	0.000392277	0	0.001222982	0	2.11497E-09	8.29026E-08	8.50176E-08	0.0850176
396866.283767477.2	396866.28	3767477	0	0	0.000194722	0	2.5963E-05	0	0.000441371	0	0.001376038	0	2.37965E-09	9.32779E-08	9.56575E-08	0.0956575
396966.283767477.2	396966.28	3767477	0	0	0.000220426	0	2.93901E-05	0	0.000499632	0	0.001557676	0	2.69377E-09	1.05591E-07	1.08284E-07	0.1082844
397066.283767477.2	397066.28	3767477	0	0	0.000240233	0	3.2031E-05	0	0.000544527	0	0.001697644	0	2.93582E-09	1.15079E-07	1.18014E-07	0.1180145
397166.283767477.2	397166.28	3767477	0	0	0.000249361	0	3.32481E-05	0	0.000565218	0	0.001762152	0	3.04738E-09	1.19451E-07	1.22499E-07	0.1224988
397266.283767477.2	397266.28	3767477	0	0	0.000248435	0	3.31247E-05	0	0.000563119	0	0.001755607	0	3.03606E-09	1.19008E-07	1.22044E-07	0.1220439
397366.283767477.2	397366.28	3767477	0	0	0.000244787	0	3.26383E-05	0	0.000554851	0	0.001729831	0	2.99149E-09	1.17261E-07	1.20252E-07	0.120252
397466.283767477.2	397466.28	3767477	0	0	0.00023838	0	3.17841E-05	0	0.000540329	0	0.001684555	0	2.91319E-09	1.14191E-07	1.17105E-07	0.1171046
397566.283767477.2	397566.28	3767477	0	0	0.00022258	0	2.96774E-05	0	0.000504516	0	0.001572901	0	2.7201E-09	1.06623E-07	1.09343E-07	0.1093428
397666.283767477.2	397666.28	3767477	0	0	0.000201715	0	2.68954E-05	0	0.000457221	0	0.001425454	0	2.46511E-09	9.66277E-08	9.90928E-08	0.0990928
397766.283767477.2	397766.28	3767477	0	0	0.000178903	0	2.38538E-05	0	0.000405514	0	0.001264251	0	2.18634E-09	8.57001E-08	8.78865E-08	0.0878865
397866.283767477.2	397866.28	3767477	0	0	0.000156715	0	2.08954E-05	0	0.000355221	0	0.001107455	0	1.91518E-09	7.50714E-08	7.69865E-08	0.0769865
396166.283767577.2	396166.28	3767577	0	0	8.08335E-05	0	1.07778E-05	0	0.000183223	0	0.000571224	0	9.87847E-10	3.87217E-08	3.97095E-08	0.0397095
396266.283767577.2	396266.28	3767577	0	0	9.0907E-05	0	1.21209E-05	0	0.000206056	0	0.000642409	0	1.11095E-09	4.35472E-08	4.46581E-08	0.0446581
396366.283767577.2	396366.28	3767577	0	0	0.00010529	0	1.40386E-05	0	0.000238656	0	0.000744046	0	1.28672E-09	5.04369E-08	5.17236E-08	0.0517236
396466.283767577.2	396466.28	3767577	0	0	0.000123887	0	1.65182E-05	0	0.00028081	0	0.000875466	0	1.51399E-09	5.93455E-08	6.08595E-08	0.0608595
396566.283767577.2	396566.28	3767577	0	0	0.000147039	0	1.96052E-05	0	0.000333288	0	0.001039074	0	1.79692E-09	7.0436E-08	7.22329E-08	0.0722329

Garvey Reservoir Rehab - Unmitigated Facility Electrical System			Demolition - 2025	Demolition - 2026	ite Preparation - 202	te Preparation - 202	Grading - 2025	Grading - 2026	nfrastructure - 202	nfrastructure - 202	Paving - 2025	itectural Coating -	Child Risk			
Unique Identifier	X (UTM)	Y (UTM)	1900	1900	2025	1900	2026	1900	2026	1900	2026	1900	3rd Trimester	0<2	Total	per million
396666.283767577.2	396666.28	3767577	0	0	0.000174897	0	2.33196E-05	0	0.000396433	0	0.001235937	0	2.13737E-09	8.37808E-08	8.59182E-08	0.0859182
396766.283767577.2	396766.28	3767577	0	0	0.000200487	0	2.67316E-05	0	0.000454437	0	0.001416773	0	2.4501E-09	9.60392E-08	9.84893E-08	0.0984893
396866.283767577.2	396866.28	3767577	0	0	0.000239817	0	3.19756E-05	0	0.000543585	0	0.001694705	0	2.93074E-09	1.14879E-07	1.1781E-07	0.1178102
396966.283767577.2	396966.28	3767577	0	0	0.000280527	0	3.74035E-05	0	0.00063586	0	0.001982387	0	3.42825E-09	1.34381E-07	1.37809E-07	0.1378089
397066.283767577.2	397066.28	3767577	0	0	0.000318174	0	4.24233E-05	0	0.000721196	0	0.002248433	0	3.88833E-09	1.52415E-07	1.56303E-07	0.1563035
397166.283767577.2	397166.28	3767577	0	0	0.000344502	0	4.59335E-05	0	0.00078087	0	0.002434478	0	4.21007E-09	1.65027E-07	1.69237E-07	0.1692367
397266.283767577.2	397266.28	3767577	0	0	0.000350493	0	4.67324E-05	0	0.00079445	0	0.002476816	0	4.28329E-09	1.67897E-07	1.7218E-07	0.1721798
397366.283767577.2	397366.28	3767577	0	0	0.00034299	0	4.5732E-05	0	0.000777443	0	0.002423793	0	4.19159E-09	1.64302E-07	1.68494E-07	0.1684939
397466.283767577.2	397466.28	3767577	0	0	0.000330195	0	4.40259E-05	0	0.000748441	0	0.002333375	0	4.03523E-09	1.58173E-07	1.62208E-07	0.1622084
397566.283767577.2	397566.28	3767577	0	0	0.000300012	0	4.00016E-05	0	0.000680027	0	0.002120085	0	3.66637E-09	1.43715E-07	1.47381E-07	0.1473811
397666.283767577.2	397666.28	3767577	0	0	0.000263082	0	3.50776E-05	0	0.00059632	0	0.001859114	0	3.21506E-09	1.26024E-07	1.29239E-07	0.1292393
397766.283767577.2	397766.28	3767577	0	0	0.000225037	0	3.0005E-05	0	0.000510085	0	0.001590264	0	2.75013E-09	1.078E-07	1.1055E-07	0.1105498
397866.283767577.2	397866.28	3767577	0	0	0.000190413	0	2.53884E-05	0	0.000431603	0	0.001345587	0	2.32699E-09	9.12137E-08	9.35407E-08	0.0935407
396166.283767677.2	396166.28	3767677	0	0	8.38953E-05	0	1.1186E-05	0	0.000190163	0	0.00059286	0	1.02526E-09	4.01883E-08	4.12136E-08	0.0412136
396266.283767677.2	396266.28	3767677	0	0	9.51594E-05	0	1.26879E-05	0	0.000215695	0	0.00067246	0	1.16292E-09	4.55842E-08	4.67471E-08	0.0467471
396366.283767677.2	396366.28	3767677	0	0	0.000111356	0	1.48475E-05	0	0.000252408	0	0.000786918	0	1.36086E-09	5.3343E-08	5.47039E-08	0.0547039
396466.283767677.2	396466.28	3767677	0	0	0.000132807	0	1.77076E-05	0	0.00030103	0	0.000938505	0	1.62301E-09	6.36187E-08	6.52417E-08	0.0652417
396566.283767677.2	396566.28	3767677	0	0	0.00015921	0	2.1228E-05	0	0.000360876	0	0.001125085	0	1.94567E-09	7.62664E-08	7.82121E-08	0.0782121
396666.283767677.2	396666.28	3767677	0	0	0.000188769	0	2.51692E-05	0	0.000427876	0	0.001333968	0	2.3069E-09	9.0426E-08	9.27329E-08	0.0927329
396766.283767677.2	396766.28	3767677	0	0	0.000234336	0	3.12448E-05	0	0.000531161	0	0.001655974	0	2.86376E-09	1.12254E-07	1.15118E-07	0.1151177
396866.283767677.2	396866.28	3767677	0	0	0.00029782	0	3.97093E-05	0	0.000675058	0	0.002104592	0	3.63958E-09	1.42665E-07	1.46304E-07	0.1463041
396966.283767677.2	396966.28	3767677	0	0	0.000372794	0	4.97059E-05	0	0.000845	0	0.002634413	0	4.55583E-09	1.7858E-07	1.83135E-07	0.1831355
397066.283767677.2	397066.28	3767677	0	0	0.000444065	0	5.92086E-05	0	0.001006546	0	0.003138057	0	5.4268E-09	2.1272E-07	2.18147E-07	0.2181471
397166.283767677.2	397166.28	3767677	0	0	0.000504392	0	6.72523E-05	0	0.001143289	0	0.003564371	0	6.16405E-09	2.41619E-07	2.47783E-07	0.247783
397266.283767677.2	397266.28	3767677	0	0	0.000539848	0	7.19797E-05	0	0.001223655	0	0.003814924	0	6.59735E-09	2.58603E-07	2.65201E-07	0.2652006
397366.283767677.2	397366.28	3767677	0	0	0.000525238	0	7.00318E-05	0	0.00119054	0	0.003711684	0	6.41881E-09	2.51605E-07	2.58024E-07	0.2580237
397466.283767677.2	397466.28	3767677	0	0	0.000491843	0	6.5579E-05	0	0.001114844	0	0.003475689	0	6.01069E-09	2.35607E-07	2.41618E-07	0.2416181
397566.283767677.2	397566.28	3767677	0	0	0.000426979	0	5.69306E-05	0	0.00096782	0	0.003017321	0	5.21801E-09	2.04536E-07	2.09754E-07	0.209754
397666.283767677.2	397666.28	3767677	0	0	0.000354197	0	4.72263E-05	0	0.000802847	0	0.002502993	0	4.32856E-09	1.69671E-07	1.74E-07	0.1739996
397766.283767677.2	397766.28	3767677	0	0	0.000287406	0	3.83208E-05	0	0.000651454	0	0.002031002	0	3.51232E-09	1.37676E-07	1.41188E-07	0.1411884
397866.283767677.2	397866.28	3767677	0	0	0.000231841	0	3.09122E-05	0	0.000525507	0	0.001638344	0	2.83327E-09	1.11059E-07	1.13892E-07	0.1138922
396166.283767777.2	396166.28	3767777	0	0	8.59553E-05	0	1.14607E-05	0	0.000194832	0	0.000607417	0	1.05044E-09	4.11752E-08	4.22256E-08	0.0422256
396266.283767777.2	396266.28	3767777	0	0	9.96197E-05	0	1.32826E-05	0	0.000225805	0	0.000703979	0	1.21743E-09	4.77208E-08	4.89383E-08	0.0489383
396366.283767777.2	396366.28	3767777	0	0	0.000116421	0	1.55229E-05	0	0.000263889	0	0.000822711	0	1.42276E-09	5.57694E-08	5.71921E-08	0.0571921
396466.283767777.2	396466.28	3767777	0	0	0.00013912	0	1.85493E-05	0	0.000315338	0	0.000983113	0	1.70015E-09	6.66426E-08	6.83427E-08	0.0683427
396566.283767777.2	396566.28	3767777	0	0	0.00016711	0	2.22813E-05	0	0.000378783	0	0.001180911	0	2.04221E-09	8.00508E-08	8.2093E-08	0.082093
396666.283767777.2	396666.28	3767777	0	0	0.000207121	0	2.76161E-05	0	0.000469473	0	0.001463652	0	2.53117E-09	9.9217E-08	1.01748E-07	0.1017481
396766.283767777.2	396766.28	3767777	0	0	0.000270283	0	3.60377E-05	0	0.000612641	0	0.001909999	0	3.30306E-09	1.29474E-07	1.32777E-07	0.1327767
396866.283767777.2	396866.28	3767777	0	0	0.000360491	0	4.80654E-05	0	0.000817112	0	0.002547467	0	4.40547E-09	1.72686E-07	1.77091E-07	0.1770913
396966.283767777.2	396966.28	3767777	0	0	0.000483716	0	6.44955E-05	0	0.001096423	0	0.003418259	0	5.91137E-09	2.31714E-07	2.37626E-07	0.2376258
397066.283767777.2	397066.28	3767777	0	0	0.000639146	0	8.52195E-05	0	0.001448731	0	0.004516633	0	7.81085E-09	3.0617E-07	3.13981E-07	0.313981
397166.283767777.2	397166.28	3767777	0	0	0.000798829	0	0.00010651	0	0.001810678	0	0.005645056	0	9.76229E-09	3.82663E-07	3.92425E-07	0.3924252
397266.283767777.2	397266.28	3767777	0	0	0.000917367	0	0.000122316	0	0.002079365	0	0.006482726	0	1.12109E-08	4.39446E-07	4.50657E-07	0.4506572
397366.283767777.2	397366.28	3767777	0	0	0.000913001	0	0.000121733	0	0.002069469	0	0.006451874	0	1.11576E-08	4.37355E-07	4.48512E-07	0.4485125
397466.283767777.2	397466.28	3767777	0	0	0.000790588	0	0.000105412	0	0.001792001	0	0.005586825	0	9.66159E-09	3.78716E-07	3.88377E-07	0.3883772
397566.283767777.2	397566.28	3767777	0	0	0.000634194	0	8.45593E-05	0	0.001437507	0	0.004481641	0	7.75033E-09	3.03798E-07	3.11548E-07	0.3115485
397666.283767777.2	397666.28	3767777	0	0	0.000492448	0	6.56597E-05	0	0.001116214	0	0.003479963	0	6.01808E-09	2.35897E-07	2.41915E-07	0.2419152
397766.283767777.2	397766.28	3767777	0	0	0.000370772	0	4.94363E-05	0	0.000840417	0	0.002620122	0	4.53111E-09	1.77611E-07	1.82142E-07	0.182142
397866.283767777.2	397866.28	3767777	0	0	0.000283286	0	3.77714E-05	0	0.000642115	0	0.002001887	0	3.46197E-09	1.35702E-07	1.39164E-07	0.1391644
396166.283767877.2	396166.28	3767877	0	0	8.72594E-05	0	1.16346E-05	0	0.000197788	0	0.000616633	0	1.06638E-09	4.17999E-08	4.28662E-08	0.0428662
396266.283767877.2	396266.28	3767877	0	0	0.000101642	0	1.35523E-05	0	0.000230388	0	0.00071827	0	1.24214E-09	4.86895E-08	4.99317E-08	0.0499317
396366.283767877.2	396366.28	3767877	0	0	0.000119993	0	1.59991E-05	0	0.000271985	0	0.000847954	0	1.46641E-09	5.74805E-08	5.89469E-08	0.0589469
396466.283767877.2	396466.28	3767877	0	0	0.000143505	0	1.91339E-05	0	0.000325277	0	0.001014099	0	1.75373E-09	6.8743E-08	7.04967E-08	0.0704967
396566.283767877.2	396566.28	3767877	0	0	0.000174972	0	2.33296E-05	0	0.000396604	0	0.001236471	0	2.13829E-09	8.3817E-08	8.59553E-08	0.0859553
397466.283767877.2	397466.28	3767877	0	0	0.001555398	0	0.000207386	0	0.003525569	0	0.010991479	0	1.90081E-08	7.45082E-07	7.6409E-07	0.7640904
397566.283767877.2	397566.28	3767877	0	0	0.001001092	0	0.000133479	0	0.002269142	0	0.007074384	0	1.22341E-08	4.79553E-07	4.91787E-07	0.4917872
397666.283767877.2	397666.28	3767877	0	0	0.000613896	0	8.18528E-05	0	0.001391498	0	0.0043382	0	7.50228E-09	2.94075E-07	3.01577E-07	0.301577
397766.283767877.2	397766.28	3767877	0	0	0.000426356	0	5.68474E-05	0	0.000966406	0	0.003012914	0	5.21039E-09	2.04237E-07	2.09448E-07	0.2094476
397866.283767877.2	397866.28	3767877	0	0	0.00034023	0	4.5364E-05	0	0.000771189	0	0.002404294	0	4.15787E-09	1.62981E-07	1.67138E-07	0.1671384
396166.283767977.2	396166.28	3767977	0	0	8.73539E-05	0	1.16472E-05	0	0.000198002	0	0.000617301	0	1.06753E-09	4.18451E-08	4.29127E-08	0.0429127
396266.283767977.2	396266.28	3767977	0	0	0.000102285	0	1.36379E-05	0	0.000231845	0	0.000722811	0	1.24999E-09	4.89974E-08	5.02474E-08	0.0502474
396366.283767977.2	396366.28	3767977	0	0	0.000121222	0	1.61629E-05	0	0.00027477	0	0.000856635	0	1.48142E-09	5.80689E-08	5.95504E-08	0.0595504
396466.283767977.2	396466.28	3767977	0	0	0.0001453	0	1.93733E-05	0	0.000329347	0	0.001026787	0	1.77568E-09	6.96031E-08	7.13787E-08	0.0713787
397466.283767977.2	397466.28	3767977	0	0	0.003021495	0	0.000402866	0	0.006848723	0	0.0213519	0	3.6925E-08	1.44739E-06	1.48431E-06	1.4843119
397566.283767977.2	397566.28	3767977	0	0	0.001444382	0	0.000192584	0	0.003273932	0	0.010206964	0	1.76514E-08	6.91902E-07	7.09554E-07	0.7095536
397666.283767977.2	397666.28	3767977	0	0	0.000795313	0	0.000106042	0	0.00180271	0	0.005620214	0	9.71933E-09	3.80979E-07	3.90698E-07	0.3906983
397766.283767977.2	397766.28	3767977	0	0	0.000593012	0	7.90683E-05	0	0.001344161	0	0.00419062	0	7.24706E-09	2.84071E-07	2.91318E-07	0.2913177
397866.283767977.2	397866.28	3767977	0	0	0.000392469	0	5.23292E-05	0	0.000889596	0	0.002773446	0	4.79626E-09	1.88004E-07	1.92801E-07	0.1928006
396166.283768077.2	396166.28	3768077	0	0	8.8091E-05	0	1.17455E-05	0	0.000199673	0	0.000622509	0	1.07654E-09	4.21982E-08	4.32748E-08	0.0432748

Garvey Reservoir Rehab - Unmitigated Facility Electrical System			Demolition - 2025	Demolition - 2026	ite Preparation - 202	te Preparation - 202	Grading - 2025	Grading - 2026	nfrastructure - 202	nfrastructure - 202	Paving - 2025	itectural Coating -	Child Risk			
Unique Identifier	X (UTM)	Y (UTM)	1900	1900	2025	1900	2026	1900	2026	1900	2026	1900	3rd Trimester	0<2	Total	per million
396266.283768077.2	396266.28	3768077	0	0	0.000101925	0	1.35901E-05	0	0.000231031	0	0.000720273	0	1.24561E-09	4.88254E-08	5.0071E-08	0.050071
396366.283768077.2	396366.28	3768077	0	0	0.000120863	0	1.6115E-05	0	0.000273956	0	0.000854097	0	1.47704E-09	5.78969E-08	5.9374E-08	0.059374
396466.283768077.2	396466.28	3768077	0	0	0.000146604	0	1.95472E-05	0	0.000332303	0	0.001036002	0	1.79161E-09	7.02277E-08	7.20194E-08	0.0720194
397466.283768077.2	397466.28	3768077	0	0	0.008913403	0	0.001188454	0	0.020203713	0	0.062988045	0	1.08929E-07	4.26979E-06	4.37872E-06	4.3787159
397566.283768077.2	397566.28	3768077	0	0	0.002843972	0	0.000379196	0	0.006446335	0	0.020097399	0	3.47555E-08	1.36235E-06	1.3971E-06	1.3971032
397666.283768077.2	397666.28	3768077	0	0	0.001275419	0	0.000170056	0	0.002890951	0	0.009012964	0	1.55866E-08	6.10964E-07	6.26551E-07	0.6265508
397766.283768077.2	397766.28	3768077	0	0	0.000716616	0	9.55487E-05	0	0.001624328	0	0.005064083	0	8.75758E-09	3.4328E-07	3.52038E-07	0.3520379
397866.283768077.2	397866.28	3768077	0	0	0.00045444	0	6.05921E-05	0	0.001030065	0	0.003211379	0	5.55361E-09	2.17691E-07	2.23244E-07	0.2232442
396166.283768177.2	396166.28	3768177	0	0	8.73728E-05	0	1.16497E-05	0	0.000198045	0	0.000617434	0	1.06776E-09	4.18542E-08	4.29219E-08	0.0429219
396266.283768177.2	396266.28	3768177	0	0	0.000101434	0	1.35245E-05	0	0.000229917	0	0.000716801	0	1.2396E-09	4.859E-08	4.98296E-08	0.0498296
396366.283768177.2	396366.28	3768177	0	0	0.000120126	0	1.60168E-05	0	0.000272285	0	0.000848889	0	1.46803E-09	5.75438E-08	5.90119E-08	0.0590119
396466.283768177.2	396466.28	3768177	0	0	0.00014479	0	1.93053E-05	0	0.00032819	0	0.001023181	0	1.76944E-09	6.93586E-08	7.11281E-08	0.0711281
397466.283768177.2	397466.28	3768177	0	0	0.013614088	0	0.001815212	0	0.0308586	0	0.096206222	0	1.66374E-07	6.52156E-06	6.68793E-06	6.6879312
397566.283768177.2	397566.28	3768177	0	0	0.003692733	0	0.000492364	0	0.008370195	0	0.026095312	0	4.5128E-08	1.76893E-06	1.81406E-06	1.8140579
397666.283768177.2	397666.28	3768177	0	0	0.001553111	0	0.000207081	0	0.003520385	0	0.010975318	0	1.89802E-08	7.43987E-07	7.62967E-07	0.762967
397766.283768177.2	397766.28	3768177	0	0	0.00084948	0	0.000113264	0	0.001925487	0	0.006002989	0	1.03813E-08	4.06926E-07	4.17307E-07	0.4173075
397866.283768177.2	397866.28	3768177	0	0	0.000511612	0	6.82149E-05	0	0.001159653	0	0.003615389	0	6.25228E-09	2.45077E-07	2.5133E-07	0.2513296
396166.283768277.2	396166.28	3768277	0	0	8.24022E-05	0	1.0987E-05	0	0.000186778	0	0.000582309	0	1.00702E-09	3.94731E-08	4.04801E-08	0.0404801
396266.283768277.2	396266.28	3768277	0	0	9.90905E-05	0	1.32121E-05	0	0.000224605	0	0.00070024	0	1.21096E-09	4.74673E-08	4.86783E-08	0.0486783
396366.283768277.2	396366.28	3768277	0	0	0.000116988	0	1.55985E-05	0	0.000265174	0	0.000826718	0	1.42969E-09	5.6041E-08	5.74707E-08	0.0574707
396466.283768277.2	396466.28	3768277	0	0	0.000140594	0	1.87459E-05	0	0.00031868	0	0.000993531	0	1.71816E-09	6.73487E-08	6.90669E-08	0.0690669
397366.283768277.2	397366.28	3768277	0	0	0.009086863	0	0.001211582	0	0.020596889	0	0.064213832	0	1.11048E-07	4.35288E-06	4.46393E-06	4.4639284
397466.283768277.2	397466.28	3768277	0	0	0.006911294	0	0.000921506	0	0.0156656	0	0.048839812	0	8.44612E-08	3.31072E-06	3.39518E-06	3.3951785
397566.283768277.2	397566.28	3768277	0	0	0.003391568	0	0.000452209	0	0.007687554	0	0.023967081	0	4.14475E-08	1.62466E-06	1.66611E-06	1.6661104
397666.283768277.2	397666.28	3768277	0	0	0.001638291	0	0.000218439	0	0.003713461	0	0.01157726	0	2.00212E-08	7.84791E-07	8.04812E-07	0.8048119
397766.283768277.2	397766.28	3768277	0	0	0.000913436	0	0.000121791	0	0.002070454	0	0.006454946	0	1.11629E-08	4.37563E-07	4.48726E-07	0.448726
397866.283768277.2	397866.28	3768277	0	0	0.000581559	0	7.75412E-05	0	0.001318201	0	0.004109684	0	7.10709E-09	2.78584E-07	2.85691E-07	0.2856913
396166.283768377.2	396166.28	3768377	0	0	7.66E-05	0	1.02133E-05	0	0.000173627	0	0.000541307	0	9.3611E-10	3.66937E-08	3.76298E-08	0.0376298
396266.283768377.2	396266.28	3768377	0	0	9.61422E-05	0	1.2819E-05	0	0.000217922	0	0.000679405	0	1.17493E-09	4.6055E-08	4.72299E-08	0.0472299
396366.283768377.2	396366.28	3768377	0	0	0.000112717	0	1.50289E-05	0	0.000255492	0	0.000796534	0	1.37749E-09	5.39949E-08	5.53724E-08	0.0553724
396466.283768377.2	396466.28	3768377	0	0	0.000134584	0	1.79445E-05	0	0.000305057	0	0.00095106	0	1.64472E-09	6.44697E-08	6.61145E-08	0.0661145
397266.283768377.2	397266.28	3768377	0	0	0.002315104	0	0.000308681	0	0.00524757	0	0.016360072	0	2.82923E-08	1.109E-06	1.1373E-06	1.1372968
397366.283768377.2	397366.28	3768377	0	0	0.003457452	0	0.000460994	0	0.007836891	0	0.024432661	0	4.22527E-08	1.65622E-06	1.69848E-06	1.6984759
397466.283768377.2	397466.28	3768377	0	0	0.003417536	0	0.000455671	0	0.007746415	0	0.024150588	0	4.17649E-08	1.6371E-06	1.67887E-06	1.6788672
397566.283768377.2	397566.28	3768377	0	0	0.002413571	0	0.00032181	0	0.005470762	0	0.017055904	0	2.94957E-08	1.15617E-06	1.18567E-06	1.1856687
397666.283768377.2	397666.28	3768377	0	0	0.001506448	0	0.00020086	0	0.003414615	0	0.010645566	0	1.84099E-08	7.21634E-07	7.40044E-07	0.7400437
397766.283768377.2	397766.28	3768377	0	0	0.00093723	0	0.000124964	0	0.002124389	0	0.006623094	0	1.14537E-08	4.48961E-07	4.60415E-07	0.4604151
397866.283768377.2	397866.28	3768377	0	0	0.000624404	0	8.32539E-05	0	0.001415317	0	0.004412458	0	7.63069E-09	2.99108E-07	3.06739E-07	0.3067392
396166.283768477.2	396166.28	3768477	0	0	7.36517E-05	0	9.82022E-06	0	0.000166944	0	0.000520472	0	9.00079E-10	3.52814E-08	3.61814E-08	0.0361814
396266.283768477.2	396266.28	3768477	0	0	9.14929E-05	0	1.21991E-05	0	0.000207384	0	0.00064655	0	1.11811E-09	4.38278E-08	4.49459E-08	0.0449459
396366.283768477.2	396366.28	3768477	0	0	0.000102681	0	1.36909E-05	0	0.000232745	0	0.000725615	0	1.25484E-09	4.91875E-08	5.04423E-08	0.0504423
396466.283768477.2	396466.28	3768477	0	0	0.00012693	0	1.69239E-05	0	0.000287707	0	0.000896969	0	1.55118E-09	6.08031E-08	6.23543E-08	0.0623543
397166.283768477.2	397166.28	3768477	0	0	0.000886523	0	0.000118203	0	0.002009452	0	0.006264761	0	1.0834E-08	4.24671E-07	4.35505E-07	0.435505
397266.283768477.2	397266.28	3768477	0	0	0.001339224	0	0.000178563	0	0.003035575	0	0.009463853	0	1.63663E-08	6.41529E-07	6.57895E-07	0.657895
397366.283768477.2	397366.28	3768477	0	0	0.001780397	0	0.000237386	0	0.004035568	0	0.012581475	0	2.17578E-08	8.52864E-07	8.74622E-07	0.8746216
397466.283768477.2	397466.28	3768477	0	0	0.00184613	0	0.000246151	0	0.004184562	0	0.013045987	0	2.25611E-08	8.84352E-07	9.06913E-07	0.9069129
397566.283768477.2	397566.28	3768477	0	0	0.001583067	0	0.000211076	0	0.003588285	0	0.011187006	0	1.93463E-08	7.58337E-07	7.77683E-07	0.7776828
397666.283768477.2	397666.28	3768477	0	0	0.001161115	0	0.000154815	0	0.00263186	0	0.008205211	0	1.41897E-08	5.56209E-07	5.70399E-07	0.5703985
397766.283768477.2	397766.28	3768477	0	0	0.000834473	0	0.000111263	0	0.001891473	0	0.005896945	0	1.01979E-08	3.99738E-07	4.09936E-07	0.4099356
397866.283768477.2	397866.28	3768477	0	0	0.000591425	0	7.88566E-05	0	0.001340563	0	0.004179401	0	7.22766E-09	2.8331E-07	2.90538E-07	0.2905378
396166.283768577.2	396166.28	3768577	0	0	7.6978E-05	0	1.02637E-05	0	0.000174483	0	0.000543978	0	9.40729E-10	3.68748E-08	3.78155E-08	0.0378155
396266.283768577.2	396266.28	3768577	0	0	7.93216E-05	0	1.05762E-05	0	0.000179796	0	0.000560539	0	9.69369E-10	3.79974E-08	3.89668E-08	0.0389668
396366.283768577.2	396366.28	3768577	0	0	9.13039E-05	0	1.21739E-05	0	0.000206955	0	0.000645214	0	1.1158E-09	4.37373E-08	4.48531E-08	0.0448531
396466.283768577.2	396466.28	3768577	0	0	0.000118444	0	1.57925E-05	0	0.000268472	0	0.000837002	0	1.44747E-09	5.67381E-08	5.81856E-08	0.0581856
396566.283768577.2	396566.28	3768577	0	0	0.000138553	0	1.84737E-05	0	0.000314053	0	0.000979107	0	1.69322E-09	6.6371E-08	6.80642E-08	0.0680642
396866.283768577.2	396866.28	3768577	0	0	0.000266465	0	3.55287E-05	0	0.000603988	0	0.001883021	0	3.25641E-09	1.27645E-07	1.30901E-07	0.1309012
396966.283768577.2	396966.28	3768577	0	0	0.000347015	0	4.62687E-05	0	0.000786568	0	0.002452241	0	4.24079E-09	1.66231E-07	1.70472E-07	0.1704715
397066.283768577.2	397066.28	3768577	0	0	0.000461849	0	6.15799E-05	0	0.001046858	0	0.003263734	0	5.64414E-09	2.2124E-07	2.26884E-07	0.2268837
397166.283768577.2	397166.28	3768577	0	0	0.0006341	0	8.45467E-05	0	0.001437293	0	0.004480973	0	7.74918E-09	3.03753E-07	3.11502E-07	0.3115021
397266.283768577.2	397266.28	3768577	0	0	0.000856964	0	0.000114262	0	0.001942451	0	0.006055878	0	1.04727E-08	4.10511E-07	4.20984E-07	0.4209841
397366.283768577.2	397366.28	3768577	0	0	0.001075745	0	0.000143433	0	0.002438356	0	0.007601934	0	1.31464E-08	5.15314E-07	5.28461E-07	0.5284607
397466.283768577.2	397466.28	3768577	0	0	0.001116474	0	0.000148863	0	0.002530674	0	0.007889749	0	1.36442E-08	5.34825E-07	5.48469E-07	0.5484687
397566.283768577.2	397566.28	3768577	0	0	0.001069773	0	0.000142636	0	0.002424819	0	0.00755973	0	1.30734E-08	5.12453E-07	5.25527E-07	0.5255269
397666.283768577.2	397666.28	3768577	0	0	0.000882667	0	0.000117689	0	0.002000712	0	0.006237515	0	1.07869E-08	4.22824E-07	4.33611E-07	0.433611
397766.283768577.2	397766.28	3768577	0	0	0.000679346	0	9.05794E-05	0	0.00153985	0	0.004800708	0	8.30211E-09	3.25427E-07	3.33729E-07	0.333729
397866.283768577.2	397866.28	3768577	0	0	0.000519568	0	6.92758E-05	0	0.001177688	0	0.003671617	0	6.34952E-09	2.48889E-07	2.55238E-07	0.2552384
396166.283768677.2	396166.28	3768677	0	0	7.32359E-05	0	9.76478E-06	0	0.000166001	0	0.000517534	0	8.94998E-10	3.50822E-08	3.59772E-08	0.0359772
396266.283768677.2	396266.28	3768677	0	0	8.30637E-05	0	1.10752E-05	0	0.000188278	0	0.000586983	0	1.0151E-09	3.979E-08	4.08051E-08	0.0408051
396366.283768677.2	396366.28	3768677	0	0	8.6957E-05	0	1.15943E-05	0	0.000197102	0	0.000614496	0	1.06268E-09	4.1655E-08	4.27177E-08	0.0427177

Garvey Reservoir Rehab - Unmitigated Facility Electrical System			Demolition - 2025	Demolition - 2026	ite Preparation - 202	te Preparation - 202	Grading - 2025	Grading - 2026	nfrastructure - 202	nfrastructure - 202	Paving - 2025	itectural Coating -	Child Risk			
Unique Identifier	X (UTM)	Y (UTM)	1900	1900	2025	1900	2026	1900	2026	1900	2026	1900	3rd Trimester	0<2	Total	per million
396466.283768677.2	396466.28	3768677	0	0	0.000109636	0	1.46182E-05	0	0.000248509	0	0.000774764	0	1.33984E-09	5.25192E-08	5.3859E-08	0.053859
396566.283768677.2	396566.28	3768677	0	0	0.000128309	0	1.71079E-05	0	0.000290834	0	0.000906719	0	1.56804E-09	6.1464E-08	6.3032E-08	0.063032
396666.283768677.2	396666.28	3768677	0	0	0.000152444	0	2.03259E-05	0	0.00034554	0	0.001077271	0	1.86298E-09	7.30253E-08	7.48883E-08	0.0748883
396766.283768677.2	396766.28	3768677	0	0	0.000183987	0	2.45317E-05	0	0.000417038	0	0.001300178	0	2.24847E-09	8.81355E-08	9.0384E-08	0.090384
396866.283768677.2	396866.28	3768677	0	0	0.000226852	0	3.02469E-05	0	0.000514197	0	0.001603085	0	2.7723E-09	1.08669E-07	1.11441E-07	0.1114411
396966.283768677.2	396966.28	3768677	0	0	0.00028493	0	3.79907E-05	0	0.000645842	0	0.002013506	0	3.48206E-09	1.3649E-07	1.39972E-07	0.1399721
397066.283768677.2	397066.28	3768677	0	0	0.000364044	0	4.85392E-05	0	0.000825166	0	0.002572576	0	4.44889E-09	1.74388E-07	1.78837E-07	0.1788368
397166.283768677.2	397166.28	3768677	0	0	0.00046561	0	6.20814E-05	0	0.001055383	0	0.003290312	0	5.69011E-09	2.23041E-07	2.28731E-07	0.2287313
397366.283768677.2	397366.28	3768677	0	0	0.000718316	0	9.57755E-05	0	0.001628184	0	0.005076103	0	8.77837E-09	3.44095E-07	3.52874E-07	0.3528735
397466.283768677.2	397466.28	3768677	0	0	0.000780458	0	0.000104061	0	0.001769039	0	0.005515239	0	9.53779E-09	3.73863E-07	3.83401E-07	0.3834007
397566.283768677.2	397566.28	3768677	0	0	0.000755983	0	0.000100798	0	0.001713562	0	0.005342282	0	9.23869E-09	3.62139E-07	3.71377E-07	0.3713774
397666.283768677.2	397666.28	3768677	0	0	0.000667495	0	8.89994E-05	0	0.00151299	0	0.004716968	0	8.1573E-09	3.1975E-07	3.27908E-07	0.3279077
397766.283768677.2	397766.28	3768677	0	0	0.000550828	0	7.34438E-05	0	0.001248544	0	0.00389252	0	6.73154E-09	2.63863E-07	2.70595E-07	0.2705949
397866.283768677.2	397866.28	3768677	0	0	0.000444934	0	5.93245E-05	0	0.001008517	0	0.0031442	0	5.43743E-09	2.13137E-07	2.18574E-07	0.2185742
396166.283768777.2	396166.28	3768777	0	0	6.97206E-05	0	9.29608E-06	0	0.000158033	0	0.000492692	0	8.52038E-10	3.33982E-08	3.42503E-08	0.0342503
396266.283768777.2	396266.28	3768777	0	0	7.81498E-05	0	1.042E-05	0	0.000177139	0	0.000552258	0	9.55049E-10	3.74361E-08	3.83911E-08	0.0383911
396366.283768777.2	396366.28	3768777	0	0	8.36307E-05	0	1.11508E-05	0	0.000189563	0	0.00059099	0	1.02203E-09	4.00616E-08	4.10836E-08	0.0410836
396466.283768777.2	396466.28	3768777	0	0	0.000101226	0	1.34968E-05	0	0.000229446	0	0.000715332	0	1.23706E-09	4.84904E-08	4.97274E-08	0.0497274
396566.283768777.2	396566.28	3768777	0	0	0.000116535	0	1.5538E-05	0	0.000264146	0	0.000823513	0	1.42414E-09	5.58237E-08	5.72478E-08	0.0572478
396666.283768777.2	396666.28	3768777	0	0	0.000136209	0	1.81612E-05	0	0.000308741	0	0.000962546	0	1.66458E-09	6.52483E-08	6.69129E-08	0.0669129
396766.283768777.2	396766.28	3768777	0	0	0.000161743	0	2.15657E-05	0	0.000366617	0	0.001142981	0	1.97662E-09	7.74796E-08	7.94562E-08	0.0794562
396866.283768777.2	396866.28	3768777	0	0	0.000194874	0	2.59831E-05	0	0.000441714	0	0.001377107	0	2.3815E-09	9.33503E-08	9.57318E-08	0.0957318
396966.283768777.2	396966.28	3768777	0	0	0.00023719	0	3.16253E-05	0	0.00053763	0	0.001676141	0	2.89864E-09	1.13621E-07	1.1652E-07	0.1165197
397066.283768777.2	397066.28	3768777	0	0	0.000291072	0	3.88097E-05	0	0.000659764	0	0.002056912	0	3.55713E-09	1.39432E-07	1.4299E-07	0.1429896
397166.283768777.2	397166.28	3768777	0	0	0.000355709	0	4.74279E-05	0	0.000806274	0	0.002513677	0	4.34703E-09	1.70395E-07	1.74742E-07	0.1747423
397266.283768777.2	397266.28	3768777	0	0	0.000435673	0	5.80898E-05	0	0.000987526	0	0.003078757	0	5.32426E-09	2.08701E-07	2.14025E-07	0.2140248
397366.283768777.2	397366.28	3768777	0	0	0.00050838	0	6.7784E-05	0	0.001152328	0	0.003592551	0	6.21279E-09	2.43529E-07	2.49742E-07	0.249742
397466.283768777.2	397466.28	3768777	0	0	0.000550866	0	7.34488E-05	0	0.00124863	0	0.003892787	0	6.732E-09	2.63881E-07	2.70613E-07	0.2706134
397566.283768777.2	397566.28	3768777	0	0	0.000549279	0	7.32371E-05	0	0.001245031	0	0.003881569	0	6.7126E-09	2.63121E-07	2.69834E-07	0.2698335
397666.283768777.2	397666.28	3768777	0	0	0.000507076	0	6.76101E-05	0	0.001149372	0	0.003583336	0	6.19685E-09	2.42905E-07	2.49101E-07	0.2491014
397766.283768777.2	397766.28	3768777	0	0	0.0004414	0	5.88533E-05	0	0.001000506	0	0.003119225	0	5.39424E-09	2.11444E-07	2.16838E-07	0.216838
397866.283768777.2	397866.28	3768777	0	0	0.000373739	0	4.98319E-05	0	0.000847142	0	0.002641091	0	4.56738E-09	1.79032E-07	1.836E-07	0.1835997
396166.283768877.2	396166.28	3768877	0	0	6.5695E-05	0	8.75933E-06	0	0.000148909	0	0.000464244	0	8.02842E-10	3.14699E-08	3.22727E-08	0.0322727
396266.283768877.2	396266.28	3768877	0	0	7.34627E-05	0	9.79502E-06	0	0.000166515	0	0.000519136	0	8.97769E-10	3.51908E-08	3.60886E-08	0.0360886
396366.283768877.2	396366.28	3768877	0	0	8.21754E-05	0	1.09567E-05	0	0.000186264	0	0.000580706	0	1.00425E-09	3.93645E-08	4.03687E-08	0.0403687
396466.283768877.2	396466.28	3768877	0	0	9.34584E-05	0	1.24611E-05	0	0.000211839	0	0.00066044	0	1.14213E-09	4.47694E-08	4.59115E-08	0.0459115
396566.283768877.2	396566.28	3768877	0	0	0.000106575	0	1.421E-05	0	0.000241569	0	0.000753128	0	1.30242E-09	5.10525E-08	5.23549E-08	0.0523549
396666.283768877.2	396666.28	3768877	0	0	0.000122488	0	1.63318E-05	0	0.00027764	0	0.000865583	0	1.4969E-09	5.86755E-08	6.01724E-08	0.0601724
396766.283768877.2	396766.28	3768877	0	0	0.000143316	0	1.91087E-05	0	0.000324849	0	0.001012763	0	1.75142E-09	6.86524E-08	7.04039E-08	0.0704039
396866.283768877.2	396866.28	3768877	0	0	0.00017106	0	2.2808E-05	0	0.000387736	0	0.001208825	0	2.09048E-09	8.19429E-08	8.40334E-08	0.0840334
396966.283768877.2	396966.28	3768877	0	0	0.00020266	0	2.70214E-05	0	0.000459363	0	0.001432132	0	2.47666E-09	9.70803E-08	9.9557E-08	0.099557
397066.283768877.2	397066.28	3768877	0	0	0.000238702	0	3.18269E-05	0	0.000541057	0	0.001686826	0	2.91712E-09	1.14345E-07	1.17262E-07	0.1172624
397166.283768877.2	397166.28	3768877	0	0	0.00028219	0	3.76253E-05	0	0.00063963	0	0.00199414	0	3.44857E-09	1.35177E-07	1.38626E-07	0.1386259
397266.283768877.2	397266.28	3768877	0	0	0.000332935	0	4.43913E-05	0	0.000754653	0	0.002352741	0	4.06872E-09	1.59486E-07	1.63555E-07	0.1635546
397366.283768877.2	397366.28	3768877	0	0	0.000377481	0	5.03309E-05	0	0.000855624	0	0.002667535	0	4.61311E-09	1.80825E-07	1.85438E-07	0.185438
397466.283768877.2	397466.28	3768877	0	0	0.000408269	0	5.44358E-05	0	0.000925409	0	0.0028851	0	4.98935E-09	1.95573E-07	2.00562E-07	0.2005624
397566.283768877.2	397566.28	3768877	0	0	0.000414619	0	5.52825E-05	0	0.000939803	0	0.002929975	0	5.06696E-09	1.98615E-07	2.03682E-07	0.2036819
397666.283768877.2	397666.28	3768877	0	0	0.000392299	0	5.23065E-05	0	0.00088921	0	0.002772244	0	4.79419E-09	1.87923E-07	1.92717E-07	0.192717
397766.283768877.2	397766.28	3768877	0	0	0.000354877	0	4.7317E-05	0	0.000804389	0	0.002507801	0	4.33687E-09	1.69997E-07	1.74334E-07	0.1743338
397866.283768877.2	397866.28	3768877	0	0	0.000312826	0	4.17101E-05	0	0.000709072	0	0.002210636	0	3.82297E-09	1.49853E-07	1.53676E-07	0.153676
3964253767739	396425	3767739	0	0	0.000127364	0	1.69819E-05	0	0.000288692	0	0.000900041	0	1.55649E-09	6.10113E-08	6.25678E-08	0.0625678
3964753767739	396475	3767739	0	0	0.000139403	0	1.85871E-05	0	0.000315981	0	0.000985117	0	1.70361E-09	6.67784E-08	6.8482E-08	0.068482
3965253767739	396525	3767739	0	0	0.000152123	0	2.0283E-05	0	0.000344812	0	0.001075001	0	1.85905E-09	7.28714E-08	7.47304E-08	0.0747304
3965753767739	396575	3767739	0	0	0.000168206	0	2.24275E-05	0	0.000381268	0	0.001188658	0	2.05561E-09	8.05759E-08	8.26315E-08	0.0826315
3966253767739	396625	3767739	0	0	0.000182967	0	2.43956E-05	0	0.000414725	0	0.001292966	0	2.23599E-09	8.76466E-08	8.98826E-08	0.0898826
3966753767739	396675	3767739	0	0	0.000203738	0	2.7165E-05	0	0.000461805	0	0.001439745	0	2.48983E-09	9.75964E-08	1.00086E-07	0.1000862
3967253767739	396725	3767739	0	0	0.000233278	0	3.11037E-05	0	0.000528762	0	0.001648495	0	2.85083E-09	1.11747E-07	1.14598E-07	0.1145978
3967753767739	396775	3767739	0	0	0.000261268	0	3.48357E-05	0	0.000592207	0	0.001846293	0	3.19289E-09	1.25155E-07	1.28348E-07	0.128348
3968253767739	396825	3767739	0	0	0.000300144	0	4.00192E-05	0	0.000680327	0	0.00212102	0	3.66799E-09	1.43778E-07	1.47446E-07	0.1474461
3968753767739	396875	3767739	0	0	0.00034522	0	4.60293E-05	0	0.000782498	0	0.002439553	0	4.21885E-09	1.65371E-07	1.69589E-07	0.1695895
3969253767739	396925	3767739	0	0	0.000394113	0	5.25484E-05	0	0.000893323	0	0.002785065	0	4.81636E-09	1.88792E-07	1.93608E-07	0.1936083
3969753767739	396975	3767739	0	0	0.000448601	0	5.98134E-05	0	0.001016828	0	0.00317011	0	5.48224E-09	2.14893E-07	2.20375E-07	0.2203753
3970253767739	397025	3767739	0	0	0.000506773	0	6.75698E-05	0	0.001148686	0	0.003581199	0	6.19315E-09	2.4276E-07	2.48953E-07	0.2489528
3970753767739	397075	3767739	0	0	0.000564738	0	7.52985E-05	0	0.001280074	0	0.003990818	0	6.90153E-09	2.70527E-07	2.77428E-07	0.2774282
3971253767739	397125	3767739	0	0	0.000620001	0	8.26668E-05	0	0.001405335	0	0.004381339	0	7.57688E-09	2.96999E-07	3.04576E-07	0.3045759
3971753767739	397175	3767739	0	0	0.000671238	0	8.94983E-05	0	0.001521472	0	0.004743412	0	8.20303E-09	3.21543E-07	3.29746E-07	0.329746
3972253767739	397225	3767739	0	0	0.000711021	0	9.48028E-05	0	0.001611648	0	0.00502455	0	8.68922E-09	3.40601E-07	3.4929E-07	0.3492897
3972753767739	397275	3767739	0	0	0.000739087	0	9.85449E-05	0	0.001675264	0	0.005222882	0	9.0322E-09	3.54045E-07	3.63077E-07	0.3630771
3973253767739	397325	3767739	0	0	0.000739408	0	9.85878E-05	0	0.001675992	0	0.005225153	0	9.03613E-09	3.54199E-07	3.63235E-07	0.3632349

Garvey Reservoir Rehab - Unmitigated Facility Electrical System			Demolition - 2025	Demolition - 2026	ite Preparation - 202	te Preparation - 202	Grading - 2025	Grading - 2026	nfrastructure - 202	nfrastructure - 202	Paving - 2025	itectural Coating -	Child Risk			
Unique Identifier	X (UTM)	Y (UTM)	1900	1900	2025	1900	2026	1900	2026	1900	2026	1900	3rd Trimester	0<2	Total	per million
3973753767739	397375	3767739	0	0	0.00071998	0	9.59973E-05	0	0.001631954	0	0.005087856	0	8.79869E-09	3.44892E-07	3.53691E-07	0.3536905
3974253767739	397425	3767739	0	0	0.000688984	0	9.18646E-05	0	0.001561698	0	0.004868822	0	8.41991E-09	3.30044E-07	3.38464E-07	0.3384641
3974753767739	397475	3767739	0	0	0.000647122	0	8.62829E-05	0	0.001466809	0	0.004572994	0	7.90832E-09	3.09991E-07	3.17899E-07	0.317899
3975253767739	397525	3767739	0	0	0.000593504	0	7.91338E-05	0	0.001345275	0	0.004194092	0	7.25306E-09	2.84306E-07	2.91559E-07	0.2915591
3964253767789	396425	3767789	0	0	0.000129916	0	1.73221E-05	0	0.000294476	0	0.000918071	0	1.58767E-09	6.22335E-08	6.38212E-08	0.0638212
3964753767789	396475	3767789	0	0	0.000141974	0	1.89298E-05	0	0.000321807	0	0.001003281	0	1.73503E-09	6.80096E-08	6.97447E-08	0.0697447
3965253767789	396525	3767789	0	0	0.000155298	0	2.07064E-05	0	0.000352009	0	0.001097438	0	1.89786E-09	7.43923E-08	7.62902E-08	0.0762902
3965753767789	396575	3767789	0	0	0.000170588	0	2.2745E-05	0	0.000386665	0	0.001205486	0	2.08471E-09	8.17166E-08	8.38013E-08	0.0838013
3966253767789	396625	3767789	0	0	0.000189809	0	2.53078E-05	0	0.000430233	0	0.001341314	0	2.3196E-09	9.0924E-08	9.32436E-08	0.0932436
3966753767789	396675	3767789	0	0	0.000214038	0	2.85384E-05	0	0.000485152	0	0.001512534	0	2.6157E-09	1.02531E-07	1.05146E-07	0.1051462
3967253767789	396725	3767789	0	0	0.000246148	0	3.28198E-05	0	0.000557936	0	0.001739447	0	3.00812E-09	1.17912E-07	1.2092E-07	0.1209205
3967753767789	396775	3767789	0	0	0.000280716	0	3.74287E-05	0	0.000636288	0	0.001983723	0	3.43056E-09	1.34471E-07	1.37902E-07	0.1379017
3968253767789	396825	3767789	0	0	0.000324922	0	4.33229E-05	0	0.000736489	0	0.002296113	0	3.97079E-09	1.55647E-07	1.59618E-07	0.159618
3968753767789	396875	3767789	0	0	0.000377047	0	5.02729E-05	0	0.000854639	0	0.002664463	0	4.60779E-09	1.80617E-07	1.85224E-07	0.1852245
3969253767789	396925	3767789	0	0	0.000438395	0	5.84526E-05	0	0.000993695	0	0.003097989	0	5.35751E-09	2.10004E-07	2.15362E-07	0.2153617
3969753767789	396975	3767789	0	0	0.00051112	0	6.81494E-05	0	0.001158539	0	0.003611917	0	6.24628E-09	2.44842E-07	2.51088E-07	0.2510883
3970253767789	397025	3767789	0	0	0.00059373	0	7.91641E-05	0	0.001345789	0	0.004195695	0	7.25583E-09	2.84415E-07	2.91671E-07	0.2916705
3970753767789	397075	3767789	0	0	0.000683258	0	9.1101E-05	0	0.001548718	0	0.004828355	0	8.34992E-09	3.27301E-07	3.35651E-07	0.3356509
3971253767789	397125	3767789	0	0	0.000774184	0	0.000103224	0	0.001754816	0	0.005470898	0	9.46111E-09	3.70857E-07	3.80318E-07	0.3803183
3971753767789	397175	3767789	0	0	0.000861556	0	0.000114874	0	0.001952861	0	0.006088332	0	1.05289E-08	4.12711E-07	4.2324E-07	0.4232402
3972253767789	397225	3767789	0	0	0.000934528	0	0.000124604	0	0.002118263	0	0.006603996	0	1.14206E-08	4.47667E-07	4.59087E-07	0.4590874
3972753767789	397275	3767789	0	0	0.000991208	0	0.000132161	0	0.002246737	0	0.007004533	0	1.21133E-08	4.74818E-07	4.86931E-07	0.4869315
3973253767789	397325	3767789	0	0	0.001004626	0	0.00013395	0	0.002277153	0	0.007099359	0	1.22773E-08	4.81246E-07	4.93523E-07	0.4935234
3973753767789	397375	3767789	0	0	0.000976995	0	0.000130266	0	0.002214522	0	0.006904098	0	1.19396E-08	4.6801E-07	4.7995E-07	0.4799496
3974253767789	397425	3767789	0	0	0.000920958	0	0.000122794	0	0.002087504	0	0.006508102	0	1.12548E-08	4.41166E-07	4.52421E-07	0.4524212
3974753767789	397475	3767789	0	0	0.000826328	0	0.000110177	0	0.001873009	0	0.005839382	0	1.00983E-08	3.95836E-07	4.05934E-07	0.4059341
3975253767789	397525	3767789	0	0	0.000748008	0	9.97344E-05	0	0.001695484	0	0.005285921	0	9.14122E-09	3.58318E-07	3.67459E-07	0.3674594
3964253767839	396425	3767839	0	0	0.00013207	0	1.76094E-05	0	0.000299359	0	0.000933297	0	1.614E-09	6.32656E-08	6.48796E-08	0.0648796
3964753767839	396475	3767839	0	0	0.000144998	0	1.9333E-05	0	0.000328661	0	0.00102465	0	1.77198E-09	6.94582E-08	7.12302E-08	0.0712302
3965253767839	396525	3767839	0	0	0.000157868	0	2.10491E-05	0	0.000357835	0	0.001115602	0	1.92927E-09	7.56236E-08	7.75529E-08	0.0775529
3965753767839	396575	3767839	0	0	0.00017518	0	2.33574E-05	0	0.000397075	0	0.00123794	0	2.14083E-09	8.39166E-08	8.60574E-08	0.0860574
3966253767839	396625	3767839	0	0	0.000196121	0	2.61495E-05	0	0.000444541	0	0.001385922	0	2.39675E-09	9.39478E-08	9.63446E-08	0.0963446
3966753767839	396675	3767839	0	0	0.000226039	0	3.01385E-05	0	0.000512355	0	0.001597342	0	2.76237E-09	1.08279E-07	1.11042E-07	0.1110418
3967253767839	396725	3767839	0	0	0.000258735	0	3.4498E-05	0	0.000586467	0	0.001828396	0	3.16194E-09	1.23942E-07	1.27104E-07	0.1271039
3967753767839	396775	3767839	0	0	0.000298198	0	3.97597E-05	0	0.000675915	0	0.002107263	0	3.6442E-09	1.42846E-07	1.4649E-07	0.1464898
3968253767839	396825	3767839	0	0	0.000347299	0	4.63065E-05	0	0.00078721	0	0.002454244	0	4.24425E-09	1.66367E-07	1.70611E-07	0.1706108
3968753767839	396875	3767839	0	0	0.000408212	0	5.44283E-05	0	0.000925281	0	0.002884699	0	4.98866E-09	1.95546E-07	2.00535E-07	0.2005345
3969253767839	396925	3767839	0	0	0.000483432	0	6.44577E-05	0	0.00109578	0	0.003416256	0	5.90791E-09	2.31579E-07	2.37487E-07	0.2374866
3969753767839	396975	3767839	0	0	0.000576399	0	7.68533E-05	0	0.001306506	0	0.004073223	0	7.04404E-09	2.76113E-07	2.83157E-07	0.2831567
3970253767839	397025	3767839	0	0	0.000688342	0	9.17789E-05	0	0.001560241	0	0.004864282	0	8.41206E-09	3.29736E-07	3.38148E-07	0.3381484
3970753767839	397075	3767839	0	0	0.000823549	0	0.000109807	0	0.001866712	0	0.005819749	0	1.00644E-08	3.94505E-07	4.04569E-07	0.4045692
3971253767839	397125	3767839	0	0	0.000969265	0	0.000129235	0	0.002197001	0	0.006849474	0	1.18452E-08	4.64307E-07	4.76152E-07	0.4761522
3971753767839	397175	3767839	0	0	0.00113182	0	0.000150909	0	0.00256546	0	0.007998198	0	1.38317E-08	5.42176E-07	5.56008E-07	0.5560077
3972253767839	397225	3767839	0	0	0.001284321	0	0.000171243	0	0.002911128	0	0.00907587	0	1.56954E-08	6.15228E-07	6.30924E-07	0.6309238
3972753767839	397275	3767839	0	0	0.001374642	0	0.000183286	0	0.003115856	0	0.009714139	0	1.67992E-08	6.58495E-07	6.75294E-07	0.6752941
3973253767839	397325	3767839	0	0	0.001376079	0	0.000183477	0	0.003119112	0	0.009724289	0	1.68167E-08	6.59183E-07	6.76E-07	0.6759997
3973753767839	397375	3767839	0	0	0.001400497	0	0.000186733	0	0.00317446	0	0.009896845	0	1.71151E-08	6.7088E-07	6.87995E-07	0.6879952
3974753767839	397475	3767839	0	0	0.001155842	0	0.000154112	0	0.002619908	0	0.008167949	0	1.41253E-08	5.53683E-07	5.67808E-07	0.5678082
3975253767839	397525	3767839	0	0	0.000957264	0	0.000127635	0	0.002169798	0	0.006764665	0	1.16985E-08	4.58558E-07	4.70257E-07	0.4702566
3964253767889	396425	3767889	0	0	0.000133696	0	1.78261E-05	0	0.000303043	0	0.000944783	0	1.63386E-09	6.40442E-08	6.56781E-08	0.0656781
3964753767889	396475	3767889	0	0	0.000145338	0	1.93784E-05	0	0.000329432	0	0.001027054	0	1.77614E-09	6.96212E-08	7.13973E-08	0.0713973
3965253767889	396525	3767889	0	0	0.000160684	0	2.14246E-05	0	0.000364218	0	0.001135502	0	1.96368E-09	7.69726E-08	7.89363E-08	0.0789363
3965753767889	396575	3767889	0	0	0.000180151	0	2.40201E-05	0	0.000408342	0	0.001273066	0	2.20158E-09	8.62977E-08	8.84992E-08	0.0884992
3974753767889	397475	3767889	0	0	0.001613722	0	0.000215163	0	0.00365777	0	0.011403636	0	1.97209E-08	7.73021E-07	7.92742E-07	0.7927422
3975253767889	397525	3767889	0	0	0.001200577	0	0.000160077	0	0.002721308	0	0.008484078	0	1.4672E-08	5.75112E-07	5.89784E-07	0.5897844
3964253767939	396425	3767939	0	0	0.00013483	0	1.79773E-05	0	0.000305614	0	0.000952796	0	1.64772E-09	6.45874E-08	6.62352E-08	0.0662352
3964753767939	396475	3767939	0	0	0.000146906	0	1.95875E-05	0	0.000332988	0	0.001038139	0	1.79531E-09	7.03726E-08	7.21679E-08	0.0721679
3965253767939	396525	3767939	0	0	0.000163217	0	2.17622E-05	0	0.000369958	0	0.001153399	0	1.99463E-09	7.81857E-08	8.01804E-08	0.0801804
3974753767939	397475	3767939	0	0	0.00210169	0	0.000280225	0	0.004763831	0	0.014851945	0	2.56842E-08	1.00677E-06	1.03246E-06	1.032457
3975253767939	397525	3767939	0	0	0.001578966	0	0.000210529	0	0.003578989	0	0.011158024	0	1.92962E-08	7.56372E-07	7.75668E-07	0.7756681
3964253767989	396425	3767989	0	0	0.000134546	0	1.79395E-05	0	0.000304971	0	0.000950793	0	1.64426E-09	6.44516E-08	6.60959E-08	0.0660959
3964753767989	396475	3767989	0	0	0.000148116	0	1.97488E-05	0	0.00033573	0	0.001046687	0	1.81009E-09	7.0952E-08	7.27621E-08	0.0727621
3974753767989	397475	3767989	0	0	0.003040962	0	0.000405462	0	0.006892847	0	0.021489464	0	3.71628E-08	1.45671E-06	1.49387E-06	1.4938748
3975253767989	397525	3767989	0	0	0.002071224	0	0.000276163	0	0.004694775	0	0.014636651	0	2.53119E-08	9.92179E-07	1.01749E-06	1.0174905
3964253768039	396425	3768039	0	0	0.000134773	0	1.79697E-05	0	0.000305485	0	0.000952395	0	1.64703E-09	6.45603E-08	6.62073E-08	0.0662073
3964753768039	396475	3768039	0	0	0.000148948	0	1.98597E-05	0	0.000337615	0	0.001052563	0	1.82025E-09	7.13504E-08	7.31706E-08	0.0731706
3974753768039	397475	3768039	0	0	0.005267994	0	0.000702399	0	0.011940787	0	0.037227159	0	6.43789E-08	2.52353E-06	2.58791E-06	2.5879062
3975253768039	397525	3768039	0	0	0.003360648	0	0.000448086	0	0.00761747	0	0.023748581	0	4.10697E-08	1.60985E-06	1.65092E-06	1.6509211
3964253768089	396425	3768089	0	0	0.000134792	0	1.79722E-05	0	0.000305528	0	0.000952529	0	1.64726E-09	6.45693E-08	6.62166E-08	0.0662166

Garvey Reservoir Rehab - Unmitigated Facility Electrical System			Demolition - 2025	Demolition - 2026	ite Preparation - 202	te Preparation - 202	Grading - 2025	Grading - 2026	nfrastructure - 202	nfrastructure - 202	Paving - 2025	itectural Coating -	Child Risk			
Unique Identifier	X (UTM)	Y (UTM)	1900	1900	2025	1900	2026	1900	2026	1900	2026	1900	3rd Trimester	0<2	Total	per million
3964753768089	396475	3768089	0	0	0.000149212	0	1.9895E-05	0	0.000338214	0	0.001054433	0	1.82349E-09	7.14771E-08	7.33006E-08	0.0733006
3974753768089	397475	3768089	0	0	0.008562551	0	0.001141673	0	0.019408448	0	0.060508692	0	1.04641E-07	4.10172E-06	4.20636E-06	4.2063596
3975253768089	397525	3768089	0	0	0.004692729	0	0.000625697	0	0.010636852	0	0.03316195	0	5.73487E-08	2.24796E-06	2.30531E-06	2.3053066
3964253768139	396425	3768139	0	0	0.000135113	0	1.80151E-05	0	0.000306256	0	0.000954799	0	1.65118E-09	6.47232E-08	6.63744E-08	0.0663744
3964753768139	396475	3768139	0	0	0.000148381	0	1.97841E-05	0	0.000336329	0	0.001048556	0	1.81332E-09	7.10788E-08	7.28921E-08	0.0728921
3974253768139	397425	3768139	0	0	0.037521551	0	0.005002873	0	0.085048848	0	0.265152292	0	4.58542E-07	1.79739E-05	1.84325E-05	18.432491
3974753768139	397475	3768139	0	0	0.012235401	0	0.001631387	0	0.027733576	0	0.086463502	0	1.49526E-07	5.86112E-06	6.01065E-06	6.0106502
3975253768139	397525	3768139	0	0	0.005663336	0	0.000755111	0	0.012836894	0	0.040020906	0	6.92102E-08	2.71291E-06	2.78212E-06	2.782118
3964253768189	396425	3768189	0	0	0.000133771	0	1.78362E-05	0	0.000303215	0	0.000945317	0	1.63479E-09	6.40804E-08	6.57152E-08	0.0657152
3964753768189	396475	3768189	0	0	0.000146944	0	1.95926E-05	0	0.000333074	0	0.001038406	0	1.79577E-09	7.03907E-08	7.21865E-08	0.0721865
3973753768189	397375	3768189	0	0	0.041287879	0	0.00550505	0	0.093585858	0	0.291767675	0	5.04569E-07	1.97781E-05	2.02827E-05	20.282702
3974253768189	397425	3768189	0	0	0.022341065	0	0.002978809	0	0.050639748	0	0.15787686	0	2.73025E-07	1.0702E-05	1.09751E-05	10.975065
3974753768189	397475	3768189	0	0	0.011412211	0	0.001521628	0	0.025867678	0	0.080646291	0	1.39466E-07	5.46679E-06	5.60626E-06	5.6062574
3975253768189	397525	3768189	0	0	0.005947642	0	0.000793019	0	0.013481322	0	0.042030005	0	7.26847E-08	2.8491E-06	2.92178E-06	2.9217838
3964253768239	396425	3768239	0	0	0.000131938	0	1.75917E-05	0	0.000299059	0	0.000932362	0	1.61238E-09	6.32023E-08	6.48146E-08	0.0648146
3964753768239	396475	3768239	0	0	0.000144922	0	1.93229E-05	0	0.00032849	0	0.001024116	0	1.77106E-09	6.9422E-08	7.1193E-08	0.071193
3973753768239	397375	3768239	0	0	0.015680077	0	0.002090677	0	0.035541508	0	0.110805878	0	1.91622E-07	7.51123E-06	7.70285E-06	7.7028499
3974253768239	397425	3768239	0	0	0.011532696	0	0.001537693	0	0.026140777	0	0.081497717	0	1.40938E-07	5.52451E-06	5.66545E-06	5.6654457
3974753768239	397475	3768239	0	0	0.007644711	0	0.001019295	0	0.017328012	0	0.054022627	0	9.34241E-08	3.66205E-06	3.75547E-06	3.7554703
3975253768239	397525	3768239	0	0	0.004928293	0	0.000657106	0	0.011170798	0	0.034826605	0	6.02275E-08	2.3608E-06	2.42103E-06	2.4210278
3964253768289	396425	3768289	0	0	0.000129557	0	1.72742E-05	0	0.000293662	0	0.000915534	0	1.58328E-09	6.20615E-08	6.36448E-08	0.0636448
3964753768289	396475	3768289	0	0	0.000142371	0	1.89827E-05	0	0.000322707	0	0.001006085	0	1.73988E-09	6.81998E-08	6.99396E-08	0.0699396
3973253768289	397325	3768289	0	0	0.006616347	0	0.00088218	0	0.014997054	0	0.04675552	0	8.08568E-08	3.16943E-06	3.25029E-06	3.2502856
3973753768289	397375	3768289	0	0	0.008047877	0	0.00107305	0	0.018241855	0	0.056871666	0	9.83511E-08	3.85517E-06	3.95353E-06	3.9535259
3974253768289	397425	3768289	0	0	0.00776325	0	0.0010351	0	0.017596699	0	0.054860297	0	9.48728E-08	3.71883E-06	3.8137E-06	3.8137023
3974753768289	397475	3768289	0	0	0.006170166	0	0.000822689	0	0.013985709	0	0.043602505	0	7.54041E-08	2.95569E-06	3.0311E-06	3.0310987
3975253768289	397525	3768289	0	0	0.004402072	0	0.000586943	0	0.00997803	0	0.031107976	0	5.37966E-08	2.10872E-06	2.16252E-06	2.1625213
3964253768339	396425	3768339	0	0	0.000127119	0	1.69491E-05	0	0.000288135	0	0.000898305	0	1.55349E-09	6.08936E-08	6.24471E-08	0.0624471
3964753768339	396475	3768339	0	0	0.000139366	0	1.85821E-05	0	0.000315895	0	0.00098485	0	1.70315E-09	6.67603E-08	6.84634E-08	0.0684634
3965253768339	396525	3768339	0	0	0.000154277	0	2.05703E-05	0	0.000349695	0	0.001090226	0	1.88538E-09	7.39035E-08	7.57888E-08	0.0757888
3972753768339	397275	3768339	0	0	0.003137558	0	0.000418341	0	0.007111797	0	0.022172074	0	3.83433E-08	1.50298E-06	1.54133E-06	1.5413276
3973253768339	397325	3768339	0	0	0.00412147	0	0.000549529	0	0.009341999	0	0.029125054	0	5.03675E-08	1.97431E-06	2.02468E-06	2.0246753
3973753768339	397375	3768339	0	0	0.004845513	0	0.000646068	0	0.010983163	0	0.034241625	0	5.92158E-08	2.32115E-06	2.38036E-06	2.380362
3974253768339	397425	3768339	0	0	0.004908335	0	0.000654445	0	0.01112556	0	0.034685569	0	5.99836E-08	2.35124E-06	2.41122E-06	2.4112234
3974753768339	397475	3768339	0	0	0.004335999	0	0.000578133	0	0.009828265	0	0.03064106	0	5.29892E-08	2.07707E-06	2.13006E-06	2.1300629
3975253768339	397525	3768339	0	0	0.003491849	0	0.00046558	0	0.007914858	0	0.024675734	0	4.2673E-08	1.6727E-06	1.71537E-06	1.7153736
3964253768389	396425	3768389	0	0	0.000124114	0	1.65485E-05	0	0.000281324	0	0.000877069	0	1.51676E-09	5.94541E-08	6.09709E-08	0.0609709
3964753768389	396475	3768389	0	0	0.000135869	0	1.81159E-05	0	0.00030797	0	0.000960142	0	1.66042E-09	6.50854E-08	6.67458E-08	0.0667458
3965253768389	396525	3768389	0	0	0.000149911	0	1.99882E-05	0	0.000339799	0	0.001059375	0	1.83203E-09	7.18121E-08	7.36441E-08	0.0736441
3972253768389	397225	3768389	0	0	0.001741786	0	0.000232238	0	0.003948047	0	0.012308618	0	2.12859E-08	8.34368E-07	8.55654E-07	0.8556535
3972753768389	397275	3768389	0	0	0.002250657	0	0.000300088	0	0.005101489	0	0.015904642	0	2.75047E-08	1.07813E-06	1.10564E-06	1.1056369
3973253768389	397325	3768389	0	0	0.002798405	0	0.000373121	0	0.00634305	0	0.019775393	0	3.41986E-08	1.34052E-06	1.37472E-06	1.3747184
3973753768389	397375	3768389	0	0	0.003216728	0	0.000428897	0	0.00729125	0	0.022731544	0	3.93108E-08	1.54091E-06	1.58022E-06	1.5802201
3974253768389	397425	3768389	0	0	0.003325041	0	0.000443339	0	0.007536761	0	0.02349696	0	4.06345E-08	1.59279E-06	1.63343E-06	1.6334292
3974753768389	397475	3768389	0	0	0.003107356	0	0.000414314	0	0.00704334	0	0.02195865	0	3.79742E-08	1.48852E-06	1.52649E-06	1.5264911
3975253768389	397525	3768389	0	0	0.002681624	0	0.00035755	0	0.006078348	0	0.018950143	0	3.27715E-08	1.28458E-06	1.31735E-06	1.3173499
3964253768439	396425	3768439	0	0	0.000121052	0	1.61402E-05	0	0.000274384	0	0.000855433	0	1.47934E-09	5.79875E-08	5.94668E-08	0.0594668
3964753768439	396475	3768439	0	0	0.000132051	0	1.76069E-05	0	0.000299316	0	0.000933163	0	1.61377E-09	6.32566E-08	6.48703E-08	0.0648703
3965253768439	396525	3768439	0	0	0.00014513	0	1.93507E-05	0	0.000328961	0	0.001025585	0	1.7736E-09	6.95216E-08	7.12952E-08	0.0712952
3971753768439	397175	3768439	0	0	0.001073912	0	0.000143188	0	0.002434201	0	0.007588979	0	1.3124E-08	5.14436E-07	5.2756E-07	0.5275602
3972253768439	397225	3768439	0	0	0.001362225	0	0.00018163	0	0.003087711	0	0.009626392	0	1.66474E-08	6.52547E-07	6.69194E-07	0.6691942
3972753768439	397275	3768439	0	0	0.001685465	0	0.000224729	0	0.003820387	0	0.011910618	0	2.05977E-08	8.07388E-07	8.27986E-07	0.8279859
3973253768439	397325	3768439	0	0	0.002016869	0	0.000268916	0	0.00457157	0	0.014252541	0	2.46477E-08	9.66141E-07	9.90788E-07	0.9907885
3973753768439	397375	3768439	0	0	0.002285527	0	0.000304737	0	0.005180527	0	0.016151055	0	2.79309E-08	1.09484E-06	1.12277E-06	1.1227667
3974253768439	397425	3768439	0	0	0.002397941	0	0.000319726	0	0.005435334	0	0.016945452	0	2.93047E-08	1.14869E-06	1.17799E-06	1.1779905
3974753768439	397475	3768439	0	0	0.002308055	0	0.000307741	0	0.005231591	0	0.016310255	0	2.82062E-08	1.10563E-06	1.13383E-06	1.1338337
3975253768439	397525	3768439	0	0	0.002086306	0	0.000278174	0	0.004728961	0	0.01474323	0	2.54962E-08	9.99403E-07	1.0249E-06	1.0248995
3964253768489	396425	3768489	0	0	0.000117518	0	1.5669E-05	0	0.000266373	0	0.000830458	0	1.43615E-09	5.62945E-08	5.77306E-08	0.0577306
3964753768489	396475	3768489	0	0	0.000127875	0	1.70499E-05	0	0.000289849	0	0.000903647	0	1.56272E-09	6.12558E-08	6.28185E-08	0.0628185
3965253768489	396525	3768489	0	0	0.000140103	0	1.86803E-05	0	0.000317566	0	0.000990058	0	1.71216E-09	6.71134E-08	6.88255E-08	0.0688255
3970753768489	397075	3768489	0	0	0.000596282	0	7.95042E-05	0	0.001351572	0	0.004213725	0	7.28701E-09	2.85637E-07	2.92924E-07	0.2929239
3971253768489	397125	3768489	0	0	0.000719337	0	9.59116E-05	0	0.001630497	0	0.005083315	0	8.79084E-09	3.44584E-07	3.53375E-07	0.3533749
3971753768489	397175	3768489	0	0	0.00088108	0	0.000117477	0	0.001997114	0	0.006226296	0	1.07675E-08	4.22064E-07	4.32831E-07	0.4328311
3972253768489	397225	3768489	0	0	0.001083872	0	0.000144516	0	0.002456777	0	0.007659364	0	1.32457E-08	5.19207E-07	5.32453E-07	0.5324531
3972753768489	397275	3768489	0	0	0.001304506	0	0.000173934	0	0.00295688	0	0.009218509	0	1.5942E-08	6.24897E-07	6.4084E-07	0.6408395
3973253768489	397325	3768489	0	0	0.001509793	0	0.000201306	0	0.003422198	0	0.010669205	0	1.84508E-08	7.23236E-07	7.41687E-07	0.7416871
3973753768489	397375	3768489	0	0	0.001691551	0	0.00022554	0	0.003834181	0	0.011953624	0	2.0672E-08	8.10303E-07	8.30975E-07	0.8309755
3974253768489	397425	3768489	0	0	0.001756716	0	0.000234229	0	0.00398189	0	0.012414128	0	2.14684E-08	8.4152E-07	8.62988E-07	0.8629882
3974753768489	397475	3768489	0	0	0.001709127	0	0.000227884	0	0.003874021	0	0.012077832	0	2.08868E-08	8.18723E-07	8.3961E-07	0.83961

Garvey Reservoir Rehab - Unmitigated Facility Electrical System			Demolition - 2025	Demolition - 2026	ite Preparation - 202	te Preparation - 202	Grading - 2025	Grading - 2026	nfrastructure - 202	nfrastructure - 202	Paving - 2025	itectural Coating -	Child Risk			
Unique Identifier	X (UTM)	Y (UTM)	1900	1900	2025	1900	2026	1900	2026	1900	2026	1900	3rd Trimester	0<2	Total	per million
3975253768489	397525	3768489	0	0	0.001616462	0	0.000215528	0	0.003663982	0	0.011423001	0	1.97544E-08	7.74334E-07	7.94088E-07	0.7940884
3964253768539	396425	3768539	0	0	0.000113813	0	1.51751E-05	0	0.000257977	0	0.000804281	0	1.39088E-09	5.452E-08	5.59109E-08	0.0559109
3964753768539	396475	3768539	0	0	0.000123565	0	1.64754E-05	0	0.000280082	0	0.000873196	0	1.51006E-09	5.91916E-08	6.07016E-08	0.0607016
3965253768539	396525	3768539	0	0	0.000134811	0	1.79748E-05	0	0.000305571	0	0.000952662	0	1.64749E-09	6.45784E-08	6.62259E-08	0.0662259
3965753768539	396575	3768539	0	0	0.000146188	0	1.94918E-05	0	0.00033136	0	0.001033064	0	1.78653E-09	7.00286E-08	7.18151E-08	0.0718151
3970253768539	397025	3768539	0	0	0.000444159	0	5.92212E-05	0	0.001006761	0	0.003138724	0	5.42796E-09	2.12766E-07	2.18194E-07	0.2181935
3970753768539	397075	3768539	0	0	0.000522536	0	6.96714E-05	0	0.001184414	0	0.003692585	0	6.38578E-09	2.5031E-07	2.56696E-07	0.2566961
3971253768539	397125	3768539	0	0	0.000617771	0	8.23694E-05	0	0.00140028	0	0.004365579	0	7.54962E-09	2.95931E-07	3.0348E-07	0.3034803
3971753768539	397175	3768539	0	0	0.000738142	0	9.8419E-05	0	0.001673122	0	0.005216204	0	9.02065E-09	3.53592E-07	3.62613E-07	0.3626129
3972253768539	397225	3768539	0	0	0.000878604	0	0.000117147	0	0.001991502	0	0.0062088	0	1.07372E-08	4.20878E-07	4.31615E-07	0.4316148
3972753768539	397275	3768539	0	0	0.001037228	0	0.000138297	0	0.00235105	0	0.007329745	0	1.26757E-08	4.96863E-07	5.09539E-07	0.5095391
3973253768539	397325	3768539	0	0	0.001179504	0	0.000157267	0	0.002673543	0	0.008335162	0	1.44144E-08	5.65018E-07	5.79432E-07	0.5794323
3973753768539	397375	3768539	0	0	0.001304544	0	0.000173939	0	0.002956966	0	0.009218776	0	1.59425E-08	6.24916E-07	6.40858E-07	0.6408581
3974253768539	397425	3768539	0	0	0.001341852	0	0.000178914	0	0.00304153	0	0.009482417	0	1.63984E-08	6.42787E-07	6.59186E-07	0.6591856
3974753768539	397475	3768539	0	0	0.001332383	0	0.000177651	0	0.003020068	0	0.009415505	0	1.62827E-08	6.38251E-07	6.54534E-07	0.6545341
3975253768539	397525	3768539	0	0	0.001272925	0	0.000169723	0	0.002885296	0	0.008995335	0	1.55561E-08	6.09769E-07	6.25325E-07	0.6253253
3964253768589	396425	3768589	0	0	0.000109088	0	1.45451E-05	0	0.000247267	0	0.000770891	0	1.33314E-09	5.22566E-08	5.35898E-08	0.0535898
3964753768589	396475	3768589	0	0	0.000119086	0	1.58782E-05	0	0.000269929	0	0.000841543	0	1.45532E-09	5.70459E-08	5.85012E-08	0.0585012
3965253768589	396525	3768589	0	0	0.000128782	0	1.71709E-05	0	0.000291905	0	0.000910058	0	1.57381E-09	6.16903E-08	6.32641E-08	0.0632641
3965753768589	396575	3768589	0	0	0.000135075	0	1.801E-05	0	0.000306171	0	0.000954532	0	1.65072E-09	6.47051E-08	6.63559E-08	0.0663559
3966253768589	396625	3768589	0	0	0.000146699	0	1.95598E-05	0	0.000332517	0	0.00103667	0	1.79277E-09	7.0273E-08	7.20658E-08	0.0720658
3968253768589	396825	3768589	0	0	0.000236755	0	3.15673E-05	0	0.000536645	0	0.001673069	0	2.89333E-09	1.13413E-07	1.16306E-07	0.1163061
3968753768589	396875	3768589	0	0	0.00026741	0	3.56547E-05	0	0.00060613	0	0.001889699	0	3.26795E-09	1.28098E-07	1.31365E-07	0.1313655
3969253768589	396925	3768589	0	0	0.000302601	0	4.03468E-05	0	0.000685896	0	0.002138382	0	3.69802E-09	1.44955E-07	1.48653E-07	0.1486531
3969753768589	396975	3768589	0	0	0.000347488	0	4.63317E-05	0	0.000787639	0	0.00245558	0	4.24656E-09	1.66457E-07	1.70704E-07	0.1707036
3970253768589	397025	3768589	0	0	0.000400293	0	5.33724E-05	0	0.000907331	0	0.002828738	0	4.89188E-09	1.91752E-07	1.96644E-07	0.1966443
3970753768589	397075	3768589	0	0	0.00046081	0	6.14413E-05	0	0.001044502	0	0.003256388	0	5.63144E-09	2.20742E-07	2.26373E-07	0.2263731
3971253768589	397125	3768589	0	0	0.000538109	0	7.17479E-05	0	0.001219714	0	0.003802636	0	6.5761E-09	2.5777E-07	2.64346E-07	0.2643464
3971753768589	397175	3768589	0	0	0.000627504	0	8.36672E-05	0	0.001422342	0	0.004434361	0	7.66857E-09	3.00593E-07	3.08262E-07	0.3082618
3972253768589	397225	3768589	0	0	0.000727483	0	9.69977E-05	0	0.001648961	0	0.005140878	0	8.89039E-09	3.48486E-07	3.57376E-07	0.3573765
3972753768589	397275	3768589	0	0	0.000836533	0	0.000111538	0	0.001896142	0	0.005911502	0	1.02231E-08	4.00725E-07	4.10948E-07	0.4109477
3973253768589	397325	3768589	0	0	0.000947587	0	0.000126345	0	0.002147865	0	0.006696284	0	1.15802E-08	4.53923E-07	4.65503E-07	0.465503
3973753768589	397375	3768589	0	0	0.001035092	0	0.000138012	0	0.002346209	0	0.007314653	0	1.26496E-08	4.9584E-07	5.0849E-07	0.5084899
3974253768589	397425	3768589	0	0	0.001056354	0	0.000140847	0	0.002394403	0	0.007464905	0	1.29094E-08	5.06025E-07	5.18935E-07	0.5189349
3974753768589	397475	3768589	0	0	0.001058414	0	0.000141122	0	0.002399073	0	0.007479462	0	1.29346E-08	5.07012E-07	5.19947E-07	0.5199469
3975253768589	397525	3768589	0	0	0.001030216	0	0.000137362	0	0.002335157	0	0.007280195	0	1.259E-08	4.93505E-07	5.06095E-07	0.5060945
3964253768639	396425	3768639	0	0	0.000100357	0	1.33809E-05	0	0.000227475	0	0.000709188	0	1.22644E-09	4.80739E-08	4.93003E-08	0.0493003
3964753768639	396475	3768639	0	0	0.000114531	0	1.52709E-05	0	0.000259605	0	0.000809356	0	1.39966E-09	5.4864E-08	5.62637E-08	0.0562637
3965253768639	396525	3768639	0	0	0.000118444	0	1.57925E-05	0	0.000268472	0	0.000837002	0	1.44747E-09	5.67381E-08	5.81856E-08	0.0581856
3965753768639	396575	3768639	0	0	0.000129235	0	1.72314E-05	0	0.000292933	0	0.000913263	0	1.57935E-09	6.19076E-08	6.3487E-08	0.063487
3966253768639	396625	3768639	0	0	0.000145697	0	1.94263E-05	0	0.000330246	0	0.001029591	0	1.78053E-09	6.97932E-08	7.15737E-08	0.0715737
3966753768639	396675	3768639	0	0	0.000160873	0	2.14498E-05	0	0.000364646	0	0.001136838	0	1.96599E-09	7.70631E-08	7.90291E-08	0.0790291
3967253768639	396725	3768639	0	0	0.00017828	0	2.37706E-05	0	0.000404101	0	0.001259844	0	2.17871E-09	8.54014E-08	8.75801E-08	0.0875801
3967753768639	396775	3768639	0	0	0.000197595	0	2.6346E-05	0	0.000447882	0	0.001396339	0	2.41476E-09	9.4654E-08	9.70688E-08	0.0970688
3968253768639	396825	3768639	0	0	0.000220294	0	2.93725E-05	0	0.000499332	0	0.001556741	0	2.69215E-09	1.05527E-07	1.08219E-07	0.1082194
3968753768639	396875	3768639	0	0	0.000246658	0	3.28878E-05	0	0.000559093	0	0.001743053	0	3.01435E-09	1.18157E-07	1.21171E-07	0.1211712
3969253768639	396925	3768639	0	0	0.000277503	0	3.70003E-05	0	0.000629006	0	0.001961018	0	3.39129E-09	1.32932E-07	1.36323E-07	0.1363234
3969753768639	396975	3768639	0	0	0.000314905	0	4.19873E-05	0	0.000713784	0	0.002225328	0	3.84837E-09	1.50849E-07	1.54697E-07	0.1546973
3970253768639	397025	3768639	0	0	0.000358147	0	4.77529E-05	0	0.0008118	0	0.002530906	0	4.37683E-09	1.71563E-07	1.7594E-07	0.17594
3970753768639	397075	3768639	0	0	0.000406549	0	5.42065E-05	0	0.000921511	0	0.002872946	0	4.96833E-09	1.94749E-07	1.99717E-07	0.1997175
3971253768639	397125	3768639	0	0	0.000459203	0	6.12271E-05	0	0.001040861	0	0.003245036	0	5.61181E-09	2.19972E-07	2.25584E-07	0.2255839
3971753768639	397175	3768639	0	0	0.000534272	0	7.12363E-05	0	0.001211017	0	0.003775524	0	6.52921E-09	2.55932E-07	2.62462E-07	0.2624617
3972253768639	397225	3768639	0	0	0.000611288	0	8.15051E-05	0	0.001385586	0	0.004319769	0	7.4704E-09	2.92825E-07	3.00296E-07	0.3002958
3972753768639	397275	3768639	0	0	0.000694371	0	9.25828E-05	0	0.001573907	0	0.004906886	0	8.48573E-09	3.32624E-07	3.4111E-07	0.3411101
3973253768639	397325	3768639	0	0	0.000775696	0	0.000103426	0	0.001758243	0	0.005481582	0	9.47959E-09	3.71581E-07	3.81061E-07	0.3810611
3973753768639	397375	3768639	0	0	0.000841428	0	0.00011219	0	0.001907238	0	0.005946094	0	1.02829E-08	4.03069E-07	4.13352E-07	0.4133523
3974253768639	397425	3768639	0	0	0.000885559	0	0.000118075	0	0.002007267	0	0.006257949	0	1.08222E-08	4.24209E-07	4.35031E-07	0.4350315
3974753768639	397475	3768639	0	0	0.000861292	0	0.000114839	0	0.001952261	0	0.006086462	0	1.05256E-08	4.12585E-07	4.2311E-07	0.4231103
3975253768639	397525	3768639	0	0	0.000850632	0	0.000113418	0	0.0019281	0	0.006011136	0	1.03954E-08	4.07478E-07	4.17874E-07	0.4178738
3964253768689	396425	3768689	0	0	9.45924E-05	0	1.26123E-05	0	0.000214409	0	0.000668453	0	1.15599E-09	4.53126E-08	4.64686E-08	0.0464686
3964753768689	396475	3768689	0	0	0.000110014	0	1.46686E-05	0	0.000249366	0	0.000777436	0	1.34446E-09	5.27002E-08	5.40447E-08	0.0540447
3965253768689	396525	3768689	0	0	0.000118727	0	1.58303E-05	0	0.000269115	0	0.000839005	0	1.45094E-09	5.68739E-08	5.83248E-08	0.0583248
3965753768689	396575	3768689	0	0	0.000128725	0	1.71633E-05	0	0.000291777	0	0.000909657	0	1.57312E-09	6.16632E-08	6.32363E-08	0.0632363
3966253768689	396625	3768689	0	0	0.000139914	0	1.86551E-05	0	0.000317138	0	0.000988723	0	1.70985E-09	6.70228E-08	6.87327E-08	0.0687327
3966753768689	396675	3768689	0	0	0.000152822	0	2.03763E-05	0	0.000346397	0	0.001079942	0	1.8676E-09	7.32063E-08	7.50739E-08	0.0750739
3967253768689	396725	3768689	0	0	0.00016745	0	2.23267E-05	0	0.000379554	0	0.001183316	0	2.04637E-09	8.02137E-08	8.22601E-08	0.0822601
3967753768689	396775	3768689	0	0	0.000184384	0	2.45846E-05	0	0.000417938	0	0.001302983	0	2.25332E-09	8.83256E-08	9.05789E-08	0.0905789
3968253768689	396825	3768689	0	0	0.00020404	0	2.72053E-05	0	0.00046249	0	0.001441882	0	2.49352E-09	9.77412E-08	1.00235E-07	0.1002348
3968753768689	396875	3768689	0	0	0.000227173	0	3.02897E-05	0	0.000514925	0	0.001605356	0	2.77623E-09	1.08823E-07	1.11599E-07	0.1115989

Garvey Reservoir Rehab - Unmitigated Facility Electrical System			Demolition - 2025	Demolition - 2026	ite Preparation - 202	te Preparation - 202	Grading - 2025	Grading - 2026	nfrastructure - 202	nfrastructure - 202	Paving - 2025	itectural Coating -	Child Risk			
Unique Identifier	X (UTM)	Y (UTM)	1900	1900	2025	1900	2026	1900	2026	1900	2026	1900	3rd Trimester	0<2	Total	per million
3969253768689	396925	3768689	0	0	0.000253632	0	3.38177E-05	0	0.0005749	0	0.001792336	0	3.09958E-09	1.21498E-07	1.24597E-07	0.1245971
3969753768689	396975	3768689	0	0	0.000284439	0	3.79252E-05	0	0.000644728	0	0.002010034	0	3.47606E-09	1.36255E-07	1.39731E-07	0.1397307
3970253768689	397025	3768689	0	0	0.000320329	0	4.27105E-05	0	0.000726079	0	0.002263659	0	3.91466E-09	1.53447E-07	1.57362E-07	0.1573619
3970753768689	397075	3768689	0	0	0.000362154	0	4.82872E-05	0	0.000820882	0	0.00255922	0	4.42579E-09	1.73483E-07	1.77908E-07	0.1779083
3971253768689	397125	3768689	0	0	0.000402693	0	5.36925E-05	0	0.000912772	0	0.0028457	0	4.92122E-09	1.92902E-07	1.97823E-07	0.1978235
3971753768689	397175	3768689	0	0	0.000460262	0	6.13682E-05	0	0.00104326	0	0.003252515	0	5.62474E-09	2.20479E-07	2.26104E-07	0.2261038
3972253768689	397225	3768689	0	0	0.000521874	0	6.95832E-05	0	0.001182915	0	0.003687911	0	6.3777E-09	2.49993E-07	2.56371E-07	0.2563711
3972753768689	397275	3768689	0	0	0.000583884	0	7.78512E-05	0	0.00132347	0	0.004126112	0	7.1355E-09	2.79698E-07	2.86833E-07	0.2868333
3973253768689	397325	3768689	0	0	0.000644816	0	8.59755E-05	0	0.001461583	0	0.0045567	0	7.88014E-09	3.08886E-07	3.16766E-07	0.3167663
3973753768689	397375	3768689	0	0	0.000696506	0	9.28675E-05	0	0.001578748	0	0.004921978	0	8.51183E-09	3.33647E-07	3.42159E-07	0.3421593
3974253768689	397425	3768689	0	0	0.000732661	0	9.76882E-05	0	0.001660699	0	0.005177473	0	8.95367E-09	3.50967E-07	3.5992E-07	0.3599204
3974753768689	397475	3768689	0	0	0.000749387	0	9.99183E-05	0	0.001698611	0	0.005295671	0	9.15808E-09	3.58979E-07	3.68137E-07	0.3681371
3975253768689	397525	3768689	0	0	0.000745154	0	9.93538E-05	0	0.001689015	0	0.005265754	0	9.10634E-09	3.56951E-07	3.66057E-07	0.3660574

Garvey Reservoir Rehab - Unmitigated Facility Electrical System

Offroad DPM Emissions, Ground Level Concentrations and Health Risk Calculations

Residential Receptors

Phase	Year	Emissions (lbs/day)	Meters	lbs/meter	meters (h1)	lbs/day (H1)	g/s (H1)	meters (h2)	lbs/day (H2)	g/s (H2)	hrs/day
Demolition - 2025	1900		1932.1	0	691.2	0	0	1240.9	0	0	10.00
Demolition - 2026	1900		1932.1	0	691.2	0	0	1240.9	0	0	10.00
Site Preparation - 2025	2025	0.0000	1932.1	0	691.2	0	0	1240.9	0	0	10.00
Site Preparation - 2026	1900		1932.1	0	691.2	0	0	1240.9	0	0	10.00
Grading - 2025	2026	0.0000	1932.1	0	691.2	0	0	1240.9	0	0	10.00
Grading - 2026	1900		1932.1	0	691.2	0	0	1240.9	0	0	10.00
Infrastructure - 2025	2026	0.0001	1932.1	6.52126E-08	691.2	4.50749E-05	5.67932E-07	1240.9	8.09223E-05	1.0196E-06	10.00
Infrastructure - 2026	1900		1932.1	0	691.2	0	0	1240.9	0	0	10.00
Paving - 2025	2026	0.0000	1932.1	0	691.2	0	0	1240.9	0	0	10.00
Architectural Coating - 2026	1900		1932.1	0	691.2	0	0	1240.9	0	0	10.00

		AERMOD Column Identifier:	*5*	*5*	*5*	*5*	*5*	*5*	*5*	*5*	*5*	*5*				
			6	*6*	*6*	*6*	*6*	*6*	*6*	*6*	*6*	*6*			*MAX:*	0.001051
Garvey Reservoir Rehab - Unmitigated Facility Electrical System			Demolition - 2025	Demolition - 2026	Site Preparation - 2025	te Preparation - 202	Grading - 2025	Grading - 2026	Infrastructure - 2025	nfrastructure - 2026	Paving - 2025	rchitectural Coating - 202	Child Risk			
Unique Identifier	X (UTM)	Y (UTM)	1900	1900	2025	1900	2026	1900	2026	1900	2026	1900	3rd Trimester	0<2	Total	per million
396166.283767377.2	396166.28	3767377	0	0	0	0	0	0	4.82584E-08	0	0	0	0	3.93056E-12	3.93056E-12	3.931E-06
396266.283767377.2	396266.28	3767377	0	0	0	0	0	0	4.93524E-08	0	0	0	0	4.01967E-12	4.01967E-12	4.02E-06
396366.283767377.2	396366.28	3767377	0	0	0	0	0	0	5.13596E-08	0	0	0	0	4.18315E-12	4.18315E-12	4.183E-06
396466.283767377.2	396466.28	3767377	0	0	0	0	0	0	5.26977E-08	0	0	0	0	4.29214E-12	4.29214E-12	4.292E-06
396566.283767377.2	396566.28	3767377	0	0	0	0	0	0	5.77712E-08	0	0	0	0	4.70536E-12	4.70536E-12	4.705E-06
396666.283767377.2	396666.28	3767377	0	0	0	0	0	0	5.46195E-08	0	0	0	0	4.44866E-12	4.44866E-12	4.449E-06
396766.283767377.2	396766.28	3767377	0	0	0	0	0	0	5.44053E-08	0	0	0	0	4.43122E-12	4.43122E-12	4.431E-06
396866.283767377.2	396866.28	3767377	0	0	0	0	0	0	5.44529E-08	0	0	0	0	4.4351E-12	4.4351E-12	4.435E-06
396966.283767377.2	396966.28	3767377	0	0	0	0	0	0	5.51734E-08	0	0	0	0	4.49378E-12	4.49378E-12	4.494E-06
397066.283767377.2	397066.28	3767377	0	0	0	0	0	0	5.3782E-08	0	0	0	0	4.38046E-12	4.38046E-12	4.38E-06
397166.283767377.2	397166.28	3767377	0	0	0	0	0	0	5.30464E-08	0	0	0	0	4.32054E-12	4.32054E-12	4.321E-06
397266.283767377.2	397266.28	3767377	0	0	0	0	0	0	5.31104E-08	0	0	0	0	4.32575E-12	4.32575E-12	4.326E-06
397366.283767377.2	397366.28	3767377	0	0	0	0	0	0	5.06893E-08	0	0	0	0	4.12856E-12	4.12856E-12	4.129E-06
397466.283767377.2	397466.28	3767377	0	0	0	0	0	0	4.56335E-08	0	0	0	0	3.71677E-12	3.71677E-12	3.717E-06
397566.283767377.2	397566.28	3767377	0	0	0	0	0	0	4.48866E-08	0	0	0	0	3.65594E-12	3.65594E-12	3.656E-06
397666.283767377.2	397666.28	3767377	0	0	0	0	0	0	4.3569E-08	0	0	0	0	3.54862E-12	3.54862E-12	3.549E-06
397766.283767377.2	397766.28	3767377	0	0	0	0	0	0	4.49648E-08	0	0	0	0	3.66231E-12	3.66231E-12	3.662E-06
397866.283767377.2	397866.28	3767377	0	0	0	0	0	0	4.28292E-08	0	0	0	0	3.48837E-12	3.48837E-12	3.488E-06
396166.283767477.2	396166.28	3767477	0	0	0	0	0	0	5.55344E-08	0	0	0	0	4.52319E-12	4.52319E-12	4.523E-06
396266.283767477.2	396266.28	3767477	0	0	0	0	0	0	5.4263E-08	0	0	0	0	4.41963E-12	4.41963E-12	4.42E-06
396366.283767477.2	396366.28	3767477	0	0	0	0	0	0	5.71677E-08	0	0	0	0	4.65621E-12	4.65621E-12	4.656E-06
396466.283767477.2	396466.28	3767477	0	0	0	0	0	0	6.26129E-08	0	0	0	0	5.09972E-12	5.09972E-12	5.1E-06
396566.283767477.2	396566.28	3767477	0	0	0	0	0	0	6.34637E-08	0	0	0	0	5.16901E-12	5.16901E-12	5.169E-06
396666.283767477.2	396666.28	3767477	0	0	0	0	0	0	6.1621E-08	0	0	0	0	5.01892E-12	5.01892E-12	5.019E-06
396766.283767477.2	396766.28	3767477	0	0	0	0	0	0	6.2103E-08	0	0	0	0	5.05818E-12	5.05818E-12	5.058E-06
396866.283767477.2	396866.28	3767477	0	0	0	0	0	0	6.24656E-08	0	0	0	0	5.08772E-12	5.08772E-12	5.088E-06
396966.283767477.2	396966.28	3767477	0	0	0	0	0	0	6.33955E-08	0	0	0	0	5.16345E-12	5.16345E-12	5.163E-06
397066.283767477.2	397066.28	3767477	0	0	0	0	0	0	6.21772E-08	0	0	0	0	5.06423E-12	5.06423E-12	5.064E-06
397166.283767477.2	397166.28	3767477	0	0	0	0	0	0	6.02189E-08	0	0	0	0	4.90473E-12	4.90473E-12	4.905E-06
397266.283767477.2	397266.28	3767477	0	0	0	0	0	0	6.04179E-08	0	0	0	0	4.92094E-12	4.92094E-12	4.921E-06
397366.283767477.2	397366.28	3767477	0	0	0	0	0	0	5.86004E-08	0	0	0	0	4.7729E-12	4.7729E-12	4.773E-06
397466.283767477.2	397466.28	3767477	0	0	0	0	0	0	5.28551E-08	0	0	0	0	4.30496E-12	4.30496E-12	4.305E-06
397566.283767477.2	397566.28	3767477	0	0	0	0	0	0	5.01255E-08	0	0	0	0	4.08264E-12	4.08264E-12	4.083E-06
397666.283767477.2	397666.28	3767477	0	0	0	0	0	0	4.90262E-08	0	0	0	0	3.9931E-12	3.9931E-12	3.993E-06
397766.283767477.2	397766.28	3767477	0	0	0	0	0	0	4.78618E-08	0	0	0	0	3.89826E-12	3.89826E-12	3.898E-06
397866.283767477.2	397866.28	3767477	0	0	0	0	0	0	4.60623E-08	0	0	0	0	3.75169E-12	3.75169E-12	3.752E-06
396166.283767577.2	396166.28	3767577	0	0	0	0	0	0	5.85404E-08	0	0	0	0	4.76802E-12	4.76802E-12	4.768E-06
396266.283767577.2	396266.28	3767577	0	0	0	0	0	0	6.01789E-08	0	0	0	0	4.90147E-12	4.90147E-12	4.901E-06
396366.283767577.2	396366.28	3767577	0	0	0	0	0	0	6.29392E-08	0	0	0	0	5.12629E-12	5.12629E-12	5.126E-06
396466.283767577.2	396466.28	3767577	0	0	0	0	0	0	6.68318E-08	0	0	0	0	5.44334E-12	5.44334E-12	5.443E-06
396566.283767577.2	396566.28	3767577	0	0	0	0	0	0	7.42387E-08	0	0	0	0	6.04662E-12	6.04662E-12	6.047E-06
396666.283767577.2	396666.28	3767577	0	0	0	0	0	0	7.53816E-08	0	0	0	0	6.1397E-12	6.1397E-12	6.14E-06
396766.283767577.2	396766.28	3767577	0	0	0	0	0	0	7.10828E-08	0	0	0	0	5.78957E-12	5.78957E-12	5.79E-06
396866.283767577.2	396866.28	3767577	0	0	0	0	0	0	7.2875E-08	0	0	0	0	5.93555E-12	5.93555E-12	5.936E-06

Garvey Reservoir Rehab - Unmitigated Facility Electrical System			Demolition - 2025	Demolition - 2026	Site Preparation - 2025	ite Preparation - 202	Grading - 2025	Grading - 2026	Infrastructure - 2025	nfrastructure - 2026	Paving - 2025	rchitectural Coating - 202	Child Risk			
Unique Identifier	X (UTM)	Y (UTM)	1900	1900	2025	1900	2026	1900	2026	1900	2026	1900	3rd Trimester	0<2	Total	per million
396966.283767577.2	396966.28	3767577	0	0	0	0	0	0	7.38717E-08	0	0	0	0	6.01672E-12	6.01672E-12	6.017E-06
397066.283767577.2	397066.28	3767577	0	0	0	0	0	0	7.38894E-08	0	0	0	0	6.01817E-12	6.01817E-12	6.018E-06
397166.283767577.2	397166.28	3767577	0	0	0	0	0	0	7.11631E-08	0	0	0	0	5.79612E-12	5.79612E-12	5.796E-06
397266.283767577.2	397266.28	3767577	0	0	0	0	0	0	7.02197E-08	0	0	0	0	5.71927E-12	5.71927E-12	5.719E-06
397366.283767577.2	397366.28	3767577	0	0	0	0	0	0	6.84696E-08	0	0	0	0	5.57673E-12	5.57673E-12	5.577E-06
397466.283767577.2	397466.28	3767577	0	0	0	0	0	0	6.09922E-08	0	0	0	0	4.96771E-12	4.96771E-12	4.968E-06
397566.283767577.2	397566.28	3767577	0	0	0	0	0	0	5.75304E-08	0	0	0	0	4.68575E-12	4.68575E-12	4.686E-06
397666.283767577.2	397666.28	3767577	0	0	0	0	0	0	5.44013E-08	0	0	0	0	4.4309E-12	4.4309E-12	4.431E-06
397766.283767577.2	397766.28	3767577	0	0	0	0	0	0	5.23333E-08	0	0	0	0	4.26246E-12	4.26246E-12	4.262E-06
397866.283767577.2	397866.28	3767577	0	0	0	0	0	0	4.97493E-08	0	0	0	0	4.05199E-12	4.05199E-12	4.052E-06
396166.283767677.2	396166.28	3767677	0	0	0	0	0	0	7.08796E-08	0	0	0	0	5.77302E-12	5.77302E-12	5.773E-06
396266.283767677.2	396266.28	3767677	0	0	0	0	0	0	6.70624E-08	0	0	0	0	5.46212E-12	5.46212E-12	5.462E-06
396366.283767677.2	396366.28	3767677	0	0	0	0	0	0	7.14612E-08	0	0	0	0	5.82039E-12	5.82039E-12	5.82E-06
396466.283767677.2	396466.28	3767677	0	0	0	0	0	0	8.45253E-08	0	0	0	0	6.88444E-12	6.88444E-12	6.884E-06
396566.283767677.2	396566.28	3767677	0	0	0	0	0	0	8.5292E-08	0	0	0	0	6.94689E-12	6.94689E-12	6.947E-06
396666.283767677.2	396666.28	3767677	0	0	0	0	0	0	7.98975E-08	0	0	0	0	6.50752E-12	6.50752E-12	6.508E-06
396766.283767677.2	396766.28	3767677	0	0	0	0	0	0	8.31757E-08	0	0	0	0	6.77452E-12	6.77452E-12	6.775E-06
396866.283767677.2	396866.28	3767677	0	0	0	0	0	0	8.78496E-08	0	0	0	0	7.1552E-12	7.1552E-12	7.155E-06
396966.283767677.2	396966.28	3767677	0	0	0	0	0	0	8.88059E-08	0	0	0	0	7.23309E-12	7.23309E-12	7.233E-06
397066.283767677.2	397066.28	3767677	0	0	0	0	0	0	8.85386E-08	0	0	0	0	7.21132E-12	7.21132E-12	7.211E-06
397166.283767677.2	397166.28	3767677	0	0	0	0	0	0	8.65801E-08	0	0	0	0	7.0518E-12	7.0518E-12	7.052E-06
397266.283767677.2	397266.28	3767677	0	0	0	0	0	0	7.93981E-08	0	0	0	0	6.46684E-12	6.46684E-12	6.467E-06
397366.283767677.2	397366.28	3767677	0	0	0	0	0	0	8.07646E-08	0	0	0	0	6.57814E-12	6.57814E-12	6.578E-06
397466.283767677.2	397466.28	3767677	0	0	0	0	0	0	6.9462E-08	0	0	0	0	5.65756E-12	5.65756E-12	5.658E-06
397566.283767677.2	397566.28	3767677	0	0	0	0	0	0	6.66442E-08	0	0	0	0	5.42805E-12	5.42805E-12	5.428E-06
397666.283767677.2	397666.28	3767677	0	0	0	0	0	0	6.27614E-08	0	0	0	0	5.11181E-12	5.11181E-12	5.112E-06
397766.283767677.2	397766.28	3767677	0	0	0	0	0	0	5.85869E-08	0	0	0	0	4.7718E-12	4.7718E-12	4.772E-06
397866.283767677.2	397866.28	3767677	0	0	0	0	0	0	5.5754E-08	0	0	0	0	4.54106E-12	4.54106E-12	4.541E-06
396166.283767777.2	396166.28	3767777	0	0	0	0	0	0	7.9549E-08	0	0	0	0	6.47913E-12	6.47913E-12	6.479E-06
396266.283767777.2	396266.28	3767777	0	0	0	0	0	0	9.03676E-08	0	0	0	0	7.36029E-12	7.36029E-12	7.36E-06
396366.283767777.2	396366.28	3767777	0	0	0	0	0	0	8.79503E-08	0	0	0	0	7.1634E-12	7.1634E-12	7.163E-06
396466.283767777.2	396466.28	3767777	0	0	0	0	0	0	9.28522E-08	0	0	0	0	7.56265E-12	7.56265E-12	7.563E-06
396566.283767777.2	396566.28	3767777	0	0	0	0	0	0	8.79114E-08	0	0	0	0	7.16023E-12	7.16023E-12	7.16E-06
396666.283767777.2	396666.28	3767777	0	0	0	0	0	0	9.2456E-08	0	0	0	0	7.53039E-12	7.53039E-12	7.53E-06
396766.283767777.2	396766.28	3767777	0	0	0	0	0	0	1.0134E-07	0	0	0	0	8.25401E-12	8.25401E-12	8.254E-06
396866.283767777.2	396866.28	3767777	0	0	0	0	0	0	1.08223E-07	0	0	0	0	8.8146E-12	8.8146E-12	8.815E-06
396966.283767777.2	396966.28	3767777	0	0	0	0	0	0	1.06896E-07	0	0	0	0	8.70653E-12	8.70653E-12	8.707E-06
397066.283767777.2	397066.28	3767777	0	0	0	0	0	0	1.07043E-07	0	0	0	0	8.71847E-12	8.71847E-12	8.718E-06
397166.283767777.2	397166.28	3767777	0	0	0	0	0	0	1.07189E-07	0	0	0	0	8.73038E-12	8.73038E-12	8.73E-06
397266.283767777.2	397266.28	3767777	0	0	0	0	0	0	9.97286E-08	0	0	0	0	8.12273E-12	8.12273E-12	8.123E-06
397366.283767777.2	397366.28	3767777	0	0	0	0	0	0	9.77948E-08	0	0	0	0	7.96522E-12	7.96522E-12	7.965E-06
397466.283767777.2	397466.28	3767777	0	0	0	0	0	0	8.4394E-08	0	0	0	0	6.87374E-12	6.87374E-12	6.874E-06
397566.283767777.2	397566.28	3767777	0	0	0	0	0	0	7.78492E-08	0	0	0	0	6.34068E-12	6.34068E-12	6.341E-06
397666.283767777.2	397666.28	3767777	0	0	0	0	0	0	7.40874E-08	0	0	0	0	6.03429E-12	6.03429E-12	6.034E-06
397766.283767777.2	397766.28	3767777	0	0	0	0	0	0	6.61501E-08	0	0	0	0	5.38781E-12	5.38781E-12	5.388E-06
397866.283767777.2	397866.28	3767777	0	0	0	0	0	0	6.03086E-08	0	0	0	0	4.91204E-12	4.91204E-12	4.912E-06
396166.283767877.2	396166.28	3767877	0	0	0	0	0	0	8.7916E-08	0	0	0	0	7.16061E-12	7.16061E-12	7.161E-06
396266.283767877.2	396266.28	3767877	0	0	0	0	0	0	1.01545E-07	0	0	0	0	8.27063E-12	8.27063E-12	8.271E-06
396366.283767877.2	396366.28	3767877	0	0	0	0	0	0	1.07341E-07	0	0	0	0	8.74272E-12	8.74272E-12	8.743E-06
396466.283767877.2	396466.28	3767877	0	0	0	0	0	0	1.01855E-07	0	0	0	0	8.29595E-12	8.29595E-12	8.296E-06
396566.283767877.2	396566.28	3767877	0	0	0	0	0	0	1.0081E-07	0	0	0	0	8.21084E-12	8.21084E-12	8.211E-06
397466.283767877.2	397466.28	3767877	0	0	0	0	0	0	1.18192E-07	0	0	0	0	9.62655E-12	9.62655E-12	9.627E-06
397566.283767877.2	397566.28	3767877	0	0	0	0	0	0	9.30936E-08	0	0	0	0	7.58231E-12	7.58231E-12	7.582E-06
397666.283767877.2	397666.28	3767877	0	0	0	0	0	0	7.84755E-08	0	0	0	0	6.39169E-12	6.39169E-12	6.392E-06
397766.283767877.2	397766.28	3767877	0	0	0	0	0	0	6.9464E-08	0	0	0	0	5.65772E-12	5.65772E-12	5.658E-06
397866.283767877.2	397866.28	3767877	0	0	0	0	0	0	6.95791E-08	0	0	0	0	5.6671E-12	5.6671E-12	5.667E-06
396166.283767977.2	396166.28	3767977	0	0	0	0	0	0	9.21507E-08	0	0	0	0	7.50552E-12	7.50552E-12	7.506E-06
396266.283767977.2	396266.28	3767977	0	0	0	0	0	0	1.0649E-07	0	0	0	0	8.6734E-12	8.6734E-12	8.673E-06
396366.283767977.2	396366.28	3767977	0	0	0	0	0	0	1.1518E-07	0	0	0	0	9.3812E-12	9.3812E-12	9.381E-06
396466.283767977.2	396466.28	3767977	0	0	0	0	0	0	1.10665E-07	0	0	0	0	9.01347E-12	9.01347E-12	9.013E-06
397466.283767977.2	397466.28	3767977	0	0	0	0	0	0	1.39392E-07	0	0	0	0	1.13533E-11	1.13533E-11	1.135E-05
397566.283767977.2	397566.28	3767977	0	0	0	0	0	0	1.12568E-07	0	0	0	0	9.16846E-12	9.16846E-12	9.168E-06
397666.283767977.2	397666.28	3767977	0	0	0	0	0	0	9.34362E-08	0	0	0	0	7.61022E-12	7.61022E-12	7.61E-06
397766.283767977.2	397766.28	3767977	0	0	0	0	0	0	9.41203E-08	0	0	0	0	7.66594E-12	7.66594E-12	7.666E-06
397866.283767977.2	397866.28	3767977	0	0	0	0	0	0	8.60711E-08	0	0	0	0	7.01035E-12	7.01035E-12	7.01E-06
396166.283768077.2	396166.28	3768077	0	0	0	0	0	0	1.24227E-07	0	0	0	0	1.01181E-11	1.01181E-11	1.012E-05
396266.283768077.2	396266.28	3768077	0	0	0	0	0	0	1.17734E-07	0	0	0	0	9.58921E-12	9.58921E-12	9.589E-06
396366.283768077.2	396366.28	3768077	0	0	0	0	0	0	1.27762E-07	0	0	0	0	1.0406E-11	1.0406E-11	1.041E-05
396466.283768077.2	396466.28	3768077	0	0	0	0	0	0	1.38306E-07	0	0	0	0	1.12648E-11	1.12648E-11	1.126E-05
397466.283768077.2	397466.28	3768077	0	0	0	0	0	0	2.41898E-07	0	0	0	0	1.97022E-11	1.97022E-11	1.97E-05
397566.283768077.2	397566.28	3768077	0	0	0	0	0	0	1.91162E-07	0	0	0	0	1.55698E-11	1.55698E-11	1.557E-05

Garvey Reservoir Rehab - Unmitigated Facility Electrical System			Demolition - 2025	Demolition - 2026	Site Preparation - 2025	ite Preparation - 202	Grading - 2025	Grading - 2026	Infrastructure - 2025	nfrastructure - 2026	Paving - 2025	rchitectural Coating - 202	Child Risk			
Unique Identifier	X (UTM)	Y (UTM)	1900	1900	2025	1900	2026	1900	2026	1900	2026	1900	3rd Trimester	0<2	Total	per million
397666.283768077.2	397666.28	3768077	0	0	0	0	0	0	1.43419E-07	0	0	0	0	1.16812E-11	1.16812E-11	1.168E-05
397766.283768077.2	397766.28	3768077	0	0	0	0	0	0	1.1198E-07	0	0	0	0	9.12061E-12	9.12061E-12	9.121E-06
397866.283768077.2	397866.28	3768077	0	0	0	0	0	0	9.70612E-08	0	0	0	0	7.90547E-12	7.90547E-12	7.905E-06
396166.283768177.2	396166.28	3768177	0	0	0	0	0	0	1.49824E-07	0	0	0	0	1.22029E-11	1.22029E-11	1.22E-05
396266.283768177.2	396266.28	3768177	0	0	0	0	0	0	1.54745E-07	0	0	0	0	1.26037E-11	1.26037E-11	1.26E-05
396366.283768177.2	396366.28	3768177	0	0	0	0	0	0	1.68458E-07	0	0	0	0	1.37206E-11	1.37206E-11	1.372E-05
396466.283768177.2	396466.28	3768177	0	0	0	0	0	0	1.65874E-07	0	0	0	0	1.35101E-11	1.35101E-11	1.351E-05
397466.283768177.2	397466.28	3768177	0	0	0	0	0	0	5.29026E-07	0	0	0	0	4.30883E-11	4.30883E-11	4.309E-05
397566.283768177.2	397566.28	3768177	0	0	0	0	0	0	2.77513E-07	0	0	0	0	2.26029E-11	2.26029E-11	2.26E-05
397666.283768177.2	397666.28	3768177	0	0	0	0	0	0	1.89379E-07	0	0	0	0	1.54246E-11	1.54246E-11	1.542E-05
397766.283768177.2	397766.28	3768177	0	0	0	0	0	0	1.39652E-07	0	0	0	0	1.13744E-11	1.13744E-11	1.137E-05
397866.283768177.2	397866.28	3768177	0	0	0	0	0	0	1.1459E-07	0	0	0	0	9.33319E-12	9.33319E-12	9.333E-06
396166.283768277.2	396166.28	3768277	0	0	0	0	0	0	1.7819E-07	0	0	0	0	1.45133E-11	1.45133E-11	1.451E-05
396266.283768277.2	396266.28	3768277	0	0	0	0	0	0	1.75353E-07	0	0	0	0	1.42822E-11	1.42822E-11	1.428E-05
396366.283768277.2	396366.28	3768277	0	0	0	0	0	0	1.96843E-07	0	0	0	0	1.60325E-11	1.60325E-11	1.603E-05
396466.283768277.2	396466.28	3768277	0	0	0	0	0	0	2.03696E-07	0	0	0	0	1.65907E-11	1.65907E-11	1.659E-05
397366.283768277.2	397366.28	3768277	0	0	0	0	0	0	4.20457E-06	0	0	0	0	3.42455E-10	3.42455E-10	0.0003425
397466.283768277.2	397466.28	3768277	0	0	0	0	0	0	8.25359E-07	0	0	0	0	6.72241E-11	6.72241E-11	6.722E-05
397566.283768277.2	397566.28	3768277	0	0	0	0	0	0	3.76802E-07	0	0	0	0	3.06899E-11	3.06899E-11	3.069E-05
397666.283768277.2	397666.28	3768277	0	0	0	0	0	0	2.36098E-07	0	0	0	0	1.92298E-11	1.92298E-11	1.923E-05
397766.283768277.2	397766.28	3768277	0	0	0	0	0	0	1.69126E-07	0	0	0	0	1.3775E-11	1.3775E-11	1.378E-05
397866.283768277.2	397866.28	3768277	0	0	0	0	0	0	1.30201E-07	0	0	0	0	1.06047E-11	1.06047E-11	1.06E-05
396166.283768377.2	396166.28	3768377	0	0	0	0	0	0	2.09999E-07	0	0	0	0	1.71041E-11	1.71041E-11	1.71E-05
396266.283768377.2	396266.28	3768377	0	0	0	0	0	0	2.18663E-07	0	0	0	0	1.78097E-11	1.78097E-11	1.781E-05
396366.283768377.2	396366.28	3768377	0	0	0	0	0	0	2.44136E-07	0	0	0	0	1.98845E-11	1.98845E-11	1.988E-05
396466.283768377.2	396466.28	3768377	0	0	0	0	0	0	2.63395E-07	0	0	0	0	2.1453E-11	2.1453E-11	2.145E-05
397266.283768377.2	397266.28	3768377	0	0	0	0	0	0	6.60068E-06	0	0	0	0	5.37614E-10	5.37614E-10	0.0005376
397366.283768377.2	397366.28	3768377	0	0	0	0	0	0	2.96878E-06	0	0	0	0	2.41802E-10	2.41802E-10	0.0002418
397466.283768377.2	397466.28	3768377	0	0	0	0	0	0	9.57957E-07	0	0	0	0	7.80239E-11	7.80239E-11	7.802E-05
397566.283768377.2	397566.28	3768377	0	0	0	0	0	0	4.59895E-07	0	0	0	0	3.74577E-11	3.74577E-11	3.746E-05
397666.283768377.2	397666.28	3768377	0	0	0	0	0	0	2.78761E-07	0	0	0	0	2.27046E-11	2.27046E-11	2.27E-05
397766.283768377.2	397766.28	3768377	0	0	0	0	0	0	1.95974E-07	0	0	0	0	1.59617E-11	1.59617E-11	1.596E-05
397866.283768377.2	397866.28	3768377	0	0	0	0	0	0	1.40971E-07	0	0	0	0	1.14819E-11	1.14819E-11	1.148E-05
396166.283768477.2	396166.28	3768477	0	0	0	0	0	0	2.57641E-07	0	0	0	0	2.09844E-11	2.09844E-11	2.098E-05
396266.283768477.2	396266.28	3768477	0	0	0	0	0	0	2.77657E-07	0	0	0	0	2.26147E-11	2.26147E-11	2.261E-05
396366.283768477.2	396366.28	3768477	0	0	0	0	0	0	3.07757E-07	0	0	0	0	2.50663E-11	2.50663E-11	2.507E-05
396466.283768477.2	396466.28	3768477	0	0	0	0	0	0	3.44617E-07	0	0	0	0	2.80684E-11	2.80684E-11	2.807E-05
397166.283768477.2	397166.28	3768477	0	0	0	0	0	0	1.2268E-06	0	0	0	0	9.99207E-11	9.99207E-11	9.992E-05
397266.283768477.2	397266.28	3768477	0	0	0	0	0	0	6.70005E-06	0	0	0	0	5.45708E-10	5.45708E-10	0.0005457
397366.283768477.2	397366.28	3768477	0	0	0	0	0	0	2.7145E-06	0	0	0	0	2.21091E-10	2.21091E-10	0.0002211
397466.283768477.2	397466.28	3768477	0	0	0	0	0	0	8.8282E-07	0	0	0	0	7.19042E-11	7.19042E-11	7.19E-05
397566.283768477.2	397566.28	3768477	0	0	0	0	0	0	5.27707E-07	0	0	0	0	4.29808E-11	4.29808E-11	4.298E-05
397666.283768477.2	397666.28	3768477	0	0	0	0	0	0	3.27457E-07	0	0	0	0	2.66708E-11	2.66708E-11	2.667E-05
397766.283768477.2	397766.28	3768477	0	0	0	0	0	0	2.07168E-07	0	0	0	0	1.68734E-11	1.68734E-11	1.687E-05
397866.283768477.2	397866.28	3768477	0	0	0	0	0	0	1.61501E-07	0	0	0	0	1.3154E-11	1.3154E-11	1.315E-05
396166.283768577.2	396166.28	3768577	0	0	0	0	0	0	3.27836E-07	0	0	0	0	2.67017E-11	2.67017E-11	2.67E-05
396266.283768577.2	396266.28	3768577	0	0	0	0	0	0	3.69551E-07	0	0	0	0	3.00993E-11	3.00993E-11	3.01E-05
396366.283768577.2	396366.28	3768577	0	0	0	0	0	0	3.98699E-07	0	0	0	0	3.24733E-11	3.24733E-11	3.247E-05
396466.283768577.2	396466.28	3768577	0	0	0	0	0	0	4.78759E-07	0	0	0	0	3.89941E-11	3.89941E-11	3.899E-05
396566.283768577.2	396566.28	3768577	0	0	0	0	0	0	4.68876E-07	0	0	0	0	3.81891E-11	3.81891E-11	3.819E-05
396866.283768577.2	396866.28	3768577	0	0	0	0	0	0	6.0002E-07	0	0	0	0	4.88706E-11	4.88706E-11	4.887E-05
396966.283768577.2	396966.28	3768577	0	0	0	0	0	0	6.96704E-07	0	0	0	0	5.67454E-11	5.67454E-11	5.675E-05
397066.283768577.2	397066.28	3768577	0	0	0	0	0	0	8.61054E-07	0	0	0	0	7.01314E-11	7.01314E-11	7.013E-05
397166.283768577.2	397166.28	3768577	0	0	0	0	0	0	1.47425E-06	0	0	0	0	1.20075E-10	1.20075E-10	0.0001201
397266.283768577.2	397266.28	3768577	0	0	0	0	0	0	6.49954E-06	0	0	0	0	5.29376E-10	5.29376E-10	0.0005294
397366.283768577.2	397366.28	3768577	0	0	0	0	0	0	2.72239E-06	0	0	0	0	2.21734E-10	2.21734E-10	0.0002217
397466.283768577.2	397466.28	3768577	0	0	0	0	0	0	8.72314E-07	0	0	0	0	7.10485E-11	7.10485E-11	7.105E-05
397566.283768577.2	397566.28	3768577	0	0	0	0	0	0	5.22169E-07	0	0	0	0	4.25298E-11	4.25298E-11	4.253E-05
397666.283768577.2	397666.28	3768577	0	0	0	0	0	0	3.47143E-07	0	0	0	0	2.82742E-11	2.82742E-11	2.827E-05
397766.283768577.2	397766.28	3768577	0	0	0	0	0	0	2.47039E-07	0	0	0	0	2.01209E-11	2.01209E-11	2.012E-05
397866.283768577.2	397866.28	3768577	0	0	0	0	0	0	1.80373E-07	0	0	0	0	1.46911E-11	1.46911E-11	1.469E-05
396166.283768677.2	396166.28	3768677	0	0	0	0	0	0	5.75926E-07	0	0	0	0	4.69082E-11	4.69082E-11	4.691E-05
396266.283768677.2	396266.28	3768677	0	0	0	0	0	0	6.57528E-07	0	0	0	0	5.35546E-11	5.35546E-11	5.355E-05
396366.283768677.2	396366.28	3768677	0	0	0	0	0	0	6.38467E-07	0	0	0	0	5.20021E-11	5.20021E-11	5.2E-05
396466.283768677.2	396466.28	3768677	0	0	0	0	0	0	7.83836E-07	0	0	0	0	6.38421E-11	6.38421E-11	6.384E-05
396566.283768677.2	396566.28	3768677	0	0	0	0	0	0	7.92388E-07	0	0	0	0	6.45387E-11	6.45387E-11	6.454E-05
396666.283768677.2	396666.28	3768677	0	0	0	0	0	0	8.08991E-07	0	0	0	0	6.5891E-11	6.5891E-11	6.589E-05
396766.283768677.2	396766.28	3768677	0	0	0	0	0	0	8.39518E-07	0	0	0	0	6.83773E-11	6.83773E-11	6.838E-05
396866.283768677.2	396866.28	3768677	0	0	0	0	0	0	9.32354E-07	0	0	0	0	7.59386E-11	7.59386E-11	7.594E-05
396966.283768677.2	396966.28	3768677	0	0	0	0	0	0	1.02056E-06	0	0	0	0	8.3123E-11	8.3123E-11	8.312E-05
397066.283768677.2	397066.28	3768677	0	0	0	0	0	0	1.18384E-06	0	0	0	0	9.64219E-11	9.64219E-11	9.642E-05

Garvey Reservoir Rehab - Unmitigated Facility Electrical System			Demolition - 2025	Demolition - 2026	Site Preparation - 2025	te Preparation - 202	Grading - 2025	Grading - 2026	Infrastructure - 2025	nfrastructure - 2026	Paving - 2025	rchitectural Coating - 202	Child Risk			
Unique Identifier	X (UTM)	Y (UTM)	1900	1900	2025	1900	2026	1900	2026	1900	2026	1900	3rd Trimester	0<2	Total	per million
397166.283768677.2	397166.28	3768677	0	0	0	0	0	0	1.85806E-06	0	0	0	0	1.51336E-10	1.51336E-10	0.0001513
397366.283768677.2	397366.28	3768677	0	0	0	0	0	0	2.47083E-06	0	0	0	0	2.01245E-10	2.01245E-10	0.0002012
397466.283768677.2	397466.28	3768677	0	0	0	0	0	0	9.95508E-07	0	0	0	0	8.10824E-11	8.10824E-11	8.108E-05
397566.283768677.2	397566.28	3768677	0	0	0	0	0	0	5.42881E-07	0	0	0	0	4.42168E-11	4.42168E-11	4.422E-05
397666.283768677.2	397666.28	3768677	0	0	0	0	0	0	3.55687E-07	0	0	0	0	2.89701E-11	2.89701E-11	2.897E-05
397766.283768677.2	397766.28	3768677	0	0	0	0	0	0	2.62349E-07	0	0	0	0	2.13679E-11	2.13679E-11	2.137E-05
397866.283768677.2	397866.28	3768677	0	0	0	0	0	0	1.9264E-07	0	0	0	0	1.56902E-11	1.56902E-11	1.569E-05
396166.283768777.2	396166.28	3768777	0	0	0	0	0	0	1.67232E-06	0	0	0	0	1.36208E-10	1.36208E-10	0.0001362
396266.283768777.2	396266.28	3768777	0	0	0	0	0	0	2.07798E-06	0	0	0	0	1.69248E-10	1.69248E-10	0.0001692
396366.283768777.2	396366.28	3768777	0	0	0	0	0	0	1.52339E-06	0	0	0	0	1.24078E-10	1.24078E-10	0.0001241
396466.283768777.2	396466.28	3768777	0	0	0	0	0	0	1.99065E-06	0	0	0	0	1.62135E-10	1.62135E-10	0.0001621
396566.283768777.2	396566.28	3768777	0	0	0	0	0	0	2.13172E-06	0	0	0	0	1.73625E-10	1.73625E-10	0.0001736
396666.283768777.2	396666.28	3768777	0	0	0	0	0	0	2.13097E-06	0	0	0	0	1.73564E-10	1.73564E-10	0.0001736
396766.283768777.2	396766.28	3768777	0	0	0	0	0	0	2.20438E-06	0	0	0	0	1.79543E-10	1.79543E-10	0.0001795
396866.283768777.2	396866.28	3768777	0	0	0	0	0	0	2.29184E-06	0	0	0	0	1.86666E-10	1.86666E-10	0.0001867
396966.283768777.2	396966.28	3768777	0	0	0	0	0	0	2.34836E-06	0	0	0	0	1.9127E-10	1.9127E-10	0.0001913
397066.283768777.2	397066.28	3768777	0	0	0	0	0	0	2.52992E-06	0	0	0	0	2.06057E-10	2.06057E-10	0.0002061
397166.283768777.2	397166.28	3768777	0	0	0	0	0	0	3.04664E-06	0	0	0	0	2.48144E-10	2.48144E-10	0.0002481
397266.283768777.2	397266.28	3768777	0	0	0	0	0	0	9.71729E-06	0	0	0	0	7.91457E-10	7.91457E-10	0.0007915
397366.283768777.2	397366.28	3768777	0	0	0	0	0	0	3.37633E-06	0	0	0	0	2.74997E-10	2.74997E-10	0.000275
397466.283768777.2	397466.28	3768777	0	0	0	0	0	0	1.18753E-06	0	0	0	0	9.67223E-11	9.67223E-11	9.672E-05
397566.283768777.2	397566.28	3768777	0	0	0	0	0	0	6.36904E-07	0	0	0	0	5.18747E-11	5.18747E-11	5.187E-05
397666.283768777.2	397666.28	3768777	0	0	0	0	0	0	4.00561E-07	0	0	0	0	3.2625E-11	3.2625E-11	3.262E-05
397766.283768777.2	397766.28	3768777	0	0	0	0	0	0	2.74228E-07	0	0	0	0	2.23354E-11	2.23354E-11	2.234E-05
397866.283768777.2	397866.28	3768777	0	0	0	0	0	0	1.99621E-07	0	0	0	0	1.62588E-11	1.62588E-11	1.626E-05
396166.283768877.2	396166.28	3768877	0	0	0	0	0	0	6.73295E-06	0	0	0	0	5.48387E-10	5.48387E-10	0.0005484
396266.283768877.2	396266.28	3768877	0	0	0	0	0	0	8.6713E-06	0	0	0	0	7.06263E-10	7.06263E-10	0.0007063
396366.283768877.2	396366.28	3768877	0	0	0	0	0	0	8.49094E-06	0	0	0	0	6.91573E-10	6.91573E-10	0.0006916
396466.283768877.2	396466.28	3768877	0	0	0	0	0	0	9.35342E-06	0	0	0	0	7.6182E-10	7.6182E-10	0.0007618
396566.283768877.2	396566.28	3768877	0	0	0	0	0	0	8.82157E-06	0	0	0	0	7.18502E-10	7.18502E-10	0.0007185
396666.283768877.2	396666.28	3768877	0	0	0	0	0	0	9.58412E-06	0	0	0	0	7.8061E-10	7.8061E-10	0.0007806
396766.283768877.2	396766.28	3768877	0	0	0	0	0	0	9.27598E-06	0	0	0	0	7.55512E-10	7.55512E-10	0.0007555
396866.283768877.2	396866.28	3768877	0	0	0	0	0	0	9.01067E-06	0	0	0	0	7.33904E-10	7.33904E-10	0.0007339
396966.283768877.2	396966.28	3768877	0	0	0	0	0	0	8.6645E-06	0	0	0	0	7.05709E-10	7.05709E-10	0.0007057
397066.283768877.2	397066.28	3768877	0	0	0	0	0	0	8.7596E-06	0	0	0	0	7.13454E-10	7.13454E-10	0.0007135
397166.283768877.2	397166.28	3768877	0	0	0	0	0	0	9.00308E-06	0	0	0	0	7.33286E-10	7.33286E-10	0.0007333
397266.283768877.2	397266.28	3768877	0	0	0	0	0	0	9.45846E-06	0	0	0	0	7.70376E-10	7.70376E-10	0.0007704
397366.283768877.2	397366.28	3768877	0	0	0	0	0	0	4.65064E-06	0	0	0	0	3.78787E-10	3.78787E-10	0.0003788
397466.283768877.2	397466.28	3768877	0	0	0	0	0	0	1.2446E-06	0	0	0	0	1.0137E-10	1.0137E-10	0.0001014
397566.283768877.2	397566.28	3768877	0	0	0	0	0	0	6.36416E-07	0	0	0	0	5.1835E-11	5.1835E-11	5.183E-05
397666.283768877.2	397666.28	3768877	0	0	0	0	0	0	3.94762E-07	0	0	0	0	3.21527E-11	3.21527E-11	3.215E-05
397766.283768877.2	397766.28	3768877	0	0	0	0	0	0	2.72878E-07	0	0	0	0	2.22254E-11	2.22254E-11	2.223E-05
397866.283768877.2	397866.28	3768877	0	0	0	0	0	0	2.01962E-07	0	0	0	0	1.64495E-11	1.64495E-11	1.645E-05
3964253767739	396425	3767739	0	0	0	0	0	0	9.0768E-08	0	0	0	0	7.3929E-12	7.3929E-12	7.393E-06
3964753767739	396475	3767739	0	0	0	0	0	0	9.29366E-08	0	0	0	0	7.56953E-12	7.56953E-12	7.57E-06
3965253767739	396525	3767739	0	0	0	0	0	0	8.6624E-08	0	0	0	0	7.05538E-12	7.05538E-12	7.055E-06
3965753767739	396575	3767739	0	0	0	0	0	0	8.91282E-08	0	0	0	0	7.25934E-12	7.25934E-12	7.259E-06
3966253767739	396625	3767739	0	0	0	0	0	0	8.56001E-08	0	0	0	0	6.97198E-12	6.97198E-12	6.972E-06
3966753767739	396675	3767739	0	0	0	0	0	0	8.75942E-08	0	0	0	0	7.1344E-12	7.1344E-12	7.134E-06
3967253767739	396725	3767739	0	0	0	0	0	0	9.15443E-08	0	0	0	0	7.45613E-12	7.45613E-12	7.456E-06
3967753767739	396775	3767739	0	0	0	0	0	0	9.23137E-08	0	0	0	0	7.5188E-12	7.5188E-12	7.519E-06
3968253767739	396825	3767739	0	0	0	0	0	0	9.75158E-08	0	0	0	0	7.9425E-12	7.9425E-12	7.942E-06
3968753767739	396875	3767739	0	0	0	0	0	0	1.00356E-07	0	0	0	0	8.17382E-12	8.17382E-12	8.174E-06
3969253767739	396925	3767739	0	0	0	0	0	0	1.00079E-07	0	0	0	0	8.15125E-12	8.15125E-12	8.151E-06
3969753767739	396975	3767739	0	0	0	0	0	0	9.94142E-08	0	0	0	0	8.09712E-12	8.09712E-12	8.097E-06
3970253767739	397025	3767739	0	0	0	0	0	0	9.89956E-08	0	0	0	0	8.06303E-12	8.06303E-12	8.063E-06
3970753767739	397075	3767739	0	0	0	0	0	0	9.95011E-08	0	0	0	0	8.10419E-12	8.10419E-12	8.104E-06
3971253767739	397125	3767739	0	0	0	0	0	0	9.96226E-08	0	0	0	0	8.11409E-12	8.11409E-12	8.114E-06
3971753767739	397175	3767739	0	0	0	0	0	0	9.83126E-08	0	0	0	0	8.0074E-12	8.0074E-12	8.007E-06
3972253767739	397225	3767739	0	0	0	0	0	0	9.62264E-08	0	0	0	0	7.83748E-12	7.83748E-12	7.837E-06
3972753767739	397275	3767739	0	0	0	0	0	0	9.0753E-08	0	0	0	0	7.39168E-12	7.39168E-12	7.392E-06
3973253767739	397325	3767739	0	0	0	0	0	0	9.07893E-08	0	0	0	0	7.39464E-12	7.39464E-12	7.395E-06
3973753767739	397375	3767739	0	0	0	0	0	0	9.04884E-08	0	0	0	0	7.37013E-12	7.37013E-12	7.37E-06
3974253767739	397425	3767739	0	0	0	0	0	0	8.80578E-08	0	0	0	0	7.17216E-12	7.17216E-12	7.172E-06
3974753767739	397475	3767739	0	0	0	0	0	0	7.77992E-08	0	0	0	0	6.33661E-12	6.33661E-12	6.337E-06
3975253767739	397525	3767739	0	0	0	0	0	0	7.52087E-08	0	0	0	0	6.12562E-12	6.12562E-12	6.126E-06
3964253767789	396425	3767789	0	0	0	0	0	0	9.69611E-08	0	0	0	0	7.89732E-12	7.89732E-12	7.897E-06
3964753767789	396475	3767789	0	0	0	0	0	0	9.3413E-08	0	0	0	0	7.60833E-12	7.60833E-12	7.608E-06
3965253767789	396525	3767789	0	0	0	0	0	0	8.84707E-08	0	0	0	0	7.20579E-12	7.20579E-12	7.206E-06
3965753767789	396575	3767789	0	0	0	0	0	0	8.95415E-08	0	0	0	0	7.29301E-12	7.29301E-12	7.293E-06
3966253767789	396625	3767789	0	0	0	0	0	0	9.1899E-08	0	0	0	0	7.48502E-12	7.48502E-12	7.485E-06

Garvey Reservoir Rehab - Unmitigated Facility Electrical System			Demolition - 2025	Demolition - 2026	Site Preparation - 2025	te Preparation - 202	Grading - 2025	Grading - 2026	Infrastructure - 2025	nfrastructure - 2026	Paving - 2025	rchitectural Coating - 202	Child Risk			
Unique Identifier	X (UTM)	Y (UTM)	1900	1900	2025	1900	2026	1900	2026	1900	2026	1900	3rd Trimester	0<2	Total	per million
3966753767789	396675	3767789	0	0	0	0	0	0	9.46584E-08	0	0	0	0	7.70976E-12	7.70976E-12	7.71E-06
3967253767789	396725	3767789	0	0	0	0	0	0	1.02105E-07	0	0	0	0	8.31629E-12	8.31629E-12	8.316E-06
3967753767789	396775	3767789	0	0	0	0	0	0	1.04588E-07	0	0	0	0	8.51851E-12	8.51851E-12	8.519E-06
3968253767789	396825	3767789	0	0	0	0	0	0	1.09274E-07	0	0	0	0	8.90016E-12	8.90016E-12	8.9E-06
3968753767789	396875	3767789	0	0	0	0	0	0	1.10835E-07	0	0	0	0	9.02731E-12	9.02731E-12	9.027E-06
3969253767789	396925	3767789	0	0	0	0	0	0	1.10785E-07	0	0	0	0	9.02323E-12	9.02323E-12	9.023E-06
3969753767789	396975	3767789	0	0	0	0	0	0	1.09421E-07	0	0	0	0	8.91219E-12	8.91219E-12	8.912E-06
3970253767789	397025	3767789	0	0	0	0	0	0	1.0881E-07	0	0	0	0	8.86237E-12	8.86237E-12	8.862E-06
3970753767789	397075	3767789	0	0	0	0	0	0	1.09829E-07	0	0	0	0	8.94537E-12	8.94537E-12	8.945E-06
3971253767789	397125	3767789	0	0	0	0	0	0	1.10623E-07	0	0	0	0	9.01005E-12	9.01005E-12	9.01E-06
3971753767789	397175	3767789	0	0	0	0	0	0	1.10126E-07	0	0	0	0	8.96957E-12	8.96957E-12	8.97E-06
3972253767789	397225	3767789	0	0	0	0	0	0	1.08747E-07	0	0	0	0	8.85728E-12	8.85728E-12	8.857E-06
3972753767789	397275	3767789	0	0	0	0	0	0	1.02727E-07	0	0	0	0	8.36697E-12	8.36697E-12	8.367E-06
3973253767789	397325	3767789	0	0	0	0	0	0	1.00232E-07	0	0	0	0	8.16369E-12	8.16369E-12	8.164E-06
3973753767789	397375	3767789	0	0	0	0	0	0	1.00552E-07	0	0	0	0	8.18976E-12	8.18976E-12	8.19E-06
3974253767789	397425	3767789	0	0	0	0	0	0	9.8493E-08	0	0	0	0	8.02209E-12	8.02209E-12	8.022E-06
3974753767789	397475	3767789	0	0	0	0	0	0	8.58282E-08	0	0	0	0	6.99056E-12	6.99056E-12	6.991E-06
3975253767789	397525	3767789	0	0	0	0	0	0	8.32442E-08	0	0	0	0	6.7801E-12	6.7801E-12	6.78E-06
3964253767839	396425	3767839	0	0	0	0	0	0	1.0352E-07	0	0	0	0	8.43152E-12	8.43152E-12	8.432E-06
3964753767839	396475	3767839	0	0	0	0	0	0	1.02861E-07	0	0	0	0	8.37787E-12	8.37787E-12	8.378E-06
3965253767839	396525	3767839	0	0	0	0	0	0	9.32844E-08	0	0	0	0	7.59786E-12	7.59786E-12	7.598E-06
3965753767839	396575	3767839	0	0	0	0	0	0	9.5963E-08	0	0	0	0	7.81603E-12	7.81603E-12	7.816E-06
3966253767839	396625	3767839	0	0	0	0	0	0	9.88542E-08	0	0	0	0	8.05151E-12	8.05151E-12	8.052E-06
3966753767839	396675	3767839	0	0	0	0	0	0	1.10261E-07	0	0	0	0	8.98059E-12	8.98059E-12	8.981E-06
3967253767839	396725	3767839	0	0	0	0	0	0	1.15507E-07	0	0	0	0	9.40788E-12	9.40788E-12	9.408E-06
3967753767839	396775	3767839	0	0	0	0	0	0	1.18535E-07	0	0	0	0	9.65444E-12	9.65444E-12	9.654E-06
3968253767839	396825	3767839	0	0	0	0	0	0	1.21489E-07	0	0	0	0	9.89509E-12	9.89509E-12	9.895E-06
3968753767839	396875	3767839	0	0	0	0	0	0	1.22916E-07	0	0	0	0	1.00113E-11	1.00113E-11	1.001E-05
3969253767839	396925	3767839	0	0	0	0	0	0	1.23286E-07	0	0	0	0	1.00415E-11	1.00415E-11	1.004E-05
3969753767839	396975	3767839	0	0	0	0	0	0	1.22016E-07	0	0	0	0	9.93802E-12	9.93802E-12	9.938E-06
3970253767839	397025	3767839	0	0	0	0	0	0	1.21042E-07	0	0	0	0	9.8587E-12	9.8587E-12	9.859E-06
3970753767839	397075	3767839	0	0	0	0	0	0	1.23654E-07	0	0	0	0	1.00714E-11	1.00714E-11	1.007E-05
3971253767839	397125	3767839	0	0	0	0	0	0	1.25927E-07	0	0	0	0	1.02566E-11	1.02566E-11	1.026E-05
3971753767839	397175	3767839	0	0	0	0	0	0	1.24263E-07	0	0	0	0	1.0121E-11	1.0121E-11	1.012E-05
3972253767839	397225	3767839	0	0	0	0	0	0	1.19468E-07	0	0	0	0	9.73046E-12	9.73046E-12	9.73E-06
3972753767839	397275	3767839	0	0	0	0	0	0	1.13171E-07	0	0	0	0	9.21761E-12	9.21761E-12	9.218E-06
3973253767839	397325	3767839	0	0	0	0	0	0	1.07894E-07	0	0	0	0	8.78776E-12	8.78776E-12	8.788E-06
3973753767839	397375	3767839	0	0	0	0	0	0	1.12239E-07	0	0	0	0	9.14168E-12	9.14168E-12	9.142E-06
3974753767839	397475	3767839	0	0	0	0	0	0	1.05798E-07	0	0	0	0	8.61705E-12	8.61705E-12	8.617E-06
3975253767839	397525	3767839	0	0	0	0	0	0	9.04213E-08	0	0	0	0	7.36466E-12	7.36466E-12	7.365E-06
3964253767889	396425	3767889	0	0	0	0	0	0	1.09465E-07	0	0	0	0	8.91571E-12	8.91571E-12	8.916E-06
3964753767889	396475	3767889	0	0	0	0	0	0	9.73195E-08	0	0	0	0	7.92651E-12	7.92651E-12	7.927E-06
3965253767889	396525	3767889	0	0	0	0	0	0	9.98772E-08	0	0	0	0	8.13483E-12	8.13483E-12	8.135E-06
3965753767889	396575	3767889	0	0	0	0	0	0	1.04401E-07	0	0	0	0	8.50324E-12	8.50324E-12	8.503E-06
3974753767889	397475	3767889	0	0	0	0	0	0	1.14784E-07	0	0	0	0	9.34897E-12	9.34897E-12	9.349E-06
3975253767889	397525	3767889	0	0	0	0	0	0	9.97465E-08	0	0	0	0	8.12419E-12	8.12419E-12	8.124E-06
3964253767939	396425	3767939	0	0	0	0	0	0	1.16207E-07	0	0	0	0	9.46488E-12	9.46488E-12	9.465E-06
3964753767939	396475	3767939	0	0	0	0	0	0	1.04453E-07	0	0	0	0	8.50751E-12	8.50751E-12	8.508E-06
3965253767939	396525	3767939	0	0	0	0	0	0	1.08194E-07	0	0	0	0	8.81224E-12	8.81224E-12	8.812E-06
3974753767939	397475	3767939	0	0	0	0	0	0	1.21961E-07	0	0	0	0	9.93355E-12	9.93355E-12	9.934E-06
3975253767939	397525	3767939	0	0	0	0	0	0	1.1149E-07	0	0	0	0	9.08064E-12	9.08064E-12	9.081E-06
3964253767989	396425	3767989	0	0	0	0	0	0	1.14007E-07	0	0	0	0	9.28566E-12	9.28566E-12	9.286E-06
3964753767989	396475	3767989	0	0	0	0	0	0	1.13513E-07	0	0	0	0	9.24546E-12	9.24546E-12	9.245E-06
3974753767989	397475	3767989	0	0	0	0	0	0	1.40162E-07	0	0	0	0	1.14159E-11	1.14159E-11	1.142E-05
3975253767989	397525	3767989	0	0	0	0	0	0	1.27033E-07	0	0	0	0	1.03466E-11	1.03466E-11	1.035E-05
3964253768039	396425	3768039	0	0	0	0	0	0	1.22905E-07	0	0	0	0	1.00104E-11	1.00104E-11	1.001E-05
3964753768039	396475	3768039	0	0	0	0	0	0	1.26995E-07	0	0	0	0	1.03435E-11	1.03435E-11	1.034E-05
3974753768039	397475	3768039	0	0	0	0	0	0	1.87124E-07	0	0	0	0	1.52409E-11	1.52409E-11	1.524E-05
3975253768039	397525	3768039	0	0	0	0	0	0	1.75103E-07	0	0	0	0	1.42619E-11	1.42619E-11	1.426E-05
3964253768089	396425	3768089	0	0	0	0	0	0	1.35536E-07	0	0	0	0	1.10392E-11	1.10392E-11	1.104E-05
3964753768089	396475	3768089	0	0	0	0	0	0	1.42454E-07	0	0	0	0	1.16026E-11	1.16026E-11	1.16E-05
3974753768089	397475	3768089	0	0	0	0	0	0	2.51867E-07	0	0	0	0	2.05142E-11	2.05142E-11	2.051E-05
3975253768089	397525	3768089	0	0	0	0	0	0	2.31961E-07	0	0	0	0	1.88928E-11	1.88928E-11	1.889E-05
3964253768139	396425	3768139	0	0	0	0	0	0	1.6877E-07	0	0	0	0	1.3746E-11	1.3746E-11	1.375E-05
3964753768139	396475	3768139	0	0	0	0	0	0	1.55458E-07	0	0	0	0	1.26618E-11	1.26618E-11	1.266E-05
3974253768139	397425	3768139	0	0	0	0	0	0	5.34334E-07	0	0	0	0	4.35206E-11	4.35206E-11	4.352E-05
3974753768139	397475	3768139	0	0	0	0	0	0	3.87108E-07	0	0	0	0	3.15292E-11	3.15292E-11	3.153E-05
3975253768139	397525	3768139	0	0	0	0	0	0	2.92081E-07	0	0	0	0	2.37895E-11	2.37895E-11	2.379E-05
3964253768189	396425	3768189	0	0	0	0	0	0	1.81825E-07	0	0	0	0	1.48093E-11	1.48093E-11	1.481E-05
3964753768189	396475	3768189	0	0	0	0	0	0	1.70179E-07	0	0	0	0	1.38608E-11	1.38608E-11	1.386E-05
3973753768189	397375	3768189	0	0	0	0	0	0	3.16724E-06	0	0	0	0	2.57966E-10	2.57966E-10	0.000258

Garvey Reservoir Rehab - Unmitigated Facility Electrical System			Demolition - 2025	Demolition - 2026	Site Preparation - 2025	ite Preparation - 202	Grading - 2025	Grading - 2026	Infrastructure - 2025	nfrastructure - 2026	Paving - 2025	rchitectural Coating - 202	Child Risk			
Unique Identifier	X (UTM)	Y (UTM)	1900	1900	2025	1900	2026	1900	2026	1900	2026	1900	3rd Trimester	0<2	Total	per million
3974253768189	397425	3768189	0	0	0	0	0	0	9.14856E-07	0	0	0	0	7.45134E-11	7.45134E-11	7.451E-05
3974753768189	397475	3768189	0	0	0	0	0	0	5.24195E-07	0	0	0	0	4.26948E-11	4.26948E-11	4.269E-05
3975253768189	397525	3768189	0	0	0	0	0	0	3.60921E-07	0	0	0	0	2.93964E-11	2.93964E-11	2.94E-05
3964253768239	396425	3768239	0	0	0	0	0	0	1.96791E-07	0	0	0	0	1.60283E-11	1.60283E-11	1.603E-05
3964753768239	396475	3768239	0	0	0	0	0	0	1.88175E-07	0	0	0	0	1.53265E-11	1.53265E-11	1.533E-05
3973753768239	397375	3768239	0	0	0	0	0	0	4.61395E-06	0	0	0	0	3.75798E-10	3.75798E-10	0.0003758
3974253768239	397425	3768239	0	0	0	0	0	0	1.17331E-06	0	0	0	0	9.55639E-11	9.55639E-11	9.556E-05
3974753768239	397475	3768239	0	0	0	0	0	0	6.32611E-07	0	0	0	0	5.15251E-11	5.15251E-11	5.153E-05
3975253768239	397525	3768239	0	0	0	0	0	0	4.29129E-07	0	0	0	0	3.49518E-11	3.49518E-11	3.495E-05
3964253768289	396425	3768289	0	0	0	0	0	0	2.10651E-07	0	0	0	0	1.71572E-11	1.71572E-11	1.716E-05
3964753768289	396475	3768289	0	0	0	0	0	0	2.09652E-07	0	0	0	0	1.70758E-11	1.70758E-11	1.708E-05
3973253768289	397325	3768289	0	0	0	0	0	0	1.22233E-05	0	0	0	0	9.9557E-10	9.9557E-10	0.0009956
3973753768289	397375	3768289	0	0	0	0	0	0	3.23571E-06	0	0	0	0	2.63543E-10	2.63543E-10	0.0002635
3974253768289	397425	3768289	0	0	0	0	0	0	1.42608E-06	0	0	0	0	1.16152E-10	1.16152E-10	0.0001162
3974753768289	397475	3768289	0	0	0	0	0	0	7.86182E-07	0	0	0	0	6.40332E-11	6.40332E-11	6.403E-05
3975253768289	397525	3768289	0	0	0	0	0	0	5.10114E-07	0	0	0	0	4.15479E-11	4.15479E-11	4.155E-05
3964253768339	396425	3768339	0	0	0	0	0	0	2.38691E-07	0	0	0	0	1.9441E-11	1.9441E-11	1.944E-05
3964753768339	396475	3768339	0	0	0	0	0	0	2.3691E-07	0	0	0	0	1.92959E-11	1.92959E-11	1.93E-05
3965253768339	396525	3768339	0	0	0	0	0	0	2.52547E-07	0	0	0	0	2.05695E-11	2.05695E-11	2.057E-05
3972753768339	397275	3768339	0	0	0	0	0	0	9.93064E-06	0	0	0	0	8.08834E-10	8.08834E-10	0.0008088
3973253768339	397325	3768339	0	0	0	0	0	0	7.32089E-06	0	0	0	0	5.96274E-10	5.96274E-10	0.0005963
3973753768339	397375	3768339	0	0	0	0	0	0	2.6966E-06	0	0	0	0	2.19633E-10	2.19633E-10	0.0002196
3974253768339	397425	3768339	0	0	0	0	0	0	1.41789E-06	0	0	0	0	1.15484E-10	1.15484E-10	0.0001155
3974753768339	397475	3768339	0	0	0	0	0	0	8.52659E-07	0	0	0	0	6.94477E-11	6.94477E-11	6.945E-05
3975253768339	397525	3768339	0	0	0	0	0	0	5.66484E-07	0	0	0	0	4.61391E-11	4.61391E-11	4.614E-05
3964253768389	396425	3768389	0	0	0	0	0	0	2.65247E-07	0	0	0	0	2.16039E-11	2.16039E-11	2.16E-05
3964753768389	396475	3768389	0	0	0	0	0	0	2.69992E-07	0	0	0	0	2.19904E-11	2.19904E-11	2.199E-05
3965253768389	396525	3768389	0	0	0	0	0	0	2.82988E-07	0	0	0	0	2.30489E-11	2.30489E-11	2.305E-05
3972253768389	397225	3768389	0	0	0	0	0	0	2.38731E-06	0	0	0	0	1.94442E-10	1.94442E-10	0.0001944
3972753768389	397275	3768389	0	0	0	0	0	0	9.45567E-06	0	0	0	0	7.70149E-10	7.70149E-10	0.0007701
3973253768389	397325	3768389	0	0	0	0	0	0	7.32333E-06	0	0	0	0	5.96473E-10	5.96473E-10	0.0005965
3973753768389	397375	3768389	0	0	0	0	0	0	2.59588E-06	0	0	0	0	2.1143E-10	2.1143E-10	0.0002114
3974253768389	397425	3768389	0	0	0	0	0	0	1.42028E-06	0	0	0	0	1.1568E-10	1.1568E-10	0.0001157
3974753768389	397475	3768389	0	0	0	0	0	0	8.98111E-07	0	0	0	0	7.31496E-11	7.31496E-11	7.315E-05
3975253768389	397525	3768389	0	0	0	0	0	0	6.16887E-07	0	0	0	0	5.02444E-11	5.02444E-11	5.024E-05
3964253768439	396425	3768439	0	0	0	0	0	0	3.01042E-07	0	0	0	0	2.45194E-11	2.45194E-11	2.452E-05
3964753768439	396475	3768439	0	0	0	0	0	0	3.10017E-07	0	0	0	0	2.52504E-11	2.52504E-11	2.525E-05
3965253768439	396525	3768439	0	0	0	0	0	0	3.21193E-07	0	0	0	0	2.61606E-11	2.61606E-11	2.616E-05
3971753768439	397175	3768439	0	0	0	0	0	0	1.28612E-06	0	0	0	0	1.04752E-10	1.04752E-10	0.0001048
3972253768439	397225	3768439	0	0	0	0	0	0	2.50443E-06	0	0	0	0	2.03981E-10	2.03981E-10	0.000204
3972753768439	397275	3768439	0	0	0	0	0	0	9.50244E-06	0	0	0	0	7.73958E-10	7.73958E-10	0.000774
3973253768439	397325	3768439	0	0	0	0	0	0	7.1501E-06	0	0	0	0	5.82364E-10	5.82364E-10	0.0005824
3973753768439	397375	3768439	0	0	0	0	0	0	2.39955E-06	0	0	0	0	1.95439E-10	1.95439E-10	0.0001954
3974253768439	397425	3768439	0	0	0	0	0	0	1.31306E-06	0	0	0	0	1.06947E-10	1.06947E-10	0.0001069
3974753768439	397475	3768439	0	0	0	0	0	0	9.29808E-07	0	0	0	0	7.57312E-11	7.57312E-11	7.573E-05
3975253768439	397525	3768439	0	0	0	0	0	0	6.52985E-07	0	0	0	0	5.31845E-11	5.31845E-11	5.318E-05
3964253768489	396425	3768489	0	0	0	0	0	0	3.43383E-07	0	0	0	0	2.7968E-11	2.7968E-11	2.797E-05
3964753768489	396475	3768489	0	0	0	0	0	0	3.58047E-07	0	0	0	0	2.91623E-11	2.91623E-11	2.916E-05
3965253768489	396525	3768489	0	0	0	0	0	0	3.7197E-07	0	0	0	0	3.02964E-11	3.02964E-11	3.03E-05
3970753768489	397075	3768489	0	0	0	0	0	0	7.32546E-07	0	0	0	0	5.96647E-11	5.96647E-11	5.966E-05
3971253768489	397125	3768489	0	0	0	0	0	0	9.30641E-07	0	0	0	0	7.57992E-11	7.57992E-11	7.58E-05
3971753768489	397175	3768489	0	0	0	0	0	0	1.34596E-06	0	0	0	0	1.09626E-10	1.09626E-10	0.0001096
3972253768489	397225	3768489	0	0	0	0	0	0	2.48988E-06	0	0	0	0	2.02796E-10	2.02796E-10	0.0002028
3972753768489	397275	3768489	0	0	0	0	0	0	9.32927E-06	0	0	0	0	7.59853E-10	7.59853E-10	0.0007599
3973253768489	397325	3768489	0	0	0	0	0	0	6.17087E-06	0	0	0	0	5.02607E-10	5.02607E-10	0.0005026
3973753768489	397375	3768489	0	0	0	0	0	0	2.36365E-06	0	0	0	0	1.92516E-10	1.92516E-10	0.0001925
3974253768489	397425	3768489	0	0	0	0	0	0	1.30462E-06	0	0	0	0	1.06259E-10	1.06259E-10	0.0001063
3974753768489	397475	3768489	0	0	0	0	0	0	8.13122E-07	0	0	0	0	6.62274E-11	6.62274E-11	6.623E-05
3975253768489	397525	3768489	0	0	0	0	0	0	5.89061E-07	0	0	0	0	4.7978E-11	4.7978E-11	4.798E-05
3964253768539	396425	3768539	0	0	0	0	0	0	3.99334E-07	0	0	0	0	3.2525E-11	3.2525E-11	3.253E-05
3964753768539	396475	3768539	0	0	0	0	0	0	4.21103E-07	0	0	0	0	3.42981E-11	3.42981E-11	3.43E-05
3965253768539	396525	3768539	0	0	0	0	0	0	4.3514E-07	0	0	0	0	3.54414E-11	3.54414E-11	3.544E-05
3965753768539	396575	3768539	0	0	0	0	0	0	4.18776E-07	0	0	0	0	3.41086E-11	3.41086E-11	3.411E-05
3970253768539	397025	3768539	0	0	0	0	0	0	6.92943E-07	0	0	0	0	5.6439E-11	5.6439E-11	5.644E-05
3970753768539	397075	3768539	0	0	0	0	0	0	8.10826E-07	0	0	0	0	6.60404E-11	6.60404E-11	6.604E-05
3971253768539	397125	3768539	0	0	0	0	0	0	1.0188E-06	0	0	0	0	8.29797E-11	8.29797E-11	8.298E-05
3971753768539	397175	3768539	0	0	0	0	0	0	1.45466E-06	0	0	0	0	1.1848E-10	1.1848E-10	0.0001185
3972253768539	397225	3768539	0	0	0	0	0	0	2.55131E-06	0	0	0	0	2.078E-10	2.078E-10	0.0002078
3972753768539	397275	3768539	0	0	0	0	0	0	8.49806E-06	0	0	0	0	6.92152E-10	6.92152E-10	0.0006922
3973253768539	397325	3768539	0	0	0	0	0	0	5.95109E-06	0	0	0	0	4.84706E-10	4.84706E-10	0.0004847
3973753768539	397375	3768539	0	0	0	0	0	0	2.38068E-06	0	0	0	0	1.93902E-10	1.93902E-10	0.0001939

Garvey Reservoir Rehab - Unmitigated Facility Electrical System			Demolition - 2025	Demolition - 2026	Site Preparation - 2025	ite Preparation - 202	Grading - 2025	Grading - 2026	Infrastructure - 2025	nfrastructure - 2026	Paving - 2025	rchitectural Coating - 202	Child Risk			
Unique Identifier	X (UTM)	Y (UTM)	1900	1900	2025	1900	2026	1900	2026	1900	2026	1900	3rd Trimester	0<2	Total	per million
3974253768539	397425	3768539	0	0	0	0	0	0	1.27506E-06	0	0	0	0	1.03851E-10	1.03851E-10	0.0001039
3974753768539	397475	3768539	0	0	0	0	0	0	8.22485E-07	0	0	0	0	6.699E-11	6.699E-11	6.699E-05
3975253768539	397525	3768539	0	0	0	0	0	0	5.85696E-07	0	0	0	0	4.7704E-11	4.7704E-11	4.77E-05
3964253768589	396425	3768589	0	0	0	0	0	0	4.66023E-07	0	0	0	0	3.79568E-11	3.79568E-11	3.796E-05
3964753768589	396475	3768589	0	0	0	0	0	0	5.05701E-07	0	0	0	0	4.11885E-11	4.11885E-11	4.119E-05
3965253768589	396525	3768589	0	0	0	0	0	0	5.03894E-07	0	0	0	0	4.10413E-11	4.10413E-11	4.104E-05
3965753768589	396575	3768589	0	0	0	0	0	0	4.86158E-07	0	0	0	0	3.95967E-11	3.95967E-11	3.96E-05
3966253768589	396625	3768589	0	0	0	0	0	0	4.80616E-07	0	0	0	0	3.91454E-11	3.91454E-11	3.915E-05
3968253768589	396825	3768589	0	0	0	0	0	0	5.92152E-07	0	0	0	0	4.82298E-11	4.82298E-11	4.823E-05
3968753768589	396875	3768589	0	0	0	0	0	0	6.27671E-07	0	0	0	0	5.11227E-11	5.11227E-11	5.112E-05
3969253768589	396925	3768589	0	0	0	0	0	0	6.81768E-07	0	0	0	0	5.55289E-11	5.55289E-11	5.553E-05
3969753768589	396975	3768589	0	0	0	0	0	0	7.31863E-07	0	0	0	0	5.9609E-11	5.9609E-11	5.961E-05
3970253768589	397025	3768589	0	0	0	0	0	0	8.05111E-07	0	0	0	0	6.55749E-11	6.55749E-11	6.557E-05
3970753768589	397075	3768589	0	0	0	0	0	0	9.14589E-07	0	0	0	0	7.44917E-11	7.44917E-11	7.449E-05
3971253768589	397125	3768589	0	0	0	0	0	0	1.14892E-06	0	0	0	0	9.35779E-11	9.35779E-11	9.358E-05
3971753768589	397175	3768589	0	0	0	0	0	0	1.62855E-06	0	0	0	0	1.32643E-10	1.32643E-10	0.0001326
3972253768589	397225	3768589	0	0	0	0	0	0	2.84832E-06	0	0	0	0	2.3199E-10	2.3199E-10	0.000232
3972753768589	397275	3768589	0	0	0	0	0	0	9.07695E-06	0	0	0	0	7.39302E-10	7.39302E-10	0.0007393
3973253768589	397325	3768589	0	0	0	0	0	0	5.91009E-06	0	0	0	0	4.81367E-10	4.81367E-10	0.0004814
3973753768589	397375	3768589	0	0	0	0	0	0	2.38013E-06	0	0	0	0	1.93858E-10	1.93858E-10	0.0001939
3974253768589	397425	3768589	0	0	0	0	0	0	1.23782E-06	0	0	0	0	1.00818E-10	1.00818E-10	0.0001008
3974753768589	397475	3768589	0	0	0	0	0	0	8.16547E-07	0	0	0	0	6.65064E-11	6.65064E-11	6.651E-05
3975253768589	397525	3768589	0	0	0	0	0	0	5.90625E-07	0	0	0	0	4.81054E-11	4.81054E-11	4.811E-05
3964253768639	396425	3768639	0	0	0	0	0	0	5.61717E-07	0	0	0	0	4.57509E-11	4.57509E-11	4.575E-05
3964753768639	396475	3768639	0	0	0	0	0	0	6.36065E-07	0	0	0	0	5.18064E-11	5.18064E-11	5.181E-05
3965253768639	396525	3768639	0	0	0	0	0	0	5.97717E-07	0	0	0	0	4.8683E-11	4.8683E-11	4.868E-05
3965753768639	396575	3768639	0	0	0	0	0	0	6.01335E-07	0	0	0	0	4.89777E-11	4.89777E-11	4.898E-05
3966253768639	396625	3768639	0	0	0	0	0	0	6.1207E-07	0	0	0	0	4.9852E-11	4.9852E-11	4.985E-05
3966753768639	396675	3768639	0	0	0	0	0	0	6.24843E-07	0	0	0	0	5.08924E-11	5.08924E-11	5.089E-05
3967253768639	396725	3768639	0	0	0	0	0	0	6.44125E-07	0	0	0	0	5.24629E-11	5.24629E-11	5.246E-05
3967753768639	396775	3768639	0	0	0	0	0	0	6.79063E-07	0	0	0	0	5.53085E-11	5.53085E-11	5.531E-05
3968253768639	396825	3768639	0	0	0	0	0	0	7.12615E-07	0	0	0	0	5.80413E-11	5.80413E-11	5.804E-05
3968753768639	396875	3768639	0	0	0	0	0	0	7.64108E-07	0	0	0	0	6.22353E-11	6.22353E-11	6.224E-05
3969253768639	396925	3768639	0	0	0	0	0	0	8.22071E-07	0	0	0	0	6.69563E-11	6.69563E-11	6.696E-05
3969753768639	396975	3768639	0	0	0	0	0	0	8.73162E-07	0	0	0	0	7.11176E-11	7.11176E-11	7.112E-05
3970253768639	397025	3768639	0	0	0	0	0	0	9.42057E-07	0	0	0	0	7.6729E-11	7.6729E-11	7.673E-05
3970753768639	397075	3768639	0	0	0	0	0	0	1.04547E-06	0	0	0	0	8.51515E-11	8.51515E-11	8.515E-05
3971253768639	397125	3768639	0	0	0	0	0	0	1.2571E-06	0	0	0	0	1.02389E-10	1.02389E-10	0.0001024
3971753768639	397175	3768639	0	0	0	0	0	0	1.8391E-06	0	0	0	0	1.49792E-10	1.49792E-10	0.0001498
3972253768639	397225	3768639	0	0	0	0	0	0	3.62446E-06	0	0	0	0	2.95206E-10	2.95206E-10	0.0002952
3972753768639	397275	3768639	0	0	0	0	0	0	1.26254E-05	0	0	0	0	1.02831E-09	1.02831E-09	0.0010283
3973253768639	397325	3768639	0	0	0	0	0	0	5.3237E-06	0	0	0	0	4.33606E-10	4.33606E-10	0.0004336
3973753768639	397375	3768639	0	0	0	0	0	0	2.34555E-06	0	0	0	0	1.91041E-10	1.91041E-10	0.000191
3974253768639	397425	3768639	0	0	0	0	0	0	1.36722E-06	0	0	0	0	1.11358E-10	1.11358E-10	0.0001114
3974753768639	397475	3768639	0	0	0	0	0	0	8.11605E-07	0	0	0	0	6.61039E-11	6.61039E-11	6.61E-05
3975253768639	397525	3768639	0	0	0	0	0	0	5.96383E-07	0	0	0	0	4.85744E-11	4.85744E-11	4.857E-05
3964253768689	396425	3768689	0	0	0	0	0	0	7.24038E-07	0	0	0	0	5.89717E-11	5.89717E-11	5.897E-05
3964753768689	396475	3768689	0	0	0	0	0	0	8.58881E-07	0	0	0	0	6.99544E-11	6.99544E-11	6.995E-05
3965253768689	396525	3768689	0	0	0	0	0	0	8.91452E-07	0	0	0	0	7.26072E-11	7.26072E-11	7.261E-05
3965753768689	396575	3768689	0	0	0	0	0	0	8.76162E-07	0	0	0	0	7.13619E-11	7.13619E-11	7.136E-05
3966253768689	396625	3768689	0	0	0	0	0	0	8.86462E-07	0	0	0	0	7.22008E-11	7.22008E-11	7.22E-05
3966753768689	396675	3768689	0	0	0	0	0	0	8.80542E-07	0	0	0	0	7.17187E-11	7.17187E-11	7.172E-05
3967253768689	396725	3768689	0	0	0	0	0	0	8.95219E-07	0	0	0	0	7.29141E-11	7.29141E-11	7.291E-05
3967753768689	396775	3768689	0	0	0	0	0	0	9.08079E-07	0	0	0	0	7.39615E-11	7.39615E-11	7.396E-05
3968253768689	396825	3768689	0	0	0	0	0	0	9.5723E-07	0	0	0	0	7.79647E-11	7.79647E-11	7.796E-05
3968753768689	396875	3768689	0	0	0	0	0	0	1.00822E-06	0	0	0	0	8.2118E-11	8.2118E-11	8.212E-05
3969253768689	396925	3768689	0	0	0	0	0	0	1.05176E-06	0	0	0	0	8.5664E-11	8.5664E-11	8.566E-05
3969753768689	396975	3768689	0	0	0	0	0	0	1.09665E-06	0	0	0	0	8.93203E-11	8.93203E-11	8.932E-05
3970253768689	397025	3768689	0	0	0	0	0	0	1.15927E-06	0	0	0	0	9.44209E-11	9.44209E-11	9.442E-05
3970753768689	397075	3768689	0	0	0	0	0	0	1.27162E-06	0	0	0	0	1.03572E-10	1.03572E-10	0.0001036
3971253768689	397125	3768689	0	0	0	0	0	0	1.48498E-06	0	0	0	0	1.20949E-10	1.20949E-10	0.0001209
3971753768689	397175	3768689	0	0	0	0	0	0	2.07075E-06	0	0	0	0	1.68659E-10	1.68659E-10	0.0001687
3972253768689	397225	3768689	0	0	0	0	0	0	4.69595E-06	0	0	0	0	3.82477E-10	3.82477E-10	0.0003825
3972753768689	397275	3768689	0	0	0	0	0	0	1.28985E-05	0	0	0	0	1.05056E-09	1.05056E-09	0.0010506
3973253768689	397325	3768689	0	0	0	0	0	0	4.31696E-06	0	0	0	0	3.51609E-10	3.51609E-10	0.0003516
3973753768689	397375	3768689	0	0	0	0	0	0	2.18547E-06	0	0	0	0	1.78003E-10	1.78003E-10	0.000178
3974253768689	397425	3768689	0	0	0	0	0	0	1.36516E-06	0	0	0	0	1.1119E-10	1.1119E-10	0.0001112
3974753768689	397475	3768689	0	0	0	0	0	0	9.31649E-07	0	0	0	0	7.58813E-11	7.58813E-11	7.588E-05
3975253768689	397525	3768689	0	0	0	0	0	0	6.76177E-07	0	0	0	0	5.50735E-11	5.50735E-11	5.507E-05

Garvey Reservoir Rehab - Unmitigated Facility Electrical System

Maximum Individual Non-Cancer Impact Calculations - Sensitive Receptors (Maximum Impacted Senior Residential Receptor) (IMPACT AT ALL OTHER LOCATIONS ON THE PROJECT SITE WOULD BE LESS THAN SHOWN)

Maximum Non-cancer Chronic Hazards / Toxicological Endpoints*

Receptor Group	Pollutant	CREL[1]	CONC	WFrac	$CONC_{WF}$	HI		ALIM	BN	CVS	DEV	ENDC	EYE	HEM	IMMUN	KIDN	NS	REPRO	RESP	SK
Project:																				
MEI - Max	DPM	5.00E+00	3.91E-01	1.00E+00	3.91E-01	0.078		-	-	-	-	-	-	-	-	-	-	-	7.82E-02	-
							Total Risk				-			-				-	0.078	
							Threshold				1.00			1.00				1.00	1.00	
							Over?				NO			NO				NO	NO	

Notes:

1. California Air Resources Board, "Consolidated Table of OEHHA/ARB Approved Risk Assessment Health Values," "OEHHA/ARB Approved Chronic Reference Exposure Levels and Target Organs," "OEHHA/ARB Approved Acute Reference Exposure Levels and Target Organs," and "OEHHA/ARB Approved 8-Hour Reference Exposure Levels and Target Organs," http://www.arb.ca.gov/toxics/healthval/healthval.htm. Tables last updated: May 8, 2018. Downloaded: 08/14/18.

Source: ESA, 2020

Where:

$CONC_{WF}$	Pollutant Concentration ($\mu g/m^3$) multiplied by the weight fraction
CREL	Chronic Reference Exposure Level
HI	Hazard Index
MEI	Maximally Exposed Individual
WFrac	Weight fraction of speciated component

* Key to Toxicological Endpoints

ALIM	Alimentary Tract	EYE	Eye	NS	Nervous System
BN	Bone	HEM	Hematologic System	REPRO	Reproductive System
CVS	Cardiovascular System	IMMUN	Immune System	RESP	Respiratory System
DEV	Developmental System	KIDN	Kidney	SK	Skin
ENDC	Endocrine System				

Garvey Reservoir Rehab - Mitigated Facility Electrical System

Cancer Risk Summary & Maximum Annual GLC for Chronic Calculations

Cancer Risk Summary

Max Risk: 1.215106

XY	X	Y	Offroad Risk	Haul Risk	Total Risk
7449041451	574490	4145130	0.002181575	3.93056E-06	0.002186
7448041451	574480	4145140	0.00241458	4.01967E-06	0.002419
7449041451	574490	4145140	0.002761586	4.18315E-06	0.002766
7449041451	574490	4145150	0.00312583	4.29214E-06	0.00313
7450041451	574500	4145150	0.003574602	4.70536E-06	0.003579
7446041451	574460	4145160	0.003974437	4.44866E-06	0.003979
7449041451	574490	4145160	0.004325335	4.43122E-06	0.00433
7450041451	574500	4145160	0.004701814	4.4351E-06	0.004706
7451041451	574510	4145160	0.005161151	4.49378E-06	0.005166
7446041451	574460	4145170	0.00545922	4.38046E-06	0.005464
7447041451	574470	4145170	0.005546527	4.32054E-06	0.005551
7448041451	574480	4145170	0.005464781	4.32575E-06	0.005469
7449041451	574490	4145170	0.005463113	4.12856E-06	0.005467
7450041451	574500	4145170	0.005346888	3.71677E-06	0.005351
7451041451	574510	4145170	0.005064946	3.65594E-06	0.005069
7452041451	574520	4145170	0.004705706	3.54862E-06	0.004709
7446041451	574460	4145180	0.004213559	3.66231E-06	0.004217
7447041451	574470	4145180	0.003785363	3.48837E-06	0.003789
7448041451	574480	4145180	0.002302804	4.52319E-06	0.002307
7449041451	574490	4145180	0.002540814	4.41963E-06	0.002545
7450041451	574500	4145180	0.002954552	4.65621E-06	0.002959
7451041451	574510	4145180	0.003413333	5.09972E-06	0.003418
7452041451	574520	4145180	0.003938846	5.16901E-06	0.003944
7453041451	574530	4145180	0.004497169	5.01892E-06	0.004502
7445041451	574450	4145190	0.005092195	5.05818E-06	0.005097
7446041451	574460	4145190	0.005729484	5.08772E-06	0.005735
7447041451	574470	4145190	0.006485778	5.16345E-06	0.006491
7448041451	574480	4145190	0.007068569	5.06423E-06	0.007074
7449041451	574490	4145190	0.007337165	4.90473E-06	0.007342
7450041451	574500	4145190	0.007309916	4.92094E-06	0.007315
7451041451	574510	4145190	0.007202589	4.7729E-06	0.007207
7452041451	574520	4145190	0.007014071	4.30496E-06	0.007018
7444041452	574440	4145200	0.006549173	4.08264E-06	0.006553
7445041452	574450	4145200	0.00593524	3.9931E-06	0.005939
7446041452	574460	4145200	0.005264029	3.89826E-06	0.005268
7447041452	574470	4145200	0.004611169	3.75169E-06	0.004615
7448041452	574480	4145200	0.002378434	4.76802E-06	0.002383
7449041452	574490	4145200	0.002674834	4.90147E-06	0.00268
7450041452	574500	4145200	0.003098025	5.12629E-06	0.003103
7451041452	574510	4145200	0.003645226	5.44334E-06	0.003651
7443041452	574430	4145210	0.004326447	6.04662E-06	0.004332
7444041452	574440	4145210	0.005146136	6.1397E-06	0.005152
7445041452	574450	4145210	0.005899094	5.78957E-06	0.005905
7446041452	574460	4145210	0.007056335	5.93555E-06	0.007062
7447041452	574470	4145210	0.008254171	6.01672E-06	0.00826
7448041452	574480	4145210	0.00936192	6.01817E-06	0.009368
7449041452	574490	4145210	0.010136565	5.79612E-06	0.010142
7450041452	574500	4145210	0.010312848	5.71927E-06	0.010319
7451041452	574510	4145210	0.010092077	5.57673E-06	0.010098
7443041452	574430	4145220	0.009715598	4.96771E-06	0.009721
7444041452	574440	4145220	0.008827509	4.68575E-06	0.008832
7445041452	574450	4145220	0.007740892	4.4309E-06	0.007745
7446041452	574460	4145220	0.006621466	4.26246E-06	0.006626
7447041452	574470	4145220	0.005602693	4.05199E-06	0.005607
7448041452	574480	4145220	0.002468522	5.77302E-06	0.002474
7449041452	574490	4145220	0.002799956	5.46212E-06	0.002805
7450041452	574500	4145220	0.003276533	5.82039E-06	0.003282
7451041452	574510	4145220	0.003907705	6.88444E-06	0.003915
7452041452	574520	4145220	0.004684575	6.94689E-06	0.004692
7453041452	574530	4145220	0.005554313	6.50752E-06	0.005561
7444041452	574440	4145230	0.006895066	6.77452E-06	0.006902
7445041452	574450	4145230	0.008763002	7.1552E-06	0.00877

Max GLC for Chronic Calcs

Max GLC: 0.020647

XY	X	Y	2025	2026	2027	2034	2035
57449041451	574490	4145130	9.886E-06	3.712E-05	0		
57448041451	574480	4145140	1.094E-05	4.108E-05	0		
57449041451	574490	4145140	1.251E-05	4.698E-05	0		
57449041451	574490	4145150	1.416E-05	5.317E-05	0		
57450041451	574500	4145150	1.62E-05	6.08E-05	0		
57446041451	574460	4145160	1.801E-05	6.759E-05	0		
57449041451	574490	4145160	1.96E-05	7.355E-05	0		
57450041451	574500	4145160	2.131E-05	7.995E-05	0		
57451041451	574510	4145160	2.339E-05	8.776E-05	0		
57446041451	574460	4145170	2.474E-05	9.282E-05	0		
57447041451	574470	4145170	2.513E-05	9.431E-05	0		
57448041451	574480	4145170	2.476E-05	9.292E-05	0		
57449041451	574490	4145170	2.476E-05	9.289E-05	0		
57450041451	574500	4145170	2.423E-05	9.091E-05	0		
57451041451	574510	4145170	2.295E-05	8.611E-05	0		
57452041451	574520	4145170	2.132E-05	8.001E-05	0		
57446041451	574460	4145180	1.909E-05	7.165E-05	0		
57447041451	574470	4145180	1.715E-05	6.437E-05	0		
57448041451	574480	4145180	1.044E-05	3.919E-05	0		
57449041451	574490	4145180	1.151E-05	4.323E-05	0		
57450041451	574500	4145180	1.339E-05	5.026E-05	0		
57451041451	574510	4145180	1.547E-05	5.807E-05	0		
57452041451	574520	4145180	1.785E-05	6.7E-05	0		
57453041451	574530	4145180	2.038E-05	7.648E-05	0		
57445041451	574450	4145190	2.308E-05	8.659E-05	0		
57446041451	574460	4145190	2.596E-05	9.742E-05	0		
57447041451	574470	4145190	2.939E-05	0.0001103	0		
57448041451	574480	4145190	3.203E-05	0.0001202	0		
57449041451	574490	4145190	3.325E-05	0.0001247	0		
57450041451	574500	4145190	3.312E-05	0.0001243	0		
57451041451	574510	4145190	3.264E-05	0.0001225	0		
57452041451	574520	4145190	3.178E-05	0.0001192	0		
57444041452	574440	4145200	2.968E-05	0.0001113	0		
57445041452	574450	4145200	2.69E-05	0.0001009	0		
57446041452	574460	4145200	2.385E-05	8.95E-05	0		
57447041452	574470	4145200	2.09E-05	7.84E-05	0		
57448041452	574480	4145200	1.078E-05	4.048E-05	0		
57449041452	574490	4145200	1.212E-05	4.551E-05	0		
57450041452	574500	4145200	1.404E-05	5.271E-05	0		
57451041452	574510	4145200	1.652E-05	6.201E-05	0		
57443041452	574430	4145210	1.961E-05	7.359E-05	0		
57444041452	574440	4145210	2.332E-05	8.752E-05	0		
57445041452	574450	4145210	2.673E-05	0.0001003	0		
57446041452	574460	4145210	3.198E-05	0.00012	0		
57447041452	574470	4145210	3.74E-05	0.0001403	0		
57448041452	574480	4145210	4.242E-05	0.0001592	0		
57449041452	574490	4145210	4.593E-05	0.0001723	0		
57450041452	574500	4145210	4.673E-05	0.0001753	0		
57451041452	574510	4145210	4.573E-05	0.0001716	0		
57443041452	574430	4145220	4.403E-05	0.0001652	0		
57444041452	574440	4145220	4E-05	0.0001501	0		
57445041452	574450	4145220	3.508E-05	0.0001316	0		
57446041452	574460	4145220	3E-05	0.0001126	0		
57447041452	574470	4145220	2.539E-05	9.526E-05	0		
57448041452	574480	4145220	1.119E-05	4.202E-05	0		
57449041452	574490	4145220	1.269E-05	4.765E-05	0		
57450041452	574500	4145220	1.485E-05	5.575E-05	0		
57451041452	574510	4145220	1.771E-05	6.649E-05	0		
57452041452	574520	4145220	2.123E-05	7.969E-05	0		
57453041452	574530	4145220	2.517E-05	9.446E-05	0		
57444041452	574440	4145230	3.124E-05	0.0001173	0		
57445041452	574450	4145230	3.971E-05	0.000149	0		

Garvey Reservoir Rehab - Mitigated Facility Electrical System

Cancer Risk Summary & Maximum Annual GLC for Chronic Calculations

Cancer Risk Summary

Max Risk: 1.215106

XY	X	Y	Offroad Risk	Haul Risk	Total Risk
7446041452:	574460	4145230	0.010969045	7.23309E-06	0.010976
7447041452:	574470	4145230	0.013066092	7.21132E-06	0.013073
7448041452:	574480	4145230	0.014841159	7.0518E-06	0.014848
7449041452:	574490	4145230	0.0158844	6.46684E-06	0.015891
7450041452:	574500	4145230	0.015454536	6.57814E-06	0.015461
7451041452:	574510	4145230	0.01447191	5.65756E-06	0.014478
7452041452:	574520	4145230	0.012563379	5.42805E-06	0.012569
7444041452	574440	4145240	0.010421844	5.11181E-06	0.010427
7445041452	574450	4145240	0.008456591	4.7718E-06	0.008461
7446041452	574460	4145240	0.006821661	4.54106E-06	0.006826
7447041452	574470	4145240	0.002529136	6.47913E-06	0.002536
7448041452	574480	4145240	0.002931196	7.36029E-06	0.002939
7449041452	574490	4145240	0.003425567	7.1634E-06	0.003433
7450041452	574500	4145240	0.004093442	7.56265E-06	0.004101
7451041452	574510	4145240	0.004917024	7.16023E-06	0.004924
7445041452	574450	4145250	0.006094284	7.53039E-06	0.006102
7446041452	574460	4145250	0.007952766	8.25401E-06	0.007961
7447041452	574470	4145250	0.010607024	8.8146E-06	0.010616
7448041452	574480	4145250	0.014232787	8.70653E-06	0.014241
7446041452	574460	4145260	0.018806142	8.71847E-06	0.018815
7447041452	574470	4145260	0.023504619	8.73038E-06	0.023513
7448041452	574480	4145260	0.026992469	8.12273E-06	0.027001
7447041452	574470	4145270	0.026864011	7.96522E-06	0.026872
7449041451	574490	4145130	0.02326216	6.87374E-06	0.023269
7448041451	574480	4145140	0.018660444	6.34068E-06	0.018667
7449041451	574490	4145140	0.014489705	6.03429E-06	0.014496
7449041451	574490	4145150	0.010909542	5.38781E-06	0.010915
7450041451	574500	4145150	0.008335362	4.91204E-06	0.00834
7446041451	574460	4145160	0.002567507	7.16061E-06	0.002575
7449041451	574490	4145160	0.002990698	8.27063E-06	0.002999
7450041451	574500	4145160	0.00353067	8.74272E-06	0.003539
7451041451	574510	4145160	0.004222457	8.29595E-06	0.004231
7446041451	574460	4145170	0.005148361	8.21084E-06	0.005157
7447041451	574470	4145170	0.045765802	9.62655E-06	0.045775
7448041451	574480	4145170	0.029455986	7.58231E-06	0.029464
7449041451	574490	4145170	0.018063194	6.39169E-06	0.01807
7450041451	574500	4145170	0.012545028	5.65772E-06	0.012551
7451041451	574510	4145170	0.010010887	5.6671E-06	0.010017
7452041451	574520	4145170	0.002570288	7.50552E-06	0.002578
7446041451	574460	4145180	0.003009606	8.6734E-06	0.003018
7447041451	574470	4145180	0.003566816	9.3812E-06	0.003576
7448041451	574480	4145180	0.004275286	9.01347E-06	0.004284
7449041451	574490	4145180	0.088904037	1.13533E-05	0.088915
7450041451	574500	4145180	0.042499278	9.16846E-06	0.042508
7451041451	574510	4145180	0.023401185	7.61022E-06	0.023409
7452041451	574520	4145180	0.017448705	7.66594E-06	0.017456
7453041451	574530	4145180	0.011547943	7.01035E-06	0.011555
7445041451	574450	4145190	0.002591976	1.01181E-05	0.002602
7446041451	574460	4145190	0.00299904	9.58921E-06	0.003009
7447041451	574470	4145190	0.00355625	1.0406E-05	0.003567
7448041451	574480	4145190	0.004313657	1.12648E-05	0.004325
7449041451	574490	4145190	0.26226666	1.97022E-05	0.262286
7450041451	574500	4145190	0.083680603	1.55698E-05	0.083696
7451041451	574510	4145190	0.037527757	1.16812E-05	0.037539
7452041451	574520	4145190	0.02108559	9.12061E-06	0.021095
7444041452	574440	4145200	0.013371391	7.90547E-06	0.013379
7445041452	574450	4145200	0.002570844	1.22029E-05	0.002583
7446041452	574460	4145200	0.002984581	1.26037E-05	0.002997
7447041452	574470	4145200	0.003534563	1.37206E-05	0.003548
7448041452	574480	4145200	0.004260271	1.35101E-05	0.004274
7449041452	574490	4145200	0.400578945	4.30883E-05	0.400622
7450041452	574500	4145200	0.108654435	2.26029E-05	0.108677

Max GLC for Chronic Calcs

Max GLC: 0.020647

XY	X	Y	2025	2026	2027	2034	2035
57446041452:	574460	4145230	4.971E-05	0.0001865	0		
57447041452:	574470	4145230	5.921E-05	0.0002221	0		
57448041452:	574480	4145230	6.725E-05	0.0002523	0		
57449041452:	574490	4145230	7.198E-05	0.00027	0		
57450041452:	574500	4145230	7.003E-05	0.0002627	0		
57451041452:	574510	4145230	6.558E-05	0.000246	0		
57452041452:	574520	4145230	5.693E-05	0.0002136	0		
57444041452	574440	4145240	4.723E-05	0.0001772	0		
57445041452	574450	4145240	3.832E-05	0.0001438	0		
57446041452	574460	4145240	3.091E-05	0.000116	0		
57447041452	574470	4145240	1.146E-05	4.306E-05	0		
57448041452	574480	4145240	1.328E-05	4.99E-05	0		
57449041452	574490	4145240	1.552E-05	5.83E-05	0		
57450041452	574500	4145240	1.855E-05	6.965E-05	0		
57451041452	574510	4145240	2.228E-05	8.364E-05	0		
57445041452	574450	4145250	2.762E-05	0.0001037	0		
57446041452	574460	4145250	3.604E-05	0.0001352	0		
57447041452	574470	4145250	4.807E-05	0.0001804	0		
57448041452	574480	4145250	6.45E-05	0.000242	0		
57446041452	574460	4145260	8.522E-05	0.0003197	0		
57447041452	574470	4145260	0.0001065	0.0003995	0		
57448041452	574480	4145260	0.0001223	0.0004588	0		
57447041452	574470	4145270	0.0001217	0.0004566	0		
57449041451	574490	4145130	0.0001054	0.0003954	0		
57448041451	574480	4145140	8.456E-05	0.0003172	0		
57449041451	574490	4145140	6.566E-05	0.0002463	0		
57449041451	574490	4145150	4.944E-05	0.0001855	0		
57450041451	574500	4145150	3.777E-05	0.0001417	0		
57446041451	574460	4145160	1.163E-05	4.372E-05	0		
57449041451	574490	4145160	1.355E-05	5.092E-05	0		
57450041451	574500	4145160	1.6E-05	6.01E-05	0		
57451041451	574510	4145160	1.913E-05	7.185E-05	0		
57446041451	574460	4145170	2.333E-05	8.759E-05	0		
57447041451	574470	4145170	0.0002074	0.0007778	0		
57448041451	574480	4145170	0.0001335	0.0005006	0		
57449041451	574490	4145170	8.185E-05	0.000307	0		
57450041451	574500	4145170	5.685E-05	0.0002132	0		
57451041451	574510	4145170	4.536E-05	0.0001702	0		
57452041451	574520	4145170	1.165E-05	4.377E-05	0		
57446041451	574460	4145180	1.364E-05	5.125E-05	0		
57447041451	574470	4145180	1.616E-05	6.073E-05	0		
57448041451	574480	4145180	1.937E-05	7.276E-05	0		
57449041451	574490	4145180	0.0004029	0.0015109	0		
57450041451	574500	4145180	0.0001926	0.0007223	0		
57451041451	574510	4145180	0.000106	0.0003978	0		
57452041451	574520	4145180	7.907E-05	0.0002966	0		
57453041451	574530	4145180	5.233E-05	0.0001963	0		
57445041451	574450	4145190	1.175E-05	4.417E-05	0		
57446041451	574460	4145190	1.359E-05	5.108E-05	0		
57447041451	574470	4145190	1.612E-05	6.056E-05	0		
57448041451	574480	4145190	1.955E-05	7.344E-05	0		
57449041451	574490	4145190	0.0011885	0.0044569	0		
57450041451	574500	4145190	0.0003792	0.0014222	0		
57451041451	574510	4145190	0.0001701	0.0006379	0		
57452041451	574520	4145190	9.555E-05	0.0003584	0		
57444041452	574440	4145200	6.059E-05	0.0002273	0		
57445041452	574450	4145200	1.165E-05	4.384E-05	0		
57446041452	574460	4145200	1.352E-05	5.087E-05	0		
57447041452	574470	4145200	1.602E-05	6.023E-05	0		
57448041452	574480	4145200	1.931E-05	7.256E-05	0		
57449041452	574490	4145200	0.0018152	0.0068076	0		
57450041452	574500	4145200	0.0004924	0.0018466	0		

Garvey Reservoir Rehab - Mitigated Facility Electrical System

Cancer Risk Summary & Maximum Annual GLC for Chronic Calculations

Cancer Risk Summary

Max Risk: 1.215106

XY	X	Y	Offroad Risk	Haul Risk	Total Risk
7451041452(	574510	4145200	0.045698514	1.54246E-05	0.045714
7443041452:	574430	4145210	0.024994963	1.13744E-05	0.025006
7444041452:	574440	4145210	0.015053589	9.33319E-06	0.015063
7445041452:	574450	4145210	0.00242459	1.45133E-05	0.002439
7446041452:	574460	4145210	0.002915625	1.42822E-05	0.00293
7447041452:	574470	4145210	0.00344225	1.60325E-05	0.003458
7448041452:	574480	4145210	0.004136817	1.65907E-05	0.004153
7449041452:	574490	4145210	0.267370533	0.000342455	0.267713
7450041452:	574500	4145210	0.203356912	6.72241E-05	0.203424
7451041452:	574510	4145210	0.099793004	3.06899E-05	0.099824
7443041452:	574430	4145220	0.04820485	1.92298E-05	0.048224
7444041452:	574440	4145220	0.026876801	1.3775E-05	0.026891
7445041452:	574450	4145220	0.01711171	1.06047E-05	0.017122
7446041452:	574460	4145220	0.002253868	1.71041E-05	0.002271
7447041452:	574470	4145220	0.002828874	1.78097E-05	0.002847
7448041452:	574480	4145220	0.003316572	1.98845E-05	0.003336
7449041452:	574490	4145220	0.003959978	2.1453E-05	0.003981
7450041452:	574500	4145220	0.068119297	0.000537614	0.068657
7451041452:	574510	4145220	0.101731563	0.000241802	0.101973
7452041452:	574520	4145220	0.100557083	7.80239E-05	0.100635
7453041452:	574530	4145220	0.07101657	3.74577E-05	0.071054
7444041452:	574440	4145230	0.044325506	2.27046E-05	0.044348
7445041452:	574450	4145230	0.027576929	1.59617E-05	0.027593
7446041452:	574460	4145230	0.018372385	1.14819E-05	0.018384
7447041452:	574470	4145230	0.002167116	2.09844E-05	0.002188
7448041452:	574480	4145230	0.002692073	2.26147E-05	0.002715
7449041452:	574490	4145230	0.003021284	2.50663E-05	0.003046
7450041452:	574500	4145230	0.003734758	2.80684E-05	0.003763
7451041452:	574510	4145230	0.026084916	9.99207E-05	0.026185
7452041452:	574520	4145230	0.039405146	0.000545708	0.039951
7444041452(	574440	4145240	0.052386155	0.000221091	0.052607
7445041452(	574450	4145240	0.054320266	7.19042E-05	0.054392
7446041452(	574460	4145240	0.04657993	4.29808E-05	0.046623
7447041452(	574470	4145240	0.034164473	2.66708E-05	0.034191
7448041452(	574480	4145240	0.024553421	1.68734E-05	0.02457
7449041452(	574490	4145240	0.017401993	1.3154E-05	0.017415
7450041452(	574500	4145240	0.00226499	2.67017E-05	0.002292
7451041452(	574510	4145240	0.002333946	3.00993E-05	0.002364
7445041452:	574450	4145250	0.002686512	3.24733E-05	0.002719
7446041452:	574460	4145250	0.00348507	3.89941E-05	0.003524
7447041452:	574470	4145250	0.004076759	3.81891E-05	0.004115
7448041452:	574480	4145250	0.007840434	4.88706E-05	0.007889
7446041452(	574460	4145260	0.010210526	5.67454E-05	0.010267
7447041452(	574470	4145260	0.013589381	7.01314E-05	0.01366
7448041452(	574480	4145260	0.018657664	0.000120075	0.018778
7447041452:	574470	4145270	0.025215178	0.000529376	0.025745
7449041451:	574490	4145130	0.031652576	0.000221734	0.031874
7448041451(	574480	4145140	0.032850968	7.10485E-05	0.032922
7449041451(	574490	4145140	0.031476848	4.25298E-05	0.031519
7449041451:	574490	4145150	0.025971472	2.82742E-05	0.026
7450041451:	574500	4145150	0.019988964	2.01209E-05	0.020009
7446041451(	574460	4145160	0.015287706	1.46911E-05	0.015302
7449041451(	574490	4145160	0.002154882	4.69082E-05	0.002202
7450041451(	574500	4145160	0.002444053	5.35546E-05	0.002498
7451041451(	574510	4145160	0.00255861	5.20021E-05	0.002611
7446041451:	574460	4145170	0.003225928	6.38421E-05	0.00329
7447041451:	574470	4145170	0.003775353	6.45387E-05	0.00384
7448041451:	574480	4145170	0.004485491	6.5891E-05	0.004551
7449041451:	574490	4145170	0.00541362	6.83773E-05	0.005482
7450041451:	574500	4145170	0.006674851	7.59386E-05	0.006751
7451041451:	574510	4145170	0.008383742	8.3123E-05	0.008467
7452041451:	574520	4145170	0.010711571	9.64219E-05	0.010808

Max GLC for Chronic Calcs

Max GLC: 0.020647

XY	X	Y	2025	2026	2027	2034	2035
57451041452(	574510	4145200	0.0002071	0.0007767	0		
57443041452:	574430	4145210	0.0001133	0.0004249	0		
57444041452:	574440	4145210	6.821E-05	0.0002559	0		
57445041452:	574450	4145210	1.099E-05	4.138E-05	0		
57446041452:	574460	4145210	1.321E-05	4.972E-05	0		
57447041452:	574470	4145210	1.56E-05	5.869E-05	0		
57448041452:	574480	4145210	1.875E-05	7.05E-05	0		
57449041452:	574490	4145210	0.0012116	0.0045476	0		
57450041452:	574500	4145210	0.0009215	0.0034565	0		
57451041452:	574510	4145210	0.0004522	0.0016962	0		
57443041452:	574430	4145220	0.0002184	0.0008194	0		
57444041452:	574440	4145220	0.0001218	0.0004569	0		
57445041452:	574450	4145220	7.754E-05	0.0002909	0		
57446041452:	574460	4145220	1.021E-05	3.851E-05	0		
57447041452:	574470	4145220	1.282E-05	4.829E-05	0		
57448041452:	574480	4145220	1.503E-05	5.66E-05	0		
57449041452:	574490	4145220	1.794E-05	6.756E-05	0		
57450041452:	574500	4145220	0.0003087	0.0011642	0		
57451041452:	574510	4145220	0.000461	0.0017317	0		
57452041452:	574520	4145220	0.0004557	0.0017097	0		
57453041452:	574530	4145220	0.0003218	0.0012072	0		
57444041452:	574440	4145230	0.0002009	0.0007535	0		
57445041452:	574450	4145230	0.000125	0.0004688	0		
57446041452:	574460	4145230	8.325E-05	0.0003123	0		
57447041452:	574470	4145230	9.82E-06	3.708E-05	0		
57448041452:	574480	4145230	1.22E-05	4.602E-05	0		
57449041452:	574490	4145230	1.369E-05	5.165E-05	0		
57450041452:	574500	4145230	1.692E-05	6.381E-05	0		
57451041452:	574510	4145230	0.0001182	0.0004445	0		
57452041452:	574520	4145230	0.0001786	0.0006763	0		
57444041452(	574440	4145240	0.0002374	0.0008929	0		
57445041452(	574450	4145240	0.0002462	0.0009239	0		
57446041452(	574460	4145240	0.0002111	0.0007921	0		
57447041452(	574470	4145240	0.0001548	0.0005809	0		
57448041452(	574480	4145240	0.0001113	0.0004174	0		
57449041452(	574490	4145240	7.886E-05	0.0002959	0		
57450041452(	574500	4145240	1.026E-05	3.882E-05	0		
57451041452(	574510	4145240	1.058E-05	4.003E-05	0		
57445041452:	574450	4145250	1.217E-05	4.605E-05	0		
57446041452:	574460	4145250	1.579E-05	5.97E-05	0		
57447041452:	574470	4145250	1.847E-05	6.975E-05	0		
57448041452:	574480	4145250	3.553E-05	0.0001338	0		
57446041452(	574460	4145260	4.627E-05	0.0001742	0		
57447041452(	574470	4145260	6.158E-05	0.0002318	0		
57448041452(	574480	4145260	8.455E-05	0.0003185	0		
57447041452:	574470	4145270	0.0001143	0.000435	0		
57449041451:	574490	4145130	0.0001434	0.0005406	0		
57448041451(	574480	4145140	0.0001489	0.0005591	0		
57449041451(	574490	4145140	0.0001426	0.0005354	0		
57449041451:	574490	4145150	0.0001177	0.0004417	0		
57450041451:	574500	4145150	9.058E-05	0.0003399	0		
57446041451(	574460	4145160	6.928E-05	0.00026	0		
57449041451(	574490	4145160	9.765E-06	3.719E-05	0		
57450041451(	574500	4145160	1.108E-05	4.219E-05	0		
57451041451(	574510	4145160	1.159E-05	4.412E-05	0		
57446041451:	574460	4145170	1.462E-05	5.56E-05	0		
57447041451:	574470	4145170	1.711E-05	6.495E-05	0		
57448041451:	574480	4145170	2.033E-05	7.703E-05	0		
57449041451:	574490	4145170	2.453E-05	9.283E-05	0		
57450041451:	574500	4145170	3.025E-05	0.0001144	0		
57451041451:	574510	4145170	3.799E-05	0.0001435	0		
57452041451:	574520	4145170	4.854E-05	0.0001832	0		

Garvey Reservoir Rehab - Mitigated Facility Electrical System

Cancer Risk Summary & Maximum Annual GLC for Chronic Calculations

Cancer Risk Summary

Max Risk: 1.215106

XY	X	Y	Offroad Risk	Haul Risk	Total Risk
7446041451	574460	4145180	0.013700045	0.000151336	0.013851
7447041451	574470	4145180	0.021135639	0.000201245	0.021337
7448041451	574480	4145180	0.022964091	8.10824E-05	0.023045
7449041451	574490	4145180	0.022243944	4.42168E-05	0.022288
7450041451	574500	4145180	0.01964029	2.89701E-05	0.019669
7451041451	574510	4145180	0.016207493	2.13679E-05	0.016229
7452041451	574520	4145180	0.013091673	1.56902E-05	0.013107
7453041451	574530	4145180	0.002051448	0.000136208	0.002188
7445041451	574450	4145190	0.002299468	0.000169248	0.002469
7446041451	574460	4145190	0.002460736	0.000124078	0.002585
7447041451	574470	4145190	0.002978464	0.000162135	0.003141
7448041451	574480	4145190	0.003428904	0.000173625	0.003603
7449041451	574490	4145190	0.004007803	0.000173564	0.004181
7450041451	574500	4145190	0.004759092	0.000179543	0.004939
7451041451	574510	4145190	0.005733933	0.000186666	0.005921
7452041451	574520	4145190	0.006979037	0.00019127	0.00717
7444041452	574440	4145200	0.008564474	0.000206057	0.008771
7445041452	574450	4145200	0.010466332	0.000248144	0.010714
7446041452	574460	4145200	0.012819185	0.000791457	0.013611
7447041452	574470	4145200	0.014958496	0.000274997	0.015233
7448041452	574480	4145200	0.016208606	9.67223E-05	0.016305
7449041452	574490	4145200	0.016161893	5.18747E-05	0.016214
7450041452	574500	4145200	0.014920125	3.2625E-05	0.014953
7451041452	574510	4145200	0.012987683	2.23354E-05	0.01301
7443041452	574430	4145210	0.01099685	1.62588E-05	0.011013
7444041452	574440	4145210	0.001932999	0.000548387	0.002481
7445041452	574450	4145210	0.002161555	0.000706263	0.002868
7446041452	574460	4145210	0.002417917	0.000691573	0.003109
7447041452	574470	4145210	0.002749908	0.00076182	0.003512
7448041452	574480	4145210	0.00313584	0.000718502	0.003854
7449041452	574490	4145210	0.003604075	0.00078061	0.004385
7450041452	574500	4145210	0.004216896	0.000755512	0.004972
7451041452	574510	4145210	0.005033248	0.000733904	0.005767
7443041452	574430	4145220	0.005963045	0.000705709	0.006669
7444041452	574440	4145220	0.007023525	0.000713454	0.007737
7445041452	574450	4145220	0.008303108	0.000733286	0.009036
7446041452	574460	4145220	0.009796233	0.000770376	0.010567
7447041452	574470	4145220	0.011106957	0.000378787	0.011486
7448041452	574480	4145220	0.012012842	0.00010137	0.012114
7449041452	574490	4145220	0.012199691	5.1835E-05	0.012252
7450041452	574500	4145220	0.011542938	3.21527E-05	0.011575
7451041452	574510	4145220	0.010441863	2.22254E-05	0.010464
7452041452	574520	4145220	0.009204544	1.64495E-05	0.009221
7453041452	574530	4145220	0.003747548	7.3929E-06	0.003755
7444041452	574440	4145230	0.004101783	7.56953E-06	0.004109
7445041452	574450	4145230	0.004476038	7.05538E-06	0.004483
7446041452	574460	4145230	0.004949277	7.25934E-06	0.004957
7447041452	574470	4145230	0.00538359	6.97198E-06	0.005391
7448041452	574480	4145230	0.005994743	7.1344E-06	0.006002
7449041452	574490	4145230	0.006863925	7.45613E-06	0.006871
7450041452	574500	4145230	0.007687507	7.5188E-06	0.007695
7451041452	574510	4145230	0.008831402	7.9425E-06	0.008839
7452041452	574520	4145230	0.010157697	8.17382E-06	0.010166
7444041452	574440	4145240	0.011596324	8.15125E-06	0.011604
7445041452	574450	4145240	0.013199556	8.09712E-06	0.013208
7446041452	574460	4145240	0.014911228	8.06303E-06	0.014919
7447041452	574470	4145240	0.016616782	8.10419E-06	0.016625
7448041452	574480	4145240	0.018242814	8.11409E-06	0.018251
7449041452	574490	4145240	0.019750397	8.0074E-06	0.019758
7450041452	574500	4145240	0.020920985	7.83748E-06	0.020929
7451041452	574510	4145240	0.021746791	7.39168E-06	0.021754
7445041452	574450	4145250	0.021756245	7.39464E-06	0.021764

Max GLC for Chronic Calcs

Max GLC: 0.020647

XY	X	Y	2025	2026	2027	2034	2035
574460414518	574460	4145180	6.208E-05	0.0002347	0		
574470414518	574470	4145180	9.578E-05	0.0003616	0		
574480414518	574480	4145180	0.0001041	0.0003912	0		
574490414518	574490	4145180	0.0001008	0.0003785	0		
574500414518	574500	4145180	8.9E-05	0.0003341	0		
574510414518	574510	4145180	7.344E-05	0.0002757	0		
574520414518	574520	4145180	5.932E-05	0.0002227	0		
574530414518	574530	4145180	9.296E-06	3.653E-05	0		
574450414519	574450	4145190	1.042E-05	4.115E-05	0		
574460414519	574460	4145190	1.115E-05	4.334E-05	0		
574470414519	574470	4145190	1.35E-05	5.26E-05	0		
574480414519	574480	4145190	1.554E-05	6.04E-05	0		
574490414519	574490	4145190	1.816E-05	7.024E-05	0		
574500414519	574500	4145190	2.157E-05	8.308E-05	0		
574510414519	574510	4145190	2.598E-05	9.973E-05	0		
574520414519	574520	4145190	3.163E-05	0.0001209	0		
574440414520	574440	4145200	3.881E-05	0.0001481	0		
574450414520	574450	4145200	4.743E-05	0.0001809	0		
574460414520	574460	4145200	5.809E-05	0.0002276	0		
574470414520	574470	4145200	6.778E-05	0.0002576	0		
574480414520	574480	4145200	7.345E-05	0.0002766	0		
574490414520	574490	4145200	7.324E-05	0.0002753	0		
574500414520	574500	4145200	6.761E-05	0.0002539	0		
574510414520	574510	4145200	5.885E-05	0.000221	0		
574430414521	574430	4145210	4.983E-05	0.0001871	0		
574440414521	574440	4145210	8.759E-06	3.958E-05	0		
574450414521	574450	4145210	9.795E-06	4.54E-05	0		
574460414521	574460	4145210	1.096E-05	4.958E-05	0		
574470414521	574470	4145210	1.246E-05	5.608E-05	0		
574480414521	574480	4145210	1.421E-05	6.211E-05	0		
574490414521	574490	4145210	1.633E-05	7.083E-05	0		
574500414521	574500	4145210	1.911E-05	8.093E-05	0		
574510414521	574510	4145210	2.281E-05	9.454E-05	0		
574430414522	574430	4145220	2.702E-05	0.00011	0		
574440414522	574440	4145220	3.183E-05	0.0001281	0		
574450414522	574450	4145220	3.763E-05	0.0001501	0		
574460414522	574460	4145220	4.439E-05	0.0001759	0		
574470414522	574470	4145220	5.033E-05	0.0001934	0		
574480414522	574480	4145220	5.444E-05	0.0002054	0		
574490414522	574490	4145220	5.528E-05	0.0002079	0		
574500414522	574500	4145220	5.231E-05	0.0001965	0		
574510414522	574510	4145220	4.732E-05	0.0001777	0		
574520414522	574520	4145220	4.171E-05	0.0001566	0		
574530414522	574530	4145220	1.698E-05	6.377E-05	0		
574440414523	574440	4145230	1.859E-05	6.979E-05	0		
574450414523	574450	4145230	2.028E-05	7.615E-05	0		
574460414523	574460	4145230	2.243E-05	8.419E-05	0		
574470414523	574470	4145230	2.44E-05	9.157E-05	0		
574480414523	574480	4145230	2.717E-05	0.000102	0		
574490414523	574490	4145230	3.11E-05	0.0001167	0		
574500414523	574500	4145230	3.484E-05	0.0001307	0		
574510414523	574510	4145230	4.002E-05	0.0001502	0		
574520414523	574520	4145230	4.603E-05	0.0001727	0		
574440414524	574440	4145240	5.255E-05	0.0001972	0		
574450414524	574450	4145240	5.981E-05	0.0002244	0		
574460414524	574460	4145240	6.757E-05	0.0002535	0		
574470414524	574470	4145240	7.53E-05	0.0002825	0		
574480414524	574480	4145240	8.267E-05	0.0003101	0		
574490414524	574490	4145240	8.95E-05	0.0003357	0		
574500414524	574500	4145240	9.48E-05	0.0003556	0		
574510414524	574510	4145240	9.854E-05	0.0003696	0		
574450414525	574450	4145250	9.859E-05	0.0003698	0		

Garvey Reservoir Rehab - Mitigated Facility Electrical System

Cancer Risk Summary & Maximum Annual GLC for Chronic Calculations

Cancer Risk Summary

Max Risk: 1.215106

XY	X	Y	Offroad Risk	Haul Risk	Total Risk
7446041452	574460	4145250	0.021184576	7.37013E-06	0.021192
7447041452	574470	4145250	0.020272574	7.17216E-06	0.02028
7448041452	574480	4145250	0.019040816	6.33661E-06	0.019047
7446041452	574460	4145260	0.017463164	6.12562E-06	0.017469
7447041452	574470	4145260	0.003822622	7.89732E-06	0.003831
7448041452	574480	4145260	0.004177413	7.60833E-06	0.004185
7447041452	574470	4145270	0.004569462	7.20579E-06	0.004577
7449041451	574490	4145130	0.005019346	7.29301E-06	0.005027
7448041451	574480	4145140	0.005584898	7.48502E-06	0.005592
7449041451	574490	4145140	0.006297817	7.70976E-06	0.006306
7449041451	574490	4145150	0.007242628	8.31629E-06	0.007251
7450041451	574500	4145150	0.008259732	8.51851E-06	0.008268
7446041451	574460	4145160	0.009560447	8.90016E-06	0.009569
7449041451	574490	4145160	0.011094167	9.02731E-06	0.011103
7450041451	574500	4145160	0.012899263	9.02323E-06	0.012908
7451041451	574510	4145160	0.01503913	8.91219E-06	0.015048
7446041451	574460	4145170	0.017469837	8.86237E-06	0.017479
7447041451	574470	4145170	0.020104076	8.94537E-06	0.020113
7448041451	574480	4145170	0.022779466	9.01005E-06	0.022788
7449041451	574490	4145170	0.02535031	8.96957E-06	0.025359
7450041451	574500	4145170	0.027497407	8.85728E-06	0.027506
7451041451	574510	4145170	0.029165147	8.36697E-06	0.029174
7452041451	574520	4145170	0.029559977	8.16369E-06	0.029568
7446041451	574460	4145180	0.02874696	8.18976E-06	0.028755
7447041451	574470	4145180	0.027098128	8.02209E-06	0.027106
7448041451	574480	4145180	0.024313742	6.99056E-06	0.024321
7449041451	574490	4145180	0.02200927	6.7801E-06	0.022016
7450041451	574500	4145180	0.003886017	8.43152E-06	0.003894
7451041451	574510	4145180	0.004266388	8.37787E-06	0.004275
7452041451	574520	4145180	0.004645092	7.59786E-06	0.004653
7453041451	574530	4145180	0.005154478	7.81603E-06	0.005162
7445041451	574450	4145190	0.005770635	8.05151E-06	0.005779
7446041451	574460	4145190	0.006650939	8.98059E-06	0.00666
7447041451	574470	4145190	0.00761299	9.40788E-06	0.007622
7448041451	574480	4145190	0.008774124	9.65444E-06	0.008784
7449041451	574490	4145190	0.010218868	9.89509E-06	0.010229
7450041451	574500	4145190	0.012011173	1.00113E-05	0.012021
7451041451	574510	4145190	0.014224446	1.00415E-05	0.014234
7452041451	574520	4145190	0.016959895	9.93802E-06	0.01697
7444041452	574440	4145200	0.020253667	9.8587E-06	0.020264
7445041452	574450	4145200	0.024231996	1.00714E-05	0.024242
7446041452	574460	4145200	0.028519516	1.02566E-05	0.02853
7447041452	574470	4145200	0.03330252	1.0121E-05	0.033313
7448041452	574480	4145200	0.03778968	9.73046E-06	0.037799
7449041452	574490	4145200	0.040447275	9.21761E-06	0.040456
7450041452	574500	4145200	0.040489538	8.78776E-06	0.040498
7451041452	574510	4145200	0.041208018	9.14168E-06	0.041217
7443041452	574430	4145210	0.034009321	8.61705E-06	0.034018
7444041452	574440	4145210	0.028166393	7.36466E-06	0.028174
7445041452	574450	4145210	0.003933841	8.91571E-06	0.003943
7446041452	574460	4145210	0.004276398	7.92651E-06	0.004284
7447041452	574470	4145210	0.00472795	8.13483E-06	0.004736
7448041452	574480	4145210	0.005300732	8.50324E-06	0.005309
7449041452	574490	4145210	0.047481922	9.34897E-06	0.047491
7450041452	574500	4145210	0.035325607	8.12419E-06	0.035334
7451041452	574510	4145210	0.003967207	9.46488E-06	0.003977
7443041452	574430	4145220	0.004322554	8.50751E-06	0.004331
7444041452	574440	4145220	0.004802467	8.81224E-06	0.004811
7445041452	574450	4145220	0.061839831	9.93355E-06	0.06185
7446041452	574460	4145220	0.046459257	9.08064E-06	0.046468
7447041452	574470	4145220	0.003958866	9.28566E-06	0.003968
7448041452	574480	4145220	0.004358145	9.24546E-06	0.004367

Max GLC for Chronic Calcs

Max GLC: 0.020647

XY	X	Y	2025	2026	2027	2034	2035
57446041452	574460	4145250	9.6E-05	0.0003601	0		
57447041452	574470	4145250	9.186E-05	0.0003446	0		
57448041452	574480	4145250	8.628E-05	0.0003236	0		
57446041452	574460	4145260	7.913E-05	0.0002968	0		
57447041452	574470	4145260	1.732E-05	6.505E-05	0		
57448041452	574480	4145260	1.893E-05	7.108E-05	0		
57447041452	574470	4145270	2.071E-05	7.774E-05	0		
57449041451	574490	4145130	2.275E-05	8.538E-05	0		
57448041451	574480	4145140	2.531E-05	9.5E-05	0		
57449041451	574490	4145140	2.854E-05	0.0001071	0		
57449041451	574490	4145150	3.282E-05	0.0001232	0		
57450041451	574500	4145150	3.743E-05	0.0001405	0		
57446041451	574460	4145160	4.332E-05	0.0001626	0		
57449041451	574490	4145160	5.027E-05	0.0001886	0		
57450041451	574500	4145160	5.845E-05	0.0002193	0		
57451041451	574510	4145160	6.815E-05	0.0002557	0		
57446041451	574460	4145170	7.916E-05	0.000297	0		
57447041451	574470	4145170	9.11E-05	0.0003417	0		
57448041451	574480	4145170	0.0001032	0.0003872	0		
57449041451	574490	4145170	0.0001149	0.0004309	0		
57450041451	574500	4145170	0.0001246	0.0004674	0		
57451041451	574510	4145170	0.0001322	0.0004957	0		
57452041451	574520	4145170	0.000134	0.0005024	0		
57446041451	574460	4145180	0.0001303	0.0004886	0		
57447041451	574470	4145180	0.0001228	0.0004606	0		
57448041451	574480	4145180	0.0001102	0.0004132	0		
57449041451	574490	4145180	9.973E-05	0.0003741	0		
57450041451	574500	4145180	1.761E-05	6.614E-05	0		
57451041451	574510	4145180	1.933E-05	7.26E-05	0		
57452041451	574520	4145180	2.105E-05	7.903E-05	0		
57453041451	574530	4145180	2.336E-05	8.769E-05	0		
57445041451	574450	4145190	2.615E-05	9.816E-05	0		
57446041451	574460	4145190	3.014E-05	0.0001131	0		
57447041451	574470	4145190	3.45E-05	0.0001295	0		
57448041451	574480	4145190	3.976E-05	0.0001492	0		
57449041451	574490	4145190	4.631E-05	0.0001738	0		
57450041451	574500	4145190	5.443E-05	0.0002042	0		
57451041451	574510	4145190	6.446E-05	0.0002418	0		
57452041451	574520	4145190	7.685E-05	0.0002883	0		
57444041452	574440	4145200	9.178E-05	0.0003443	0		
57445041452	574450	4145200	0.0001098	0.0004119	0		
57446041452	574460	4145200	0.0001292	0.0004848	0		
57447041452	574470	4145200	0.0001509	0.000566	0		
57448041452	574480	4145200	0.0001712	0.0006423	0		
57449041452	574490	4145200	0.0001833	0.0006874	0		
57450041452	574500	4145200	0.0001835	0.0006881	0		
57451041452	574510	4145200	0.0001867	0.0007004	0		
57443041452	574430	4145210	0.0001541	0.000578	0		
57444041452	574440	4145210	0.0001276	0.0004787	0		
57445041452	574450	4145210	1.783E-05	6.696E-05	0		
57446041452	574460	4145210	1.938E-05	7.277E-05	0		
57447041452	574470	4145210	2.142E-05	8.044E-05	0		
57448041452	574480	4145210	2.402E-05	9.018E-05	0		
57449041452	574490	4145210	0.0002152	0.000807	0		
57450041452	574500	4145210	0.0001601	0.0006004	0		
57451041452	574510	4145210	1.798E-05	6.753E-05	0		
57443041452	574430	4145220	1.959E-05	7.356E-05	0		
57444041452	574440	4145220	2.176E-05	8.172E-05	0		
57445041452	574450	4145220	0.0002802	0.001051	0		
57446041452	574460	4145220	0.0002105	0.0007896	0		
57447041452	574470	4145220	1.794E-05	6.739E-05	0		
57448041452	574480	4145220	1.975E-05	7.417E-05	0		

Garvey Reservoir Rehab - Mitigated Facility Electrical System

Cancer Risk Summary & Maximum Annual GLC for Chronic Calculations

Cancer Risk Summary

Max Risk: 1.215106

XY	X	Y	Offroad Risk	Haul Risk	Total Risk
7449041452	574490	4145220	0.089476819	1.14159E-05	0.089488
7450041452	574500	4145220	0.0609434	1.03466E-05	0.060954
7451041452	574510	4145220	0.003965539	1.00104E-05	0.003976
7452041452	574520	4145220	0.004382613	1.03435E-05	0.004393
7453041452	574530	4145220	0.155004696	1.52409E-05	0.15502
7444041452	574440	4145230	0.098883227	1.42619E-05	0.098897
7445041452	574450	4145230	0.003966095	1.10392E-05	0.003977
7446041452	574460	4145230	0.004390398	1.16026E-05	0.004402
7447041452	574470	4145230	0.251943246	2.05142E-05	0.251964
7448041452	574480	4145230	0.138078167	1.88928E-05	0.138097
7449041452	574490	4145230	0.003975549	1.3746E-05	0.003989
7450041452	574500	4145230	0.00436593	1.26618E-05	0.004379
7451041452	574510	4145230	1.104028644	4.35206E-05	1.104072
7452041452	574520	4145230	0.360012665	3.15292E-05	0.360044
7444041452	574440	4145240	0.166637166	2.37895E-05	0.166661
7445041452	574450	4145240	0.003936066	1.48093E-05	0.003951
7446041452	574460	4145240	0.004323667	1.38608E-05	0.004338
7447041452	574470	4145240	1.214848526	0.000257966	1.215106
7448041452	574480	4145240	0.657360248	7.45134E-05	0.657435
7449041452	574490	4145240	0.335791235	4.26948E-05	0.335834
7450041452	574500	4145240	0.175002557	2.93964E-05	0.175032
7451041452	574510	4145240	0.003882124	1.60283E-05	0.003898
7445041452	574450	4145250	0.004264164	1.53265E-05	0.004279
7446041452	574460	4145250	0.461368306	0.000375798	0.461744
7447041452	574470	4145250	0.339336363	9.55639E-05	0.339432
7448041452	574480	4145250	0.224936874	5.15251E-05	0.224988
7446041452	574460	4145260	0.14500938	3.49518E-05	0.145044
7447041452	574470	4145260	0.003812056	1.71572E-05	0.003829
7448041452	574480	4145260	0.004189091	1.70758E-05	0.004206
7447041452	574470	4145270	0.194678438	0.00099557	0.195674
7457041450	574570	4145030	0.236799569	0.000263543	0.237063
7463041450	574630	4145080	0.228424724	0.000116152	0.228541
7461041450	574610	4145090	0.181550062	6.40332E-05	0.181614
7462041450	574620	4145090	0.129525927	4.15479E-05	0.129567
7463041450	574630	4145090	0.003740319	1.9441E-05	0.00376
7464041450	574640	4145090	0.004100671	1.92959E-05	0.00412
7460041451	574600	4145100	0.004539433	2.05695E-05	0.00456
7461041451	574610	4145100	0.092319039	0.000808834	0.093128
7462041451	574620	4145100	0.121269531	0.000596274	0.121866
7463041451	574630	4145100	0.142573668	0.000219633	0.142793
7464041451	574640	4145100	0.14442214	0.000115484	0.144538
7465041451	574650	4145100	0.127581806	6.94477E-05	0.127651
7459041451	574590	4145110	0.102743663	4.61391E-05	0.10279
7460041451	574600	4145110	0.003651899	2.16039E-05	0.003674
7461041451	574610	4145110	0.003997793	2.19904E-05	0.00402
7462041451	574620	4145110	0.004410974	2.30489E-05	0.004434
7463041451	574630	4145110	0.051250046	0.000194442	0.051444
7464041451	574640	4145110	0.066223	0.000770149	0.066993
7465041451	574650	4145110	0.08233985	0.000596473	0.082936
7466041451	574660	4145110	0.094648536	0.00021143	0.09486
7460041451	574600	4145120	0.097835537	0.00011568	0.097951
7461041451	574610	4145120	0.091430393	7.31496E-05	0.091504
7462041451	574620	4145120	0.078903716	5.02444E-05	0.078954
7463041451	574630	4145120	0.003561811	2.45194E-05	0.003586
7464041451	574640	4145120	0.003885461	2.52504E-05	0.003911
7465041451	574650	4145120	0.004270281	2.61606E-05	0.004296
7466041451	574660	4145120	0.031598634	0.000104752	0.031703
7460041451	574600	4145130	0.040081918	0.000203981	0.040286
7462041451	574620	4145130	0.049592872	0.000773958	0.050367
7463041451	574630	4145130	0.059344061	0.000582364	0.059926
7464041451	574640	4145130	0.067249002	0.000195439	0.067444
7465041451	574650	4145130	0.070556677	0.000106947	0.070664

Max GLC for Chronic Calcs

Max GLC: 0.020647

XY	X	Y	2025	2026	2027	2034	2035
57449041452	574490	4145220	0.0004055	0.0015206	0		
57450041452	574500	4145220	0.0002762	0.0010357	0		
57451041452	574510	4145220	1.797E-05	6.751E-05	0		
57452041452	574520	4145220	1.986E-05	7.46E-05	0		
57453041452	574530	4145220	0.0007024	0.0026342	0		
57444041452	574440	4145230	0.0004481	0.0016805	0		
57445041452	574450	4145230	1.797E-05	6.753E-05	0		
57446041452	574460	4145230	1.989E-05	7.475E-05	0		
57447041452	574470	4145230	0.0011417	0.0042815	0		
57448041452	574480	4145230	0.0006257	0.0023466	0		
57449041452	574490	4145230	1.802E-05	6.773E-05	0		
57450041452	574500	4145230	1.978E-05	7.435E-05	0		
57451041452	574510	4145230	0.0050029	0.0187613	0		
57452041452	574520	4145230	0.0016314	0.0061181	0		
57444041452	574440	4145240	0.0007551	0.002832	0		
57445041452	574450	4145240	1.784E-05	6.707E-05	0		
57446041452	574460	4145240	1.959E-05	7.364E-05	0		
57447041452	574470	4145240	0.0055051	0.0206471	0		
57448041452	574480	4145240	0.0029788	0.0111714	0		
57449041452	574490	4145240	0.0015216	0.0057066	0		
57450041452	574500	4145240	0.000793	0.0029742	0		
57451041452	574510	4145240	1.759E-05	6.617E-05	0		
57445041452	574450	4145250	1.932E-05	7.265E-05	0		
57446041452	574460	4145250	0.0020907	0.0078447	0		
57447041452	574470	4145250	0.0015377	0.0057675	0		
57448041452	574480	4145250	0.0010193	0.003823	0		
57446041452	574460	4145260	0.0006571	0.0024646	0		
57447041452	574470	4145260	1.727E-05	6.499E-05	0		
57448041452	574480	4145260	1.898E-05	7.139E-05	0		
57447041452	574470	4145270	0.0008822	0.0033204	0		
57457041450	574570	4145030	0.0010731	0.0040272	0		
57463041450	574630	4145080	0.0010351	0.0038831	0		
57461041450	574610	4145090	0.0008227	0.0030859	0		
57462041450	574620	4145090	0.0005869	0.0022015	0		
57463041450	574630	4145090	1.695E-05	6.38E-05	0		
57464041450	574640	4145090	1.858E-05	6.992E-05	0		
57460041451	574600	4145100	2.057E-05	7.739E-05	0		
57461041451	574610	4145100	0.0004183	0.0015787	0		
57462041451	574620	4145100	0.0005495	0.0020681	0		
57463041451	574630	4145100	0.0006461	0.0024255	0		
57464041451	574640	4145100	0.0006544	0.0024556	0		
57465041451	574650	4145100	0.0005781	0.0021689	0		
57459041451	574590	4145110	0.0004656	0.0017465	0		
57460041451	574600	4145110	1.655E-05	6.232E-05	0		
57461041451	574610	4145110	1.812E-05	6.82E-05	0		
57462041451	574620	4145110	1.999E-05	7.524E-05	0		
57463041451	574630	4145110	0.0002322	0.0008733	0		
57464041451	574640	4145110	0.0003001	0.0011348	0		
57465041451	574650	4145110	0.0003731	0.0014065	0		
57466041451	574660	4145110	0.0004289	0.001611	0		
57460041451	574600	4145120	0.0004433	0.0016639	0		
57461041451	574610	4145120	0.0004143	0.0015546	0		
57462041451	574620	4145120	0.0003575	0.0013414	0		
57463041451	574630	4145120	1.614E-05	6.083E-05	0		
57464041451	574640	4145120	1.761E-05	6.634E-05	0		
57465041451	574650	4145120	1.935E-05	7.289E-05	0		
57466041451	574660	4145120	0.0001432	0.0005382	0		
57460041451	574600	4145130	0.0001816	0.0006836	0		
57462041451	574620	4145130	0.0002247	0.0008522	0		
57463041451	574630	4145130	0.0002689	0.0010156	0		
57464041451	574640	4145130	0.0003047	0.0011452	0		
57465041451	574650	4145130	0.0003197	0.0012003	0		

Garvey Reservoir Rehab - Mitigated Facility Electrical System

Cancer Risk Summary & Maximum Annual GLC for Chronic Calculations

Cancer Risk Summary

Max Risk: 1.215106

XY	X	Y	Offroad Risk	Haul Risk	Total Risk
7463041451	574630	4145140	0.067911872	7.57312E-05	0.067988
7464041451	574640	4145140	0.061387167	5.31845E-05	0.06144
7459041451	574590	4145150	0.003457821	2.7968E-05	0.003486
7460041451	574600	4145150	0.003762563	2.91623E-05	0.003792
7460041451	574600	4145160	0.004122359	3.02964E-05	0.004153
7461041451	574610	4145160	0.01754491	5.96647E-05	0.017605
7461041451	574610	4145170	0.021165668	7.57992E-05	0.021241
7457041450	574570	4145030	0.02592476	0.000109626	0.026034
7463041450	574630	4145080	0.031891698	0.000202796	0.032094
7461041450	574610	4145090	0.038383593	0.000759853	0.039143
7462041450	574620	4145090	0.044423936	0.000502607	0.044927
7463041450	574630	4145090	0.049771936	0.000192516	0.049964
7464041450	574640	4145090	0.051689364	0.000106259	0.051796
7460041451	574600	4145100	0.050289107	6.62274E-05	0.050355
7461041451	574610	4145100	0.047562556	4.7978E-05	0.047611
7462041451	574620	4145100	0.003348826	3.2525E-05	0.003381
7463041451	574630	4145100	0.003635773	3.42981E-05	0.00367
7464041451	574640	4145100	0.003966651	3.54414E-05	0.004002
7465041451	574650	4145100	0.004301423	3.41086E-05	0.004336
7459041451	574590	4145110	0.013068873	5.6439E-05	0.013125
7460041451	574600	4145110	0.015375014	6.60404E-05	0.015441
7461041451	574610	4145110	0.018177195	8.29797E-05	0.01826
7462041451	574620	4145110	0.021718986	0.00011848	0.021837
7463041451	574630	4145110	0.025851911	0.0002078	0.02606
7464041451	574640	4145110	0.030519247	0.000692152	0.031211
7465041451	574650	4145110	0.034705557	0.000484706	0.03519
7466041451	574660	4145110	0.038384705	0.000193902	0.038579
7460041451	574600	4145120	0.039482444	0.000103851	0.039586
7461041451	574610	4145120	0.039203838	6.699E-05	0.039271
7462041451	574620	4145120	0.037454352	4.7704E-05	0.037502
7463041451	574630	4145120	0.003209801	3.79568E-05	0.003248
7464041451	574640	4145120	0.003503977	4.11885E-05	0.003545
7465041451	574650	4145120	0.003789256	4.10413E-05	0.00383
7466041451	574660	4145120	0.003974437	3.95967E-05	0.004014
7460041451	574600	4145130	0.004316437	3.91454E-05	0.004356
7462041451	574620	4145130	0.006966247	4.82298E-05	0.007014
7463041451	574630	4145130	0.007868239	5.11227E-05	0.007919
7464041451	574640	4145130	0.008903694	5.55289E-05	0.008959
7465041451	574650	4145130	0.010224429	5.9609E-05	0.010284
7463041451	574630	4145140	0.011778168	6.55749E-05	0.011844
7464041451	574640	4145140	0.013558796	7.44917E-05	0.013633
7459041451	574590	4145150	0.015833239	9.35779E-05	0.015927
7460041451	574600	4145150	0.018463585	0.000132643	0.018596
7460041451	574600	4145160	0.021405347	0.00023199	0.021637
7461041451	574610	4145160	0.024614036	0.000739302	0.025353
7461041451	574610	4145170	0.027881671	0.000481367	0.028363
7457041450	574570	4145030	0.030456407	0.000193858	0.03065
7463041450	574630	4145080	0.031082018	0.000100818	0.031183
7461041450	574610	4145090	0.031142633	6.65064E-05	0.031209
7462041450	574620	4145090	0.030312934	4.81054E-05	0.030361
7463041450	574630	4145090	0.002952884	4.57509E-05	0.002999
7464041450	574640	4145090	0.003369957	5.18064E-05	0.003422
7460041451	574600	4145100	0.00348507	4.8683E-05	0.003534
7461041451	574610	4145100	0.003802602	4.89777E-05	0.003852
7462041451	574620	4145100	0.004286964	4.9852E-05	0.004337
7463041451	574630	4145100	0.004733511	5.08924E-05	0.004784
7464041451	574640	4145100	0.005245678	5.24629E-05	0.005298
7465041451	574650	4145100	0.005814011	5.53085E-05	0.005869
7459041451	574590	4145110	0.006481885	5.80413E-05	0.00654
7460041451	574600	4145110	0.007257643	6.22353E-05	0.00732
7461041451	574610	4145110	0.008165196	6.69563E-05	0.008232
7462041451	574620	4145110	0.009265715	7.11176E-05	0.009337

Max GLC for Chronic Calcs

Max GLC: 0.020647

XY	X	Y	2025	2026	2027	2034	2035
57463041451	574630	4145140	0.0003077	0.001155	0		
57464041451	574640	4145140	0.0002782	0.0010438	0		
57459041451	574590	4145150	1.567E-05	5.91E-05	0		
57460041451	574600	4145150	1.705E-05	6.43E-05	0		
57460041451	574600	4145160	1.868E-05	7.042E-05	0		
57461041451	574610	4145160	7.95E-05	0.0002989	0		
57461041451	574610	4145170	9.591E-05	0.0003606	0		
57457041450	574570	4145030	0.0001175	0.0004419	0		
57463041450	574630	4145080	0.0001445	0.0005444	0		
57461041450	574610	4145090	0.0001739	0.0006616	0		
57462041450	574620	4145090	0.0002013	0.0007611	0		
57463041450	574630	4145090	0.0002255	0.0008481	0		
57464041450	574640	4145090	0.0002342	0.0008797	0		
57460041451	574600	4145100	0.0002279	0.0008554	0		
57461041451	574610	4145100	0.0002155	0.0008088	0		
57462041451	574620	4145100	1.518E-05	5.731E-05	0		
57463041451	574630	4145100	1.648E-05	6.22E-05	0		
57464041451	574640	4145100	1.797E-05	6.784E-05	0		
57465041451	574650	4145100	1.949E-05	7.351E-05	0		
57459041451	574590	4145110	5.922E-05	0.0002228	0		
57460041451	574600	4145110	6.967E-05	0.0002621	0		
57461041451	574610	4145110	8.237E-05	0.0003099	0		
57462041451	574620	4145110	9.842E-05	0.0003705	0		
57463041451	574630	4145110	0.0001171	0.0004419	0		
57464041451	574640	4145110	0.0001383	0.0005271	0		
57465041451	574650	4145110	0.0001573	0.0005957	0		
57466041451	574660	4145110	0.0001739	0.0006547	0		
57460041451	574600	4145120	0.0001789	0.0006722	0		
57461041451	574610	4145120	0.0001777	0.000667	0		
57462041451	574620	4145120	0.0001697	0.000637	0		
57463041451	574630	4145120	1.455E-05	5.501E-05	0		
57464041451	574640	4145120	1.588E-05	6.005E-05	0		
57465041451	574650	4145120	1.717E-05	6.489E-05	0		
57466041451	574660	4145120	1.801E-05	6.802E-05	0		
57460041451	574600	4145130	1.956E-05	7.383E-05	0		
57462041451	574620	4145130	3.157E-05	0.000119	0		
57463041451	574630	4145130	3.565E-05	0.0001343	0		
57464041451	574640	4145130	4.035E-05	0.000152	0		
57465041451	574650	4145130	4.633E-05	0.0001745	0		
57463041451	574630	4145140	5.337E-05	0.000201	0		
57464041451	574640	4145140	6.144E-05	0.0002313	0		
57459041451	574590	4145150	7.175E-05	0.0002702	0		
57460041451	574600	4145150	8.367E-05	0.0003154	0		
57460041451	574600	4145160	9.7E-05	0.0003666	0		
57461041451	574610	4145160	0.0001115	0.0004273	0		
57461041451	574610	4145170	0.0001263	0.0004797	0		
57457041450	574570	4145030	0.000138	0.0005199	0		
57463041450	574630	4145080	0.0001408	0.0005294	0		
57461041450	574610	4145090	0.0001411	0.00053	0		
57462041450	574620	4145090	0.0001374	0.0005157	0		
57463041450	574630	4145090	1.338E-05	5.074E-05	0		
57464041450	574640	4145090	1.527E-05	5.79E-05	0		
57460041451	574600	4145100	1.579E-05	5.982E-05	0		
57461041451	574610	4145100	1.723E-05	6.522E-05	0		
57462041451	574620	4145100	1.943E-05	7.346E-05	0		
57463041451	574630	4145100	2.145E-05	8.106E-05	0		
57464041451	574640	4145100	2.377E-05	8.978E-05	0		
57465041451	574650	4145100	2.635E-05	9.948E-05	0		
57459041451	574590	4145110	2.937E-05	0.0001109	0		
57460041451	574600	4145110	3.289E-05	0.0001241	0		
57461041451	574610	4145110	3.7E-05	0.0001396	0		
57462041451	574620	4145110	4.199E-05	0.0001583	0		

Garvey Reservoir Rehab - Mitigated Facility Electrical System

Cancer Risk Summary & Maximum Annual GLC for Chronic Calculations

Cancer Risk Summary

Max Risk: 1.215106

XY	X	Y	Offroad Risk	Haul Risk	Total Risk
7463041451	574630	4145110	0.010538068	7.6729E-05	0.010615
7464041451	574640	4145110	0.011962237	8.51515E-05	0.012047
7465041451	574650	4145110	0.013511527	0.000102389	0.013614
7466041451	574660	4145110	0.015720351	0.000149792	0.01587
7460041451	574600	4145120	0.017986453	0.000295206	0.018282
7461041451	574610	4145120	0.020431062	0.001028314	0.021459
7462041451	574620	4145120	0.022823954	0.000433606	0.023258
7463041451	574630	4145120	0.024758065	0.000191041	0.024949
7464041451	574640	4145120	0.026056555	0.000111358	0.026168
7465041451	574650	4145120	0.025342525	6.61039E-05	0.025409
7466041451	574660	4145120	0.025028885	4.85744E-05	0.025077
7460041451	574600	4145130	0.002783273	5.89717E-05	0.002842
7462041451	574620	4145130	0.00323705	6.99544E-05	0.003307
7463041451	574630	4145130	0.003493411	7.26072E-05	0.003566
7464041451	574640	4145130	0.003787587	7.13619E-05	0.003859
7465041451	574650	4145130	0.004116798	7.22008E-05	0.004189
7463041451	574630	4145140	0.004496613	7.17187E-05	0.004568
7464041451	574640	4145140	0.004927033	7.29141E-05	0.005
7459041451	574590	4145150	0.005425298	7.39615E-05	0.005499
7460041451	574600	4145150	0.00600364	7.79647E-05	0.006082
7460041451	574600	4145160	0.006684305	8.2118E-05	0.006766
7461041451	574610	4145160	0.007462843	8.5664E-05	0.007549
7461041451	574610	4145170	0.008369284	8.93203E-05	0.008459
7457041450	574570	4145030	0.009425315	9.44209E-05	0.00952
7463041450	574630	4145080	0.010655961	0.000103572	0.01076
7461041450	574610	4145090	0.011848793	0.000120949	0.01197
7462041450	574620	4145090	0.013542669	0.000168659	0.013711
7463041450	574630	4145090	0.01535555	0.000382477	0.015738
7464041450	574640	4145090	0.01718011	0.001050563	0.018231
7460041451	574600	4145100	0.018972972	0.000351609	0.019325
7461041451	574610	4145100	0.020493901	0.000178003	0.020672
7462041451	574620	4145100	0.021557718	0.00011119	0.021669
7463041451	574630	4145100	0.022049865	7.58813E-05	0.022126
7464041451	574640	4145100	0.021925299	5.50735E-05	0.02198
7465041451	574650	4145100	0	0	0
7459041451	574590	4145110	0	0	0
7460041451	574600	4145110	0	0	0
7461041451	574610	4145110	0	0	0
7462041451	574620	4145110	0	0	0
7463041451	574630	4145110	0	0	0
7464041451	574640	4145110	0	0	0
7465041451	574650	4145110	0	0	0
7466041451	574660	4145110	0	0	0
7460041451	574600	4145120	0	0	0
7461041451	574610	4145120	0	0	0
7462041451	574620	4145120	0	0	0
7463041451	574630	4145120	0	0	0
7464041451	574640	4145120	0	0	0
7465041451	574650	4145120	0	0	0
7466041451	574660	4145120	0	0	0
7460041451	574600	4145130	0	0	0
7462041451	574620	4145130	0	0	0
7463041451	574630	4145130	0	0	0
7464041451	574640	4145130	0	0	0
7465041451	574650	4145130	0	0	0
7463041451	574630	4145140	0	0	0
7464041451	574640	4145140	0	0	0
7459041451	574590	4145150	0	0	0
7460041451	574600	4145150	0	0	0
7460041451	574600	4145160	0	0	0
7461041451	574610	4145160	0	0	0
7461041451	574610	4145170	0	0	0

Max GLC for Chronic Calcs

Max GLC: 0.020647

XY	X	Y	2025	2026	2027	2034	2035
57463041451	574630	4145110	4.775E-05	0.00018	0		
57464041451	574640	4145110	5.421E-05	0.0002043	0		
57465041451	574650	4145110	6.123E-05	0.0002309	0		
57466041451	574660	4145110	7.124E-05	0.000269	0		
57460041451	574600	4145120	8.151E-05	0.0003093	0		
57461041451	574610	4145120	9.258E-05	0.0003598	0		
57462041451	574620	4145120	0.0001034	0.0003932	0		
57463041451	574630	4145120	0.0001122	0.0004231	0		
57464041451	574640	4145120	0.0001181	0.0004441	0		
57465041451	574650	4145120	0.0001148	0.0004315	0		
57466041451	574660	4145120	0.0001134	0.0004259	0		
57460041451	574600	4145130	1.261E-05	4.802E-05	0		
57462041451	574620	4145130	1.467E-05	5.587E-05	0		
57463041451	574630	4145130	1.583E-05	6.026E-05	0		
57464041451	574640	4145130	1.716E-05	6.524E-05	0		
57465041451	574650	4145130	1.866E-05	7.084E-05	0		
57463041451	574630	4145140	2.038E-05	7.729E-05	0		
57464041451	574640	4145140	2.233E-05	8.462E-05	0		
57459041451	574590	4145150	2.458E-05	9.31E-05	0		
57460041451	574600	4145150	2.721E-05	0.000103	0		
57460041451	574600	4145160	3.029E-05	0.0001146	0		
57461041451	574610	4145160	3.382E-05	0.0001279	0		
57461041451	574610	4145170	3.793E-05	0.0001433	0		
57457041450	574570	4145030	4.271E-05	0.0001613	0		
57463041450	574630	4145080	4.829E-05	0.0001823	0		
57461041450	574610	4145090	5.369E-05	0.0002028	0		
57462041450	574620	4145090	6.137E-05	0.0002322	0		
57463041450	574630	4145090	6.958E-05	0.0002656	0		
57464041450	574640	4145090	7.785E-05	0.0003048	0		
57460041451	574600	4145100	8.598E-05	0.0003267	0		
57461041451	574610	4145100	9.287E-05	0.0003504	0		
57462041451	574620	4145100	9.769E-05	0.0003677	0		
57463041451	574630	4145100	9.992E-05	0.0003756	0		
57464041451	574640	4145100	9.935E-05	0.0003733	0		
57465041451	574650	4145100	0	0	0		
57459041451	574590	4145110	0	0	0		
57460041451	574600	4145110	0	0	0		
57461041451	574610	4145110	0	0	0		
57462041451	574620	4145110	0	0	0		
57463041451	574630	4145110	0	0	0		
57464041451	574640	4145110	0	0	0		
57465041451	574650	4145110	0	0	0		
57466041451	574660	4145110	0	0	0		
57460041451	574600	4145120	0	0	0		
57461041451	574610	4145120	0	0	0		
57462041451	574620	4145120	0	0	0		
57463041451	574630	4145120	0	0	0		
57464041451	574640	4145120	0	0	0		
57465041451	574650	4145120	0	0	0		
57466041451	574660	4145120	0	0	0		
57460041451	574600	4145130	0	0	0		
57462041451	574620	4145130	0	0	0		
57463041451	574630	4145130	0	0	0		
57464041451	574640	4145130	0	0	0		
57465041451	574650	4145130	0	0	0		
57463041451	574630	4145140	0	0	0		
57464041451	574640	4145140	0	0	0		
57459041451	574590	4145150	0	0	0		
57460041451	574600	4145150	0	0	0		
57460041451	574600	4145160	0	0	0		
57461041451	574610	4145160	0	0	0		
57461041451	574610	4145170	0	0	0		

Garvey Reservoir Rehab - Mitigated Facility Electrical System

Construction Modeling Assumptions

AERMOD Sources

Volume Sources		
Offroad Construction Exhaust		
Release Height	3.66	m
Emissions rate	1	g/s
Init Vert Dimension	3.4	m
Line Volume		
Onroad Hauling Exhaust		
Plume Height	7.315	m
Plume Width	20	m
Release Height	3.66	m
Emissions rate	1	g/s

Meteorology:

SCAQMD	Pico	Rivera	2010 - 2012, 2015 - 2016

SCAQMD Met Data

https://www.aqmd.gov/home/air-quality/meteorological-data/data-for-aermod

AERMOD Sources

Garvey Reservoir Rehab - Mitigated Facility Electrical System

Health Risk Assessment Risk Factors

Residential Risk	Abbreviation	UOM	3rd Trimester	0<2	2<16	16<30
Daily Breathing Rate (95th %'ile)	DBR	L/kg-day	361	1090	572	261
Fraction Of Time At Home [a]	FAH	unitless	1	1	1	0.73
Exposure Frequency	EF	days/year	0.96	0.96	0.96	0.96
Age Sensitivity Factor	ASF	unitless	10	10	3	1
Inhalation Absorption Factor	A	unitless	1	1	1	1
Conversion Factor	CF_1	m^3/L	0.001	0.001	0.001	0.001
Conversion Factor	CF_2	$\mu g/m^3$	0.001	0.001	0.001	0.001
Cancer Potency Factor (diesel exhaust)	CPF	$mg/kg\text{-}day^{-1}$	1.1	1.1	1.1	1.1
Averaging Time (for residential exposure)	AT	years	70.00	70.00	70.00	70.00

[a] assume school or daycare will have cancer risk of >1 per million

Garvey Reservoir Rehab - Mitigated Facility Electrical System

Health Risk Assessment Exposure Duration Assumptions for Offroad Equipment

Residential Receptors

			Start Date	*9/30/2025*	*12/30/2025*
			End Date	*12/29/2025*	*12/30/2027*
	9/30/2025	*1/31/2027*	*Days*	*90*	*730*
Phase	Start Date	End Date	Duration (days)	3rd Tri	0<2
Demolition - 2025			1	0	0
Demolition - 2026			1	0	0
Site Preparation - 2025	9/30/2025	12/20/2025	82	82	0
Site Preparation - 2026			1	0	0
Grading - 2025	1/1/2026	1/31/2026	31	0	31
Grading - 2026			1	0	0
Infrastructure - 2025	2/1/2026	7/31/2026	181	0	181
Infrastructure - 2026			1	0	0
Paving - 2025	11/1/2026	1/31/2027	92	0	92
Architectural Coating - 2026			1	0	0

			Intake Factor for Inhalation, IF (m^3/kg-day)			Risk Calculation Part 1, R1		
Phase	Year	Year	Equation	3rd Trimester	0<2	Equation	3rd Trimester	0<2
Demolition - 2025		1900		0	0		0	0
Demolition - 2026		1900	$\frac{DBR \cdot FAH \cdot EF \cdot ED \cdot ASF \cdot A \cdot CF_1}{AT}$	0	0		0	0
Site Preparation - 2025		2025		0.011109777	0		1.22208E-05	0
Site Preparation - 2026		1900		0	0	$IF \cdot CPF \cdot CF_2$	0	0
Grading - 2025		2026		0	0.012681554		0	1.39497E-05
Grading - 2026		1900		0	0		0	0
Infrastructure - 2025		2026		0	0.074043911		0	8.14483E-05
Infrastructure - 2026		1900		0	0		0	0
Paving - 2025		2026		0	0.037635579		0	4.13991E-05
Architectural Coating - 2026		1900		0	0		0	0

Exposure Durations

Garvey Reservoir Rehab - Mitigated Facility Electrical System

Offroad DPM Emissions, Ground Level Concentrations and Health Risk Calculations

Residential Receptors

Phase	Year	Emissions (lbs/day)	Work Hours Per Day	Emissions (g/s)
Demolition - 2025	1900		10	0
Demolition - 2026	1900		10	0
Site Preparation - 2025	2025	0.020	10	0.000251994
Site Preparation - 2026	1900		10	0
Grading - 2025	2026	0.005	10	6.29986E-05
Grading - 2026	1900		10	0
Infrastructure - 2025	2026	0.030	10	0.000377992
Infrastructure - 2026	1900		10	0
Paving - 2025	2026	0.040	10	0.000503989
Architectural Coating - 2026	1900		10	0

		AERMOD Column Identifier:	*4*	*4*	*4*	*4*	*4*	*4*	*4*	*4*	*4*	*4*				
Garvey Reservoir Rehab - Mitigated Facility Electrical System			Demolition - 2025	Demolition - 2026	ite Preparation - 202	ite Preparation - 202	Grading - 2025	Grading - 2026	nfrastructure - 202	nfrastructure - 202	Paving - 2025	itectural Coating -	Child Risk			
Unique Identifier	X (UTM)	Y (UTM)	1900	1900	2025	1900	2026	1900	2026	1900	2026	1900	3rd Trimester	0<2	Total	per million
396166.283767377.2	396166.28	3767377	0	0	9.88574E-06	0	2.47144E-06	0	1.48286E-05	0	1.97715E-05	0	1.20811E-10	2.06076E-09	2.18157E-09	0.0021816
396266.283767377.2	396266.28	3767377	0	0	1.09416E-05	0	2.7354E-06	0	1.64124E-05	0	2.18832E-05	0	1.33715E-10	2.28087E-09	2.41458E-09	0.0024146
396366.283767377.2	396366.28	3767377	0	0	1.2514E-05	0	3.12851E-06	0	1.87711E-05	0	2.50281E-05	0	1.52931E-10	2.60865E-09	2.76159E-09	0.0027616
396466.283767377.2	396466.28	3767377	0	0	1.41646E-05	0	3.54115E-06	0	2.12469E-05	0	2.83292E-05	0	1.73102E-10	2.95273E-09	3.12583E-09	0.0031258
396566.283767377.2	396566.28	3767377	0	0	1.61982E-05	0	4.04955E-06	0	2.42973E-05	0	3.23964E-05	0	1.97954E-10	3.37665E-09	3.5746E-09	0.0035746
396666.283767377.2	396666.28	3767377	0	0	1.801E-05	0	4.50251E-06	0	2.70151E-05	0	3.60201E-05	0	2.20096E-10	3.75434E-09	3.97444E-09	0.0039744
396766.283767377.2	396766.28	3767377	0	0	1.96001E-05	0	4.90003E-06	0	2.94002E-05	0	3.92003E-05	0	2.39528E-10	4.08581E-09	4.32533E-09	0.0043253
396866.283767377.2	396866.28	3767377	0	0	2.13061E-05	0	5.32653E-06	0	3.19592E-05	0	4.26123E-05	0	2.60377E-10	4.44144E-09	4.70181E-09	0.0047018
396966.283767377.2	396966.28	3767377	0	0	2.33876E-05	0	5.8469E-06	0	3.50814E-05	0	4.67752E-05	0	2.85814E-10	4.87534E-09	5.16115E-09	0.0051612
397066.283767377.2	397066.28	3767377	0	0	2.47383E-05	0	6.18457E-06	0	3.71074E-05	0	4.94766E-05	0	3.02321E-10	5.1569E-09	5.45922E-09	0.0054592
397166.283767377.2	397166.28	3767377	0	0	2.51339E-05	0	6.28348E-06	0	3.77009E-05	0	5.02679E-05	0	3.07156E-10	5.23937E-09	5.54653E-09	0.0055465
397266.283767377.2	397266.28	3767377	0	0	2.47635E-05	0	6.19087E-06	0	3.71452E-05	0	4.9527E-05	0	3.02629E-10	5.16215E-09	5.46478E-09	0.0054648
397366.283767377.2	397366.28	3767377	0	0	2.47559E-05	0	6.18898E-06	0	3.71339E-05	0	4.95119E-05	0	3.02536E-10	5.16058E-09	5.46311E-09	0.0054631
397466.283767377.2	397466.28	3767377	0	0	2.42293E-05	0	6.05732E-06	0	3.63439E-05	0	4.84585E-05	0	2.961E-10	5.05079E-09	5.34689E-09	0.0053469
397566.283767377.2	397566.28	3767377	0	0	2.29517E-05	0	5.73791E-06	0	3.44275E-05	0	4.59033E-05	0	2.80487E-10	4.78446E-09	5.06495E-09	0.0050649
397666.283767377.2	397666.28	3767377	0	0	2.13238E-05	0	5.33094E-06	0	3.19857E-05	0	4.26475E-05	0	2.60593E-10	4.44511E-09	4.70571E-09	0.0047057
397766.283767377.2	397766.28	3767377	0	0	1.90936E-05	0	4.7734E-06	0	2.86404E-05	0	3.81872E-05	0	2.33338E-10	3.98022E-09	4.21356E-09	0.0042136
397866.283767377.2	397866.28	3767377	0	0	1.71533E-05	0	4.28832E-06	0	2.57299E-05	0	3.43065E-05	0	2.09626E-10	3.57574E-09	3.78536E-09	0.0037854
396166.283767477.2	396166.28	3767477	0	0	1.04351E-05	0	2.60877E-06	0	1.56526E-05	0	2.08702E-05	0	1.27525E-10	2.17528E-09	2.3028E-09	0.0023028
396266.283767477.2	396266.28	3767477	0	0	1.15136E-05	0	2.87841E-06	0	1.72704E-05	0	2.30273E-05	0	1.40705E-10	2.40011E-09	2.54081E-09	0.0025408
396366.283767477.2	396366.28	3767477	0	0	1.33885E-05	0	3.34712E-06	0	2.00827E-05	0	2.67769E-05	0	1.63617E-10	2.79093E-09	2.95455E-09	0.0029546
396466.283767477.2	396466.28	3767477	0	0	1.54674E-05	0	3.86685E-06	0	2.32011E-05	0	3.09348E-05	0	1.89024E-10	3.22431E-09	3.41333E-09	0.0034133
396566.283767477.2	396566.28	3767477	0	0	1.78488E-05	0	4.46219E-06	0	2.67731E-05	0	3.56975E-05	0	2.18125E-10	3.72072E-09	3.93885E-09	0.0039388
396666.283767477.2	396666.28	3767477	0	0	2.03788E-05	0	5.0947E-06	0	3.05682E-05	0	4.07576E-05	0	2.49044E-10	4.24813E-09	4.49717E-09	0.0044972
396766.283767477.2	396766.28	3767477	0	0	2.30751E-05	0	5.76878E-06	0	3.46127E-05	0	4.61503E-05	0	2.81996E-10	4.8102E-09	5.09219E-09	0.0050922
396866.283767477.2	396866.28	3767477	0	0	2.5963E-05	0	6.49075E-06	0	3.89445E-05	0	5.1926E-05	0	3.17287E-10	5.4122E-09	5.72948E-09	0.0057295
396966.283767477.2	396966.28	3767477	0	0	2.93901E-05	0	7.34753E-06	0	4.40852E-05	0	5.87802E-05	0	3.59169E-10	6.12661E-09	6.48578E-09	0.0064858
397066.283767477.2	397066.28	3767477	0	0	3.2031E-05	0	8.00775E-06	0	4.80465E-05	0	6.4062E-05	0	3.91443E-10	6.67713E-09	7.06857E-09	0.0070686
397166.283767477.2	397166.28	3767477	0	0	3.32481E-05	0	8.31204E-06	0	4.98722E-05	0	6.64963E-05	0	4.06317E-10	6.93085E-09	7.33716E-09	0.0073372
397266.283767477.2	397266.28	3767477	0	0	3.31247E-05	0	8.28117E-06	0	4.9687E-05	0	6.62493E-05	0	4.04808E-10	6.90511E-09	7.30992E-09	0.0073099
397366.283767477.2	397366.28	3767477	0	0	3.26383E-05	0	8.15958E-06	0	4.89575E-05	0	6.52766E-05	0	3.98865E-10	6.80372E-09	7.20259E-09	0.0072026
397466.283767477.2	397466.28	3767477	0	0	3.17841E-05	0	7.94601E-06	0	4.76761E-05	0	6.35681E-05	0	3.88425E-10	6.62565E-09	7.01407E-09	0.0070141
397566.283767477.2	397566.28	3767477	0	0	2.96774E-05	0	7.41935E-06	0	4.45161E-05	0	5.93548E-05	0	3.6268E-10	6.18649E-09	6.54917E-09	0.0065492
397666.283767477.2	397666.28	3767477	0	0	2.68954E-05	0	6.72384E-06	0	4.03431E-05	0	5.37907E-05	0	3.28682E-10	5.60656E-09	5.93524E-09	0.0059352
397766.283767477.2	397766.28	3767477	0	0	2.38538E-05	0	5.96345E-06	0	3.57807E-05	0	4.77076E-05	0	2.91511E-10	4.97252E-09	5.26403E-09	0.005264
397866.283767477.2	397866.28	3767477	0	0	2.08954E-05	0	5.22384E-06	0	3.13431E-05	0	4.17908E-05	0	2.55357E-10	4.35581E-09	4.61117E-09	0.0046112
396166.283767577.2	396166.28	3767577	0	0	1.07778E-05	0	2.69445E-06	0	1.61667E-05	0	2.15556E-05	0	1.31713E-10	2.24672E-09	2.37843E-09	0.0023784
396266.283767577.2	396266.28	3767577	0	0	1.21209E-05	0	3.03023E-06	0	1.81814E-05	0	2.42419E-05	0	1.48127E-10	2.52671E-09	2.67483E-09	0.0026748
396366.283767577.2	396366.28	3767577	0	0	1.40386E-05	0	3.50965E-06	0	2.10579E-05	0	2.80772E-05	0	1.71562E-10	2.92646E-09	3.09803E-09	0.003098
396466.283767577.2	396466.28	3767577	0	0	1.65182E-05	0	4.12956E-06	0	2.47774E-05	0	3.30365E-05	0	2.01865E-10	3.44336E-09	3.64523E-09	0.0036452
396566.283767577.2	396566.28	3767577	0	0	1.96052E-05	0	4.90129E-06	0	2.94078E-05	0	3.92103E-05	0	2.3959E-10	4.08686E-09	4.32645E-09	0.0043264

Garvey Reservoir Rehab - Mitigated Facility Electrical System			Demolition - 2025	Demolition - 2026	ite Preparation - 202	te Preparation - 202	Grading - 2025	Grading - 2026	nfrastructure - 202	nfrastructure - 202	Paving - 2025	itectural Coating -	Child Risk			
Unique Identifier	X (UTM)	Y (UTM)	1900	1900	2025	1900	2026	1900	2026	1900	2026	1900	3rd Trimester	0<2	Total	per million
396666.283767577.2	396666.28	3767577	0	0	2.33196E-05	0	5.82989E-06	0	3.49793E-05	0	4.66391E-05	0	2.84983E-10	4.86115E-09	5.14614E-09	0.0051461
396766.283767577.2	396766.28	3767577	0	0	2.67316E-05	0	6.68289E-06	0	4.00974E-05	0	5.34631E-05	0	3.2668E-10	5.57241E-09	5.89909E-09	0.0058991
396866.283767577.2	396866.28	3767577	0	0	3.19756E-05	0	7.99389E-06	0	4.79634E-05	0	6.39512E-05	0	3.90766E-10	6.66557E-09	7.05633E-09	0.0070563
396966.283767577.2	396966.28	3767577	0	0	3.74035E-05	0	9.35088E-06	0	5.61053E-05	0	7.48071E-05	0	4.57099E-10	7.79707E-09	8.25417E-09	0.0082542
397066.283767577.2	397066.28	3767577	0	0	4.24233E-05	0	1.06058E-05	0	6.36349E-05	0	8.48465E-05	0	5.18444E-10	8.84348E-09	9.36192E-09	0.0093619
397166.283767577.2	397166.28	3767577	0	0	4.59335E-05	0	1.14834E-05	0	6.89003E-05	0	9.18671E-05	0	5.61343E-10	9.57522E-09	1.01366E-08	0.0101366
397266.283767577.2	397266.28	3767577	0	0	4.67324E-05	0	1.16831E-05	0	7.00986E-05	0	9.34647E-05	0	5.71105E-10	9.74174E-09	1.03128E-08	0.0103128
397366.283767577.2	397366.28	3767577	0	0	4.5732E-05	0	1.1433E-05	0	6.85979E-05	0	9.14639E-05	0	5.58879E-10	9.5332E-09	1.00921E-08	0.0100921
397466.283767577.2	397466.28	3767577	0	0	4.40259E-05	0	1.10065E-05	0	6.60389E-05	0	8.80519E-05	0	5.3803E-10	9.17757E-09	9.7156E-09	0.0097156
397566.283767577.2	397566.28	3767577	0	0	4.00016E-05	0	1.00004E-05	0	6.00024E-05	0	8.00032E-05	0	4.8885E-10	8.33866E-09	8.82751E-09	0.0088275
397666.283767577.2	397666.28	3767577	0	0	3.50776E-05	0	8.76941E-06	0	5.26164E-05	0	7.01553E-05	0	4.28675E-10	7.31222E-09	7.74089E-09	0.0077409
397766.283767577.2	397766.28	3767577	0	0	3.0005E-05	0	7.50124E-06	0	4.50075E-05	0	6.001E-05	0	3.66683E-10	6.25478E-09	6.62147E-09	0.0066215
397866.283767577.2	397866.28	3767577	0	0	2.53884E-05	0	6.34711E-06	0	3.80827E-05	0	5.07769E-05	0	3.10266E-10	5.29243E-09	5.60269E-09	0.0056027
396166.283767677.2	396166.28	3767677	0	0	1.1186E-05	0	2.79651E-06	0	1.67791E-05	0	2.23721E-05	0	1.36702E-10	2.33182E-09	2.46852E-09	0.0024685
396266.283767677.2	396266.28	3767677	0	0	1.26879E-05	0	3.17198E-06	0	1.90319E-05	0	2.53758E-05	0	1.55056E-10	2.6449E-09	2.79996E-09	0.0028
396366.283767677.2	396366.28	3767677	0	0	1.48475E-05	0	3.71188E-06	0	2.22713E-05	0	2.9695E-05	0	1.81448E-10	3.09509E-09	3.27653E-09	0.0032765
396466.283767677.2	396466.28	3767677	0	0	1.77076E-05	0	4.42691E-06	0	2.65615E-05	0	3.54153E-05	0	2.16401E-10	3.6913E-09	3.9077E-09	0.0039077
396566.283767677.2	396566.28	3767677	0	0	2.1228E-05	0	5.307E-06	0	3.1842E-05	0	4.2456E-05	0	2.59422E-10	4.42515E-09	4.68457E-09	0.0046846
396666.283767677.2	396666.28	3767677	0	0	2.51692E-05	0	6.2923E-06	0	3.77538E-05	0	5.03384E-05	0	3.07587E-10	5.24673E-09	5.55431E-09	0.0055543
396766.283767677.2	396766.28	3767677	0	0	3.12448E-05	0	7.8112E-06	0	4.68672E-05	0	6.24896E-05	0	3.81835E-10	6.51323E-09	6.89507E-09	0.0068951
396866.283767677.2	396866.28	3767677	0	0	3.97093E-05	0	9.92732E-06	0	5.95639E-05	0	7.94186E-05	0	4.85277E-10	8.27772E-09	8.763E-09	0.008763
396966.283767677.2	396966.28	3767677	0	0	4.97059E-05	0	1.24265E-05	0	7.45589E-05	0	9.94118E-05	0	6.07444E-10	1.03616E-08	1.0969E-08	0.010969
397066.283767677.2	397066.28	3767677	0	0	5.92086E-05	0	1.48022E-05	0	8.88129E-05	0	0.000118417	0	7.23574E-10	1.23425E-08	1.30661E-08	0.0130661
397166.283767677.2	397166.28	3767677	0	0	6.72523E-05	0	1.68131E-05	0	0.000100878	0	0.000134505	0	8.21874E-10	1.40193E-08	1.48412E-08	0.0148412
397266.283767677.2	397266.28	3767677	0	0	7.19797E-05	0	1.79949E-05	0	0.00010797	0	0.000143959	0	8.79646E-10	1.50048E-08	1.58844E-08	0.0158844
397366.283767677.2	397366.28	3767677	0	0	7.00318E-05	0	1.75079E-05	0	0.000105048	0	0.000140064	0	8.55841E-10	1.45987E-08	1.54545E-08	0.0154545
397466.283767677.2	397466.28	3767677	0	0	6.5579E-05	0	1.63948E-05	0	9.83686E-05	0	0.000131158	0	8.01425E-10	1.36705E-08	1.44719E-08	0.0144719
397566.283767677.2	397566.28	3767677	0	0	5.69306E-05	0	1.42326E-05	0	8.53959E-05	0	0.000113861	0	6.95735E-10	1.18676E-08	1.25634E-08	0.0125634
397666.283767677.2	397666.28	3767677	0	0	4.72263E-05	0	1.18066E-05	0	7.08394E-05	0	9.44526E-05	0	5.77141E-10	9.8447E-09	1.04218E-08	0.0104218
397766.283767677.2	397766.28	3767677	0	0	3.83208E-05	0	9.5802E-06	0	5.74812E-05	0	7.66416E-05	0	4.68309E-10	7.98828E-09	8.45659E-09	0.0084566
397866.283767677.2	397866.28	3767677	0	0	3.09122E-05	0	7.72804E-06	0	4.63682E-05	0	6.18243E-05	0	3.7777E-10	6.44389E-09	6.82166E-09	0.0068217
396166.283767777.2	396166.28	3767777	0	0	1.14607E-05	0	2.86518E-06	0	1.71911E-05	0	2.29214E-05	0	1.40058E-10	2.38908E-09	2.52914E-09	0.0025291
396266.283767777.2	396266.28	3767777	0	0	1.32826E-05	0	3.32066E-06	0	1.99239E-05	0	2.65653E-05	0	1.62324E-10	2.76887E-09	2.9312E-09	0.0029312
396366.283767777.2	396366.28	3767777	0	0	1.55229E-05	0	3.88071E-06	0	2.32843E-05	0	3.10457E-05	0	1.89701E-10	3.23587E-09	3.42557E-09	0.0034256
396466.283767777.2	396466.28	3767777	0	0	1.85493E-05	0	4.63733E-06	0	2.7824E-05	0	3.70986E-05	0	2.26687E-10	3.86676E-09	4.09344E-09	0.0040934
396566.283767777.2	396566.28	3767777	0	0	2.22813E-05	0	5.57034E-06	0	3.3422E-05	0	4.45627E-05	0	2.72295E-10	4.64473E-09	4.91702E-09	0.004917
396666.283767777.2	396666.28	3767777	0	0	2.76161E-05	0	6.90402E-06	0	4.14241E-05	0	5.52321E-05	0	3.37489E-10	5.7568E-09	6.09428E-09	0.0060943
396766.283767777.2	396766.28	3767777	0	0	3.60377E-05	0	9.00943E-06	0	5.40566E-05	0	7.20755E-05	0	4.40408E-10	7.51236E-09	7.95277E-09	0.0079528
396866.283767777.2	396866.28	3767777	0	0	4.80654E-05	0	1.20164E-05	0	7.20981E-05	0	9.61308E-05	0	5.87396E-10	1.00196E-08	1.0607E-08	0.010607
396966.283767777.2	396966.28	3767777	0	0	6.44955E-05	0	1.61239E-05	0	9.67432E-05	0	0.000128991	0	7.88183E-10	1.34446E-08	1.42328E-08	0.0142328
397066.283767777.2	397066.28	3767777	0	0	8.52195E-05	0	2.13049E-05	0	0.000127829	0	0.000170439	0	1.04145E-09	1.77647E-08	1.88061E-08	0.0188061
397166.283767777.2	397166.28	3767777	0	0	0.00010651	0	2.66276E-05	0	0.000159766	0	0.000213021	0	1.30164E-09	2.2203E-08	2.35046E-08	0.0235046
397266.283767777.2	397266.28	3767777	0	0	0.000122316	0	3.05789E-05	0	0.000183473	0	0.000244631	0	1.49479E-09	2.54977E-08	2.69925E-08	0.0269925
397366.283767777.2	397366.28	3767777	0	0	0.000121733	0	3.04334E-05	0	0.0001826	0	0.000243467	0	1.48767E-09	2.53763E-08	2.6864E-08	0.026864
397466.283767777.2	397466.28	3767777	0	0	0.000105412	0	2.63529E-05	0	0.000158118	0	0.000210824	0	1.28821E-09	2.19739E-08	2.32622E-08	0.0232622
397566.283767777.2	397566.28	3767777	0	0	8.45593E-05	0	2.11398E-05	0	0.000126839	0	0.000169119	0	1.03338E-09	1.76271E-08	1.86604E-08	0.0186604
397666.283767777.2	397666.28	3767777	0	0	6.56597E-05	0	1.64149E-05	0	9.84895E-05	0	0.000131319	0	8.02411E-10	1.36873E-08	1.44897E-08	0.0144897
397766.283767777.2	397766.28	3767777	0	0	4.94363E-05	0	1.23591E-05	0	7.41544E-05	0	9.88725E-05	0	6.04149E-10	1.03054E-08	1.09095E-08	0.0109095
397866.283767777.2	397866.28	3767777	0	0	3.77714E-05	0	9.44286E-06	0	5.66572E-05	0	7.55429E-05	0	4.61596E-10	7.87377E-09	8.33536E-09	0.0083354
396166.283767877.2	396166.28	3767877	0	0	1.16346E-05	0	2.90865E-06	0	1.74519E-05	0	2.32692E-05	0	1.42183E-10	2.42532E-09	2.56751E-09	0.0025675
396266.283767877.2	396266.28	3767877	0	0	1.35523E-05	0	3.38807E-06	0	2.03284E-05	0	2.71045E-05	0	1.65619E-10	2.82508E-09	2.9907E-09	0.0029907
396366.283767877.2	396366.28	3767877	0	0	1.59991E-05	0	3.99978E-06	0	2.39987E-05	0	3.19983E-05	0	1.95521E-10	3.33515E-09	3.53067E-09	0.0035307
396466.283767877.2	396466.28	3767877	0	0	1.91339E-05	0	4.78348E-06	0	2.87009E-05	0	3.82679E-05	0	2.33831E-10	3.98863E-09	4.22246E-09	0.0042225
396566.283767877.2	396566.28	3767877	0	0	2.33296E-05	0	5.83241E-06	0	3.49945E-05	0	4.66593E-05	0	2.85106E-10	4.86325E-09	5.14836E-09	0.0051484
397466.283767877.2	397466.28	3767877	0	0	0.000207386	0	5.18466E-05	0	0.00031108	0	0.000414773	0	2.53442E-09	4.32314E-08	4.57658E-08	0.0457658
397566.283767877.2	397566.28	3767877	0	0	0.000133479	0	3.33697E-05	0	0.000200218	0	0.000266958	0	1.63121E-09	2.78248E-08	2.9456E-08	0.029456
397666.283767877.2	397666.28	3767877	0	0	8.18528E-05	0	2.04632E-05	0	0.000122779	0	0.000163706	0	1.0003E-09	1.70629E-08	1.80632E-08	0.0180632
397766.283767877.2	397766.28	3767877	0	0	5.68474E-05	0	1.42119E-05	0	8.52711E-05	0	0.000113695	0	6.94718E-10	1.18503E-08	1.2545E-08	0.012545
397866.283767877.2	397866.28	3767877	0	0	4.5364E-05	0	1.1341E-05	0	6.80461E-05	0	9.07281E-05	0	5.54383E-10	9.4565E-09	1.00109E-08	0.0100109
396166.283767977.2	396166.28	3767977	0	0	1.16472E-05	0	2.9118E-06	0	1.74708E-05	0	2.32944E-05	0	1.42337E-10	2.42795E-09	2.57029E-09	0.0025703
396266.283767977.2	396266.28	3767977	0	0	1.36379E-05	0	3.40948E-06	0	2.04569E-05	0	2.72759E-05	0	1.66666E-10	2.84294E-09	3.00961E-09	0.0030096
396366.283767977.2	396366.28	3767977	0	0	1.61629E-05	0	4.04073E-06	0	2.42444E-05	0	3.23258E-05	0	1.97523E-10	3.36929E-09	3.56682E-09	0.0035668
396466.283767977.2	396466.28	3767977	0	0	1.93733E-05	0	4.84333E-06	0	2.906E-05	0	3.87467E-05	0	2.36757E-10	4.03853E-09	4.27529E-09	0.0042753
397466.283767977.2	397466.28	3767977	0	0	0.000402866	0	0.000100717	0	0.000604299	0	0.000805732	0	4.92333E-09	8.39807E-08	8.8904E-08	0.088904
397566.283767977.2	397566.28	3767977	0	0	0.000192584	0	4.81461E-05	0	0.000288876	0	0.000385168	0	2.35352E-09	4.01458E-08	4.24993E-08	0.0424993
397666.283767977.2	397666.28	3767977	0	0	0.000106042	0	2.65104E-05	0	0.000159063	0	0.000212084	0	1.29591E-09	2.21053E-08	2.34012E-08	0.0234012
397766.283767977.2	397766.28	3767977	0	0	7.90683E-05	0	1.97671E-05	0	0.000118602	0	0.000158137	0	9.66274E-10	1.64824E-08	1.74487E-08	0.0174487
397866.283767977.2	397866.28	3767977	0	0	5.23292E-05	0	1.30823E-05	0	7.84937E-05	0	0.000104658	0	6.39502E-10	1.09084E-08	1.15479E-08	0.0115479
396166.283768077.2	396166.28	3768077	0	0	1.17455E-05	0	2.93637E-06	0	1.76182E-05	0	2.34909E-05	0	1.43538E-10	2.44844E-09	2.59198E-09	0.002592

Garvey Reservoir Rehab - Mitigated Facility Electrical System			Demolition - 2025	Demolition - 2026	ite Preparation - 202	te Preparation - 202	Grading - 2025	Grading - 2026	nfrastructure - 202	nfrastructure - 202	Paving - 2025	itectural Coating -	Child Risk			
Unique Identifier	X (UTM)	Y (UTM)	1900	1900	2025	1900	2026	1900	2026	1900	2026	1900	3rd Trimester	0<2	Total	per million
396266.283768077.2	396266.28	3768077	0	0	1.35901E-05	0	3.39752E-06	0	2.03851E-05	0	2.71801E-05	0	1.66081E-10	2.83296E-09	2.99904E-09	0.002999
396366.283768077.2	396366.28	3768077	0	0	1.6115E-05	0	4.02876E-06	0	2.41726E-05	0	3.22301E-05	0	1.96938E-10	3.35931E-09	3.55625E-09	0.0035563
396466.283768077.2	396466.28	3768077	0	0	1.95472E-05	0	4.8868E-06	0	2.93208E-05	0	3.90944E-05	0	2.38882E-10	4.07478E-09	4.31366E-09	0.0043137
397466.283768077.2	397466.28	3768077	0	0	0.001188454	0	0.000297113	0	0.001782681	0	0.002376907	0	1.45238E-08	2.47743E-07	2.62267E-07	0.2622667
397566.283768077.2	397566.28	3768077	0	0	0.000379196	0	9.47991E-05	0	0.000568794	0	0.000758392	0	4.63406E-09	7.90465E-08	8.36806E-08	0.0836806
397666.283768077.2	397666.28	3768077	0	0	0.000170056	0	4.2514E-05	0	0.000255084	0	0.000340112	0	2.07821E-09	3.54495E-08	3.75278E-08	0.0375278
397766.283768077.2	397766.28	3768077	0	0	9.55487E-05	0	2.38872E-05	0	0.000143323	0	0.000191097	0	1.16768E-09	1.99179E-08	2.10856E-08	0.0210856
397866.283768077.2	397866.28	3768077	0	0	6.05921E-05	0	1.5148E-05	0	9.08881E-05	0	0.000121184	0	7.40481E-10	1.26309E-08	1.33714E-08	0.0133714
396166.283768177.2	396166.28	3768177	0	0	1.16497E-05	0	2.91243E-06	0	1.74746E-05	0	2.32994E-05	0	1.42368E-10	2.42848E-09	2.57084E-09	0.0025708
396266.283768177.2	396266.28	3768177	0	0	1.35245E-05	0	3.38114E-06	0	2.02868E-05	0	2.70491E-05	0	1.6528E-10	2.8193E-09	2.98458E-09	0.0029846
396366.283768177.2	396366.28	3768177	0	0	1.60168E-05	0	4.00419E-06	0	2.40252E-05	0	3.20335E-05	0	1.95737E-10	3.33883E-09	3.53456E-09	0.0035346
396466.283768177.2	396466.28	3768177	0	0	1.93053E-05	0	4.82632E-06	0	2.89579E-05	0	3.86106E-05	0	2.35925E-10	4.02435E-09	4.26027E-09	0.0042603
397466.283768177.2	397466.28	3768177	0	0	0.001815212	0	0.000453803	0	0.002722818	0	0.003630423	0	2.21833E-08	3.78396E-07	4.00579E-07	0.4005789
397566.283768177.2	397566.28	3768177	0	0	0.000492364	0	0.000123091	0	0.000738547	0	0.000984729	0	6.01706E-09	1.02637E-07	1.08654E-07	0.1086544
397666.283768177.2	397666.28	3768177	0	0	0.000207081	0	5.17704E-05	0	0.000310622	0	0.000414163	0	2.53069E-09	4.31678E-08	4.56985E-08	0.0456985
397766.283768177.2	397766.28	3768177	0	0	0.000113264	0	2.8316E-05	0	0.000169896	0	0.000226528	0	1.38417E-09	2.36108E-08	2.4995E-08	0.024995
397866.283768177.2	397866.28	3768177	0	0	6.82149E-05	0	1.70537E-05	0	0.000102322	0	0.00013643	0	8.33637E-10	1.422E-08	1.50536E-08	0.0150536
396166.283768277.2	396166.28	3768277	0	0	1.0987E-05	0	2.74674E-06	0	1.64804E-05	0	2.19739E-05	0	1.34269E-10	2.29032E-09	2.42459E-09	0.0024246
396266.283768277.2	396266.28	3768277	0	0	1.32121E-05	0	3.30302E-06	0	1.98181E-05	0	2.64241E-05	0	1.61461E-10	2.75416E-09	2.91562E-09	0.0029156
396366.283768277.2	396366.28	3768277	0	0	1.55985E-05	0	3.89961E-06	0	2.33977E-05	0	3.11969E-05	0	1.90625E-10	3.25163E-09	3.44225E-09	0.0034423
396466.283768277.2	396466.28	3768277	0	0	1.87459E-05	0	4.68647E-06	0	2.81188E-05	0	3.74917E-05	0	2.29089E-10	3.90773E-09	4.13682E-09	0.0041368
397366.283768277.2	397366.28	3768277	0	0	0.001211582	0	0.000302895	0	0.001817373	0	0.002423163	0	1.48064E-08	2.52564E-07	2.67371E-07	0.2673705
397466.283768277.2	397466.28	3768277	0	0	0.000921506	0	0.000230376	0	0.001382259	0	0.001843012	0	1.12615E-08	1.92095E-07	2.03357E-07	0.2033569
397566.283768277.2	397566.28	3768277	0	0	0.000452209	0	0.000113052	0	0.000678314	0	0.000904418	0	5.52634E-09	9.42667E-08	9.9793E-08	0.099793
397666.283768277.2	397666.28	3768277	0	0	0.000218439	0	5.46097E-05	0	0.000327658	0	0.000436878	0	2.66949E-09	4.55354E-08	4.82048E-08	0.0482048
397766.283768277.2	397766.28	3768277	0	0	0.000121791	0	3.04479E-05	0	0.000182687	0	0.000243583	0	1.48838E-09	2.53884E-08	2.68768E-08	0.0268768
397866.283768277.2	397866.28	3768277	0	0	7.75412E-05	0	1.93853E-05	0	0.000116312	0	0.000155082	0	9.47612E-10	1.61641E-08	1.71117E-08	0.0171117
396166.283768377.2	396166.28	3768377	0	0	1.02133E-05	0	2.55333E-06	0	1.532E-05	0	2.04267E-05	0	1.24815E-10	2.12905E-09	2.25387E-09	0.0022539
396266.283768377.2	396266.28	3768377	0	0	1.2819E-05	0	3.20474E-06	0	1.92284E-05	0	2.56379E-05	0	1.56657E-10	2.67222E-09	2.82887E-09	0.0028289
396366.283768377.2	396366.28	3768377	0	0	1.50289E-05	0	3.75724E-06	0	2.25434E-05	0	3.00579E-05	0	1.83665E-10	3.13291E-09	3.31657E-09	0.0033166
396466.283768377.2	396466.28	3768377	0	0	1.79445E-05	0	4.48613E-06	0	2.69168E-05	0	3.5889E-05	0	2.19296E-10	3.74068E-09	3.95998E-09	0.00396
397266.283768377.2	397266.28	3768377	0	0	0.000308681	0	7.71701E-05	0	0.000463021	0	0.000617361	0	3.77231E-09	6.4347E-08	6.81193E-08	0.0681193
397366.283768377.2	397366.28	3768377	0	0	0.000460994	0	0.000115248	0	0.00069149	0	0.000921987	0	5.63369E-09	9.60979E-08	1.01732E-07	0.1017316
397466.283768377.2	397466.28	3768377	0	0	0.000455671	0	0.000113918	0	0.000683507	0	0.000911343	0	5.56865E-09	9.49884E-08	1.00557E-07	0.1005571
397566.283768377.2	397566.28	3768377	0	0	0.00032181	0	8.04524E-05	0	0.000482714	0	0.000643619	0	3.93275E-09	6.70838E-08	7.10166E-08	0.0710166
397666.283768377.2	397666.28	3768377	0	0	0.00020086	0	5.02149E-05	0	0.00030129	0	0.000401719	0	2.45466E-09	4.18708E-08	4.43255E-08	0.0443255
397766.283768377.2	397766.28	3768377	0	0	0.000124964	0	3.1241E-05	0	0.000187446	0	0.000249928	0	1.52715E-09	2.60498E-08	2.75769E-08	0.0275769
397866.283768377.2	397866.28	3768377	0	0	8.32539E-05	0	2.08135E-05	0	0.000124881	0	0.000166508	0	1.01743E-09	1.7355E-08	1.83724E-08	0.0183724
396166.283768477.2	396166.28	3768477	0	0	9.82022E-06	0	2.45506E-06	0	1.47303E-05	0	1.96404E-05	0	1.20011E-10	2.04711E-09	2.16712E-09	0.0021671
396266.283768477.2	396266.28	3768477	0	0	1.21991E-05	0	3.04976E-06	0	1.82986E-05	0	2.43981E-05	0	1.49082E-10	2.54299E-09	2.69207E-09	0.0026921
396366.283768477.2	396366.28	3768477	0	0	1.36909E-05	0	3.42271E-06	0	2.05363E-05	0	2.73817E-05	0	1.67313E-10	2.85397E-09	3.02128E-09	0.0030213
396466.283768477.2	396466.28	3768477	0	0	1.69239E-05	0	4.23099E-06	0	2.53859E-05	0	3.38479E-05	0	2.06823E-10	3.52793E-09	3.73476E-09	0.0037348
397166.283768477.2	397166.28	3768477	0	0	0.000118203	0	2.95508E-05	0	0.000177305	0	0.000236406	0	1.44453E-09	2.46404E-08	2.60849E-08	0.0260849
397266.283768477.2	397266.28	3768477	0	0	0.000178563	0	4.46408E-05	0	0.000267845	0	0.000357127	0	2.18218E-09	3.7223E-08	3.94051E-08	0.0394051
397366.283768477.2	397366.28	3768477	0	0	0.000237386	0	5.93466E-05	0	0.000356079	0	0.000474773	0	2.90104E-09	4.94851E-08	5.23862E-08	0.0523862
397466.283768477.2	397466.28	3768477	0	0	0.000246151	0	6.15377E-05	0	0.000369226	0	0.000492301	0	3.00815E-09	5.13121E-08	5.43203E-08	0.0543203
397566.283768477.2	397566.28	3768477	0	0	0.000211076	0	5.27689E-05	0	0.000316613	0	0.000422151	0	2.5795E-09	4.40004E-08	4.65799E-08	0.0465799
397666.283768477.2	397666.28	3768477	0	0	0.000154815	0	3.87038E-05	0	0.000232223	0	0.000309631	0	1.89196E-09	3.22725E-08	3.41645E-08	0.0341645
397766.283768477.2	397766.28	3768477	0	0	0.000111263	0	2.78158E-05	0	0.000166895	0	0.000222526	0	1.35972E-09	2.31937E-08	2.45534E-08	0.0245534
397866.283768477.2	397866.28	3768477	0	0	7.88566E-05	0	1.97142E-05	0	0.000118285	0	0.000157713	0	9.63687E-10	1.64383E-08	1.7402E-08	0.017402
396166.283768577.2	396166.28	3768577	0	0	1.02637E-05	0	2.56593E-06	0	1.53956E-05	0	2.05275E-05	0	1.25431E-10	2.13956E-09	2.26499E-09	0.002265
396266.283768577.2	396266.28	3768577	0	0	1.05762E-05	0	2.64405E-06	0	1.58643E-05	0	2.11524E-05	0	1.29249E-10	2.2047E-09	2.33395E-09	0.0023339
396366.283768577.2	396366.28	3768577	0	0	1.21739E-05	0	3.04346E-06	0	1.82608E-05	0	2.43477E-05	0	1.48774E-10	2.53774E-09	2.68651E-09	0.0026865
396466.283768577.2	396466.28	3768577	0	0	1.57925E-05	0	3.94812E-06	0	2.36887E-05	0	3.1585E-05	0	1.92996E-10	3.29207E-09	3.48507E-09	0.0034851
396566.283768577.2	396566.28	3768577	0	0	1.84737E-05	0	4.61843E-06	0	2.77106E-05	0	3.69474E-05	0	2.25763E-10	3.851E-09	4.07676E-09	0.0040768
396866.283768577.2	396866.28	3768577	0	0	3.55287E-05	0	8.88217E-06	0	5.3293E-05	0	7.10574E-05	0	4.34187E-10	7.40625E-09	7.84043E-09	0.0078404
396966.283768577.2	396966.28	3768577	0	0	4.62687E-05	0	1.15672E-05	0	6.9403E-05	0	9.25374E-05	0	5.65438E-10	9.64509E-09	1.02105E-08	0.0102105
397066.283768577.2	397066.28	3768577	0	0	6.15799E-05	0	1.5395E-05	0	9.23698E-05	0	0.00012316	0	7.52553E-10	1.28368E-08	1.35894E-08	0.0135894
397166.283768577.2	397166.28	3768577	0	0	8.45467E-05	0	2.11367E-05	0	0.00012682	0	0.000169093	0	1.03322E-09	1.76244E-08	1.86577E-08	0.0186577
397266.283768577.2	397266.28	3768577	0	0	0.000114262	0	2.85655E-05	0	0.000171393	0	0.000228524	0	1.39637E-09	2.38188E-08	2.52152E-08	0.0252152
397366.283768577.2	397366.28	3768577	0	0	0.000143433	0	3.58582E-05	0	0.000215149	0	0.000286865	0	1.75286E-09	2.98997E-08	3.16526E-08	0.0316526
397466.283768577.2	397466.28	3768577	0	0	0.000148863	0	3.72158E-05	0	0.000223295	0	0.000297726	0	1.81922E-09	3.10317E-08	3.2851E-08	0.032851
397566.283768577.2	397566.28	3768577	0	0	0.000142636	0	3.56591E-05	0	0.000213955	0	0.000285273	0	1.74312E-09	2.97337E-08	3.14768E-08	0.0314768
397666.283768577.2	397666.28	3768577	0	0	0.000117689	0	2.94222E-05	0	0.000176533	0	0.000235378	0	1.43825E-09	2.45332E-08	2.59715E-08	0.0259715
397766.283768577.2	397766.28	3768577	0	0	9.05794E-05	0	2.26449E-05	0	0.000135869	0	0.000181159	0	1.10695E-09	1.8882E-08	1.9989E-08	0.019989
397866.283768577.2	397866.28	3768577	0	0	6.92758E-05	0	1.73189E-05	0	0.000103914	0	0.000138552	0	8.46602E-10	1.44411E-08	1.52877E-08	0.0152877
396166.283768677.2	396166.28	3768677	0	0	9.76478E-06	0	2.4412E-06	0	1.46472E-05	0	1.95296E-05	0	1.19333E-10	2.03555E-09	2.15488E-09	0.0021549
396266.283768677.2	396266.28	3768677	0	0	1.10752E-05	0	2.76879E-06	0	1.66127E-05	0	2.21503E-05	0	1.35347E-10	2.30871E-09	2.44405E-09	0.0024441
396366.283768677.2	396366.28	3768677	0	0	1.15943E-05	0	2.89857E-06	0	1.73914E-05	0	2.31885E-05	0	1.41691E-10	2.41692E-09	2.55861E-09	0.0025586

Garvey Reservoir Rehab - Mitigated Facility Electrical System			Demolition - 2025	Demolition - 2026	ite Preparation - 202	te Preparation - 202	Grading - 2025	Grading - 2026	nfrastructure - 202	nfrastructure - 202	Paving - 2025	itectural Coating -	Child Risk			
Unique Identifier	X (UTM)	Y (UTM)	1900	1900	2025	1900	2026	1900	2026	1900	2026	1900	3rd Trimester	0<2	Total	per million
396466.283768677.2	396466.28	3768677	0	0	1.46182E-05	0	3.65455E-06	0	2.19273E-05	0	2.92364E-05	0	1.78645E-10	3.04728E-09	3.22593E-09	0.0032259
396566.283768677.2	396566.28	3768677	0	0	1.71079E-05	0	4.27698E-06	0	2.56619E-05	0	3.42158E-05	0	2.09071E-10	3.56628E-09	3.77535E-09	0.0037754
396666.283768677.2	396666.28	3768677	0	0	2.03259E-05	0	5.08147E-06	0	3.04888E-05	0	4.06517E-05	0	2.48397E-10	4.23709E-09	4.48549E-09	0.0044855
396766.283768677.2	396766.28	3768677	0	0	2.45317E-05	0	6.13291E-06	0	3.67975E-05	0	4.90633E-05	0	2.99795E-10	5.11382E-09	5.41362E-09	0.0054136
396866.283768677.2	396866.28	3768677	0	0	3.02469E-05	0	7.56172E-06	0	4.53703E-05	0	6.04938E-05	0	3.6964E-10	6.30521E-09	6.67485E-09	0.0066749
396966.283768677.2	396966.28	3768677	0	0	3.79907E-05	0	9.49767E-06	0	5.6986E-05	0	7.59814E-05	0	4.64275E-10	7.91947E-09	8.38374E-09	0.0083837
397066.283768677.2	397066.28	3768677	0	0	4.85392E-05	0	1.21348E-05	0	7.28088E-05	0	9.70783E-05	0	5.93185E-10	1.01184E-08	1.07116E-08	0.0107116
397166.283768677.2	397166.28	3768677	0	0	6.20814E-05	0	1.55203E-05	0	9.3122E-05	0	0.000124163	0	7.58681E-10	1.29414E-08	1.37E-08	0.0137
397366.283768677.2	397366.28	3768677	0	0	9.57755E-05	0	2.39439E-05	0	0.000143663	0	0.000191551	0	1.17045E-09	1.99652E-08	2.11356E-08	0.0211356
397466.283768677.2	397466.28	3768677	0	0	0.000104061	0	2.60153E-05	0	0.000156092	0	0.000208122	0	1.27171E-09	2.16924E-08	2.29641E-08	0.0229641
397566.283768677.2	397566.28	3768677	0	0	0.000100798	0	2.51994E-05	0	0.000151197	0	0.000201596	0	1.23182E-09	2.10121E-08	2.22439E-08	0.0222439
397666.283768677.2	397666.28	3768677	0	0	8.89994E-05	0	2.22498E-05	0	0.000133499	0	0.000177999	0	1.08764E-09	1.85527E-08	1.96403E-08	0.0196403
397766.283768677.2	397766.28	3768677	0	0	7.34438E-05	0	1.83609E-05	0	0.000110166	0	0.000146888	0	8.97538E-10	1.531E-08	1.62075E-08	0.0162075
397866.283768677.2	397866.28	3768677	0	0	5.93245E-05	0	1.48311E-05	0	8.89868E-05	0	0.000118649	0	7.24991E-10	1.23667E-08	1.30917E-08	0.0130917
396166.283768777.2	396166.28	3768777	0	0	9.29608E-06	0	2.32402E-06	0	1.39441E-05	0	1.85922E-05	0	1.13605E-10	1.93784E-09	2.05145E-09	0.0020514
396266.283768777.2	396266.28	3768777	0	0	1.042E-05	0	2.60499E-06	0	1.563E-05	0	2.08399E-05	0	1.2734E-10	2.17213E-09	2.29947E-09	0.0022995
396366.283768777.2	396366.28	3768777	0	0	1.11508E-05	0	2.78769E-06	0	1.67261E-05	0	2.23015E-05	0	1.36271E-10	2.32447E-09	2.46074E-09	0.0024607
396466.283768777.2	396466.28	3768777	0	0	1.34968E-05	0	3.37421E-06	0	2.02452E-05	0	2.69936E-05	0	1.64941E-10	2.81352E-09	2.97846E-09	0.0029785
396566.283768777.2	396566.28	3768777	0	0	1.5538E-05	0	3.88449E-06	0	2.3307E-05	0	3.1076E-05	0	1.89886E-10	3.23902E-09	3.4289E-09	0.0034289
396666.283768777.2	396666.28	3768777	0	0	1.81612E-05	0	4.54031E-06	0	2.72419E-05	0	3.63225E-05	0	2.21944E-10	3.78586E-09	4.0078E-09	0.0040078
396766.283768777.2	396766.28	3768777	0	0	2.15657E-05	0	5.39142E-06	0	3.23485E-05	0	4.31314E-05	0	2.63549E-10	4.49554E-09	4.75909E-09	0.0047591
396866.283768777.2	396866.28	3768777	0	0	2.59831E-05	0	6.49579E-06	0	3.89747E-05	0	5.19663E-05	0	3.17534E-10	5.4164E-09	5.73393E-09	0.0057339
396966.283768777.2	396966.28	3768777	0	0	3.16253E-05	0	7.90633E-06	0	4.7438E-05	0	6.32506E-05	0	3.86485E-10	6.59255E-09	6.97904E-09	0.006979
397066.283768777.2	397066.28	3768777	0	0	3.88097E-05	0	9.70242E-06	0	5.82145E-05	0	7.76193E-05	0	4.74283E-10	8.09019E-09	8.56447E-09	0.0085645
397166.283768777.2	397166.28	3768777	0	0	4.74279E-05	0	1.1857E-05	0	7.11418E-05	0	9.48557E-05	0	5.79604E-10	9.88673E-09	1.04663E-08	0.0104663
397266.283768777.2	397266.28	3768777	0	0	5.80898E-05	0	1.45224E-05	0	8.71346E-05	0	0.00011618	0	7.09901E-10	1.21093E-08	1.28192E-08	0.0128192
397366.283768777.2	397366.28	3768777	0	0	6.7784E-05	0	1.6946E-05	0	0.000101676	0	0.000135568	0	8.28371E-10	1.41301E-08	1.49585E-08	0.0149585
397466.283768777.2	397466.28	3768777	0	0	7.34488E-05	0	1.83622E-05	0	0.000110173	0	0.000146898	0	8.976E-10	1.5311E-08	1.62086E-08	0.0162086
397566.283768777.2	397566.28	3768777	0	0	7.32371E-05	0	1.83093E-05	0	0.000109856	0	0.000146474	0	8.95013E-10	1.52669E-08	1.61619E-08	0.0161619
397666.283768777.2	397666.28	3768777	0	0	6.76101E-05	0	1.69025E-05	0	0.000101415	0	0.00013522	0	8.26247E-10	1.40939E-08	1.49201E-08	0.0149201
397766.283768777.2	397766.28	3768777	0	0	5.88533E-05	0	1.47133E-05	0	8.828E-05	0	0.000117707	0	7.19232E-10	1.22685E-08	1.29877E-08	0.0129877
397866.283768777.2	397866.28	3768777	0	0	4.98319E-05	0	1.2458E-05	0	7.47479E-05	0	9.96638E-05	0	6.08983E-10	1.03879E-08	1.09968E-08	0.0109968
396166.283768877.2	396166.28	3768877	0	0	8.75933E-06	0	2.18983E-06	0	1.3139E-05	0	1.75187E-05	0	1.07046E-10	1.82595E-09	1.933E-09	0.001933
396266.283768877.2	396266.28	3768877	0	0	9.79502E-06	0	2.44876E-06	0	1.46925E-05	0	1.959E-05	0	1.19703E-10	2.04185E-09	2.16156E-09	0.0021616
396366.283768877.2	396366.28	3768877	0	0	1.09567E-05	0	2.73918E-06	0	1.64351E-05	0	2.19134E-05	0	1.33899E-10	2.28402E-09	2.41792E-09	0.0024179
396466.283768877.2	396466.28	3768877	0	0	1.24611E-05	0	3.11528E-06	0	1.86917E-05	0	2.49223E-05	0	1.52284E-10	2.59762E-09	2.74991E-09	0.0027499
396566.283768877.2	396566.28	3768877	0	0	1.421E-05	0	3.55249E-06	0	2.1315E-05	0	2.84199E-05	0	1.73657E-10	2.96218E-09	3.13584E-09	0.0031358
396666.283768877.2	396666.28	3768877	0	0	1.63318E-05	0	4.08294E-06	0	2.44976E-05	0	3.26635E-05	0	1.99586E-10	3.40449E-09	3.60407E-09	0.0036041
396766.283768877.2	396766.28	3768877	0	0	1.91087E-05	0	4.77718E-06	0	2.86631E-05	0	3.82175E-05	0	2.33523E-10	3.98337E-09	4.2169E-09	0.0042169
396866.283768877.2	396866.28	3768877	0	0	2.2808E-05	0	5.702E-06	0	3.4212E-05	0	4.5616E-05	0	2.78731E-10	4.75452E-09	5.03325E-09	0.0050332
396966.283768877.2	396966.28	3768877	0	0	2.70214E-05	0	6.75534E-06	0	4.0532E-05	0	5.40427E-05	0	3.30221E-10	5.63282E-09	5.96305E-09	0.005963
397066.283768877.2	397066.28	3768877	0	0	3.18269E-05	0	7.95672E-06	0	4.77403E-05	0	6.36538E-05	0	3.88949E-10	6.63458E-09	7.02353E-09	0.0070235
397166.283768877.2	397166.28	3768877	0	0	3.76253E-05	0	9.40632E-06	0	5.64379E-05	0	7.52506E-05	0	4.59809E-10	7.8433E-09	8.30311E-09	0.0083031
397266.283768877.2	397266.28	3768877	0	0	4.43913E-05	0	1.10978E-05	0	6.6587E-05	0	8.87827E-05	0	5.42496E-10	9.25374E-09	9.79623E-09	0.0097962
397366.283768877.2	397366.28	3768877	0	0	5.03309E-05	0	1.25827E-05	0	7.54963E-05	0	0.000100662	0	6.15081E-10	1.04919E-08	1.1107E-08	0.011107
397466.283768877.2	397466.28	3768877	0	0	5.44358E-05	0	1.3609E-05	0	8.16538E-05	0	0.000108872	0	6.65247E-10	1.13476E-08	1.20128E-08	0.0120128
397566.283768877.2	397566.28	3768877	0	0	5.52825E-05	0	1.38206E-05	0	8.29238E-05	0	0.000110565	0	6.75594E-10	1.15241E-08	1.21997E-08	0.0121997
397666.283768877.2	397666.28	3768877	0	0	5.23065E-05	0	1.30766E-05	0	7.84597E-05	0	0.000104613	0	6.39225E-10	1.09037E-08	1.15429E-08	0.0115429
397766.283768877.2	397766.28	3768877	0	0	4.7317E-05	0	1.18292E-05	0	7.09755E-05	0	9.4634E-05	0	5.78249E-10	9.86361E-09	1.04419E-08	0.0104419
397866.283768877.2	397866.28	3768877	0	0	4.17101E-05	0	1.04275E-05	0	6.25652E-05	0	8.34202E-05	0	5.09729E-10	8.69481E-09	9.20454E-09	0.0092045
3964253767739	396425	3767739	0	0	1.69819E-05	0	4.24548E-06	0	2.54729E-05	0	3.39638E-05	0	2.07532E-10	3.54002E-09	3.74755E-09	0.0037475
3964753767739	396475	3767739	0	0	1.85871E-05	0	4.64678E-06	0	2.78807E-05	0	3.71742E-05	0	2.27149E-10	3.87463E-09	4.10178E-09	0.0041018
3965253767739	396525	3767739	0	0	2.0283E-05	0	5.07076E-06	0	3.04245E-05	0	4.05661E-05	0	2.47874E-10	4.22816E-09	4.47604E-09	0.004476
3965753767739	396575	3767739	0	0	2.24275E-05	0	5.60688E-06	0	3.36413E-05	0	4.4855E-05	0	2.74081E-10	4.6752E-09	4.94928E-09	0.0049493
3966253767739	396625	3767739	0	0	2.43956E-05	0	6.0989E-06	0	3.65934E-05	0	4.87912E-05	0	2.98132E-10	5.08546E-09	5.38359E-09	0.0053836
3966753767739	396675	3767739	0	0	2.7165E-05	0	6.79125E-06	0	4.07475E-05	0	5.433E-05	0	3.31977E-10	5.66277E-09	5.99474E-09	0.0059947
3967253767739	396725	3767739	0	0	3.11037E-05	0	7.77592E-06	0	4.66555E-05	0	6.22073E-05	0	3.8011E-10	6.48381E-09	6.86392E-09	0.0068639
3967753767739	396775	3767739	0	0	3.48357E-05	0	8.70893E-06	0	5.22536E-05	0	6.96714E-05	0	4.25719E-10	7.26179E-09	7.68751E-09	0.0076875
3968253767739	396825	3767739	0	0	4.00192E-05	0	1.00048E-05	0	6.00289E-05	0	8.00385E-05	0	4.89065E-10	8.34234E-09	8.8314E-09	0.0088314
3968753767739	396875	3767739	0	0	4.60293E-05	0	1.15073E-05	0	6.9044E-05	0	9.20586E-05	0	5.62513E-10	9.59518E-09	1.01577E-08	0.0101577
3969253767739	396925	3767739	0	0	5.25484E-05	0	1.31371E-05	0	7.88226E-05	0	0.000105097	0	6.42181E-10	1.09541E-08	1.15963E-08	0.0115963
3969753767739	396975	3767739	0	0	5.98134E-05	0	1.49534E-05	0	8.97201E-05	0	0.000119627	0	7.30965E-10	1.24686E-08	1.31996E-08	0.0131996
3970253767739	397025	3767739	0	0	6.75698E-05	0	1.68924E-05	0	0.000101355	0	0.00013514	0	8.25754E-10	1.40855E-08	1.49112E-08	0.0149112
3970753767739	397075	3767739	0	0	7.52985E-05	0	1.88246E-05	0	0.000112948	0	0.000150597	0	9.20204E-10	1.56966E-08	1.66168E-08	0.0166168
3971253767739	397125	3767739	0	0	8.26668E-05	0	2.06667E-05	0	0.000124	0	0.000165334	0	1.01025E-09	1.72326E-08	1.82428E-08	0.0182428
3971753767739	397175	3767739	0	0	8.94983E-05	0	2.23746E-05	0	0.000134248	0	0.000178997	0	1.09374E-09	1.86567E-08	1.97504E-08	0.0197504
3972253767739	397225	3767739	0	0	9.48028E-05	0	2.37007E-05	0	0.000142204	0	0.000189606	0	1.15856E-09	1.97624E-08	2.0921E-08	0.020921
3972753767739	397275	3767739	0	0	9.85449E-05	0	2.46362E-05	0	0.000147817	0	0.00019709	0	1.20429E-09	2.05425E-08	2.17468E-08	0.0217468
3973253767739	397325	3767739	0	0	9.85878E-05	0	2.46469E-05	0	0.000147882	0	0.000197176	0	1.20482E-09	2.05514E-08	2.17562E-08	0.0217562

Garvey Reservoir Rehab - Mitigated Facility Electrical System			Demolition - 2025	Demolition - 2026	ite Preparation - 202	te Preparation - 202	Grading - 2025	Grading - 2026	nfrastructure - 202	nfrastructure - 202	Paving - 2025	itectural Coating -	Child Risk			
Unique Identifier	X (UTM)	Y (UTM)	1900	1900	2025	1900	2026	1900	2026	1900	2026	1900	3rd Trimester	0<2	Total	per million
3973753767739	397375	3767739	0	0	9.59973E-05	0	2.39993E-05	0	0.000143996	0	0.000191995	0	1.17316E-09	2.00114E-08	2.11846E-08	0.0211846
3974253767739	397425	3767739	0	0	9.18646E-05	0	2.29661E-05	0	0.000137797	0	0.000183729	0	1.12265E-09	1.91499E-08	2.02726E-08	0.0202726
3974753767739	397475	3767739	0	0	8.62829E-05	0	2.15707E-05	0	0.000129424	0	0.000172566	0	1.05444E-09	1.79864E-08	1.90408E-08	0.0190408
3975253767739	397525	3767739	0	0	7.91338E-05	0	1.97835E-05	0	0.000118701	0	0.000158268	0	9.67075E-10	1.64961E-08	1.74632E-08	0.0174632
3964253767789	396425	3767789	0	0	1.73221E-05	0	4.33052E-06	0	2.59831E-05	0	3.46442E-05	0	2.11689E-10	3.61093E-09	3.82262E-09	0.0038226
3964753767789	396475	3767789	0	0	1.89298E-05	0	4.73246E-06	0	2.83947E-05	0	3.78596E-05	0	2.31337E-10	3.94608E-09	4.17741E-09	0.0041774
3965253767789	396525	3767789	0	0	2.07064E-05	0	5.1766E-06	0	3.10596E-05	0	4.14128E-05	0	2.53048E-10	4.31641E-09	4.56946E-09	0.0045695
3965753767789	396575	3767789	0	0	2.2745E-05	0	5.68625E-06	0	3.41175E-05	0	4.549E-05	0	2.77961E-10	4.74138E-09	5.01935E-09	0.0050193
3966253767789	396625	3767789	0	0	2.53078E-05	0	6.32695E-06	0	3.79617E-05	0	5.06156E-05	0	3.0928E-10	5.27562E-09	5.5849E-09	0.0055849
3966753767789	396675	3767789	0	0	2.85384E-05	0	7.13459E-06	0	4.28076E-05	0	5.70767E-05	0	3.4876E-10	5.94906E-09	6.29782E-09	0.0062978
3967253767789	396725	3767789	0	0	3.28198E-05	0	8.20494E-06	0	4.92296E-05	0	6.56395E-05	0	4.01082E-10	6.84155E-09	7.24263E-09	0.0072426
3967753767789	396775	3767789	0	0	3.74287E-05	0	9.35718E-06	0	5.61431E-05	0	7.48575E-05	0	4.57407E-10	7.80232E-09	8.25973E-09	0.0082597
3968253767789	396825	3767789	0	0	4.33229E-05	0	1.08307E-05	0	6.49843E-05	0	8.66458E-05	0	5.29438E-10	9.03101E-09	9.56045E-09	0.0095604
3968753767789	396875	3767789	0	0	5.02729E-05	0	1.25682E-05	0	7.54093E-05	0	0.000100546	0	6.14373E-10	1.04798E-08	1.10942E-08	0.0110942
3969253767789	396925	3767789	0	0	5.84526E-05	0	1.46132E-05	0	8.76789E-05	0	0.000116905	0	7.14335E-10	1.21849E-08	1.28993E-08	0.0128993
3969753767789	396975	3767789	0	0	6.81494E-05	0	1.70373E-05	0	0.000102224	0	0.000136299	0	8.32837E-10	1.42063E-08	1.50391E-08	0.0150391
3970253767789	397025	3767789	0	0	7.91641E-05	0	1.9791E-05	0	0.000118746	0	0.000158328	0	9.67444E-10	1.65024E-08	1.74698E-08	0.0174698
3970753767789	397075	3767789	0	0	9.1101E-05	0	2.27753E-05	0	0.000136652	0	0.000182202	0	1.11332E-09	1.89908E-08	2.01041E-08	0.0201041
3971253767789	397125	3767789	0	0	0.000103224	0	2.58061E-05	0	0.000154837	0	0.000206449	0	1.26148E-09	2.1518E-08	2.27795E-08	0.0227795
3971753767789	397175	3767789	0	0	0.000114874	0	2.87185E-05	0	0.000172311	0	0.000229748	0	1.40385E-09	2.39465E-08	2.53503E-08	0.0253503
3972253767789	397225	3767789	0	0	0.000124604	0	3.11509E-05	0	0.000186906	0	0.000249207	0	1.52275E-09	2.59747E-08	2.74974E-08	0.0274974
3972753767789	397275	3767789	0	0	0.000132161	0	3.30403E-05	0	0.000198242	0	0.000264322	0	1.61511E-09	2.755E-08	2.91651E-08	0.0291651
3973253767789	397325	3767789	0	0	0.00013395	0	3.34875E-05	0	0.000200925	0	0.0002679	0	1.63697E-09	2.7923E-08	2.956E-08	0.02956
3973753767789	397375	3767789	0	0	0.000130266	0	3.25665E-05	0	0.000195399	0	0.000260532	0	1.59195E-09	2.7155E-08	2.8747E-08	0.028747
3974253767789	397425	3767789	0	0	0.000122794	0	3.06986E-05	0	0.000184192	0	0.000245589	0	1.50064E-09	2.55975E-08	2.70981E-08	0.0270981
3974753767789	397475	3767789	0	0	0.000110177	0	2.75443E-05	0	0.000165266	0	0.000220354	0	1.34645E-09	2.29673E-08	2.43137E-08	0.0243137
3975253767789	397525	3767789	0	0	9.97344E-05	0	2.49336E-05	0	0.000149602	0	0.000199469	0	1.21883E-09	2.07904E-08	2.20093E-08	0.0220093
3964253767839	396425	3767839	0	0	1.76094E-05	0	4.40234E-06	0	2.64141E-05	0	3.52187E-05	0	2.152E-10	3.67082E-09	3.88602E-09	0.003886
3964753767839	396475	3767839	0	0	1.9333E-05	0	4.83325E-06	0	2.89995E-05	0	3.8666E-05	0	2.36264E-10	4.03012E-09	4.26639E-09	0.0042664
3965253767839	396525	3767839	0	0	2.10491E-05	0	5.26227E-06	0	3.15736E-05	0	4.20982E-05	0	2.57236E-10	4.38786E-09	4.64509E-09	0.0046451
3965753767839	396575	3767839	0	0	2.33574E-05	0	5.83934E-06	0	3.5036E-05	0	4.67147E-05	0	2.85445E-10	4.86903E-09	5.15448E-09	0.0051545
3966253767839	396625	3767839	0	0	2.61495E-05	0	6.53737E-06	0	3.92242E-05	0	5.22989E-05	0	3.19566E-10	5.45107E-09	5.77064E-09	0.0057706
3966753767839	396675	3767839	0	0	3.01385E-05	0	7.53463E-06	0	4.52078E-05	0	6.02771E-05	0	3.68316E-10	6.28262E-09	6.65094E-09	0.0066509
3967253767839	396725	3767839	0	0	3.4498E-05	0	8.62451E-06	0	5.17471E-05	0	6.89961E-05	0	4.21592E-10	7.1914E-09	7.61299E-09	0.007613
3967753767839	396775	3767839	0	0	3.97597E-05	0	9.93992E-06	0	5.96395E-05	0	7.95194E-05	0	4.85893E-10	8.28823E-09	8.77412E-09	0.0087741
3968253767839	396825	3767839	0	0	4.63065E-05	0	1.15766E-05	0	6.94597E-05	0	9.2613E-05	0	5.659E-10	9.65297E-09	1.02189E-08	0.0102189
3968753767839	396875	3767839	0	0	5.44283E-05	0	1.36071E-05	0	8.16424E-05	0	0.000108857	0	6.65155E-10	1.1346E-08	1.20112E-08	0.0120112
3969253767839	396925	3767839	0	0	6.44577E-05	0	1.61144E-05	0	9.66865E-05	0	0.000128915	0	7.87721E-10	1.34367E-08	1.42244E-08	0.0142244
3969753767839	396975	3767839	0	0	7.68533E-05	0	1.92133E-05	0	0.00011528	0	0.000153707	0	9.39205E-10	1.60207E-08	1.69599E-08	0.0169599
3970253767839	397025	3767839	0	0	9.17789E-05	0	2.29447E-05	0	0.000137668	0	0.000183558	0	1.12161E-09	1.91321E-08	2.02537E-08	0.0202537
3970753767839	397075	3767839	0	0	0.000109807	0	2.74516E-05	0	0.00016471	0	0.000219613	0	1.34192E-09	2.28901E-08	2.4232E-08	0.024232
3971253767839	397125	3767839	0	0	0.000129235	0	3.23088E-05	0	0.000193853	0	0.000258471	0	1.57935E-09	2.69402E-08	2.85195E-08	0.0285195
3971753767839	397175	3767839	0	0	0.000150909	0	3.77273E-05	0	0.000226364	0	0.000301819	0	1.84423E-09	3.14583E-08	3.33025E-08	0.0333025
3972253767839	397225	3767839	0	0	0.000171243	0	4.28107E-05	0	0.000256864	0	0.000342486	0	2.09272E-09	3.5697E-08	3.77897E-08	0.0377897
3972753767839	397275	3767839	0	0	0.000183286	0	4.58214E-05	0	0.000274928	0	0.000366571	0	2.23989E-09	3.82074E-08	4.04473E-08	0.0404473
3973253767839	397325	3767839	0	0	0.000183477	0	4.58693E-05	0	0.000275216	0	0.000366954	0	2.24223E-09	3.82473E-08	4.04895E-08	0.0404895
3973753767839	397375	3767839	0	0	0.000186733	0	4.66832E-05	0	0.000280099	0	0.000373466	0	2.28202E-09	3.8926E-08	4.1208E-08	0.041208
3974753767839	397475	3767839	0	0	0.000154112	0	3.85281E-05	0	0.000231168	0	0.000308224	0	1.88337E-09	3.2126E-08	3.40093E-08	0.0340093
3975253767839	397525	3767839	0	0	0.000127635	0	3.19088E-05	0	0.000191453	0	0.00025527	0	1.5598E-09	2.66066E-08	2.81664E-08	0.0281664
3964253767889	396425	3767889	0	0	1.78261E-05	0	4.45652E-06	0	2.67391E-05	0	3.56522E-05	0	2.17848E-10	3.71599E-09	3.93384E-09	0.0039338
3964753767889	396475	3767889	0	0	1.93784E-05	0	4.84459E-06	0	2.90676E-05	0	3.87567E-05	0	2.36818E-10	4.03958E-09	4.2764E-09	0.0042764
3965253767889	396525	3767889	0	0	2.14246E-05	0	5.35614E-06	0	3.21369E-05	0	4.28491E-05	0	2.61824E-10	4.46613E-09	4.72795E-09	0.004728
3965753767889	396575	3767889	0	0	2.40201E-05	0	6.00503E-06	0	3.60302E-05	0	4.80402E-05	0	2.93544E-10	5.00719E-09	5.30073E-09	0.0053007
3974753767889	397475	3767889	0	0	0.000215163	0	5.37907E-05	0	0.000322744	0	0.000430326	0	2.62945E-09	4.48525E-08	4.74819E-08	0.0474819
3975253767889	397525	3767889	0	0	0.000160077	0	4.00192E-05	0	0.000240115	0	0.000320154	0	1.95626E-09	3.33693E-08	3.53256E-08	0.0353256
3964253767939	396425	3767939	0	0	1.79773E-05	0	4.49432E-06	0	2.69659E-05	0	3.59546E-05	0	2.19696E-10	3.74751E-09	3.96721E-09	0.0039672
3964753767939	396475	3767939	0	0	1.95875E-05	0	4.89688E-06	0	2.93813E-05	0	3.91751E-05	0	2.39374E-10	4.08318E-09	4.32255E-09	0.0043226
3965253767939	396525	3767939	0	0	2.17622E-05	0	5.44056E-06	0	3.26434E-05	0	4.35245E-05	0	2.65951E-10	4.53652E-09	4.80247E-09	0.0048025
3974753767939	397475	3767939	0	0	0.000280225	0	7.00563E-05	0	0.000420338	0	0.000560451	0	3.42457E-09	5.84153E-08	6.18398E-08	0.0618398
3975253767939	397525	3767939	0	0	0.000210529	0	5.26322E-05	0	0.000315793	0	0.000421058	0	2.57282E-09	4.38864E-08	4.64593E-08	0.0464593
3964253767989	396425	3767989	0	0	1.79395E-05	0	4.48487E-06	0	2.69092E-05	0	3.5879E-05	0	2.19234E-10	3.73963E-09	3.95887E-09	0.0039589
3964753767989	396475	3767989	0	0	1.97488E-05	0	4.9372E-06	0	2.96232E-05	0	3.94976E-05	0	2.41345E-10	4.1168E-09	4.35814E-09	0.0043581
3974753767989	397475	3767989	0	0	0.000405462	0	0.000101365	0	0.000608192	0	0.000810923	0	4.95505E-09	8.45218E-08	8.94768E-08	0.0894768
3975253767989	397525	3767989	0	0	0.000276163	0	6.90408E-05	0	0.000414245	0	0.000552326	0	3.37492E-09	5.75685E-08	6.09434E-08	0.0609434
3964253768039	396425	3768039	0	0	1.79697E-05	0	4.49243E-06	0	2.69546E-05	0	3.59394E-05	0	2.19604E-10	3.74594E-09	3.96554E-09	0.0039655
3964753768039	396475	3768039	0	0	1.98597E-05	0	4.96492E-06	0	2.97895E-05	0	3.97194E-05	0	2.427E-10	4.13991E-09	4.38261E-09	0.0043826
3974753768039	397475	3768039	0	0	0.000702399	0	0.0001756	0	0.001053599	0	0.001404798	0	8.58385E-09	1.46421E-07	1.55005E-07	0.1550047
3975253768039	397525	3768039	0	0	0.000448086	0	0.000112022	0	0.00067213	0	0.000896173	0	5.47595E-09	9.34073E-08	9.88832E-08	0.0988832
3964253768089	396425	3768089	0	0	1.79722E-05	0	4.49306E-06	0	2.69584E-05	0	3.59445E-05	0	2.19634E-10	3.74646E-09	3.9661E-09	0.0039661

Garvey Reservoir Rehab - Mitigated Facility Electrical System			Demolition - 2025	Demolition - 2026	ite Preparation - 202	te Preparation - 202	Grading - 2025	Grading - 2026	nfrastructure - 202	nfrastructure - 202	Paving - 2025	itectural Coating -	Child Risk			
Unique Identifier	X (UTM)	Y (UTM)	1900	1900	2025	1900	2026	1900	2026	1900	2026	1900	3rd Trimester	0<2	Total	per million
3964753768089	396475	3768089	0	0	1.9895E-05	0	4.97374E-06	0	2.98424E-05	0	3.97899E-05	0	2.43131E-10	4.14727E-09	4.3904E-09	0.0043904
3974753768089	397475	3768089	0	0	0.001141673	0	0.000285418	0	0.00171251	0	0.002283347	0	1.39521E-08	2.37991E-07	2.51943E-07	0.2519432
3975253768089	397525	3768089	0	0	0.000625697	0	0.000156424	0	0.000938546	0	0.001251394	0	7.64649E-09	1.30432E-07	1.38078E-07	0.1380782
3964253768139	396425	3768139	0	0	1.80151E-05	0	4.50377E-06	0	2.70226E-05	0	3.60302E-05	0	2.20158E-10	3.75539E-09	3.97555E-09	0.0039755
3964753768139	396475	3768139	0	0	1.97841E-05	0	4.94602E-06	0	2.96761E-05	0	3.95682E-05	0	2.41776E-10	4.12415E-09	4.36593E-09	0.0043659
3974253768139	397425	3768139	0	0	0.005002873	0	0.001250718	0	0.00750431	0	0.010005747	0	6.11389E-08	1.04289E-06	1.10403E-06	1.1040286
3974753768139	397475	3768139	0	0	0.001631387	0	0.000407847	0	0.00244708	0	0.003262774	0	1.99368E-08	3.40076E-07	3.60013E-07	0.3600127
3975253768139	397525	3768139	0	0	0.000755111	0	0.000188778	0	0.001132667	0	0.001510223	0	9.22803E-09	1.57409E-07	1.66637E-07	0.1666372
3964253768189	396425	3768189	0	0	1.78362E-05	0	4.45904E-06	0	2.67543E-05	0	3.56723E-05	0	2.17971E-10	3.71809E-09	3.93607E-09	0.0039361
3964753768189	396475	3768189	0	0	1.95926E-05	0	4.89814E-06	0	2.93889E-05	0	3.91851E-05	0	2.39436E-10	4.08423E-09	4.32367E-09	0.0043237
3973753768189	397375	3768189	0	0	0.00550505	0	0.001376263	0	0.008257576	0	0.011010101	0	6.72759E-08	1.14757E-06	1.21485E-06	1.2148485
3974253768189	397425	3768189	0	0	0.002978809	0	0.000744702	0	0.004468213	0	0.005957617	0	3.64033E-08	6.20957E-07	6.5736E-07	0.6573602
3974753768189	397475	3768189	0	0	0.001521628	0	0.000380407	0	0.002282442	0	0.003043256	0	1.85954E-08	3.17196E-07	3.35791E-07	0.3357912
3975253768189	397525	3768189	0	0	0.000793019	0	0.000198255	0	0.001189528	0	0.001586038	0	9.69129E-09	1.65311E-07	1.75003E-07	0.1750026
3964253768239	396425	3768239	0	0	1.75917E-05	0	4.39793E-06	0	2.63876E-05	0	3.51835E-05	0	2.14984E-10	3.66714E-09	3.88212E-09	0.0038821
3964753768239	396475	3768239	0	0	1.93229E-05	0	4.83073E-06	0	2.89844E-05	0	3.86459E-05	0	2.36141E-10	4.02802E-09	4.26416E-09	0.0042642
3973753768239	397375	3768239	0	0	0.002090677	0	0.000522669	0	0.003136015	0	0.004181354	0	2.55496E-08	4.35819E-07	4.61368E-07	0.4613683
3974253768239	397425	3768239	0	0	0.001537693	0	0.000384423	0	0.002306539	0	0.003075386	0	1.87918E-08	3.20545E-07	3.39336E-07	0.3393364
3974753768239	397475	3768239	0	0	0.001019295	0	0.000254824	0	0.001528942	0	0.00203859	0	1.24566E-08	2.1248E-07	2.24937E-07	0.2249369
3975253768239	397525	3768239	0	0	0.000657106	0	0.000164276	0	0.000985659	0	0.001314212	0	8.03033E-09	1.36979E-07	1.45009E-07	0.1450094
3964253768289	396425	3768289	0	0	1.72742E-05	0	4.31855E-06	0	2.59113E-05	0	3.45484E-05	0	2.11104E-10	3.60095E-09	3.81206E-09	0.0038121
3964753768289	396475	3768289	0	0	1.89827E-05	0	4.74569E-06	0	2.84741E-05	0	3.79655E-05	0	2.31983E-10	3.95711E-09	4.18909E-09	0.0041891
3973253768289	397325	3768289	0	0	0.00088218	0	0.000220545	0	0.001323269	0	0.001764359	0	1.07809E-08	1.83898E-07	1.94678E-07	0.1946784
3973753768289	397375	3768289	0	0	0.00107305	0	0.000268263	0	0.001609575	0	0.002146101	0	1.31135E-08	2.23686E-07	2.368E-07	0.2367996
3974253768289	397425	3768289	0	0	0.0010351	0	0.000258775	0	0.00155265	0	0.0020702	0	1.26497E-08	2.15775E-07	2.28425E-07	0.2284247
3974753768289	397475	3768289	0	0	0.000822689	0	0.000205672	0	0.001234033	0	0.001645378	0	1.00539E-08	1.71496E-07	1.8155E-07	0.1815501
3975253768289	397525	3768289	0	0	0.000586943	0	0.000146736	0	0.000880414	0	0.001173886	0	7.17289E-09	1.22353E-07	1.29526E-07	0.1295259
3964253768339	396425	3768339	0	0	1.69491E-05	0	4.23729E-06	0	2.54237E-05	0	3.38983E-05	0	2.07131E-10	3.53319E-09	3.74032E-09	0.0037403
3964753768339	396475	3768339	0	0	1.85821E-05	0	4.64552E-06	0	2.78731E-05	0	3.71641E-05	0	2.27087E-10	3.87358E-09	4.10067E-09	0.0041007
3965253768339	396525	3768339	0	0	2.05703E-05	0	5.14258E-06	0	3.08555E-05	0	4.11406E-05	0	2.51385E-10	4.28805E-09	4.53943E-09	0.0045394
3972753768339	397275	3768339	0	0	0.000418341	0	0.000104585	0	0.000627512	0	0.000836682	0	5.11244E-09	8.72066E-08	9.2319E-08	0.092319
3973253768339	397325	3768339	0	0	0.000549529	0	0.000137382	0	0.000824294	0	0.001099059	0	6.71566E-09	1.14554E-07	1.2127E-07	0.1212695
3973753768339	397375	3768339	0	0	0.000646068	0	0.000161517	0	0.000969103	0	0.001292137	0	7.89544E-09	1.34678E-07	1.42574E-07	0.1425737
3974253768339	397425	3768339	0	0	0.000654445	0	0.000163611	0	0.000981667	0	0.001308889	0	7.99781E-09	1.36424E-07	1.44422E-07	0.1444221
3974753768339	397475	3768339	0	0	0.000578133	0	0.000144533	0	0.0008672	0	0.001156266	0	7.06522E-09	1.20517E-07	1.27582E-07	0.1275818
3975253768339	397525	3768339	0	0	0.00046558	0	0.000116395	0	0.00069837	0	0.00093116	0	5.68974E-09	9.70539E-08	1.02744E-07	0.1027437
3964253768389	396425	3768389	0	0	1.65485E-05	0	4.13712E-06	0	2.48227E-05	0	3.3097E-05	0	2.02235E-10	3.44966E-09	3.6519E-09	0.0036519
3964753768389	396475	3768389	0	0	1.81159E-05	0	4.52897E-06	0	2.71738E-05	0	3.62318E-05	0	2.2139E-10	3.7764E-09	3.99779E-09	0.0039978
3965253768389	396525	3768389	0	0	1.99882E-05	0	4.99705E-06	0	2.99823E-05	0	3.99764E-05	0	2.44271E-10	4.1667E-09	4.41097E-09	0.004411
3972253768389	397225	3768389	0	0	0.000232238	0	5.80595E-05	0	0.000348357	0	0.000464476	0	2.83812E-09	4.84119E-08	5.125E-08	0.05125
3972753768389	397275	3768389	0	0	0.000300088	0	7.50219E-05	0	0.000450131	0	0.000600175	0	3.6673E-09	6.25557E-08	6.6223E-08	0.066223
3973253768389	397325	3768389	0	0	0.000373121	0	9.32802E-05	0	0.000559681	0	0.000746241	0	4.55982E-09	7.778E-08	8.23398E-08	0.0823398
3973753768389	397375	3768389	0	0	0.000428897	0	0.000107224	0	0.000643346	0	0.000857794	0	5.24145E-09	8.94071E-08	9.46485E-08	0.0946485
3974253768389	397425	3768389	0	0	0.000443339	0	0.000110835	0	0.000665008	0	0.000886678	0	5.41794E-09	9.24176E-08	9.78355E-08	0.0978355
3974753768389	397475	3768389	0	0	0.000414314	0	0.000103579	0	0.000621471	0	0.000828628	0	5.06323E-09	8.63672E-08	9.14304E-08	0.0914304
3975253768389	397525	3768389	0	0	0.00035755	0	8.93875E-05	0	0.000536325	0	0.0007151	0	4.36953E-09	7.45342E-08	7.89037E-08	0.0789037
3964253768439	396425	3768439	0	0	1.61402E-05	0	4.03506E-06	0	2.42104E-05	0	3.22805E-05	0	1.97246E-10	3.36457E-09	3.56181E-09	0.0035618
3964753768439	396475	3768439	0	0	1.76069E-05	0	4.40171E-06	0	2.64103E-05	0	3.52137E-05	0	2.15169E-10	3.67029E-09	3.88546E-09	0.0038855
3965253768439	396525	3768439	0	0	1.93507E-05	0	4.83766E-06	0	2.9026E-05	0	3.87013E-05	0	2.3648E-10	4.0338E-09	4.27028E-09	0.0042703
3971753768439	397175	3768439	0	0	0.000143188	0	3.57971E-05	0	0.000214782	0	0.000286377	0	1.74987E-09	2.98488E-08	3.15986E-08	0.0315986
3972253768439	397225	3768439	0	0	0.00018163	0	4.54075E-05	0	0.000272445	0	0.00036326	0	2.21966E-09	3.78623E-08	4.00819E-08	0.0400819
3972753768439	397275	3768439	0	0	0.000224729	0	5.61822E-05	0	0.000337093	0	0.000449457	0	2.74635E-09	4.68465E-08	4.95929E-08	0.0495929
3973253768439	397325	3768439	0	0	0.000268916	0	6.7229E-05	0	0.000403374	0	0.000537832	0	3.28635E-09	5.60577E-08	5.93441E-08	0.0593441
3973753768439	397375	3768439	0	0	0.000304737	0	7.61842E-05	0	0.000457105	0	0.000609474	0	3.72411E-09	6.35249E-08	6.7249E-08	0.067249
3974253768439	397425	3768439	0	0	0.000319726	0	7.99314E-05	0	0.000479588	0	0.000639451	0	3.90729E-09	6.66494E-08	7.05567E-08	0.0705567
3974753768439	397475	3768439	0	0	0.000307741	0	7.69352E-05	0	0.000461611	0	0.000615481	0	3.76082E-09	6.4151E-08	6.79119E-08	0.0679119
3975253768439	397525	3768439	0	0	0.000278174	0	6.95435E-05	0	0.000417261	0	0.000556348	0	3.3995E-09	5.79877E-08	6.13872E-08	0.0613872
3964253768489	396425	3768489	0	0	1.5669E-05	0	3.91725E-06	0	2.35035E-05	0	3.1338E-05	0	1.91487E-10	3.26633E-09	3.45782E-09	0.0034578
3964753768489	396475	3768489	0	0	1.70499E-05	0	4.26249E-06	0	2.55749E-05	0	3.40999E-05	0	2.08363E-10	3.5542E-09	3.76256E-09	0.0037626
3965253768489	396525	3768489	0	0	1.86803E-05	0	4.67009E-06	0	2.80205E-05	0	3.73607E-05	0	2.28288E-10	3.89407E-09	4.12236E-09	0.0041224
3970753768489	397075	3768489	0	0	7.95042E-05	0	1.98761E-05	0	0.000119256	0	0.000159008	0	9.71602E-10	1.65733E-08	1.75449E-08	0.0175449
3971253768489	397125	3768489	0	0	9.59116E-05	0	2.39779E-05	0	0.000143867	0	0.000191823	0	1.17211E-09	1.99936E-08	2.11657E-08	0.0211657
3971753768489	397175	3768489	0	0	0.000117477	0	2.93693E-05	0	0.000176216	0	0.000234955	0	1.43566E-09	2.44891E-08	2.59248E-08	0.0259248
3972253768489	397225	3768489	0	0	0.000144516	0	3.61291E-05	0	0.000216774	0	0.000289033	0	1.7661E-09	3.01256E-08	3.18917E-08	0.0318917
3972753768489	397275	3768489	0	0	0.000173934	0	4.34835E-05	0	0.000260901	0	0.000347868	0	2.12561E-09	3.6258E-08	3.83836E-08	0.0383836
3973253768489	397325	3768489	0	0	0.000201306	0	5.03264E-05	0	0.000301959	0	0.000402612	0	2.46011E-09	4.19638E-08	4.44239E-08	0.0444239
3973753768489	397375	3768489	0	0	0.00022554	0	5.6385E-05	0	0.00033831	0	0.00045108	0	2.75627E-09	4.70157E-08	4.97719E-08	0.0497719
3974253768489	397425	3768489	0	0	0.000234229	0	5.85572E-05	0	0.000351343	0	0.000468458	0	2.86245E-09	4.88269E-08	5.16894E-08	0.0516894
3974753768489	397475	3768489	0	0	0.000227884	0	5.69709E-05	0	0.000341825	0	0.000455767	0	2.78491E-09	4.75042E-08	5.02891E-08	0.0502891

Garvey Reservoir Rehab - Mitigated Facility Electrical System			Demolition - 2025	Demolition - 2026	ite Preparation - 202	te Preparation - 202	Grading - 2025	Grading - 2026	nfrastructure - 202	nfrastructure - 202	Paving - 2025	itectural Coating -	Child Risk			
Unique Identifier	X (UTM)	Y (UTM)	1900	1900	2025	1900	2026	1900	2026	1900	2026	1900	3rd Trimester	0<2	Total	per million
3975253768489	397525	3768489	0	0	0.000215528	0	5.38821E-05	0	0.000323292	0	0.000431057	0	2.63392E-09	4.49286E-08	4.75626E-08	0.0475626
3964253768539	396425	3768539	0	0	1.51751E-05	0	3.79378E-06	0	2.27627E-05	0	3.03502E-05	0	1.85451E-10	3.16337E-09	3.34883E-09	0.0033488
3964753768539	396475	3768539	0	0	1.64754E-05	0	4.11885E-06	0	2.47131E-05	0	3.29508E-05	0	2.01342E-10	3.43443E-09	3.63577E-09	0.0036358
3965253768539	396525	3768539	0	0	1.79748E-05	0	4.49369E-06	0	2.69621E-05	0	3.59495E-05	0	2.19665E-10	3.74699E-09	3.96665E-09	0.0039667
3965753768539	396575	3768539	0	0	1.94918E-05	0	4.87294E-06	0	2.92377E-05	0	3.89835E-05	0	2.38204E-10	4.06322E-09	4.30142E-09	0.0043014
3970253768539	397025	3768539	0	0	5.92212E-05	0	1.48053E-05	0	8.88318E-05	0	0.000118442	0	7.23728E-10	1.23451E-08	1.30689E-08	0.0130689
3970753768539	397075	3768539	0	0	6.96714E-05	0	1.74179E-05	0	0.000104507	0	0.000139343	0	8.51437E-10	1.45236E-08	1.5375E-08	0.015375
3971253768539	397125	3768539	0	0	8.23694E-05	0	2.05924E-05	0	0.000123554	0	0.000164739	0	1.00662E-09	1.71706E-08	1.81772E-08	0.0181772
3971753768539	397175	3768539	0	0	9.8419E-05	0	2.46047E-05	0	0.000147628	0	0.000196838	0	1.20275E-09	2.05162E-08	2.1719E-08	0.021719
3972253768539	397225	3768539	0	0	0.000117147	0	2.92868E-05	0	0.000175721	0	0.000234294	0	1.43163E-09	2.44203E-08	2.58519E-08	0.0258519
3972753768539	397275	3768539	0	0	0.000138297	0	3.45743E-05	0	0.000207446	0	0.000276594	0	1.69009E-09	2.88292E-08	3.05192E-08	0.0305192
3973253768539	397325	3768539	0	0	0.000157267	0	3.93168E-05	0	0.000235901	0	0.000314534	0	1.92192E-09	3.27836E-08	3.47056E-08	0.0347056
3973753768539	397375	3768539	0	0	0.000173939	0	4.34848E-05	0	0.000260909	0	0.000347878	0	2.12567E-09	3.6259E-08	3.83847E-08	0.0383847
3974253768539	397425	3768539	0	0	0.000178914	0	4.47284E-05	0	0.00026837	0	0.000357827	0	2.18646E-09	3.7296E-08	3.94824E-08	0.0394824
3974753768539	397475	3768539	0	0	0.000177651	0	4.44128E-05	0	0.000266477	0	0.000355302	0	2.17103E-09	3.70328E-08	3.92038E-08	0.0392038
3975253768539	397525	3768539	0	0	0.000169723	0	4.24308E-05	0	0.000254585	0	0.000339447	0	2.07415E-09	3.53802E-08	3.74544E-08	0.0374544
3964253768589	396425	3768589	0	0	1.45451E-05	0	3.63628E-06	0	2.18177E-05	0	2.90902E-05	0	1.77752E-10	3.03205E-09	3.2098E-09	0.0032098
3964753768589	396475	3768589	0	0	1.58782E-05	0	3.96954E-06	0	2.38173E-05	0	3.17563E-05	0	1.94043E-10	3.30993E-09	3.50398E-09	0.003504
3965253768589	396525	3768589	0	0	1.71709E-05	0	4.29273E-06	0	2.57564E-05	0	3.43418E-05	0	2.09841E-10	3.57941E-09	3.78926E-09	0.0037893
3965753768589	396575	3768589	0	0	1.801E-05	0	4.50251E-06	0	2.70151E-05	0	3.60201E-05	0	2.20096E-10	3.75434E-09	3.97444E-09	0.0039744
3966253768589	396625	3768589	0	0	1.95598E-05	0	4.88995E-06	0	2.93397E-05	0	3.91196E-05	0	2.39036E-10	4.0774E-09	4.31644E-09	0.0043164
3968253768589	396825	3768589	0	0	3.15673E-05	0	7.89184E-06	0	4.7351E-05	0	6.31347E-05	0	3.85777E-10	6.58047E-09	6.96625E-09	0.0069662
3968753768589	396875	3768589	0	0	3.56547E-05	0	8.91367E-06	0	5.3482E-05	0	7.13094E-05	0	4.35727E-10	7.43251E-09	7.86824E-09	0.0078682
3969253768589	396925	3768589	0	0	4.03468E-05	0	1.00867E-05	0	6.05202E-05	0	8.06937E-05	0	4.93069E-10	8.41063E-09	8.90369E-09	0.0089037
3969753768589	396975	3768589	0	0	4.63317E-05	0	1.15829E-05	0	6.94975E-05	0	9.26634E-05	0	5.66208E-10	9.65822E-09	1.02244E-08	0.0102244
3970253768589	397025	3768589	0	0	5.33724E-05	0	1.33431E-05	0	8.00586E-05	0	0.000106745	0	6.52251E-10	1.11259E-08	1.17782E-08	0.0117782
3970753768589	397075	3768589	0	0	6.14413E-05	0	1.53603E-05	0	9.21619E-05	0	0.000122883	0	7.50859E-10	1.28079E-08	1.35588E-08	0.0135588
3971253768589	397125	3768589	0	0	7.17479E-05	0	1.7937E-05	0	0.000107622	0	0.000143496	0	8.76813E-10	1.49564E-08	1.58332E-08	0.0158332
3971753768589	397175	3768589	0	0	8.36672E-05	0	2.09168E-05	0	0.000125501	0	0.000167334	0	1.02248E-09	1.74411E-08	1.84636E-08	0.0184636
3972253768589	397225	3768589	0	0	9.69977E-05	0	2.42494E-05	0	0.000145497	0	0.000193995	0	1.18539E-09	2.022E-08	2.14053E-08	0.0214053
3972753768589	397275	3768589	0	0	0.000111538	0	2.78844E-05	0	0.000167307	0	0.000223076	0	1.36308E-09	2.3251E-08	2.4614E-08	0.024614
3973253768589	397325	3768589	0	0	0.000126345	0	3.15862E-05	0	0.000189517	0	0.00025269	0	1.54403E-09	2.63376E-08	2.78817E-08	0.0278817
3973753768589	397375	3768589	0	0	0.000138012	0	3.45031E-05	0	0.000207018	0	0.000276025	0	1.68661E-09	2.87698E-08	3.04564E-08	0.0304564
3974253768589	397425	3768589	0	0	0.000140847	0	3.52118E-05	0	0.000211271	0	0.000281695	0	1.72126E-09	2.93608E-08	3.1082E-08	0.031082
3974753768589	397475	3768589	0	0	0.000141122	0	3.52805E-05	0	0.000211683	0	0.000282244	0	1.72462E-09	2.9418E-08	3.11426E-08	0.0311426
3975253768589	397525	3768589	0	0	0.000137362	0	3.43405E-05	0	0.000206043	0	0.000274724	0	1.67867E-09	2.86343E-08	3.03129E-08	0.0303129
3964253768639	396425	3768639	0	0	1.33809E-05	0	3.34523E-06	0	2.00714E-05	0	2.67618E-05	0	1.63525E-10	2.78936E-09	2.95288E-09	0.0029529
3964753768639	396475	3768639	0	0	1.52709E-05	0	3.81772E-06	0	2.29063E-05	0	3.05417E-05	0	1.86621E-10	3.18334E-09	3.36996E-09	0.00337
3965253768639	396525	3768639	0	0	1.57925E-05	0	3.94812E-06	0	2.36887E-05	0	3.1585E-05	0	1.92996E-10	3.29207E-09	3.48507E-09	0.0034851
3965753768639	396575	3768639	0	0	1.72314E-05	0	4.30785E-06	0	2.58471E-05	0	3.44628E-05	0	2.1058E-10	3.59202E-09	3.8026E-09	0.0038026
3966253768639	396625	3768639	0	0	1.94263E-05	0	4.85656E-06	0	2.91394E-05	0	3.88525E-05	0	2.37403E-10	4.04956E-09	4.28696E-09	0.004287
3966753768639	396675	3768639	0	0	2.14498E-05	0	5.36244E-06	0	3.21747E-05	0	4.28995E-05	0	2.62132E-10	4.47138E-09	4.73351E-09	0.0047335
3967253768639	396725	3768639	0	0	2.37706E-05	0	5.94266E-06	0	3.5656E-05	0	4.75413E-05	0	2.90495E-10	4.95518E-09	5.24568E-09	0.0052457
3967753768639	396775	3768639	0	0	2.6346E-05	0	6.5865E-06	0	3.9519E-05	0	5.2692E-05	0	3.21968E-10	5.49204E-09	5.81401E-09	0.005814
3968253768639	396825	3768639	0	0	2.93725E-05	0	7.34312E-06	0	4.40587E-05	0	5.87449E-05	0	3.58954E-10	6.12293E-09	6.48189E-09	0.0064819
3968753768639	396875	3768639	0	0	3.28878E-05	0	8.22195E-06	0	4.93317E-05	0	6.57756E-05	0	4.01914E-10	6.85573E-09	7.25764E-09	0.0072576
3969253768639	396925	3768639	0	0	3.70003E-05	0	9.25009E-06	0	5.55005E-05	0	7.40007E-05	0	4.52172E-10	7.71302E-09	8.1652E-09	0.0081652
3969753768639	396975	3768639	0	0	4.19873E-05	0	1.04968E-05	0	6.2981E-05	0	8.39746E-05	0	5.13117E-10	8.7526E-09	9.26571E-09	0.0092657
3970253768639	397025	3768639	0	0	4.77529E-05	0	1.19382E-05	0	7.16294E-05	0	9.55059E-05	0	5.83577E-10	9.95449E-09	1.05381E-08	0.0105381
3970753768639	397075	3768639	0	0	5.42065E-05	0	1.35516E-05	0	8.13098E-05	0	0.000108413	0	6.62445E-10	1.12998E-08	1.19622E-08	0.0119622
3971253768639	397125	3768639	0	0	6.12271E-05	0	1.53068E-05	0	9.18406E-05	0	0.000122454	0	7.48241E-10	1.27633E-08	1.35115E-08	0.0135115
3971753768639	397175	3768639	0	0	7.12363E-05	0	1.78091E-05	0	0.000106854	0	0.000142473	0	8.70561E-10	1.48498E-08	1.57204E-08	0.0157204
3972253768639	397225	3768639	0	0	8.15051E-05	0	2.03763E-05	0	0.000122258	0	0.00016301	0	9.96054E-10	1.69904E-08	1.79865E-08	0.0179865
3972753768639	397275	3768639	0	0	9.25828E-05	0	2.31457E-05	0	0.000138874	0	0.000185166	0	1.13143E-09	1.92996E-08	2.04311E-08	0.0204311
3973253768639	397325	3768639	0	0	0.000103426	0	2.58565E-05	0	0.000155139	0	0.000206852	0	1.26394E-09	2.156E-08	2.2824E-08	0.022824
3973753768639	397375	3768639	0	0	0.00011219	0	2.80476E-05	0	0.000168286	0	0.000224381	0	1.37105E-09	2.3387E-08	2.47581E-08	0.0247581
3974253768639	397425	3768639	0	0	0.000118075	0	2.95186E-05	0	0.000177112	0	0.000236149	0	1.44296E-09	2.46136E-08	2.60566E-08	0.0260566
3974753768639	397475	3768639	0	0	0.000114839	0	2.87097E-05	0	0.000172258	0	0.000229678	0	1.40342E-09	2.39391E-08	2.53425E-08	0.0253425
3975253768639	397525	3768639	0	0	0.000113418	0	2.83544E-05	0	0.000170126	0	0.000226835	0	1.38605E-09	2.36428E-08	2.50289E-08	0.0250289
3964253768689	396425	3768689	0	0	1.26123E-05	0	3.15308E-06	0	1.89185E-05	0	2.52246E-05	0	1.54132E-10	2.62914E-09	2.78327E-09	0.0027833
3964753768689	396475	3768689	0	0	1.46686E-05	0	3.66715E-06	0	2.20029E-05	0	2.93372E-05	0	1.79261E-10	3.05779E-09	3.23705E-09	0.003237
3965253768689	396525	3768689	0	0	1.58303E-05	0	3.95757E-06	0	2.37454E-05	0	3.16606E-05	0	1.93458E-10	3.29995E-09	3.49341E-09	0.0034934
3965753768689	396575	3768689	0	0	1.71633E-05	0	4.29084E-06	0	2.5745E-05	0	3.43267E-05	0	2.09749E-10	3.57784E-09	3.78759E-09	0.0037876
3966253768689	396625	3768689	0	0	1.86551E-05	0	4.66379E-06	0	2.79827E-05	0	3.73103E-05	0	2.2798E-10	3.88882E-09	4.1168E-09	0.0041168
3966753768689	396675	3768689	0	0	2.03763E-05	0	5.09407E-06	0	3.05644E-05	0	4.07525E-05	0	2.49013E-10	4.2476E-09	4.49661E-09	0.0044966
3967253768689	396725	3768689	0	0	2.23267E-05	0	5.58168E-06	0	3.34901E-05	0	4.46534E-05	0	2.72849E-10	4.65418E-09	4.92703E-09	0.004927
3967753768689	396775	3768689	0	0	2.45846E-05	0	6.14614E-06	0	3.68769E-05	0	4.91692E-05	0	3.00442E-10	5.12486E-09	5.4253E-09	0.0054253
3968253768689	396825	3768689	0	0	2.72053E-05	0	6.80133E-06	0	4.0808E-05	0	5.44106E-05	0	3.3247E-10	5.67117E-09	6.00364E-09	0.0060036
3968753768689	396875	3768689	0	0	3.02897E-05	0	7.57243E-06	0	4.54346E-05	0	6.05795E-05	0	3.70163E-10	6.31414E-09	6.68431E-09	0.0066843

Garvey Reservoir Rehab - Mitigated Facility Electrical System			Demolition - 2025	Demolition - 2026	ite Preparation - 202	te Preparation - 202	Grading - 2025	Grading - 2026	nfrastructure - 202	nfrastructure - 202	Paving - 2025	itectural Coating -	Child Risk			
Unique Identifier	X (UTM)	Y (UTM)	1900	1900	2025	1900	2026	1900	2026	1900	2026	1900	3rd Trimester	0<2	Total	per million
3969253768689	396925	3768689	0	0	3.38177E-05	0	8.45441E-06	0	5.07265E-05	0	6.76353E-05	0	4.13277E-10	7.04957E-09	7.46284E-09	0.0074628
3969753768689	396975	3768689	0	0	3.79252E-05	0	9.48129E-06	0	5.68877E-05	0	7.58503E-05	0	4.63474E-10	7.90581E-09	8.36928E-09	0.0083693
3970253768689	397025	3768689	0	0	4.27105E-05	0	1.06776E-05	0	6.40658E-05	0	8.54211E-05	0	5.21955E-10	8.90336E-09	9.42531E-09	0.0094253
3970753768689	397075	3768689	0	0	4.82872E-05	0	1.20718E-05	0	7.24308E-05	0	9.65744E-05	0	5.90106E-10	1.00659E-08	1.0656E-08	0.010656
3971253768689	397125	3768689	0	0	5.36925E-05	0	1.34231E-05	0	8.05387E-05	0	0.000107385	0	6.56162E-10	1.11926E-08	1.18488E-08	0.0118488
3971753768689	397175	3768689	0	0	6.13682E-05	0	1.53421E-05	0	9.20523E-05	0	0.000122736	0	7.49966E-10	1.27927E-08	1.35427E-08	0.0135427
3972253768689	397225	3768689	0	0	6.95832E-05	0	1.73958E-05	0	0.000104375	0	0.000139166	0	8.5036E-10	1.45052E-08	1.53556E-08	0.0153556
3972753768689	397275	3768689	0	0	7.78512E-05	0	1.94628E-05	0	0.000116777	0	0.000155702	0	9.514E-10	1.62287E-08	1.71801E-08	0.0171801
3973253768689	397325	3768689	0	0	8.59755E-05	0	2.14939E-05	0	0.000128963	0	0.000171951	0	1.05069E-09	1.79223E-08	1.8973E-08	0.018973
3973753768689	397375	3768689	0	0	9.28675E-05	0	2.32169E-05	0	0.000139301	0	0.000185735	0	1.13491E-09	1.9359E-08	2.04939E-08	0.0204939
3974253768689	397425	3768689	0	0	9.76882E-05	0	2.4422E-05	0	0.000146532	0	0.000195376	0	1.19382E-09	2.03639E-08	2.15577E-08	0.0215577
3974753768689	397475	3768689	0	0	9.99183E-05	0	2.49796E-05	0	0.000149877	0	0.000199837	0	1.22108E-09	2.08288E-08	2.20499E-08	0.0220499
3975253768689	397525	3768689	0	0	9.93538E-05	0	2.48385E-05	0	0.000149031	0	0.000198708	0	1.21418E-09	2.07111E-08	2.19253E-08	0.0219253

Garvey Reservoir Rehab - Mitigated Facility Electrical System

Offroad DPM Emissions, Ground Level Concentrations and Health Risk Calculations

Residential Receptors

Phase	Year	Emissions (lbs/day)	Meters	lbs/meter	meters (h1)	lbs/day (H1)	g/s (H1)	meters (h2)	lbs/day (H2)	g/s (H2)	hrs/day
Demolition - 2025	1900		1932.1	0	691.2	0	0	1240.9	0	0	10.00
Demolition - 2026	1900		1932.1	0	691.2	0	0	1240.9	0	0	10.00
Site Preparation - 2025	2025	0.0000	1932.1	0	691.2	0	0	1240.9	0	0	10.00
Site Preparation - 2026	1900		1932.1	0	691.2	0	0	1240.9	0	0	10.00
Grading - 2025	2026	0.0000	1932.1	0	691.2	0	0	1240.9	0	0	10.00
Grading - 2026	1900		1932.1	0	691.2	0	0	1240.9	0	0	10.00
Infrastructure - 2025	2026	0.0001	1932.1	6.52126E-08	691.2	4.50749E-05	5.67932E-07	1240.9	8.09223E-05	1.0196E-06	10.00
Infrastructure - 2026	1900		1932.1	0	691.2	0	0	1240.9	0	0	10.00
Paving - 2025	2026	0.0000	1932.1	0	691.2	0	0	1240.9	0	0	10.00
Architectural Coating - 2026	1900		1932.1	0	691.2	0	0	1240.9	0	0	10.00

		AERMOD Column Identifier:	*5*	*5*	*5*	*5*	*5*	*5*	*5*	*5*	*5*	*5*					
			6	*6*	*6*	*6*	*6*	*6*	*6*	*6*	*6*	*6*				*MAX:*	0.001051
Garvey Reservoir Rehab - Mitigated Facility Electrical System			Demolition - 2025	Demolition - 2026	Site Preparation - 2025	te Preparation - 202	Grading - 2025	Grading - 2026	Infrastructure - 2025	nfrastructure - 2026	Paving - 2025	rchitectural Coating - 202	Child Risk				
Unique Identifier	X (UTM)	Y (UTM)	1900	1900	2025	1900	2026	1900	2026	1900	2026	1900	3rd Trimester	0<2	Total	per million	
396166.283767377.2	396166.28	3767377	0	0	0	0	0	0	4.82584E-08	0	0	0	0	3.93056E-12	3.93056E-12	3.931E-06	
396266.283767377.2	396266.28	3767377	0	0	0	0	0	0	4.93524E-08	0	0	0	0	4.01967E-12	4.01967E-12	4.02E-06	
396366.283767377.2	396366.28	3767377	0	0	0	0	0	0	5.13596E-08	0	0	0	0	4.18315E-12	4.18315E-12	4.183E-06	
396466.283767377.2	396466.28	3767377	0	0	0	0	0	0	5.26977E-08	0	0	0	0	4.29214E-12	4.29214E-12	4.292E-06	
396566.283767377.2	396566.28	3767377	0	0	0	0	0	0	5.77712E-08	0	0	0	0	4.70536E-12	4.70536E-12	4.705E-06	
396666.283767377.2	396666.28	3767377	0	0	0	0	0	0	5.46195E-08	0	0	0	0	4.44866E-12	4.44866E-12	4.449E-06	
396766.283767377.2	396766.28	3767377	0	0	0	0	0	0	5.44053E-08	0	0	0	0	4.43122E-12	4.43122E-12	4.431E-06	
396866.283767377.2	396866.28	3767377	0	0	0	0	0	0	5.44529E-08	0	0	0	0	4.4351E-12	4.4351E-12	4.435E-06	
396966.283767377.2	396966.28	3767377	0	0	0	0	0	0	5.51734E-08	0	0	0	0	4.49378E-12	4.49378E-12	4.494E-06	
397066.283767377.2	397066.28	3767377	0	0	0	0	0	0	5.3782E-08	0	0	0	0	4.38046E-12	4.38046E-12	4.38E-06	
397166.283767377.2	397166.28	3767377	0	0	0	0	0	0	5.30464E-08	0	0	0	0	4.32054E-12	4.32054E-12	4.321E-06	
397266.283767377.2	397266.28	3767377	0	0	0	0	0	0	5.31104E-08	0	0	0	0	4.32575E-12	4.32575E-12	4.326E-06	
397366.283767377.2	397366.28	3767377	0	0	0	0	0	0	5.06893E-08	0	0	0	0	4.12856E-12	4.12856E-12	4.129E-06	
397466.283767377.2	397466.28	3767377	0	0	0	0	0	0	4.56335E-08	0	0	0	0	3.71677E-12	3.71677E-12	3.717E-06	
397566.283767377.2	397566.28	3767377	0	0	0	0	0	0	4.48866E-08	0	0	0	0	3.65594E-12	3.65594E-12	3.656E-06	
397666.283767377.2	397666.28	3767377	0	0	0	0	0	0	4.3569E-08	0	0	0	0	3.54862E-12	3.54862E-12	3.549E-06	
397766.283767377.2	397766.28	3767377	0	0	0	0	0	0	4.49648E-08	0	0	0	0	3.66231E-12	3.66231E-12	3.662E-06	
397866.283767377.2	397866.28	3767377	0	0	0	0	0	0	4.28292E-08	0	0	0	0	3.48837E-12	3.48837E-12	3.488E-06	
396166.283767477.2	396166.28	3767477	0	0	0	0	0	0	5.55344E-08	0	0	0	0	4.52319E-12	4.52319E-12	4.523E-06	
396266.283767477.2	396266.28	3767477	0	0	0	0	0	0	5.4263E-08	0	0	0	0	4.41963E-12	4.41963E-12	4.42E-06	
396366.283767477.2	396366.28	3767477	0	0	0	0	0	0	5.71677E-08	0	0	0	0	4.65621E-12	4.65621E-12	4.656E-06	
396466.283767477.2	396466.28	3767477	0	0	0	0	0	0	6.26129E-08	0	0	0	0	5.09972E-12	5.09972E-12	5.1E-06	
396566.283767477.2	396566.28	3767477	0	0	0	0	0	0	6.34637E-08	0	0	0	0	5.16901E-12	5.16901E-12	5.169E-06	
396666.283767477.2	396666.28	3767477	0	0	0	0	0	0	6.1621E-08	0	0	0	0	5.01892E-12	5.01892E-12	5.019E-06	
396766.283767477.2	396766.28	3767477	0	0	0	0	0	0	6.2103E-08	0	0	0	0	5.05818E-12	5.05818E-12	5.058E-06	
396866.283767477.2	396866.28	3767477	0	0	0	0	0	0	6.24656E-08	0	0	0	0	5.08772E-12	5.08772E-12	5.088E-06	
396966.283767477.2	396966.28	3767477	0	0	0	0	0	0	6.33955E-08	0	0	0	0	5.16345E-12	5.16345E-12	5.163E-06	
397066.283767477.2	397066.28	3767477	0	0	0	0	0	0	6.21772E-08	0	0	0	0	5.06423E-12	5.06423E-12	5.064E-06	
397166.283767477.2	397166.28	3767477	0	0	0	0	0	0	6.02189E-08	0	0	0	0	4.90473E-12	4.90473E-12	4.905E-06	
397266.283767477.2	397266.28	3767477	0	0	0	0	0	0	6.04179E-08	0	0	0	0	4.92094E-12	4.92094E-12	4.921E-06	
397366.283767477.2	397366.28	3767477	0	0	0	0	0	0	5.86004E-08	0	0	0	0	4.7729E-12	4.7729E-12	4.773E-06	
397466.283767477.2	397466.28	3767477	0	0	0	0	0	0	5.28551E-08	0	0	0	0	4.30496E-12	4.30496E-12	4.305E-06	
397566.283767477.2	397566.28	3767477	0	0	0	0	0	0	5.01255E-08	0	0	0	0	4.08264E-12	4.08264E-12	4.083E-06	
397666.283767477.2	397666.28	3767477	0	0	0	0	0	0	4.90262E-08	0	0	0	0	3.9931E-12	3.9931E-12	3.993E-06	
397766.283767477.2	397766.28	3767477	0	0	0	0	0	0	4.78618E-08	0	0	0	0	3.89826E-12	3.89826E-12	3.898E-06	
397866.283767477.2	397866.28	3767477	0	0	0	0	0	0	4.60623E-08	0	0	0	0	3.75169E-12	3.75169E-12	3.752E-06	
396166.283767577.2	396166.28	3767577	0	0	0	0	0	0	5.85404E-08	0	0	0	0	4.76802E-12	4.76802E-12	4.768E-06	
396266.283767577.2	396266.28	3767577	0	0	0	0	0	0	6.01789E-08	0	0	0	0	4.90147E-12	4.90147E-12	4.901E-06	
396366.283767577.2	396366.28	3767577	0	0	0	0	0	0	6.29392E-08	0	0	0	0	5.12629E-12	5.12629E-12	5.126E-06	
396466.283767577.2	396466.28	3767577	0	0	0	0	0	0	6.68318E-08	0	0	0	0	5.44334E-12	5.44334E-12	5.443E-06	
396566.283767577.2	396566.28	3767577	0	0	0	0	0	0	7.42387E-08	0	0	0	0	6.04662E-12	6.04662E-12	6.047E-06	
396666.283767577.2	396666.28	3767577	0	0	0	0	0	0	7.53816E-08	0	0	0	0	6.1397E-12	6.1397E-12	6.14E-06	
396766.283767577.2	396766.28	3767577	0	0	0	0	0	0	7.10828E-08	0	0	0	0	5.78957E-12	5.78957E-12	5.79E-06	
396866.283767577.2	396866.28	3767577	0	0	0	0	0	0	7.2875E-08	0	0	0	0	5.93555E-12	5.93555E-12	5.936E-06	

Garvey Reservoir Rehab - Mitigated Facility Electrical System			Demolition - 2025	Demolition - 2026	Site Preparation - 2025	ite Preparation - 202	Grading - 2025	Grading - 2026	Infrastructure - 2025	nfrastructure - 2026	Paving - 2025	rchitectural Coating - 202	Child Risk			
Unique Identifier	X (UTM)	Y (UTM)	1900	1900	2025	1900	2026	1900	2026	1900	2026	1900	3rd Trimester	0<2	Total	per million
396966.283767577.2	396966.28	3767577	0	0	0	0	0	0	7.38717E-08	0	0	0	0	6.01672E-12	6.01672E-12	6.017E-06
397066.283767577.2	397066.28	3767577	0	0	0	0	0	0	7.38894E-08	0	0	0	0	6.01817E-12	6.01817E-12	6.018E-06
397166.283767577.2	397166.28	3767577	0	0	0	0	0	0	7.11631E-08	0	0	0	0	5.79612E-12	5.79612E-12	5.796E-06
397266.283767577.2	397266.28	3767577	0	0	0	0	0	0	7.02197E-08	0	0	0	0	5.71927E-12	5.71927E-12	5.719E-06
397366.283767577.2	397366.28	3767577	0	0	0	0	0	0	6.84696E-08	0	0	0	0	5.57673E-12	5.57673E-12	5.577E-06
397466.283767577.2	397466.28	3767577	0	0	0	0	0	0	6.09922E-08	0	0	0	0	4.96771E-12	4.96771E-12	4.968E-06
397566.283767577.2	397566.28	3767577	0	0	0	0	0	0	5.75304E-08	0	0	0	0	4.68575E-12	4.68575E-12	4.686E-06
397666.283767577.2	397666.28	3767577	0	0	0	0	0	0	5.44013E-08	0	0	0	0	4.4309E-12	4.4309E-12	4.431E-06
397766.283767577.2	397766.28	3767577	0	0	0	0	0	0	5.23333E-08	0	0	0	0	4.26246E-12	4.26246E-12	4.262E-06
397866.283767577.2	397866.28	3767577	0	0	0	0	0	0	4.97493E-08	0	0	0	0	4.05199E-12	4.05199E-12	4.052E-06
396166.283767677.2	396166.28	3767677	0	0	0	0	0	0	7.08796E-08	0	0	0	0	5.77302E-12	5.77302E-12	5.773E-06
396266.283767677.2	396266.28	3767677	0	0	0	0	0	0	6.70624E-08	0	0	0	0	5.46212E-12	5.46212E-12	5.462E-06
396366.283767677.2	396366.28	3767677	0	0	0	0	0	0	7.14612E-08	0	0	0	0	5.82039E-12	5.82039E-12	5.82E-06
396466.283767677.2	396466.28	3767677	0	0	0	0	0	0	8.45253E-08	0	0	0	0	6.88444E-12	6.88444E-12	6.884E-06
396566.283767677.2	396566.28	3767677	0	0	0	0	0	0	8.5292E-08	0	0	0	0	6.94689E-12	6.94689E-12	6.947E-06
396666.283767677.2	396666.28	3767677	0	0	0	0	0	0	7.98975E-08	0	0	0	0	6.50752E-12	6.50752E-12	6.508E-06
396766.283767677.2	396766.28	3767677	0	0	0	0	0	0	8.31757E-08	0	0	0	0	6.77452E-12	6.77452E-12	6.775E-06
396866.283767677.2	396866.28	3767677	0	0	0	0	0	0	8.78496E-08	0	0	0	0	7.1552E-12	7.1552E-12	7.155E-06
396966.283767677.2	396966.28	3767677	0	0	0	0	0	0	8.88059E-08	0	0	0	0	7.23309E-12	7.23309E-12	7.233E-06
397066.283767677.2	397066.28	3767677	0	0	0	0	0	0	8.85386E-08	0	0	0	0	7.21132E-12	7.21132E-12	7.211E-06
397166.283767677.2	397166.28	3767677	0	0	0	0	0	0	8.65801E-08	0	0	0	0	7.0518E-12	7.0518E-12	7.052E-06
397266.283767677.2	397266.28	3767677	0	0	0	0	0	0	7.93981E-08	0	0	0	0	6.46684E-12	6.46684E-12	6.467E-06
397366.283767677.2	397366.28	3767677	0	0	0	0	0	0	8.07646E-08	0	0	0	0	6.57814E-12	6.57814E-12	6.578E-06
397466.283767677.2	397466.28	3767677	0	0	0	0	0	0	6.9462E-08	0	0	0	0	5.65756E-12	5.65756E-12	5.658E-06
397566.283767677.2	397566.28	3767677	0	0	0	0	0	0	6.66442E-08	0	0	0	0	5.42805E-12	5.42805E-12	5.428E-06
397666.283767677.2	397666.28	3767677	0	0	0	0	0	0	6.27614E-08	0	0	0	0	5.11181E-12	5.11181E-12	5.112E-06
397766.283767677.2	397766.28	3767677	0	0	0	0	0	0	5.85869E-08	0	0	0	0	4.7718E-12	4.7718E-12	4.772E-06
397866.283767677.2	397866.28	3767677	0	0	0	0	0	0	5.5754E-08	0	0	0	0	4.54106E-12	4.54106E-12	4.541E-06
396166.283767777.2	396166.28	3767777	0	0	0	0	0	0	7.9549E-08	0	0	0	0	6.47913E-12	6.47913E-12	6.479E-06
396266.283767777.2	396266.28	3767777	0	0	0	0	0	0	9.03676E-08	0	0	0	0	7.36029E-12	7.36029E-12	7.36E-06
396366.283767777.2	396366.28	3767777	0	0	0	0	0	0	8.79503E-08	0	0	0	0	7.1634E-12	7.1634E-12	7.163E-06
396466.283767777.2	396466.28	3767777	0	0	0	0	0	0	9.28522E-08	0	0	0	0	7.56265E-12	7.56265E-12	7.563E-06
396566.283767777.2	396566.28	3767777	0	0	0	0	0	0	8.79114E-08	0	0	0	0	7.16023E-12	7.16023E-12	7.16E-06
396666.283767777.2	396666.28	3767777	0	0	0	0	0	0	9.2456E-08	0	0	0	0	7.53039E-12	7.53039E-12	7.53E-06
396766.283767777.2	396766.28	3767777	0	0	0	0	0	0	1.0134E-07	0	0	0	0	8.25401E-12	8.25401E-12	8.254E-06
396866.283767777.2	396866.28	3767777	0	0	0	0	0	0	1.08223E-07	0	0	0	0	8.8146E-12	8.8146E-12	8.815E-06
396966.283767777.2	396966.28	3767777	0	0	0	0	0	0	1.06896E-07	0	0	0	0	8.70653E-12	8.70653E-12	8.707E-06
397066.283767777.2	397066.28	3767777	0	0	0	0	0	0	1.07043E-07	0	0	0	0	8.71847E-12	8.71847E-12	8.718E-06
397166.283767777.2	397166.28	3767777	0	0	0	0	0	0	1.07189E-07	0	0	0	0	8.73038E-12	8.73038E-12	8.73E-06
397266.283767777.2	397266.28	3767777	0	0	0	0	0	0	9.97286E-08	0	0	0	0	8.12273E-12	8.12273E-12	8.123E-06
397366.283767777.2	397366.28	3767777	0	0	0	0	0	0	9.77948E-08	0	0	0	0	7.96522E-12	7.96522E-12	7.965E-06
397466.283767777.2	397466.28	3767777	0	0	0	0	0	0	8.4394E-08	0	0	0	0	6.87374E-12	6.87374E-12	6.874E-06
397566.283767777.2	397566.28	3767777	0	0	0	0	0	0	7.78492E-08	0	0	0	0	6.34068E-12	6.34068E-12	6.341E-06
397666.283767777.2	397666.28	3767777	0	0	0	0	0	0	7.40874E-08	0	0	0	0	6.03429E-12	6.03429E-12	6.034E-06
397766.283767777.2	397766.28	3767777	0	0	0	0	0	0	6.61501E-08	0	0	0	0	5.38781E-12	5.38781E-12	5.388E-06
397866.283767777.2	397866.28	3767777	0	0	0	0	0	0	6.03086E-08	0	0	0	0	4.91204E-12	4.91204E-12	4.912E-06
396166.283767877.2	396166.28	3767877	0	0	0	0	0	0	8.7916E-08	0	0	0	0	7.16061E-12	7.16061E-12	7.161E-06
396266.283767877.2	396266.28	3767877	0	0	0	0	0	0	1.01545E-07	0	0	0	0	8.27063E-12	8.27063E-12	8.271E-06
396366.283767877.2	396366.28	3767877	0	0	0	0	0	0	1.07341E-07	0	0	0	0	8.74272E-12	8.74272E-12	8.743E-06
396466.283767877.2	396466.28	3767877	0	0	0	0	0	0	1.01855E-07	0	0	0	0	8.29595E-12	8.29595E-12	8.296E-06
396566.283767877.2	396566.28	3767877	0	0	0	0	0	0	1.0081E-07	0	0	0	0	8.21084E-12	8.21084E-12	8.211E-06
397466.283767877.2	397466.28	3767877	0	0	0	0	0	0	1.18192E-07	0	0	0	0	9.62655E-12	9.62655E-12	9.627E-06
397566.283767877.2	397566.28	3767877	0	0	0	0	0	0	9.30936E-08	0	0	0	0	7.58231E-12	7.58231E-12	7.582E-06
397666.283767877.2	397666.28	3767877	0	0	0	0	0	0	7.84755E-08	0	0	0	0	6.39169E-12	6.39169E-12	6.392E-06
397766.283767877.2	397766.28	3767877	0	0	0	0	0	0	6.9464E-08	0	0	0	0	5.65772E-12	5.65772E-12	5.658E-06
397866.283767877.2	397866.28	3767877	0	0	0	0	0	0	6.95791E-08	0	0	0	0	5.6671E-12	5.6671E-12	5.667E-06
396166.283767977.2	396166.28	3767977	0	0	0	0	0	0	9.21507E-08	0	0	0	0	7.50552E-12	7.50552E-12	7.506E-06
396266.283767977.2	396266.28	3767977	0	0	0	0	0	0	1.0649E-07	0	0	0	0	8.6734E-12	8.6734E-12	8.673E-06
396366.283767977.2	396366.28	3767977	0	0	0	0	0	0	1.1518E-07	0	0	0	0	9.3812E-12	9.3812E-12	9.381E-06
396466.283767977.2	396466.28	3767977	0	0	0	0	0	0	1.10665E-07	0	0	0	0	9.01347E-12	9.01347E-12	9.013E-06
397466.283767977.2	397466.28	3767977	0	0	0	0	0	0	1.39392E-07	0	0	0	0	1.13533E-11	1.13533E-11	1.135E-05
397566.283767977.2	397566.28	3767977	0	0	0	0	0	0	1.12568E-07	0	0	0	0	9.16846E-12	9.16846E-12	9.168E-06
397666.283767977.2	397666.28	3767977	0	0	0	0	0	0	9.34362E-08	0	0	0	0	7.61022E-12	7.61022E-12	7.61E-06
397766.283767977.2	397766.28	3767977	0	0	0	0	0	0	9.41203E-08	0	0	0	0	7.66594E-12	7.66594E-12	7.666E-06
397866.283767977.2	397866.28	3767977	0	0	0	0	0	0	8.60711E-08	0	0	0	0	7.01035E-12	7.01035E-12	7.01E-06
396166.283768077.2	396166.28	3768077	0	0	0	0	0	0	1.24227E-07	0	0	0	0	1.01181E-11	1.01181E-11	1.012E-05
396266.283768077.2	396266.28	3768077	0	0	0	0	0	0	1.17734E-07	0	0	0	0	9.58921E-12	9.58921E-12	9.589E-06
396366.283768077.2	396366.28	3768077	0	0	0	0	0	0	1.27762E-07	0	0	0	0	1.0406E-11	1.0406E-11	1.041E-05
396466.283768077.2	396466.28	3768077	0	0	0	0	0	0	1.38306E-07	0	0	0	0	1.12648E-11	1.12648E-11	1.126E-05
397466.283768077.2	397466.28	3768077	0	0	0	0	0	0	2.41898E-07	0	0	0	0	1.97022E-11	1.97022E-11	1.97E-05
397566.283768077.2	397566.28	3768077	0	0	0	0	0	0	1.91162E-07	0	0	0	0	1.55698E-11	1.55698E-11	1.557E-05

Garvey Reservoir Rehab - Mitigated Facility Electrical System			Demolition - 2025	Demolition - 2026	Site Preparation - 2025	ite Preparation - 202	Grading - 2025	Grading - 2026	Infrastructure - 2025	nfrastructure - 2026	Paving - 2025	rchitectural Coating - 202	Child Risk			
Unique Identifier	X (UTM)	Y (UTM)	1900	1900	2025	1900	2026	1900	2026	1900	2026	1900	3rd Trimester	0<2	Total	per million
397666.283768077.2	397666.28	3768077	0	0	0	0	0	0	1.43419E-07	0	0	0	0	1.16812E-11	1.16812E-11	1.168E-05
397766.283768077.2	397766.28	3768077	0	0	0	0	0	0	1.1198E-07	0	0	0	0	9.12061E-12	9.12061E-12	9.121E-06
397866.283768077.2	397866.28	3768077	0	0	0	0	0	0	9.70612E-08	0	0	0	0	7.90547E-12	7.90547E-12	7.905E-06
396166.283768177.2	396166.28	3768177	0	0	0	0	0	0	1.49824E-07	0	0	0	0	1.22029E-11	1.22029E-11	1.22E-05
396266.283768177.2	396266.28	3768177	0	0	0	0	0	0	1.54745E-07	0	0	0	0	1.26037E-11	1.26037E-11	1.26E-05
396366.283768177.2	396366.28	3768177	0	0	0	0	0	0	1.68458E-07	0	0	0	0	1.37206E-11	1.37206E-11	1.372E-05
396466.283768177.2	396466.28	3768177	0	0	0	0	0	0	1.65874E-07	0	0	0	0	1.35101E-11	1.35101E-11	1.351E-05
397466.283768177.2	397466.28	3768177	0	0	0	0	0	0	5.29026E-07	0	0	0	0	4.30883E-11	4.30883E-11	4.309E-05
397566.283768177.2	397566.28	3768177	0	0	0	0	0	0	2.77513E-07	0	0	0	0	2.26029E-11	2.26029E-11	2.26E-05
397666.283768177.2	397666.28	3768177	0	0	0	0	0	0	1.89379E-07	0	0	0	0	1.54246E-11	1.54246E-11	1.542E-05
397766.283768177.2	397766.28	3768177	0	0	0	0	0	0	1.39652E-07	0	0	0	0	1.13744E-11	1.13744E-11	1.137E-05
397866.283768177.2	397866.28	3768177	0	0	0	0	0	0	1.1459E-07	0	0	0	0	9.33319E-12	9.33319E-12	9.333E-06
396166.283768277.2	396166.28	3768277	0	0	0	0	0	0	1.7819E-07	0	0	0	0	1.45133E-11	1.45133E-11	1.451E-05
396266.283768277.2	396266.28	3768277	0	0	0	0	0	0	1.75353E-07	0	0	0	0	1.42822E-11	1.42822E-11	1.428E-05
396366.283768277.2	396366.28	3768277	0	0	0	0	0	0	1.96843E-07	0	0	0	0	1.60325E-11	1.60325E-11	1.603E-05
396466.283768277.2	396466.28	3768277	0	0	0	0	0	0	2.03696E-07	0	0	0	0	1.65907E-11	1.65907E-11	1.659E-05
397366.283768277.2	397366.28	3768277	0	0	0	0	0	0	4.20457E-06	0	0	0	0	3.42455E-10	3.42455E-10	0.0003425
397466.283768277.2	397466.28	3768277	0	0	0	0	0	0	8.25359E-07	0	0	0	0	6.72241E-11	6.72241E-11	6.722E-05
397566.283768277.2	397566.28	3768277	0	0	0	0	0	0	3.76802E-07	0	0	0	0	3.06899E-11	3.06899E-11	3.069E-05
397666.283768277.2	397666.28	3768277	0	0	0	0	0	0	2.36098E-07	0	0	0	0	1.92298E-11	1.92298E-11	1.923E-05
397766.283768277.2	397766.28	3768277	0	0	0	0	0	0	1.69126E-07	0	0	0	0	1.3775E-11	1.3775E-11	1.378E-05
397866.283768277.2	397866.28	3768277	0	0	0	0	0	0	1.30201E-07	0	0	0	0	1.06047E-11	1.06047E-11	1.06E-05
396166.283768377.2	396166.28	3768377	0	0	0	0	0	0	2.09999E-07	0	0	0	0	1.71041E-11	1.71041E-11	1.71E-05
396266.283768377.2	396266.28	3768377	0	0	0	0	0	0	2.18663E-07	0	0	0	0	1.78097E-11	1.78097E-11	1.781E-05
396366.283768377.2	396366.28	3768377	0	0	0	0	0	0	2.44136E-07	0	0	0	0	1.98845E-11	1.98845E-11	1.988E-05
396466.283768377.2	396466.28	3768377	0	0	0	0	0	0	2.63395E-07	0	0	0	0	2.1453E-11	2.1453E-11	2.145E-05
397266.283768377.2	397266.28	3768377	0	0	0	0	0	0	6.60068E-06	0	0	0	0	5.37614E-10	5.37614E-10	0.0005376
397366.283768377.2	397366.28	3768377	0	0	0	0	0	0	2.96878E-06	0	0	0	0	2.41802E-10	2.41802E-10	0.0002418
397466.283768377.2	397466.28	3768377	0	0	0	0	0	0	9.57957E-07	0	0	0	0	7.80239E-11	7.80239E-11	7.802E-05
397566.283768377.2	397566.28	3768377	0	0	0	0	0	0	4.59895E-07	0	0	0	0	3.74577E-11	3.74577E-11	3.746E-05
397666.283768377.2	397666.28	3768377	0	0	0	0	0	0	2.78761E-07	0	0	0	0	2.27046E-11	2.27046E-11	2.27E-05
397766.283768377.2	397766.28	3768377	0	0	0	0	0	0	1.95974E-07	0	0	0	0	1.59617E-11	1.59617E-11	1.596E-05
397866.283768377.2	397866.28	3768377	0	0	0	0	0	0	1.40971E-07	0	0	0	0	1.14819E-11	1.14819E-11	1.148E-05
396166.283768477.2	396166.28	3768477	0	0	0	0	0	0	2.57641E-07	0	0	0	0	2.09844E-11	2.09844E-11	2.098E-05
396266.283768477.2	396266.28	3768477	0	0	0	0	0	0	2.77657E-07	0	0	0	0	2.26147E-11	2.26147E-11	2.261E-05
396366.283768477.2	396366.28	3768477	0	0	0	0	0	0	3.07757E-07	0	0	0	0	2.50663E-11	2.50663E-11	2.507E-05
396466.283768477.2	396466.28	3768477	0	0	0	0	0	0	3.44617E-07	0	0	0	0	2.80684E-11	2.80684E-11	2.807E-05
397166.283768477.2	397166.28	3768477	0	0	0	0	0	0	1.2268E-06	0	0	0	0	9.99207E-11	9.99207E-11	9.992E-05
397266.283768477.2	397266.28	3768477	0	0	0	0	0	0	6.70005E-06	0	0	0	0	5.45708E-10	5.45708E-10	0.0005457
397366.283768477.2	397366.28	3768477	0	0	0	0	0	0	2.7145E-06	0	0	0	0	2.21091E-10	2.21091E-10	0.0002211
397466.283768477.2	397466.28	3768477	0	0	0	0	0	0	8.8282E-07	0	0	0	0	7.19042E-11	7.19042E-11	7.19E-05
397566.283768477.2	397566.28	3768477	0	0	0	0	0	0	5.27707E-07	0	0	0	0	4.29808E-11	4.29808E-11	4.298E-05
397666.283768477.2	397666.28	3768477	0	0	0	0	0	0	3.27457E-07	0	0	0	0	2.66708E-11	2.66708E-11	2.667E-05
397766.283768477.2	397766.28	3768477	0	0	0	0	0	0	2.07168E-07	0	0	0	0	1.68734E-11	1.68734E-11	1.687E-05
397866.283768477.2	397866.28	3768477	0	0	0	0	0	0	1.61501E-07	0	0	0	0	1.3154E-11	1.3154E-11	1.315E-05
396166.283768577.2	396166.28	3768577	0	0	0	0	0	0	3.27836E-07	0	0	0	0	2.67017E-11	2.67017E-11	2.67E-05
396266.283768577.2	396266.28	3768577	0	0	0	0	0	0	3.69551E-07	0	0	0	0	3.00993E-11	3.00993E-11	3.01E-05
396366.283768577.2	396366.28	3768577	0	0	0	0	0	0	3.98699E-07	0	0	0	0	3.24733E-11	3.24733E-11	3.247E-05
396466.283768577.2	396466.28	3768577	0	0	0	0	0	0	4.78759E-07	0	0	0	0	3.89941E-11	3.89941E-11	3.899E-05
396566.283768577.2	396566.28	3768577	0	0	0	0	0	0	4.68876E-07	0	0	0	0	3.81891E-11	3.81891E-11	3.819E-05
396866.283768577.2	396866.28	3768577	0	0	0	0	0	0	6.0002E-07	0	0	0	0	4.88706E-11	4.88706E-11	4.887E-05
396966.283768577.2	396966.28	3768577	0	0	0	0	0	0	6.96704E-07	0	0	0	0	5.67454E-11	5.67454E-11	5.675E-05
397066.283768577.2	397066.28	3768577	0	0	0	0	0	0	8.61054E-07	0	0	0	0	7.01314E-11	7.01314E-11	7.013E-05
397166.283768577.2	397166.28	3768577	0	0	0	0	0	0	1.47425E-06	0	0	0	0	1.20075E-10	1.20075E-10	0.0001201
397266.283768577.2	397266.28	3768577	0	0	0	0	0	0	6.49954E-06	0	0	0	0	5.29376E-10	5.29376E-10	0.0005294
397366.283768577.2	397366.28	3768577	0	0	0	0	0	0	2.72239E-06	0	0	0	0	2.21734E-10	2.21734E-10	0.0002217
397466.283768577.2	397466.28	3768577	0	0	0	0	0	0	8.72314E-07	0	0	0	0	7.10485E-11	7.10485E-11	7.105E-05
397566.283768577.2	397566.28	3768577	0	0	0	0	0	0	5.22169E-07	0	0	0	0	4.25298E-11	4.25298E-11	4.253E-05
397666.283768577.2	397666.28	3768577	0	0	0	0	0	0	3.47143E-07	0	0	0	0	2.82742E-11	2.82742E-11	2.827E-05
397766.283768577.2	397766.28	3768577	0	0	0	0	0	0	2.47039E-07	0	0	0	0	2.01209E-11	2.01209E-11	2.012E-05
397866.283768577.2	397866.28	3768577	0	0	0	0	0	0	1.80373E-07	0	0	0	0	1.46911E-11	1.46911E-11	1.469E-05
396166.283768677.2	396166.28	3768677	0	0	0	0	0	0	5.75926E-07	0	0	0	0	4.69082E-11	4.69082E-11	4.691E-05
396266.283768677.2	396266.28	3768677	0	0	0	0	0	0	6.57528E-07	0	0	0	0	5.35546E-11	5.35546E-11	5.355E-05
396366.283768677.2	396366.28	3768677	0	0	0	0	0	0	6.38467E-07	0	0	0	0	5.20021E-11	5.20021E-11	5.2E-05
396466.283768677.2	396466.28	3768677	0	0	0	0	0	0	7.83836E-07	0	0	0	0	6.38421E-11	6.38421E-11	6.384E-05
396566.283768677.2	396566.28	3768677	0	0	0	0	0	0	7.92388E-07	0	0	0	0	6.45387E-11	6.45387E-11	6.454E-05
396666.283768677.2	396666.28	3768677	0	0	0	0	0	0	8.08991E-07	0	0	0	0	6.5891E-11	6.5891E-11	6.589E-05
396766.283768677.2	396766.28	3768677	0	0	0	0	0	0	8.39518E-07	0	0	0	0	6.83773E-11	6.83773E-11	6.838E-05
396866.283768677.2	396866.28	3768677	0	0	0	0	0	0	9.32354E-07	0	0	0	0	7.59386E-11	7.59386E-11	7.594E-05
396966.283768677.2	396966.28	3768677	0	0	0	0	0	0	1.02056E-06	0	0	0	0	8.3123E-11	8.3123E-11	8.312E-05
397066.283768677.2	397066.28	3768677	0	0	0	0	0	0	1.18384E-06	0	0	0	0	9.64219E-11	9.64219E-11	9.642E-05

Garvey Reservoir Rehab - Mitigated Facility Electrical System			Demolition - 2025	Demolition - 2026	Site Preparation - 2025	te Preparation - 202	Grading - 2025	Grading - 2026	Infrastructure - 2025	nfrastructure - 2026	Paving - 2025	rchitectural Coating - 202	Child Risk			
Unique Identifier	X (UTM)	Y (UTM)	1900	1900	2025	1900	2026	1900	2026	1900	2026	1900	3rd Trimester	0<2	Total	per million
397166.283768677.2	397166.28	3768677	0	0	0	0	0	0	1.85806E-06	0	0	0	0	1.51336E-10	1.51336E-10	0.0001513
397366.283768677.2	397366.28	3768677	0	0	0	0	0	0	2.47083E-06	0	0	0	0	2.01245E-10	2.01245E-10	0.0002012
397466.283768677.2	397466.28	3768677	0	0	0	0	0	0	9.95508E-07	0	0	0	0	8.10824E-11	8.10824E-11	8.108E-05
397566.283768677.2	397566.28	3768677	0	0	0	0	0	0	5.42881E-07	0	0	0	0	4.42168E-11	4.42168E-11	4.422E-05
397666.283768677.2	397666.28	3768677	0	0	0	0	0	0	3.55687E-07	0	0	0	0	2.89701E-11	2.89701E-11	2.897E-05
397766.283768677.2	397766.28	3768677	0	0	0	0	0	0	2.62349E-07	0	0	0	0	2.13679E-11	2.13679E-11	2.137E-05
397866.283768677.2	397866.28	3768677	0	0	0	0	0	0	1.9264E-07	0	0	0	0	1.56902E-11	1.56902E-11	1.569E-05
396166.283768777.2	396166.28	3768777	0	0	0	0	0	0	1.67232E-06	0	0	0	0	1.36208E-10	1.36208E-10	0.0001362
396266.283768777.2	396266.28	3768777	0	0	0	0	0	0	2.07798E-06	0	0	0	0	1.69248E-10	1.69248E-10	0.0001692
396366.283768777.2	396366.28	3768777	0	0	0	0	0	0	1.52339E-06	0	0	0	0	1.24078E-10	1.24078E-10	0.0001241
396466.283768777.2	396466.28	3768777	0	0	0	0	0	0	1.99065E-06	0	0	0	0	1.62135E-10	1.62135E-10	0.0001621
396566.283768777.2	396566.28	3768777	0	0	0	0	0	0	2.13172E-06	0	0	0	0	1.73625E-10	1.73625E-10	0.0001736
396666.283768777.2	396666.28	3768777	0	0	0	0	0	0	2.13097E-06	0	0	0	0	1.73564E-10	1.73564E-10	0.0001736
396766.283768777.2	396766.28	3768777	0	0	0	0	0	0	2.20438E-06	0	0	0	0	1.79543E-10	1.79543E-10	0.0001795
396866.283768777.2	396866.28	3768777	0	0	0	0	0	0	2.29184E-06	0	0	0	0	1.86666E-10	1.86666E-10	0.0001867
396966.283768777.2	396966.28	3768777	0	0	0	0	0	0	2.34836E-06	0	0	0	0	1.9127E-10	1.9127E-10	0.0001913
397066.283768777.2	397066.28	3768777	0	0	0	0	0	0	2.52992E-06	0	0	0	0	2.06057E-10	2.06057E-10	0.0002061
397166.283768777.2	397166.28	3768777	0	0	0	0	0	0	3.04664E-06	0	0	0	0	2.48144E-10	2.48144E-10	0.0002481
397266.283768777.2	397266.28	3768777	0	0	0	0	0	0	9.71729E-06	0	0	0	0	7.91457E-10	7.91457E-10	0.0007915
397366.283768777.2	397366.28	3768777	0	0	0	0	0	0	3.37633E-06	0	0	0	0	2.74997E-10	2.74997E-10	0.000275
397466.283768777.2	397466.28	3768777	0	0	0	0	0	0	1.18753E-06	0	0	0	0	9.67223E-11	9.67223E-11	9.672E-05
397566.283768777.2	397566.28	3768777	0	0	0	0	0	0	6.36904E-07	0	0	0	0	5.18747E-11	5.18747E-11	5.187E-05
397666.283768777.2	397666.28	3768777	0	0	0	0	0	0	4.00561E-07	0	0	0	0	3.2625E-11	3.2625E-11	3.262E-05
397766.283768777.2	397766.28	3768777	0	0	0	0	0	0	2.74228E-07	0	0	0	0	2.23354E-11	2.23354E-11	2.234E-05
397866.283768777.2	397866.28	3768777	0	0	0	0	0	0	1.99621E-07	0	0	0	0	1.62588E-11	1.62588E-11	1.626E-05
396166.283768877.2	396166.28	3768877	0	0	0	0	0	0	6.73295E-06	0	0	0	0	5.48387E-10	5.48387E-10	0.0005484
396266.283768877.2	396266.28	3768877	0	0	0	0	0	0	8.6713E-06	0	0	0	0	7.06263E-10	7.06263E-10	0.0007063
396366.283768877.2	396366.28	3768877	0	0	0	0	0	0	8.49094E-06	0	0	0	0	6.91573E-10	6.91573E-10	0.0006916
396466.283768877.2	396466.28	3768877	0	0	0	0	0	0	9.35342E-06	0	0	0	0	7.6182E-10	7.6182E-10	0.0007618
396566.283768877.2	396566.28	3768877	0	0	0	0	0	0	8.82157E-06	0	0	0	0	7.18502E-10	7.18502E-10	0.0007185
396666.283768877.2	396666.28	3768877	0	0	0	0	0	0	9.58412E-06	0	0	0	0	7.8061E-10	7.8061E-10	0.0007806
396766.283768877.2	396766.28	3768877	0	0	0	0	0	0	9.27598E-06	0	0	0	0	7.55512E-10	7.55512E-10	0.0007555
396866.283768877.2	396866.28	3768877	0	0	0	0	0	0	9.01067E-06	0	0	0	0	7.33904E-10	7.33904E-10	0.0007339
396966.283768877.2	396966.28	3768877	0	0	0	0	0	0	8.6645E-06	0	0	0	0	7.05709E-10	7.05709E-10	0.0007057
397066.283768877.2	397066.28	3768877	0	0	0	0	0	0	8.7596E-06	0	0	0	0	7.13454E-10	7.13454E-10	0.0007135
397166.283768877.2	397166.28	3768877	0	0	0	0	0	0	9.00308E-06	0	0	0	0	7.33286E-10	7.33286E-10	0.0007333
397266.283768877.2	397266.28	3768877	0	0	0	0	0	0	9.45846E-06	0	0	0	0	7.70376E-10	7.70376E-10	0.0007704
397366.283768877.2	397366.28	3768877	0	0	0	0	0	0	4.65064E-06	0	0	0	0	3.78787E-10	3.78787E-10	0.0003788
397466.283768877.2	397466.28	3768877	0	0	0	0	0	0	1.2446E-06	0	0	0	0	1.0137E-10	1.0137E-10	0.0001014
397566.283768877.2	397566.28	3768877	0	0	0	0	0	0	6.36416E-07	0	0	0	0	5.1835E-11	5.1835E-11	5.183E-05
397666.283768877.2	397666.28	3768877	0	0	0	0	0	0	3.94762E-07	0	0	0	0	3.21527E-11	3.21527E-11	3.215E-05
397766.283768877.2	397766.28	3768877	0	0	0	0	0	0	2.72878E-07	0	0	0	0	2.22254E-11	2.22254E-11	2.223E-05
397866.283768877.2	397866.28	3768877	0	0	0	0	0	0	2.01962E-07	0	0	0	0	1.64495E-11	1.64495E-11	1.645E-05
3964253767739	396425	3767739	0	0	0	0	0	0	9.0768E-08	0	0	0	0	7.3929E-12	7.3929E-12	7.393E-06
3964753767739	396475	3767739	0	0	0	0	0	0	9.29366E-08	0	0	0	0	7.56953E-12	7.56953E-12	7.57E-06
3965253767739	396525	3767739	0	0	0	0	0	0	8.6624E-08	0	0	0	0	7.05538E-12	7.05538E-12	7.055E-06
3965753767739	396575	3767739	0	0	0	0	0	0	8.91282E-08	0	0	0	0	7.25934E-12	7.25934E-12	7.259E-06
3966253767739	396625	3767739	0	0	0	0	0	0	8.56001E-08	0	0	0	0	6.97198E-12	6.97198E-12	6.972E-06
3966753767739	396675	3767739	0	0	0	0	0	0	8.75942E-08	0	0	0	0	7.1344E-12	7.1344E-12	7.134E-06
3967253767739	396725	3767739	0	0	0	0	0	0	9.15443E-08	0	0	0	0	7.45613E-12	7.45613E-12	7.456E-06
3967753767739	396775	3767739	0	0	0	0	0	0	9.23137E-08	0	0	0	0	7.5188E-12	7.5188E-12	7.519E-06
3968253767739	396825	3767739	0	0	0	0	0	0	9.75158E-08	0	0	0	0	7.9425E-12	7.9425E-12	7.942E-06
3968753767739	396875	3767739	0	0	0	0	0	0	1.00356E-07	0	0	0	0	8.17382E-12	8.17382E-12	8.174E-06
3969253767739	396925	3767739	0	0	0	0	0	0	1.00079E-07	0	0	0	0	8.15125E-12	8.15125E-12	8.151E-06
3969753767739	396975	3767739	0	0	0	0	0	0	9.94142E-08	0	0	0	0	8.09712E-12	8.09712E-12	8.097E-06
3970253767739	397025	3767739	0	0	0	0	0	0	9.89956E-08	0	0	0	0	8.06303E-12	8.06303E-12	8.063E-06
3970753767739	397075	3767739	0	0	0	0	0	0	9.95011E-08	0	0	0	0	8.10419E-12	8.10419E-12	8.104E-06
3971253767739	397125	3767739	0	0	0	0	0	0	9.96226E-08	0	0	0	0	8.11409E-12	8.11409E-12	8.114E-06
3971753767739	397175	3767739	0	0	0	0	0	0	9.83126E-08	0	0	0	0	8.0074E-12	8.0074E-12	8.007E-06
3972253767739	397225	3767739	0	0	0	0	0	0	9.62264E-08	0	0	0	0	7.83748E-12	7.83748E-12	7.837E-06
3972753767739	397275	3767739	0	0	0	0	0	0	9.0753E-08	0	0	0	0	7.39168E-12	7.39168E-12	7.392E-06
3973253767739	397325	3767739	0	0	0	0	0	0	9.07893E-08	0	0	0	0	7.39464E-12	7.39464E-12	7.395E-06
3973753767739	397375	3767739	0	0	0	0	0	0	9.04884E-08	0	0	0	0	7.37013E-12	7.37013E-12	7.37E-06
3974253767739	397425	3767739	0	0	0	0	0	0	8.80578E-08	0	0	0	0	7.17216E-12	7.17216E-12	7.172E-06
3974753767739	397475	3767739	0	0	0	0	0	0	7.77992E-08	0	0	0	0	6.33661E-12	6.33661E-12	6.337E-06
3975253767739	397525	3767739	0	0	0	0	0	0	7.52087E-08	0	0	0	0	6.12562E-12	6.12562E-12	6.126E-06
3964253767789	396425	3767789	0	0	0	0	0	0	9.69611E-08	0	0	0	0	7.89732E-12	7.89732E-12	7.897E-06
3964753767789	396475	3767789	0	0	0	0	0	0	9.3413E-08	0	0	0	0	7.60833E-12	7.60833E-12	7.608E-06
3965253767789	396525	3767789	0	0	0	0	0	0	8.84707E-08	0	0	0	0	7.20579E-12	7.20579E-12	7.206E-06
3965753767789	396575	3767789	0	0	0	0	0	0	8.95415E-08	0	0	0	0	7.29301E-12	7.29301E-12	7.293E-06
3966253767789	396625	3767789	0	0	0	0	0	0	9.1899E-08	0	0	0	0	7.48502E-12	7.48502E-12	7.485E-06

Garvey Reservoir Rehab - Mitigated Facility Electrical System			Demolition - 2025	Demolition - 2026	Site Preparation - 2025	te Preparation - 202	Grading - 2025	Grading - 2026	Infrastructure - 2025	nfrastructure - 2026	Paving - 2025	rchitectural Coating - 202	Child Risk			
Unique Identifier	X (UTM)	Y (UTM)	1900	1900	2025	1900	2026	1900	2026	1900	2026	1900	3rd Trimester	0<2	Total	per million
3966753767789	396675	3767789	0	0	0	0	0	0	9.46584E-08	0	0	0	0	7.70976E-12	7.70976E-12	7.71E-06
3967253767789	396725	3767789	0	0	0	0	0	0	1.02105E-07	0	0	0	0	8.31629E-12	8.31629E-12	8.316E-06
3967753767789	396775	3767789	0	0	0	0	0	0	1.04588E-07	0	0	0	0	8.51851E-12	8.51851E-12	8.519E-06
3968253767789	396825	3767789	0	0	0	0	0	0	1.09274E-07	0	0	0	0	8.90016E-12	8.90016E-12	8.9E-06
3968753767789	396875	3767789	0	0	0	0	0	0	1.10835E-07	0	0	0	0	9.02731E-12	9.02731E-12	9.027E-06
3969253767789	396925	3767789	0	0	0	0	0	0	1.10785E-07	0	0	0	0	9.02323E-12	9.02323E-12	9.023E-06
3969753767789	396975	3767789	0	0	0	0	0	0	1.09421E-07	0	0	0	0	8.91219E-12	8.91219E-12	8.912E-06
3970253767789	397025	3767789	0	0	0	0	0	0	1.0881E-07	0	0	0	0	8.86237E-12	8.86237E-12	8.862E-06
3970753767789	397075	3767789	0	0	0	0	0	0	1.09829E-07	0	0	0	0	8.94537E-12	8.94537E-12	8.945E-06
3971253767789	397125	3767789	0	0	0	0	0	0	1.10623E-07	0	0	0	0	9.01005E-12	9.01005E-12	9.01E-06
3971753767789	397175	3767789	0	0	0	0	0	0	1.10126E-07	0	0	0	0	8.96957E-12	8.96957E-12	8.97E-06
3972253767789	397225	3767789	0	0	0	0	0	0	1.08747E-07	0	0	0	0	8.85728E-12	8.85728E-12	8.857E-06
3972753767789	397275	3767789	0	0	0	0	0	0	1.02727E-07	0	0	0	0	8.36697E-12	8.36697E-12	8.367E-06
3973253767789	397325	3767789	0	0	0	0	0	0	1.00232E-07	0	0	0	0	8.16369E-12	8.16369E-12	8.164E-06
3973753767789	397375	3767789	0	0	0	0	0	0	1.00552E-07	0	0	0	0	8.18976E-12	8.18976E-12	8.19E-06
3974253767789	397425	3767789	0	0	0	0	0	0	9.8493E-08	0	0	0	0	8.02209E-12	8.02209E-12	8.022E-06
3974753767789	397475	3767789	0	0	0	0	0	0	8.58282E-08	0	0	0	0	6.99056E-12	6.99056E-12	6.991E-06
3975253767789	397525	3767789	0	0	0	0	0	0	8.32442E-08	0	0	0	0	6.7801E-12	6.7801E-12	6.78E-06
3964253767839	396425	3767839	0	0	0	0	0	0	1.0352E-07	0	0	0	0	8.43152E-12	8.43152E-12	8.432E-06
3964753767839	396475	3767839	0	0	0	0	0	0	1.02861E-07	0	0	0	0	8.37787E-12	8.37787E-12	8.378E-06
3965253767839	396525	3767839	0	0	0	0	0	0	9.32844E-08	0	0	0	0	7.59786E-12	7.59786E-12	7.598E-06
3965753767839	396575	3767839	0	0	0	0	0	0	9.5963E-08	0	0	0	0	7.81603E-12	7.81603E-12	7.816E-06
3966253767839	396625	3767839	0	0	0	0	0	0	9.88542E-08	0	0	0	0	8.05151E-12	8.05151E-12	8.052E-06
3966753767839	396675	3767839	0	0	0	0	0	0	1.10261E-07	0	0	0	0	8.98059E-12	8.98059E-12	8.981E-06
3967253767839	396725	3767839	0	0	0	0	0	0	1.15507E-07	0	0	0	0	9.40788E-12	9.40788E-12	9.408E-06
3967753767839	396775	3767839	0	0	0	0	0	0	1.18535E-07	0	0	0	0	9.65444E-12	9.65444E-12	9.654E-06
3968253767839	396825	3767839	0	0	0	0	0	0	1.21489E-07	0	0	0	0	9.89509E-12	9.89509E-12	9.895E-06
3968753767839	396875	3767839	0	0	0	0	0	0	1.22916E-07	0	0	0	0	1.00113E-11	1.00113E-11	1.001E-05
3969253767839	396925	3767839	0	0	0	0	0	0	1.23286E-07	0	0	0	0	1.00415E-11	1.00415E-11	1.004E-05
3969753767839	396975	3767839	0	0	0	0	0	0	1.22016E-07	0	0	0	0	9.93802E-12	9.93802E-12	9.938E-06
3970253767839	397025	3767839	0	0	0	0	0	0	1.21042E-07	0	0	0	0	9.8587E-12	9.8587E-12	9.859E-06
3970753767839	397075	3767839	0	0	0	0	0	0	1.23654E-07	0	0	0	0	1.00714E-11	1.00714E-11	1.007E-05
3971253767839	397125	3767839	0	0	0	0	0	0	1.25927E-07	0	0	0	0	1.02566E-11	1.02566E-11	1.026E-05
3971753767839	397175	3767839	0	0	0	0	0	0	1.24263E-07	0	0	0	0	1.0121E-11	1.0121E-11	1.012E-05
3972253767839	397225	3767839	0	0	0	0	0	0	1.19468E-07	0	0	0	0	9.73046E-12	9.73046E-12	9.73E-06
3972753767839	397275	3767839	0	0	0	0	0	0	1.13171E-07	0	0	0	0	9.21761E-12	9.21761E-12	9.218E-06
3973253767839	397325	3767839	0	0	0	0	0	0	1.07894E-07	0	0	0	0	8.78776E-12	8.78776E-12	8.788E-06
3973753767839	397375	3767839	0	0	0	0	0	0	1.12239E-07	0	0	0	0	9.14168E-12	9.14168E-12	9.142E-06
3974753767839	397475	3767839	0	0	0	0	0	0	1.05798E-07	0	0	0	0	8.61705E-12	8.61705E-12	8.617E-06
3975253767839	397525	3767839	0	0	0	0	0	0	9.04213E-08	0	0	0	0	7.36466E-12	7.36466E-12	7.365E-06
3964253767889	396425	3767889	0	0	0	0	0	0	1.09465E-07	0	0	0	0	8.91571E-12	8.91571E-12	8.916E-06
3964753767889	396475	3767889	0	0	0	0	0	0	9.73195E-08	0	0	0	0	7.92651E-12	7.92651E-12	7.927E-06
3965253767889	396525	3767889	0	0	0	0	0	0	9.98772E-08	0	0	0	0	8.13483E-12	8.13483E-12	8.135E-06
3965753767889	396575	3767889	0	0	0	0	0	0	1.04401E-07	0	0	0	0	8.50324E-12	8.50324E-12	8.503E-06
3974753767889	397475	3767889	0	0	0	0	0	0	1.14784E-07	0	0	0	0	9.34897E-12	9.34897E-12	9.349E-06
3975253767889	397525	3767889	0	0	0	0	0	0	9.97465E-08	0	0	0	0	8.12419E-12	8.12419E-12	8.124E-06
3964253767939	396425	3767939	0	0	0	0	0	0	1.16207E-07	0	0	0	0	9.46488E-12	9.46488E-12	9.465E-06
3964753767939	396475	3767939	0	0	0	0	0	0	1.04453E-07	0	0	0	0	8.50751E-12	8.50751E-12	8.508E-06
3965253767939	396525	3767939	0	0	0	0	0	0	1.08194E-07	0	0	0	0	8.81224E-12	8.81224E-12	8.812E-06
3974753767939	397475	3767939	0	0	0	0	0	0	1.21961E-07	0	0	0	0	9.93355E-12	9.93355E-12	9.934E-06
3975253767939	397525	3767939	0	0	0	0	0	0	1.1149E-07	0	0	0	0	9.08064E-12	9.08064E-12	9.081E-06
3964253767989	396425	3767989	0	0	0	0	0	0	1.14007E-07	0	0	0	0	9.28566E-12	9.28566E-12	9.286E-06
3964753767989	396475	3767989	0	0	0	0	0	0	1.13513E-07	0	0	0	0	9.24546E-12	9.24546E-12	9.245E-06
3974753767989	397475	3767989	0	0	0	0	0	0	1.40162E-07	0	0	0	0	1.14159E-11	1.14159E-11	1.142E-05
3975253767989	397525	3767989	0	0	0	0	0	0	1.27033E-07	0	0	0	0	1.03466E-11	1.03466E-11	1.035E-05
3964253768039	396425	3768039	0	0	0	0	0	0	1.22905E-07	0	0	0	0	1.00104E-11	1.00104E-11	1.001E-05
3964753768039	396475	3768039	0	0	0	0	0	0	1.26995E-07	0	0	0	0	1.03435E-11	1.03435E-11	1.034E-05
3974753768039	397475	3768039	0	0	0	0	0	0	1.87124E-07	0	0	0	0	1.52409E-11	1.52409E-11	1.524E-05
3975253768039	397525	3768039	0	0	0	0	0	0	1.75103E-07	0	0	0	0	1.42619E-11	1.42619E-11	1.426E-05
3964253768089	396425	3768089	0	0	0	0	0	0	1.35536E-07	0	0	0	0	1.10392E-11	1.10392E-11	1.104E-05
3964753768089	396475	3768089	0	0	0	0	0	0	1.42454E-07	0	0	0	0	1.16026E-11	1.16026E-11	1.16E-05
3974753768089	397475	3768089	0	0	0	0	0	0	2.51867E-07	0	0	0	0	2.05142E-11	2.05142E-11	2.051E-05
3975253768089	397525	3768089	0	0	0	0	0	0	2.31961E-07	0	0	0	0	1.88928E-11	1.88928E-11	1.889E-05
3964253768139	396425	3768139	0	0	0	0	0	0	1.6877E-07	0	0	0	0	1.3746E-11	1.3746E-11	1.375E-05
3964753768139	396475	3768139	0	0	0	0	0	0	1.55458E-07	0	0	0	0	1.26618E-11	1.26618E-11	1.266E-05
3974253768139	397425	3768139	0	0	0	0	0	0	5.34334E-07	0	0	0	0	4.35206E-11	4.35206E-11	4.352E-05
3974753768139	397475	3768139	0	0	0	0	0	0	3.87108E-07	0	0	0	0	3.15292E-11	3.15292E-11	3.153E-05
3975253768139	397525	3768139	0	0	0	0	0	0	2.92081E-07	0	0	0	0	2.37895E-11	2.37895E-11	2.379E-05
3964253768189	396425	3768189	0	0	0	0	0	0	1.81825E-07	0	0	0	0	1.48093E-11	1.48093E-11	1.481E-05
3964753768189	396475	3768189	0	0	0	0	0	0	1.70179E-07	0	0	0	0	1.38608E-11	1.38608E-11	1.386E-05
3973753768189	397375	3768189	0	0	0	0	0	0	3.16724E-06	0	0	0	0	2.57966E-10	2.57966E-10	0.000258

Garvey Reservoir Rehab - Mitigated Facility Electrical System			Demolition - 2025	Demolition - 2026	Site Preparation - 2025	ite Preparation - 202	Grading - 2025	Grading - 2026	Infrastructure - 2025	nfrastructure - 2026	Paving - 2025	rchitectural Coating - 202	Child Risk			
Unique Identifier	X (UTM)	Y (UTM)	1900	1900	2025	1900	2026	1900	2026	1900	2026	1900	3rd Trimester	0<2	Total	per million
3974253768189	397425	3768189	0	0	0	0	0	0	9.14856E-07	0	0	0	0	7.45134E-11	7.45134E-11	7.451E-05
3974753768189	397475	3768189	0	0	0	0	0	0	5.24195E-07	0	0	0	0	4.26948E-11	4.26948E-11	4.269E-05
3975253768189	397525	3768189	0	0	0	0	0	0	3.60921E-07	0	0	0	0	2.93964E-11	2.93964E-11	2.94E-05
3964253768239	396425	3768239	0	0	0	0	0	0	1.96791E-07	0	0	0	0	1.60283E-11	1.60283E-11	1.603E-05
3964753768239	396475	3768239	0	0	0	0	0	0	1.88175E-07	0	0	0	0	1.53265E-11	1.53265E-11	1.533E-05
3973753768239	397375	3768239	0	0	0	0	0	0	4.61395E-06	0	0	0	0	3.75798E-10	3.75798E-10	0.0003758
3974253768239	397425	3768239	0	0	0	0	0	0	1.17331E-06	0	0	0	0	9.55639E-11	9.55639E-11	9.556E-05
3974753768239	397475	3768239	0	0	0	0	0	0	6.32611E-07	0	0	0	0	5.15251E-11	5.15251E-11	5.153E-05
3975253768239	397525	3768239	0	0	0	0	0	0	4.29129E-07	0	0	0	0	3.49518E-11	3.49518E-11	3.495E-05
3964253768289	396425	3768289	0	0	0	0	0	0	2.10651E-07	0	0	0	0	1.71572E-11	1.71572E-11	1.716E-05
3964753768289	396475	3768289	0	0	0	0	0	0	2.09652E-07	0	0	0	0	1.70758E-11	1.70758E-11	1.708E-05
3973253768289	397325	3768289	0	0	0	0	0	0	1.22233E-05	0	0	0	0	9.9557E-10	9.9557E-10	0.0009956
3973753768289	397375	3768289	0	0	0	0	0	0	3.23571E-06	0	0	0	0	2.63543E-10	2.63543E-10	0.0002635
3974253768289	397425	3768289	0	0	0	0	0	0	1.42608E-06	0	0	0	0	1.16152E-10	1.16152E-10	0.0001162
3974753768289	397475	3768289	0	0	0	0	0	0	7.86182E-07	0	0	0	0	6.40332E-11	6.40332E-11	6.403E-05
3975253768289	397525	3768289	0	0	0	0	0	0	5.10114E-07	0	0	0	0	4.15479E-11	4.15479E-11	4.155E-05
3964253768339	396425	3768339	0	0	0	0	0	0	2.38691E-07	0	0	0	0	1.9441E-11	1.9441E-11	1.944E-05
3964753768339	396475	3768339	0	0	0	0	0	0	2.3691E-07	0	0	0	0	1.92959E-11	1.92959E-11	1.93E-05
3965253768339	396525	3768339	0	0	0	0	0	0	2.52547E-07	0	0	0	0	2.05695E-11	2.05695E-11	2.057E-05
3972753768339	397275	3768339	0	0	0	0	0	0	9.93064E-06	0	0	0	0	8.08834E-10	8.08834E-10	0.0008088
3973253768339	397325	3768339	0	0	0	0	0	0	7.32089E-06	0	0	0	0	5.96274E-10	5.96274E-10	0.0005963
3973753768339	397375	3768339	0	0	0	0	0	0	2.6966E-06	0	0	0	0	2.19633E-10	2.19633E-10	0.0002196
3974253768339	397425	3768339	0	0	0	0	0	0	1.41789E-06	0	0	0	0	1.15484E-10	1.15484E-10	0.0001155
3974753768339	397475	3768339	0	0	0	0	0	0	8.52659E-07	0	0	0	0	6.94477E-11	6.94477E-11	6.945E-05
3975253768339	397525	3768339	0	0	0	0	0	0	5.66484E-07	0	0	0	0	4.61391E-11	4.61391E-11	4.614E-05
3964253768389	396425	3768389	0	0	0	0	0	0	2.65247E-07	0	0	0	0	2.16039E-11	2.16039E-11	2.16E-05
3964753768389	396475	3768389	0	0	0	0	0	0	2.69992E-07	0	0	0	0	2.19904E-11	2.19904E-11	2.199E-05
3965253768389	396525	3768389	0	0	0	0	0	0	2.82988E-07	0	0	0	0	2.30489E-11	2.30489E-11	2.305E-05
3972253768389	397225	3768389	0	0	0	0	0	0	2.38731E-06	0	0	0	0	1.94442E-10	1.94442E-10	0.0001944
3972753768389	397275	3768389	0	0	0	0	0	0	9.45567E-06	0	0	0	0	7.70149E-10	7.70149E-10	0.0007701
3973253768389	397325	3768389	0	0	0	0	0	0	7.32333E-06	0	0	0	0	5.96473E-10	5.96473E-10	0.0005965
3973753768389	397375	3768389	0	0	0	0	0	0	2.59588E-06	0	0	0	0	2.1143E-10	2.1143E-10	0.0002114
3974253768389	397425	3768389	0	0	0	0	0	0	1.42028E-06	0	0	0	0	1.1568E-10	1.1568E-10	0.0001157
3974753768389	397475	3768389	0	0	0	0	0	0	8.98111E-07	0	0	0	0	7.31496E-11	7.31496E-11	7.315E-05
3975253768389	397525	3768389	0	0	0	0	0	0	6.16887E-07	0	0	0	0	5.02444E-11	5.02444E-11	5.024E-05
3964253768439	396425	3768439	0	0	0	0	0	0	3.01042E-07	0	0	0	0	2.45194E-11	2.45194E-11	2.452E-05
3964753768439	396475	3768439	0	0	0	0	0	0	3.10017E-07	0	0	0	0	2.52504E-11	2.52504E-11	2.525E-05
3965253768439	396525	3768439	0	0	0	0	0	0	3.21193E-07	0	0	0	0	2.61606E-11	2.61606E-11	2.616E-05
3971753768439	397175	3768439	0	0	0	0	0	0	1.28612E-06	0	0	0	0	1.04752E-10	1.04752E-10	0.0001048
3972253768439	397225	3768439	0	0	0	0	0	0	2.50443E-06	0	0	0	0	2.03981E-10	2.03981E-10	0.000204
3972753768439	397275	3768439	0	0	0	0	0	0	9.50244E-06	0	0	0	0	7.73958E-10	7.73958E-10	0.000774
3973253768439	397325	3768439	0	0	0	0	0	0	7.1501E-06	0	0	0	0	5.82364E-10	5.82364E-10	0.0005824
3973753768439	397375	3768439	0	0	0	0	0	0	2.39955E-06	0	0	0	0	1.95439E-10	1.95439E-10	0.0001954
3974253768439	397425	3768439	0	0	0	0	0	0	1.31306E-06	0	0	0	0	1.06947E-10	1.06947E-10	0.0001069
3974753768439	397475	3768439	0	0	0	0	0	0	9.29808E-07	0	0	0	0	7.57312E-11	7.57312E-11	7.573E-05
3975253768439	397525	3768439	0	0	0	0	0	0	6.52985E-07	0	0	0	0	5.31845E-11	5.31845E-11	5.318E-05
3964253768489	396425	3768489	0	0	0	0	0	0	3.43383E-07	0	0	0	0	2.7968E-11	2.7968E-11	2.797E-05
3964753768489	396475	3768489	0	0	0	0	0	0	3.58047E-07	0	0	0	0	2.91623E-11	2.91623E-11	2.916E-05
3965253768489	396525	3768489	0	0	0	0	0	0	3.7197E-07	0	0	0	0	3.02964E-11	3.02964E-11	3.03E-05
3970753768489	397075	3768489	0	0	0	0	0	0	7.32546E-07	0	0	0	0	5.96647E-11	5.96647E-11	5.966E-05
3971253768489	397125	3768489	0	0	0	0	0	0	9.30641E-07	0	0	0	0	7.57992E-11	7.57992E-11	7.58E-05
3971753768489	397175	3768489	0	0	0	0	0	0	1.34596E-06	0	0	0	0	1.09626E-10	1.09626E-10	0.0001096
3972253768489	397225	3768489	0	0	0	0	0	0	2.48988E-06	0	0	0	0	2.02796E-10	2.02796E-10	0.0002028
3972753768489	397275	3768489	0	0	0	0	0	0	9.32927E-06	0	0	0	0	7.59853E-10	7.59853E-10	0.0007599
3973253768489	397325	3768489	0	0	0	0	0	0	6.17087E-06	0	0	0	0	5.02607E-10	5.02607E-10	0.0005026
3973753768489	397375	3768489	0	0	0	0	0	0	2.36365E-06	0	0	0	0	1.92516E-10	1.92516E-10	0.0001925
3974253768489	397425	3768489	0	0	0	0	0	0	1.30462E-06	0	0	0	0	1.06259E-10	1.06259E-10	0.0001063
3974753768489	397475	3768489	0	0	0	0	0	0	8.13122E-07	0	0	0	0	6.62274E-11	6.62274E-11	6.623E-05
3975253768489	397525	3768489	0	0	0	0	0	0	5.89061E-07	0	0	0	0	4.7978E-11	4.7978E-11	4.798E-05
3964253768539	396425	3768539	0	0	0	0	0	0	3.99334E-07	0	0	0	0	3.2525E-11	3.2525E-11	3.253E-05
3964753768539	396475	3768539	0	0	0	0	0	0	4.21103E-07	0	0	0	0	3.42981E-11	3.42981E-11	3.43E-05
3965253768539	396525	3768539	0	0	0	0	0	0	4.3514E-07	0	0	0	0	3.54414E-11	3.54414E-11	3.544E-05
3965753768539	396575	3768539	0	0	0	0	0	0	4.18776E-07	0	0	0	0	3.41086E-11	3.41086E-11	3.411E-05
3970253768539	397025	3768539	0	0	0	0	0	0	6.92943E-07	0	0	0	0	5.6439E-11	5.6439E-11	5.644E-05
3970753768539	397075	3768539	0	0	0	0	0	0	8.10826E-07	0	0	0	0	6.60404E-11	6.60404E-11	6.604E-05
3971253768539	397125	3768539	0	0	0	0	0	0	1.0188E-06	0	0	0	0	8.29797E-11	8.29797E-11	8.298E-05
3971753768539	397175	3768539	0	0	0	0	0	0	1.45466E-06	0	0	0	0	1.1848E-10	1.1848E-10	0.0001185
3972253768539	397225	3768539	0	0	0	0	0	0	2.55131E-06	0	0	0	0	2.078E-10	2.078E-10	0.0002078
3972753768539	397275	3768539	0	0	0	0	0	0	8.49806E-06	0	0	0	0	6.92152E-10	6.92152E-10	0.0006922
3973253768539	397325	3768539	0	0	0	0	0	0	5.95109E-06	0	0	0	0	4.84706E-10	4.84706E-10	0.0004847
3973753768539	397375	3768539	0	0	0	0	0	0	2.38068E-06	0	0	0	0	1.93902E-10	1.93902E-10	0.0001939

Garvey Reservoir Rehab - Mitigated Facility Electrical System			Demolition - 2025	Demolition - 2026	Site Preparation - 2025	te Preparation - 202	Grading - 2025	Grading - 2026	Infrastructure - 2025	nfrastructure - 2026	Paving - 2025	rchitectural Coating - 202	Child Risk			
Unique Identifier	X (UTM)	Y (UTM)	1900	1900	2025	1900	2026	1900	2026	1900	2026	1900	3rd Trimester	0<2	Total	per million
3974253768539	397425	3768539	0	0	0	0	0	0	1.27506E-06	0	0	0	0	1.03851E-10	1.03851E-10	0.0001039
3974753768539	397475	3768539	0	0	0	0	0	0	8.22485E-07	0	0	0	0	6.699E-11	6.699E-11	6.699E-05
3975253768539	397525	3768539	0	0	0	0	0	0	5.85696E-07	0	0	0	0	4.7704E-11	4.7704E-11	4.77E-05
3964253768589	396425	3768589	0	0	0	0	0	0	4.66023E-07	0	0	0	0	3.79568E-11	3.79568E-11	3.796E-05
3964753768589	396475	3768589	0	0	0	0	0	0	5.05701E-07	0	0	0	0	4.11885E-11	4.11885E-11	4.119E-05
3965253768589	396525	3768589	0	0	0	0	0	0	5.03894E-07	0	0	0	0	4.10413E-11	4.10413E-11	4.104E-05
3965753768589	396575	3768589	0	0	0	0	0	0	4.86158E-07	0	0	0	0	3.95967E-11	3.95967E-11	3.96E-05
3966253768589	396625	3768589	0	0	0	0	0	0	4.80616E-07	0	0	0	0	3.91454E-11	3.91454E-11	3.915E-05
3968253768589	396825	3768589	0	0	0	0	0	0	5.92152E-07	0	0	0	0	4.82298E-11	4.82298E-11	4.823E-05
3968753768589	396875	3768589	0	0	0	0	0	0	6.27671E-07	0	0	0	0	5.11227E-11	5.11227E-11	5.112E-05
3969253768589	396925	3768589	0	0	0	0	0	0	6.81768E-07	0	0	0	0	5.55289E-11	5.55289E-11	5.553E-05
3969753768589	396975	3768589	0	0	0	0	0	0	7.31863E-07	0	0	0	0	5.9609E-11	5.9609E-11	5.961E-05
3970253768589	397025	3768589	0	0	0	0	0	0	8.05111E-07	0	0	0	0	6.55749E-11	6.55749E-11	6.557E-05
3970753768589	397075	3768589	0	0	0	0	0	0	9.14589E-07	0	0	0	0	7.44917E-11	7.44917E-11	7.449E-05
3971253768589	397125	3768589	0	0	0	0	0	0	1.14892E-06	0	0	0	0	9.35779E-11	9.35779E-11	9.358E-05
3971753768589	397175	3768589	0	0	0	0	0	0	1.62855E-06	0	0	0	0	1.32643E-10	1.32643E-10	0.0001326
3972253768589	397225	3768589	0	0	0	0	0	0	2.84832E-06	0	0	0	0	2.3199E-10	2.3199E-10	0.000232
3972753768589	397275	3768589	0	0	0	0	0	0	9.07695E-06	0	0	0	0	7.39302E-10	7.39302E-10	0.0007393
3973253768589	397325	3768589	0	0	0	0	0	0	5.91009E-06	0	0	0	0	4.81367E-10	4.81367E-10	0.0004814
3973753768589	397375	3768589	0	0	0	0	0	0	2.38013E-06	0	0	0	0	1.93858E-10	1.93858E-10	0.0001939
3974253768589	397425	3768589	0	0	0	0	0	0	1.23782E-06	0	0	0	0	1.00818E-10	1.00818E-10	0.0001008
3974753768589	397475	3768589	0	0	0	0	0	0	8.16547E-07	0	0	0	0	6.65064E-11	6.65064E-11	6.651E-05
3975253768589	397525	3768589	0	0	0	0	0	0	5.90625E-07	0	0	0	0	4.81054E-11	4.81054E-11	4.811E-05
3964253768639	396425	3768639	0	0	0	0	0	0	5.61717E-07	0	0	0	0	4.57509E-11	4.57509E-11	4.575E-05
3964753768639	396475	3768639	0	0	0	0	0	0	6.36065E-07	0	0	0	0	5.18064E-11	5.18064E-11	5.181E-05
3965253768639	396525	3768639	0	0	0	0	0	0	5.97717E-07	0	0	0	0	4.8683E-11	4.8683E-11	4.868E-05
3965753768639	396575	3768639	0	0	0	0	0	0	6.01335E-07	0	0	0	0	4.89777E-11	4.89777E-11	4.898E-05
3966253768639	396625	3768639	0	0	0	0	0	0	6.1207E-07	0	0	0	0	4.9852E-11	4.9852E-11	4.985E-05
3966753768639	396675	3768639	0	0	0	0	0	0	6.24843E-07	0	0	0	0	5.08924E-11	5.08924E-11	5.089E-05
3967253768639	396725	3768639	0	0	0	0	0	0	6.44125E-07	0	0	0	0	5.24629E-11	5.24629E-11	5.246E-05
3967753768639	396775	3768639	0	0	0	0	0	0	6.79063E-07	0	0	0	0	5.53085E-11	5.53085E-11	5.531E-05
3968253768639	396825	3768639	0	0	0	0	0	0	7.12615E-07	0	0	0	0	5.80413E-11	5.80413E-11	5.804E-05
3968753768639	396875	3768639	0	0	0	0	0	0	7.64108E-07	0	0	0	0	6.22353E-11	6.22353E-11	6.224E-05
3969253768639	396925	3768639	0	0	0	0	0	0	8.22071E-07	0	0	0	0	6.69563E-11	6.69563E-11	6.696E-05
3969753768639	396975	3768639	0	0	0	0	0	0	8.73162E-07	0	0	0	0	7.11176E-11	7.11176E-11	7.112E-05
3970253768639	397025	3768639	0	0	0	0	0	0	9.42057E-07	0	0	0	0	7.6729E-11	7.6729E-11	7.673E-05
3970753768639	397075	3768639	0	0	0	0	0	0	1.04547E-06	0	0	0	0	8.51515E-11	8.51515E-11	8.515E-05
3971253768639	397125	3768639	0	0	0	0	0	0	1.2571E-06	0	0	0	0	1.02389E-10	1.02389E-10	0.0001024
3971753768639	397175	3768639	0	0	0	0	0	0	1.8391E-06	0	0	0	0	1.49792E-10	1.49792E-10	0.0001498
3972253768639	397225	3768639	0	0	0	0	0	0	3.62446E-06	0	0	0	0	2.95206E-10	2.95206E-10	0.0002952
3972753768639	397275	3768639	0	0	0	0	0	0	1.26254E-05	0	0	0	0	1.02831E-09	1.02831E-09	0.0010283
3973253768639	397325	3768639	0	0	0	0	0	0	5.3237E-06	0	0	0	0	4.33606E-10	4.33606E-10	0.0004336
3973753768639	397375	3768639	0	0	0	0	0	0	2.34555E-06	0	0	0	0	1.91041E-10	1.91041E-10	0.000191
3974253768639	397425	3768639	0	0	0	0	0	0	1.36722E-06	0	0	0	0	1.11358E-10	1.11358E-10	0.0001114
3974753768639	397475	3768639	0	0	0	0	0	0	8.11605E-07	0	0	0	0	6.61039E-11	6.61039E-11	6.61E-05
3975253768639	397525	3768639	0	0	0	0	0	0	5.96383E-07	0	0	0	0	4.85744E-11	4.85744E-11	4.857E-05
3964253768689	396425	3768689	0	0	0	0	0	0	7.24038E-07	0	0	0	0	5.89717E-11	5.89717E-11	5.897E-05
3964753768689	396475	3768689	0	0	0	0	0	0	8.58881E-07	0	0	0	0	6.99544E-11	6.99544E-11	6.995E-05
3965253768689	396525	3768689	0	0	0	0	0	0	8.91452E-07	0	0	0	0	7.26072E-11	7.26072E-11	7.261E-05
3965753768689	396575	3768689	0	0	0	0	0	0	8.76162E-07	0	0	0	0	7.13619E-11	7.13619E-11	7.136E-05
3966253768689	396625	3768689	0	0	0	0	0	0	8.86462E-07	0	0	0	0	7.22008E-11	7.22008E-11	7.22E-05
3966753768689	396675	3768689	0	0	0	0	0	0	8.80542E-07	0	0	0	0	7.17187E-11	7.17187E-11	7.172E-05
3967253768689	396725	3768689	0	0	0	0	0	0	8.95219E-07	0	0	0	0	7.29141E-11	7.29141E-11	7.291E-05
3967753768689	396775	3768689	0	0	0	0	0	0	9.08079E-07	0	0	0	0	7.39615E-11	7.39615E-11	7.396E-05
3968253768689	396825	3768689	0	0	0	0	0	0	9.5723E-07	0	0	0	0	7.79647E-11	7.79647E-11	7.796E-05
3968753768689	396875	3768689	0	0	0	0	0	0	1.00822E-06	0	0	0	0	8.2118E-11	8.2118E-11	8.212E-05
3969253768689	396925	3768689	0	0	0	0	0	0	1.05176E-06	0	0	0	0	8.5664E-11	8.5664E-11	8.566E-05
3969753768689	396975	3768689	0	0	0	0	0	0	1.09665E-06	0	0	0	0	8.93203E-11	8.93203E-11	8.932E-05
3970253768689	397025	3768689	0	0	0	0	0	0	1.15927E-06	0	0	0	0	9.44209E-11	9.44209E-11	9.442E-05
3970753768689	397075	3768689	0	0	0	0	0	0	1.27162E-06	0	0	0	0	1.03572E-10	1.03572E-10	0.0001036
3971253768689	397125	3768689	0	0	0	0	0	0	1.48498E-06	0	0	0	0	1.20949E-10	1.20949E-10	0.0001209
3971753768689	397175	3768689	0	0	0	0	0	0	2.07075E-06	0	0	0	0	1.68659E-10	1.68659E-10	0.0001687
3972253768689	397225	3768689	0	0	0	0	0	0	4.69595E-06	0	0	0	0	3.82477E-10	3.82477E-10	0.0003825
3972753768689	397275	3768689	0	0	0	0	0	0	1.28985E-05	0	0	0	0	1.05056E-09	1.05056E-09	0.0010506
3973253768689	397325	3768689	0	0	0	0	0	0	4.31696E-06	0	0	0	0	3.51609E-10	3.51609E-10	0.0003516
3973753768689	397375	3768689	0	0	0	0	0	0	2.18547E-06	0	0	0	0	1.78003E-10	1.78003E-10	0.000178
3974253768689	397425	3768689	0	0	0	0	0	0	1.36516E-06	0	0	0	0	1.1119E-10	1.1119E-10	0.0001112
3974753768689	397475	3768689	0	0	0	0	0	0	9.31649E-07	0	0	0	0	7.58813E-11	7.58813E-11	7.588E-05
3975253768689	397525	3768689	0	0	0	0	0	0	6.76177E-07	0	0	0	0	5.50735E-11	5.50735E-11	5.507E-05

Garvey Reservoir Rehab - Mitigated Facility Electrical System

Maximum Individual Non-Cancer Impact Calculations - Sensitive Receptors (Maximum Impacted Senior Residential Receptor) (IMPACT AT ALL OTHER LOCATIONS ON THE PROJECT SITE WOULD BE LESS THAN SHOWN)

Maximum Non-cancer Chronic Hazards / Toxicological Endpoints*

Receptor Group	Pollutant	CREL[1]	CONC	WFrac	$CONC_{WF}$	HI		ALIM	BN	CVS	DEV	ENDC	EYE	HEM	IMMUN	KIDN	NS	REPRO	RESP	SK
Project:																				
MEI - Max	DPM	5.00E+00	2.06E-02	1.00E+00	2.06E-02	0.004		-	-	-	-	-	-	-	-	-	-	-	4.13E-03	-
							Total Risk				-			-				-	0.004	
							Threshold				1.00			1.00				1.00	1.00	
							Over?				NO			NO				NO	NO	

Notes:

1. California Air Resources Board, "Consolidated Table of OEHHA/ARB Approved Risk Assessment Health Values," "OEHHA/ARB Approved Chronic Reference Exposure Levels and Target Organs," "OEHHA/ARB Approved Acute Reference Exposure Levels and Target Organs," and "OEHHA/ARB Approved 8-Hour Reference Exposure Levels and Target Organs," http://www.arb.ca.gov/toxics/healthval/healthval.htm. Tables last updated: May 8, 2018. Downloaded: 08/14/18.

Source: ESA, 2020

Where:

$CONC_{WF}$	Pollutant Concentration ($\mu g/m^3$) multiplied by the weight fraction
CREL	Chronic Reference Exposure Level
HI	Hazard Index
MEI	Maximally Exposed Individual
WFrac	Weight fraction of speciated component

* Key to Toxicological Endpoints

ALIM	Alimentary Tract	EYE	Eye	NS	Nervous System
BN	Bone	HEM	Hematologic System	REPRO	Reproductive System
CVS	Cardiovascular System	IMMUN	Immune System	RESP	Respiratory System
DEV	Developmental System	KIDN	Kidney	SK	Skin
ENDC	Endocrine System				

Standby Generator

Garvey Reservoir Rehab - Unmitigated Standby Generator

Cancer Risk Summary & Maximum Annual GLC for Chronic Calculations

Cancer Risk Summary

Max Risk: 16.96139

XY	X	Y	Offroad Risk	Haul Risk	Total Risk
7449041451	574490	4145130	0.042547699	5.32037E-06	0.042553
7448041451	574480	4145140	0.047150036	5.44099E-06	0.047155
7449041451	574490	4145140	0.054069484	5.66228E-06	0.054075
7449041451	574490	4145150	0.061318431	5.80981E-06	0.061324
7450041451	574500	4145150	0.070321154	6.36914E-06	0.070328
7446041451	574460	4145160	0.078197208	6.02167E-06	0.078203
7449041451	574490	4145160	0.085052883	5.99805E-06	0.085059
7450041451	574500	4145160	0.09238686	6.00331E-06	0.092393
7451041451	574510	4145160	0.101389584	6.08274E-06	0.101396
7446041451	574460	4145170	0.107203621	5.92935E-06	0.10721
7447041451	574470	4145170	0.10863853	5.84824E-06	0.108644
7448041451	574480	4145170	0.106661545	5.85529E-06	0.106667
7449041451	574490	4145170	0.106448965	5.58838E-06	0.106455
7450041451	574500	4145170	0.103940533	5.03099E-06	0.103946
7451041451	574510	4145170	0.097956432	4.94864E-06	0.097961
7452041451	574520	4145170	0.090537423	4.80339E-06	0.090542
7446041451	574460	4145180	0.080567465	4.95727E-06	0.080572
7447041451	574470	4145180	0.072074931	4.72182E-06	0.07208
7448041451	574480	4145180	0.044971101	6.12254E-06	0.044977
7449041451	574490	4145180	0.049669098	5.98237E-06	0.049675
7450041451	574500	4145180	0.057949052	6.3026E-06	0.057955
7451041451	574510	4145180	0.067153726	6.90293E-06	0.067161
7452041451	574520	4145180	0.077697647	6.99673E-06	0.077705
7453041451	574530	4145180	0.08883679	6.79357E-06	0.088844
7445041451	574450	4145190	0.100677444	6.84671E-06	0.100684
7446041451	574460	4145190	0.113294011	6.88669E-06	0.113301
7447041451	574470	4145190	0.128280835	6.98921E-06	0.128288
7448041451	574480	4145190	0.139738847	6.85489E-06	0.139746
7449041451	574490	4145190	0.144638794	6.639E-06	0.144645
7450041451	574500	4145190	0.143427093	6.66093E-06	0.143434
7451041451	574510	4145190	0.140759226	6.46056E-06	0.140766
7452041451	574520	4145190	0.136592676	5.82715E-06	0.136599
7444041452	574440	4145200	0.126729008	5.52622E-06	0.126735
7445041452	574450	4145200	0.114027409	5.40502E-06	0.114033
7446041452	574460	4145200	0.100496752	5.27665E-06	0.100502
7447041452	574470	4145200	0.087614461	5.07826E-06	0.08762
7448041452	574480	4145200	0.046469783	6.45395E-06	0.046476
7449041452	574490	4145200	0.052336965	6.63459E-06	0.052344
7450041452	574500	4145200	0.060797612	6.9389E-06	0.060805
7451041452	574510	4145200	0.071809207	7.36805E-06	0.071817
7443041452	574430	4145210	0.085594959	8.18465E-06	0.085603
7444041452	574440	4145210	0.102197384	8.31064E-06	0.102206
7445041452	574450	4145210	0.117226724	7.83671E-06	0.117235
7446041452	574460	4145210	0.14062105	8.0343E-06	0.140629
7447041452	574470	4145210	0.164631855	8.14418E-06	0.16464
7448041452	574480	4145210	0.186591272	8.14614E-06	0.186599
7449041452	574490	4145210	0.201556838	7.84557E-06	0.201565
7450041452	574500	4145210	0.203852692	7.74156E-06	0.20386
7451041452	574510	4145210	0.198144944	7.54862E-06	0.198152
7443041452	574430	4145220	0.189705555	6.72425E-06	0.189712
7444041452	574440	4145220	0.170711616	6.3426E-06	0.170718
7445041452	574450	4145220	0.148358928	5.99762E-06	0.148365
7446041452	574460	4145220	0.125942465	5.76963E-06	0.125948
7447041452	574470	4145220	0.106034436	5.48474E-06	0.10604
7448041452	574480	4145220	0.048266076	7.81431E-06	0.048274
7449041452	574490	4145220	0.054834769	7.39348E-06	0.054842
7450041452	574500	4145220	0.064400827	7.87843E-06	0.064409
7451041452	574510	4145220	0.077155571	9.31872E-06	0.077165
7452041452	574520	4145220	0.092886421	9.40324E-06	0.092896
7453041452	574530	4145220	0.110434823	8.80852E-06	0.110444
7444041452	574440	4145230	0.137825635	9.16993E-06	0.137835
7445041452	574450	4145230	0.176334332	9.68522E-06	0.176344

Max GLC for Chronic Calcs

Max GLC: 0.299581

XY	X	Y	2025	2026	2027	2034	2035
57449041451	574490	4145130	0.000116	0.0007516	0		
57448041451	574480	4145140	0.0001286	0.0008328	0		
57449041451	574490	4145140	0.0001474	0.0009551	0		
57449041451	574490	4145150	0.0001672	0.0010831	0		
57450041451	574500	4145150	0.0001917	0.0012421	0		
57446041451	574460	4145160	0.0002132	0.0013812	0		
57449041451	574490	4145160	0.0002319	0.0015023	0		
57450041451	574500	4145160	0.0002519	0.0016319	0		
57451041451	574510	4145160	0.0002764	0.0017909	0		
57446041451	574460	4145170	0.0002923	0.0018936	0		
57447041451	574470	4145170	0.0002962	0.0019189	0		
57448041451	574480	4145170	0.0002908	0.001884	0		
57449041451	574490	4145170	0.0002902	0.0018802	0		
57450041451	574500	4145170	0.0002834	0.0018359	0		
57451041451	574510	4145170	0.0002671	0.0017302	0		
57452041451	574520	4145170	0.0002468	0.0015992	0		
57446041451	574460	4145180	0.0002197	0.0014231	0		
57447041451	574470	4145180	0.0001965	0.0012731	0		
57448041451	574480	4145180	0.0001226	0.0007944	0		
57449041451	574490	4145180	0.0001354	0.0008773	0		
57450041451	574500	4145180	0.000158	0.0010236	0		
57451041451	574510	4145180	0.0001831	0.0011862	0		
57452041451	574520	4145180	0.0002118	0.0013724	0		
57453041451	574530	4145180	0.0002422	0.0015692	0		
57445041451	574450	4145190	0.0002745	0.0017783	0		
57446041451	574460	4145190	0.0003089	0.0020011	0		
57447041451	574470	4145190	0.0003498	0.0022658	0		
57448041451	574480	4145190	0.000381	0.0024682	0		
57449041451	574490	4145190	0.0003944	0.0025548	0		
57450041451	574500	4145190	0.000391	0.0025334	0		
57451041451	574510	4145190	0.0003838	0.0024862	0		
57452041451	574520	4145190	0.0003724	0.0024126	0		
57444041452	574440	4145200	0.0003455	0.0022384	0		
57445041452	574450	4145200	0.0003109	0.0020141	0		
57446041452	574460	4145200	0.000274	0.0017751	0		
57447041452	574470	4145200	0.0002389	0.0015476	0		
57448041452	574480	4145200	0.0001267	0.0008208	0		
57449041452	574490	4145200	0.0001427	0.0009245	0		
57450041452	574500	4145200	0.0001658	0.0010739	0		
57451041452	574510	4145200	0.0001958	0.0012684	0		
57443041452	574430	4145210	0.0002334	0.0015119	0		
57444041452	574440	4145210	0.0002786	0.0018052	0		
57445041452	574450	4145210	0.0003196	0.0020706	0		
57446041452	574460	4145210	0.0003834	0.0024838	0		
57447041452	574470	4145210	0.0004489	0.0029079	0		
57448041452	574480	4145210	0.0005087	0.0032958	0		
57449041452	574490	4145210	0.0005495	0.0035601	0		
57450041452	574500	4145210	0.0005558	0.0036007	0		
57451041452	574510	4145210	0.0005402	0.0034998	0		
57443041452	574430	4145220	0.0005172	0.0033508	0		
57444041452	574440	4145220	0.0004654	0.0030153	0		
57445041452	574450	4145220	0.0004045	0.0026205	0		
57446041452	574460	4145220	0.0003434	0.0022245	0		
57447041452	574470	4145220	0.0002891	0.0018729	0		
57448041452	574480	4145220	0.0001316	0.0008526	0		
57449041452	574490	4145220	0.0001495	0.0009686	0		
57450041452	574500	4145220	0.0001756	0.0011376	0		
57451041452	574510	4145220	0.0002104	0.0013629	0		
57452041452	574520	4145220	0.0002533	0.0016407	0		
57453041452	574530	4145220	0.0003011	0.0019507	0		
57444041452	574440	4145230	0.0003758	0.0024345	0		
57445041452	574450	4145230	0.0004808	0.0031146	0		

Garvey Reservoir Rehab - Unmitigated Standby Generator

Cancer Risk Summary & Maximum Annual GLC for Chronic Calculations

Cancer Risk Summary

Max Risk: 16.96139

XY	X	Y	Offroad Risk	Haul Risk	Total Risk
7446041452	574460	4145230	0.221932541	9.79065E-06	0.221942
7447041452	574470	4145230	0.264203888	9.76118E-06	0.264214
7448041452	574480	4145230	0.299024338	9.54526E-06	0.299034
7449041452	574490	4145230	0.318624128	8.75346E-06	0.318633
7450041452	574500	4145230	0.305741836	8.90411E-06	0.305751
7451041452	574510	4145230	0.283665501	7.65802E-06	0.283673
7452041452	574520	4145230	0.242414534	7.34737E-06	0.242422
7444041452	574440	4145240	0.198601989	6.9193E-06	0.198609
7445041452	574450	4145240	0.159838197	6.45907E-06	0.159845
7446041452	574460	4145240	0.128280835	6.14675E-06	0.128287
7447041452	574470	4145240	0.049456519	8.77009E-06	0.049465
7448041452	574480	4145240	0.057502636	9.96282E-06	0.057513
7449041452	574490	4145240	0.067387563	9.69632E-06	0.067397
7450041452	574500	4145240	0.080854446	1.02367E-05	0.080865
7451041452	574510	4145240	0.097478129	9.69203E-06	0.097488
7445041452	574450	4145250	0.121478305	1.01931E-05	0.121488
7446041452	574460	4145250	0.159901971	1.11726E-05	0.159913
7447041452	574470	4145250	0.215587056	1.19314E-05	0.215599
7448041452	574480	4145250	0.292391871	1.17851E-05	0.292404
7446041452	574460	4145260	0.388477607	1.18012E-05	0.388489
7447041452	574470	4145260	0.484584601	1.18174E-05	0.484596
7448041452	574480	4145260	0.55303506	1.09949E-05	0.553046
7447041452	574470	4145270	0.538473394	1.07817E-05	0.538484
7449041451	574490	4145130	0.467631421	9.30424E-06	0.467641
7448041451	574480	4145140	0.365253345	8.58269E-06	0.365262
7449041451	574490	4145140	0.273142837	8.16797E-06	0.273151
7449041451	574490	4145150	0.204267221	7.2929E-06	0.204275
7450041451	574500	4145150	0.155618503	6.64889E-06	0.155625
7446041451	574460	4145160	0.050200546	9.69254E-06	0.05021
7449041451	574490	4145160	0.058650563	1.11951E-05	0.058662
7450041451	574500	4145160	0.069481467	1.18341E-05	0.069493
7451041451	574510	4145160	0.083384137	1.12293E-05	0.083395
7446041451	574460	4145170	0.102091095	1.11141E-05	0.102102
7447041451	574470	4145170	0.887390038	1.30304E-05	0.887403
7448041451	574480	4145170	0.564609989	1.02634E-05	0.56462
7449041451	574490	4145170	0.345887392	8.65174E-06	0.345896
7450041451	574500	4145170	0.238917608	7.65824E-06	0.238925
7451041451	574510	4145170	0.184922526	7.67094E-06	0.18493
7452041451	574520	4145170	0.050200546	1.01594E-05	0.050211
7446041451	574460	4145180	0.058969432	1.17402E-05	0.058981
7447041451	574470	4145180	0.070129833	1.26983E-05	0.070143
7448041451	574480	4145180	0.084308856	1.22006E-05	0.084321
7449041451	574490	4145180	1.743180198	1.53677E-05	1.743196
7450041451	574500	4145180	0.800317654	1.24104E-05	0.80033
7451041451	574510	4145180	0.439060795	1.03011E-05	0.439071
7452041451	574520	4145180	0.316742803	1.03765E-05	0.316753
7453041451	574530	4145180	0.210687109	9.48914E-06	0.210697
7445041451	574450	4145190	0.050636333	1.36958E-05	0.05065
7446041451	574460	4145190	0.058693079	1.29799E-05	0.058706
7447041451	574470	4145190	0.069810964	1.40854E-05	0.069825
7448041451	574480	4145190	0.084999738	1.52479E-05	0.085015
7449041451	574490	4145190	4.385697376	2.66687E-05	4.385724
7450041451	574500	4145190	1.423610093	2.10752E-05	1.423631
7451041451	574510	4145190	0.660440631	1.58116E-05	0.660456
7452041451	574520	4145190	0.378582052	1.23456E-05	0.378594
7444041452	574440	4145200	0.242510194	1.07008E-05	0.242521
7445041452	574450	4145200	0.050189917	1.65178E-05	0.050206
7446041452	574460	4145200	0.058374211	1.70603E-05	0.058391
7447041452	574470	4145200	0.06934329	1.85721E-05	0.069362
7448041452	574480	4145200	0.083798666	1.82872E-05	0.083817
7449041452	574490	4145200	5.7727545	5.83239E-05	5.772813
7450041452	574500	4145200	1.777607377	3.05951E-05	1.777638

Max GLC for Chronic Calcs

Max GLC: 0.299581

XY	X	Y	2025	2026	2027	2034	2035
57446041452	574460	4145230	0.0006051	0.00392	0		
57447041452	574470	4145230	0.0007203	0.0046666	0		
57448041452	574480	4145230	0.0008153	0.0052817	0		
57449041452	574490	4145230	0.0008687	0.0056278	0		
57450041452	574500	4145230	0.0008336	0.0054003	0		
57451041452	574510	4145230	0.0007734	0.0050104	0		
57452041452	574520	4145230	0.0006609	0.0042818	0		
57444041452	574440	4145240	0.0005415	0.0035079	0		
57445041452	574450	4145240	0.0004358	0.0028232	0		
57446041452	574460	4145240	0.0003498	0.0022658	0		
57447041452	574470	4145240	0.0001348	0.0008736	0		
57448041452	574480	4145240	0.0001568	0.0010157	0		
57449041452	574490	4145240	0.0001837	0.0011903	0		
57450041452	574500	4145240	0.0002204	0.0014282	0		
57451041452	574510	4145240	0.0002658	0.0017218	0		
57445041452	574450	4145250	0.0003312	0.0021457	0		
57446041452	574460	4145250	0.000436	0.0028244	0		
57447041452	574470	4145250	0.0005878	0.003808	0		
57448041452	574480	4145250	0.0007972	0.0051645	0		
57446041452	574460	4145260	0.0010592	0.0068617	0		
57447041452	574470	4145260	0.0013212	0.0085592	0		
57448041452	574480	4145260	0.0015078	0.0097682	0		
57447041452	574470	4145270	0.0014681	0.009511	0		
57449041451	574490	4145130	0.001275	0.0082597	0		
57448041451	574480	4145140	0.0009958	0.0064514	0		
57449041451	574490	4145140	0.0007447	0.0048245	0		
57449041451	574490	4145150	0.0005569	0.003608	0		
57450041451	574500	4145150	0.0004243	0.0027487	0		
57446041451	574460	4145160	0.0001369	0.0008868	0		
57449041451	574490	4145160	0.0001599	0.001036	0		
57450041451	574500	4145160	0.0001894	0.0012273	0		
57451041451	574510	4145160	0.0002273	0.0014729	0		
57446041451	574460	4145170	0.0002783	0.0018033	0		
57447041451	574470	4145170	0.0024194	0.0156738	0		
57448041451	574480	4145170	0.0015394	0.0099726	0		
57449041451	574490	4145170	0.000943	0.0061094	0		
57450041451	574500	4145170	0.0006514	0.00422	0		
57451041451	574510	4145170	0.0005042	0.0032663	0		
57452041451	574520	4145170	0.0001369	0.0008868	0		
57446041451	574460	4145180	0.0001608	0.0010417	0		
57447041451	574470	4145180	0.0001912	0.0012388	0		
57448041451	574480	4145180	0.0002299	0.0014892	0		
57449041451	574490	4145180	0.0047527	0.0307894	0		
57450041451	574500	4145180	0.002182	0.0141359	0		
57451041451	574510	4145180	0.0011971	0.0077551	0		
57452041451	574520	4145180	0.0008636	0.0055946	0		
57453041451	574530	4145180	0.0005744	0.0037214	0		
57445041451	574450	4145190	0.0001381	0.0008945	0		
57446041451	574460	4145190	0.00016	0.0010368	0		
57447041451	574470	4145190	0.0001903	0.0012332	0		
57448041451	574480	4145190	0.0002317	0.0015015	0		
57449041451	574490	4145190	0.0119574	0.0774634	0		
57450041451	574500	4145190	0.0038814	0.025145	0		
57451041451	574510	4145190	0.0018007	0.0116653	0		
57452041451	574520	4145190	0.0010322	0.0066869	0		
57444041452	574440	4145200	0.0006612	0.0042835	0		
57445041452	574450	4145200	0.0001368	0.0008866	0		
57446041452	574460	4145200	0.0001592	0.0010312	0		
57447041452	574470	4145200	0.0001891	0.001225	0		
57448041452	574480	4145200	0.0002285	0.0014803	0		
57449041452	574490	4145200	0.0157392	0.1019629	0		
57450041452	574500	4145200	0.0048466	0.0313976	0		

Garvey Reservoir Rehab - Unmitigated Standby Generator

Cancer Risk Summary & Maximum Annual GLC for Chronic Calculations

Cancer Risk Summary

Max Risk: 16.96139

XY	X	Y	Offroad Risk	Haul Risk	Total Risk
7451041452(	574510	4145200	0.788976561	2.08786E-05	0.788997
7443041452:	574430	4145210	0.443960743	1.53963E-05	0.443976
7444041452:	574440	4145210	0.271527236	1.26333E-05	0.27154
7445041452:	574450	4145210	0.048850669	1.9645E-05	0.04887
7446041452:	574460	4145210	0.056928673	1.93322E-05	0.056948
7447041452:	574470	4145210	0.067387563	2.17015E-05	0.067409
7448041452:	574480	4145210	0.081183944	2.2457E-05	0.081206
7449041452:	574490	4145210	4.654663035	0.000463544	4.655127
7450041452:	574500	4145210	3.248771406	9.09939E-05	3.248862
7451041452:	574510	4145210	1.645744585	4.15415E-05	1.645786
7443041452:	574430	4145220	0.826921923	2.60293E-05	0.826948
7444041452:	574440	4145220	0.473721811	1.86458E-05	0.47374
7445041452:	574450	4145220	0.307006682	1.43544E-05	0.307021
7446041452:	574460	4145220	0.044864811	2.31519E-05	0.044888
7447041452:	574470	4145220	0.055164267	2.41071E-05	0.055188
7448041452:	574480	4145220	0.064794098	2.69155E-05	0.064821
7449041452:	574490	4145220	0.077527584	2.90386E-05	0.077557
7450041452:	574500	4145220	1.326790959	0.000727709	1.327519
7451041452:	574510	4145220	1.852243886	0.000327301	1.852571
7452041452:	574520	4145220	1.730882499	0.000105613	1.730988
7453041452:	574530	4145220	1.213741414	5.07024E-05	1.213792
7444041452:	574440	4145230	0.768090668	3.07328E-05	0.768121
7445041452:	574450	4145230	0.48601951	2.16056E-05	0.486041
7446041452:	574460	4145230	0.329168049	1.55417E-05	0.329184
7447041452:	574470	4145230	0.0429516	2.84043E-05	0.04298
7448041452:	574480	4145230	0.052708978	3.0611E-05	0.05274
7449041452:	574490	4145230	0.061095223	3.39295E-05	0.061129
7450041452:	574500	4145230	0.072903989	3.79932E-05	0.072942
7451041452:	574510	4145230	0.509265031	0.000135252	0.5094
7452041452:	574520	4145230	0.758609642	0.000738665	0.759348
7444041452(	574440	4145240	0.973622734	0.000299267	0.973922
7445041452(	574450	4145240	0.981041744	9.73288E-05	0.981139
7446041452(	574460	4145240	0.818801403	5.81784E-05	0.81886
7447041452(	574470	4145240	0.600992896	3.61013E-05	0.601029
7448041452(	574480	4145240	0.436998778	2.28398E-05	0.437022
7449041452(	574490	4145240	0.312182982	1.78051E-05	0.312201
7450041452(	574500	4145240	0.043929463	3.61431E-05	0.043966
7451041452(	574510	4145240	0.046129657	4.07422E-05	0.04617
7445041452!	574450	4145250	0.053208539	4.39556E-05	0.053252
7446041452!	574460	4145250	0.067855237	5.27821E-05	0.067908
7447041452!	574470	4145250	0.079972243	5.16924E-05	0.080024
7448041452!	574480	4145250	0.153450196	6.61509E-05	0.153516
7446041452(	574460	4145260	0.199803061	7.68101E-05	0.19988
7447041452(	574470	4145260	0.264958543	9.49292E-05	0.265053
7448041452(	574480	4145260	0.361267487	0.000162533	0.36143
7447041452:	574470	4145270	0.481682897	0.000716559	0.482399
7449041451:	574490	4145130	0.592872376	0.000300137	0.593173
7448041451(	574480	4145140	0.607136431	9.61706E-05	0.607233
7449041451(	574490	4145140	0.566810183	5.75679E-05	0.566868
7449041451!	574490	4145150	0.464591541	3.82717E-05	0.46463
7450041451!	574500	4145150	0.358142575	2.72354E-05	0.35817
7446041451(	574460	4145160	0.275523723	1.98857E-05	0.275544
7449041451(	574490	4145160	0.041718641	6.34945E-05	0.041782
7450041451(	574500	4145160	0.047362615	7.2491E-05	0.047435
7451041451(	574510	4145160	0.050774509	7.03895E-05	0.050845
7446041451:	574460	4145170	0.062625792	8.64161E-05	0.062712
7447041451:	574470	4145170	0.07340355	8.7359E-05	0.073491
7448041451:	574480	4145170	0.087284963	8.91894E-05	0.087374
7449041451:	574490	4145170	0.105407328	9.2555E-05	0.1055
7450041451:	574500	4145170	0.130013355	0.00010279	0.130116
7451041451:	574510	4145170	0.163069399	0.000112515	0.163182
7452041451:	574520	4145170	0.207540939	0.000130516	0.207671

Max GLC for Chronic Calcs

Max GLC: 0.299581

XY	X	Y	2025	2026	2027	2034	2035
57451041452(	574510	4145200	0.0021511	0.0139356	0		
57443041452:	574430	4145210	0.0012104	0.0078417	0		
57444041452:	574440	4145210	0.0007403	0.004796	0		
57445041452:	574450	4145210	0.0001332	0.000863	0		
57446041452:	574460	4145210	0.0001552	0.0010057	0		
57447041452:	574470	4145210	0.0001837	0.0011904	0		
57448041452:	574480	4145210	0.0002213	0.0014341	0		
57449041452:	574490	4145210	0.0126907	0.0822181	0		
57450041452:	574500	4145210	0.0088576	0.0573829	0		
57451041452:	574510	4145210	0.004487	0.0290686	0		
57443041452:	574430	4145220	0.0022546	0.0146059	0		
57444041452:	574440	4145220	0.0012916	0.0083674	0		
57445041452:	574450	4145220	0.000837	0.0054227	0		
57446041452:	574460	4145220	0.0001223	0.0007926	0		
57447041452:	574470	4145220	0.0001504	0.0009746	0		
57448041452:	574480	4145220	0.0001767	0.0011447	0		
57449041452:	574490	4145220	0.0002114	0.0013696	0		
57450041452:	574500	4145220	0.0036174	0.0234413	0		
57451041452:	574510	4145220	0.0050501	0.0327186	0		
57452041452:	574520	4145220	0.0047192	0.030573	0		
57453041452:	574530	4145220	0.0033092	0.0214384	0		
57444041452:	574440	4145230	0.0020942	0.0135668	0		
57445041452:	574450	4145230	0.0013251	0.0085846	0		
57446041452:	574460	4145230	0.0008975	0.0058141	0		
57447041452:	574470	4145230	0.0001171	0.0007589	0		
57448041452:	574480	4145230	0.0001437	0.0009313	0		
57449041452:	574490	4145230	0.0001666	0.0010794	0		
57450041452:	574500	4145230	0.0001988	0.001288	0		
57451041452:	574510	4145230	0.0013885	0.0089962	0		
57452041452:	574520	4145230	0.0020683	0.0134058	0		
57444041452(	574440	4145240	0.0026545	0.0171995	0		
57445041452(	574450	4145240	0.0026748	0.0173287	0		
57446041452(	574460	4145240	0.0022324	0.0144628	0		
57447041452(	574470	4145240	0.0016386	0.0106155	0		
57448041452(	574480	4145240	0.0011915	0.0077188	0		
57449041452(	574490	4145240	0.0008512	0.0055142	0		
57450041452(	574500	4145240	0.0001198	0.0007762	0		
57451041452(	574510	4145240	0.0001258	0.0008151	0		
57445041452!	574450	4145250	0.0001451	0.0009402	0		
57446041452!	574460	4145250	0.000185	0.001199	0		
57447041452!	574470	4145250	0.000218	0.001413	0		
57448041452!	574480	4145250	0.0004184	0.0027109	0		
57446041452(	574460	4145260	0.0005448	0.0035298	0		
57447041452(	574470	4145260	0.0007224	0.0046807	0		
57448041452(	574480	4145260	0.000985	0.0063824	0		
57447041452:	574470	4145270	0.0013133	0.0085143	0		
57449041451:	574490	4145130	0.0016164	0.0104744	0		
57448041451(	574480	4145140	0.0016553	0.0107245	0		
57449041451(	574490	4145140	0.0015454	0.0100119	0		
57449041451!	574490	4145150	0.0012667	0.0082063	0		
57450041451!	574500	4145150	0.0009765	0.006326	0		
57446041451(	574460	4145160	0.0007512	0.0048667	0		
57449041451(	574490	4145160	0.0001137	0.0007374	0		
57450041451(	574500	4145160	0.0001291	0.0008372	0		
57451041451(	574510	4145160	0.0001384	0.0008975	0		
57446041451:	574460	4145170	0.0001707	0.0011069	0		
57447041451:	574470	4145170	0.0002001	0.0012973	0		
57448041451:	574480	4145170	0.000238	0.0015425	0		
57449041451:	574490	4145170	0.0002874	0.0018626	0		
57450041451:	574500	4145170	0.0003545	0.0022973	0		
57451041451:	574510	4145170	0.0004446	0.0028813	0		
57452041451:	574520	4145170	0.0005659	0.0036669	0		

Garvey Reservoir Rehab - Unmitigated Standby Generator

Cancer Risk Summary & Maximum Annual GLC for Chronic Calculations

Cancer Risk Summary

Max Risk: 16.96139

XY	X	Y	Offroad Risk	Haul Risk	Total Risk
7446041451	574460	4145180	0.263714956	0.000204847	0.26392
7447041451	574470	4145180	0.39728901	0.000272403	0.397561
7448041451	574480	4145180	0.424647935	0.000109752	0.424758
7449041451	574490	4145180	0.406100412	5.98514E-05	0.40616
7450041451	574500	4145180	0.35596364	3.92137E-05	0.356003
7451041451	574510	4145180	0.293125269	2.89234E-05	0.293154
7452041451	574520	4145180	0.237418926	2.12381E-05	0.23744
7453041451	574530	4145180	0.039667253	0.00018437	0.039852
7445041451	574450	4145190	0.04447154	0.000229093	0.044701
7446041451	574460	4145190	0.048404252	0.000167951	0.048572
7447041451	574470	4145190	0.057725844	0.000219464	0.057945
7448041451	574480	4145190	0.066462844	0.000235017	0.066698
7449041451	574490	4145190	0.077740163	0.000234935	0.077975
7450041451	574500	4145190	0.092376232	0.000243028	0.092619
7451041451	574510	4145190	0.111253252	0.00025267	0.111506
7452041451	574520	4145190	0.135104623	0.000258901	0.135364
7444041452	574440	4145200	0.165173931	0.000278917	0.165453
7445041452	574450	4145200	0.200791553	0.000335885	0.201127
7446041452	574460	4145200	0.244168311	0.001071309	0.24524
7447041452	574470	4145200	0.281794805	0.000372233	0.282167
7448041452	574480	4145200	0.30143711	0.000130922	0.301568
7449041452	574490	4145200	0.297291819	7.02172E-05	0.297362
7450041452	574500	4145200	0.272600761	4.41609E-05	0.272645
7451041452	574510	4145200	0.236717415	3.02331E-05	0.236748
7443041452	574430	4145210	0.200610861	2.20077E-05	0.200633
7444041452	574440	4145210	0.037296996	0.000742292	0.038039
7445041452	574450	4145210	0.041761157	0.000955991	0.042717
7446041452	574460	4145210	0.046714249	0.000936107	0.04765
7447041452	574470	4145210	0.053229797	0.001031193	0.054261
7448041452	574480	4145210	0.060701951	0.000972558	0.061675
7449041452	574490	4145210	0.069779077	0.001056627	0.070836
7450041452	574500	4145210	0.081651618	0.001022655	0.082674
7451041452	574510	4145210	0.097424984	0.000993405	0.098418
7443041452	574430	4145220	0.115100933	0.000955241	0.116056
7444041452	574440	4145220	0.135062107	0.000965725	0.136028
7445041452	574450	4145220	0.15899851	0.000992569	0.159991
7446041452	574460	4145220	0.18650624	0.001042774	0.187549
7447041452	574470	4145220	0.209677358	0.000512723	0.21019
7448041452	574480	4145220	0.224621666	0.000137214	0.224759
7449041452	574490	4145220	0.226088462	7.01634E-05	0.226159
7450041452	574500	4145220	0.212536546	4.35216E-05	0.21258
7451041452	574510	4145220	0.191618767	3.00842E-05	0.191649
7452041452	574520	4145220	0.16884092	2.22658E-05	0.168863
7453041452	574530	4145220	0.07391374	1.0007E-05	0.073924
7444041452	574440	4145230	0.081067025	1.0246E-05	0.081077
7445041452	574450	4145230	0.088592324	9.55009E-06	0.088602
7446041452	574460	4145230	0.098222156	9.82617E-06	0.098232
7447041452	574470	4145230	0.106969784	9.43721E-06	0.106979
7448041452	574480	4145230	0.119437546	9.65706E-06	0.119447
7449041452	574490	4145230	0.137379219	1.00925E-05	0.137389
7450041452	574500	4145230	0.154279254	1.01774E-05	0.154289
7451041452	574510	4145230	0.178098738	1.07509E-05	0.178109
7452041452	574520	4145230	0.205946596	1.1064E-05	0.205958
7444041452	574440	4145240	0.236079678	1.10335E-05	0.236091
7445041452	574450	4145240	0.269645912	1.09602E-05	0.269657
7446041452	574460	4145240	0.30519976	1.0914E-05	0.305211
7447041452	574470	4145240	0.340083984	1.09698E-05	0.340095
7448041452	574480	4145240	0.372810531	1.09832E-05	0.372822
7449041452	574490	4145240	0.402741662	1.08387E-05	0.402753
7450041452	574500	4145240	0.425083722	1.06087E-05	0.425094
7451041452	574510	4145240	0.440655138	1.00053E-05	0.440665
7445041452	574450	4145250	0.437020036	1.00093E-05	0.43703

Max GLC for Chronic Calcs

Max GLC: 0.299581

XY	X	Y	2025	2026	2027	2034	2035
574460414518	574460	4145180	0.000719	0.0046598	0		
574470414518	574470	4145180	0.0010832	0.0070197	0		
574480414518	574480	4145180	0.0011578	0.0075014	0		
574490414518	574490	4145180	0.0011072	0.0071734	0		
574500414518	574500	4145180	0.0009705	0.0062876	0		
574510414518	574510	4145180	0.0007992	0.0051776	0		
574520414518	574520	4145180	0.0006473	0.0041936	0		
574530414518	574530	4145180	0.0001082	0.0007023	0		
574450414519	574450	4145190	0.0001212	0.0007876	0		
574460414519	574460	4145190	0.000132	0.0008565	0		
574470414519	574470	4145190	0.0001574	0.0010216	0		
574480414519	574480	4145190	0.0001812	0.001176	0		
574490414519	574490	4145190	0.000212	0.0013752	0		
574500414519	574500	4145190	0.0002519	0.0016338	0		
574510414519	574510	4145190	0.0003033	0.0019673	0		
574520414519	574520	4145190	0.0003684	0.0023887	0		
574440414520	574440	4145200	0.0004503	0.0029199	0		
574450414520	574450	4145200	0.0005474	0.0035496	0		
574460414520	574460	4145200	0.0006657	0.0043224	0		
574470414520	574470	4145200	0.0007683	0.0049806	0		
574480414520	574480	4145200	0.0008219	0.0053254	0		
574490414520	574490	4145200	0.0008106	0.0052516	0		
574500414520	574500	4145200	0.0007432	0.0048153	0		
574510414520	574510	4145200	0.0006454	0.0041813	0		
574430414521	574430	4145210	0.000547	0.0035435	0		
574440414521	574440	4145210	0.0001017	0.0006655	0		
574450414521	574450	4145210	0.0001139	0.0007463	0		
574460414521	574460	4145210	0.0001274	0.0008336	0		
574470414521	574470	4145210	0.0001451	0.0009495	0		
574480414521	574480	4145210	0.0001655	0.001081	0		
574490414521	574490	4145210	0.0001902	0.0012421	0		
574500414521	574500	4145210	0.0002226	0.0014515	0		
574510414521	574510	4145210	0.0002656	0.0017298	0		
574430414522	574430	4145220	0.0003138	0.0020417	0		
574440414522	574440	4145220	0.0003682	0.0023943	0		
574450414522	574450	4145220	0.0004335	0.0028173	0		
574460414522	574460	4145220	0.0005085	0.0033037	0		
574470414522	574470	4145220	0.0005717	0.0037081	0		
574480414522	574480	4145220	0.0006124	0.0039687	0		
574490414522	574490	4145220	0.0006164	0.003994	0		
574500414522	574500	4145220	0.0005795	0.0037544	0		
574510414522	574510	4145220	0.0005224	0.0033848	0		
574520414522	574520	4145220	0.0004603	0.0029824	0		
574530414522	574530	4145220	0.0002015	0.0013056	0		
574440414523	574440	4145230	0.000221	0.001432	0		
574450414523	574450	4145230	0.0002415	0.0015649	0		
574460414523	574460	4145230	0.0002678	0.001735	0		
574470414523	574470	4145230	0.0002916	0.0018895	0		
574480414523	574480	4145230	0.0003256	0.0021097	0		
574490414523	574490	4145230	0.0003746	0.0024266	0		
574500414523	574500	4145230	0.0004206	0.0027251	0		
574510414523	574510	4145230	0.0004856	0.0031458	0		
574520414523	574520	4145230	0.0005615	0.0036377	0		
574440414524	574440	4145240	0.0006437	0.0041699	0		
574450414524	574450	4145240	0.0007352	0.0047628	0		
574460414524	574460	4145240	0.0008321	0.0053907	0		
574470414524	574470	4145240	0.0009272	0.0060069	0		
574480414524	574480	4145240	0.0010165	0.0065849	0		
574490414524	574490	4145240	0.0010981	0.0071136	0		
574500414524	574500	4145240	0.001159	0.0075082	0		
574510414524	574510	4145240	0.0012014	0.0077832	0		
574450414525	574450	4145250	0.0011915	0.007719	0		

Garvey Reservoir Rehab - Unmitigated Standby Generator

Cancer Risk Summary & Maximum Annual GLC for Chronic Calculations

Cancer Risk Summary

Max Risk: 16.96139

XY	X	Y	Offroad Risk	Haul Risk	Total Risk
7446041452	574460	4145250	0.421278557	9.97614E-06	0.421289
7447041452	574470	4145250	0.399287253	9.70817E-06	0.399297
7448041452	574480	4145250	0.375010724	8.57718E-06	0.375019
7446041452	574460	4145260	0.340073355	8.29159E-06	0.340082
7447041452	574470	4145260	0.075401793	1.06897E-05	0.075412
7448041452	574480	4145260	0.08254445	1.02986E-05	0.082555
7447041452	574470	4145270	0.090441762	9.7537E-06	0.090452
7449041451	574490	4145130	0.099529517	9.87175E-06	0.099539
7448041451	574480	4145140	0.111051302	1.01317E-05	0.111061
7449041451	574490	4145140	0.125655484	1.04359E-05	0.125666
7449041451	574490	4145150	0.145234015	1.12569E-05	0.145245
7450041451	574500	4145150	0.1663006	1.15306E-05	0.166312
7446041451	574460	4145160	0.193553236	1.20472E-05	0.193565
7449041451	574490	4145160	0.22590777	1.22193E-05	0.22592
7450041451	574500	4145160	0.264108227	1.22138E-05	0.26412
7451041451	574510	4145160	0.309780839	1.20635E-05	0.309793
7446041451	574460	4145170	0.361352519	1.1996E-05	0.361365
7447041451	574470	4145170	0.416591188	1.21084E-05	0.416603
7448041451	574480	4145170	0.471914889	1.21959E-05	0.471927
7449041451	574490	4145170	0.524230597	1.21411E-05	0.524243
7450041451	574500	4145170	0.56622559	1.19891E-05	0.566238
7451041451	574510	4145170	0.598643897	1.13255E-05	0.598655
7452041451	574520	4145170	0.600897235	1.10503E-05	0.600908
7446041451	574460	4145180	0.57577039	1.10856E-05	0.575781
7447041451	574470	4145180	0.534944581	1.08586E-05	0.534955
7448041451	574480	4145180	0.49038801	9.46237E-06	0.490397
7449041451	574490	4145180	0.43251336	9.17748E-06	0.432523
7450041451	574500	4145180	0.07665601	1.14128E-05	0.076667
7451041451	574510	4145180	0.084330114	1.13402E-05	0.084341
7452041451	574520	4145180	0.091919187	1.02844E-05	0.091929
7453041451	574530	4145180	0.1022399	1.05797E-05	0.10225
7445041451	574450	4145190	0.114803323	1.08984E-05	0.114814
7446041451	574460	4145190	0.133021348	1.21561E-05	0.133034
7447041451	574470	4145190	0.152940006	1.27344E-05	0.152953
7448041451	574480	4145190	0.177131504	1.30682E-05	0.177145
7449041451	574490	4145190	0.207509052	1.33939E-05	0.207522
7450041451	574500	4145190	0.245518188	1.35512E-05	0.245532
7451041451	574510	4145190	0.292785143	1.3592E-05	0.292799
7452041451	574520	4145190	0.352084072	1.3452E-05	0.352098
7444041452	574440	4145200	0.424042085	1.33447E-05	0.424055
7445041452	574450	4145200	0.508680438	1.36326E-05	0.508694
7446041452	574460	4145200	0.599674906	1.38832E-05	0.599689
7447041452	574470	4145200	0.702116756	1.36997E-05	0.70213
7448041452	574480	4145200	0.797320289	1.31711E-05	0.797333
7449041452	574490	4145200	0.857682114	1.24769E-05	0.857695
7450041452	574500	4145200	0.86107275	1.1895E-05	0.861085
7451041452	574510	4145200	0.834542883	1.23741E-05	0.834555
7443041452	574430	4145210	0.660398115	1.1664E-05	0.66041
7444041452	574440	4145210	0.553970407	9.96874E-06	0.55398
7445041452	574450	4145210	0.077580729	1.20682E-05	0.077593
7446041452	574460	4145210	0.084425775	1.07293E-05	0.084437
7447041452	574470	4145210	0.093545416	1.10112E-05	0.093556
7448041452	574480	4145210	0.105205378	1.15099E-05	0.105217
7449041452	574490	4145210	0.93853656	1.26547E-05	0.938549
7450041452	574500	4145210	0.714414455	1.09968E-05	0.714425
7451041452	574510	4145210	0.078218466	1.28116E-05	0.078231
7443041452	574430	4145220	0.085297349	1.15157E-05	0.085309
7444041452	574440	4145220	0.095012212	1.19282E-05	0.095024
7445041452	574450	4145220	1.27389066	1.3446E-05	1.273904
7446041452	574460	4145220	0.898263457	1.22915E-05	0.898276
7447041452	574470	4145220	0.077942113	1.2569E-05	0.077955
7448041452	574480	4145220	0.085966973	1.25146E-05	0.085979

Max GLC for Chronic Calcs

Max GLC: 0.299581

XY	X	Y	2025	2026	2027	2034	2035
57446041452	574460	4145250	0.0011486	0.007441	0		
57447041452	574470	4145250	0.0010886	0.0070526	0		
57448041452	574480	4145250	0.0010224	0.0066238	0		
57446041452	574460	4145260	0.0009272	0.0060067	0		
57447041452	574470	4145260	0.0002056	0.0013319	0		
57448041452	574480	4145260	0.0002251	0.0014581	0		
57447041452	574470	4145270	0.0002466	0.0015975	0		
57449041451	574490	4145130	0.0002714	0.001758	0		
57448041451	574480	4145140	0.0003028	0.0019616	0		
57449041451	574490	4145140	0.0003426	0.0022195	0		
57449041451	574490	4145150	0.000396	0.0025653	0		
57450041451	574500	4145150	0.0004534	0.0029374	0		
57446041451	574460	4145160	0.0005277	0.0034188	0		
57449041451	574490	4145160	0.0006159	0.0039902	0		
57450041451	574500	4145160	0.0007201	0.004665	0		
57451041451	574510	4145160	0.0008446	0.0054717	0		
57446041451	574460	4145170	0.0009852	0.0063826	0		
57447041451	574470	4145170	0.0011358	0.0073582	0		
57448041451	574480	4145170	0.0012867	0.0083354	0		
57449041451	574490	4145170	0.0014293	0.0092594	0		
57450041451	574500	4145170	0.0015438	0.0100012	0		
57451041451	574510	4145170	0.0016322	0.0105738	0		
57452041451	574520	4145170	0.0016383	0.0106136	0		
57446041451	574460	4145180	0.0015698	0.0101698	0		
57447041451	574470	4145180	0.0014585	0.0094487	0		
57448041451	574480	4145180	0.001337	0.0086617	0		
57449041451	574490	4145180	0.0011792	0.0076394	0		
57450041451	574500	4145180	0.000209	0.0013541	0		
57451041451	574510	4145180	0.0002299	0.0014896	0		
57452041451	574520	4145180	0.0002506	0.0016236	0		
57453041451	574530	4145180	0.0002788	0.0018059	0		
57445041451	574450	4145190	0.000313	0.0020278	0		
57446041451	574460	4145190	0.0003627	0.0023496	0		
57447041451	574470	4145190	0.000417	0.0027014	0		
57448041451	574480	4145190	0.0004829	0.0031287	0		
57449041451	574490	4145190	0.0005658	0.0036653	0		
57450041451	574500	4145190	0.0006694	0.0043366	0		
57451041451	574510	4145190	0.0007983	0.0051715	0		
57452041451	574520	4145190	0.0009599	0.0062189	0		
57444041452	574440	4145200	0.0011561	0.0074898	0		
57445041452	574450	4145200	0.0013869	0.0089848	0		
57446041452	574460	4145200	0.001635	0.010592	0		
57447041452	574470	4145200	0.0019143	0.0124014	0		
57448041452	574480	4145200	0.0021739	0.0140829	0		
57449041452	574490	4145200	0.0023384	0.0151491	0		
57450041452	574500	4145200	0.0023477	0.015209	0		
57451041452	574510	4145200	0.0022753	0.0147404	0		
57443041452	574430	4145210	0.0018005	0.0116645	0		
57444041452	574440	4145210	0.0015104	0.0097847	0		
57445041452	574450	4145210	0.0002115	0.0013704	0		
57446041452	574460	4145210	0.0002302	0.0014913	0		
57447041452	574470	4145210	0.000255	0.0016524	0		
57448041452	574480	4145210	0.0002868	0.0018583	0		
57449041452	574490	4145210	0.0025589	0.0165772	0		
57450041452	574500	4145210	0.0019478	0.0126186	0		
57451041452	574510	4145210	0.0002133	0.0013817	0		
57443041452	574430	4145220	0.0002326	0.0015067	0		
57444041452	574440	4145220	0.000259	0.0016783	0		
57445041452	574450	4145220	0.0034732	0.0225005	0		
57446041452	574460	4145220	0.0024491	0.0158659	0		
57447041452	574470	4145220	0.0002125	0.0013768	0		
57448041452	574480	4145220	0.0002344	0.0015185	0		

Garvey Reservoir Rehab - Unmitigated Standby Generator

Cancer Risk Summary & Maximum Annual GLC for Chronic Calculations

Cancer Risk Summary

Max Risk: 16.96139

XY	X	Y	Offroad Risk	Haul Risk	Total Risk
7449041452	574490	4145220	1.73310395	1.54525E-05	1.733119
7450041452	574500	4145220	1.14961694	1.40051E-05	1.149631
7451041452	574510	4145220	0.078037774	1.355E-05	0.078051
7452041452	574520	4145220	0.086413389	1.40009E-05	0.086427
7453041452	574530	4145220	2.866618026	2.063E-05	2.866639
7444041452	574440	4145230	1.77391913	1.93047E-05	1.773938
7445041452	574450	4145230	0.078005887	1.49425E-05	0.078021
7446041452	574460	4145230	0.086530307	1.57052E-05	0.086546
7447041452	574470	4145230	4.185267208	2.77678E-05	4.185295
7448041452	574480	4145230	2.275297478	2.55732E-05	2.275323
7449041452	574490	4145230	0.078218466	1.86065E-05	0.078237
7450041452	574500	4145230	0.085977602	1.71389E-05	0.085995
7451041452	574510	4145230	13.67511542	5.89091E-05	13.67517
7452041452	574520	4145230	5.296556143	4.26777E-05	5.296599
7444041452	574440	4145240	2.653411856	3.22013E-05	2.653444
7445041452	574450	4145240	0.077357521	2.00457E-05	0.077378
7446041452	574460	4145240	0.085063512	1.87619E-05	0.085082
7447041452	574470	4145240	16.96104564	0.000349181	16.96139
7448041452	574480	4145240	8.988257283	0.000100861	8.988358
7449041452	574490	4145240	4.949329502	5.77913E-05	4.949387
7450041452	574500	4145240	2.754142444	3.97907E-05	2.754182
7451041452	574510	4145240	0.076209594	2.16958E-05	0.076231
7445041452	574450	4145250	0.083788037	2.07458E-05	0.083809
7446041452	574460	4145250	7.549320239	0.000508677	7.549829
7447041452	574470	4145250	5.220080825	0.000129354	5.22021
7448041452	574480	4145250	3.494991105	6.97439E-05	3.495061
7446041452	574460	4145260	2.319397004	4.73104E-05	2.319444
7447041452	574470	4145260	0.07472154	2.32238E-05	0.074745
7448041452	574480	4145260	0.082204323	2.31137E-05	0.082227
7447041452	574470	4145270	3.638152475	0.001347595	3.6395
7457041450	574570	4145030	4.099821053	0.000356729	4.100178
7463041450	574630	4145080	3.759343798	0.000157223	3.759501
7461041450	574610	4145090	2.938214654	8.66747E-05	2.938301
7462041450	574620	4145090	2.112355626	5.62389E-05	2.112412
7463041450	574630	4145090	0.073244116	2.63151E-05	0.07327
7464041450	574640	4145090	0.080365515	2.61188E-05	0.080392
7460041451	574600	4145100	0.089123772	2.78427E-05	0.089152
7461041451	574610	4145100	1.802000824	0.001094831	1.803096
7462041451	574620	4145100	2.274372759	0.000807111	2.27518
7463041451	574630	4145100	2.54189288	0.000297294	2.54219
7464041451	574640	4145100	2.478501803	0.000156319	2.478658
7465041451	574650	4145100	2.146708403	9.40037E-05	2.146802
7459041451	574590	4145110	1.723718585	6.24535E-05	1.723781
7460041451	574600	4145110	0.071415936	2.92428E-05	0.071445
7461041451	574610	4145110	0.078239724	2.9766E-05	0.078269
7462041451	574620	4145110	0.086445276	3.11988E-05	0.086476
7463041451	574630	4145110	1.010250107	0.000263195	1.010513
7464041451	574640	4145110	1.282181243	0.001042466	1.283224
7465041451	574650	4145110	1.548914822	0.000807381	1.549722
7466041451	574660	4145110	1.717798258	0.00028619	1.718084
7460041451	574600	4145120	1.722124242	0.000156583	1.722281
7461041451	574610	4145120	1.578803438	9.90147E-05	1.578902
7462041451	574620	4145120	1.351503275	6.80104E-05	1.351571
7463041451	574630	4145120	0.069598385	3.31892E-05	0.069632
7464041451	574640	4145120	0.07594387	3.41787E-05	0.075978
7465041451	574650	4145120	0.083543571	3.54108E-05	0.083579
7466041451	574660	4145120	0.619848659	0.000141792	0.61999
7460041451	574600	4145130	0.783215668	0.000276107	0.783492
7462041451	574620	4145130	0.954798858	0.001047623	0.955846
7463041451	574630	4145130	1.116773475	0.000788283	1.117562
7464041451	574640	4145130	1.234521017	0.000264545	1.234786
7465041451	574650	4145130	1.265100516	0.000144762	1.265245

Max GLC for Chronic Calcs

Max GLC: 0.299581

XY	X	Y	2025	2026	2027	2034	2035
57449041452	574490	4145220	0.0047252	0.0306114	0		
57450041452	574500	4145220	0.0031344	0.0203055	0		
57451041452	574510	4145220	0.0002128	0.0013785	0		
57452041452	574520	4145220	0.0002356	0.0015264	0		
57453041452	574530	4145220	0.0078157	0.0506324	0		
57444041452	574440	4145230	0.0048365	0.0313324	0		
57445041452	574450	4145230	0.0002127	0.0013779	0		
57446041452	574460	4145230	0.0002359	0.0015285	0		
57447041452	574470	4145230	0.0114109	0.0739233	0		
57448041452	574480	4145230	0.0062035	0.0401881	0		
57449041452	574490	4145230	0.0002133	0.0013817	0		
57450041452	574500	4145230	0.0002344	0.0015188	0		
57451041452	574510	4145230	0.0372846	0.2415398	0		
57452041452	574520	4145230	0.0144408	0.0935518	0		
57444041452	574440	4145240	0.0072344	0.0468667	0		
57445041452	574450	4145240	0.0002109	0.0013665	0		
57446041452	574460	4145240	0.0002319	0.0015026	0		
57447041452	574470	4145240	0.0462435	0.2995808	0		
57448041452	574480	4145240	0.0245061	0.1587577	0		
57449041452	574490	4145240	0.0134941	0.087419	0		
57450041452	574500	4145240	0.007509	0.0486459	0		
57451041452	574510	4145240	0.0002078	0.0013463	0		
57445041452	574450	4145250	0.0002284	0.0014801	0		
57446041452	574460	4145250	0.0205829	0.1333459	0		
57447041452	574470	4145250	0.0142323	0.0922018	0		
57448041452	574480	4145250	0.0095289	0.0617316	0		
57446041452	574460	4145260	0.0063237	0.0409672	0		
57447041452	574470	4145260	0.0002037	0.00132	0		
57448041452	574480	4145260	0.0002241	0.0014522	0		
57447041452	574470	4145270	0.0099193	0.0642718	0		
57457041450	574570	4145030	0.011178	0.0724171	0		
57463041450	574630	4145080	0.0102497	0.0664015	0		
57461041450	574610	4145090	0.0080109	0.0518975	0		
57462041450	574620	4145090	0.0057592	0.0373104	0		
57463041450	574630	4145090	0.0001997	0.0012939	0		
57464041450	574640	4145090	0.0002191	0.0014197	0		
57460041451	574600	4145100	0.000243	0.0015744	0		
57461041451	574610	4145100	0.0049131	0.0318381	0		
57462041451	574620	4145100	0.006201	0.0401789	0		
57463041451	574630	4145100	0.0069304	0.0448994	0		
57464041451	574640	4145100	0.0067575	0.0437784	0		
57465041451	574650	4145100	0.0058529	0.0379175	0		
57459041451	574590	4145110	0.0046996	0.0304461	0		
57460041451	574600	4145110	0.0001947	0.0012617	0		
57461041451	574610	4145110	0.0002133	0.0013822	0		
57462041451	574620	4145110	0.0002357	0.0015271	0		
57463041451	574630	4145110	0.0027544	0.0178461	0		
57464041451	574640	4145110	0.0034958	0.0226562	0		
57465041451	574650	4145110	0.004223	0.0273653	0		
57466041451	574660	4145110	0.0046835	0.0303435	0		
57460041451	574600	4145120	0.0046953	0.0304188	0		
57461041451	574610	4145120	0.0043045	0.0278868	0		
57462041451	574620	4145120	0.0036848	0.0238718	0		
57463041451	574630	4145120	0.0001898	0.0012296	0		
57464041451	574640	4145120	0.0002071	0.0013417	0		
57465041451	574650	4145120	0.0002278	0.0014759	0		
57466041451	574660	4145120	0.00169	0.0109495	0		
57460041451	574600	4145130	0.0021354	0.0138362	0		
57462041451	574620	4145130	0.0026032	0.0168738	0		
57463041451	574630	4145130	0.0030448	0.0197324	0		
57464041451	574640	4145130	0.0033659	0.0218074	0		
57465041451	574650	4145130	0.0034492	0.0223464	0		

Garvey Reservoir Rehab - Unmitigated Standby Generator

Cancer Risk Summary & Maximum Annual GLC for Chronic Calculations

Cancer Risk Summary

Max Risk: 16.96139

XY	X	Y	Offroad Risk	Haul Risk	Total Risk
7463041451	574630	4145140	1.197096474	0.000102509	1.197199
7464041451	574640	4145140	1.070909542	7.19901E-05	1.070982
7459041451	574590	4145150	0.067461965	3.78572E-05	0.0675
7460041451	574600	4145150	0.073424808	3.94738E-05	0.073464
7460041451	574600	4145160	0.08051432	4.10089E-05	0.080555
7461041451	574610	4145160	0.344420597	8.07616E-05	0.344501
7461041451	574610	4145170	0.414189045	0.000102601	0.414292
7457041450	574570	4145030	0.505045336	0.000148389	0.505194
7463041450	574630	4145080	0.617552805	0.000274503	0.617827
7461041450	574610	4145090	0.736554564	0.00102853	0.737583
7462041450	574620	4145090	0.842822837	0.000680324	0.843503
7463041450	574630	4145090	0.923592252	0.000260587	0.923853
7464041450	574640	4145090	0.954650053	0.000143831	0.954794
7460041451	574600	4145100	0.910093482	8.96448E-05	0.910183
7461041451	574610	4145100	0.860126773	6.49427E-05	0.860192
7462041451	574620	4145100	0.065251143	4.40256E-05	0.065295
7463041451	574630	4145100	0.070852601	4.64257E-05	0.070899
7464041451	574640	4145100	0.077357521	4.79732E-05	0.077405
7465041451	574650	4145100	0.084606467	4.61691E-05	0.084653
7459041451	574590	4145110	0.255913304	7.63954E-05	0.25599
7460041451	574600	4145110	0.300491134	8.93917E-05	0.300581
7461041451	574610	4145110	0.354061057	0.000112321	0.354173
7462041451	574620	4145110	0.421214783	0.000160373	0.421375
7463041451	574630	4145110	0.49820029	0.000281276	0.498482
7464041451	574640	4145110	0.584443616	0.000936891	0.585381
7465041451	574650	4145110	0.657347605	0.000656094	0.658004
7466041451	574660	4145110	0.713277157	0.000262465	0.71354
7460041451	574600	4145120	0.740954951	0.000140572	0.741096
7461041451	574610	4145120	0.717805091	9.06771E-05	0.717896
7462041451	574620	4145120	0.679498344	6.45716E-05	0.679563
7463041451	574630	4145120	0.062870258	5.1378E-05	0.062922
7464041451	574640	4145120	0.068195363	5.57524E-05	0.068251
7465041451	574650	4145120	0.074232609	5.55532E-05	0.074288
7466041451	574660	4145120	0.080227338	5.35978E-05	0.080281
7460041451	574600	4145130	0.087678234	5.29868E-05	0.087731
7462041451	574620	4145130	0.136220663	6.52834E-05	0.136286
7463041451	574630	4145130	0.153949757	6.91993E-05	0.154019
7464041451	574640	4145130	0.174102252	7.51634E-05	0.174177
7465041451	574650	4145130	0.199919979	8.06862E-05	0.200001
7463041451	574630	4145140	0.229999916	8.87616E-05	0.230089
7464041451	574640	4145140	0.264033824	0.000100831	0.264135
7459041451	574590	4145150	0.307389324	0.000126666	0.307516
7460041451	574600	4145150	0.356941504	0.000179544	0.357121
7460041451	574600	4145160	0.411340486	0.00031402	0.411655
7461041451	574610	4145160	0.46926828	0.001000713	0.470269
7461041451	574610	4145170	0.52774878	0.000651574	0.5284
7457041450	574570	4145030	0.56958434	0.000262404	0.569847
7463041450	574630	4145080	0.580617193	0.000136467	0.580754
7461041450	574610	4145090	0.575632214	9.00224E-05	0.575722
7462041450	574620	4145090	0.555256511	6.5115E-05	0.555322
7463041450	574630	4145090	0.059915409	6.1928E-05	0.059977
7464041450	574640	4145090	0.065495609	7.01247E-05	0.065566
7460041451	574600	4145100	0.070289267	6.58969E-05	0.070355
7461041451	574610	4145100	0.076539091	6.62958E-05	0.076605
7462041451	574620	4145100	0.084117535	6.74793E-05	0.084185
7463041451	574630	4145100	0.092716358	6.88874E-05	0.092785
7464041451	574640	4145100	0.102314303	7.10133E-05	0.102385
7465041451	574650	4145100	0.113442817	7.48651E-05	0.113518
7459041451	574590	4145110	0.126527058	7.85642E-05	0.126606
7460041451	574600	4145110	0.141662687	8.42411E-05	0.141747
7461041451	574610	4145110	0.15929612	9.06314E-05	0.159387
7462041451	574620	4145110	0.180639058	9.62641E-05	0.180735

Max GLC for Chronic Calcs

Max GLC: 0.299581

XY	X	Y	2025	2026	2027	2034	2035
57463041451	574630	4145140	0.0032638	0.0211449	0		
57464041451	574640	4145140	0.0029198	0.0189158	0		
57459041451	574590	4145150	0.0001839	0.0011919	0		
57460041451	574600	4145150	0.0002002	0.0012972	0		
57460041451	574600	4145160	0.0002195	0.0014225	0		
57461041451	574610	4145160	0.000939	0.0060841	0		
57461041451	574610	4145170	0.0011293	0.0073166	0		
57457041450	574570	4145030	0.001377	0.0089218	0		
57463041450	574630	4145080	0.0016837	0.0109101	0		
57461041450	574610	4145090	0.0020082	0.0130189	0		
57462041450	574620	4145090	0.0022979	0.0148927	0		
57463041450	574630	4145090	0.0025181	0.0163155	0		
57464041450	574640	4145090	0.0026028	0.016863	0		
57460041451	574600	4145100	0.0024813	0.0160755	0		
57461041451	574610	4145100	0.0023451	0.0151927	0		
57462041451	574620	4145100	0.0001779	0.0011529	0		
57463041451	574630	4145100	0.0001932	0.0012519	0		
57464041451	574640	4145100	0.0002109	0.0013668	0		
57465041451	574650	4145100	0.0002307	0.0014948	0		
57459041451	574590	4145110	0.0006977	0.0045208	0		
57460041451	574600	4145110	0.0008193	0.0053083	0		
57461041451	574610	4145110	0.0009653	0.0062547	0		
57462041451	574620	4145110	0.0011484	0.0074412	0		
57463041451	574630	4145110	0.0013583	0.0088021	0		
57464041451	574640	4145110	0.0015935	0.0103313	0		
57465041451	574650	4145110	0.0017922	0.0116165	0		
57466041451	574660	4145110	0.0019447	0.0126008	0		
57460041451	574600	4145120	0.0020202	0.0130885	0		
57461041451	574610	4145120	0.0019571	0.0126792	0		
57462041451	574620	4145120	0.0018526	0.0120024	0		
57463041451	574630	4145120	0.0001714	0.0011109	0		
57464041451	574640	4145120	0.0001859	0.001205	0		
57465041451	574650	4145120	0.0002024	0.0013117	0		
57466041451	574660	4145120	0.0002187	0.0014175	0		
57460041451	574600	4145130	0.0002391	0.0015491	0		
57462041451	574620	4145130	0.0003714	0.0024066	0		
57463041451	574630	4145130	0.0004197	0.0027198	0		
57464041451	574640	4145130	0.0004747	0.0030758	0		
57465041451	574650	4145130	0.0005451	0.0035319	0		
57463041451	574630	4145140	0.0006271	0.0040632	0		
57464041451	574640	4145140	0.0007199	0.0046645	0		
57459041451	574590	4145150	0.0008381	0.0054305	0		
57460041451	574600	4145150	0.0009732	0.0063062	0		
57460041451	574600	4145160	0.0011215	0.0072682	0		
57461041451	574610	4145160	0.0012794	0.0082976	0		
57461041451	574610	4145170	0.0014389	0.0093274	0		
57457041450	574570	4145030	0.0015529	0.0100628	0		
57463041450	574630	4145080	0.001583	0.0102565	0		
57461041450	574610	4145090	0.0015694	0.010168	0		
57462041450	574620	4145090	0.0015139	0.0098079	0		
57463041450	574630	4145090	0.0001634	0.0010588	0		
57464041450	574640	4145090	0.0001786	0.0011575	0		
57460041451	574600	4145100	0.0001916	0.0012421	0		
57461041451	574610	4145100	0.0002087	0.0013525	0		
57462041451	574620	4145100	0.0002293	0.0014864	0		
57463041451	574630	4145100	0.0002528	0.0016382	0		
57464041451	574640	4145100	0.000279	0.0018078	0		
57465041451	574650	4145100	0.0003093	0.0020044	0		
57459041451	574590	4145110	0.000345	0.0022355	0		
57460041451	574600	4145110	0.0003862	0.0025029	0		
57461041451	574610	4145110	0.0004343	0.0028144	0		
57462041451	574620	4145110	0.0004925	0.0031914	0		

Garvey Reservoir Rehab - Unmitigated Standby Generator

Cancer Risk Summary & Maximum Annual GLC for Chronic Calculations

Cancer Risk Summary

Max Risk: 16.96139

XY	X	Y	Offroad Risk	Haul Risk	Total Risk
7463041451	574630	4145110	0.20508565	0.00010386	0.20519
7464041451	574640	4145110	0.232136336	0.00011526	0.232252
7465041451	574650	4145110	0.261227781	0.000138593	0.261366
7466041451	574660	4145110	0.302957051	0.000202757	0.30316
7460041451	574600	4145120	0.344920158	0.000399588	0.34532
7461041451	574610	4145120	0.389359811	0.001391917	0.390752
7462041451	574620	4145120	0.431843736	0.000586925	0.432431
7463041451	574630	4145120	0.463879401	0.000258592	0.464138
7464041451	574640	4145120	0.483723656	0.000150733	0.483874
7465041451	574650	4145120	0.471617279	8.94776E-05	0.471707
7466041451	574660	4145120	0.462008705	6.57499E-05	0.462074
7460041451	574600	4145130	0.055238669	7.98236E-05	0.055318
7462041451	574620	4145130	0.062827742	9.46896E-05	0.062922
7463041451	574630	4145130	0.067844608	9.82805E-05	0.067943
7464041451	574640	4145130	0.0736055	9.65948E-05	0.073702
7465041451	574650	4145130	0.080036017	9.77304E-05	0.080134
7463041451	574630	4145140	0.087476284	9.70778E-05	0.087573
7464041451	574640	4145140	0.095862528	9.86958E-05	0.095961
7459041451	574590	4145150	0.105598649	0.000100114	0.105699
7460041451	574600	4145150	0.116875968	0.000105532	0.116982
7460041451	574600	4145160	0.130140902	0.000111154	0.130252
7461041451	574610	4145160	0.145202129	0.000115954	0.145318
7461041451	574610	4145170	0.162644241	0.000120903	0.162765
7457041450	574570	4145030	0.182839251	0.000127807	0.182967
7463041450	574630	4145080	0.206244206	0.000140193	0.206384
7461041450	574610	4145090	0.228522492	0.000163715	0.228686
7462041450	574620	4145090	0.260388093	0.000228295	0.260616
7463041450	574630	4145090	0.294081875	0.000517718	0.2946
7464041450	574640	4145090	0.327222951	0.001422033	0.328645
7460041451	574600	4145100	0.359024778	0.000475935	0.359501
7461041451	574610	4145100	0.384938166	0.000240943	0.385179
7462041451	574620	4145100	0.401636251	0.000150506	0.401787
7463041451	574630	4145100	0.407694755	0.000102712	0.407797
7464041451	574640	4145100	0.402720405	7.45469E-05	0.402795
7465041451	574650	4145100	0	0	0
7459041451	574590	4145110	0	0	0
7460041451	574600	4145110	0	0	0
7461041451	574610	4145110	0	0	0
7462041451	574620	4145110	0	0	0
7463041451	574630	4145110	0	0	0
7464041451	574640	4145110	0	0	0
7465041451	574650	4145110	0	0	0
7466041451	574660	4145110	0	0	0
7460041451	574600	4145120	0	0	0
7461041451	574610	4145120	0	0	0
7462041451	574620	4145120	0	0	0
7463041451	574630	4145120	0	0	0
7464041451	574640	4145120	0	0	0
7465041451	574650	4145120	0	0	0
7466041451	574660	4145120	0	0	0
7460041451	574600	4145130	0	0	0
7462041451	574620	4145130	0	0	0
7463041451	574630	4145130	0	0	0
7464041451	574640	4145130	0	0	0
7465041451	574650	4145130	0	0	0
7463041451	574630	4145140	0	0	0
7464041451	574640	4145140	0	0	0
7459041451	574590	4145150	0	0	0
7460041451	574600	4145150	0	0	0
7460041451	574600	4145160	0	0	0
7461041451	574610	4145160	0	0	0
7461041451	574610	4145170	0	0	0

Max GLC for Chronic Calcs

Max GLC: 0.299581

XY	X	Y	2025	2026	2027	2034	2035
57463041451	574630	4145110	0.0005592	0.0036233	0		
57464041451	574640	4145110	0.0006329	0.0041012	0		
57465041451	574650	4145110	0.0007122	0.0046152	0		
57466041451	574660	4145110	0.000826	0.0053529	0		
57460041451	574600	4145120	0.0009404	0.0060958	0		
57461041451	574610	4145120	0.0010616	0.0068898	0		
57462041451	574620	4145120	0.0011774	0.0076328	0		
57463041451	574630	4145120	0.0012647	0.0081957	0		
57464041451	574640	4145120	0.0013189	0.0085452	0		
57465041451	574650	4145120	0.0012858	0.0083308	0		
57466041451	574660	4145120	0.0012596	0.0081609	0		
57460041451	574600	4145130	0.0001506	0.0009764	0		
57462041451	574620	4145130	0.0001713	0.0011106	0		
57463041451	574630	4145130	0.000185	0.0011992	0		
57464041451	574640	4145130	0.0002007	0.0013009	0		
57465041451	574650	4145130	0.0002182	0.0014145	0		
57463041451	574630	4145140	0.0002385	0.0015459	0		
57464041451	574640	4145140	0.0002614	0.0016941	0		
57459041451	574590	4145150	0.0002879	0.0018661	0		
57460041451	574600	4145150	0.0003187	0.0020653	0		
57460041451	574600	4145160	0.0003548	0.0022996	0		
57461041451	574610	4145160	0.0003959	0.0025657	0		
57461041451	574610	4145170	0.0004434	0.0028738	0		
57457041450	574570	4145030	0.0004985	0.0032306	0		
57463041450	574630	4145080	0.0005623	0.0036441	0		
57461041450	574610	4145090	0.0006231	0.0040378	0		
57462041450	574620	4145090	0.0007099	0.0046012	0		
57463041450	574630	4145090	0.0008018	0.005199	0		
57464041450	574640	4145090	0.0008922	0.0057925	0		
57460041451	574600	4145100	0.0009789	0.0063457	0		
57461041451	574610	4145100	0.0010495	0.0068012	0		
57462041451	574620	4145100	0.001095	0.0070953	0		
57463041451	574630	4145100	0.0011116	0.0072019	0		
57464041451	574640	4145100	0.001098	0.0071138	0		
57465041451	574650	4145100	0	0	0		
57459041451	574590	4145110	0	0	0		
57460041451	574600	4145110	0	0	0		
57461041451	574610	4145110	0	0	0		
57462041451	574620	4145110	0	0	0		
57463041451	574630	4145110	0	0	0		
57464041451	574640	4145110	0	0	0		
57465041451	574650	4145110	0	0	0		
57466041451	574660	4145110	0	0	0		
57460041451	574600	4145120	0	0	0		
57461041451	574610	4145120	0	0	0		
57462041451	574620	4145120	0	0	0		
57463041451	574630	4145120	0	0	0		
57464041451	574640	4145120	0	0	0		
57465041451	574650	4145120	0	0	0		
57466041451	574660	4145120	0	0	0		
57460041451	574600	4145130	0	0	0		
57462041451	574620	4145130	0	0	0		
57463041451	574630	4145130	0	0	0		
57464041451	574640	4145130	0	0	0		
57465041451	574650	4145130	0	0	0		
57463041451	574630	4145140	0	0	0		
57464041451	574640	4145140	0	0	0		
57459041451	574590	4145150	0	0	0		
57460041451	574600	4145150	0	0	0		
57460041451	574600	4145160	0	0	0		
57461041451	574610	4145160	0	0	0		
57461041451	574610	4145170	0	0	0		

Garvey Reservoir Rehab - Unmitigated Standby Generator

Construction Modeling Assumptions

AERMOD Sources

Volume Sources		
Offroad Construction Exhaust		
Release Height	3.66	m
Emissions rate	1	g/s
Init Vert Dimension	3.4	m
Line Volume		
Onroad Hauling Exhaust		
Plume Height	7.315	m
Plume Width	20	m
Release Height	3.66	m
Emissions rate	1	g/s

Meteorology:

SCAQMD	Pico	Rivera	2010 - 2012, 2015 - 2016

SCAQMD Met Data

https://www.aqmd.gov/home/air-quality/meteorological-data/data-for-aermod

AERMOD Sources

Garvey Reservoir Rehab - Unmitigated Standby Generator

Health Risk Assessment Risk Factors

Residential Risk	Abbreviation	UOM	3rd Trimester	0<2	2<16	16<30
Daily Breathing Rate (95th %'ile)	DBR	L/kg-day	361	1090	572	261
Fraction Of Time At Home [a]	FAH	unitless	1	1	1	0.73
Exposure Frequency	EF	days/year	0.96	0.96	0.96	0.96
Age Sensitivity Factor	ASF	unitless	10	10	3	1
Inhalation Absorption Factor	A	unitless	1	1	1	1
Conversion Factor	CF_1	m^3/L	0.001	0.001	0.001	0.001
Conversion Factor	CF_2	$\mu g/m^3$	0.001	0.001	0.001	0.001
Cancer Potency Factor (diesel exhaust)	CPF	$mg/kg\text{-}day^{-1}$	1.1	1.1	1.1	1.1
Averaging Time (for residential exposure)	AT	years	70.00	70.00	70.00	70.00

[a] assume school or daycare will have cancer risk of >1 per million

Garvey Reservoir Rehab - Unmitigated Standby Generator

Health Risk Assessment Exposure Duration Assumptions for Offroad Equipment

Residential Receptors

			Start Date	*9/1/2025*	*12/1/2025*
			End Date	*11/30/2025*	*12/1/2027*
	9/1/2025	*1/31/2027*	*Days*	*90*	*730*
Phase	Start Date	End Date	Duration (days)	3rd Tri	0<2
Demolition - 2025	9/1/2025	11/30/2025	91	91	0
Demolition - 2026			1	0	0
Site Preparation - 2025	11/1/2025	12/31/2025	61	30	31
Site Preparation - 2026	1/1/2026	12/31/2025	0	0	0
Grading - 2025	1/1/2026	2/28/2026	59	0	59
Grading - 2026			1	0	0
Infrastructure - 2025	3/1/2026	10/31/2026	245	0	245
Infrastructure - 2026			1	0	0
Paving - 2025	11/1/2026	1/31/2027	92	0	92
Architectural Coating - 2026			1	0	0

Intake Factor for Inhalation, IF (m^3/kg-day)

Phase	Year	Year	Equation	3rd Trimester	0<2
Demolition - 2025		2025		0.012329142	0
Demolition - 2026		1900	$\frac{DBR \cdot FAH \cdot EF \cdot ED \cdot ASF \cdot A \cdot CF_1}{AT}$	0	0
Site Preparation - 2025		2025		0.004064552	0.012681554
Site Preparation - 2026		2026		0	0
Grading - 2025		2026		0	0.02413586
Grading - 2026		1900		0	0
Infrastructure - 2025		2026		0	0.100225183
Infrastructure - 2026		1900		0	0
Paving - 2025		2026		0	0.037635579
Architectural Coating - 2026		1900		0	0

Risk Calculation Part 1, R1

Equation	3rd Trimester	0<2
	1.35621E-05	0
	0	0
	4.47101E-06	1.39497E-05
$IF \cdot CPF \cdot CF_2$	0	0
	0	2.65494E-05
	0	0
	0	0.000110248
	0	0
	0	4.13991E-05
	0	0

Exposure Durations

Garvey Reservoir Rehab - Unmitigated Standby Generator

Offroad DPM Emissions, Ground Level Concentrations and Health Risk Calculations
Residential Receptors

Phase	Year	Emissions (lbs/day)	Work Hours Per Day	Emissions (g/s)
Demolition - 2025	2025	0.110	10	0.001385969
Demolition - 2026	1900		10	0
Site Preparation - 2025	2025	0.120	10	0.001511967
Site Preparation - 2026	2026	0.100	10	0.001259972
Grading - 2025	2026	0.020	10	0.000251994
Grading - 2026	1900		10	0
Infrastructure - 2025	2026	0.340	10	0.004283906
Infrastructure - 2026	1900		10	0
Paving - 2025	2026	1.030	10	0.012977714
Architectural Coating - 2026	1900		10	0

			AERMOD Column Identifier:	*4*	*4*	*4*	*4*	*4*	*4*	*4*	*4*	*4*	*4*				
Garvey Reservoir Rehab - Unmitigated Standby Generator			Demolition - 2025	Demolition - 2026	ite Preparation - 202	ite Preparation - 202	Grading - 2025	Grading - 2026	nfrastructure - 202	nfrastructure - 202	Paving - 2025	itectural Coating -	Child Risk			
Unique Identifier	X (UTM)	Y (UTM)	2025	1900	2025	2026	2026	1900	2026	1900	2026	1900	3rd Trimester	0<2	Total	per million
396166.283767377.2	396166.28	3767377	5.54804E-05	0	6.0524E-05	5.04367E-05	1.00873E-05	0	0.000171485	0	0.000519498	0	1.02303E-09	4.15247E-08	4.25477E-08	0.0425477
396266.283767377.2	396266.28	3767377	6.14816E-05	0	6.70708E-05	5.58924E-05	1.11785E-05	0	0.000190034	0	0.000575691	0	1.13369E-09	4.60163E-08	4.715E-08	0.04715
396366.283767377.2	396366.28	3767377	7.05043E-05	0	7.69137E-05	6.40948E-05	1.2819E-05	0	0.000217922	0	0.000660176	0	1.30006E-09	5.27694E-08	5.40695E-08	0.0540695
396466.283767377.2	396466.28	3767377	7.99566E-05	0	8.72254E-05	7.26878E-05	1.45376E-05	0	0.000247139	0	0.000748684	0	1.47436E-09	5.98441E-08	6.13184E-08	0.0613184
396566.283767377.2	396566.28	3767377	9.16957E-05	0	0.000100032	8.33598E-05	1.6672E-05	0	0.000283423	0	0.000858606	0	1.69083E-09	6.86303E-08	7.03212E-08	0.0703212
396666.283767377.2	396666.28	3767377	0.000101966	0	0.000111235	9.26962E-05	1.85392E-05	0	0.000315167	0	0.00095477	0	1.8802E-09	7.6317E-08	7.81972E-08	0.0781972
396766.283767377.2	396766.28	3767377	0.000110905	0	0.000120988	0.000100823	2.01646E-05	0	0.000342798	0	0.001038477	0	2.04504E-09	8.30078E-08	8.50529E-08	0.0850529
396866.283767377.2	396866.28	3767377	0.000120468	0	0.00013142	0.000109517	2.19034E-05	0	0.000372357	0	0.001128023	0	2.22138E-09	9.01655E-08	9.23869E-08	0.0923869
396966.283767377.2	396966.28	3767377	0.000132208	0	0.000144227	0.000120189	2.40378E-05	0	0.000408642	0	0.001237944	0	2.43785E-09	9.89517E-08	1.0139E-07	0.1013896
397066.283767377.2	397066.28	3767377	0.000139789	0	0.000152497	0.000127081	2.54162E-05	0	0.000432075	0	0.001308932	0	2.57764E-09	1.04626E-07	1.07204E-07	0.1072036
397166.283767377.2	397166.28	3767377	0.00014166	0	0.000154538	0.000128782	2.57564E-05	0	0.000437858	0	0.001326452	0	2.61214E-09	1.06026E-07	1.08639E-07	0.1086385
397266.283767377.2	397266.28	3767377	0.000139082	0	0.000151726	0.000126438	2.52876E-05	0	0.00042989	0	0.001302314	0	2.56461E-09	1.04097E-07	1.06662E-07	0.1066615
397366.283767377.2	397366.28	3767377	0.000138805	0	0.000151423	0.000126186	2.52372E-05	0	0.000429033	0	0.001299718	0	2.55949E-09	1.03889E-07	1.06449E-07	0.106449
397466.283767377.2	397466.28	3767377	0.000135534	0	0.000147855	0.000123213	2.46425E-05	0	0.000418923	0	0.001269091	0	2.49918E-09	1.01441E-07	1.03941E-07	0.1039405
397566.283767377.2	397566.28	3767377	0.000127731	0	0.000139343	0.000116119	2.32238E-05	0	0.000394805	0	0.001196026	0	2.3553E-09	9.56011E-08	9.79564E-08	0.0979564
397666.283767377.2	397666.28	3767377	0.000118057	0	0.000128789	0.000107324	2.14649E-05	0	0.000364903	0	0.001105442	0	2.17691E-09	8.83605E-08	9.05374E-08	0.0905374
397766.283767377.2	397766.28	3767377	0.000105056	0	0.000114607	9.55059E-05	1.91012E-05	0	0.00032472	0	0.000983711	0	1.93719E-09	7.86303E-08	8.05675E-08	0.0805675
397866.283767377.2	397866.28	3767377	9.39826E-05	0	0.000102526	8.54387E-05	1.70877E-05	0	0.000290492	0	0.000880019	0	1.73299E-09	7.03419E-08	7.20749E-08	0.0720749
396166.283767477.2	396166.28	3767477	5.86404E-05	0	6.39713E-05	5.33094E-05	1.06619E-05	0	0.000181252	0	0.000549087	0	1.0813E-09	4.38898E-08	4.49711E-08	0.0449711
396266.283767477.2	396266.28	3767477	6.47664E-05	0	7.06542E-05	5.88785E-05	1.17757E-05	0	0.000200187	0	0.000606449	0	1.19426E-09	4.84748E-08	4.96691E-08	0.0496691
396366.283767477.2	396366.28	3767477	7.55631E-05	0	8.24324E-05	6.86937E-05	1.37387E-05	0	0.000233559	0	0.000707545	0	1.39335E-09	5.65557E-08	5.79491E-08	0.0579491
396466.283767477.2	396466.28	3767477	8.75655E-05	0	9.55261E-05	7.9605E-05	1.5921E-05	0	0.000270657	0	0.000819932	0	1.61467E-09	6.55391E-08	6.71537E-08	0.0671537
396566.283767477.2	396566.28	3767477	0.000101314	0	0.000110525	9.2104E-05	1.84208E-05	0	0.000313153	0	0.000948671	0	1.86819E-09	7.58295E-08	7.76976E-08	0.0776976
396666.283767477.2	396666.28	3767477	0.000115839	0	0.00012637	0.000105308	2.10617E-05	0	0.000358049	0	0.001084677	0	2.13602E-09	8.67008E-08	8.88368E-08	0.0888368
396766.283767477.2	396766.28	3767477	0.000131279	0	0.000143213	0.000119345	2.38689E-05	0	0.000405772	0	0.001229249	0	2.42072E-09	9.82567E-08	1.00677E-07	0.1006774
396866.283767477.2	396866.28	3767477	0.00014773	0	0.000161161	0.0001343	2.68601E-05	0	0.000456621	0	0.001383295	0	2.72408E-09	1.1057E-07	1.13294E-07	0.113294
396966.283767477.2	396966.28	3767477	0.000167273	0	0.000182479	0.000152066	3.04132E-05	0	0.000517025	0	0.00156628	0	3.08443E-09	1.25196E-07	1.28281E-07	0.1282808
397066.283767477.2	397066.28	3767477	0.000182213	0	0.000198778	0.000165649	3.31297E-05	0	0.000563205	0	0.00170618	0	3.35993E-09	1.36379E-07	1.39739E-07	0.1397388
397166.283767477.2	397166.28	3767477	0.000188603	0	0.000205748	0.000171457	3.42914E-05	0	0.000582954	0	0.001766007	0	3.47774E-09	1.41161E-07	1.44639E-07	0.1446388
397266.283767477.2	397266.28	3767477	0.000187023	0	0.000204025	0.000170021	3.40041E-05	0	0.00057807	0	0.001751213	0	3.44861E-09	1.39978E-07	1.43427E-07	0.1434271
397366.283767477.2	397366.28	3767477	0.000183544	0	0.00020023	0.000166858	3.33716E-05	0	0.000567318	0	0.001718639	0	3.38446E-09	1.37375E-07	1.40759E-07	0.1407592
397466.283767477.2	397466.28	3767477	0.000178111	0	0.000194303	0.000161919	3.23838E-05	0	0.000550525	0	0.001667766	0	3.28428E-09	1.33308E-07	1.36593E-07	0.1365927
397566.283767477.2	397566.28	3767477	0.000165249	0	0.000180272	0.000150226	3.00453E-05	0	0.00051077	0	0.001547333	0	3.04711E-09	1.23682E-07	1.26729E-07	0.126729
397666.283767477.2	397666.28	3767477	0.000148687	0	0.000162204	0.00013517	2.7034E-05	0	0.000459577	0	0.001392249	0	2.74171E-09	1.11286E-07	1.14027E-07	0.1140274
397766.283767477.2	397766.28	3767477	0.000131043	0	0.000142956	0.00011913	2.38261E-05	0	0.000405043	0	0.001227043	0	2.41638E-09	9.80804E-08	1.00497E-07	0.1004968
397866.283767477.2	397866.28	3767477	0.000114245	0	0.000124631	0.00010386	2.07719E-05	0	0.000353122	0	0.001069753	0	2.10663E-09	8.55078E-08	8.76145E-08	0.0876145
396166.283767577.2	396166.28	3767577	6.05946E-05	0	6.61032E-05	5.5086E-05	1.10172E-05	0	0.000187292	0	0.000567386	0	1.11734E-09	4.53524E-08	4.64698E-08	0.0464698
396266.283767577.2	396266.28	3767577	6.82451E-05	0	7.44492E-05	6.2041E-05	1.24082E-05	0	0.00021094	0	0.000639023	0	1.25841E-09	5.10786E-08	5.2337E-08	0.052337
396366.283767577.2	396366.28	3767577	7.92775E-05	0	8.64845E-05	7.20704E-05	1.44141E-05	0	0.000245039	0	0.000742325	0	1.46184E-09	5.93358E-08	6.07976E-08	0.0607976
396466.283767577.2	396466.28	3767577	9.36361E-05	0	0.000102148	8.51237E-05	1.70247E-05	0	0.000289421	0	0.000876774	0	1.7266E-09	7.00826E-08	7.18092E-08	0.0718092
396566.283767577.2	396566.28	3767577	0.000111612	0	0.000121759	0.000101466	2.02931E-05	0	0.000344983	0	0.001045095	0	2.05807E-09	8.35369E-08	8.5595E-08	0.085595

Garvey Reservoir Rehab - Unmitigated Standby Generator			Demolition - 2025	Demolition - 2026	ite Preparation - 202	te Preparation - 202	Grading - 2025	Grading - 2026	nfrastructure - 202	nfrastructure - 202	Paving - 2025	itectural Coating -	Child Risk			
Unique Identifier	X (UTM)	Y (UTM)	2025	1900	2025	2026	2026	1900	2026	1900	2026	1900	3rd Trimester	0<2	Total	per million
396666.283767577.2	396666.28	3767577	0.000133261	0	0.000145376	0.000121146	2.42293E-05	0	0.000411898	0	0.001247807	0	2.45727E-09	9.97401E-08	1.02197E-07	0.1021974
396766.283767577.2	396766.28	3767577	0.000152859	0	0.000166755	0.000138962	2.77925E-05	0	0.000472472	0	0.001431312	0	2.81864E-09	1.14408E-07	1.17227E-07	0.1172267
396866.283767577.2	396866.28	3767577	0.000183364	0	0.000200033	0.000166694	3.33389E-05	0	0.000566761	0	0.001716952	0	3.38114E-09	1.3724E-07	1.40621E-07	0.140621
396966.283767577.2	396966.28	3767577	0.000214673	0	0.000234189	0.000195157	3.90314E-05	0	0.000663534	0	0.002010118	0	3.95846E-09	1.60673E-07	1.64632E-07	0.1646319
397066.283767577.2	397066.28	3767577	0.000243307	0	0.000265426	0.000221188	4.42376E-05	0	0.00075204	0	0.002278238	0	4.48646E-09	1.82105E-07	1.86591E-07	0.1865913
397166.283767577.2	397166.28	3767577	0.000262821	0	0.000286714	0.000238929	4.77857E-05	0	0.000812357	0	0.002460964	0	4.8463E-09	1.96711E-07	2.01557E-07	0.2015568
397266.283767577.2	397266.28	3767577	0.000265815	0	0.00028998	0.00024165	4.833E-05	0	0.00082161	0	0.002488996	0	4.9015E-09	1.98951E-07	2.03853E-07	0.2038527
397366.283767577.2	397366.28	3767577	0.000258372	0	0.000281861	0.000234884	4.69768E-05	0	0.000798606	0	0.002419305	0	4.76426E-09	1.93381E-07	1.98145E-07	0.1981449
397466.283767577.2	397466.28	3767577	0.000247368	0	0.000269856	0.00022488	4.4976E-05	0	0.000764591	0	0.002316262	0	4.56134E-09	1.85144E-07	1.89706E-07	0.1897056
397566.283767577.2	397566.28	3767577	0.000222601	0	0.000242837	0.000202364	4.04728E-05	0	0.000688038	0	0.002084351	0	4.10465E-09	1.66607E-07	1.70712E-07	0.1707116
397666.283767577.2	397666.28	3767577	0.000193454	0	0.00021104	0.000175867	3.51734E-05	0	0.000597948	0	0.001811429	0	3.56719E-09	1.44792E-07	1.48359E-07	0.1483589
397766.283767577.2	397766.28	3767577	0.000164224	0	0.000179153	0.000149294	2.98588E-05	0	0.0005076	0	0.001537729	0	3.0282E-09	1.22914E-07	1.25942E-07	0.1259425
397866.283767577.2	397866.28	3767577	0.000138264	0	0.000150834	0.000125695	2.5139E-05	0	0.000427362	0	0.001294657	0	2.54953E-09	1.03485E-07	1.06034E-07	0.1060344
396166.283767677.2	396166.28	3767677	6.29369E-05	0	6.86584E-05	5.72153E-05	1.14431E-05	0	0.000194532	0	0.000589318	0	1.16053E-09	4.71056E-08	4.82661E-08	0.0482661
396266.283767677.2	396266.28	3767677	7.15022E-05	0	7.80024E-05	6.5002E-05	1.30004E-05	0	0.000221007	0	0.00066952	0	1.31847E-09	5.35163E-08	5.48348E-08	0.0548348
396366.283767677.2	396366.28	3767677	8.39759E-05	0	9.16101E-05	7.63417E-05	1.52683E-05	0	0.000259562	0	0.00078632	0	1.54848E-09	6.28524E-08	6.44008E-08	0.0644008
396466.283767677.2	396466.28	3767677	0.000100608	0	0.000109754	9.14614E-05	1.82923E-05	0	0.000310969	0	0.000942052	0	1.85515E-09	7.53004E-08	7.71556E-08	0.0771556
396566.283767677.2	396566.28	3767677	0.00012112	0	0.000132131	0.000110109	2.20218E-05	0	0.000374371	0	0.001134122	0	2.23339E-09	9.0653E-08	9.28864E-08	0.0928864
396666.283767677.2	396666.28	3767677	0.000144002	0	0.000157093	0.000130911	2.61822E-05	0	0.000445098	0	0.001348384	0	2.65533E-09	1.07779E-07	1.10435E-07	0.1104348
396766.283767677.2	396766.28	3767677	0.000179719	0	0.000196057	0.000163381	3.26761E-05	0	0.000555494	0	0.00168282	0	3.31393E-09	1.34512E-07	1.37826E-07	0.1378256
396866.283767677.2	396866.28	3767677	0.000229932	0	0.000250835	0.000209029	4.18059E-05	0	0.0007107	0	0.002153003	0	4.23984E-09	1.72094E-07	1.76334E-07	0.1763343
396966.283767677.2	396966.28	3767677	0.00028939	0	0.000315699	0.000263082	5.26164E-05	0	0.000894479	0	0.002709747	0	5.33622E-09	2.16596E-07	2.21933E-07	0.2219325
397066.283767677.2	397066.28	3767677	0.00034451	0	0.00037583	0.000313191	6.26383E-05	0	0.00106485	0	0.00322587	0	6.35261E-09	2.57851E-07	2.64204E-07	0.2642039
397166.283767677.2	397166.28	3767677	0.000389915	0	0.000425362	0.000354468	7.08936E-05	0	0.001205191	0	0.00365102	0	7.18984E-09	2.91834E-07	2.99024E-07	0.2990243
397266.283767677.2	397266.28	3767677	0.000415472	0	0.000453242	0.000377702	7.55404E-05	0	0.001284186	0	0.003890329	0	7.66111E-09	3.10963E-07	3.18624E-07	0.3186241
397366.283767677.2	397366.28	3767677	0.000398674	0	0.000434917	0.000362431	7.24862E-05	0	0.001232265	0	0.003733039	0	7.35136E-09	2.9839E-07	3.05742E-07	0.3057418
397466.283767677.2	397466.28	3767677	0.000369888	0	0.000403514	0.000336261	6.72523E-05	0	0.001143289	0	0.003463492	0	6.82055E-09	2.76845E-07	2.83666E-07	0.2836655
397566.283767677.2	397566.28	3767677	0.000316098	0	0.000344834	0.000287362	5.74724E-05	0	0.00097703	0	0.002959827	0	5.8287E-09	2.36586E-07	2.42415E-07	0.2424145
397666.283767677.2	397666.28	3767677	0.000258968	0	0.000282511	0.000235426	4.70852E-05	0	0.000800448	0	0.002424886	0	4.77525E-09	1.93827E-07	1.98602E-07	0.198602
397766.283767677.2	397766.28	3767677	0.000208422	0	0.00022737	0.000189475	3.78949E-05	0	0.000644214	0	0.001951589	0	3.8432E-09	1.55995E-07	1.59838E-07	0.1598382
397866.283767677.2	397866.28	3767677	0.000167273	0	0.000182479	0.000152066	3.04132E-05	0	0.000517025	0	0.00156628	0	3.08443E-09	1.25196E-07	1.28281E-07	0.1282808
396166.283767777.2	396166.28	3767777	6.44892E-05	0	7.03518E-05	5.86265E-05	1.17253E-05	0	0.00019933	0	0.000603853	0	1.18915E-09	4.82674E-08	4.94565E-08	0.0494565
396266.283767777.2	396266.28	3767777	7.49809E-05	0	8.17974E-05	6.81645E-05	1.36329E-05	0	0.000231759	0	0.000702094	0	1.38261E-09	5.612E-08	5.75026E-08	0.0575026
396366.283767777.2	396366.28	3767777	8.78705E-05	0	9.58587E-05	7.98822E-05	1.59764E-05	0	0.0002716	0	0.000822787	0	1.62029E-09	6.57673E-08	6.73876E-08	0.0673876
396466.283767777.2	396466.28	3767777	0.000105431	0	0.000115015	9.58461E-05	1.91692E-05	0	0.000325877	0	0.000987215	0	1.94409E-09	7.89104E-08	8.08544E-08	0.0808544
396566.283767777.2	396566.28	3767777	0.000127107	0	0.000138662	0.000115552	2.31104E-05	0	0.000392877	0	0.001190186	0	2.3438E-09	9.51343E-08	9.74781E-08	0.0974781
396666.283767777.2	396666.28	3767777	0.000158402	0	0.000172803	0.000144002	2.88004E-05	0	0.000489608	0	0.001483223	0	2.92087E-09	1.18557E-07	1.21478E-07	0.1214783
396766.283767777.2	396766.28	3767777	0.000208505	0	0.00022746	0.00018955	3.791E-05	0	0.000644471	0	0.001952367	0	3.84474E-09	1.56057E-07	1.59902E-07	0.159902
396866.283767777.2	396866.28	3767777	0.000281116	0	0.000306672	0.00025556	5.1112E-05	0	0.000868905	0	0.00263227	0	5.18365E-09	2.10403E-07	2.15587E-07	0.2155871
396966.283767777.2	396966.28	3767777	0.000381266	0	0.000415927	0.000346606	6.93212E-05	0	0.00117846	0	0.003570039	0	7.03037E-09	2.85362E-07	2.92392E-07	0.2923919
397066.283767777.2	397066.28	3767777	0.000506558	0	0.000552609	0.000460507	9.21014E-05	0	0.001565725	0	0.004743225	0	9.34069E-09	3.79137E-07	3.88478E-07	0.3884776
397166.283767777.2	397166.28	3767777	0.000631877	0	0.000689321	0.000574434	0.000114887	0	0.001953075	0	0.00591667	0	1.16515E-08	4.72933E-07	4.84585E-07	0.4845846
397266.283767777.2	397266.28	3767777	0.000721134	0	0.000786691	0.000655576	0.000131115	0	0.002228959	0	0.006752434	0	1.32974E-08	5.39738E-07	5.53035E-07	0.5530351
397366.283767777.2	397366.28	3767777	0.000702146	0	0.000765977	0.000638315	0.000127663	0	0.002170269	0	0.00657464	0	1.29472E-08	5.25526E-07	5.38473E-07	0.5384734
397466.283767777.2	397466.28	3767777	0.000609771	0	0.000665205	0.000554337	0.000110867	0	0.001884747	0	0.005709675	0	1.12439E-08	4.56388E-07	4.67631E-07	0.4676314
397566.283767777.2	397566.28	3767777	0.000476275	0	0.000519572	0.000432977	8.65954E-05	0	0.001472121	0	0.004459662	0	8.78227E-09	3.56471E-07	3.65253E-07	0.3652533
397666.283767777.2	397666.28	3767777	0.000356166	0	0.000388545	0.000323788	6.47575E-05	0	0.001100878	0	0.003335013	0	6.56754E-09	2.66575E-07	2.73143E-07	0.2731428
397766.283767777.2	397766.28	3767777	0.000266356	0	0.00029057	0.000242141	4.84283E-05	0	0.000823281	0	0.002494057	0	4.91147E-09	1.99356E-07	2.04267E-07	0.2042672
397866.283767777.2	397866.28	3767777	0.00020292	0	0.000221367	0.000184473	3.68945E-05	0	0.000627207	0	0.001900067	0	3.74174E-09	1.51877E-07	1.55619E-07	0.1556185
396166.283767877.2	396166.28	3767877	6.54593E-05	0	7.14102E-05	5.95085E-05	1.19017E-05	0	0.000202329	0	0.000612937	0	1.20704E-09	4.89935E-08	5.02005E-08	0.0502005
396266.283767877.2	396266.28	3767877	7.64778E-05	0	8.34303E-05	6.95253E-05	1.39051E-05	0	0.000236386	0	0.00071611	0	1.41021E-09	5.72403E-08	5.86506E-08	0.0586506
396366.283767877.2	396366.28	3767877	9.06008E-05	0	9.88373E-05	8.23644E-05	1.64729E-05	0	0.000280039	0	0.000848353	0	1.67064E-09	6.78108E-08	6.94815E-08	0.0694815
396466.283767877.2	396466.28	3767877	0.000108729	0	0.000118614	9.88448E-05	1.9769E-05	0	0.000336072	0	0.001018102	0	2.00492E-09	8.13792E-08	8.33841E-08	0.0833841
396566.283767877.2	396566.28	3767877	0.000133122	0	0.000145224	0.00012102	2.42041E-05	0	0.000411469	0	0.001246509	0	2.45471E-09	9.96364E-08	1.02091E-07	0.1020911
397466.283767877.2	397466.28	3767877	0.001157118	0	0.001262311	0.001051926	0.000210385	0	0.003576547	0	0.010834834	0	2.13367E-08	8.66053E-07	8.8739E-07	0.88739
397566.283767877.2	397566.28	3767877	0.000736227	0	0.000803157	0.000669297	0.000133859	0	0.002275611	0	0.006893762	0	1.35757E-08	5.51034E-07	5.6461E-07	0.56461
397666.283767877.2	397666.28	3767877	0.000451022	0	0.000492024	0.00041002	8.2004E-05	0	0.001394069	0	0.004223208	0	8.31663E-09	3.37571E-07	3.45887E-07	0.3458874
397766.283767877.2	397766.28	3767877	0.000311538	0	0.00033986	0.000283217	5.66433E-05	0	0.000962936	0	0.002917131	0	5.74461E-09	2.33173E-07	2.38918E-07	0.2389176
397866.283767877.2	397866.28	3767877	0.000241131	0	0.000263052	0.00021921	4.3842E-05	0	0.000745314	0	0.002257863	0	4.44634E-09	1.80476E-07	1.84923E-07	0.1849225
396166.283767977.2	396166.28	3767977	6.54593E-05	0	7.14102E-05	5.95085E-05	1.19017E-05	0	0.000202329	0	0.000612937	0	1.20704E-09	4.89935E-08	5.02005E-08	0.0502005
396266.283767977.2	396266.28	3767977	7.68936E-05	0	8.38839E-05	6.99033E-05	1.39807E-05	0	0.000237671	0	0.000720004	0	1.41788E-09	5.75516E-08	5.89694E-08	0.0589694
396366.283767977.2	396366.28	3767977	9.14463E-05	0	9.97596E-05	8.3133E-05	1.66266E-05	0	0.000282652	0	0.00085627	0	1.68623E-09	6.84436E-08	7.01298E-08	0.0701298
396466.283767977.2	396466.28	3767977	0.000109935	0	0.000119929	9.9941E-05	1.99882E-05	0	0.000339799	0	0.001029392	0	2.02715E-09	8.22817E-08	8.43089E-08	0.0843089
397466.283767977.2	397466.28	3767977	0.002273031	0	0.002479671	0.002066392	0.000413278	0	0.007025734	0	0.02128384	0	4.19136E-08	1.70127E-06	1.74318E-06	1.7431802
397566.283767977.2	397566.28	3767977	0.00104358	0	0.00113845	0.000948709	0.000189742	0	0.00322561	0	0.009771699	0	1.92431E-08	7.81075E-07	8.00318E-07	0.8003177
397666.283767977.2	397666.28	3767977	0.000572516	0	0.000624563	0.000520469	0.000104094	0	0.001769596	0	0.005360834	0	1.05569E-08	4.28504E-07	4.39061E-07	0.4390608
397766.283767977.2	397766.28	3767977	0.000413019	0	0.000450566	0.000375472	7.50943E-05	0	0.001276604	0	0.003867359	0	7.61587E-09	3.09127E-07	3.16743E-07	0.3167428
397866.283767977.2	397866.28	3767977	0.000274727	0	0.000299702	0.000249752	4.99503E-05	0	0.000849156	0	0.002572442	0	5.06583E-09	2.05621E-07	2.10687E-07	0.2106871
396166.283768077.2	396166.28	3768077	6.60276E-05	0	7.20301E-05	6.00251E-05	1.2005E-05	0	0.000204085	0	0.000618258	0	1.21752E-09	4.94188E-08	5.06363E-08	0.0506363

Garvey Reservoir Rehab - Unmitigated Standby Generator			Demolition - 2025	Demolition - 2026	ite Preparation - 202	te Preparation - 202	Grading - 2025	Grading - 2026	nfrastructure - 202	nfrastructure - 202	Paving - 2025	itectural Coating -	Child Risk			
Unique Identifier	X (UTM)	Y (UTM)	2025	1900	2025	2026	2026	1900	2026	1900	2026	1900	3rd Trimester	0<2	Total	per million
396266.283768077.2	396266.28	3768077	7.65332E-05	0	8.34908E-05	6.95757E-05	1.39151E-05	0	0.000236557	0	0.000716629	0	1.41124E-09	5.72818E-08	5.86931E-08	0.0586931
396366.283768077.2	396366.28	3768077	9.10305E-05	0	9.9306E-05	8.2755E-05	1.6551E-05	0	0.000281367	0	0.000852376	0	1.67856E-09	6.81324E-08	6.9811E-08	0.069811
396466.283768077.2	396466.28	3768077	0.000110836	0	0.000120912	0.00010076	2.0152E-05	0	0.000342584	0	0.001037828	0	2.04376E-09	8.2956E-08	8.49997E-08	0.0849997
397466.283768077.2	397466.28	3768077	0.005718759	0	0.006238647	0.005198872	0.001039774	0	0.017676165	0	0.053548383	0	1.05451E-07	4.28025E-06	4.3857E-06	4.3856974
397566.283768077.2	397566.28	3768077	0.001856326	0	0.002025083	0.001687569	0.000337514	0	0.005737735	0	0.017381961	0	3.42298E-08	1.38938E-06	1.42361E-06	1.4236101
397666.283768077.2	397666.28	3768077	0.000861186	0	0.000939476	0.000782896	0.000156579	0	0.002661848	0	0.008063832	0	1.58799E-08	6.44561E-07	6.60441E-07	0.6604406
397766.283768077.2	397766.28	3768077	0.000493655	0	0.000538532	0.000448777	8.97554E-05	0	0.001525841	0	0.004622402	0	9.10275E-09	3.69479E-07	3.78582E-07	0.3785821
397866.283768077.2	397866.28	3768077	0.000316223	0	0.00034497	0.000287475	5.74951E-05	0	0.000977416	0	0.002960995	0	5.831E-09	2.36679E-07	2.4251E-07	0.2425102
396166.283768177.2	396166.28	3768177	6.54455E-05	0	7.13951E-05	5.94959E-05	1.18992E-05	0	0.000202286	0	0.000612808	0	1.20678E-09	4.89831E-08	5.01899E-08	0.0501899
396266.283768177.2	396266.28	3768177	7.61174E-05	0	8.30372E-05	6.91977E-05	1.38395E-05	0	0.000235272	0	0.000712736	0	1.40357E-09	5.69706E-08	5.83742E-08	0.0583742
396366.283768177.2	396366.28	3768177	9.04206E-05	0	9.86407E-05	8.22006E-05	1.64401E-05	0	0.000279482	0	0.000846666	0	1.66731E-09	6.7676E-08	6.93433E-08	0.0693433
396466.283768177.2	396466.28	3768177	0.00010927	0	0.000119203	9.93362E-05	1.98672E-05	0	0.000337743	0	0.001023163	0	2.01488E-09	8.17838E-08	8.37987E-08	0.0837987
397466.283768177.2	397466.28	3768177	0.007527422	0	0.008211733	0.006843111	0.001368622	0	0.023266576	0	0.070484041	0	1.38802E-07	5.63395E-06	5.77275E-06	5.7727545
397566.283768177.2	397566.28	3768177	0.002317923	0	0.002528643	0.002107203	0.000421441	0	0.007164489	0	0.021704188	0	4.27414E-08	1.73487E-06	1.77761E-06	1.7776074
397666.283768177.2	397666.28	3768177	0.001028791	0	0.001122318	0.000935265	0.000187053	0	0.0031799	0	0.009633227	0	1.89704E-08	7.70006E-07	7.88977E-07	0.7889766
397766.283768177.2	397766.28	3768177	0.000578906	0	0.000631533	0.000526278	0.000105256	0	0.001789345	0	0.005420661	0	1.06747E-08	4.33286E-07	4.43961E-07	0.4439607
397866.283768177.2	397866.28	3768177	0.00035406	0	0.000386247	0.000321873	6.43745E-05	0	0.001094367	0	0.003315287	0	6.52869E-09	2.64999E-07	2.71527E-07	0.2715272
396166.283768277.2	396166.28	3768277	6.36992E-05	0	6.949E-05	5.79083E-05	1.15817E-05	0	0.000196888	0	0.000596456	0	1.17458E-09	4.76761E-08	4.88507E-08	0.0488507
396266.283768277.2	396266.28	3768277	7.42325E-05	0	8.09809E-05	6.74841E-05	1.34968E-05	0	0.000229446	0	0.000695086	0	1.36881E-09	5.55599E-08	5.69287E-08	0.0569287
396366.283768277.2	396366.28	3768277	8.78705E-05	0	9.58587E-05	7.98822E-05	1.59764E-05	0	0.0002716	0	0.000822787	0	1.62029E-09	6.57673E-08	6.73876E-08	0.0673876
396466.283768277.2	396466.28	3768277	0.00010586	0	0.000115484	9.62367E-05	1.92473E-05	0	0.000327205	0	0.000991238	0	1.95201E-09	7.92319E-08	8.11839E-08	0.0811839
397366.283768277.2	397366.28	3768277	0.006069479	0	0.00662125	0.005517708	0.001103542	0	0.018760208	0	0.056832394	0	1.11918E-07	4.54274E-06	4.65466E-06	4.654663
397466.283768277.2	397466.28	3768277	0.004236257	0	0.004621371	0.003851143	0.000770229	0	0.013093886	0	0.039666772	0	7.81145E-08	3.17066E-06	3.24877E-06	3.2487714
397566.283768277.2	397566.28	3768277	0.00214598	0	0.002341069	0.001950891	0.000390178	0	0.006633028	0	0.020094173	0	3.95708E-08	1.60617E-06	1.64574E-06	1.6457446
397666.283768277.2	397666.28	3768277	0.00107827	0	0.001176295	0.000980246	0.000196049	0	0.003332836	0	0.010096532	0	1.98828E-08	8.07039E-07	8.26922E-07	0.8269219
397766.283768277.2	397766.28	3768277	0.000617713	0	0.000673868	0.000561557	0.000112311	0	0.001909294	0	0.005784037	0	1.13903E-08	4.62331E-07	4.73722E-07	0.4737218
397866.283768277.2	397866.28	3768277	0.000400323	0	0.000436716	0.00036393	7.27861E-05	0	0.001237363	0	0.003748483	0	7.38177E-09	2.99625E-07	3.07007E-07	0.3070067
396166.283768377.2	396166.28	3768377	5.85018E-05	0	6.38201E-05	5.31834E-05	1.06367E-05	0	0.000180824	0	0.000547789	0	1.07874E-09	4.37861E-08	4.48648E-08	0.0448648
396266.283768377.2	396266.28	3768377	7.19318E-05	0	7.84711E-05	6.53926E-05	1.30785E-05	0	0.000222335	0	0.000673543	0	1.32639E-09	5.38379E-08	5.51643E-08	0.0551643
396366.283768377.2	396366.28	3768377	8.44887E-05	0	9.21695E-05	7.68079E-05	1.53616E-05	0	0.000261147	0	0.000791121	0	1.55793E-09	6.32362E-08	6.47941E-08	0.0647941
396466.283768377.2	396466.28	3768377	0.000101093	0	0.000110283	9.19024E-05	1.83805E-05	0	0.000312468	0	0.000946594	0	1.8641E-09	7.56635E-08	7.75276E-08	0.0775276
397266.283768377.2	397266.28	3768377	0.001730078	0	0.001887358	0.001572798	0.00031456	0	0.005347514	0	0.016199821	0	3.19018E-08	1.29489E-06	1.32679E-06	1.326791
397366.283768377.2	397366.28	3768377	0.002415246	0	0.002634814	0.002195678	0.000439136	0	0.007465305	0	0.022615483	0	4.4536E-08	1.80771E-06	1.85224E-06	1.8522439
397466.283768377.2	397466.28	3768377	0.002256996	0	0.002462177	0.002051814	0.000410363	0	0.006976169	0	0.021133688	0	4.16179E-08	1.68926E-06	1.73088E-06	1.7308825
397566.283768377.2	397566.28	3768377	0.001582666	0	0.001726545	0.001438787	0.000287757	0	0.004891877	0	0.014819511	0	2.91836E-08	1.18456E-06	1.21374E-06	1.2137414
397666.283768377.2	397666.28	3768377	0.001001557	0	0.001092608	0.000910506	0.000182101	0	0.003095722	0	0.009378215	0	1.84682E-08	7.49622E-07	7.68091E-07	0.7680907
397766.283768377.2	397766.28	3768377	0.000633748	0	0.000691362	0.000576135	0.000115227	0	0.001958859	0	0.005934189	0	1.1686E-08	4.74333E-07	4.8602E-07	0.4860195
397866.283768377.2	397866.28	3768377	0.000429221	0	0.000468241	0.000390201	7.80402E-05	0	0.001326683	0	0.004019068	0	7.91463E-09	3.21253E-07	3.29168E-07	0.329168
396166.283768477.2	396166.28	3768477	5.6007E-05	0	6.10986E-05	5.09155E-05	1.01831E-05	0	0.000173113	0	0.000524429	0	1.03274E-09	4.19189E-08	4.29516E-08	0.0429516
396266.283768477.2	396266.28	3768477	6.87302E-05	0	7.49784E-05	6.2482E-05	1.24964E-05	0	0.000212439	0	0.000643565	0	1.26735E-09	5.14416E-08	5.2709E-08	0.052709
396366.283768477.2	396366.28	3768477	7.96655E-05	0	8.69078E-05	7.24232E-05	1.44846E-05	0	0.000246239	0	0.000745959	0	1.46899E-09	5.96262E-08	6.10952E-08	0.0610952
396466.283768477.2	396466.28	3768477	9.50636E-05	0	0.000103706	8.64215E-05	1.72843E-05	0	0.000293833	0	0.000890141	0	1.75293E-09	7.11511E-08	7.2904E-08	0.072904
397166.283768477.2	397166.28	3768477	0.00066406	0	0.000724429	0.00060369	0.000120738	0	0.002052548	0	0.006218012	0	1.22449E-08	4.9702E-07	5.09265E-07	0.509265
397266.283768477.2	397266.28	3768477	0.000989194	0	0.001079121	0.000899267	0.000179853	0	0.003057509	0	0.009262454	0	1.82403E-08	7.40369E-07	7.5861E-07	0.7586096
397366.283768477.2	397366.28	3768477	0.001269562	0	0.001384977	0.001154147	0.000230829	0	0.0039241	0	0.011887716	0	2.34101E-08	9.50213E-07	9.73623E-07	0.9736227
397466.283768477.2	397466.28	3768477	0.001279236	0	0.00139553	0.001162942	0.000232588	0	0.003954002	0	0.0119783	0	2.35885E-08	9.57453E-07	9.81042E-07	0.9810417
397566.283768477.2	397566.28	3768477	0.001067682	0	0.001164744	0.00097062	0.000194124	0	0.003300107	0	0.009997382	0	1.96875E-08	7.99114E-07	8.18801E-07	0.8188014
397666.283768477.2	397666.28	3768477	0.000783669	0	0.000854911	0.000712426	0.000142485	0	0.002422249	0	0.007337989	0	1.44505E-08	5.86542E-07	6.00993E-07	0.6009929
397766.283768477.2	397766.28	3768477	0.000569827	0	0.00062163	0.000518025	0.000103605	0	0.001761285	0	0.005335657	0	1.05073E-08	4.26491E-07	4.36999E-07	0.4369988
397866.283768477.2	397866.28	3768477	0.000407073	0	0.00044408	0.000370066	7.40133E-05	0	0.001258226	0	0.003811684	0	7.50623E-09	3.04677E-07	3.12183E-07	0.312183
396166.283768577.2	396166.28	3768577	5.72821E-05	0	6.24896E-05	5.20747E-05	1.04149E-05	0	0.000177054	0	0.000536369	0	1.05625E-09	4.28732E-08	4.39295E-08	0.0439295
396266.283768577.2	396266.28	3768577	6.01511E-05	0	6.56194E-05	5.46828E-05	1.09366E-05	0	0.000185922	0	0.000563233	0	1.10916E-09	4.50205E-08	4.61297E-08	0.0461297
396366.283768577.2	396366.28	3768577	6.93816E-05	0	7.56891E-05	6.30742E-05	1.26148E-05	0	0.000214452	0	0.000649664	0	1.27936E-09	5.19292E-08	5.32085E-08	0.0532085
396466.283768577.2	396466.28	3768577	8.84803E-05	0	9.6524E-05	8.04366E-05	1.60873E-05	0	0.000273485	0	0.000828497	0	1.63153E-09	6.62237E-08	6.78552E-08	0.0678552
396566.283768577.2	396566.28	3768577	0.00010428	0	0.00011376	9.48003E-05	1.89601E-05	0	0.000322321	0	0.000976443	0	1.92288E-09	7.80494E-08	7.99722E-08	0.0799722
396866.283768577.2	396866.28	3768577	0.000200092	0	0.000218283	0.000181902	3.63804E-05	0	0.000618467	0	0.001873593	0	3.68961E-09	1.49761E-07	1.5345E-07	0.1534502
396966.283768577.2	396966.28	3768577	0.000260535	0	0.000284219	0.00023685	4.73699E-05	0	0.000805289	0	0.002439551	0	4.80413E-09	1.94999E-07	1.99803E-07	0.1998031
397066.283768577.2	397066.28	3768577	0.000345494	0	0.000376903	0.000314086	6.28172E-05	0	0.001067892	0	0.003235085	0	6.37075E-09	2.58588E-07	2.64959E-07	0.2649585
397166.283768577.2	397166.28	3768577	0.000471077	0	0.000513902	0.000428252	8.56504E-05	0	0.001456057	0	0.004410995	0	8.68644E-09	3.52581E-07	3.61267E-07	0.3612675
397266.283768577.2	397266.28	3768577	0.000628094	0	0.000685193	0.000570994	0.000114199	0	0.00194138	0	0.00588124	0	1.15817E-08	4.70101E-07	4.81683E-07	0.4816829
397366.283768577.2	397366.28	3768577	0.00077308	0	0.00084336	0.0007028	0.00014056	0	0.00238952	0	0.007238839	0	1.42552E-08	5.78617E-07	5.92872E-07	0.5928724
397466.283768577.2	397466.28	3768577	0.00079168	0	0.00086365	0.000719709	0.000143942	0	0.00244701	0	0.007413	0	1.45982E-08	5.92538E-07	6.07136E-07	0.6071364
397566.283768577.2	397566.28	3768577	0.000739096	0	0.000806286	0.000671905	0.000134381	0	0.002284478	0	0.006920625	0	1.36286E-08	5.53182E-07	5.6681E-07	0.5668102
397666.283768577.2	397666.28	3768577	0.000605807	0	0.000660881	0.000550734	0.000110147	0	0.001872495	0	0.005672559	0	1.11708E-08	4.53421E-07	4.64592E-07	0.4645915
397766.283768577.2	397766.28	3768577	0.000467002	0	0.000509457	0.000424548	8.49095E-05	0	0.001443462	0	0.004372841	0	8.6113E-09	3.49531E-07	3.58143E-07	0.3581426
397866.283768577.2	397866.28	3768577	0.000359271	0	0.000391932	0.00032661	6.5322E-05	0	0.001110474	0	0.003364083	0	6.62478E-09	2.68899E-07	2.75524E-07	0.2755237
396166.283768677.2	396166.28	3768677	5.43993E-05	0	5.93447E-05	4.94539E-05	9.89078E-06	0	0.000168143	0	0.000509375	0	1.0031E-09	4.07155E-08	4.17186E-08	0.0417186
396266.283768677.2	396266.28	3768677	6.17588E-05	0	6.73732E-05	5.61444E-05	1.12289E-05	0	0.000190891	0	0.000578287	0	1.1388E-09	4.62238E-08	4.73626E-08	0.0473626
396366.283768677.2	396366.28	3768677	6.62078E-05	0	7.22266E-05	6.01889E-05	1.20378E-05	0	0.000204642	0	0.000619945	0	1.22084E-09	4.95537E-08	5.07745E-08	0.0507745

Garvey Reservoir Rehab - Unmitigated Standby Generator			Demolition - 2025	Demolition - 2026	ite Preparation - 202	te Preparation - 202	Grading - 2025	Grading - 2026	nfrastructure - 202	nfrastructure - 202	Paving - 2025	itectural Coating -	Child Risk			
Unique Identifier	X (UTM)	Y (UTM)	2025	1900	2025	2026	2026	1900	2026	1900	2026	1900	3rd Trimester	0<2	Total	per million
396466.283768677.2	396466.28	3768677	8.16613E-05	0	8.90851E-05	7.42376E-05	1.48475E-05	0	0.000252408	0	0.000764647	0	1.5058E-09	6.112E-08	6.26258E-08	0.0626258
396566.283768677.2	396566.28	3768677	9.5715E-05	0	0.000104416	8.70137E-05	1.74027E-05	0	0.000295847	0	0.000896241	0	1.76494E-09	7.16386E-08	7.34036E-08	0.0734036
396666.283768677.2	396666.28	3768677	0.000113816	0	0.000124163	0.000103469	2.06938E-05	0	0.000351794	0	0.00106573	0	2.09871E-09	8.51863E-08	8.7285E-08	0.087285
396766.283768677.2	396766.28	3768677	0.000137447	0	0.000149942	0.000124951	2.49903E-05	0	0.000424835	0	0.001287	0	2.53445E-09	1.02873E-07	1.05407E-07	0.1054073
396866.283768677.2	396866.28	3768677	0.000169532	0	0.000184944	0.00015412	3.0824E-05	0	0.000524007	0	0.001587434	0	3.12608E-09	1.26887E-07	1.30013E-07	0.1300134
396966.283768677.2	396966.28	3768677	0.000212635	0	0.000231966	0.000193305	3.8661E-05	0	0.000657237	0	0.001991041	0	3.9209E-09	1.59149E-07	1.63069E-07	0.1630694
397066.283768677.2	397066.28	3768677	0.000270624	0	0.000295227	0.000246022	4.92044E-05	0	0.000836475	0	0.002534028	0	4.99018E-09	2.02551E-07	2.07541E-07	0.2075409
397166.283768677.2	397166.28	3768677	0.000343873	0	0.000375134	0.000312612	6.25223E-05	0	0.00106288	0	0.003219901	0	6.34085E-09	2.57374E-07	2.63715E-07	0.263715
397366.283768677.2	397366.28	3768677	0.000518048	0	0.000565143	0.000470952	9.41905E-05	0	0.001601238	0	0.00485081	0	9.55255E-09	3.87736E-07	3.97289E-07	0.397289
397466.283768677.2	397466.28	3768677	0.000553723	0	0.000604061	0.000503384	0.000100677	0	0.001711506	0	0.005184856	0	1.02104E-08	4.14438E-07	4.24648E-07	0.4246479
397566.283768677.2	397566.28	3768677	0.000529537	0	0.000577677	0.000481398	9.62795E-05	0	0.001636752	0	0.004958395	0	9.76441E-09	3.96336E-07	4.061E-07	0.4061004
397666.283768677.2	397666.28	3768677	0.000464161	0	0.000506358	0.000421965	8.43929E-05	0	0.00143468	0	0.004346236	0	8.55891E-09	3.47405E-07	3.55964E-07	0.3559636
397766.283768677.2	397766.28	3768677	0.000382223	0	0.00041697	0.000347475	6.9495E-05	0	0.001181415	0	0.003578994	0	7.048E-09	2.86077E-07	2.93125E-07	0.2931253
397866.283768677.2	397866.28	3768677	0.000309584	0	0.000337728	0.00028144	5.6288E-05	0	0.000956896	0	0.002898832	0	5.70858E-09	2.3171E-07	2.37419E-07	0.2374189
396166.283768777.2	396166.28	3768777	5.17244E-05	0	5.64266E-05	4.70222E-05	9.40443E-06	0	0.000159875	0	0.000484328	0	9.53773E-10	3.87135E-08	3.96673E-08	0.0396673
396266.283768777.2	396266.28	3768777	5.7989E-05	0	6.32607E-05	5.27172E-05	1.05434E-05	0	0.000179239	0	0.000542988	0	1.06929E-09	4.34023E-08	4.44715E-08	0.0444715
396366.283768777.2	396366.28	3768777	6.3117E-05	0	6.8855E-05	5.73791E-05	1.14758E-05	0	0.000195089	0	0.000591005	0	1.16385E-09	4.72404E-08	4.84043E-08	0.0484043
396466.283768777.2	396466.28	3768777	7.5272E-05	0	8.21149E-05	6.84291E-05	1.36858E-05	0	0.000232659	0	0.00070482	0	1.38798E-09	5.63379E-08	5.77258E-08	0.0577258
396566.283768777.2	396566.28	3768777	8.66647E-05	0	9.45433E-05	7.87861E-05	1.57572E-05	0	0.000267873	0	0.000811496	0	1.59805E-09	6.48648E-08	6.64628E-08	0.0664628
396666.283768777.2	396666.28	3768777	0.00010137	0	0.000110585	9.21544E-05	1.84309E-05	0	0.000313325	0	0.00094919	0	1.86921E-09	7.5871E-08	7.77402E-08	0.0777402
396766.283768777.2	396766.28	3768777	0.000120455	0	0.000131405	0.000109504	2.19008E-05	0	0.000372314	0	0.001127893	0	2.22113E-09	9.01551E-08	9.23762E-08	0.0923762
396866.283768777.2	396866.28	3768777	0.000145069	0	0.000158258	0.000131881	2.63763E-05	0	0.000448396	0	0.001358377	0	2.67501E-09	1.08578E-07	1.11253E-07	0.1112533
396966.283768777.2	396966.28	3768777	0.000176171	0	0.000192186	0.000160155	3.2031E-05	0	0.000544527	0	0.001649597	0	3.2485E-09	1.31856E-07	1.35105E-07	0.1351046
397066.283768777.2	397066.28	3768777	0.00021538	0	0.00023496	0.0001958	3.91599E-05	0	0.000665719	0	0.002016737	0	3.9715E-09	1.61202E-07	1.65174E-07	0.1651739
397166.283768777.2	397166.28	3768777	0.000261823	0	0.000285626	0.000238021	4.76043E-05	0	0.000809273	0	0.00245162	0	4.8279E-09	1.95964E-07	2.00792E-07	0.2007916
397266.283768777.2	397266.28	3768777	0.000318385	0	0.000347329	0.000289441	5.78882E-05	0	0.000984099	0	0.00298124	0	5.87086E-09	2.38297E-07	2.44168E-07	0.2441683
397366.283768777.2	397366.28	3768777	0.000367448	0	0.000400853	0.000334044	6.68088E-05	0	0.001135749	0	0.003440652	0	6.77557E-09	2.75019E-07	2.81795E-07	0.2817948
397466.283768777.2	397466.28	3768777	0.000393061	0	0.000428794	0.000357328	7.14656E-05	0	0.001214916	0	0.00368048	0	7.24785E-09	2.94189E-07	3.01437E-07	0.3014371
397566.283768777.2	397566.28	3768777	0.000387656	0	0.000422897	0.000352414	7.04828E-05	0	0.001198208	0	0.003629867	0	7.14818E-09	2.90144E-07	2.97292E-07	0.2972918
397666.283768777.2	397666.28	3768777	0.00035546	0	0.000387774	0.000323145	6.4629E-05	0	0.001098693	0	0.003328394	0	6.5545E-09	2.66046E-07	2.72601E-07	0.2726008
397766.283768777.2	397766.28	3768777	0.000308669	0	0.00033673	0.000280608	5.61217E-05	0	0.000954069	0	0.002890267	0	5.69171E-09	2.31026E-07	2.36717E-07	0.2367174
397866.283768777.2	397866.28	3768777	0.000261588	0	0.000285369	0.000237807	4.75614E-05	0	0.000808544	0	0.002449414	0	4.82355E-09	1.95787E-07	2.00611E-07	0.2006109
396166.283768877.2	396166.28	3768877	4.86337E-05	0	5.30549E-05	4.42124E-05	8.84249E-06	0	0.000150322	0	0.000455388	0	8.96781E-10	3.64002E-08	3.7297E-08	0.037297
396266.283768877.2	396266.28	3768877	5.44547E-05	0	5.94052E-05	4.95043E-05	9.90086E-06	0	0.000168315	0	0.000509894	0	1.00412E-09	4.0757E-08	4.17612E-08	0.0417612
396366.283768877.2	396366.28	3768877	6.09134E-05	0	6.64509E-05	5.53758E-05	1.10752E-05	0	0.000188278	0	0.000570371	0	1.12321E-09	4.5591E-08	4.67142E-08	0.0467142
396466.283768877.2	396466.28	3768877	6.94093E-05	0	7.57193E-05	6.30994E-05	1.26199E-05	0	0.000214538	0	0.000649924	0	1.27988E-09	5.19499E-08	5.32298E-08	0.0532298
396566.283768877.2	396566.28	3768877	7.91527E-05	0	8.63484E-05	7.1957E-05	1.43914E-05	0	0.000244654	0	0.000741157	0	1.45954E-09	5.92424E-08	6.0702E-08	0.060702
396666.283768877.2	396666.28	3768877	9.09889E-05	0	9.92606E-05	8.27172E-05	1.65434E-05	0	0.000281238	0	0.000851987	0	1.67779E-09	6.81013E-08	6.97791E-08	0.0697791
396766.283768877.2	396766.28	3768877	0.00010647	0	0.000116149	9.67911E-05	1.93582E-05	0	0.00032909	0	0.000996948	0	1.96326E-09	7.96884E-08	8.16516E-08	0.0816516
396866.283768877.2	396866.28	3768877	0.000127038	0	0.000138587	0.000115489	2.30978E-05	0	0.000392663	0	0.001189537	0	2.34252E-09	9.50825E-08	9.7425E-08	0.097425
396966.283768877.2	396966.28	3768877	0.000150087	0	0.000163731	0.000136442	2.72885E-05	0	0.000463904	0	0.001405357	0	2.76753E-09	1.12333E-07	1.15101E-07	0.1151009
397066.283768877.2	397066.28	3768877	0.000176115	0	0.000192126	0.000160105	3.20209E-05	0	0.000544356	0	0.001649078	0	3.24748E-09	1.31815E-07	1.35062E-07	0.1350621
397166.283768877.2	397166.28	3768877	0.000207327	0	0.000226175	0.000188479	3.76958E-05	0	0.000640829	0	0.001941336	0	3.82301E-09	1.55175E-07	1.58999E-07	0.1589985
397266.283768877.2	397266.28	3768877	0.000243196	0	0.000265305	0.000221087	4.42175E-05	0	0.000751697	0	0.002277199	0	4.48442E-09	1.82022E-07	1.86506E-07	0.1865062
397366.283768877.2	397366.28	3768877	0.00027341	0	0.000298266	0.000248555	4.97109E-05	0	0.000845086	0	0.002560114	0	5.04155E-09	2.04636E-07	2.09677E-07	0.2096774
397466.283768877.2	397466.28	3768877	0.000292897	0	0.000319524	0.00026627	5.3254E-05	0	0.000905318	0	0.00274258	0	5.40088E-09	2.19221E-07	2.24622E-07	0.2246217
397566.283768877.2	397566.28	3768877	0.00029481	0	0.00032161	0.000268009	5.36017E-05	0	0.00091123	0	0.00276049	0	5.43615E-09	2.20652E-07	2.26088E-07	0.2260885
397666.283768877.2	397666.28	3768877	0.000277138	0	0.000302333	0.000251944	5.03888E-05	0	0.00085661	0	0.002595024	0	5.1103E-09	2.07426E-07	2.12537E-07	0.2125365
397766.283768877.2	397766.28	3768877	0.000249863	0	0.000272577	0.000227148	4.54296E-05	0	0.000772302	0	0.002339622	0	4.60735E-09	1.87011E-07	1.91619E-07	0.1916188
397866.283768877.2	397866.28	3768877	0.000220161	0	0.000240176	0.000200147	4.00293E-05	0	0.000680498	0	0.00206151	0	4.05967E-09	1.64781E-07	1.68841E-07	0.1688409
3964253767739	396425	3767739	9.63803E-05	0	0.000105142	8.76185E-05	1.75237E-05	0	0.000297903	0	0.00090247	0	1.77721E-09	7.21365E-08	7.39137E-08	0.0739137
3964753767739	396475	3767739	0.000105708	0	0.000115318	9.60981E-05	1.92196E-05	0	0.000326733	0	0.00098981	0	1.9492E-09	7.91178E-08	8.1067E-08	0.081067
3965253767739	396525	3767739	0.000115521	0	0.000126022	0.000105019	2.10037E-05	0	0.000357064	0	0.001081692	0	2.13014E-09	8.64622E-08	8.85923E-08	0.0885923
3965753767739	396575	3767739	0.000128077	0	0.000139721	0.000116434	2.32868E-05	0	0.000395876	0	0.001199271	0	2.36169E-09	9.58605E-08	9.82222E-08	0.0982222
3966253767739	396625	3767739	0.000139484	0	0.000152164	0.000126804	2.53607E-05	0	0.000431132	0	0.001306077	0	2.57202E-09	1.04398E-07	1.0697E-07	0.1069698
3966753767739	396675	3767739	0.000155741	0	0.0001699	0.000141583	2.83166E-05	0	0.000481382	0	0.001458306	0	2.8718E-09	1.16566E-07	1.19438E-07	0.1194375
3967253767739	396725	3767739	0.000179137	0	0.000195422	0.000162851	3.25703E-05	0	0.000553695	0	0.00167737	0	3.30319E-09	1.34076E-07	1.37379E-07	0.1373792
3967753767739	396775	3767739	0.000201173	0	0.000219462	0.000182885	3.6577E-05	0	0.000621809	0	0.001883715	0	3.70954E-09	1.5057E-07	1.54279E-07	0.1542793
3968253767739	396825	3767739	0.000232233	0	0.000253345	0.000211121	4.22242E-05	0	0.000717811	0	0.002174546	0	4.28227E-09	1.73816E-07	1.78099E-07	0.1780987
3968753767739	396875	3767739	0.000268545	0	0.000292959	0.000244132	4.88264E-05	0	0.00083005	0	0.002514562	0	4.95185E-09	2.00995E-07	2.05947E-07	0.2059466
3969253767739	396925	3767739	0.000307838	0	0.000335823	0.000279852	5.59705E-05	0	0.000951498	0	0.00288248	0	5.67638E-09	2.30403E-07	2.3608E-07	0.2360797
3969753767739	396975	3767739	0.000351607	0	0.000383571	0.000319642	6.39285E-05	0	0.001086784	0	0.003292316	0	6.48346E-09	2.63162E-07	2.69646E-07	0.2696459
3970253767739	397025	3767739	0.000397967	0	0.000434146	0.000361788	7.23577E-05	0	0.001230081	0	0.003726421	0	7.33833E-09	2.97861E-07	3.052E-07	0.3051998
3970753767739	397075	3767739	0.000443455	0	0.000483769	0.000403141	8.06281E-05	0	0.001370678	0	0.004152349	0	8.17709E-09	3.31907E-07	3.40084E-07	0.340084
3971253767739	397125	3767739	0.000486129	0	0.000530322	0.000441935	8.83871E-05	0	0.00150258	0	0.004551933	0	8.96398E-09	3.63847E-07	3.72811E-07	0.3728105
3971753767739	397175	3767739	0.000525158	0	0.000572899	0.000477416	9.54832E-05	0	0.001623215	0	0.004917386	0	9.68366E-09	3.93058E-07	4.02742E-07	0.4027417
3972253767739	397225	3767739	0.000554291	0	0.000604681	0.000503901	0.00010078	0	0.001713262	0	0.005190177	0	1.02209E-08	4.14863E-07	4.25084E-07	0.4250837
3972753767739	397275	3767739	0.000574595	0	0.000626831	0.000522359	0.000104472	0	0.001776022	0	0.005380301	0	1.05953E-08	4.3006E-07	4.40655E-07	0.4406551
3973253767739	397325	3767739	0.000569855	0	0.00062166	0.00051805	0.00010361	0	0.001761371	0	0.005335917	0	1.05079E-08	4.26512E-07	4.3702E-07	0.43702

Garvey Reservoir Rehab - Unmitigated Standby Generator			Demolition - 2025	Demolition - 2026	ite Preparation - 202	te Preparation - 202	Grading - 2025	Grading - 2026	nfrastructure - 202	nfrastructure - 202	Paving - 2025	itectural Coating -	Child Risk			
Unique Identifier	X (UTM)	Y (UTM)	2025	1900	2025	2026	2026	1900	2026	1900	2026	1900	3rd Trimester	0<2	Total	per million
3973753767739	397375	3767739	0.000549329	0	0.000599268	0.00049939	9.9878E-05	0	0.001697926	0	0.005143717	0	1.01294E-08	4.11149E-07	4.21279E-07	0.4212786
3974253767739	397425	3767739	0.000520653	0	0.000567985	0.000473321	9.46642E-05	0	0.001609292	0	0.004875208	0	9.6006E-09	3.89687E-07	3.99287E-07	0.3992873
3974753767739	397475	3767739	0.000488998	0	0.000533452	0.000444543	8.89087E-05	0	0.001511448	0	0.004578797	0	9.01688E-09	3.65994E-07	3.75011E-07	0.3750107
3975253767739	397525	3767739	0.000443441	0	0.000483754	0.000403128	8.06256E-05	0	0.001370636	0	0.00415222	0	8.17684E-09	3.31897E-07	3.40073E-07	0.3400734
3964253767789	396425	3767789	9.83207E-05	0	0.000107259	8.93824E-05	1.78765E-05	0	0.0003039	0	0.000920639	0	1.81299E-09	7.35888E-08	7.54018E-08	0.0754018
3964753767789	396475	3767789	0.000107634	0	0.000117419	9.78494E-05	1.95699E-05	0	0.000332688	0	0.001007849	0	1.98473E-09	8.05597E-08	8.25444E-08	0.0825444
3965253767789	396525	3767789	0.000117932	0	0.000128653	0.000107211	2.14422E-05	0	0.000364518	0	0.001104274	0	2.17461E-09	8.82672E-08	9.04418E-08	0.0904418
3965753767789	396575	3767789	0.000129782	0	0.000141581	0.000117984	2.35968E-05	0	0.000401145	0	0.001215233	0	2.39312E-09	9.71364E-08	9.95295E-08	0.0995295
3966253767789	396625	3767789	0.000144806	0	0.00015797	0.000131642	2.63284E-05	0	0.000447582	0	0.001355912	0	2.67015E-09	1.08381E-07	1.11051E-07	0.1110513
3966753767789	396675	3767789	0.000163849	0	0.000178745	0.000148954	2.97908E-05	0	0.000506443	0	0.001534225	0	3.0213E-09	1.22634E-07	1.25655E-07	0.1256555
3967253767789	396725	3767789	0.000189379	0	0.000206595	0.000172163	3.44325E-05	0	0.000585353	0	0.001773275	0	3.49206E-09	1.41742E-07	1.45234E-07	0.145234
3967753767789	396775	3767789	0.000216849	0	0.000236562	0.000197135	3.94271E-05	0	0.00067026	0	0.002030493	0	3.99859E-09	1.62302E-07	1.66301E-07	0.1663006
3968253767789	396825	3767789	0.000252385	0	0.000275329	0.000229441	4.58882E-05	0	0.000780099	0	0.002363242	0	4.65386E-09	1.88899E-07	1.93553E-07	0.1935532
3968753767789	396875	3767789	0.000294574	0	0.000321353	0.000267794	5.35589E-05	0	0.000910501	0	0.002758283	0	5.4318E-09	2.20476E-07	2.25908E-07	0.2259078
3969253767789	396925	3767789	0.000344386	0	0.000375693	0.000313078	6.26156E-05	0	0.001064465	0	0.003224702	0	6.35031E-09	2.57758E-07	2.64108E-07	0.2641082
3969753767789	396975	3767789	0.000403941	0	0.000440663	0.000367219	7.34438E-05	0	0.001248544	0	0.003782355	0	7.44847E-09	3.02332E-07	3.09781E-07	0.3097808
3970253767789	397025	3767789	0.000471188	0	0.000514023	0.000428353	8.56706E-05	0	0.001456399	0	0.004412033	0	8.68848E-09	3.52664E-07	3.61353E-07	0.3613525
3970753767789	397075	3767789	0.000543217	0	0.0005926	0.000493834	9.87667E-05	0	0.001679034	0	0.005086485	0	1.00167E-08	4.06575E-07	4.16591E-07	0.4165912
3971253767789	397125	3767789	0.000615357	0	0.000671298	0.000559415	0.000111883	0	0.001902011	0	0.005761975	0	1.13469E-08	4.60568E-07	4.71915E-07	0.4719149
3971753767789	397175	3767789	0.000683574	0	0.000745717	0.000621431	0.000124286	0	0.002112865	0	0.006400738	0	1.26048E-08	5.11626E-07	5.24231E-07	0.5242306
3972253767789	397225	3767789	0.000738334	0	0.000805455	0.000671212	0.000134242	0	0.002282122	0	0.006913488	0	1.36145E-08	5.52611E-07	5.66226E-07	0.5662256
3972753767789	397275	3767789	0.000780606	0	0.00085157	0.000709642	0.000141928	0	0.002412781	0	0.007309308	0	1.4394E-08	5.8425E-07	5.98644E-07	0.5986439
3973253767789	397325	3767789	0.000783544	0	0.000854775	0.000712313	0.000142463	0	0.002421863	0	0.007336821	0	1.44482E-08	5.86449E-07	6.00897E-07	0.6008972
3973753767789	397375	3767789	0.00075078	0	0.000819032	0.000682527	0.000136505	0	0.002320592	0	0.007030028	0	1.3844E-08	5.61926E-07	5.7577E-07	0.5757704
3974253767789	397425	3767789	0.000697545	0	0.000760958	0.000634131	0.000126826	0	0.002156047	0	0.006531554	0	1.28624E-08	5.22082E-07	5.34945E-07	0.5349446
3974753767789	397475	3767789	0.000639445	0	0.000697576	0.000581313	0.000116263	0	0.001976466	0	0.005987528	0	1.17911E-08	4.78597E-07	4.90388E-07	0.490388
3975253767789	397525	3767789	0.000563979	0	0.000615249	0.000512708	0.000102542	0	0.001743207	0	0.005280891	0	1.03995E-08	4.22114E-07	4.32513E-07	0.4325134
3964253767839	396425	3767839	9.99561E-05	0	0.000109043	9.08692E-05	1.81738E-05	0	0.000308955	0	0.000935953	0	1.84314E-09	7.48129E-08	7.6656E-08	0.076656
3964753767839	396475	3767839	0.000109963	0	0.000119959	9.99662E-05	1.99932E-05	0	0.000339885	0	0.001029652	0	2.02766E-09	8.23025E-08	8.43301E-08	0.0843301
3965253767839	396525	3767839	0.000119859	0	0.000130755	0.000108962	2.17925E-05	0	0.000370472	0	0.001122313	0	2.21014E-09	8.97091E-08	9.19192E-08	0.0919192
3965753767839	396575	3767839	0.000133316	0	0.000145436	0.000121197	2.42393E-05	0	0.000412069	0	0.001248326	0	2.45829E-09	9.97816E-08	1.0224E-07	0.1022399
3966253767839	396625	3767839	0.000149699	0	0.000163308	0.00013609	2.72179E-05	0	0.000462705	0	0.001401723	0	2.76037E-09	1.12043E-07	1.14803E-07	0.1148033
3966753767839	396675	3767839	0.000173454	0	0.000189223	0.000157686	3.15371E-05	0	0.000536131	0	0.001624161	0	3.19841E-09	1.29823E-07	1.33021E-07	0.1330213
3967253767839	396725	3767839	0.000199427	0	0.000217557	0.000181297	3.62595E-05	0	0.000616411	0	0.001867363	0	3.67734E-09	1.49263E-07	1.5294E-07	0.15294
3967753767839	396775	3767839	0.000230972	0	0.000251969	0.000209974	4.19949E-05	0	0.000713913	0	0.002162736	0	4.25901E-09	1.72872E-07	1.77132E-07	0.1771315
3968253767839	396825	3767839	0.000270583	0	0.000295181	0.000245984	4.91969E-05	0	0.000836347	0	0.002533639	0	4.98942E-09	2.0252E-07	2.07509E-07	0.2075091
3968753767839	396875	3767839	0.000320145	0	0.000349249	0.000291041	5.82082E-05	0	0.000989539	0	0.002997722	0	5.90332E-09	2.39615E-07	2.45518E-07	0.2455182
3969253767839	396925	3767839	0.000381779	0	0.000416486	0.000347072	6.94144E-05	0	0.001180045	0	0.003574841	0	7.03982E-09	2.85745E-07	2.92785E-07	0.2927851
3969753767839	396975	3767839	0.000459102	0	0.000500839	0.000417366	8.34732E-05	0	0.001419044	0	0.004298868	0	8.46563E-09	3.43618E-07	3.52084E-07	0.3520841
3970253767839	397025	3767839	0.000552933	0	0.000603199	0.000502666	0.000100533	0	0.001709064	0	0.005177459	0	1.01958E-08	4.13846E-07	4.24042E-07	0.4240421
3970753767839	397075	3767839	0.000663297	0	0.000723597	0.000602998	0.0001206	0	0.002050192	0	0.006210874	0	1.22309E-08	4.9645E-07	5.0868E-07	0.5086804
3971253767839	397125	3767839	0.00078195	0	0.000853036	0.000710864	0.000142173	0	0.002416937	0	0.007321896	0	1.44188E-08	5.85256E-07	5.99675E-07	0.5996749
3971753767839	397175	3767839	0.00091553	0	0.00099876	0.0008323	0.00016646	0	0.002829819	0	0.008572688	0	1.68819E-08	6.85235E-07	7.02117E-07	0.7021168
3972253767839	397225	3767839	0.001039671	0	0.001134187	0.000945156	0.000189031	0	0.003213529	0	0.009735102	0	1.9171E-08	7.78149E-07	7.9732E-07	0.7973203
3972753767839	397275	3767839	0.00111838	0	0.001220051	0.001016709	0.000203342	0	0.003456812	0	0.010472107	0	2.06224E-08	8.3706E-07	8.57682E-07	0.8576821
3973253767839	397325	3767839	0.001122802	0	0.001224874	0.001020729	0.000204146	0	0.003470478	0	0.010513506	0	2.07039E-08	8.40369E-07	8.61073E-07	0.8610727
3973753767839	397375	3767839	0.001088208	0	0.001187136	0.00098928	0.000197856	0	0.003363551	0	0.010189582	0	2.0066E-08	8.14477E-07	8.34543E-07	0.8345429
3974753767839	397475	3767839	0.000861131	0	0.000939415	0.000782846	0.000156569	0	0.002661676	0	0.008063313	0	1.58788E-08	6.44519E-07	6.60398E-07	0.6603981
3975253767839	397525	3767839	0.000722353	0	0.000788022	0.000656685	0.000131337	0	0.002232729	0	0.006763855	0	1.33198E-08	5.40651E-07	5.5397E-07	0.5539704
3964253767889	396425	3767889	0.000101162	0	0.000110358	9.19654E-05	1.83931E-05	0	0.000312682	0	0.000947243	0	1.86538E-09	7.57154E-08	7.75807E-08	0.0775807
3964753767889	396475	3767889	0.000110088	0	0.000120096	0.00010008	2.00159E-05	0	0.000340271	0	0.00103082	0	2.02996E-09	8.23958E-08	8.44258E-08	0.0844258
3965253767889	396525	3767889	0.000121979	0	0.000133068	0.00011089	2.2178E-05	0	0.000377027	0	0.001142169	0	2.24924E-09	9.12962E-08	9.35454E-08	0.0935454
3965753767889	396575	3767889	0.000137183	0	0.000149654	0.000124712	2.49424E-05	0	0.000424021	0	0.001284534	0	2.52959E-09	1.02676E-07	1.05205E-07	0.1052054
3974753767889	397475	3767889	0.001223811	0	0.001335067	0.001112555	0.000222511	0	0.003782689	0	0.011459321	0	2.25665E-08	9.1597E-07	9.38537E-07	0.9385366
3975253767889	397525	3767889	0.000931566	0	0.001016253	0.000846878	0.000169376	0	0.002879384	0	0.008722841	0	1.71776E-08	6.97237E-07	7.14414E-07	0.7144145
3964253767939	396425	3767939	0.000101993	0	0.000111266	9.27214E-05	1.85443E-05	0	0.000315253	0	0.00095503	0	1.88071E-09	7.63378E-08	7.82185E-08	0.0782185
3964753767939	396475	3767939	0.000111224	0	0.000121335	0.000101113	2.02226E-05	0	0.000343783	0	0.001041462	0	2.05092E-09	8.32464E-08	8.52973E-08	0.0852973
3965253767939	396525	3767939	0.000123892	0	0.000135155	0.000112629	2.25258E-05	0	0.000382938	0	0.001160078	0	2.28451E-09	9.27277E-08	9.50122E-08	0.0950122
3974753767939	397475	3767939	0.001661098	0	0.001812107	0.001510089	0.000302018	0	0.005134304	0	0.01555392	0	3.06299E-08	1.24326E-06	1.27389E-06	1.2738907
3975253767939	397525	3767939	0.001171297	0	0.001277778	0.001064815	0.000212963	0	0.003620371	0	0.010967596	0	2.15981E-08	8.76665E-07	8.98263E-07	0.8982635
3964253767989	396425	3767989	0.000101633	0	0.000110873	9.23938E-05	1.84788E-05	0	0.000314139	0	0.000951656	0	1.87407E-09	7.6068E-08	7.79421E-08	0.0779421
3964753767989	396475	3767989	0.000112097	0	0.000122288	0.000101907	2.03813E-05	0	0.000346482	0	0.001049637	0	2.06702E-09	8.39E-08	8.5967E-08	0.085967
3974753767989	397475	3767989	0.002259892	0	0.002465337	0.002054448	0.00041089	0	0.006985122	0	0.021160811	0	4.16713E-08	1.69143E-06	1.7331E-06	1.733104
3975253767989	397525	3767989	0.001499051	0	0.001635328	0.001362773	0.000272555	0	0.004633429	0	0.014036566	0	2.76418E-08	1.12198E-06	1.14962E-06	1.1496169
3964253768039	396425	3768039	0.000101758	0	0.000111009	9.25072E-05	1.85014E-05	0	0.000314524	0	0.000952824	0	1.87637E-09	7.61614E-08	7.80378E-08	0.0780378
3964753768039	396475	3768039	0.000112679	0	0.000122923	0.000102436	2.04871E-05	0	0.000348282	0	0.001055088	0	2.07775E-09	8.43356E-08	8.64134E-08	0.0864134
3974753768039	397475	3768039	0.003737946	0	0.004077759	0.003398132	0.000679626	0	0.01155365	0	0.035000765	0	6.89259E-08	2.79769E-06	2.86662E-06	2.866618
3975253768039	397525	3768039	0.002313114	0	0.002523397	0.002102831	0.000420566	0	0.007149624	0	0.021659156	0	4.26527E-08	1.73127E-06	1.77392E-06	1.7739191
3964253768089	396425	3768089	0.000101716	0	0.000110963	9.24694E-05	1.84939E-05	0	0.000314396	0	0.000952434	0	1.8756E-09	7.61303E-08	7.80059E-08	0.0780059

Garvey Reservoir Rehab - Unmitigated Standby Generator			Demolition - 2025	Demolition - 2026	ite Preparation - 202	te Preparation - 202	Grading - 2025	Grading - 2026	nfrastructure - 202	nfrastructure - 202	Paving - 2025	itectural Coating -	Child Risk			
Unique Identifier	X (UTM)	Y (UTM)	2025	1900	2025	2026	2026	1900	2026	1900	2026	1900	3rd Trimester	0<2	Total	per million
3964753768089	396475	3768089	0.000112832	0	0.000123089	0.000102574	2.05149E-05	0	0.000348753	0	0.001056516	0	2.08056E-09	8.44497E-08	8.65303E-08	0.0865303
3974753768089	397475	3768089	0.005457407	0	0.005953535	0.004961279	0.000992256	0	0.016868349	0	0.051101176	0	1.00632E-07	4.08464E-06	4.18527E-06	4.1852672
3975253768089	397525	3768089	0.002966889	0	0.0032366 07	0.002697172	0.000539434	0	0.009170385	0	0.027780873	0	5.4708E-08	2.22059E-06	2.2753E-06	2.2752975
3964253768139	396425	3768139	0.000101993	0	0.000111266	9.27214E-05	1.85443E-05	0	0.000315253	0	0.00095503	0	1.88071E-09	7.63378E-08	7.82185E-08	0.0782185
3964753768139	396475	3768139	0.000112111	0	0.000122303	0.000101919	2.03838E-05	0	0.000346525	0	0.001049767	0	2.06727E-09	8.39103E-08	8.59776E-08	0.0859776
3974253768139	397425	3768139	0.017831758	0	0.019452827	0.016210689	0.003242138	0	0.055116343	0	0.166970099	0	3.28809E-07	1.33463E-05	1.36751E-05	13.675115
3974753768139	397475	3768139	0.00690648	0	0.007534342	0.006278618	0.001255724	0	0.021347301	0	0.064669765	0	1.27352E-07	5.1692E-06	5.29656E-06	5.2965561
3975253768139	397525	3768139	0.003459934	0	0.003774474	0.003145395	0.000629079	0	0.010694342	0	0.032397565	0	6.37995E-08	2.58961E-06	2.65341E-06	2.6534119
3964253768189	396425	3768189	0.000100871	0	0.000110041	9.17008E-05	1.83402E-05	0	0.000311783	0	0.000944518	0	1.86001E-09	7.54975E-08	7.73575E-08	0.0773575
3964753768189	396475	3768189	0.000110919	0	0.000121003	0.000100836	2.01671E-05	0	0.000342841	0	0.001038606	0	2.0453E-09	8.30182E-08	8.50635E-08	0.0850635
3973753768189	397375	3768189	0.022116469	0	0.024127057	0.020105881	0.004021176	0	0.068359995	0	0.207090572	0	4.07817E-07	1.65532E-05	1.6961E-05	16.961046
3974253768189	397425	3768189	0.011720298	0	0.01278578	0.010654817	0.002130963	0	0.036226376	0	0.10974461	0	2.16117E-07	8.77214E-06	8.98826E-06	8.9882573
3974753768189	397475	3768189	0.006453711	0	0.007040412	0.00586701	0.001173402	0	0.019947835	0	0.060430206	0	1.19003E-07	4.83033E-06	4.94933E-06	4.9493295
3975253768189	397525	3768189	0.003591282	0	0.003917763	0.003264802	0.00065296	0	0.011100328	0	0.033627463	0	6.62215E-08	2.68792E-06	2.75414E-06	2.7541424
3964253768239	396425	3768239	9.9374E-05	0	0.000108408	9.034E-05	1.8068E-05	0	0.000307156	0	0.000930502	0	1.83241E-09	7.43772E-08	7.62096E-08	0.0762096
3964753768239	396475	3768239	0.000109256	0	0.000119188	9.93236E-05	1.98647E-05	0	0.0003377	0	0.001023033	0	2.01463E-09	8.17734E-08	8.3788E-08	0.083788
3973753768239	397375	3768239	0.009843987	0	0.010738894	0.008949079	0.001789816	0	0.030426868	0	0.092175511	0	1.81518E-07	7.3678E-06	7.54932E-06	7.5493202
3974253768239	397425	3768239	0.006806759	0	0.007425556	0.006187963	0.001237593	0	0.021039074	0	0.063736019	0	1.25513E-07	5.09457E-06	5.22008E-06	5.2200808
3974753768239	397475	3768239	0.004557317	0	0.004971619	0.004143015	0.000828603	0	0.014086253	0	0.042673059	0	8.40347E-08	3.41096E-06	3.49499E-06	3.4949911
3975253768239	397525	3768239	0.003024393	0	0.003299338	0.002749448	0.00054989	0	0.009348125	0	0.028319318	0	5.57684E-08	2.26363E-06	2.3194E-06	2.319397
3964253768289	396425	3768289	9.74337E-05	0	0.000106291	8.8576E-05	1.77152E-05	0	0.000301159	0	0.000912333	0	1.79663E-09	7.29249E-08	7.47215E-08	0.0747215
3964753768289	396475	3768289	0.000107191	0	0.000116936	9.74463E-05	1.94893E-05	0	0.000331317	0	0.001003696	0	1.97655E-09	8.02278E-08	8.22043E-08	0.0822043
3973253768289	397325	3768289	0.004743993	0	0.005175265	0.004312721	0.000862544	0	0.014663252	0	0.044421028	0	8.7477E-08	3.55068E-06	3.63815E-06	3.6381525
3973753768289	397375	3768289	0.005345989	0	0.005831988	0.00485999	0.000971998	0	0.016523966	0	0.050057898	0	9.85775E-08	4.00124E-06	4.09982E-06	4.0998211
3974253768289	397425	3768289	0.004902021	0	0.00534766	0.004456383	0.000891277	0	0.015151703	0	0.045900746	0	9.03909E-08	3.66895E-06	3.75934E-06	3.7593438
3974753768289	397475	3768289	0.003831305	0	0.004179605	0.003483004	0.000696601	0	0.011842214	0	0.035874943	0	7.06474E-08	2.86757E-06	2.93821E-06	2.9382147
3975253768289	397525	3768289	0.00275442	0	0.003004822	0.002504018	0.000500804	0	0.008513663	0	0.025791389	0	5.07902E-08	2.06157E-06	2.11236E-06	2.1123556
3964253768339	396425	3768339	9.55072E-05	0	0.00010419	8.68247E-05	1.73649E-05	0	0.000295204	0	0.000894294	0	1.76111E-09	7.1483E-08	7.32441E-08	0.0732441
3964753768339	396475	3768339	0.000104793	0	0.00011432	9.52665E-05	1.90533E-05	0	0.000323906	0	0.000981245	0	1.93234E-09	7.84332E-08	8.03655E-08	0.0803655
3965253768339	396525	3768339	0.000116214	0	0.000126778	0.000105649	2.11297E-05	0	0.000359205	0	0.001088181	0	2.14292E-09	8.69809E-08	8.91238E-08	0.0891238
3972753768339	397275	3768339	0.002349731	0	0.002563343	0.002136119	0.000427224	0	0.007262805	0	0.022002027	0	4.33279E-08	1.75867E-06	1.802E-06	1.8020008
3973253768339	397325	3768339	0.002965684	0	0.003235291	0.002696076	0.000539215	0	0.009166658	0	0.027769582	0	5.46858E-08	2.21969E-06	2.27437E-06	2.2743728
3973753768339	397375	3768339	0.003314518	0	0.003615838	0.003013198	0.00060264	0	0.010244874	0	0.031035943	0	6.11181E-08	2.48077E-06	2.54189E-06	2.5418929
3974253768339	397425	3768339	0.003231859	0	0.003525664	0.002938054	0.000587611	0	0.009989382	0	0.030261952	0	5.95939E-08	2.41891E-06	2.4785E-06	2.4785018
3974753768339	397475	3768339	0.002799215	0	0.003053689	0.002544741	0.000508948	0	0.008652118	0	0.026210829	0	5.16162E-08	2.09509E-06	2.14671E-06	2.1467084
3975253768339	397525	3768339	0.002247654	0	0.002451987	0.002043322	0.000408664	0	0.006947295	0	0.021046218	0	4.14457E-08	1.68227E-06	1.72372E-06	1.7237186
3964253768389	396425	3768389	9.31233E-05	0	0.000101589	8.46575E-05	1.69315E-05	0	0.000287836	0	0.000871973	0	1.71715E-09	6.96988E-08	7.14159E-08	0.0714159
3964753768389	396475	3768389	0.000102021	0	0.000111296	9.27466E-05	1.85493E-05	0	0.000315338	0	0.00095529	0	1.88122E-09	7.63585E-08	7.82397E-08	0.0782397
3965253768389	396525	3768389	0.000112721	0	0.000122968	0.000102474	2.04947E-05	0	0.00034841	0	0.001055477	0	2.07852E-09	8.43668E-08	8.64453E-08	0.0864453
3972253768389	397225	3768389	0.001317322	0	0.001437079	0.001197566	0.000239513	0	0.004071724	0	0.012334928	0	2.42908E-08	9.85959E-07	1.01025E-06	1.0102501
3972753768389	397275	3768389	0.001671909	0	0.001823901	0.001519917	0.000303983	0	0.005167718	0	0.015655146	0	3.08292E-08	1.25135E-06	1.28218E-06	1.2821812
3973253768389	397325	3768389	0.002019718	0	0.002203329	0.001836107	0.000367221	0	0.006242764	0	0.018911903	0	3.72426E-08	1.51167E-06	1.54891E-06	1.5489148
3973753768389	397375	3768389	0.002239935	0	0.002443565	0.002036304	0.000407261	0	0.006923434	0	0.020973932	0	4.13033E-08	1.67649E-06	1.7178E-06	1.7177983
3974253768389	397425	3768389	0.002245575	0	0.002449719	0.002041432	0.000408286	0	0.006940869	0	0.021026752	0	4.14073E-08	1.68072E-06	1.72212E-06	1.7221242
3974753768389	397475	3768389	0.002058691	0	0.002245845	0.001871538	0.000374308	0	0.006363228	0	0.019276837	0	3.79613E-08	1.54084E-06	1.5788E-06	1.5788034
3975253768389	397525	3768389	0.001762302	0	0.001922511	0.001602092	0.000320418	0	0.005447114	0	0.016501553	0	3.2496E-08	1.31901E-06	1.3515E-06	1.3515033
3964253768439	396425	3768439	9.07533E-05	0	9.90036E-05	8.2503E-05	1.65006E-05	0	0.00028051	0	0.000849781	0	1.67345E-09	6.79249E-08	6.95984E-08	0.0695984
3964753768439	396475	3768439	9.90275E-05	0	0.00010803	9.0025E-05	1.8005E-05	0	0.000306085	0	0.000927258	0	1.82602E-09	7.41179E-08	7.59439E-08	0.0759439
3965253768439	396525	3768439	0.000108937	0	0.000118841	9.90338E-05	1.98068E-05	0	0.000336715	0	0.001020048	0	2.00875E-09	8.15348E-08	8.35436E-08	0.0835436
3971753768439	397175	3768439	0.000808256	0	0.000881734	0.000734778	0.000146956	0	0.002498245	0	0.007568213	0	1.49038E-08	6.04945E-07	6.19849E-07	0.6198487
3972253768439	397225	3768439	0.001021279	0	0.001114123	0.000928436	0.000185687	0	0.003156681	0	0.009562888	0	1.88319E-08	7.64384E-07	7.83216E-07	0.7832157
3972753768439	397275	3768439	0.001245016	0	0.0013582	0.001131833	0.000226367	0	0.003848232	0	0.01165788	0	2.29575E-08	9.31841E-07	9.54799E-07	0.9547989
3973253768439	397325	3768439	0.001456224	0	0.001588608	0.00132384	0.000264768	0	0.004501057	0	0.013635554	0	2.68521E-08	1.08992E-06	1.11677E-06	1.1167735
3973753768439	397375	3768439	0.001609762	0	0.001756104	0.00146342	0.000292684	0	0.004975628	0	0.015073225	0	2.96832E-08	1.20484E-06	1.23452E-06	1.234521
3974253768439	397425	3768439	0.001649636	0	0.001799603	0.001499669	0.000299934	0	0.005098876	0	0.015446594	0	3.04185E-08	1.23468E-06	1.2651E-06	1.2651005
3974753768439	397475	3768439	0.001560962	0	0.001702868	0.001419056	0.000283811	0	0.004824791	0	0.01461628	0	2.87834E-08	1.16831E-06	1.1971E-06	1.1970965
3975253768439	397525	3768439	0.00139642	0	0.001523367	0.001269472	0.000253894	0	0.004316206	0	0.013075566	0	2.57493E-08	1.04516E-06	1.07091E-06	1.0709095
3964253768489	396425	3768489	8.79675E-05	0	9.59645E-05	7.99704E-05	1.59941E-05	0	0.000271899	0	0.000823696	0	1.62208E-09	6.58399E-08	6.7462E-08	0.067462
3964753768489	396475	3768489	9.57428E-05	0	0.000104447	8.70389E-05	1.74078E-05	0	0.000295932	0	0.0008965	0	1.76545E-09	7.16594E-08	7.34248E-08	0.0734248
3965253768489	396525	3768489	0.000104987	0	0.000114531	9.54429E-05	1.90886E-05	0	0.000324506	0	0.000983062	0	1.93591E-09	7.85784E-08	8.05143E-08	0.0805143
3970753768489	397075	3768489	0.00044911	0	0.000489938	0.000408281	8.16563E-05	0	0.001388157	0	0.004205298	0	8.28136E-09	3.36139E-07	3.44421E-07	0.3444206
3971253768489	397125	3768489	0.000540085	0	0.000589183	0.000490986	9.81972E-05	0	0.001669352	0	0.005057156	0	9.9589E-09	4.0423E-07	4.14189E-07	0.414189
3971753768489	397175	3768489	0.000658557	0	0.000718426	0.000598688	0.000119738	0	0.002035541	0	0.006166491	0	1.21435E-08	4.92902E-07	5.05045E-07	0.5050453
3972253768489	397225	3768489	0.000805262	0	0.000878468	0.000732056	0.000146411	0	0.002488992	0	0.007540182	0	1.48486E-08	6.02704E-07	6.17553E-07	0.6175528
3972753768489	397275	3768489	0.000960435	0	0.001047748	0.000873123	0.000174625	0	0.002968618	0	0.008993166	0	1.771E-08	7.18845E-07	7.36555E-07	0.7365546
3973253768489	397325	3768489	0.001099004	0	0.001198914	0.000999095	0.000199819	0	0.003396923	0	0.010290678	0	2.02651E-08	8.22558E-07	8.42823E-07	0.8428228
3973753768489	397375	3768489	0.001204324	0	0.001313808	0.00109484	0.000218968	0	0.003722457	0	0.011276855	0	2.22072E-08	9.01385E-07	9.23592E-07	0.9235923
3974253768489	397425	3768489	0.001244822	0	0.001357988	0.001131657	0.000226331	0	0.003847633	0	0.011656064	0	2.29539E-08	9.31696E-07	9.5465E-07	0.9546501
3974753768489	397475	3768489	0.001186722	0	0.001294606	0.001078839	0.000215768	0	0.003668051	0	0.011112038	0	2.18826E-08	8.88211E-07	9.10093E-07	0.9100935

Garvey Reservoir Rehab - Unmitigated Standby Generator			Demolition - 2025	Demolition - 2026	ite Preparation - 202	te Preparation - 202	Grading - 2025	Grading - 2026	nfrastructure - 202	nfrastructure - 202	Paving - 2025	itectural Coating -	Child Risk			
Unique Identifier	X (UTM)	Y (UTM)	2025	1900	2025	2026	2026	1900	2026	1900	2026	1900	3rd Trimester	0<2	Total	per million
3975253768489	397525	3768489	0.001121568	0	0.001223529	0.001019607	0.000203921	0	0.003466665	0	0.010501955	0	2.06812E-08	8.39446E-07	8.60127E-07	0.8601268
3964253768539	396425	3768539	8.50847E-05	0	9.28196E-05	7.73497E-05	1.54699E-05	0	0.000262989	0	0.000796702	0	1.56892E-09	6.36822E-08	6.52511E-08	0.0652511
3964753768539	396475	3768539	9.23887E-05	0	0.000100788	8.39897E-05	1.67979E-05	0	0.000285565	0	0.000865094	0	1.7036E-09	6.9149E-08	7.08526E-08	0.0708526
3965253768539	396525	3768539	0.000100871	0	0.000110041	9.17008E-05	1.83402E-05	0	0.000311783	0	0.000944518	0	1.86001E-09	7.54975E-08	7.73575E-08	0.0773575
3965753768539	396575	3768539	0.000110323	0	0.000120353	0.000100294	2.00588E-05	0	0.000340999	0	0.001033026	0	2.03431E-09	8.25722E-08	8.46065E-08	0.0846065
3970253768539	397025	3768539	0.0003337	0	0.000364036	0.000303364	6.06727E-05	0	0.001031436	0	0.003124644	0	6.15327E-09	2.4976E-07	2.55913E-07	0.2559133
3970753768539	397075	3768539	0.000391827	0	0.000427448	0.000356207	7.12413E-05	0	0.001211103	0	0.003668929	0	7.22511E-09	2.93266E-07	3.00491E-07	0.3004911
3971253768539	397125	3768539	0.00046168	0	0.000503651	0.000419709	8.39419E-05	0	0.001427012	0	0.004323006	0	8.51316E-09	3.45548E-07	3.54061E-07	0.3540611
3971753768539	397175	3768539	0.000549246	0	0.000599177	0.000499314	9.98629E-05	0	0.001697669	0	0.005142938	0	1.01278E-08	4.11087E-07	4.21215E-07	0.4212148
3972253768539	397225	3768539	0.000649632	0	0.000708689	0.000590574	0.000118115	0	0.002007952	0	0.006082914	0	1.19789E-08	4.86221E-07	4.982E-07	0.4982003
3972753768539	397275	3768539	0.000762089	0	0.00083137	0.000692808	0.000138562	0	0.002355548	0	0.007135926	0	1.40526E-08	5.70391E-07	5.84444E-07	0.5844436
3973253768539	397325	3768539	0.000857153	0	0.000935076	0.00077923	0.000155846	0	0.002649381	0	0.008026067	0	1.58055E-08	6.41542E-07	6.57348E-07	0.6573476
3973753768539	397375	3768539	0.000930083	0	0.001014635	0.00084553	0.000169106	0	0.002874801	0	0.008708954	0	1.71503E-08	6.96127E-07	7.13277E-07	0.7132772
3974253768539	397425	3768539	0.000966173	0	0.001054007	0.000878339	0.000175668	0	0.002986353	0	0.009046894	0	1.78158E-08	7.23139E-07	7.40955E-07	0.740955
3974753768539	397475	3768539	0.000935987	0	0.001021076	0.000850897	0.000170179	0	0.00289305	0	0.00876424	0	1.72591E-08	7.00546E-07	7.17805E-07	0.7178051
3975253768539	397525	3768539	0.000886036	0	0.000966585	0.000805488	0.000161098	0	0.002738658	0	0.008296523	0	1.63381E-08	6.6316E-07	6.79498E-07	0.6794983
3964253768589	396425	3768589	8.19801E-05	0	8.94328E-05	7.45274E-05	1.49055E-05	0	0.000253393	0	0.000767632	0	1.51167E-09	6.13586E-08	6.28703E-08	0.0628703
3964753768589	396475	3768589	8.89238E-05	0	9.70078E-05	8.08398E-05	1.6168E-05	0	0.000274855	0	0.00083265	0	1.63971E-09	6.65557E-08	6.81954E-08	0.0681954
3965253768589	396525	3768589	9.67961E-05	0	0.000105596	8.79965E-05	1.75993E-05	0	0.000299188	0	0.000906364	0	1.78487E-09	7.24477E-08	7.42326E-08	0.0742326
3965753768589	396575	3768589	0.000104613	0	0.000114123	9.51027E-05	1.90205E-05	0	0.000323349	0	0.000979558	0	1.92901E-09	7.82983E-08	8.02273E-08	0.0802273
3966253768589	396625	3768589	0.000114329	0	0.000124722	0.000103935	2.0787E-05	0	0.000353379	0	0.001070532	0	2.10816E-09	8.55701E-08	8.76782E-08	0.0876782
3968253768589	396825	3768589	0.000177626	0	0.000193774	0.000161478	3.22956E-05	0	0.000549025	0	0.001663224	0	3.27534E-09	1.32945E-07	1.36221E-07	0.1362207
3968753768589	396875	3768589	0.000200744	0	0.000218993	0.000182494	3.64989E-05	0	0.000620481	0	0.001879692	0	3.70162E-09	1.50248E-07	1.5395E-07	0.1539498
3969253768589	396925	3768589	0.000227022	0	0.00024766	0.000206383	4.12767E-05	0	0.000701704	0	0.00212575	0	4.18617E-09	1.69916E-07	1.74102E-07	0.1741023
3969753768589	396975	3768589	0.000260687	0	0.000284386	0.000236988	4.73976E-05	0	0.00080576	0	0.002440978	0	4.80694E-09	1.95113E-07	1.9992E-07	0.19992
3970253768589	397025	3768589	0.00029991	0	0.000327174	0.000272645	5.45291E-05	0	0.000926994	0	0.002808248	0	5.5302E-09	2.2447E-07	2.3E-07	0.2299999
3970753768589	397075	3768589	0.000344289	0	0.000375588	0.00031299	6.25979E-05	0	0.001064165	0	0.003223794	0	6.34852E-09	2.57685E-07	2.64034E-07	0.2640338
3971253768589	397125	3768589	0.000400822	0	0.000437261	0.000364384	7.28768E-05	0	0.001238905	0	0.003753155	0	7.39097E-09	2.99998E-07	3.07389E-07	0.3073893
3971753768589	397175	3768589	0.000465436	0	0.000507749	0.000423124	8.46248E-05	0	0.001438621	0	0.004358176	0	8.58242E-09	3.48359E-07	3.56942E-07	0.3569415
3972253768589	397225	3768589	0.00053637	0	0.000585131	0.000487609	9.75219E-05	0	0.001657871	0	0.005022375	0	9.89041E-09	4.0145E-07	4.1134E-07	0.4113405
3972753768589	397275	3768589	0.000611906	0	0.000667533	0.000556278	0.000111256	0	0.001891344	0	0.005729661	0	1.12832E-08	4.57985E-07	4.69268E-07	0.4692683
3973253768589	397325	3768589	0.000688162	0	0.000750722	0.000625601	0.00012512	0	0.002127045	0	0.006443695	0	1.26894E-08	5.15059E-07	5.27749E-07	0.5277488
3973753768589	397375	3768589	0.000742713	0	0.000810233	0.000675194	0.000135039	0	0.002295659	0	0.006954497	0	1.36953E-08	5.55889E-07	5.69584E-07	0.5695843
3974253768589	397425	3768589	0.0007571	0	0.000825927	0.000688272	0.000137654	0	0.002340126	0	0.007089206	0	1.39606E-08	5.66657E-07	5.80617E-07	0.5806172
3974753768589	397475	3768589	0.000750599	0	0.000818836	0.000682363	0.000136473	0	0.002320035	0	0.007028341	0	1.38407E-08	5.61792E-07	5.75632E-07	0.5756322
3975253768589	397525	3768589	0.00072403	0	0.000789851	0.000658209	0.000131642	0	0.002237912	0	0.006779558	0	1.33508E-08	5.41906E-07	5.55257E-07	0.5552565
3964253768639	396425	3768639	7.81271E-05	0	8.52296E-05	7.10246E-05	1.42049E-05	0	0.000241484	0	0.000731554	0	1.44063E-09	5.84748E-08	5.99154E-08	0.0599154
3964753768639	396475	3768639	8.54034E-05	0	9.31674E-05	7.76395E-05	1.55279E-05	0	0.000263974	0	0.000799687	0	1.5748E-09	6.39208E-08	6.54956E-08	0.0654956
3965253768639	396525	3768639	9.16542E-05	0	9.99864E-05	8.3322E-05	1.66644E-05	0	0.000283295	0	0.000858216	0	1.69006E-09	6.85992E-08	7.02893E-08	0.0702893
3965753768639	396575	3768639	9.98037E-05	0	0.000108877	9.07306E-05	1.81461E-05	0	0.000308484	0	0.000934525	0	1.84033E-09	7.46988E-08	7.65391E-08	0.0765391
3966253768639	396625	3768639	0.000109686	0	0.000119657	9.97142E-05	1.99428E-05	0	0.000339028	0	0.001027056	0	2.02255E-09	8.2095E-08	8.41175E-08	0.0841175
3966753768639	396675	3768639	0.000120898	0	0.000131889	0.000109907	2.19815E-05	0	0.000373685	0	0.001132046	0	2.2293E-09	9.04871E-08	9.27164E-08	0.0927164
3967253768639	396725	3768639	0.000133413	0	0.000145542	0.000121285	2.4257E-05	0	0.000412369	0	0.001249235	0	2.46008E-09	9.98542E-08	1.02314E-07	0.1023143
3967753768639	396775	3768639	0.000147925	0	0.000161372	0.000134477	2.68954E-05	0	0.000457221	0	0.001385111	0	2.72766E-09	1.10715E-07	1.13443E-07	0.1134428
3968253768639	396825	3768639	0.000164986	0	0.000179985	0.000149987	2.99974E-05	0	0.000509956	0	0.001544867	0	3.04226E-09	1.23485E-07	1.26527E-07	0.1265271
3968753768639	396875	3768639	0.000184722	0	0.000201515	0.000167929	3.35858E-05	0	0.000570959	0	0.00172967	0	3.40619E-09	1.38257E-07	1.41663E-07	0.1416627
3969253768639	396925	3768639	0.000207715	0	0.000226598	0.000188832	3.77664E-05	0	0.000642029	0	0.00194497	0	3.83017E-09	1.55466E-07	1.59296E-07	0.1592961
3969753768639	396975	3768639	0.000235546	0	0.000256959	0.000214132	4.28265E-05	0	0.00072805	0	0.002205562	0	4.34335E-09	1.76296E-07	1.80639E-07	0.1806391
3970253768639	397025	3768639	0.000267423	0	0.000291734	0.000243112	4.86223E-05	0	0.00082658	0	0.00250405	0	4.93115E-09	2.00155E-07	2.05086E-07	0.2050857
3970753768639	397075	3768639	0.000302696	0	0.000330214	0.000275178	5.50356E-05	0	0.000935605	0	0.002834333	0	5.58156E-09	2.26555E-07	2.32136E-07	0.2321363
3971253768639	397125	3768639	0.00034063	0	0.000371596	0.000309663	6.19327E-05	0	0.001052855	0	0.003189533	0	6.28105E-09	2.54947E-07	2.61228E-07	0.2612278
3971753768639	397175	3768639	0.000395043	0	0.000430956	0.00035913	7.1826E-05	0	0.001221042	0	0.003699038	0	7.2844E-09	2.95673E-07	3.02957E-07	0.3029571
3972253768639	397225	3768639	0.000449761	0	0.000490648	0.000408874	8.17747E-05	0	0.00139017	0	0.004211398	0	8.29338E-09	3.36627E-07	3.4492E-07	0.3449202
3972753768639	397275	3768639	0.000507708	0	0.000553864	0.000461553	9.23106E-05	0	0.00156928	0	0.004753996	0	9.3619E-09	3.79998E-07	3.8936E-07	0.3893598
3973253768639	397325	3768639	0.000563106	0	0.000614297	0.000511914	0.000102383	0	0.001740508	0	0.005272715	0	1.03834E-08	4.2146E-07	4.31844E-07	0.4318437
3973753768639	397375	3768639	0.000604879	0	0.000659868	0.00054989	0.000109978	0	0.001869625	0	0.005663864	0	1.11537E-08	4.52726E-07	4.63879E-07	0.4638794
3974253768639	397425	3768639	0.000630755	0	0.000688096	0.000573413	0.000114683	0	0.001949605	0	0.005906158	0	1.16308E-08	4.72093E-07	4.83724E-07	0.4837237
3974753768639	397475	3768639	0.000614969	0	0.000670875	0.000559062	0.000111812	0	0.001900812	0	0.005758341	0	1.13397E-08	4.60278E-07	4.71617E-07	0.4716173
3975253768639	397525	3768639	0.000602439	0	0.000657207	0.000547672	0.000109534	0	0.001862085	0	0.005641023	0	1.11087E-08	4.509E-07	4.62009E-07	0.4620087
3964253768689	396425	3768689	7.20288E-05	0	7.85769E-05	6.54808E-05	1.30962E-05	0	0.000222635	0	0.000674452	0	1.32818E-09	5.39105E-08	5.52387E-08	0.0552387
3964753768689	396475	3768689	8.19247E-05	0	8.93723E-05	7.4477E-05	1.48954E-05	0	0.000253222	0	0.000767113	0	1.51065E-09	6.13171E-08	6.28277E-08	0.0628277
3965253768689	396525	3768689	8.84664E-05	0	9.65088E-05	8.0424E-05	1.60848E-05	0	0.000273442	0	0.000828367	0	1.63128E-09	6.62133E-08	6.78446E-08	0.0678446
3965753768689	396575	3768689	9.59784E-05	0	0.000104704	8.72531E-05	1.74506E-05	0	0.00029666	0	0.000898707	0	1.7698E-09	7.18357E-08	7.36055E-08	0.0736055
3966253768689	396625	3768689	0.000104363	0	0.000113851	9.48759E-05	1.89752E-05	0	0.000322578	0	0.000977222	0	1.92441E-09	7.81116E-08	8.0036E-08	0.080036
3966753768689	396675	3768689	0.000114065	0	0.000124435	0.000103696	2.07391E-05	0	0.000352565	0	0.001068066	0	2.10331E-09	8.5373E-08	8.74763E-08	0.0874763
3967253768689	396725	3768689	0.000125001	0	0.000136364	0.000113637	2.27274E-05	0	0.000386365	0	0.00117046	0	2.30495E-09	9.35576E-08	9.58625E-08	0.0958625
3967753768689	396775	3768689	0.000137696	0	0.000150214	0.000125178	2.50356E-05	0	0.000425606	0	0.001289336	0	2.53905E-09	1.0306E-07	1.05599E-07	0.1055986
3968253768689	396825	3768689	0.000152401	0	0.000166256	0.000138547	2.77093E-05	0	0.000471058	0	0.001427029	0	2.8102E-09	1.14066E-07	1.16876E-07	0.116876
3968753768689	396875	3768689	0.000169698	0	0.000185125	0.000154271	3.08542E-05	0	0.000524521	0	0.001588991	0	3.12915E-09	1.27012E-07	1.30141E-07	0.1301409

Garvey Reservoir Rehab - Unmitigated Standby Generator			Demolition - 2025	Demolition - 2026	ite Preparation - 202	te Preparation - 202	Grading - 2025	Grading - 2026	nfrastructure - 202	nfrastructure - 202	Paving - 2025	itectural Coating -	Child Risk			
Unique Identifier	X (UTM)	Y (UTM)	2025	1900	2025	2026	2026	1900	2026	1900	2026	1900	3rd Trimester	0<2	Total	per million
3969253768689	396925	3768689	0.000189337	0	0.00020655	0.000172125	3.4425E-05	0	0.000585224	0	0.001772885	0	3.49129E-09	1.41711E-07	1.45202E-07	0.1452021
3969753768689	396975	3768689	0.000212081	0	0.000231361	0.000192801	3.85602E-05	0	0.000655523	0	0.00198585	0	3.91067E-09	1.58734E-07	1.62644E-07	0.1626442
3970253768689	397025	3768689	0.000238414	0	0.000260089	0.00021674	4.33481E-05	0	0.000736917	0	0.002232426	0	4.39625E-09	1.78443E-07	1.82839E-07	0.1828393
3970753768689	397075	3768689	0.000268934	0	0.000293382	0.000244485	4.8897E-05	0	0.000831249	0	0.002518196	0	4.959E-09	2.01285E-07	2.06244E-07	0.2062442
3971253768689	397125	3768689	0.000297983	0	0.000325073	0.000270894	5.41788E-05	0	0.00092104	0	0.002790208	0	5.49467E-09	2.23028E-07	2.28522E-07	0.2285225
3971753768689	397175	3768689	0.000339535	0	0.000370402	0.000308668	6.17336E-05	0	0.001049471	0	0.00317928	0	6.26086E-09	2.54127E-07	2.60388E-07	0.2603881
3972253768689	397225	3768689	0.00038347	0	0.000418331	0.000348609	6.97218E-05	0	0.001185271	0	0.003590674	0	7.071E-09	2.87011E-07	2.94082E-07	0.2940819
3972753768689	397275	3768689	0.000426685	0	0.000465474	0.000387895	7.7579E-05	0	0.001318843	0	0.003995319	0	7.86786E-09	3.19355E-07	3.27223E-07	0.327223
3973253768689	397325	3768689	0.000468153	0	0.000510712	0.000425593	8.51187E-05	0	0.001447018	0	0.004383612	0	8.63251E-09	3.50392E-07	3.59025E-07	0.3590248
3973753768689	397375	3768689	0.000501943	0	0.000547574	0.000456312	9.12623E-05	0	0.001551459	0	0.004700009	0	9.25558E-09	3.75683E-07	3.84938E-07	0.3849382
3974253768689	397425	3768689	0.000523716	0	0.000571327	0.000476106	9.52211E-05	0	0.001618759	0	0.004903889	0	9.65708E-09	3.91979E-07	4.01636E-07	0.4016363
3974753768689	397475	3768689	0.000531616	0	0.000579945	0.000483288	9.66575E-05	0	0.001643178	0	0.004977862	0	9.80275E-09	3.97892E-07	4.07695E-07	0.4076948
3975253768689	397525	3768689	0.00052513	0	0.000572869	0.000477391	9.54782E-05	0	0.001623129	0	0.004917126	0	9.68314E-09	3.93037E-07	4.0272E-07	0.4027204

Garvey Reservoir Rehab - Unmitigated Standby Generator

Offroad DPM Emissions, Ground Level Concentrations and Health Risk Calculations

Residential Receptors

Phase	Year	Emissions (lbs/day)	Meters	lbs/meter	meters (h1)	lbs/day (H1)	g/s (H1)	meters (h2)	lbs/day (H2)	g/s (H2)	hrs/day
Demolition - 2025	2025	0.0000	1932.1	0	691.2	0	0	1240.9	0	0	10.00
Demolition - 2026	1900		1932.1	0	691.2	0	0	1240.9	0	0	10.00
Site Preparation - 2025	2025	0.0000	1932.1	0	691.2	0	0	1240.9	0	0	10.00
Site Preparation - 2026	2026	0.0000	1932.1	0	691.2	0	0	1240.9	0	0	10.00
Grading - 2025	2026	0.0000	1932.1	0	691.2	0	0	1240.9	0	0	10.00
Grading - 2026	1900		1932.1	0	691.2	0	0	1240.9	0	0	10.00
Infrastructure - 2025	2026	0.0001	1932.1	6.52126E-08	691.2	4.50749E-05	5.67932E-07	1240.9	8.09223E-05	1.0196E-06	10.00
Infrastructure - 2026	1900		1932.1	0	691.2	0	0	1240.9	0	0	10.00
Paving - 2025	2026	0.0000	1932.1	0	691.2	0	0	1240.9	0	0	10.00
Architectural Coating - 2026	1900		1932.1	0	691.2	0	0	1240.9	0	0	10.00

		AERMOD Column Identifier:	*5*	*5*	*5*	*5*	*5*	*5*	*5*	*5*	*5*	*5*				
			6	*6*	*6*	*6*	*6*	*6*	*6*	*6*	*6*	*6*			*MAX:*	0.001422
Garvey Reservoir Rehab - Unmitigated Standby Generator			Demolition - 2025	Demolition - 2026	Site Preparation - 2025	te Preparation - 202	Grading - 2025	Grading - 2026	Infrastructure - 2025	nfrastructure - 2026	Paving - 2025	rchitectural Coating - 202	Child Risk			
Unique Identifier	X (UTM)	Y (UTM)	2025	1900	2025	2026	2026	1900	2026	1900	2026	1900	3rd Trimester	0<2	Total	per million
396166.283767377.2	396166.28	3767377	0	0	0	0	0	0	4.82584E-08	0	0	0	0	5.32037E-12	5.32037E-12	5.32E-06
396266.283767377.2	396266.28	3767377	0	0	0	0	0	0	4.93524E-08	0	0	0	0	5.44099E-12	5.44099E-12	5.441E-06
396366.283767377.2	396366.28	3767377	0	0	0	0	0	0	5.13596E-08	0	0	0	0	5.66228E-12	5.66228E-12	5.662E-06
396466.283767377.2	396466.28	3767377	0	0	0	0	0	0	5.26977E-08	0	0	0	0	5.80981E-12	5.80981E-12	5.81E-06
396566.283767377.2	396566.28	3767377	0	0	0	0	0	0	5.77712E-08	0	0	0	0	6.36914E-12	6.36914E-12	6.369E-06
396666.283767377.2	396666.28	3767377	0	0	0	0	0	0	5.46195E-08	0	0	0	0	6.02167E-12	6.02167E-12	6.022E-06
396766.283767377.2	396766.28	3767377	0	0	0	0	0	0	5.44053E-08	0	0	0	0	5.99805E-12	5.99805E-12	5.998E-06
396866.283767377.2	396866.28	3767377	0	0	0	0	0	0	5.44529E-08	0	0	0	0	6.00331E-12	6.00331E-12	6.003E-06
396966.283767377.2	396966.28	3767377	0	0	0	0	0	0	5.51734E-08	0	0	0	0	6.08274E-12	6.08274E-12	6.083E-06
397066.283767377.2	397066.28	3767377	0	0	0	0	0	0	5.3782E-08	0	0	0	0	5.92935E-12	5.92935E-12	5.929E-06
397166.283767377.2	397166.28	3767377	0	0	0	0	0	0	5.30464E-08	0	0	0	0	5.84824E-12	5.84824E-12	5.848E-06
397266.283767377.2	397266.28	3767377	0	0	0	0	0	0	5.31104E-08	0	0	0	0	5.85529E-12	5.85529E-12	5.855E-06
397366.283767377.2	397366.28	3767377	0	0	0	0	0	0	5.06893E-08	0	0	0	0	5.58838E-12	5.58838E-12	5.588E-06
397466.283767377.2	397466.28	3767377	0	0	0	0	0	0	4.56335E-08	0	0	0	0	5.03099E-12	5.03099E-12	5.031E-06
397566.283767377.2	397566.28	3767377	0	0	0	0	0	0	4.48866E-08	0	0	0	0	4.94864E-12	4.94864E-12	4.949E-06
397666.283767377.2	397666.28	3767377	0	0	0	0	0	0	4.3569E-08	0	0	0	0	4.80339E-12	4.80339E-12	4.803E-06
397766.283767377.2	397766.28	3767377	0	0	0	0	0	0	4.49648E-08	0	0	0	0	4.95727E-12	4.95727E-12	4.957E-06
397866.283767377.2	397866.28	3767377	0	0	0	0	0	0	4.28292E-08	0	0	0	0	4.72182E-12	4.72182E-12	4.722E-06
396166.283767477.2	396166.28	3767477	0	0	0	0	0	0	5.55344E-08	0	0	0	0	6.12254E-12	6.12254E-12	6.123E-06
396266.283767477.2	396266.28	3767477	0	0	0	0	0	0	5.4263E-08	0	0	0	0	5.98237E-12	5.98237E-12	5.982E-06
396366.283767477.2	396366.28	3767477	0	0	0	0	0	0	5.71677E-08	0	0	0	0	6.3026E-12	6.3026E-12	6.303E-06
396466.283767477.2	396466.28	3767477	0	0	0	0	0	0	6.26129E-08	0	0	0	0	6.90293E-12	6.90293E-12	6.903E-06
396566.283767477.2	396566.28	3767477	0	0	0	0	0	0	6.34637E-08	0	0	0	0	6.99673E-12	6.99673E-12	6.997E-06
396666.283767477.2	396666.28	3767477	0	0	0	0	0	0	6.1621E-08	0	0	0	0	6.79357E-12	6.79357E-12	6.794E-06
396766.283767477.2	396766.28	3767477	0	0	0	0	0	0	6.2103E-08	0	0	0	0	6.84671E-12	6.84671E-12	6.847E-06
396866.283767477.2	396866.28	3767477	0	0	0	0	0	0	6.24656E-08	0	0	0	0	6.88669E-12	6.88669E-12	6.887E-06
396966.283767477.2	396966.28	3767477	0	0	0	0	0	0	6.33955E-08	0	0	0	0	6.98921E-12	6.98921E-12	6.989E-06
397066.283767477.2	397066.28	3767477	0	0	0	0	0	0	6.21772E-08	0	0	0	0	6.85489E-12	6.85489E-12	6.855E-06
397166.283767477.2	397166.28	3767477	0	0	0	0	0	0	6.02189E-08	0	0	0	0	6.639E-12	6.639E-12	6.639E-06
397266.283767477.2	397266.28	3767477	0	0	0	0	0	0	6.04179E-08	0	0	0	0	6.66093E-12	6.66093E-12	6.661E-06
397366.283767477.2	397366.28	3767477	0	0	0	0	0	0	5.86004E-08	0	0	0	0	6.46056E-12	6.46056E-12	6.461E-06
397466.283767477.2	397466.28	3767477	0	0	0	0	0	0	5.28551E-08	0	0	0	0	5.82715E-12	5.82715E-12	5.827E-06
397566.283767477.2	397566.28	3767477	0	0	0	0	0	0	5.01255E-08	0	0	0	0	5.52622E-12	5.52622E-12	5.526E-06
397666.283767477.2	397666.28	3767477	0	0	0	0	0	0	4.90262E-08	0	0	0	0	5.40502E-12	5.40502E-12	5.405E-06
397766.283767477.2	397766.28	3767477	0	0	0	0	0	0	4.78618E-08	0	0	0	0	5.27665E-12	5.27665E-12	5.277E-06
397866.283767477.2	397866.28	3767477	0	0	0	0	0	0	4.60623E-08	0	0	0	0	5.07826E-12	5.07826E-12	5.078E-06
396166.283767577.2	396166.28	3767577	0	0	0	0	0	0	5.85404E-08	0	0	0	0	6.45395E-12	6.45395E-12	6.454E-06
396266.283767577.2	396266.28	3767577	0	0	0	0	0	0	6.01789E-08	0	0	0	0	6.63459E-12	6.63459E-12	6.635E-06
396366.283767577.2	396366.28	3767577	0	0	0	0	0	0	6.29392E-08	0	0	0	0	6.9389E-12	6.9389E-12	6.939E-06
396466.283767577.2	396466.28	3767577	0	0	0	0	0	0	6.68318E-08	0	0	0	0	7.36805E-12	7.36805E-12	7.368E-06
396566.283767577.2	396566.28	3767577	0	0	0	0	0	0	7.42387E-08	0	0	0	0	8.18465E-12	8.18465E-12	8.185E-06
396666.283767577.2	396666.28	3767577	0	0	0	0	0	0	7.53816E-08	0	0	0	0	8.31064E-12	8.31064E-12	8.311E-06
396766.283767577.2	396766.28	3767577	0	0	0	0	0	0	7.10828E-08	0	0	0	0	7.83671E-12	7.83671E-12	7.837E-06
396866.283767577.2	396866.28	3767577	0	0	0	0	0	0	7.2875E-08	0	0	0	0	8.0343E-12	8.0343E-12	8.034E-06

Garvey Reservoir Rehab - Unmitigated Standby Generator			Demolition - 2025	Demolition - 2026	Site Preparation - 2025	ite Preparation - 202	Grading - 2025	Grading - 2026	Infrastructure - 2025	nfrastructure - 2026	Paving - 2025	rchitectural Coating - 202	Child Risk			
Unique Identifier	X (UTM)	Y (UTM)	2025	1900	2025	2026	2026	1900	2026	1900	2026	1900	3rd Trimester	0<2	Total	per million
396966.283767577.2	396966.28	3767577	0	0	0	0	0	0	7.38717E-08	0	0	0	0	8.14418E-12	8.14418E-12	8.144E-06
397066.283767577.2	397066.28	3767577	0	0	0	0	0	0	7.38894E-08	0	0	0	0	8.14614E-12	8.14614E-12	8.146E-06
397166.283767577.2	397166.28	3767577	0	0	0	0	0	0	7.11631E-08	0	0	0	0	7.84557E-12	7.84557E-12	7.846E-06
397266.283767577.2	397266.28	3767577	0	0	0	0	0	0	7.02197E-08	0	0	0	0	7.74156E-12	7.74156E-12	7.742E-06
397366.283767577.2	397366.28	3767577	0	0	0	0	0	0	6.84696E-08	0	0	0	0	7.54862E-12	7.54862E-12	7.549E-06
397466.283767577.2	397466.28	3767577	0	0	0	0	0	0	6.09922E-08	0	0	0	0	6.72425E-12	6.72425E-12	6.724E-06
397566.283767577.2	397566.28	3767577	0	0	0	0	0	0	5.75304E-08	0	0	0	0	6.3426E-12	6.3426E-12	6.343E-06
397666.283767577.2	397666.28	3767577	0	0	0	0	0	0	5.44013E-08	0	0	0	0	5.99762E-12	5.99762E-12	5.998E-06
397766.283767577.2	397766.28	3767577	0	0	0	0	0	0	5.23333E-08	0	0	0	0	5.76963E-12	5.76963E-12	5.77E-06
397866.283767577.2	397866.28	3767577	0	0	0	0	0	0	4.97493E-08	0	0	0	0	5.48474E-12	5.48474E-12	5.485E-06
396166.283767677.2	396166.28	3767677	0	0	0	0	0	0	7.08796E-08	0	0	0	0	7.81431E-12	7.81431E-12	7.814E-06
396266.283767677.2	396266.28	3767677	0	0	0	0	0	0	6.70624E-08	0	0	0	0	7.39348E-12	7.39348E-12	7.393E-06
396366.283767677.2	396366.28	3767677	0	0	0	0	0	0	7.14612E-08	0	0	0	0	7.87843E-12	7.87843E-12	7.878E-06
396466.283767677.2	396466.28	3767677	0	0	0	0	0	0	8.45253E-08	0	0	0	0	9.31872E-12	9.31872E-12	9.319E-06
396566.283767677.2	396566.28	3767677	0	0	0	0	0	0	8.5292E-08	0	0	0	0	9.40324E-12	9.40324E-12	9.403E-06
396666.283767677.2	396666.28	3767677	0	0	0	0	0	0	7.98975E-08	0	0	0	0	8.80852E-12	8.80852E-12	8.809E-06
396766.283767677.2	396766.28	3767677	0	0	0	0	0	0	8.31757E-08	0	0	0	0	9.16993E-12	9.16993E-12	9.17E-06
396866.283767677.2	396866.28	3767677	0	0	0	0	0	0	8.78496E-08	0	0	0	0	9.68522E-12	9.68522E-12	9.685E-06
396966.283767677.2	396966.28	3767677	0	0	0	0	0	0	8.88059E-08	0	0	0	0	9.79065E-12	9.79065E-12	9.791E-06
397066.283767677.2	397066.28	3767677	0	0	0	0	0	0	8.85386E-08	0	0	0	0	9.76118E-12	9.76118E-12	9.761E-06
397166.283767677.2	397166.28	3767677	0	0	0	0	0	0	8.65801E-08	0	0	0	0	9.54526E-12	9.54526E-12	9.545E-06
397266.283767677.2	397266.28	3767677	0	0	0	0	0	0	7.93981E-08	0	0	0	0	8.75346E-12	8.75346E-12	8.753E-06
397366.283767677.2	397366.28	3767677	0	0	0	0	0	0	8.07646E-08	0	0	0	0	8.90411E-12	8.90411E-12	8.904E-06
397466.283767677.2	397466.28	3767677	0	0	0	0	0	0	6.9462E-08	0	0	0	0	7.65802E-12	7.65802E-12	7.658E-06
397566.283767677.2	397566.28	3767677	0	0	0	0	0	0	6.66442E-08	0	0	0	0	7.34737E-12	7.34737E-12	7.347E-06
397666.283767677.2	397666.28	3767677	0	0	0	0	0	0	6.27614E-08	0	0	0	0	6.9193E-12	6.9193E-12	6.919E-06
397766.283767677.2	397766.28	3767677	0	0	0	0	0	0	5.85869E-08	0	0	0	0	6.45907E-12	6.45907E-12	6.459E-06
397866.283767677.2	397866.28	3767677	0	0	0	0	0	0	5.5754E-08	0	0	0	0	6.14675E-12	6.14675E-12	6.147E-06
396166.283767777.2	396166.28	3767777	0	0	0	0	0	0	7.9549E-08	0	0	0	0	8.77009E-12	8.77009E-12	8.77E-06
396266.283767777.2	396266.28	3767777	0	0	0	0	0	0	9.03676E-08	0	0	0	0	9.96282E-12	9.96282E-12	9.963E-06
396366.283767777.2	396366.28	3767777	0	0	0	0	0	0	8.79503E-08	0	0	0	0	9.69632E-12	9.69632E-12	9.696E-06
396466.283767777.2	396466.28	3767777	0	0	0	0	0	0	9.28522E-08	0	0	0	0	1.02367E-11	1.02367E-11	1.024E-05
396566.283767777.2	396566.28	3767777	0	0	0	0	0	0	8.79114E-08	0	0	0	0	9.69203E-12	9.69203E-12	9.692E-06
396666.283767777.2	396666.28	3767777	0	0	0	0	0	0	9.2456E-08	0	0	0	0	1.01931E-11	1.01931E-11	1.019E-05
396766.283767777.2	396766.28	3767777	0	0	0	0	0	0	1.0134E-07	0	0	0	0	1.11726E-11	1.11726E-11	1.117E-05
396866.283767777.2	396866.28	3767777	0	0	0	0	0	0	1.08223E-07	0	0	0	0	1.19314E-11	1.19314E-11	1.193E-05
396966.283767777.2	396966.28	3767777	0	0	0	0	0	0	1.06896E-07	0	0	0	0	1.17851E-11	1.17851E-11	1.179E-05
397066.283767777.2	397066.28	3767777	0	0	0	0	0	0	1.07043E-07	0	0	0	0	1.18012E-11	1.18012E-11	1.18E-05
397166.283767777.2	397166.28	3767777	0	0	0	0	0	0	1.07189E-07	0	0	0	0	1.18174E-11	1.18174E-11	1.182E-05
397266.283767777.2	397266.28	3767777	0	0	0	0	0	0	9.97286E-08	0	0	0	0	1.09949E-11	1.09949E-11	1.099E-05
397366.283767777.2	397366.28	3767777	0	0	0	0	0	0	9.77948E-08	0	0	0	0	1.07817E-11	1.07817E-11	1.078E-05
397466.283767777.2	397466.28	3767777	0	0	0	0	0	0	8.4394E-08	0	0	0	0	9.30424E-12	9.30424E-12	9.304E-06
397566.283767777.2	397566.28	3767777	0	0	0	0	0	0	7.78492E-08	0	0	0	0	8.58269E-12	8.58269E-12	8.583E-06
397666.283767777.2	397666.28	3767777	0	0	0	0	0	0	7.40874E-08	0	0	0	0	8.16797E-12	8.16797E-12	8.168E-06
397766.283767777.2	397766.28	3767777	0	0	0	0	0	0	6.61501E-08	0	0	0	0	7.2929E-12	7.2929E-12	7.293E-06
397866.283767777.2	397866.28	3767777	0	0	0	0	0	0	6.03086E-08	0	0	0	0	6.64889E-12	6.64889E-12	6.649E-06
396166.283767877.2	396166.28	3767877	0	0	0	0	0	0	8.7916E-08	0	0	0	0	9.69254E-12	9.69254E-12	9.693E-06
396266.283767877.2	396266.28	3767877	0	0	0	0	0	0	1.01545E-07	0	0	0	0	1.11951E-11	1.11951E-11	1.12E-05
396366.283767877.2	396366.28	3767877	0	0	0	0	0	0	1.07341E-07	0	0	0	0	1.18341E-11	1.18341E-11	1.183E-05
396466.283767877.2	396466.28	3767877	0	0	0	0	0	0	1.01855E-07	0	0	0	0	1.12293E-11	1.12293E-11	1.123E-05
396566.283767877.2	396566.28	3767877	0	0	0	0	0	0	1.0081E-07	0	0	0	0	1.11141E-11	1.11141E-11	1.111E-05
397466.283767877.2	397466.28	3767877	0	0	0	0	0	0	1.18192E-07	0	0	0	0	1.30304E-11	1.30304E-11	1.303E-05
397566.283767877.2	397566.28	3767877	0	0	0	0	0	0	9.30936E-08	0	0	0	0	1.02634E-11	1.02634E-11	1.026E-05
397666.283767877.2	397666.28	3767877	0	0	0	0	0	0	7.84755E-08	0	0	0	0	8.65174E-12	8.65174E-12	8.652E-06
397766.283767877.2	397766.28	3767877	0	0	0	0	0	0	6.9464E-08	0	0	0	0	7.65824E-12	7.65824E-12	7.658E-06
397866.283767877.2	397866.28	3767877	0	0	0	0	0	0	6.95791E-08	0	0	0	0	7.67094E-12	7.67094E-12	7.671E-06
396166.283767977.2	396166.28	3767977	0	0	0	0	0	0	9.21507E-08	0	0	0	0	1.01594E-11	1.01594E-11	1.016E-05
396266.283767977.2	396266.28	3767977	0	0	0	0	0	0	1.0649E-07	0	0	0	0	1.17402E-11	1.17402E-11	1.174E-05
396366.283767977.2	396366.28	3767977	0	0	0	0	0	0	1.1518E-07	0	0	0	0	1.26983E-11	1.26983E-11	1.27E-05
396466.283767977.2	396466.28	3767977	0	0	0	0	0	0	1.10665E-07	0	0	0	0	1.22006E-11	1.22006E-11	1.22E-05
397466.283767977.2	397466.28	3767977	0	0	0	0	0	0	1.39392E-07	0	0	0	0	1.53677E-11	1.53677E-11	1.537E-05
397566.283767977.2	397566.28	3767977	0	0	0	0	0	0	1.12568E-07	0	0	0	0	1.24104E-11	1.24104E-11	1.241E-05
397666.283767977.2	397666.28	3767977	0	0	0	0	0	0	9.34362E-08	0	0	0	0	1.03011E-11	1.03011E-11	1.03E-05
397766.283767977.2	397766.28	3767977	0	0	0	0	0	0	9.41203E-08	0	0	0	0	1.03765E-11	1.03765E-11	1.038E-05
397866.283767977.2	397866.28	3767977	0	0	0	0	0	0	8.60711E-08	0	0	0	0	9.48914E-12	9.48914E-12	9.489E-06
396166.283768077.2	396166.28	3768077	0	0	0	0	0	0	1.24227E-07	0	0	0	0	1.36958E-11	1.36958E-11	1.37E-05
396266.283768077.2	396266.28	3768077	0	0	0	0	0	0	1.17734E-07	0	0	0	0	1.29799E-11	1.29799E-11	1.298E-05
396366.283768077.2	396366.28	3768077	0	0	0	0	0	0	1.27762E-07	0	0	0	0	1.40854E-11	1.40854E-11	1.409E-05
396466.283768077.2	396466.28	3768077	0	0	0	0	0	0	1.38306E-07	0	0	0	0	1.52479E-11	1.52479E-11	1.525E-05
397466.283768077.2	397466.28	3768077	0	0	0	0	0	0	2.41898E-07	0	0	0	0	2.66687E-11	2.66687E-11	2.667E-05
397566.283768077.2	397566.28	3768077	0	0	0	0	0	0	1.91162E-07	0	0	0	0	2.10752E-11	2.10752E-11	2.108E-05

Garvey Reservoir Rehab - Unmitigated Standby Generator			Demolition - 2025	Demolition - 2026	Site Preparation - 2025	ite Preparation - 202	Grading - 2025	Grading - 2026	Infrastructure - 2025	nfrastructure - 2026	Paving - 2025	rchitectural Coating - 202	Child Risk			
Unique Identifier	X (UTM)	Y (UTM)	2025	1900	2025	2026	2026	1900	2026	1900	2026	1900	3rd Trimester	0<2	Total	per million
397666.283768077.2	397666.28	3768077	0	0	0	0	0	0	1.43419E-07	0	0	0	0	1.58116E-11	1.58116E-11	1.581E-05
397766.283768077.2	397766.28	3768077	0	0	0	0	0	0	1.1198E-07	0	0	0	0	1.23456E-11	1.23456E-11	1.235E-05
397866.283768077.2	397866.28	3768077	0	0	0	0	0	0	9.70612E-08	0	0	0	0	1.07008E-11	1.07008E-11	1.07E-05
396166.283768177.2	396166.28	3768177	0	0	0	0	0	0	1.49824E-07	0	0	0	0	1.65178E-11	1.65178E-11	1.652E-05
396266.283768177.2	396266.28	3768177	0	0	0	0	0	0	1.54745E-07	0	0	0	0	1.70603E-11	1.70603E-11	1.706E-05
396366.283768177.2	396366.28	3768177	0	0	0	0	0	0	1.68458E-07	0	0	0	0	1.85721E-11	1.85721E-11	1.857E-05
396466.283768177.2	396466.28	3768177	0	0	0	0	0	0	1.65874E-07	0	0	0	0	1.82872E-11	1.82872E-11	1.829E-05
397466.283768177.2	397466.28	3768177	0	0	0	0	0	0	5.29026E-07	0	0	0	0	5.83239E-11	5.83239E-11	5.832E-05
397566.283768177.2	397566.28	3768177	0	0	0	0	0	0	2.77513E-07	0	0	0	0	3.05951E-11	3.05951E-11	3.06E-05
397666.283768177.2	397666.28	3768177	0	0	0	0	0	0	1.89379E-07	0	0	0	0	2.08786E-11	2.08786E-11	2.088E-05
397766.283768177.2	397766.28	3768177	0	0	0	0	0	0	1.39652E-07	0	0	0	0	1.53963E-11	1.53963E-11	1.54E-05
397866.283768177.2	397866.28	3768177	0	0	0	0	0	0	1.1459E-07	0	0	0	0	1.26333E-11	1.26333E-11	1.263E-05
396166.283768277.2	396166.28	3768277	0	0	0	0	0	0	1.7819E-07	0	0	0	0	1.9645E-11	1.9645E-11	1.965E-05
396266.283768277.2	396266.28	3768277	0	0	0	0	0	0	1.75353E-07	0	0	0	0	1.93322E-11	1.93322E-11	1.933E-05
396366.283768277.2	396366.28	3768277	0	0	0	0	0	0	1.96843E-07	0	0	0	0	2.17015E-11	2.17015E-11	2.17E-05
396466.283768277.2	396466.28	3768277	0	0	0	0	0	0	2.03696E-07	0	0	0	0	2.2457E-11	2.2457E-11	2.246E-05
397366.283768277.2	397366.28	3768277	0	0	0	0	0	0	4.20457E-06	0	0	0	0	4.63544E-10	4.63544E-10	0.0004635
397466.283768277.2	397466.28	3768277	0	0	0	0	0	0	8.25359E-07	0	0	0	0	9.09939E-11	9.09939E-11	9.099E-05
397566.283768277.2	397566.28	3768277	0	0	0	0	0	0	3.76802E-07	0	0	0	0	4.15415E-11	4.15415E-11	4.154E-05
397666.283768277.2	397666.28	3768277	0	0	0	0	0	0	2.36098E-07	0	0	0	0	2.60293E-11	2.60293E-11	2.603E-05
397766.283768277.2	397766.28	3768277	0	0	0	0	0	0	1.69126E-07	0	0	0	0	1.86458E-11	1.86458E-11	1.865E-05
397866.283768277.2	397866.28	3768277	0	0	0	0	0	0	1.30201E-07	0	0	0	0	1.43544E-11	1.43544E-11	1.435E-05
396166.283768377.2	396166.28	3768377	0	0	0	0	0	0	2.09999E-07	0	0	0	0	2.31519E-11	2.31519E-11	2.315E-05
396266.283768377.2	396266.28	3768377	0	0	0	0	0	0	2.18663E-07	0	0	0	0	2.41071E-11	2.41071E-11	2.411E-05
396366.283768377.2	396366.28	3768377	0	0	0	0	0	0	2.44136E-07	0	0	0	0	2.69155E-11	2.69155E-11	2.692E-05
396466.283768377.2	396466.28	3768377	0	0	0	0	0	0	2.63395E-07	0	0	0	0	2.90386E-11	2.90386E-11	2.904E-05
397266.283768377.2	397266.28	3768377	0	0	0	0	0	0	6.60068E-06	0	0	0	0	7.27709E-10	7.27709E-10	0.0007277
397366.283768377.2	397366.28	3768377	0	0	0	0	0	0	2.96878E-06	0	0	0	0	3.27301E-10	3.27301E-10	0.0003273
397466.283768377.2	397466.28	3768377	0	0	0	0	0	0	9.57957E-07	0	0	0	0	1.05613E-10	1.05613E-10	0.0001056
397566.283768377.2	397566.28	3768377	0	0	0	0	0	0	4.59895E-07	0	0	0	0	5.07024E-11	5.07024E-11	5.07E-05
397666.283768377.2	397666.28	3768377	0	0	0	0	0	0	2.78761E-07	0	0	0	0	3.07328E-11	3.07328E-11	3.073E-05
397766.283768377.2	397766.28	3768377	0	0	0	0	0	0	1.95974E-07	0	0	0	0	2.16056E-11	2.16056E-11	2.161E-05
397866.283768377.2	397866.28	3768377	0	0	0	0	0	0	1.40971E-07	0	0	0	0	1.55417E-11	1.55417E-11	1.554E-05
396166.283768477.2	396166.28	3768477	0	0	0	0	0	0	2.57641E-07	0	0	0	0	2.84043E-11	2.84043E-11	2.84E-05
396266.283768477.2	396266.28	3768477	0	0	0	0	0	0	2.77657E-07	0	0	0	0	3.0611E-11	3.0611E-11	3.061E-05
396366.283768477.2	396366.28	3768477	0	0	0	0	0	0	3.07757E-07	0	0	0	0	3.39295E-11	3.39295E-11	3.393E-05
396466.283768477.2	396466.28	3768477	0	0	0	0	0	0	3.44617E-07	0	0	0	0	3.79932E-11	3.79932E-11	3.799E-05
397166.283768477.2	397166.28	3768477	0	0	0	0	0	0	1.2268E-06	0	0	0	0	1.35252E-10	1.35252E-10	0.0001353
397266.283768477.2	397266.28	3768477	0	0	0	0	0	0	6.70005E-06	0	0	0	0	7.38665E-10	7.38665E-10	0.0007387
397366.283768477.2	397366.28	3768477	0	0	0	0	0	0	2.7145E-06	0	0	0	0	2.99267E-10	2.99267E-10	0.0002993
397466.283768477.2	397466.28	3768477	0	0	0	0	0	0	8.8282E-07	0	0	0	0	9.73288E-11	9.73288E-11	9.733E-05
397566.283768477.2	397566.28	3768477	0	0	0	0	0	0	5.27707E-07	0	0	0	0	5.81784E-11	5.81784E-11	5.818E-05
397666.283768477.2	397666.28	3768477	0	0	0	0	0	0	3.27457E-07	0	0	0	0	3.61013E-11	3.61013E-11	3.61E-05
397766.283768477.2	397766.28	3768477	0	0	0	0	0	0	2.07168E-07	0	0	0	0	2.28398E-11	2.28398E-11	2.284E-05
397866.283768477.2	397866.28	3768477	0	0	0	0	0	0	1.61501E-07	0	0	0	0	1.78051E-11	1.78051E-11	1.781E-05
396166.283768577.2	396166.28	3768577	0	0	0	0	0	0	3.27836E-07	0	0	0	0	3.61431E-11	3.61431E-11	3.614E-05
396266.283768577.2	396266.28	3768577	0	0	0	0	0	0	3.69551E-07	0	0	0	0	4.07422E-11	4.07422E-11	4.074E-05
396366.283768577.2	396366.28	3768577	0	0	0	0	0	0	3.98699E-07	0	0	0	0	4.39556E-11	4.39556E-11	4.396E-05
396466.283768577.2	396466.28	3768577	0	0	0	0	0	0	4.78759E-07	0	0	0	0	5.27821E-11	5.27821E-11	5.278E-05
396566.283768577.2	396566.28	3768577	0	0	0	0	0	0	4.68876E-07	0	0	0	0	5.16924E-11	5.16924E-11	5.169E-05
396866.283768577.2	396866.28	3768577	0	0	0	0	0	0	6.0002E-07	0	0	0	0	6.61509E-11	6.61509E-11	6.615E-05
396966.283768577.2	396966.28	3768577	0	0	0	0	0	0	6.96704E-07	0	0	0	0	7.68101E-11	7.68101E-11	7.681E-05
397066.283768577.2	397066.28	3768577	0	0	0	0	0	0	8.61054E-07	0	0	0	0	9.49292E-11	9.49292E-11	9.493E-05
397166.283768577.2	397166.28	3768577	0	0	0	0	0	0	1.47425E-06	0	0	0	0	1.62533E-10	1.62533E-10	0.0001625
397266.283768577.2	397266.28	3768577	0	0	0	0	0	0	6.49954E-06	0	0	0	0	7.16559E-10	7.16559E-10	0.0007166
397366.283768577.2	397366.28	3768577	0	0	0	0	0	0	2.72239E-06	0	0	0	0	3.00137E-10	3.00137E-10	0.0003001
397466.283768577.2	397466.28	3768577	0	0	0	0	0	0	8.72314E-07	0	0	0	0	9.61706E-11	9.61706E-11	9.617E-05
397566.283768577.2	397566.28	3768577	0	0	0	0	0	0	5.22169E-07	0	0	0	0	5.75679E-11	5.75679E-11	5.757E-05
397666.283768577.2	397666.28	3768577	0	0	0	0	0	0	3.47143E-07	0	0	0	0	3.82717E-11	3.82717E-11	3.827E-05
397766.283768577.2	397766.28	3768577	0	0	0	0	0	0	2.47039E-07	0	0	0	0	2.72354E-11	2.72354E-11	2.724E-05
397866.283768577.2	397866.28	3768577	0	0	0	0	0	0	1.80373E-07	0	0	0	0	1.98857E-11	1.98857E-11	1.989E-05
396166.283768677.2	396166.28	3768677	0	0	0	0	0	0	5.75926E-07	0	0	0	0	6.34945E-11	6.34945E-11	6.349E-05
396266.283768677.2	396266.28	3768677	0	0	0	0	0	0	6.57528E-07	0	0	0	0	7.2491E-11	7.2491E-11	7.249E-05
396366.283768677.2	396366.28	3768677	0	0	0	0	0	0	6.38467E-07	0	0	0	0	7.03895E-11	7.03895E-11	7.039E-05
396466.283768677.2	396466.28	3768677	0	0	0	0	0	0	7.83836E-07	0	0	0	0	8.64161E-11	8.64161E-11	8.642E-05
396566.283768677.2	396566.28	3768677	0	0	0	0	0	0	7.92388E-07	0	0	0	0	8.7359E-11	8.7359E-11	8.736E-05
396666.283768677.2	396666.28	3768677	0	0	0	0	0	0	8.08991E-07	0	0	0	0	8.91894E-11	8.91894E-11	8.919E-05
396766.283768677.2	396766.28	3768677	0	0	0	0	0	0	8.39518E-07	0	0	0	0	9.2555E-11	9.2555E-11	9.255E-05
396866.283768677.2	396866.28	3768677	0	0	0	0	0	0	9.32354E-07	0	0	0	0	1.0279E-10	1.0279E-10	0.0001028
396966.283768677.2	396966.28	3768677	0	0	0	0	0	0	1.02056E-06	0	0	0	0	1.12515E-10	1.12515E-10	0.0001125
397066.283768677.2	397066.28	3768677	0	0	0	0	0	0	1.18384E-06	0	0	0	0	1.30516E-10	1.30516E-10	0.0001305

Garvey Reservoir Rehab - Unmitigated Standby Generator			Demolition - 2025	Demolition - 2026	Site Preparation - 2025	ite Preparation - 202	Grading - 2025	Grading - 2026	Infrastructure - 2025	nfrastructure - 2026	Paving - 2025	rchitectural Coating - 202	Child Risk			
Unique Identifier	X (UTM)	Y (UTM)	2025	1900	2025	2026	2026	1900	2026	1900	2026	1900	3rd Trimester	0<2	Total	per million
397166.283768677.2	397166.28	3768677	0	0	0	0	0	0	1.85806E-06	0	0	0	0	2.04847E-10	2.04847E-10	0.0002048
397366.283768677.2	397366.28	3768677	0	0	0	0	0	0	2.47083E-06	0	0	0	0	2.72403E-10	2.72403E-10	0.0002724
397466.283768677.2	397466.28	3768677	0	0	0	0	0	0	9.95508E-07	0	0	0	0	1.09752E-10	1.09752E-10	0.0001098
397566.283768677.2	397566.28	3768677	0	0	0	0	0	0	5.42881E-07	0	0	0	0	5.98514E-11	5.98514E-11	5.985E-05
397666.283768677.2	397666.28	3768677	0	0	0	0	0	0	3.55687E-07	0	0	0	0	3.92137E-11	3.92137E-11	3.921E-05
397766.283768677.2	397766.28	3768677	0	0	0	0	0	0	2.62349E-07	0	0	0	0	2.89234E-11	2.89234E-11	2.892E-05
397866.283768677.2	397866.28	3768677	0	0	0	0	0	0	1.9264E-07	0	0	0	0	2.12381E-11	2.12381E-11	2.124E-05
396166.283768777.2	396166.28	3768777	0	0	0	0	0	0	1.67232E-06	0	0	0	0	1.8437E-10	1.8437E-10	0.0001844
396266.283768777.2	396266.28	3768777	0	0	0	0	0	0	2.07798E-06	0	0	0	0	2.29093E-10	2.29093E-10	0.0002291
396366.283768777.2	396366.28	3768777	0	0	0	0	0	0	1.52339E-06	0	0	0	0	1.67951E-10	1.67951E-10	0.000168
396466.283768777.2	396466.28	3768777	0	0	0	0	0	0	1.99065E-06	0	0	0	0	2.19464E-10	2.19464E-10	0.0002195
396566.283768777.2	396566.28	3768777	0	0	0	0	0	0	2.13172E-06	0	0	0	0	2.35017E-10	2.35017E-10	0.000235
396666.283768777.2	396666.28	3768777	0	0	0	0	0	0	2.13097E-06	0	0	0	0	2.34935E-10	2.34935E-10	0.0002349
396766.283768777.2	396766.28	3768777	0	0	0	0	0	0	2.20438E-06	0	0	0	0	2.43028E-10	2.43028E-10	0.000243
396866.283768777.2	396866.28	3768777	0	0	0	0	0	0	2.29184E-06	0	0	0	0	2.5267E-10	2.5267E-10	0.0002527
396966.283768777.2	396966.28	3768777	0	0	0	0	0	0	2.34836E-06	0	0	0	0	2.58901E-10	2.58901E-10	0.0002589
397066.283768777.2	397066.28	3768777	0	0	0	0	0	0	2.52992E-06	0	0	0	0	2.78917E-10	2.78917E-10	0.0002789
397166.283768777.2	397166.28	3768777	0	0	0	0	0	0	3.04664E-06	0	0	0	0	3.35885E-10	3.35885E-10	0.0003359
397266.283768777.2	397266.28	3768777	0	0	0	0	0	0	9.71729E-06	0	0	0	0	1.07131E-09	1.07131E-09	0.0010713
397366.283768777.2	397366.28	3768777	0	0	0	0	0	0	3.37633E-06	0	0	0	0	3.72233E-10	3.72233E-10	0.0003722
397466.283768777.2	397466.28	3768777	0	0	0	0	0	0	1.18753E-06	0	0	0	0	1.30922E-10	1.30922E-10	0.0001309
397566.283768777.2	397566.28	3768777	0	0	0	0	0	0	6.36904E-07	0	0	0	0	7.02172E-11	7.02172E-11	7.022E-05
397666.283768777.2	397666.28	3768777	0	0	0	0	0	0	4.00561E-07	0	0	0	0	4.41609E-11	4.41609E-11	4.416E-05
397766.283768777.2	397766.28	3768777	0	0	0	0	0	0	2.74228E-07	0	0	0	0	3.02331E-11	3.02331E-11	3.023E-05
397866.283768777.2	397866.28	3768777	0	0	0	0	0	0	1.99621E-07	0	0	0	0	2.20077E-11	2.20077E-11	2.201E-05
396166.283768877.2	396166.28	3768877	0	0	0	0	0	0	6.73295E-06	0	0	0	0	7.42292E-10	7.42292E-10	0.0007423
396266.283768877.2	396266.28	3768877	0	0	0	0	0	0	8.6713E-06	0	0	0	0	9.55991E-10	9.55991E-10	0.000956
396366.283768877.2	396366.28	3768877	0	0	0	0	0	0	8.49094E-06	0	0	0	0	9.36107E-10	9.36107E-10	0.0009361
396466.283768877.2	396466.28	3768877	0	0	0	0	0	0	9.35342E-06	0	0	0	0	1.03119E-09	1.03119E-09	0.0010312
396566.283768877.2	396566.28	3768877	0	0	0	0	0	0	8.82157E-06	0	0	0	0	9.72558E-10	9.72558E-10	0.0009726
396666.283768877.2	396666.28	3768877	0	0	0	0	0	0	9.58412E-06	0	0	0	0	1.05663E-09	1.05663E-09	0.0010566
396766.283768877.2	396766.28	3768877	0	0	0	0	0	0	9.27598E-06	0	0	0	0	1.02265E-09	1.02265E-09	0.0010227
396866.283768877.2	396866.28	3768877	0	0	0	0	0	0	9.01067E-06	0	0	0	0	9.93405E-10	9.93405E-10	0.0009934
396966.283768877.2	396966.28	3768877	0	0	0	0	0	0	8.6645E-06	0	0	0	0	9.55241E-10	9.55241E-10	0.0009552
397066.283768877.2	397066.28	3768877	0	0	0	0	0	0	8.7596E-06	0	0	0	0	9.65725E-10	9.65725E-10	0.0009657
397166.283768877.2	397166.28	3768877	0	0	0	0	0	0	9.00308E-06	0	0	0	0	9.92569E-10	9.92569E-10	0.0009926
397266.283768877.2	397266.28	3768877	0	0	0	0	0	0	9.45846E-06	0	0	0	0	1.04277E-09	1.04277E-09	0.0010428
397366.283768877.2	397366.28	3768877	0	0	0	0	0	0	4.65064E-06	0	0	0	0	5.12723E-10	5.12723E-10	0.0005127
397466.283768877.2	397466.28	3768877	0	0	0	0	0	0	1.2446E-06	0	0	0	0	1.37214E-10	1.37214E-10	0.0001372
397566.283768877.2	397566.28	3768877	0	0	0	0	0	0	6.36416E-07	0	0	0	0	7.01634E-11	7.01634E-11	7.016E-05
397666.283768877.2	397666.28	3768877	0	0	0	0	0	0	3.94762E-07	0	0	0	0	4.35216E-11	4.35216E-11	4.352E-05
397766.283768877.2	397766.28	3768877	0	0	0	0	0	0	2.72878E-07	0	0	0	0	3.00842E-11	3.00842E-11	3.008E-05
397866.283768877.2	397866.28	3768877	0	0	0	0	0	0	2.01962E-07	0	0	0	0	2.22658E-11	2.22658E-11	2.227E-05
3964253767739	396425	3767739	0	0	0	0	0	0	9.0768E-08	0	0	0	0	1.0007E-11	1.0007E-11	1.001E-05
3964753767739	396475	3767739	0	0	0	0	0	0	9.29366E-08	0	0	0	0	1.0246E-11	1.0246E-11	1.025E-05
3965253767739	396525	3767739	0	0	0	0	0	0	8.6624E-08	0	0	0	0	9.55009E-12	9.55009E-12	9.55E-06
3965753767739	396575	3767739	0	0	0	0	0	0	8.91282E-08	0	0	0	0	9.82617E-12	9.82617E-12	9.826E-06
3966253767739	396625	3767739	0	0	0	0	0	0	8.56001E-08	0	0	0	0	9.43721E-12	9.43721E-12	9.437E-06
3966753767739	396675	3767739	0	0	0	0	0	0	8.75942E-08	0	0	0	0	9.65706E-12	9.65706E-12	9.657E-06
3967253767739	396725	3767739	0	0	0	0	0	0	9.15443E-08	0	0	0	0	1.00925E-11	1.00925E-11	1.009E-05
3967753767739	396775	3767739	0	0	0	0	0	0	9.23137E-08	0	0	0	0	1.01774E-11	1.01774E-11	1.018E-05
3968253767739	396825	3767739	0	0	0	0	0	0	9.75158E-08	0	0	0	0	1.07509E-11	1.07509E-11	1.075E-05
3968753767739	396875	3767739	0	0	0	0	0	0	1.00356E-07	0	0	0	0	1.1064E-11	1.1064E-11	1.106E-05
3969253767739	396925	3767739	0	0	0	0	0	0	1.00079E-07	0	0	0	0	1.10335E-11	1.10335E-11	1.103E-05
3969753767739	396975	3767739	0	0	0	0	0	0	9.94142E-08	0	0	0	0	1.09602E-11	1.09602E-11	1.096E-05
3970253767739	397025	3767739	0	0	0	0	0	0	9.89956E-08	0	0	0	0	1.0914E-11	1.0914E-11	1.091E-05
3970753767739	397075	3767739	0	0	0	0	0	0	9.95011E-08	0	0	0	0	1.09698E-11	1.09698E-11	1.097E-05
3971253767739	397125	3767739	0	0	0	0	0	0	9.96226E-08	0	0	0	0	1.09832E-11	1.09832E-11	1.098E-05
3971753767739	397175	3767739	0	0	0	0	0	0	9.83126E-08	0	0	0	0	1.08387E-11	1.08387E-11	1.084E-05
3972253767739	397225	3767739	0	0	0	0	0	0	9.62264E-08	0	0	0	0	1.06087E-11	1.06087E-11	1.061E-05
3972753767739	397275	3767739	0	0	0	0	0	0	9.0753E-08	0	0	0	0	1.00053E-11	1.00053E-11	1.001E-05
3973253767739	397325	3767739	0	0	0	0	0	0	9.07893E-08	0	0	0	0	1.00093E-11	1.00093E-11	1.001E-05
3973753767739	397375	3767739	0	0	0	0	0	0	9.04884E-08	0	0	0	0	9.97614E-12	9.97614E-12	9.976E-06
3974253767739	397425	3767739	0	0	0	0	0	0	8.80578E-08	0	0	0	0	9.70817E-12	9.70817E-12	9.708E-06
3974753767739	397475	3767739	0	0	0	0	0	0	7.77992E-08	0	0	0	0	8.57718E-12	8.57718E-12	8.577E-06
3975253767739	397525	3767739	0	0	0	0	0	0	7.52087E-08	0	0	0	0	8.29159E-12	8.29159E-12	8.292E-06
3964253767789	396425	3767789	0	0	0	0	0	0	9.69611E-08	0	0	0	0	1.06897E-11	1.06897E-11	1.069E-05
3964753767789	396475	3767789	0	0	0	0	0	0	9.3413E-08	0	0	0	0	1.02986E-11	1.02986E-11	1.03E-05
3965253767789	396525	3767789	0	0	0	0	0	0	8.84707E-08	0	0	0	0	9.7537E-12	9.7537E-12	9.754E-06
3965753767789	396575	3767789	0	0	0	0	0	0	8.95415E-08	0	0	0	0	9.87175E-12	9.87175E-12	9.872E-06
3966253767789	396625	3767789	0	0	0	0	0	0	9.1899E-08	0	0	0	0	1.01317E-11	1.01317E-11	1.013E-05

Garvey Reservoir Rehab - Unmitigated Standby Generator			Demolition - 2025	Demolition - 2026	Site Preparation - 2025	ite Preparation - 202	Grading - 2025	Grading - 2026	Infrastructure - 2025	nfrastructure - 2026	Paving - 2025	rchitectural Coating - 202	Child Risk			
Unique Identifier	X (UTM)	Y (UTM)	2025	1900	2025	2026	2026	1900	2026	1900	2026	1900	3rd Trimester	0<2	Total	per million
3966753767789	396675	3767789	0	0	0	0	0	0	9.46584E-08	0	0	0	0	1.04359E-11	1.04359E-11	1.044E-05
3967253767789	396725	3767789	0	0	0	0	0	0	1.02105E-07	0	0	0	0	1.12569E-11	1.12569E-11	1.126E-05
3967753767789	396775	3767789	0	0	0	0	0	0	1.04588E-07	0	0	0	0	1.15306E-11	1.15306E-11	1.153E-05
3968253767789	396825	3767789	0	0	0	0	0	0	1.09274E-07	0	0	0	0	1.20472E-11	1.20472E-11	1.205E-05
3968753767789	396875	3767789	0	0	0	0	0	0	1.10835E-07	0	0	0	0	1.22193E-11	1.22193E-11	1.222E-05
3969253767789	396925	3767789	0	0	0	0	0	0	1.10785E-07	0	0	0	0	1.22138E-11	1.22138E-11	1.221E-05
3969753767789	396975	3767789	0	0	0	0	0	0	1.09421E-07	0	0	0	0	1.20635E-11	1.20635E-11	1.206E-05
3970253767789	397025	3767789	0	0	0	0	0	0	1.0881E-07	0	0	0	0	1.1996E-11	1.1996E-11	1.2E-05
3970753767789	397075	3767789	0	0	0	0	0	0	1.09829E-07	0	0	0	0	1.21084E-11	1.21084E-11	1.211E-05
3971253767789	397125	3767789	0	0	0	0	0	0	1.10623E-07	0	0	0	0	1.21959E-11	1.21959E-11	1.22E-05
3971753767789	397175	3767789	0	0	0	0	0	0	1.10126E-07	0	0	0	0	1.21411E-11	1.21411E-11	1.214E-05
3972253767789	397225	3767789	0	0	0	0	0	0	1.08747E-07	0	0	0	0	1.19891E-11	1.19891E-11	1.199E-05
3972753767789	397275	3767789	0	0	0	0	0	0	1.02727E-07	0	0	0	0	1.13255E-11	1.13255E-11	1.133E-05
3973253767789	397325	3767789	0	0	0	0	0	0	1.00232E-07	0	0	0	0	1.10503E-11	1.10503E-11	1.105E-05
3973753767789	397375	3767789	0	0	0	0	0	0	1.00552E-07	0	0	0	0	1.10856E-11	1.10856E-11	1.109E-05
3974253767789	397425	3767789	0	0	0	0	0	0	9.8493E-08	0	0	0	0	1.08586E-11	1.08586E-11	1.086E-05
3974753767789	397475	3767789	0	0	0	0	0	0	8.58282E-08	0	0	0	0	9.46237E-12	9.46237E-12	9.462E-06
3975253767789	397525	3767789	0	0	0	0	0	0	8.32442E-08	0	0	0	0	9.17748E-12	9.17748E-12	9.177E-06
3964253767839	396425	3767839	0	0	0	0	0	0	1.0352E-07	0	0	0	0	1.14128E-11	1.14128E-11	1.141E-05
3964753767839	396475	3767839	0	0	0	0	0	0	1.02861E-07	0	0	0	0	1.13402E-11	1.13402E-11	1.134E-05
3965253767839	396525	3767839	0	0	0	0	0	0	9.32844E-08	0	0	0	0	1.02844E-11	1.02844E-11	1.028E-05
3965753767839	396575	3767839	0	0	0	0	0	0	9.5963E-08	0	0	0	0	1.05797E-11	1.05797E-11	1.058E-05
3966253767839	396625	3767839	0	0	0	0	0	0	9.88542E-08	0	0	0	0	1.08984E-11	1.08984E-11	1.09E-05
3966753767839	396675	3767839	0	0	0	0	0	0	1.10261E-07	0	0	0	0	1.21561E-11	1.21561E-11	1.216E-05
3967253767839	396725	3767839	0	0	0	0	0	0	1.15507E-07	0	0	0	0	1.27344E-11	1.27344E-11	1.273E-05
3967753767839	396775	3767839	0	0	0	0	0	0	1.18535E-07	0	0	0	0	1.30682E-11	1.30682E-11	1.307E-05
3968253767839	396825	3767839	0	0	0	0	0	0	1.21489E-07	0	0	0	0	1.33939E-11	1.33939E-11	1.339E-05
3968753767839	396875	3767839	0	0	0	0	0	0	1.22916E-07	0	0	0	0	1.35512E-11	1.35512E-11	1.355E-05
3969253767839	396925	3767839	0	0	0	0	0	0	1.23286E-07	0	0	0	0	1.3592E-11	1.3592E-11	1.359E-05
3969753767839	396975	3767839	0	0	0	0	0	0	1.22016E-07	0	0	0	0	1.3452E-11	1.3452E-11	1.345E-05
3970253767839	397025	3767839	0	0	0	0	0	0	1.21042E-07	0	0	0	0	1.33447E-11	1.33447E-11	1.334E-05
3970753767839	397075	3767839	0	0	0	0	0	0	1.23654E-07	0	0	0	0	1.36326E-11	1.36326E-11	1.363E-05
3971253767839	397125	3767839	0	0	0	0	0	0	1.25927E-07	0	0	0	0	1.38832E-11	1.38832E-11	1.388E-05
3971753767839	397175	3767839	0	0	0	0	0	0	1.24263E-07	0	0	0	0	1.36997E-11	1.36997E-11	1.37E-05
3972253767839	397225	3767839	0	0	0	0	0	0	1.19468E-07	0	0	0	0	1.31711E-11	1.31711E-11	1.317E-05
3972753767839	397275	3767839	0	0	0	0	0	0	1.13171E-07	0	0	0	0	1.24769E-11	1.24769E-11	1.248E-05
3973253767839	397325	3767839	0	0	0	0	0	0	1.07894E-07	0	0	0	0	1.1895E-11	1.1895E-11	1.19E-05
3973753767839	397375	3767839	0	0	0	0	0	0	1.12239E-07	0	0	0	0	1.23741E-11	1.23741E-11	1.237E-05
3974753767839	397475	3767839	0	0	0	0	0	0	1.05798E-07	0	0	0	0	1.1664E-11	1.1664E-11	1.166E-05
3975253767839	397525	3767839	0	0	0	0	0	0	9.04213E-08	0	0	0	0	9.96874E-12	9.96874E-12	9.969E-06
3964253767889	396425	3767889	0	0	0	0	0	0	1.09465E-07	0	0	0	0	1.20682E-11	1.20682E-11	1.207E-05
3964753767889	396475	3767889	0	0	0	0	0	0	9.73195E-08	0	0	0	0	1.07293E-11	1.07293E-11	1.073E-05
3965253767889	396525	3767889	0	0	0	0	0	0	9.98772E-08	0	0	0	0	1.10112E-11	1.10112E-11	1.101E-05
3965753767889	396575	3767889	0	0	0	0	0	0	1.04401E-07	0	0	0	0	1.15099E-11	1.15099E-11	1.151E-05
3974753767889	397475	3767889	0	0	0	0	0	0	1.14784E-07	0	0	0	0	1.26547E-11	1.26547E-11	1.265E-05
3975253767889	397525	3767889	0	0	0	0	0	0	9.97465E-08	0	0	0	0	1.09968E-11	1.09968E-11	1.1E-05
3964253767939	396425	3767939	0	0	0	0	0	0	1.16207E-07	0	0	0	0	1.28116E-11	1.28116E-11	1.281E-05
3964753767939	396475	3767939	0	0	0	0	0	0	1.04453E-07	0	0	0	0	1.15157E-11	1.15157E-11	1.152E-05
3965253767939	396525	3767939	0	0	0	0	0	0	1.08194E-07	0	0	0	0	1.19282E-11	1.19282E-11	1.193E-05
3974753767939	397475	3767939	0	0	0	0	0	0	1.21961E-07	0	0	0	0	1.3446E-11	1.3446E-11	1.345E-05
3975253767939	397525	3767939	0	0	0	0	0	0	1.1149E-07	0	0	0	0	1.22915E-11	1.22915E-11	1.229E-05
3964253767989	396425	3767989	0	0	0	0	0	0	1.14007E-07	0	0	0	0	1.2569E-11	1.2569E-11	1.257E-05
3964753767989	396475	3767989	0	0	0	0	0	0	1.13513E-07	0	0	0	0	1.25146E-11	1.25146E-11	1.251E-05
3974753767989	397475	3767989	0	0	0	0	0	0	1.40162E-07	0	0	0	0	1.54525E-11	1.54525E-11	1.545E-05
3975253767989	397525	3767989	0	0	0	0	0	0	1.27033E-07	0	0	0	0	1.40051E-11	1.40051E-11	1.401E-05
3964253768039	396425	3768039	0	0	0	0	0	0	1.22905E-07	0	0	0	0	1.355E-11	1.355E-11	1.355E-05
3964753768039	396475	3768039	0	0	0	0	0	0	1.26995E-07	0	0	0	0	1.40009E-11	1.40009E-11	1.4E-05
3974753768039	397475	3768039	0	0	0	0	0	0	1.87124E-07	0	0	0	0	2.063E-11	2.063E-11	2.063E-05
3975253768039	397525	3768039	0	0	0	0	0	0	1.75103E-07	0	0	0	0	1.93047E-11	1.93047E-11	1.93E-05
3964253768089	396425	3768089	0	0	0	0	0	0	1.35536E-07	0	0	0	0	1.49425E-11	1.49425E-11	1.494E-05
3964753768089	396475	3768089	0	0	0	0	0	0	1.42454E-07	0	0	0	0	1.57052E-11	1.57052E-11	1.571E-05
3974753768089	397475	3768089	0	0	0	0	0	0	2.51867E-07	0	0	0	0	2.77678E-11	2.77678E-11	2.777E-05
3975253768089	397525	3768089	0	0	0	0	0	0	2.31961E-07	0	0	0	0	2.55732E-11	2.55732E-11	2.557E-05
3964253768139	396425	3768139	0	0	0	0	0	0	1.6877E-07	0	0	0	0	1.86065E-11	1.86065E-11	1.861E-05
3964753768139	396475	3768139	0	0	0	0	0	0	1.55458E-07	0	0	0	0	1.71389E-11	1.71389E-11	1.714E-05
3974253768139	397425	3768139	0	0	0	0	0	0	5.34334E-07	0	0	0	0	5.89091E-11	5.89091E-11	5.891E-05
3974753768139	397475	3768139	0	0	0	0	0	0	3.87108E-07	0	0	0	0	4.26777E-11	4.26777E-11	4.268E-05
3975253768139	397525	3768139	0	0	0	0	0	0	2.92081E-07	0	0	0	0	3.22013E-11	3.22013E-11	3.22E-05
3964253768189	396425	3768189	0	0	0	0	0	0	1.81825E-07	0	0	0	0	2.00457E-11	2.00457E-11	2.005E-05
3964753768189	396475	3768189	0	0	0	0	0	0	1.70179E-07	0	0	0	0	1.87619E-11	1.87619E-11	1.876E-05
3973753768189	397375	3768189	0	0	0	0	0	0	3.16724E-06	0	0	0	0	3.49181E-10	3.49181E-10	0.0003492

Garvey Reservoir Rehab - Unmitigated Standby Generator			Demolition - 2025	Demolition - 2026	Site Preparation - 2025	ite Preparation - 202	Grading - 2025	Grading - 2026	Infrastructure - 2025	nfrastructure - 2026	Paving - 2025	rchitectural Coating - 202	Child Risk			
Unique Identifier	X (UTM)	Y (UTM)	2025	1900	2025	2026	2026	1900	2026	1900	2026	1900	3rd Trimester	0<2	Total	per million
3974253768189	397425	3768189	0	0	0	0	0	0	9.14856E-07	0	0	0	0	1.00861E-10	1.00861E-10	0.0001009
3974753768189	397475	3768189	0	0	0	0	0	0	5.24195E-07	0	0	0	0	5.77913E-11	5.77913E-11	5.779E-05
3975253768189	397525	3768189	0	0	0	0	0	0	3.60921E-07	0	0	0	0	3.97907E-11	3.97907E-11	3.979E-05
3964253768239	396425	3768239	0	0	0	0	0	0	1.96791E-07	0	0	0	0	2.16958E-11	2.16958E-11	2.17E-05
3964753768239	396475	3768239	0	0	0	0	0	0	1.88175E-07	0	0	0	0	2.07458E-11	2.07458E-11	2.075E-05
3973753768239	397375	3768239	0	0	0	0	0	0	4.61395E-06	0	0	0	0	5.08677E-10	5.08677E-10	0.0005087
3974253768239	397425	3768239	0	0	0	0	0	0	1.17331E-06	0	0	0	0	1.29354E-10	1.29354E-10	0.0001294
3974753768239	397475	3768239	0	0	0	0	0	0	6.32611E-07	0	0	0	0	6.97439E-11	6.97439E-11	6.974E-05
3975253768239	397525	3768239	0	0	0	0	0	0	4.29129E-07	0	0	0	0	4.73104E-11	4.73104E-11	4.731E-05
3964253768289	396425	3768289	0	0	0	0	0	0	2.10651E-07	0	0	0	0	2.32238E-11	2.32238E-11	2.322E-05
3964753768289	396475	3768289	0	0	0	0	0	0	2.09652E-07	0	0	0	0	2.31137E-11	2.31137E-11	2.311E-05
3973253768289	397325	3768289	0	0	0	0	0	0	1.22233E-05	0	0	0	0	1.34759E-09	1.34759E-09	0.0013476
3973753768289	397375	3768289	0	0	0	0	0	0	3.23571E-06	0	0	0	0	3.56729E-10	3.56729E-10	0.0003567
3974253768289	397425	3768289	0	0	0	0	0	0	1.42608E-06	0	0	0	0	1.57223E-10	1.57223E-10	0.0001572
3974753768289	397475	3768289	0	0	0	0	0	0	7.86182E-07	0	0	0	0	8.66747E-11	8.66747E-11	8.667E-05
3975253768289	397525	3768289	0	0	0	0	0	0	5.10114E-07	0	0	0	0	5.62389E-11	5.62389E-11	5.624E-05
3964253768339	396425	3768339	0	0	0	0	0	0	2.38691E-07	0	0	0	0	2.63151E-11	2.63151E-11	2.632E-05
3964753768339	396475	3768339	0	0	0	0	0	0	2.3691E-07	0	0	0	0	2.61188E-11	2.61188E-11	2.612E-05
3965253768339	396525	3768339	0	0	0	0	0	0	2.52547E-07	0	0	0	0	2.78427E-11	2.78427E-11	2.784E-05
3972753768339	397275	3768339	0	0	0	0	0	0	9.93064E-06	0	0	0	0	1.09483E-09	1.09483E-09	0.0010948
3973253768339	397325	3768339	0	0	0	0	0	0	7.32089E-06	0	0	0	0	8.07111E-10	8.07111E-10	0.0008071
3973753768339	397375	3768339	0	0	0	0	0	0	2.6966E-06	0	0	0	0	2.97294E-10	2.97294E-10	0.0002973
3974253768339	397425	3768339	0	0	0	0	0	0	1.41789E-06	0	0	0	0	1.56319E-10	1.56319E-10	0.0001563
3974753768339	397475	3768339	0	0	0	0	0	0	8.52659E-07	0	0	0	0	9.40037E-11	9.40037E-11	9.4E-05
3975253768339	397525	3768339	0	0	0	0	0	0	5.66484E-07	0	0	0	0	6.24535E-11	6.24535E-11	6.245E-05
3964253768389	396425	3768389	0	0	0	0	0	0	2.65247E-07	0	0	0	0	2.92428E-11	2.92428E-11	2.924E-05
3964753768389	396475	3768389	0	0	0	0	0	0	2.69992E-07	0	0	0	0	2.9766E-11	2.9766E-11	2.977E-05
3965253768389	396525	3768389	0	0	0	0	0	0	2.82988E-07	0	0	0	0	3.11988E-11	3.11988E-11	3.12E-05
3972253768389	397225	3768389	0	0	0	0	0	0	2.38731E-06	0	0	0	0	2.63195E-10	2.63195E-10	0.0002632
3972753768389	397275	3768389	0	0	0	0	0	0	9.45567E-06	0	0	0	0	1.04247E-09	1.04247E-09	0.0010425
3973253768389	397325	3768389	0	0	0	0	0	0	7.32333E-06	0	0	0	0	8.07381E-10	8.07381E-10	0.0008074
3973753768389	397375	3768389	0	0	0	0	0	0	2.59588E-06	0	0	0	0	2.8619E-10	2.8619E-10	0.0002862
3974253768389	397425	3768389	0	0	0	0	0	0	1.42028E-06	0	0	0	0	1.56583E-10	1.56583E-10	0.0001566
3974753768389	397475	3768389	0	0	0	0	0	0	8.98111E-07	0	0	0	0	9.90147E-11	9.90147E-11	9.901E-05
3975253768389	397525	3768389	0	0	0	0	0	0	6.16887E-07	0	0	0	0	6.80104E-11	6.80104E-11	6.801E-05
3964253768439	396425	3768439	0	0	0	0	0	0	3.01042E-07	0	0	0	0	3.31892E-11	3.31892E-11	3.319E-05
3964753768439	396475	3768439	0	0	0	0	0	0	3.10017E-07	0	0	0	0	3.41787E-11	3.41787E-11	3.418E-05
3965253768439	396525	3768439	0	0	0	0	0	0	3.21193E-07	0	0	0	0	3.54108E-11	3.54108E-11	3.541E-05
3971753768439	397175	3768439	0	0	0	0	0	0	1.28612E-06	0	0	0	0	1.41792E-10	1.41792E-10	0.0001418
3972253768439	397225	3768439	0	0	0	0	0	0	2.50443E-06	0	0	0	0	2.76107E-10	2.76107E-10	0.0002761
3972753768439	397275	3768439	0	0	0	0	0	0	9.50244E-06	0	0	0	0	1.04762E-09	1.04762E-09	0.0010476
3973253768439	397325	3768439	0	0	0	0	0	0	7.1501E-06	0	0	0	0	7.88283E-10	7.88283E-10	0.0007883
3973753768439	397375	3768439	0	0	0	0	0	0	2.39955E-06	0	0	0	0	2.64545E-10	2.64545E-10	0.0002645
3974253768439	397425	3768439	0	0	0	0	0	0	1.31306E-06	0	0	0	0	1.44762E-10	1.44762E-10	0.0001448
3974753768439	397475	3768439	0	0	0	0	0	0	9.29808E-07	0	0	0	0	1.02509E-10	1.02509E-10	0.0001025
3975253768439	397525	3768439	0	0	0	0	0	0	6.52985E-07	0	0	0	0	7.19901E-11	7.19901E-11	7.199E-05
3964253768489	396425	3768489	0	0	0	0	0	0	3.43383E-07	0	0	0	0	3.78572E-11	3.78572E-11	3.786E-05
3964753768489	396475	3768489	0	0	0	0	0	0	3.58047E-07	0	0	0	0	3.94738E-11	3.94738E-11	3.947E-05
3965253768489	396525	3768489	0	0	0	0	0	0	3.7197E-07	0	0	0	0	4.10089E-11	4.10089E-11	4.101E-05
3970753768489	397075	3768489	0	0	0	0	0	0	7.32546E-07	0	0	0	0	8.07616E-11	8.07616E-11	8.076E-05
3971253768489	397125	3768489	0	0	0	0	0	0	9.30641E-07	0	0	0	0	1.02601E-10	1.02601E-10	0.0001026
3971753768489	397175	3768489	0	0	0	0	0	0	1.34596E-06	0	0	0	0	1.48389E-10	1.48389E-10	0.0001484
3972253768489	397225	3768489	0	0	0	0	0	0	2.48988E-06	0	0	0	0	2.74503E-10	2.74503E-10	0.0002745
3972753768489	397275	3768489	0	0	0	0	0	0	9.32927E-06	0	0	0	0	1.02853E-09	1.02853E-09	0.0010285
3973253768489	397325	3768489	0	0	0	0	0	0	6.17087E-06	0	0	0	0	6.80324E-10	6.80324E-10	0.0006803
3973753768489	397375	3768489	0	0	0	0	0	0	2.36365E-06	0	0	0	0	2.60587E-10	2.60587E-10	0.0002606
3974253768489	397425	3768489	0	0	0	0	0	0	1.30462E-06	0	0	0	0	1.43831E-10	1.43831E-10	0.0001438
3974753768489	397475	3768489	0	0	0	0	0	0	8.13122E-07	0	0	0	0	8.96448E-11	8.96448E-11	8.964E-05
3975253768489	397525	3768489	0	0	0	0	0	0	5.89061E-07	0	0	0	0	6.49427E-11	6.49427E-11	6.494E-05
3964253768539	396425	3768539	0	0	0	0	0	0	3.99334E-07	0	0	0	0	4.40256E-11	4.40256E-11	4.403E-05
3964753768539	396475	3768539	0	0	0	0	0	0	4.21103E-07	0	0	0	0	4.64257E-11	4.64257E-11	4.643E-05
3965253768539	396525	3768539	0	0	0	0	0	0	4.3514E-07	0	0	0	0	4.79732E-11	4.79732E-11	4.797E-05
3965753768539	396575	3768539	0	0	0	0	0	0	4.18776E-07	0	0	0	0	4.61691E-11	4.61691E-11	4.617E-05
3970253768539	397025	3768539	0	0	0	0	0	0	6.92943E-07	0	0	0	0	7.63954E-11	7.63954E-11	7.64E-05
3970753768539	397075	3768539	0	0	0	0	0	0	8.10826E-07	0	0	0	0	8.93917E-11	8.93917E-11	8.939E-05
3971253768539	397125	3768539	0	0	0	0	0	0	1.0188E-06	0	0	0	0	1.12321E-10	1.12321E-10	0.0001123
3971753768539	397175	3768539	0	0	0	0	0	0	1.45466E-06	0	0	0	0	1.60373E-10	1.60373E-10	0.0001604
3972253768539	397225	3768539	0	0	0	0	0	0	2.55131E-06	0	0	0	0	2.81276E-10	2.81276E-10	0.0002813
3972753768539	397275	3768539	0	0	0	0	0	0	8.49806E-06	0	0	0	0	9.36891E-10	9.36891E-10	0.0009369
3973253768539	397325	3768539	0	0	0	0	0	0	5.95109E-06	0	0	0	0	6.56094E-10	6.56094E-10	0.0006561
3973753768539	397375	3768539	0	0	0	0	0	0	2.38068E-06	0	0	0	0	2.62465E-10	2.62465E-10	0.0002625

Garvey Reservoir Rehab - Unmitigated Standby Generator			Demolition - 2025	Demolition - 2026	Site Preparation - 2025	ite Preparation - 202	Grading - 2025	Grading - 2026	Infrastructure - 2025	nfrastructure - 2026	Paving - 2025	rchitectural Coating - 202	Child Risk			
Unique Identifier	X (UTM)	Y (UTM)	2025	1900	2025	2026	2026	1900	2026	1900	2026	1900	3rd Trimester	0<2	Total	per million
3974253768539	397425	3768539	0	0	0	0	0	0	1.27506E-06	0	0	0	0	1.40572E-10	1.40572E-10	0.0001406
3974753768539	397475	3768539	0	0	0	0	0	0	8.22485E-07	0	0	0	0	9.06771E-11	9.06771E-11	9.068E-05
3975253768539	397525	3768539	0	0	0	0	0	0	5.85696E-07	0	0	0	0	6.45716E-11	6.45716E-11	6.457E-05
3964253768589	396425	3768589	0	0	0	0	0	0	4.66023E-07	0	0	0	0	5.1378E-11	5.1378E-11	5.138E-05
3964753768589	396475	3768589	0	0	0	0	0	0	5.05701E-07	0	0	0	0	5.57524E-11	5.57524E-11	5.575E-05
3965253768589	396525	3768589	0	0	0	0	0	0	5.03894E-07	0	0	0	0	5.55532E-11	5.55532E-11	5.555E-05
3965753768589	396575	3768589	0	0	0	0	0	0	4.86158E-07	0	0	0	0	5.35978E-11	5.35978E-11	5.36E-05
3966253768589	396625	3768589	0	0	0	0	0	0	4.80616E-07	0	0	0	0	5.29868E-11	5.29868E-11	5.299E-05
3968253768589	396825	3768589	0	0	0	0	0	0	5.92152E-07	0	0	0	0	6.52834E-11	6.52834E-11	6.528E-05
3968753768589	396875	3768589	0	0	0	0	0	0	6.27671E-07	0	0	0	0	6.91993E-11	6.91993E-11	6.92E-05
3969253768589	396925	3768589	0	0	0	0	0	0	6.81768E-07	0	0	0	0	7.51634E-11	7.51634E-11	7.516E-05
3969753768589	396975	3768589	0	0	0	0	0	0	7.31863E-07	0	0	0	0	8.06862E-11	8.06862E-11	8.069E-05
3970253768589	397025	3768589	0	0	0	0	0	0	8.05111E-07	0	0	0	0	8.87616E-11	8.87616E-11	8.876E-05
3970753768589	397075	3768589	0	0	0	0	0	0	9.14589E-07	0	0	0	0	1.00831E-10	1.00831E-10	0.0001008
3971253768589	397125	3768589	0	0	0	0	0	0	1.14892E-06	0	0	0	0	1.26666E-10	1.26666E-10	0.0001267
3971753768589	397175	3768589	0	0	0	0	0	0	1.62855E-06	0	0	0	0	1.79544E-10	1.79544E-10	0.0001795
3972253768589	397225	3768589	0	0	0	0	0	0	2.84832E-06	0	0	0	0	3.1402E-10	3.1402E-10	0.000314
3972753768589	397275	3768589	0	0	0	0	0	0	9.07695E-06	0	0	0	0	1.00071E-09	1.00071E-09	0.0010007
3973253768589	397325	3768589	0	0	0	0	0	0	5.91009E-06	0	0	0	0	6.51574E-10	6.51574E-10	0.0006516
3973753768589	397375	3768589	0	0	0	0	0	0	2.38013E-06	0	0	0	0	2.62404E-10	2.62404E-10	0.0002624
3974253768589	397425	3768589	0	0	0	0	0	0	1.23782E-06	0	0	0	0	1.36467E-10	1.36467E-10	0.0001365
3974753768589	397475	3768589	0	0	0	0	0	0	8.16547E-07	0	0	0	0	9.00224E-11	9.00224E-11	9.002E-05
3975253768589	397525	3768589	0	0	0	0	0	0	5.90625E-07	0	0	0	0	6.5115E-11	6.5115E-11	6.512E-05
3964253768639	396425	3768639	0	0	0	0	0	0	5.61717E-07	0	0	0	0	6.1928E-11	6.1928E-11	6.193E-05
3964753768639	396475	3768639	0	0	0	0	0	0	6.36065E-07	0	0	0	0	7.01247E-11	7.01247E-11	7.012E-05
3965253768639	396525	3768639	0	0	0	0	0	0	5.97717E-07	0	0	0	0	6.58969E-11	6.58969E-11	6.59E-05
3965753768639	396575	3768639	0	0	0	0	0	0	6.01335E-07	0	0	0	0	6.62958E-11	6.62958E-11	6.63E-05
3966253768639	396625	3768639	0	0	0	0	0	0	6.1207E-07	0	0	0	0	6.74793E-11	6.74793E-11	6.748E-05
3966753768639	396675	3768639	0	0	0	0	0	0	6.24843E-07	0	0	0	0	6.88874E-11	6.88874E-11	6.889E-05
3967253768639	396725	3768639	0	0	0	0	0	0	6.44125E-07	0	0	0	0	7.10133E-11	7.10133E-11	7.101E-05
3967753768639	396775	3768639	0	0	0	0	0	0	6.79063E-07	0	0	0	0	7.48651E-11	7.48651E-11	7.487E-05
3968253768639	396825	3768639	0	0	0	0	0	0	7.12615E-07	0	0	0	0	7.85642E-11	7.85642E-11	7.856E-05
3968753768639	396875	3768639	0	0	0	0	0	0	7.64108E-07	0	0	0	0	8.42411E-11	8.42411E-11	8.424E-05
3969253768639	396925	3768639	0	0	0	0	0	0	8.22071E-07	0	0	0	0	9.06314E-11	9.06314E-11	9.063E-05
3969753768639	396975	3768639	0	0	0	0	0	0	8.73162E-07	0	0	0	0	9.62641E-11	9.62641E-11	9.626E-05
3970253768639	397025	3768639	0	0	0	0	0	0	9.42057E-07	0	0	0	0	1.0386E-10	1.0386E-10	0.0001039
3970753768639	397075	3768639	0	0	0	0	0	0	1.04547E-06	0	0	0	0	1.1526E-10	1.1526E-10	0.0001153
3971253768639	397125	3768639	0	0	0	0	0	0	1.2571E-06	0	0	0	0	1.38593E-10	1.38593E-10	0.0001386
3971753768639	397175	3768639	0	0	0	0	0	0	1.8391E-06	0	0	0	0	2.02757E-10	2.02757E-10	0.0002028
3972253768639	397225	3768639	0	0	0	0	0	0	3.62446E-06	0	0	0	0	3.99588E-10	3.99588E-10	0.0003996
3972753768639	397275	3768639	0	0	0	0	0	0	1.26254E-05	0	0	0	0	1.39192E-09	1.39192E-09	0.0013919
3973253768639	397325	3768639	0	0	0	0	0	0	5.3237E-06	0	0	0	0	5.86925E-10	5.86925E-10	0.0005869
3973753768639	397375	3768639	0	0	0	0	0	0	2.34555E-06	0	0	0	0	2.58592E-10	2.58592E-10	0.0002586
3974253768639	397425	3768639	0	0	0	0	0	0	1.36722E-06	0	0	0	0	1.50733E-10	1.50733E-10	0.0001507
3974753768639	397475	3768639	0	0	0	0	0	0	8.11605E-07	0	0	0	0	8.94776E-11	8.94776E-11	8.948E-05
3975253768639	397525	3768639	0	0	0	0	0	0	5.96383E-07	0	0	0	0	6.57499E-11	6.57499E-11	6.575E-05
3964253768689	396425	3768689	0	0	0	0	0	0	7.24038E-07	0	0	0	0	7.98236E-11	7.98236E-11	7.982E-05
3964753768689	396475	3768689	0	0	0	0	0	0	8.58881E-07	0	0	0	0	9.46896E-11	9.46896E-11	9.469E-05
3965253768689	396525	3768689	0	0	0	0	0	0	8.91452E-07	0	0	0	0	9.82805E-11	9.82805E-11	9.828E-05
3965753768689	396575	3768689	0	0	0	0	0	0	8.76162E-07	0	0	0	0	9.65948E-11	9.65948E-11	9.659E-05
3966253768689	396625	3768689	0	0	0	0	0	0	8.86462E-07	0	0	0	0	9.77304E-11	9.77304E-11	9.773E-05
3966753768689	396675	3768689	0	0	0	0	0	0	8.80542E-07	0	0	0	0	9.70778E-11	9.70778E-11	9.708E-05
3967253768689	396725	3768689	0	0	0	0	0	0	8.95219E-07	0	0	0	0	9.86958E-11	9.86958E-11	9.87E-05
3967753768689	396775	3768689	0	0	0	0	0	0	9.08079E-07	0	0	0	0	1.00114E-10	1.00114E-10	0.0001001
3968253768689	396825	3768689	0	0	0	0	0	0	9.5723E-07	0	0	0	0	1.05532E-10	1.05532E-10	0.0001055
3968753768689	396875	3768689	0	0	0	0	0	0	1.00822E-06	0	0	0	0	1.11154E-10	1.11154E-10	0.0001112
3969253768689	396925	3768689	0	0	0	0	0	0	1.05176E-06	0	0	0	0	1.15954E-10	1.15954E-10	0.000116
3969753768689	396975	3768689	0	0	0	0	0	0	1.09665E-06	0	0	0	0	1.20903E-10	1.20903E-10	0.0001209
3970253768689	397025	3768689	0	0	0	0	0	0	1.15927E-06	0	0	0	0	1.27807E-10	1.27807E-10	0.0001278
3970753768689	397075	3768689	0	0	0	0	0	0	1.27162E-06	0	0	0	0	1.40193E-10	1.40193E-10	0.0001402
3971253768689	397125	3768689	0	0	0	0	0	0	1.48498E-06	0	0	0	0	1.63715E-10	1.63715E-10	0.0001637
3971753768689	397175	3768689	0	0	0	0	0	0	2.07075E-06	0	0	0	0	2.28295E-10	2.28295E-10	0.0002283
3972253768689	397225	3768689	0	0	0	0	0	0	4.69595E-06	0	0	0	0	5.17718E-10	5.17718E-10	0.0005177
3972753768689	397275	3768689	0	0	0	0	0	0	1.28985E-05	0	0	0	0	1.42203E-09	1.42203E-09	0.001422
3973253768689	397325	3768689	0	0	0	0	0	0	4.31696E-06	0	0	0	0	4.75935E-10	4.75935E-10	0.0004759
3973753768689	397375	3768689	0	0	0	0	0	0	2.18547E-06	0	0	0	0	2.40943E-10	2.40943E-10	0.0002409
3974253768689	397425	3768689	0	0	0	0	0	0	1.36516E-06	0	0	0	0	1.50506E-10	1.50506E-10	0.0001505
3974753768689	397475	3768689	0	0	0	0	0	0	9.31649E-07	0	0	0	0	1.02712E-10	1.02712E-10	0.0001027
3975253768689	397525	3768689	0	0	0	0	0	0	6.76177E-07	0	0	0	0	7.45469E-11	7.45469E-11	7.455E-05

Garvey Reservoir Rehab - Unmitigated Standby Generator

Maximum Individual Non-Cancer Impact Calculations - Sensitive Receptors (Maximum Impacted Senior Residential Receptor) (IMPACT AT ALL OTHER LOCATIONS ON THE PROJECT SITE WOULD BE LESS THAN SHOWN)

Maximum Non-cancer Chronic Hazards / Toxicological Endpoints*

Receptor Group	Pollutant	CREL[1]	CONC	WFrac	$CONC_{WF}$	HI		ALIM	BN	CVS	DEV	ENDC	EYE	HEM	IMMUN	KIDN	NS	REPRO	RESP	SK
Project:																				
MEI - Max	DPM	5.00E+00	3.00E-01	1.00E+00	3.00E-01	0.060		-	-	-	-	-	-	-	-	-	-	-	5.99E-02	-
							Total Risk				-			-				-	0.060	
							Threshold				1.00			1.00				1.00	1.00	
							Over?				NO			NO				NO	NO	

Notes:

1. California Air Resources Board, "Consolidated Table of OEHHA/ARB Approved Risk Assessment Health Values," "OEHHA/ARB Approved Chronic Reference Exposure Levels and Target Organs," "OEHHA/ARB Approved Acute Reference Exposure Levels and Target Organs," and "OEHHA/ARB Approved 8-Hour Reference Exposure Levels and Target Organs," http://www.arb.ca.gov/toxics/healthval/healthval.htm. Tables last updated: May 8, 2018. Downloaded: 08/14/18.

Source: ESA, 2020

Where:

$CONC_{WF}$	Pollutant Concentration ($\mu g/m^3$) multiplied by the weight fraction
CREL	Chronic Reference Exposure Level
HI	Hazard Index
MEI	Maximally Exposed Individual
WFrac	Weight fraction of speciated component

* Key to Toxicological Endpoints

ALIM	Alimentary Tract	EYE	Eye	NS	Nervous System
BN	Bone	HEM	Hematologic System	REPRO	Reproductive System
CVS	Cardiovascular System	IMMUN	Immune System	RESP	Respiratory System
DEV	Developmental System	KIDN	Kidney	SK	Skin
ENDC	Endocrine System				

Garvey Reservoir Rehab - Mitigated Standby Generator

Cancer Risk Summary & Maximum Annual GLC for Chronic Calculations

Cancer Risk Summary

Max Risk: 1.126314

XY	X	Y	Offroad Risk	Haul Risk	Total Risk
7449041451	574490	4145130	0.002824545	5.32037E-06	0.00283
7448041451	574480	4145140	0.003130072	5.44099E-06	0.003136
7449041451	574490	4145140	0.003589423	5.66228E-06	0.003595
7449041451	574490	4145150	0.004070647	5.80981E-06	0.004076
7450041451	574500	4145150	0.004668296	6.36914E-06	0.004675
7446041451	574460	4145160	0.00519115	6.02167E-06	0.005197
7449041451	574490	4145160	0.005646267	5.99805E-06	0.005652
7450041451	574500	4145160	0.006133136	6.00331E-06	0.006139
7451041451	574510	4145160	0.006730785	6.08274E-06	0.006737
7446041451	574460	4145170	0.007116752	5.92935E-06	0.007123
7447041451	574470	4145170	0.007212009	5.84824E-06	0.007218
7448041451	574480	4145170	0.007080766	5.85529E-06	0.007087
7449041451	574490	4145170	0.007066654	5.58838E-06	0.007072
7450041451	574500	4145170	0.00690013	5.03099E-06	0.006905
7451041451	574510	4145170	0.006502874	4.94864E-06	0.006508
7452041451	574520	4145170	0.00601036	4.80339E-06	0.006015
7446041451	574460	4145180	0.005348501	4.95727E-06	0.005353
7447041451	574470	4145180	0.004784721	4.72182E-06	0.004789
7448041451	574480	4145180	0.002985423	6.12254E-06	0.002992
7449041451	574490	4145180	0.003297301	5.98237E-06	0.003303
7450041451	574500	4145180	0.003846969	6.3026E-06	0.003853
7451041451	574510	4145180	0.004458025	6.90293E-06	0.004465
7452041451	574520	4145180	0.005157987	6.99673E-06	0.005165
7453041451	574530	4145180	0.005897463	6.79357E-06	0.005904
7445041451	574450	4145190	0.006683509	6.84671E-06	0.00669
7446041451	574460	4145190	0.007521065	6.88669E-06	0.007528
7447041451	574470	4145190	0.00851597	6.98921E-06	0.008523
7448041451	574480	4145190	0.009276615	6.85489E-06	0.009283
7449041451	574490	4145190	0.009601899	6.639E-06	0.009609
7450041451	574500	4145190	0.00952146	6.66093E-06	0.009528
7451041451	574510	4145190	0.009344353	6.46056E-06	0.009351
7452041451	574520	4145190	0.009067755	5.82715E-06	0.009074
7444041452	574440	4145200	0.008412952	5.52622E-06	0.008418
7445041452	574450	4145200	0.007569751	5.40502E-06	0.007575
7446041452	574460	4145200	0.006671514	5.27665E-06	0.006677
7447041452	574470	4145200	0.005816318	5.07826E-06	0.005821
7448041452	574480	4145200	0.003084914	6.45395E-06	0.003091
7449041452	574490	4145200	0.003474409	6.63459E-06	0.003481
7450041452	574500	4145200	0.004036072	6.9389E-06	0.004043
7451041452	574510	4145200	0.004767081	7.36805E-06	0.004774
7443041452	574430	4145210	0.005682253	8.18465E-06	0.00569
7444041452	574440	4145210	0.006784411	8.31064E-06	0.006793
7445041452	574450	4145210	0.007782139	7.83671E-06	0.00779
7446041452	574460	4145210	0.00933518	8.0343E-06	0.009343
7447041452	574470	4145210	0.010929146	8.14418E-06	0.010937
7448041452	574480	4145210	0.01238693	8.14614E-06	0.012395
7449041452	574490	4145210	0.013380425	7.84557E-06	0.013388
7450041452	574500	4145210	0.013532836	7.74156E-06	0.013541
7451041452	574510	4145210	0.013153925	7.54862E-06	0.013161
7443041452	574430	4145220	0.012593673	6.72425E-06	0.0126
7444041452	574440	4145220	0.011332753	6.3426E-06	0.011339
7445041452	574450	4145220	0.009848862	5.99762E-06	0.009855
7446041452	574460	4145220	0.008360737	5.76963E-06	0.008367
7447041452	574470	4145220	0.007039135	5.48474E-06	0.007045
7448041452	574480	4145220	0.003204161	7.81431E-06	0.003212
7449041452	574490	4145220	0.003640226	7.39348E-06	0.003648
7450041452	574500	4145220	0.004275273	7.87843E-06	0.004283
7451041452	574510	4145220	0.005122001	9.31872E-06	0.005131
7452041452	574520	4145220	0.006166299	9.40324E-06	0.006176
7453041452	574530	4145220	0.007331256	8.80852E-06	0.00734
7444041452	574440	4145230	0.009149605	9.16993E-06	0.009159
7445041452	574450	4145230	0.011706019	9.68522E-06	0.011716

Max GLC for Chronic Calcs

Max GLC: 0.019104

XY	X	Y	2025	2026	2027	2034	2035
57449041451	574490	4145130	1.513E-05	4.796E-05	0		
57448041451	574480	4145140	1.677E-05	5.315E-05	0		
57449041451	574490	4145140	1.923E-05	6.094E-05	0		
57449041451	574490	4145150	2.181E-05	6.911E-05	0		
57450041451	574500	4145150	2.501E-05	7.925E-05	0		
57446041451	574460	4145160	2.781E-05	8.812E-05	0		
57449041451	574490	4145160	3.025E-05	9.584E-05	0		
57450041451	574500	4145160	3.286E-05	0.0001041	0		
57451041451	574510	4145160	3.606E-05	0.0001142	0		
57446041451	574460	4145170	3.812E-05	0.0001208	0		
57447041451	574470	4145170	3.863E-05	0.0001224	0		
57448041451	574480	4145170	3.793E-05	0.0001202	0		
57449041451	574490	4145170	3.786E-05	0.0001199	0		
57450041451	574500	4145170	3.696E-05	0.0001171	0		
57451041451	574510	4145170	3.484E-05	0.0001104	0		
57452041451	574520	4145170	3.22E-05	0.000102	0		
57446041451	574460	4145180	2.865E-05	9.078E-05	0		
57447041451	574470	4145180	2.563E-05	8.121E-05	0		
57448041451	574480	4145180	1.599E-05	5.07E-05	0		
57449041451	574490	4145180	1.766E-05	5.599E-05	0		
57450041451	574500	4145180	2.061E-05	6.532E-05	0		
57451041451	574510	4145180	2.388E-05	7.569E-05	0		
57452041451	574520	4145180	2.763E-05	8.756E-05	0		
57453041451	574530	4145180	3.159E-05	0.0001001	0		
57445041451	574450	4145190	3.58E-05	0.0001134	0		
57446041451	574460	4145190	4.029E-05	0.0001276	0		
57447041451	574470	4145190	4.562E-05	0.0001445	0		
57448041451	574480	4145190	4.969E-05	0.0001574	0		
57449041451	574490	4145190	5.144E-05	0.0001629	0		
57450041451	574500	4145190	5.101E-05	0.0001616	0		
57451041451	574510	4145190	5.006E-05	0.0001586	0		
57452041451	574520	4145190	4.858E-05	0.0001539	0		
57444041452	574440	4145200	4.507E-05	0.0001428	0		
57445041452	574450	4145200	4.055E-05	0.0001285	0		
57446041452	574460	4145200	3.574E-05	0.0001132	0		
57447041452	574470	4145200	3.116E-05	9.871E-05	0		
57448041452	574480	4145200	1.653E-05	5.239E-05	0		
57449041452	574490	4145200	1.861E-05	5.9E-05	0		
57450041452	574500	4145200	2.162E-05	6.853E-05	0		
57451041452	574510	4145200	2.554E-05	8.093E-05	0		
57443041452	574430	4145210	3.044E-05	9.647E-05	0		
57444041452	574440	4145210	3.634E-05	0.0001152	0		
57445041452	574450	4145210	4.169E-05	0.0001321	0		
57446041452	574460	4145210	5.001E-05	0.0001584	0		
57447041452	574470	4145210	5.855E-05	0.0001855	0		
57448041452	574480	4145210	6.636E-05	0.0002102	0		
57449041452	574490	4145210	7.168E-05	0.0002271	0		
57450041452	574500	4145210	7.25E-05	0.0002296	0		
57451041452	574510	4145210	7.047E-05	0.0002232	0		
57443041452	574430	4145220	6.746E-05	0.0002137	0		
57444041452	574440	4145220	6.071E-05	0.0001923	0		
57445041452	574450	4145220	5.276E-05	0.0001671	0		
57446041452	574460	4145220	4.479E-05	0.0001419	0		
57447041452	574470	4145220	3.771E-05	0.0001195	0		
57448041452	574480	4145220	1.716E-05	5.443E-05	0		
57449041452	574490	4145220	1.95E-05	6.182E-05	0		
57450041452	574500	4145220	2.29E-05	7.26E-05	0		
57451041452	574510	4145220	2.744E-05	8.697E-05	0		
57452041452	574520	4145220	3.303E-05	0.0001047	0		
57453041452	574530	4145220	3.927E-05	0.0001244	0		
57444041452	574440	4145230	4.901E-05	0.0001553	0		
57445041452	574450	4145230	6.271E-05	0.0001987	0		

Garvey Reservoir Rehab - Mitigated Standby Generator

Cancer Risk Summary & Maximum Annual GLC for Chronic Calculations

Cancer Risk Summary

Max Risk: 1.126314

XY	X	Y	Offroad Risk	Haul Risk	Total Risk
7446041452:	574460	4145230	0.014733073	9.79065E-06	0.014743
7447041452:	574470	4145230	0.017539272	9.76118E-06	0.017549
7448041452:	574480	4145230	0.01985084	9.54526E-06	0.01986
7449041452:	574490	4145230	0.02115198	8.75346E-06	0.021161
7450041452:	574500	4145230	0.020296784	8.90411E-06	0.020306
7451041452:	574510	4145230	0.018831238	7.65802E-06	0.018839
7452041452:	574520	4145230	0.016092778	7.34737E-06	0.0161
7444041452	574440	4145240	0.013184266	6.9193E-06	0.013191
7445041452	574450	4145240	0.010610917	6.45907E-06	0.010617
7446041452	574460	4145240	0.00851597	6.14675E-06	0.008522
7447041452	574470	4145240	0.003283189	8.77009E-06	0.003292
7448041452	574480	4145240	0.003817334	9.96282E-06	0.003827
7449041452	574490	4145240	0.004473548	9.69632E-06	0.004483
7450041452	574500	4145240	0.005367552	1.02367E-05	0.005378
7451041452	574510	4145240	0.006471121	9.69203E-06	0.006481
7445041452	574450	4145250	0.008064382	1.01931E-05	0.008075
7446041452	574460	4145250	0.010615151	1.11726E-05	0.010626
7447041452	574470	4145250	0.014311826	1.19314E-05	0.014324
7448041452	574480	4145250	0.019410542	1.17851E-05	0.019422
7446041452	574460	4145260	0.025789229	1.18012E-05	0.025801
7447041452	574470	4145260	0.032169327	1.18174E-05	0.032181
7448041452	574480	4145260	0.036713435	1.09949E-05	0.036724
7447041452	574470	4145270	0.035746754	1.07817E-05	0.035758
7449041451	574490	4145130	0.031043884	9.30424E-06	0.031053
7448041451	574480	4145140	0.024247477	8.58269E-06	0.024256
7449041451	574490	4145140	0.018132687	8.16797E-06	0.018141
7449041451	574490	4145150	0.013560354	7.2929E-06	0.013568
7450041451	574500	4145150	0.010330791	6.64889E-06	0.010337
7446041451	574460	4145160	0.003332582	9.69254E-06	0.003342
7449041451	574490	4145160	0.003893539	1.11951E-05	0.003905
7450041451	574500	4145160	0.004612553	1.18341E-05	0.004624
7451041451	574510	4145160	0.005535487	1.12293E-05	0.005547
7446041451	574460	4145170	0.006777355	1.11141E-05	0.006788
7447041451	574470	4145170	0.058909713	1.30304E-05	0.058923
7448041451	574480	4145170	0.037481841	1.02634E-05	0.037492
7449041451	574490	4145170	0.022961861	8.65174E-06	0.022971
7450041451	574500	4145170	0.015860633	7.65824E-06	0.015868
7451041451	574510	4145170	0.01227615	7.67094E-06	0.012284
7452041451	574520	4145170	0.003332582	1.01594E-05	0.003343
7446041451	574460	4145180	0.003914707	1.17402E-05	0.003926
7447041451	574470	4145180	0.004655595	1.26983E-05	0.004668
7448041451	574480	4145180	0.005596874	1.22006E-05	0.005609
7449041451	574490	4145180	0.115721657	1.53677E-05	0.115737
7450041451	574500	4145180	0.053129381	1.24104E-05	0.053142
7451041451	574510	4145180	0.029147212	1.03011E-05	0.029158
7452041451	574520	4145180	0.021027087	1.03765E-05	0.021037
7453041451	574530	4145180	0.013986541	9.48914E-06	0.013996
7445041451	574450	4145190	0.003361512	1.36958E-05	0.003375
7446041451	574460	4145190	0.003896362	1.29799E-05	0.003909
7447041451	574470	4145190	0.004634426	1.40854E-05	0.004649
7448041451	574480	4145190	0.005642739	1.52479E-05	0.005658
7449041451	574490	4145190	0.29114613	2.66687E-05	0.291173
7450041451	574500	4145190	0.094506878	2.10752E-05	0.094528
7451041451	574510	4145190	0.043843594	1.58116E-05	0.043859
7452041451	574520	4145190	0.025132308	1.23456E-05	0.025145
7444041452	574440	4145200	0.016099128	1.07008E-05	0.01611
7445041452	574450	4145200	0.003331876	1.65178E-05	0.003348
7446041452	574460	4145200	0.003875193	1.70603E-05	0.003892
7447041452	574470	4145200	0.00460338	1.85721E-05	0.004622
7448041452	574480	4145200	0.005563005	1.82872E-05	0.005581
7449041452	574490	4145200	0.383226426	5.83239E-05	0.383285
7450041452	574500	4145200	0.118007118	3.05951E-05	0.118038

Max GLC for Chronic Calcs

Max GLC: 0.019104

XY	X	Y	2025	2026	2027	2034	2035
57446041452:	574460	4145230	7.892E-05	0.00025	0		
57447041452:	574470	4145230	9.396E-05	0.0002976	0		
57448041452:	574480	4145230	0.0001063	0.0003368	0		
57449041452:	574490	4145230	0.0001133	0.0003589	0		
57450041452:	574500	4145230	0.0001087	0.0003444	0		
57451041452:	574510	4145230	0.0001009	0.0003195	0		
57452041452:	574520	4145230	8.621E-05	0.0002731	0		
57444041452	574440	4145240	7.063E-05	0.0002237	0		
57445041452	574450	4145240	5.684E-05	0.0001801	0		
57446041452	574460	4145240	4.562E-05	0.0001445	0		
57447041452	574470	4145240	1.759E-05	5.577E-05	0		
57448041452	574480	4145240	2.045E-05	6.485E-05	0		
57449041452	574490	4145240	2.396E-05	7.598E-05	0		
57450041452	574500	4145240	2.875E-05	9.115E-05	0		
57451041452	574510	4145240	3.467E-05	0.0001099	0		
57445041452	574450	4145250	4.32E-05	0.0001369	0		
57446041452	574460	4145250	5.687E-05	0.0001802	0		
57447041452	574470	4145250	7.667E-05	0.0002429	0		
57448041452	574480	4145250	0.000104	0.0003294	0		
57446041452	574460	4145260	0.0001382	0.0004376	0		
57447041452	574470	4145260	0.0001723	0.0005458	0		
57448041452	574480	4145260	0.0001967	0.0006229	0		
57447041452	574470	4145270	0.0001915	0.0006065	0		
57449041451	574490	4145130	0.0001663	0.0005267	0		
57448041451	574480	4145140	0.0001299	0.0004114	0		
57449041451	574490	4145140	9.714E-05	0.0003077	0		
57449041451	574490	4145150	7.264E-05	0.0002301	0		
57450041451	574500	4145150	5.534E-05	0.0001753	0		
57446041451	574460	4145160	1.785E-05	5.662E-05	0		
57449041451	574490	4145160	2.086E-05	6.615E-05	0		
57450041451	574500	4145160	2.471E-05	7.835E-05	0		
57451041451	574510	4145160	2.965E-05	9.4E-05	0		
57446041451	574460	4145170	3.631E-05	0.0001151	0		
57447041451	574470	4145170	0.0003156	0.0009994	0		
57448041451	574480	4145170	0.0002008	0.0006359	0		
57449041451	574490	4145170	0.000123	0.0003896	0		
57450041451	574500	4145170	8.496E-05	0.0002691	0		
57451041451	574510	4145170	6.576E-05	0.0002083	0		
57452041451	574520	4145170	1.785E-05	5.663E-05	0		
57446041451	574460	4145180	2.097E-05	6.651E-05	0		
57447041451	574470	4145180	2.494E-05	7.909E-05	0		
57448041451	574480	4145180	2.998E-05	9.505E-05	0		
57449041451	574490	4145180	0.0006199	0.0019632	0		
57450041451	574500	4145180	0.0002846	0.0009014	0		
57451041451	574510	4145180	0.0001561	0.0004945	0		
57452041451	574520	4145180	0.0001126	0.0003568	0		
57453041451	574530	4145180	7.493E-05	0.0002374	0		
57445041451	574450	4145190	1.801E-05	5.715E-05	0		
57446041451	574460	4145190	2.087E-05	6.621E-05	0		
57447041451	574470	4145190	2.483E-05	7.874E-05	0		
57448041451	574480	4145190	3.023E-05	9.586E-05	0		
57449041451	574490	4145190	0.0015597	0.0049392	0		
57450041451	574500	4145190	0.0005063	0.0016034	0		
57451041451	574510	4145190	0.0002349	0.0007439	0		
57452041451	574520	4145190	0.0001346	0.0004265	0		
57444041452	574440	4145200	8.624E-05	0.0002732	0		
57445041452	574450	4145200	1.785E-05	5.667E-05	0		
57446041452	574460	4145200	2.076E-05	6.589E-05	0		
57447041452	574470	4145200	2.466E-05	7.826E-05	0		
57448041452	574480	4145200	2.98E-05	9.454E-05	0		
57449041452	574490	4145200	0.0020529	0.0065015	0		
57450041452	574500	4145200	0.0006322	0.0020021	0		

Garvey Reservoir Rehab - Mitigated Standby Generator

Cancer Risk Summary & Maximum Annual GLC for Chronic Calculations

Cancer Risk Summary

Max Risk: 1.126314

XY	X	Y	Offroad Risk	Haul Risk	Total Risk
7451041452(	574510	4145200	0.052376499	2.08786E-05	0.052397
7443041452:	574430	4145210	0.029472497	1.53963E-05	0.029488
7444041452:	574440	4145210	0.018025435	1.26333E-05	0.018038
7445041452:	574450	4145210	0.00324297	1.9645E-05	0.003263
7446041452:	574460	4145210	0.003779231	1.93322E-05	0.003799
7447041452:	574470	4145210	0.004473548	2.17015E-05	0.004495
7448041452:	574480	4145210	0.005389426	2.2457E-05	0.005412
7449041452:	574490	4145210	0.309001514	0.000463544	0.309465
7450041452:	574500	4145210	0.215670882	9.09939E-05	0.215762
7451041452:	574510	4145210	0.109253358	4.15415E-05	0.109295
7443041452:	574430	4145220	0.054895515	2.60293E-05	0.054922
7444041452:	574440	4145220	0.031448196	1.86458E-05	0.031467
7445041452:	574450	4145220	0.020380751	1.43544E-05	0.020395
7446041452:	574460	4145220	0.002978367	2.31519E-05	0.003002
7447041452:	574470	4145220	0.0036621	2.41071E-05	0.003686
7448041452:	574480	4145220	0.00430138	2.69155E-05	0.004328
7449041452:	574490	4145220	0.005146697	2.90386E-05	0.005176
7450041452:	574500	4145220	0.088079505	0.000727709	0.088807
7451041452:	574510	4145220	0.12296189	0.000327301	0.123289
7452041452:	574520	4145220	0.11490527	0.000105613	0.115011
7453041452:	574530	4145220	0.080574669	5.07024E-05	0.080625
7444041452:	574440	4145230	0.050989981	3.07328E-05	0.051021
7445041452:	574450	4145230	0.032264584	2.16056E-05	0.032286
7446041452:	574460	4145230	0.021851942	1.55417E-05	0.021867
7447041452:	574470	4145230	0.002851358	2.84043E-05	0.00288
7448041452:	574480	4145230	0.003499105	3.0611E-05	0.00353
7449041452:	574490	4145230	0.004055829	3.39295E-05	0.00409
7450041452:	574500	4145230	0.004839758	3.79932E-05	0.004878
7451041452:	574510	4145230	0.033807746	0.000135252	0.033943
7452041452:	574520	4145230	0.050360579	0.000738665	0.051099
7444041452(	574440	4145240	0.064634303	0.000299267	0.064934
7445041452(	574450	4145240	0.065126816	9.73288E-05	0.065224
7446041452(	574460	4145240	0.054356432	5.81784E-05	0.054415
7447041452(	574470	4145240	0.039897134	3.61013E-05	0.039933
7448041452(	574480	4145240	0.029010324	2.28398E-05	0.029033
7449041452(	574490	4145240	0.020724382	1.78051E-05	0.020742
7450041452(	574500	4145240	0.002916274	3.61431E-05	0.002952
7451041452(	574510	4145240	0.003062334	4.07422E-05	0.003103
7445041452:	574450	4145250	0.003532268	4.39556E-05	0.003576
7446041452:	574460	4145250	0.004504595	5.27821E-05	0.004557
7447041452:	574470	4145250	0.005308987	5.16924E-05	0.005361
7448041452:	574480	4145250	0.010186848	6.61509E-05	0.010253
7446041452(	574460	4145260	0.013264	7.68101E-05	0.013341
7447041452(	574470	4145260	0.01758937	9.49292E-05	0.017684
7448041452(	574480	4145260	0.023982875	0.000162533	0.024145
7447041452:	574470	4145270	0.031976696	0.000716559	0.032693
7449041451:	574490	4145130	0.03935805	0.000300137	0.039658
7448041451(	574480	4145140	0.040304975	9.61706E-05	0.040401
7449041451(	574490	4145140	0.037627902	5.75679E-05	0.037685
7449041451:	574490	4145150	0.03084208	3.82717E-05	0.03088
7450041451:	574500	4145150	0.023775426	2.72354E-05	0.023803
7446041451(	574460	4145160	0.018290743	1.98857E-05	0.018311
7449041451(	574490	4145160	0.002769507	6.34945E-05	0.002833
7450041451(	574500	4145160	0.003144185	7.2491E-05	0.003217
7451041451(	574510	4145160	0.003370684	7.03895E-05	0.003441
7446041451:	574460	4145170	0.004157436	8.64161E-05	0.004244
7447041451:	574470	4145170	0.004872922	8.7359E-05	0.00496
7448041451:	574480	4145170	0.005794444	8.91894E-05	0.005884
7449041451:	574490	4145170	0.006997504	9.2555E-05	0.00709
7450041451:	574500	4145170	0.008630984	0.00010279	0.008734
7451041451:	574510	4145170	0.010825422	0.000112515	0.010938
7452041451:	574520	4145170	0.013777681	0.000130516	0.013908

Max GLC for Chronic Calcs

Max GLC: 0.019104

XY	X	Y	2025	2026	2027	2034	2035
57451041452(	574510	4145200	0.0002806	0.0008887	0		
57443041452:	574430	4145210	0.0001579	0.0005001	0		
57444041452:	574440	4145210	9.656E-05	0.0003059	0		
57445041452:	574450	4145210	1.737E-05	5.519E-05	0		
57446041452:	574460	4145210	2.025E-05	6.429E-05	0		
57447041452:	574470	4145210	2.396E-05	7.608E-05	0		
57448041452:	574480	4145210	2.887E-05	9.163E-05	0		
57449041452:	574490	4145210	0.0016553	0.005246	0		
57450041452:	574500	4145210	0.0011553	0.0036594	0		
57451041452:	574510	4145210	0.0005853	0.0018537	0		
57443041452:	574430	4145220	0.0002941	0.0009315	0		
57444041452:	574440	4145220	0.0001685	0.0005336	0		
57445041452:	574450	4145220	0.0001092	0.0003459	0		
57446041452:	574460	4145220	1.596E-05	5.073E-05	0		
57447041452:	574470	4145220	1.962E-05	6.234E-05	0		
57448041452:	574480	4145220	2.304E-05	7.321E-05	0		
57449041452:	574490	4145220	2.757E-05	8.757E-05	0		
57450041452:	574500	4145220	0.0004718	0.0015008	0		
57451041452:	574510	4145220	0.0006587	0.0020889	0		
57452041452:	574520	4145220	0.0006155	0.0019502	0		
57453041452:	574530	4145220	0.0004316	0.0013673	0		
57444041452:	574440	4145230	0.0002732	0.0008653	0		
57445041452:	574450	4145230	0.0001728	0.0005475	0		
57446041452:	574460	4145230	0.0001171	0.0003708	0		
57447041452:	574470	4145230	1.527E-05	4.863E-05	0		
57448041452:	574480	4145230	1.874E-05	5.964E-05	0		
57449041452:	574490	4145230	2.173E-05	6.911E-05	0		
57450041452:	574500	4145230	2.593E-05	8.245E-05	0		
57451041452:	574510	4145230	0.0001811	0.0005747	0		
57452041452:	574520	4145230	0.0002698	0.000861	0		
57444041452(	574440	4145240	0.0003462	0.0010992	0		
57445041452(	574450	4145240	0.0003489	0.0011057	0		
57446041452(	574460	4145240	0.0002912	0.0009226	0		
57447041452(	574470	4145240	0.0002137	0.0006771	0		
57448041452(	574480	4145240	0.0001554	0.0004923	0		
57449041452(	574490	4145240	0.000111	0.0003517	0		
57450041452(	574500	4145240	1.562E-05	4.98E-05	0		
57451041452(	574510	4145240	1.64E-05	5.232E-05	0		
57445041452:	574450	4145250	1.892E-05	6.032E-05	0		
57446041452:	574460	4145250	2.413E-05	7.689E-05	0		
57447041452:	574470	4145250	2.844E-05	9.053E-05	0		
57448041452:	574480	4145250	5.457E-05	0.0001734	0		
57446041452(	574460	4145260	7.105E-05	0.0002257	0		
57447041452(	574470	4145260	9.423E-05	0.0002992	0		
57448041452(	574480	4145260	0.0001285	0.0004083	0		
57447041452:	574470	4145270	0.0001713	0.0005489	0		
57449041451:	574490	4145130	0.0002108	0.0006704	0		
57448041451(	574480	4145140	0.0002159	0.0006846	0		
57449041451(	574490	4145140	0.0002016	0.0006388	0		
57449041451:	574490	4145150	0.0001652	0.0005235	0		
57450041451:	574500	4145150	0.0001274	0.0004036	0		
57446041451(	574460	4145160	9.798E-05	0.0003105	0		
57449041451(	574490	4145160	1.484E-05	4.756E-05	0		
57450041451(	574500	4145160	1.684E-05	5.399E-05	0		
57451041451(	574510	4145160	1.806E-05	5.782E-05	0		
57446041451:	574460	4145170	2.227E-05	7.131E-05	0		
57447041451:	574470	4145170	2.61E-05	8.346E-05	0		
57448041451:	574480	4145170	3.104E-05	9.91E-05	0		
57449041451:	574490	4145170	3.749E-05	0.0001195	0		
57450041451:	574500	4145170	4.624E-05	0.0001473	0		
57451041451:	574510	4145170	5.799E-05	0.0001847	0		
57452041451:	574520	4145170	7.381E-05	0.0002349	0		

Garvey Reservoir Rehab - Mitigated Standby Generator

Cancer Risk Summary & Maximum Annual GLC for Chronic Calculations

Cancer Risk Summary

Max Risk: 1.126314

XY	X	Y	Offroad Risk	Haul Risk	Total Risk
7446041451	574460	4145180	0.017506814	0.000204847	0.017712
7447041451	574470	4145180	0.026374177	0.000272403	0.026647
7448041451	574480	4145180	0.028190409	0.000109752	0.0283
7449041451	574490	4145180	0.026959125	5.98514E-05	0.027019
7450041451	574500	4145180	0.023630777	3.92137E-05	0.02367
7451041451	574510	4145180	0.019459229	2.89234E-05	0.019488
7452041451	574520	4145180	0.015761143	2.12381E-05	0.015782
7453041451	574530	4145180	0.002633325	0.00018437	0.002818
7445041451	574450	4145190	0.002952259	0.000229093	0.003181
7446041451	574460	4145190	0.003213334	0.000167951	0.003381
7447041451	574470	4145190	0.003832151	0.000219464	0.004052
7448041451	574480	4145190	0.00441216	0.000235017	0.004647
7449041451	574490	4145190	0.005160809	0.000234935	0.005396
7450041451	574500	4145190	0.00613243	0.000243028	0.006375
7451041451	574510	4145190	0.007385588	0.00025267	0.007638
7452041451	574520	4145190	0.00896897	0.000258901	0.009228
7444041452	574440	4145200	0.010965132	0.000278917	0.011244
7445041452	574450	4145200	0.013329621	0.000335885	0.013666
7446041452	574460	4145200	0.016209203	0.001071309	0.017281
7447041452	574470	4145200	0.018707052	0.000372233	0.019079
7448041452	574480	4145200	0.020011013	0.000130922	0.020142
7449041452	574490	4145200	0.019735826	7.02172E-05	0.019806
7450041452	574500	4145200	0.018096702	4.41609E-05	0.018141
7451041452	574510	4145200	0.015714572	3.02331E-05	0.015745
7443041452	574430	4145210	0.013317626	2.20077E-05	0.01334
7444041452	574440	4145210	0.002475975	0.000742292	0.003218
7445041452	574450	4145210	0.00277233	0.000955991	0.003728
7446041452	574460	4145210	0.003101143	0.000936107	0.004037
7447041452	574470	4145210	0.00353368	0.001031193	0.004565
7448041452	574480	4145210	0.004029721	0.000972558	0.005002
7449041452	574490	4145210	0.00463231	0.001056627	0.005689
7450041452	574500	4145210	0.005420473	0.001022655	0.006443
7451041452	574510	4145210	0.006467593	0.000993405	0.007461
7443041452	574430	4145220	0.007641018	0.000955241	0.008596
7444041452	574440	4145220	0.008966148	0.000965725	0.009932
7445041452	574450	4145220	0.010555174	0.000992569	0.011548
7446041452	574460	4145220	0.012381285	0.001042774	0.013424
7447041452	574470	4145220	0.013919508	0.000512723	0.014432
7448041452	574480	4145220	0.014911592	0.000137214	0.015049
7449041452	574490	4145220	0.015008966	7.01634E-05	0.015079
7450041452	574500	4145220	0.014109317	4.35216E-05	0.014153
7451041452	574510	4145220	0.012720682	3.00842E-05	0.012751
7452041452	574520	4145220	0.011208566	2.22658E-05	0.011231
7453041452	574530	4145220	0.004906791	1.0007E-05	0.004917
7444041452	574440	4145230	0.005381664	1.0246E-05	0.005392
7445041452	574450	4145230	0.005881234	9.55009E-06	0.005891
7446041452	574460	4145230	0.006520514	9.82617E-06	0.00653
7447041452	574470	4145230	0.007101228	9.43721E-06	0.007111
7448041452	574480	4145230	0.007928905	9.65706E-06	0.007939
7449041452	574490	4145230	0.00911997	1.00925E-05	0.00913
7450041452	574500	4145230	0.010241885	1.01774E-05	0.010252
7451041452	574510	4145230	0.01182315	1.07509E-05	0.011834
7452041452	574520	4145230	0.01367184	1.1064E-05	0.013683
7444041452	574440	4145240	0.015672236	1.10335E-05	0.015683
7445041452	574450	4145240	0.017900543	1.09602E-05	0.017912
7446041452	574460	4145240	0.020260798	1.0914E-05	0.020272
7447041452	574470	4145240	0.0225766	1.09698E-05	0.022588
7448041452	574480	4145240	0.024749164	1.09832E-05	0.02476
7449041452	574490	4145240	0.026736153	1.08387E-05	0.026747
7450041452	574500	4145240	0.028219339	1.06087E-05	0.02823
7451041452	574510	4145240	0.029253053	1.00053E-05	0.029263
7445041452	574450	4145250	0.029011735	1.00093E-05	0.029022

Max GLC for Chronic Calcs

Max GLC: 0.019104

XY	X	Y	2025	2026	2027	2034	2035
574460414518	574460	4145180	9.378E-05	0.0002988	0		
574470414518	574470	4145180	0.0001413	0.0004499	0		
574480414518	574480	4145180	0.000151	0.0004792	0		
574490414518	574490	4145180	0.0001444	0.0004579	0		
574500414518	574500	4145180	0.0001266	0.0004012	0		
574510414518	574510	4145180	0.0001042	0.0003304	0		
574520414518	574520	4145180	8.443E-05	0.0002676	0		
574530414518	574530	4145180	1.411E-05	4.634E-05	0		
574450414519	574450	4145190	1.582E-05	5.216E-05	0		
574460414519	574460	4145190	1.721E-05	5.603E-05	0		
574470414519	574470	4145190	2.053E-05	6.7E-05	0		
574480414519	574480	4145190	2.364E-05	7.698E-05	0		
574490414519	574490	4145190	2.765E-05	8.968E-05	0		
574500414519	574500	4145190	3.285E-05	0.0001062	0		
574510414519	574510	4145190	3.956E-05	0.0001276	0		
574520414519	574520	4145190	4.805E-05	0.0001545	0		
574440414520	574440	4145200	5.874E-05	0.0001885	0		
574450414520	574450	4145200	7.141E-05	0.0002292	0		
574460414520	574460	4145200	8.683E-05	0.0002847	0		
574470414520	574470	4145200	0.0001002	0.0003207	0		
574480414520	574480	4145200	0.0001072	0.0003406	0		
574490414520	574490	4145200	0.0001057	0.0003354	0		
574500414520	574500	4145200	9.694E-05	0.0003074	0		
574510414520	574510	4145200	8.418E-05	0.0002669	0		
574430414521	574430	4145210	7.134E-05	0.0002261	0		
574440414521	574440	4145210	1.326E-05	4.873E-05	0		
574450414521	574450	4145210	1.485E-05	5.57E-05	0		
574460414521	574460	4145210	1.661E-05	6.11E-05	0		
574470414521	574470	4145210	1.893E-05	6.93E-05	0		
574480414521	574480	4145210	2.159E-05	7.718E-05	0		
574490414521	574490	4145210	2.482E-05	8.817E-05	0		
574500414521	574500	4145210	2.904E-05	0.0001012	0		
574510414521	574510	4145210	3.465E-05	0.0001187	0		
574430414522	574430	4145220	4.093E-05	0.0001383	0		
574440414522	574440	4145220	4.803E-05	0.0001609	0		
574450414522	574450	4145220	5.654E-05	0.0001881	0		
574460414522	574460	4145220	6.633E-05	0.0002195	0		
574470414522	574470	4145220	7.457E-05	0.0002408	0		
574480414522	574480	4145220	7.988E-05	0.0002542	0		
574490414522	574490	4145220	8.04E-05	0.0002552	0		
574500414522	574500	4145220	7.558E-05	0.0002397	0		
574510414522	574510	4145220	6.814E-05	0.0002161	0		
574520414522	574520	4145220	6.004E-05	0.0001903	0		
574530414522	574530	4145220	2.629E-05	8.333E-05	0		
574440414523	574440	4145230	2.883E-05	9.139E-05	0		
574450414523	574450	4145230	3.151E-05	9.985E-05	0		
574460414523	574460	4145230	3.493E-05	0.0001107	0		
574470414523	574470	4145230	3.804E-05	0.0001205	0		
574480414523	574480	4145230	4.247E-05	0.0001346	0		
574490414523	574490	4145230	4.886E-05	0.0001548	0		
574500414523	574500	4145230	5.487E-05	0.0001738	0		
574510414523	574510	4145230	6.334E-05	0.0002007	0		
574520414523	574520	4145230	7.324E-05	0.000232	0		
574440414524	574440	4145240	8.396E-05	0.000266	0		
574450414524	574450	4145240	9.589E-05	0.0003038	0		
574460414524	574460	4145240	0.0001085	0.0003438	0		
574470414524	574470	4145240	0.0001209	0.0003831	0		
574480414524	574480	4145240	0.0001326	0.0004199	0		
574490414524	574490	4145240	0.0001432	0.0004536	0		
574500414524	574500	4145240	0.0001512	0.0004788	0		
574510414524	574510	4145240	0.0001567	0.0004963	0		
574450414525	574450	4145250	0.0001554	0.0004922	0		

Garvey Reservoir Rehab - Mitigated Standby Generator

Cancer Risk Summary & Maximum Annual GLC for Chronic Calculations

Cancer Risk Summary

Max Risk: 1.126314

XY	X	Y	Offroad Risk	Haul Risk	Total Risk
7446041452	574460	4145250	0.027966732	9.97614E-06	0.027977
7447041452	574470	4145250	0.026506831	9.70817E-06	0.026517
7448041452	574480	4145250	0.024895225	8.57718E-06	0.024904
7446041452	574460	4145260	0.022575894	8.29159E-06	0.022584
7447041452	574470	4145260	0.005005576	1.06897E-05	0.005016
7448041452	574480	4145260	0.005479744	1.02986E-05	0.00549
7447041452	574470	4145270	0.00600401	9.7537E-06	0.006014
7449041451	574490	4145130	0.006607304	9.87175E-06	0.006617
7448041451	574480	4145140	0.007372181	1.01317E-05	0.007382
7449041451	574490	4145140	0.008341685	1.04359E-05	0.008352
7449041451	574490	4145150	0.009641413	1.12569E-05	0.009653
7450041451	574500	4145150	0.011039926	1.15306E-05	0.011051
7446041451	574460	4145160	0.012849103	1.20472E-05	0.012861
7449041451	574490	4145160	0.01499697	1.22193E-05	0.015009
7450041451	574500	4145160	0.017532922	1.22138E-05	0.017545
7451041451	574510	4145160	0.020564915	1.20635E-05	0.020577
7446041451	574460	4145170	0.02398852	1.1996E-05	0.024001
7447041451	574470	4145170	0.027655559	1.21084E-05	0.027668
7448041451	574480	4145170	0.031328243	1.21959E-05	0.03134
7449041451	574490	4145170	0.034801241	1.21411E-05	0.034813
7450041451	574500	4145170	0.037589094	1.19891E-05	0.037601
7451041451	574510	4145170	0.039741195	1.13255E-05	0.039753
7452041451	574520	4145170	0.039890783	1.10503E-05	0.039902
7446041451	574460	4145180	0.038222729	1.10856E-05	0.038234
7447041451	574470	4145180	0.035512492	1.08586E-05	0.035523
7448041451	574480	4145180	0.032554588	9.46237E-06	0.032564
7449041451	574490	4145180	0.028712558	9.17748E-06	0.028722
7450041451	574500	4145180	0.005088837	1.14128E-05	0.0051
7451041451	574510	4145180	0.005598286	1.13402E-05	0.00561
7452041451	574520	4145180	0.006102089	1.02844E-05	0.006112
7453041451	574530	4145180	0.006787233	1.05797E-05	0.006798
7445041451	574450	4145190	0.007621261	1.08984E-05	0.007632
7446041451	574460	4145190	0.008830671	1.21561E-05	0.008843
7447041451	574470	4145190	0.010152978	1.27344E-05	0.010166
7448041451	574480	4145190	0.01175894	1.30682E-05	0.011772
7449041451	574490	4145190	0.013775565	1.33939E-05	0.013789
7450041451	574500	4145190	0.016298815	1.35512E-05	0.016312
7451041451	574510	4145190	0.019436649	1.3592E-05	0.01945
7452041451	574520	4145190	0.02337323	1.3452E-05	0.023387
7444041452	574440	4145200	0.028150189	1.33447E-05	0.028164
7445041452	574450	4145200	0.033768938	1.36326E-05	0.033783
7446041452	574460	4145200	0.039809639	1.38832E-05	0.039824
7447041452	574470	4145200	0.046610279	1.36997E-05	0.046624
7448041452	574480	4145200	0.0529304	1.31711E-05	0.052944
7449041452	574490	4145200	0.056937542	1.24769E-05	0.05695
7450041452	574500	4145200	0.05716263	1.1895E-05	0.057175
7451041452	574510	4145200	0.055401436	1.23741E-05	0.055414
7443041452	574430	4145210	0.043840771	1.1664E-05	0.043852
7444041452	574440	4145210	0.036775529	9.96874E-06	0.036785
7445041452	574450	4145210	0.005150225	1.20682E-05	0.005162
7446041452	574460	4145210	0.005604636	1.07293E-05	0.005615
7447041452	574470	4145210	0.006210047	1.10112E-05	0.006221
7448041452	574480	4145210	0.006984098	1.15099E-05	0.006996
7449041452	574490	4145210	0.062305094	1.26547E-05	0.062318
7450041452	574500	4145210	0.047426666	1.09968E-05	0.047438
7451041452	574510	4145210	0.005192562	1.28116E-05	0.005205
7443041452	574430	4145220	0.005662496	1.15157E-05	0.005674
7444041452	574440	4145220	0.006307421	1.19282E-05	0.006319
7445041452	574450	4145220	0.084567699	1.3446E-05	0.084581
7446041452	574460	4145220	0.059631549	1.22915E-05	0.059644
7447041452	574470	4145220	0.005174216	1.2569E-05	0.005187
7448041452	574480	4145220	0.005706949	1.25146E-05	0.005719

Max GLC for Chronic Calcs

Max GLC: 0.019104

XY	X	Y	2025	2026	2027	2034	2035
57446041452	574460	4145250	0.0001498	0.0004745	0		
57447041452	574470	4145250	0.000142	0.0004497	0		
57448041452	574480	4145250	0.0001334	0.0004224	0		
57446041452	574460	4145260	0.0001209	0.000383	0		
57447041452	574470	4145260	2.681E-05	8.501E-05	0		
57448041452	574480	4145260	2.935E-05	9.305E-05	0		
57447041452	574470	4145270	3.216E-05	0.0001019	0		
57449041451	574490	4145130	3.54E-05	0.0001122	0		
57448041451	574480	4145140	3.949E-05	0.0001252	0		
57449041451	574490	4145140	4.469E-05	0.0001416	0		
57449041451	574490	4145150	5.165E-05	0.0001637	0		
57450041451	574500	4145150	5.914E-05	0.0001874	0		
57446041451	574460	4145160	6.883E-05	0.0002181	0		
57449041451	574490	4145160	8.034E-05	0.0002545	0		
57450041451	574500	4145160	9.392E-05	0.0002975	0		
57451041451	574510	4145160	0.0001102	0.000349	0		
57446041451	574460	4145170	0.0001285	0.000407	0		
57447041451	574470	4145170	0.0001482	0.0004693	0		
57448041451	574480	4145170	0.0001678	0.0005316	0		
57449041451	574490	4145170	0.0001864	0.0005905	0		
57450041451	574500	4145170	0.0002014	0.0006378	0		
57451041451	574510	4145170	0.0002129	0.0006743	0		
57452041451	574520	4145170	0.0002137	0.0006768	0		
57446041451	574460	4145180	0.0002048	0.0006485	0		
57447041451	574470	4145180	0.0001902	0.0006025	0		
57448041451	574480	4145180	0.0001744	0.0005523	0		
57449041451	574490	4145180	0.0001538	0.0004872	0		
57450041451	574500	4145180	2.726E-05	8.643E-05	0		
57451041451	574510	4145180	2.999E-05	9.507E-05	0		
57452041451	574520	4145180	3.269E-05	0.0001036	0		
57453041451	574530	4145180	3.636E-05	0.0001152	0		
57445041451	574450	4145190	4.083E-05	0.0001294	0		
57446041451	574460	4145190	4.731E-05	0.0001499	0		
57447041451	574470	4145190	5.439E-05	0.0001723	0		
57448041451	574480	4145190	6.299E-05	0.0001996	0		
57449041451	574490	4145190	7.38E-05	0.0002338	0		
57450041451	574500	4145190	8.731E-05	0.0002766	0		
57451041451	574510	4145190	0.0001041	0.0003298	0		
57452041451	574520	4145190	0.0001252	0.0003966	0		
57444041452	574440	4145200	0.0001508	0.0004777	0		
57445041452	574450	4145200	0.0001809	0.000573	0		
57446041452	574460	4145200	0.0002133	0.0006754	0		
57447041452	574470	4145200	0.0002497	0.0007908	0		
57448041452	574480	4145200	0.0002835	0.000898	0		
57449041452	574490	4145200	0.000305	0.000966	0		
57450041452	574500	4145200	0.0003062	0.0009698	0		
57451041452	574510	4145200	0.0002968	0.0009399	0		
57443041452	574430	4145210	0.0002349	0.0007438	0		
57444041452	574440	4145210	0.000197	0.0006239	0		
57445041452	574450	4145210	2.759E-05	8.748E-05	0		
57446041452	574460	4145210	3.002E-05	9.517E-05	0		
57447041452	574470	4145210	3.327E-05	0.0001054	0		
57448041452	574480	4145210	3.741E-05	0.0001186	0		
57449041452	574490	4145210	0.0003338	0.001057	0		
57450041452	574500	4145210	0.0002541	0.0008046	0		
57451041452	574510	4145210	2.782E-05	8.82E-05	0		
57443041452	574430	4145220	3.033E-05	9.616E-05	0		
57444041452	574440	4145220	3.379E-05	0.0001071	0		
57445041452	574450	4145220	0.000453	0.0014347	0		
57446041452	574460	4145220	0.0003194	0.0010117	0		
57447041452	574470	4145220	2.772E-05	8.789E-05	0		
57448041452	574480	4145220	3.057E-05	9.692E-05	0		

Garvey Reservoir Rehab - Mitigated Standby Generator

Cancer Risk Summary & Maximum Annual GLC for Chronic Calculations

Cancer Risk Summary

Max Risk: 1.126314

XY	X	Y	Offroad Risk	Haul Risk	Total Risk
7449041452	574490	4145220	0.115052742	1.54525E-05	0.115068
7450041452	574500	4145220	0.076317742	1.40051E-05	0.076332
7451041452	574510	4145220	0.005180566	1.355E-05	0.005194
7452041452	574520	4145220	0.005736585	1.40009E-05	0.005751
7453041452	574530	4145220	0.19030149	2.063E-05	0.190322
7444041452	574440	4145230	0.117762272	1.93047E-05	0.117782
7445041452	574450	4145230	0.005178449	1.49425E-05	0.005193
7446041452	574460	4145230	0.005744346	1.57052E-05	0.00576
7447041452	574470	4145230	0.2778405	2.77678E-05	0.277868
7448041452	574480	4145230	0.151046458	2.55732E-05	0.151072
7449041452	574490	4145230	0.005192562	1.86065E-05	0.005211
7450041452	574500	4145230	0.005707655	1.71389E-05	0.005725
7451041452	574510	4145230	0.907827556	5.89091E-05	0.907886
7452041452	574520	4145230	0.351613823	4.26777E-05	0.351657
7444041452	574440	4145240	0.17614772	3.22013E-05	0.17618
7445041452	574450	4145240	0.005135407	2.00457E-05	0.005155
7446041452	574460	4145240	0.005646972	1.87619E-05	0.005666
7447041452	574470	4145240	1.12596524	0.000349181	1.126314
7448041452	574480	4145240	0.596688758	0.000100861	0.59679
7449041452	574490	4145240	0.328563055	5.77913E-05	0.328621
7450041452	574500	4145240	0.182834757	3.97907E-05	0.182875
7451041452	574510	4145240	0.005059202	2.16958E-05	0.005081
7445041452	574450	4145250	0.0055623	2.07458E-05	0.005583
7446041452	574460	4145250	0.501164395	0.000508677	0.501673
7447041452	574470	4145250	0.346536981	0.000129354	0.346666
7448041452	574480	4145250	0.232016267	6.97439E-05	0.232086
7446041452	574460	4145260	0.153974021	4.73104E-05	0.154021
7447041452	574470	4145260	0.004960417	2.32238E-05	0.004984
7448041452	574480	4145260	0.005457164	2.31137E-05	0.00548
7447041452	574470	4145270	0.241520087	0.001347595	0.242868
7457041450	574570	4145030	0.272168125	0.000356729	0.272525
7463041450	574630	4145080	0.249565418	0.000157223	0.249723
7461041450	574610	4145090	0.195054458	8.66747E-05	0.195141
7462041450	574620	4145090	0.140229503	5.62389E-05	0.140286
7463041450	574630	4145090	0.004862338	2.63151E-05	0.004889
7464041450	574640	4145090	0.005335094	2.61188E-05	0.005361
7460041451	574600	4145100	0.005916514	2.78427E-05	0.005944
7461041451	574610	4145100	0.119626486	0.001094831	0.120721
7462041451	574620	4145100	0.15098507	0.000807111	0.151792
7463041451	574630	4145100	0.168744492	0.000297294	0.169042
7464041451	574640	4145100	0.164536252	0.000156319	0.164693
7465041451	574650	4145100	0.142510025	9.40037E-05	0.142604
7459041451	574590	4145110	0.114429691	6.24535E-05	0.114492
7460041451	574600	4145110	0.004740973	2.92428E-05	0.00477
7461041451	574610	4145110	0.005193973	2.9766E-05	0.005224
7462041451	574620	4145110	0.005738701	3.11988E-05	0.00577
7463041451	574630	4145110	0.067065824	0.000263195	0.067329
7464041451	574640	4145110	0.085118072	0.001042466	0.086161
7465041451	574650	4145110	0.102825279	0.000807381	0.103633
7466041451	574660	4145110	0.114036668	0.00028619	0.114323
7460041451	574600	4145120	0.11432385	0.000156583	0.11448
7461041451	574610	4145120	0.104809446	9.90147E-05	0.104908
7462041451	574620	4145120	0.089720041	6.80104E-05	0.089788
7463041451	574630	4145120	0.004620314	3.31892E-05	0.004654
7464041451	574640	4145120	0.005041562	3.41787E-05	0.005076
7465041451	574650	4145120	0.005546071	3.54108E-05	0.005581
7466041451	574660	4145120	0.041148881	0.000141792	0.041291
7460041451	574600	4145130	0.05199406	0.000276107	0.05227
7462041451	574620	4145130	0.063384673	0.001047623	0.064432
7463041451	574630	4145130	0.074137417	0.000788283	0.074926
7464041451	574640	4145130	0.081954131	0.000264545	0.082219
7465041451	574650	4145130	0.083984162	0.000144762	0.084129

Max GLC for Chronic Calcs

Max GLC: 0.019104

XY	X	Y	2025	2026	2027	2034	2035
57449041452	574490	4145220	0.0006163	0.0019519	0		
57450041452	574500	4145220	0.0004088	0.0012948	0		
57451041452	574510	4145220	2.775E-05	8.8E-05	0		
57452041452	574520	4145220	3.073E-05	9.744E-05	0		
57453041452	574530	4145220	0.0010194	0.0032284	0		
57444041452	574440	4145230	0.0006308	0.0019979	0		
57445041452	574450	4145230	2.774E-05	8.798E-05	0		
57446041452	574460	4145230	3.077E-05	9.759E-05	0		
57447041452	574470	4145230	0.0014884	0.0047135	0		
57448041452	574480	4145230	0.0008092	0.0025625	0		
57449041452	574490	4145230	2.782E-05	8.825E-05	0		
57450041452	574500	4145230	3.058E-05	9.698E-05	0		
57451041452	574510	4145230	0.0048632	0.0154007	0		
57452041452	574520	4145230	0.0018836	0.0059651	0		
57444041452	574440	4145240	0.0009436	0.0029884	0		
57445041452	574450	4145240	2.751E-05	8.73E-05	0		
57446041452	574460	4145240	3.025E-05	9.596E-05	0		
57447041452	574470	4145240	0.0060318	0.0191038	0		
57448041452	574480	4145240	0.0031964	0.010123	0		
57449041452	574490	4145240	0.0017601	0.0055742	0		
57450041452	574500	4145240	0.0009794	0.0031019	0		
57451041452	574510	4145240	2.71E-05	8.602E-05	0		
57445041452	574450	4145250	2.98E-05	9.455E-05	0		
57446041452	574460	4145250	0.0026847	0.0085062	0		
57447041452	574470	4145250	0.0018564	0.0058797	0		
57448041452	574480	4145250	0.0012429	0.0039365	0		
57446041452	574460	4145260	0.0008248	0.0026124	0		
57447041452	574470	4145260	2.657E-05	8.436E-05	0		
57448041452	574480	4145260	2.923E-05	9.278E-05	0		
57447041452	574470	4145270	0.0012938	0.0041093	0		
57457041450	574570	4145030	0.001458	0.0046202	0		
57463041450	574630	4145080	0.0013369	0.004235	0		
57461041450	574610	4145090	0.0010449	0.0033096	0		
57462041450	574620	4145090	0.0007512	0.0023793	0		
57463041450	574630	4145090	2.605E-05	8.272E-05	0		
57464041450	574640	4145090	2.858E-05	9.074E-05	0		
57460041451	574600	4145100	3.169E-05	0.0001006	0		
57461041451	574610	4145100	0.0006408	0.0020392	0		
57462041451	574620	4145100	0.0008088	0.0025686	0		
57463041451	574630	4145100	0.000904	0.0028652	0		
57464041451	574640	4145100	0.0008814	0.0027926	0		
57465041451	574650	4145100	0.0007634	0.0024184	0		
57459041451	574590	4145110	0.000613	0.0019417	0		
57460041451	574600	4145110	2.54E-05	8.069E-05	0		
57461041451	574610	4145110	2.782E-05	8.838E-05	0		
57462041451	574620	4145110	3.074E-05	9.763E-05	0		
57463041451	574630	4145110	0.0003593	0.0011401	0		
57464041451	574640	4145110	0.000456	0.0014534	0		
57465041451	574650	4145110	0.0005508	0.0017516	0		
57466041451	574660	4145110	0.0006109	0.0019371	0		
57460041451	574600	4145120	0.0006124	0.0019408	0		
57461041451	574610	4145120	0.0005615	0.0017789	0		
57462041451	574620	4145120	0.0004806	0.0015226	0		
57463041451	574630	4145120	2.475E-05	7.868E-05	0		
57464041451	574640	4145120	2.701E-05	8.583E-05	0		
57465041451	574650	4145120	2.971E-05	9.44E-05	0		
57466041451	574660	4145120	0.0002204	0.0006993	0		
57460041451	574600	4145130	0.0002785	0.0008845	0		
57462041451	574620	4145130	0.0003395	0.0010847	0		
57463041451	574630	4145130	0.0003972	0.0012648	0		
57464041451	574640	4145130	0.000439	0.0013926	0		
57465041451	574650	4145130	0.0004499	0.001426	0		

Garvey Reservoir Rehab - Mitigated Standby Generator

Cancer Risk Summary & Maximum Annual GLC for Chronic Calculations

Cancer Risk Summary

Max Risk: 1.126314

XY	X	Y	Offroad Risk	Haul Risk	Total Risk
7463041451	574630	4145140	0.079469689	0.000102509	0.079572
7464041451	574640	4145140	0.071092723	7.19901E-05	0.071165
7459041451	574590	4145150	0.004478487	3.78572E-05	0.004516
7460041451	574600	4145150	0.004874333	3.94738E-05	0.004914
7460041451	574600	4145160	0.005344973	4.10089E-05	0.005386
7461041451	574610	4145160	0.022864488	8.07616E-05	0.022945
7461041451	574610	4145170	0.027496092	0.000102601	0.027599
7457041450	574570	4145030	0.03352762	0.000148389	0.033676
7463041450	574630	4145080	0.04099647	0.000274503	0.041271
7461041450	574610	4145090	0.048896445	0.00102853	0.049925
7462041450	574620	4145090	0.055951103	0.000680324	0.056631
7463041450	574630	4145090	0.061313011	0.000260587	0.061574
7464041450	574640	4145090	0.063374794	0.000143831	0.063519
7460041451	574600	4145100	0.06041689	8.96448E-05	0.060507
7461041451	574610	4145100	0.057099831	6.49427E-05	0.057165
7462041451	574620	4145100	0.004331721	4.40256E-05	0.004376
7463041451	574630	4145100	0.004703576	4.64257E-05	0.00475
7464041451	574640	4145100	0.005135407	4.79732E-05	0.005183
7465041451	574650	4145100	0.005616631	4.61691E-05	0.005663
7459041451	574590	4145110	0.016988899	7.63954E-05	0.017065
7460041451	574600	4145110	0.019948214	8.93917E-05	0.020038
7461041451	574610	4145110	0.023504473	0.000112321	0.023617
7462041451	574620	4145110	0.027962498	0.000160373	0.028123
7463041451	574630	4145110	0.033073209	0.000281276	0.033354
7464041451	574640	4145110	0.038798504	0.000936891	0.039735
7465041451	574650	4145110	0.043638262	0.000656094	0.044294
7466041451	574660	4145110	0.047351166	0.000262465	0.047614
7460041451	574600	4145120	0.049188566	0.000140572	0.049329
7461041451	574610	4145120	0.047651754	9.06771E-05	0.047742
7462041451	574620	4145120	0.045108747	6.45716E-05	0.045173
7463041451	574630	4145120	0.004173665	5.1378E-05	0.004225
7464041451	574640	4145120	0.004527174	5.57524E-05	0.004583
7465041451	574650	4145120	0.004927959	5.55532E-05	0.004984
7466041451	574660	4145120	0.005325921	5.35978E-05	0.00538
7460041451	574600	4145130	0.005820552	5.29868E-05	0.005874
7462041451	574620	4145130	0.009043059	6.52834E-05	0.009108
7463041451	574630	4145130	0.010220011	6.91993E-05	0.010289
7464041451	574640	4145130	0.011557842	7.51634E-05	0.011633
7465041451	574650	4145130	0.013271761	8.06862E-05	0.013352
7463041451	574630	4145140	0.015268629	8.87616E-05	0.015357
7464041451	574640	4145140	0.017527982	0.000100831	0.017629
7459041451	574590	4145150	0.020406153	0.000126666	0.020533
7460041451	574600	4145150	0.023695693	0.000179544	0.023875
7460041451	574600	4145160	0.027306989	0.00031402	0.027621
7461041451	574610	4145160	0.031152547	0.001000713	0.032153
7461041451	574610	4145170	0.035034796	0.000651574	0.035686
7457041450	574570	4145030	0.037812065	0.000262404	0.038074
7463041450	574630	4145080	0.038544485	0.000136467	0.038681
7461041450	574610	4145090	0.038213556	9.00224E-05	0.038304
7462041450	574620	4145090	0.036860907	6.5115E-05	0.036926
7463041450	574630	4145090	0.003977506	6.1928E-05	0.004039
7464041450	574640	4145090	0.00434795	7.01247E-05	0.004418
7460041451	574600	4145100	0.004666179	6.58969E-05	0.004732
7461041451	574610	4145100	0.005081076	6.62958E-05	0.005147
7462041451	574620	4145100	0.005584173	6.74793E-05	0.005652
7463041451	574630	4145100	0.006155009	6.88874E-05	0.006224
7464041451	574640	4145100	0.006792173	7.10133E-05	0.006863
7465041451	574650	4145100	0.007530943	7.48651E-05	0.007606
7459041451	574590	4145110	0.008399545	7.85642E-05	0.008478
7460041451	574600	4145110	0.009404329	8.42411E-05	0.009489
7461041451	574610	4145110	0.010574931	9.06314E-05	0.010666
7462041451	574620	4145110	0.01199179	9.62641E-05	0.012088

Max GLC for Chronic Calcs

Max GLC: 0.019104

XY	X	Y	2025	2026	2027	2034	2035
57463041451	574630	4145140	0.0004257	0.001349	0		
57464041451	574640	4145140	0.0003808	0.0012067	0		
57459041451	574590	4145150	2.399E-05	7.632E-05	0		
57460041451	574600	4145150	2.611E-05	8.304E-05	0		
57460041451	574600	4145160	2.863E-05	9.104E-05	0		
57461041451	574610	4145160	0.0001225	0.0003886	0		
57461041451	574610	4145170	0.0001473	0.0004674	0		
57457041450	574570	4145030	0.0001796	0.0005701	0		
57463041450	574630	4145080	0.0002196	0.0006979	0		
57461041450	574610	4145090	0.0002619	0.0008388	0		
57462041450	574620	4145090	0.0002997	0.0009553	0		
57463041450	574630	4145090	0.0003285	0.0010425	0		
57464041450	574640	4145090	0.0003395	0.0010764	0		
57460041451	574600	4145100	0.0003237	0.0010257	0		
57461041451	574610	4145100	0.0003059	0.0009692	0		
57462041451	574620	4145100	2.32E-05	7.388E-05	0		
57463041451	574630	4145100	2.52E-05	8.021E-05	0		
57464041451	574640	4145100	2.751E-05	8.755E-05	0		
57465041451	574650	4145100	3.009E-05	9.57E-05	0		
57459041451	574590	4145110	9.101E-05	0.0002889	0		
57460041451	574600	4145110	0.0001069	0.0003392	0		
57461041451	574610	4145110	0.0001259	0.0003997	0		
57462041451	574620	4145110	0.0001498	0.0004758	0		
57463041451	574630	4145110	0.0001772	0.0005636	0		
57464041451	574640	4145110	0.0002078	0.0006667	0		
57465041451	574650	4145110	0.0002338	0.0007462	0		
57466041451	574660	4145110	0.0002537	0.0008056	0		
57460041451	574600	4145120	0.0002635	0.0008357	0		
57461041451	574610	4145120	0.0002553	0.0008092	0		
57462041451	574620	4145120	0.0002416	0.0007658	0		
57463041451	574630	4145120	2.236E-05	7.127E-05	0		
57464041451	574640	4145120	2.425E-05	7.73E-05	0		
57465041451	574650	4145120	2.64E-05	8.41E-05	0		
57466041451	574660	4145120	2.853E-05	9.083E-05	0		
57460041451	574600	4145130	3.118E-05	9.922E-05	0		
57462041451	574620	4145130	4.844E-05	0.000154	0		
57463041451	574630	4145130	5.475E-05	0.000174	0		
57464041451	574640	4145130	6.192E-05	0.0001967	0		
57465041451	574650	4145130	7.11E-05	0.0002259	0		
57463041451	574630	4145140	8.179E-05	0.0002598	0		
57464041451	574640	4145140	9.39E-05	0.0002983	0		
57459041451	574590	4145150	0.0001093	0.0003473	0		
57460041451	574600	4145150	0.0001269	0.0004036	0		
57460041451	574600	4145160	0.0001463	0.0004661	0		
57461041451	574610	4145160	0.0001669	0.0005375	0		
57461041451	574610	4145170	0.0001877	0.0006002	0		
57457041450	574570	4145030	0.0002026	0.0006438	0		
57463041450	574630	4145080	0.0002065	0.0006551	0		
57461041450	574610	4145090	0.0002047	0.0006491	0		
57462041450	574620	4145090	0.0001975	0.0006259	0		
57463041450	574630	4145090	2.131E-05	6.804E-05	0		
57464041450	574640	4145090	2.329E-05	7.439E-05	0		
57460041451	574600	4145100	2.5E-05	7.975E-05	0		
57461041451	574610	4145100	2.722E-05	8.68E-05	0		
57462041451	574620	4145100	2.991E-05	9.534E-05	0		
57463041451	574630	4145100	3.297E-05	0.000105	0		
57464041451	574640	4145100	3.639E-05	0.0001159	0		
57465041451	574650	4145100	4.034E-05	0.0001284	0		
57459041451	574590	4145110	4.5E-05	0.0001432	0		
57460041451	574600	4145110	5.038E-05	0.0001603	0		
57461041451	574610	4145110	5.665E-05	0.0001802	0		
57462041451	574620	4145110	6.424E-05	0.0002043	0		

Garvey Reservoir Rehab - Mitigated Standby Generator

Cancer Risk Summary & Maximum Annual GLC for Chronic Calculations

Cancer Risk Summary

Max Risk: 1.126314

XY	X	Y	Offroad Risk	Haul Risk	Total Risk
7463041451	574630	4145110	0.013614686	0.00010386	0.013719
7464041451	574640	4145110	0.015410456	0.00011526	0.015526
7465041451	574650	4145110	0.017341702	0.000138593	0.01748
7466041451	574660	4145110	0.020111915	0.000202757	0.020315
7460041451	574600	4145120	0.022897651	0.000399588	0.023297
7461041451	574610	4145120	0.025847794	0.001391917	0.02724
7462041451	574620	4145120	0.028668105	0.000586925	0.029255
7463041451	574630	4145120	0.030794804	0.000258592	0.031053
7464041451	574640	4145120	0.032112172	0.000150733	0.032263
7465041451	574650	4145120	0.031308486	8.94776E-05	0.031398
7466041451	574660	4145120	0.030670617	6.57499E-05	0.030736
7460041451	574600	4145130	0.003667039	7.98236E-05	0.003747
7462041451	574620	4145130	0.004170843	9.46896E-05	0.004266
7463041451	574630	4145130	0.004503889	9.82805E-05	0.004602
7464041451	574640	4145130	0.004886328	9.65948E-05	0.004983
7465041451	574650	4145130	0.00531322	9.77304E-05	0.005411
7463041451	574630	4145140	0.005807145	9.70778E-05	0.005904
7464041451	574640	4145140	0.006363869	9.86958E-05	0.006463
7459041451	574590	4145150	0.007010205	0.000100114	0.00711
7460041451	574600	4145150	0.007758854	0.000105532	0.007864
7460041451	574600	4145160	0.008639452	0.000111154	0.008751
7461041451	574610	4145160	0.009639297	0.000115954	0.009755
7461041451	574610	4145170	0.010797198	0.000120903	0.010918
7457041450	574570	4145030	0.012137851	0.000127807	0.012266
7463041450	574630	4145080	0.013691597	0.000140193	0.013832
7461041450	574610	4145090	0.015170549	0.000163715	0.015334
7462041450	574620	4145090	0.017285959	0.000228295	0.017514
7463041450	574630	4145090	0.019522733	0.000517718	0.02004
7464041450	574640	4145090	0.021722816	0.001422033	0.023145
7460041451	574600	4145100	0.023833992	0.000475935	0.02431
7461041451	574610	4145100	0.025554261	0.000240943	0.025795
7462041451	574620	4145100	0.02666277	0.000150506	0.026813
7463041451	574630	4145100	0.027064966	0.000102712	0.027168
7464041451	574640	4145100	0.026734742	7.45469E-05	0.026809
7465041451	574650	4145100	0	0	0
7459041451	574590	4145110	0	0	0
7460041451	574600	4145110	0	0	0
7461041451	574610	4145110	0	0	0
7462041451	574620	4145110	0	0	0
7463041451	574630	4145110	0	0	0
7464041451	574640	4145110	0	0	0
7465041451	574650	4145110	0	0	0
7466041451	574660	4145110	0	0	0
7460041451	574600	4145120	0	0	0
7461041451	574610	4145120	0	0	0
7462041451	574620	4145120	0	0	0
7463041451	574630	4145120	0	0	0
7464041451	574640	4145120	0	0	0
7465041451	574650	4145120	0	0	0
7466041451	574660	4145120	0	0	0
7460041451	574600	4145130	0	0	0
7462041451	574620	4145130	0	0	0
7463041451	574630	4145130	0	0	0
7464041451	574640	4145130	0	0	0
7465041451	574650	4145130	0	0	0
7463041451	574630	4145140	0	0	0
7464041451	574640	4145140	0	0	0
7459041451	574590	4145150	0	0	0
7460041451	574600	4145150	0	0	0
7460041451	574600	4145160	0	0	0
7461041451	574610	4145160	0	0	0
7461041451	574610	4145170	0	0	0

Max GLC for Chronic Calcs

Max GLC: 0.019104

XY	X	Y	2025	2026	2027	2034	2035
57463041451	574630	4145110	7.293E-05	0.0002319	0		
57464041451	574640	4145110	8.255E-05	0.0002625	0		
57465041451	574650	4145110	9.29E-05	0.0002954	0		
57466041451	574660	4145110	0.0001077	0.000343	0		
57460041451	574600	4145120	0.0001227	0.0003921	0		
57461041451	574610	4145120	0.0001385	0.0004511	0		
57462041451	574620	4145120	0.0001536	0.0004916	0		
57463041451	574630	4145120	0.000165	0.0005247	0		
57464041451	574640	4145120	0.000172	0.0005461	0		
57465041451	574650	4145120	0.0001677	0.0005319	0		
57466041451	574660	4145120	0.0001643	0.0005209	0		
57460041451	574600	4145130	1.964E-05	6.293E-05	0		
57462041451	574620	4145130	2.234E-05	7.161E-05	0		
57463041451	574630	4145130	2.413E-05	7.729E-05	0		
57464041451	574640	4145130	2.618E-05	8.377E-05	0		
57465041451	574650	4145130	2.846E-05	9.102E-05	0		
57463041451	574630	4145140	3.111E-05	9.939E-05	0		
57464041451	574640	4145140	3.409E-05	0.0001089	0		
57459041451	574590	4145150	3.755E-05	0.0001198	0		
57460041451	574600	4145150	4.156E-05	0.0001326	0		
57460041451	574600	4145160	4.628E-05	0.0001476	0		
57461041451	574610	4145160	5.164E-05	0.0001646	0		
57461041451	574610	4145170	5.784E-05	0.0001843	0		
57457041450	574570	4145030	6.502E-05	0.0002071	0		
57463041450	574630	4145080	7.335E-05	0.0002335	0		
57461041450	574610	4145090	8.127E-05	0.0002588	0		
57462041450	574620	4145090	9.26E-05	0.0002953	0		
57463041450	574630	4145090	0.0001046	0.0003359	0		
57464041450	574640	4145090	0.0001164	0.0003814	0		
57460041451	574600	4145100	0.0001277	0.0004086	0		
57461041451	574610	4145100	0.0001369	0.0004357	0		
57462041451	574620	4145100	0.0001428	0.0004537	0		
57463041451	574630	4145100	0.000145	0.0004601	0		
57464041451	574640	4145100	0.0001432	0.0004542	0		
57465041451	574650	4145100	0	0	0		
57459041451	574590	4145110	0	0	0		
57460041451	574600	4145110	0	0	0		
57461041451	574610	4145110	0	0	0		
57462041451	574620	4145110	0	0	0		
57463041451	574630	4145110	0	0	0		
57464041451	574640	4145110	0	0	0		
57465041451	574650	4145110	0	0	0		
57466041451	574660	4145110	0	0	0		
57460041451	574600	4145120	0	0	0		
57461041451	574610	4145120	0	0	0		
57462041451	574620	4145120	0	0	0		
57463041451	574630	4145120	0	0	0		
57464041451	574640	4145120	0	0	0		
57465041451	574650	4145120	0	0	0		
57466041451	574660	4145120	0	0	0		
57460041451	574600	4145130	0	0	0		
57462041451	574620	4145130	0	0	0		
57463041451	574630	4145130	0	0	0		
57464041451	574640	4145130	0	0	0		
57465041451	574650	4145130	0	0	0		
57463041451	574630	4145140	0	0	0		
57464041451	574640	4145140	0	0	0		
57459041451	574590	4145150	0	0	0		
57460041451	574600	4145150	0	0	0		
57460041451	574600	4145160	0	0	0		
57461041451	574610	4145160	0	0	0		
57461041451	574610	4145170	0	0	0		

Garvey Reservoir Rehab - Mitigated Standby Generator

Construction Modeling Assumptions

AERMOD Sources

Volume Sources		
Offroad Construction Exhaust		
Release Height	3.66	m
Emissions rate	1	g/s
Init Vert Dimension	3.4	m
Line Volume		
Onroad Hauling Exhaust		
Plume Height	7.315	m
Plume Width	20	m
Release Height	3.66	m
Emissions rate	1	g/s

Meteorology:

SCAQMD	Pico	Rivera	2010 - 2012, 2015 - 2016

SCAQMD Met Data

https://www.aqmd.gov/home/air-quality/meteorological-data/data-for-aermod

AERMOD Sources

Garvey Reservoir Rehab - Mitigated Standby Generator

Health Risk Assessment Risk Factors

Residential Risk	Abbreviation	UOM	3rd Trimester	0<2	2<16	16<30
Daily Breathing Rate (95th %'ile)	DBR	L/kg-day	361	1090	572	261
Fraction Of Time At Home [a]	FAH	unitless	1	1	1	0.73
Exposure Frequency	EF	days/year	0.96	0.96	0.96	0.96
Age Sensitivity Factor	ASF	unitless	10	10	3	1
Inhalation Absorption Factor	A	unitless	1	1	1	1
Conversion Factor	CF_1	m^3/L	0.001	0.001	0.001	0.001
Conversion Factor	CF_2	$\mu g/m^3$	0.001	0.001	0.001	0.001
Cancer Potency Factor (diesel exhaust)	CPF	$mg/kg\text{-}day^{-1}$	1.1	1.1	1.1	1.1
Averaging Time (for residential exposure)	AT	years	70.00	70.00	70.00	70.00

[a] assume school or daycare will have cancer risk of >1 per million

Garvey Reservoir Rehab - Mitigated Standby Generator

Health Risk Assessment Exposure Duration Assumptions for Offroad Equipment

Residential Receptors

			Start Date	*9/1/2025*	*12/1/2025*
			End Date	*11/30/2025*	*12/1/2027*
	9/1/2025	*1/31/2027*	*Days*	*90*	*730*
Phase	Start Date	End Date	Duration (days)	3rd Tri	0<2
Demolition - 2025	9/1/2025	11/30/2025	91	91	0
Demolition - 2026			1	0	0
Site Preparation - 2025	11/1/2025	12/31/2025	61	30	31
Site Preparation - 2026	1/1/2026	12/31/2025	0	0	0
Grading - 2025	1/1/2026	2/28/2026	59	0	59
Grading - 2026			1	0	0
Infrastructure - 2025	3/1/2026	10/31/2026	245	0	245
Infrastructure - 2026			1	0	0
Paving - 2025	11/1/2026	1/31/2027	92	0	92
Architectural Coating - 2026			1	0	0

Intake Factor for Inhalation, IF (m^3/kg-day)

Phase	Year	Year	Equation	3rd Trimester	0<2
Demolition - 2025		2025		0.012329142	0
Demolition - 2026		1900	$\frac{DBR \cdot FAH \cdot EF \cdot ED \cdot ASF \cdot A \cdot CF_1}{AT}$	0	0
Site Preparation - 2025		2025		0.004064552	0.012681554
Site Preparation - 2026		2026		0	0
Grading - 2025		2026		0	0.02413586
Grading - 2026		1900		0	0
Infrastructure - 2025		2026		0	0.100225183
Infrastructure - 2026		1900		0	0
Paving - 2025		2026		0	0.037635579
Architectural Coating - 2026		1900		0	0

Risk Calculation Part 1, R1

Equation	3rd Trimester	0<2
	1.35621E-05	0
	0	0
	4.47101E-06	1.39497E-05
$IF \cdot CPF \cdot CF_2$	0	0
	0	2.65494E-05
	0	0
	0	0.000110248
	0	0
	0	4.13991E-05
	0	0

Exposure Durations

Garvey Reservoir Rehab - Mitigated Standby Generator

Offroad DPM Emissions, Ground Level Concentrations and Health Risk Calculations
Residential Receptors

Phase	Year	Emissions (lbs/day)	Work Hours Per Day	Emissions (g/s)
Demolition - 2025	2025	0.010	10	0.000125997
Demolition - 2026	1900		10	0
Site Preparation - 2025	2025	0.020	10	0.000251994
Site Preparation - 2026	2026	0.020	10	0.000251994
Grading - 2025	2026	0.005	10	6.29986E-05
Grading - 2026	1900		10	0
Infrastructure - 2025	2026	0.030	10	0.000377992
Infrastructure - 2026	1900		10	0
Paving - 2025	2026	0.040	10	0.000503989
Architectural Coating - 2026	1900		10	0

			AERMOD Column Identifier:	*4*	*4*	*4*	*4*	*4*	*4*	*4*	*4*	*4*	*4*				
Garvey Reservoir Rehab - Mitigated Standby Generator			Demolition - 2025	Demolition - 2026	Site Preparation - 2025	Site Preparation - 202	Grading - 2025	Grading - 2026	Infrastructure - 202	Infrastructure - 2026	Paving - 2025	Architectural Coating - 2	Child Risk			
Unique Identifier	X (UTM)	Y (UTM)	2025	1900	2025	2026	2026	1900	2026	1900	2026	1900	3rd Trimester	0<2	Total	per million
396166.283767377.2	396166.28	3767377	5.04367E-06	0	1.00873E-05	1.00873E-05	2.52183E-06	0	1.5131E-05	0	2.01747E-05	0	1.13503E-10	2.71104E-09	2.82454E-09	0.0028245
396266.283767377.2	396266.28	3767377	5.58924E-06	0	1.11785E-05	1.11785E-05	2.79462E-06	0	1.67677E-05	0	2.23569E-05	0	1.25781E-10	3.00429E-09	3.13007E-09	0.0031301
396366.283767377.2	396366.28	3767377	6.40948E-06	0	1.2819E-05	1.2819E-05	3.20474E-06	0	1.92284E-05	0	2.56379E-05	0	1.44239E-10	3.44518E-09	3.58942E-09	0.0035894
396466.283767377.2	396466.28	3767377	7.26878E-06	0	1.45376E-05	1.45376E-05	3.63439E-06	0	2.18063E-05	0	2.90751E-05	0	1.63577E-10	3.90707E-09	4.07065E-09	0.0040706
396566.283767377.2	396566.28	3767377	8.33598E-06	0	1.6672E-05	1.6672E-05	4.16799E-06	0	2.50079E-05	0	3.33439E-05	0	1.87593E-10	4.4807E-09	4.6683E-09	0.0046683
396666.283767377.2	396666.28	3767377	9.26962E-06	0	1.85392E-05	1.85392E-05	4.63481E-06	0	2.78088E-05	0	3.70785E-05	0	2.08604E-10	4.98255E-09	5.19115E-09	0.0051912
396766.283767377.2	396766.28	3767377	1.00823E-05	0	2.01646E-05	2.01646E-05	5.04115E-06	0	3.02469E-05	0	4.03292E-05	0	2.26893E-10	5.41937E-09	5.64627E-09	0.0056463
396866.283767377.2	396866.28	3767377	1.09517E-05	0	2.19034E-05	2.19034E-05	5.47584E-06	0	3.2855E-05	0	4.38067E-05	0	2.46457E-10	5.88668E-09	6.13314E-09	0.0061331
396966.283767377.2	396966.28	3767377	1.20189E-05	0	2.40378E-05	2.40378E-05	6.00944E-06	0	3.60566E-05	0	4.80755E-05	0	2.70474E-10	6.46031E-09	6.73078E-09	0.0067308
397066.283767377.2	397066.28	3767377	1.27081E-05	0	2.54162E-05	2.54162E-05	6.35404E-06	0	3.81242E-05	0	5.08323E-05	0	2.85984E-10	6.83077E-09	7.11675E-09	0.0071168
397166.283767377.2	397166.28	3767377	1.28782E-05	0	2.57564E-05	2.57564E-05	6.43909E-06	0	3.86345E-05	0	5.15127E-05	0	2.89811E-10	6.9222E-09	7.21201E-09	0.007212
397266.283767377.2	397266.28	3767377	1.26438E-05	0	2.52876E-05	2.52876E-05	6.32191E-06	0	3.79315E-05	0	5.05753E-05	0	2.84537E-10	6.79623E-09	7.08077E-09	0.0070808
397366.283767377.2	397366.28	3767377	1.26186E-05	0	2.52372E-05	2.52372E-05	6.30931E-06	0	3.78559E-05	0	5.04745E-05	0	2.8397E-10	6.78268E-09	7.06665E-09	0.0070667
397466.283767377.2	397466.28	3767377	1.23213E-05	0	2.46425E-05	2.46425E-05	6.16063E-06	0	3.69638E-05	0	4.92851E-05	0	2.77279E-10	6.62285E-09	6.90013E-09	0.0069001
397566.283767377.2	397566.28	3767377	1.16119E-05	0	2.32238E-05	2.32238E-05	5.80595E-06	0	3.48357E-05	0	4.64476E-05	0	2.61315E-10	6.24156E-09	6.50287E-09	0.0065029
397666.283767377.2	397666.28	3767377	1.07324E-05	0	2.14649E-05	2.14649E-05	5.36622E-06	0	3.21973E-05	0	4.29298E-05	0	2.41524E-10	5.76884E-09	6.01036E-09	0.0060104
397766.283767377.2	397766.28	3767377	9.55059E-06	0	1.91012E-05	1.91012E-05	4.77529E-06	0	2.86518E-05	0	3.82024E-05	0	2.14927E-10	5.13357E-09	5.3485E-09	0.0053485
397866.283767377.2	397866.28	3767377	8.54387E-06	0	1.70877E-05	1.70877E-05	4.27194E-06	0	2.56316E-05	0	3.41755E-05	0	1.92272E-10	4.59245E-09	4.78472E-09	0.0047847
396166.283767477.2	396166.28	3767477	5.33094E-06	0	1.06619E-05	1.06619E-05	2.66547E-06	0	1.59928E-05	0	2.13238E-05	0	1.19968E-10	2.86546E-09	2.98542E-09	0.0029854
396266.283767477.2	396266.28	3767477	5.88785E-06	0	1.17757E-05	1.17757E-05	2.94393E-06	0	1.76636E-05	0	2.35514E-05	0	1.32501E-10	3.1648E-09	3.2973E-09	0.0032973
396366.283767477.2	396366.28	3767477	6.86937E-06	0	1.37387E-05	1.37387E-05	3.43468E-06	0	2.06081E-05	0	2.74775E-05	0	1.54589E-10	3.69238E-09	3.84697E-09	0.003847
396466.283767477.2	396466.28	3767477	7.9605E-06	0	1.5921E-05	1.5921E-05	3.98025E-06	0	2.38815E-05	0	3.1842E-05	0	1.79144E-10	4.27888E-09	4.45802E-09	0.004458
396566.283767477.2	396566.28	3767477	9.2104E-06	0	1.84208E-05	1.84208E-05	4.6052E-06	0	2.76312E-05	0	3.68416E-05	0	2.07271E-10	4.95072E-09	5.15799E-09	0.005158
396666.283767477.2	396666.28	3767477	1.05308E-05	0	2.10617E-05	2.10617E-05	5.26542E-06	0	3.15925E-05	0	4.21234E-05	0	2.36987E-10	5.66048E-09	5.89746E-09	0.0058975
396766.283767477.2	396766.28	3767477	1.19345E-05	0	2.38689E-05	2.38689E-05	5.96723E-06	0	3.58034E-05	0	4.77378E-05	0	2.68574E-10	6.41494E-09	6.68351E-09	0.0066835
396866.283767477.2	396866.28	3767477	1.343E-05	0	2.68601E-05	2.68601E-05	6.71502E-06	0	4.02901E-05	0	5.37202E-05	0	3.02231E-10	7.21883E-09	7.52106E-09	0.0075211
396966.283767477.2	396966.28	3767477	1.52066E-05	0	3.04132E-05	3.04132E-05	7.6033E-06	0	4.56198E-05	0	6.08264E-05	0	3.42211E-10	8.17376E-09	8.51597E-09	0.008516
397066.283767477.2	397066.28	3767477	1.65649E-05	0	3.31297E-05	3.31297E-05	8.28243E-06	0	4.96946E-05	0	6.62594E-05	0	3.72777E-10	8.90384E-09	9.27661E-09	0.0092766
397166.283767477.2	397166.28	3767477	1.71457E-05	0	3.42914E-05	3.42914E-05	8.57285E-06	0	5.14371E-05	0	6.85828E-05	0	3.85848E-10	9.21605E-09	9.6019E-09	0.0096019
397266.283767477.2	397266.28	3767477	1.70021E-05	0	3.40041E-05	3.40041E-05	8.50103E-06	0	5.10062E-05	0	6.80083E-05	0	3.82616E-10	9.13884E-09	9.52146E-09	0.0095215
397366.283767477.2	397366.28	3767477	1.66858E-05	0	3.33716E-05	3.33716E-05	8.34291E-06	0	5.00574E-05	0	6.67432E-05	0	3.75499E-10	8.96885E-09	9.34435E-09	0.0093444
397466.283767477.2	397466.28	3767477	1.61919E-05	0	3.23838E-05	3.23838E-05	8.09595E-06	0	4.85757E-05	0	6.47676E-05	0	3.64384E-10	8.70337E-09	9.06775E-09	0.0090678
397566.283767477.2	397566.28	3767477	1.50226E-05	0	3.00453E-05	3.00453E-05	7.51132E-06	0	4.50679E-05	0	6.00906E-05	0	3.38071E-10	8.07488E-09	8.41295E-09	0.008413
397666.283767477.2	397666.28	3767477	1.3517E-05	0	2.7034E-05	2.7034E-05	6.75849E-06	0	4.05509E-05	0	5.40679E-05	0	3.04187E-10	7.26556E-09	7.56975E-09	0.0075698
397766.283767477.2	397766.28	3767477	1.1913E-05	0	2.38261E-05	2.38261E-05	5.95652E-06	0	3.57391E-05	0	4.76521E-05	0	2.68092E-10	6.40342E-09	6.67151E-09	0.0066715
397866.283767477.2	397866.28	3767477	1.0386E-05	0	2.07719E-05	2.07719E-05	5.19298E-06	0	3.11579E-05	0	4.15438E-05	0	2.33726E-10	5.58259E-09	5.81632E-09	0.0058163
396166.283767577.2	396166.28	3767577	5.5086E-06	0	1.10172E-05	1.10172E-05	2.7543E-06	0	1.65258E-05	0	2.20344E-05	0	1.23966E-10	2.96095E-09	3.08491E-09	0.0030849
396266.283767577.2	396266.28	3767577	6.2041E-06	0	1.24082E-05	1.24082E-05	3.10205E-06	0	1.86123E-05	0	2.48164E-05	0	1.39618E-10	3.33479E-09	3.47441E-09	0.0034744
396366.283767577.2	396366.28	3767577	7.20704E-06	0	1.44141E-05	1.44141E-05	3.60352E-06	0	2.16211E-05	0	2.88282E-05	0	1.62188E-10	3.87388E-09	4.03607E-09	0.0040361
396466.283767577.2	396466.28	3767577	8.51237E-06	0	1.70247E-05	1.70247E-05	4.25619E-06	0	2.55371E-05	0	3.40495E-05	0	1.91563E-10	4.57552E-09	4.76708E-09	0.0047671
396566.283767577.2	396566.28	3767577	1.01466E-05	0	2.02931E-05	2.02931E-05	5.07328E-06	0	3.04397E-05	0	4.05862E-05	0	2.28339E-10	5.45391E-09	5.68225E-09	0.0056823

Garvey Reservoir Rehab - Mitigated Standby Generator			Demolition - 2025	Demolition - 2026	ite Preparation - 202	te Preparation - 202	Grading - 2025	Grading - 2026	nfrastructure - 202	nfrastructure - 202	Paving - 2025	itectural Coating -	Child Risk			
Unique Identifier	X (UTM)	Y (UTM)	2025	1900	2025	2026	2026	1900	2026	1900	2026	1900	3rd Trimester	0<2	Total	per million
396666.283767577.2	396666.28	3767577	1.21146E-05	0	2.42293E-05	2.42293E-05	6.05732E-06	0	3.63439E-05	0	4.84585E-05	0	2.72629E-10	6.51178E-09	6.78441E-09	0.0067844
396766.283767577.2	396766.28	3767577	1.38962E-05	0	2.77925E-05	2.77925E-05	6.94812E-06	0	4.16887E-05	0	5.55849E-05	0	3.12722E-10	7.46942E-09	7.78214E-09	0.0077821
396866.283767577.2	396866.28	3767577	1.66694E-05	0	3.33389E-05	3.33389E-05	8.33472E-06	0	5.00083E-05	0	6.66777E-05	0	3.7513E-10	8.96005E-09	9.33518E-09	0.0093352
396966.283767577.2	396966.28	3767577	1.95157E-05	0	3.90314E-05	3.90314E-05	9.75785E-06	0	5.85471E-05	0	7.80628E-05	0	4.39183E-10	1.049E-08	1.09291E-08	0.0109291
397066.283767577.2	397066.28	3767577	2.21188E-05	0	4.42376E-05	4.42376E-05	1.10594E-05	0	6.63564E-05	0	8.84752E-05	0	4.97763E-10	1.18892E-08	1.23869E-08	0.0123869
397166.283767577.2	397166.28	3767577	2.38929E-05	0	4.77857E-05	4.77857E-05	1.19464E-05	0	7.16786E-05	0	9.55714E-05	0	5.37686E-10	1.28427E-08	1.33804E-08	0.0133804
397266.283767577.2	397266.28	3767577	2.4165E-05	0	4.833E-05	4.833E-05	1.20825E-05	0	7.2495E-05	0	9.666E-05	0	5.43811E-10	1.2989E-08	1.35328E-08	0.0135328
397366.283767577.2	397366.28	3767577	2.34884E-05	0	4.69768E-05	4.69768E-05	1.17442E-05	0	7.04652E-05	0	9.39536E-05	0	5.28585E-10	1.26253E-08	1.31539E-08	0.0131539
397466.283767577.2	397466.28	3767577	2.2488E-05	0	4.4976E-05	4.4976E-05	1.1244E-05	0	6.7464E-05	0	8.99519E-05	0	5.06071E-10	1.20876E-08	1.25937E-08	0.0125937
397566.283767577.2	397566.28	3767577	2.02364E-05	0	4.04728E-05	4.04728E-05	1.01182E-05	0	6.07092E-05	0	8.09457E-05	0	4.55402E-10	1.08774E-08	1.13328E-08	0.0113328
397666.283767577.2	397666.28	3767577	1.75867E-05	0	3.51734E-05	3.51734E-05	8.79335E-06	0	5.27601E-05	0	7.03468E-05	0	3.95772E-10	9.45309E-09	9.84886E-09	0.0098489
397766.283767577.2	397766.28	3767577	1.49294E-05	0	2.98588E-05	2.98588E-05	7.46471E-06	0	4.47882E-05	0	5.97176E-05	0	3.35973E-10	8.02476E-09	8.36074E-09	0.0083607
397866.283767577.2	397866.28	3767577	1.25695E-05	0	2.5139E-05	2.5139E-05	6.28474E-06	0	3.77084E-05	0	5.02779E-05	0	2.82865E-10	6.75627E-09	7.03913E-09	0.0070391
396166.283767677.2	396166.28	3767677	5.72153E-06	0	1.14431E-05	1.14431E-05	2.86077E-06	0	1.71646E-05	0	2.28861E-05	0	1.28758E-10	3.0754E-09	3.20416E-09	0.0032042
396266.283767677.2	396266.28	3767677	6.5002E-06	0	1.30004E-05	1.30004E-05	3.2501E-06	0	1.95006E-05	0	2.60008E-05	0	1.46281E-10	3.49395E-09	3.64023E-09	0.0036402
396366.283767677.2	396366.28	3767677	7.63417E-06	0	1.52683E-05	1.52683E-05	3.81709E-06	0	2.29025E-05	0	3.05367E-05	0	1.718E-10	4.10347E-09	4.27527E-09	0.0042753
396466.283767677.2	396466.28	3767677	9.14614E-06	0	1.82923E-05	1.82923E-05	4.57307E-06	0	2.74384E-05	0	3.65846E-05	0	2.05825E-10	4.91618E-09	5.122E-09	0.005122
396566.283767677.2	396566.28	3767677	1.10109E-05	0	2.20218E-05	2.20218E-05	5.50545E-06	0	3.30327E-05	0	4.40436E-05	0	2.4779E-10	5.91851E-09	6.1663E-09	0.0061663
396666.283767677.2	396666.28	3767677	1.30911E-05	0	2.61822E-05	2.61822E-05	6.54556E-06	0	3.92733E-05	0	5.23644E-05	0	2.94603E-10	7.03665E-09	7.33126E-09	0.0073313
396766.283767677.2	396766.28	3767677	1.63381E-05	0	3.26761E-05	3.26761E-05	8.16903E-06	0	4.90142E-05	0	6.53522E-05	0	3.67673E-10	8.78193E-09	9.14961E-09	0.0091496
396866.283767677.2	396866.28	3767677	2.09029E-05	0	4.18059E-05	4.18059E-05	1.04515E-05	0	6.27088E-05	0	8.36118E-05	0	4.70401E-10	1.12356E-08	1.1706E-08	0.011706
396966.283767677.2	396966.28	3767677	2.63082E-05	0	5.26164E-05	5.26164E-05	1.31541E-05	0	7.89247E-05	0	0.000105233	0	5.92042E-10	1.4141E-08	1.47331E-08	0.0147331
397066.283767677.2	397066.28	3767677	3.13191E-05	0	6.26383E-05	6.26383E-05	1.56596E-05	0	9.39574E-05	0	0.000125277	0	7.04808E-10	1.68345E-08	1.75393E-08	0.0175393
397166.283767677.2	397166.28	3767677	3.54468E-05	0	7.08936E-05	7.08936E-05	1.77234E-05	0	0.00010634	0	0.000141787	0	7.97697E-10	1.90531E-08	1.98508E-08	0.0198508
397266.283767677.2	397266.28	3767677	3.77702E-05	0	7.55404E-05	7.55404E-05	1.88851E-05	0	0.000113311	0	0.000151081	0	8.49983E-10	2.0302E-08	2.1152E-08	0.021152
397366.283767677.2	397366.28	3767677	3.62431E-05	0	7.24862E-05	7.24862E-05	1.81216E-05	0	0.000108729	0	0.000144972	0	8.15617E-10	1.94812E-08	2.02968E-08	0.0202968
397466.283767677.2	397466.28	3767677	3.36261E-05	0	6.72523E-05	6.72523E-05	1.68131E-05	0	0.000100878	0	0.000134505	0	7.56725E-10	1.80745E-08	1.88312E-08	0.0188312
397566.283767677.2	397566.28	3767677	2.87362E-05	0	5.74724E-05	5.74724E-05	1.43681E-05	0	8.62086E-05	0	0.000114945	0	6.46681E-10	1.54461E-08	1.60928E-08	0.0160928
397666.283767677.2	397666.28	3767677	2.35426E-05	0	4.70852E-05	4.70852E-05	1.17713E-05	0	7.06277E-05	0	9.41703E-05	0	5.29804E-10	1.26545E-08	1.31843E-08	0.0131843
397766.283767677.2	397766.28	3767677	1.89475E-05	0	3.78949E-05	3.78949E-05	9.47373E-06	0	5.68424E-05	0	7.57898E-05	0	4.26395E-10	1.01845E-08	1.06109E-08	0.0106109
397866.283767677.2	397866.28	3767677	1.52066E-05	0	3.04132E-05	3.04132E-05	7.6033E-06	0	4.56198E-05	0	6.08264E-05	0	3.42211E-10	8.17376E-09	8.51597E-09	0.008516
396166.283767777.2	396166.28	3767777	5.86265E-06	0	1.17253E-05	1.17253E-05	2.93133E-06	0	1.7588E-05	0	2.34506E-05	0	1.31934E-10	3.15126E-09	3.28319E-09	0.0032832
396266.283767777.2	396266.28	3767777	6.81645E-06	0	1.36329E-05	1.36329E-05	3.40822E-06	0	2.04493E-05	0	2.72658E-05	0	1.53398E-10	3.66394E-09	3.81733E-09	0.0038173
396366.283767777.2	396366.28	3767777	7.98822E-06	0	1.59764E-05	1.59764E-05	3.99411E-06	0	2.39647E-05	0	3.19529E-05	0	1.79768E-10	4.29378E-09	4.47355E-09	0.0044735
396466.283767777.2	396466.28	3767777	9.58461E-06	0	1.91692E-05	1.91692E-05	4.7923E-06	0	2.87538E-05	0	3.83384E-05	0	2.15693E-10	5.15186E-09	5.36755E-09	0.0053676
396566.283767777.2	396566.28	3767777	1.15552E-05	0	2.31104E-05	2.31104E-05	5.7776E-06	0	3.46656E-05	0	4.62208E-05	0	2.60039E-10	6.21108E-09	6.47112E-09	0.0064711
396666.283767777.2	396666.28	3767777	1.44002E-05	0	2.88004E-05	2.88004E-05	7.20011E-06	0	4.32007E-05	0	5.76009E-05	0	3.24064E-10	7.74032E-09	8.06438E-09	0.0080644
396766.283767777.2	396766.28	3767777	1.8955E-05	0	3.791E-05	3.791E-05	9.47751E-06	0	5.68651E-05	0	7.58201E-05	0	4.26565E-10	1.01886E-08	1.06152E-08	0.0106152
396866.283767777.2	396866.28	3767777	2.5556E-05	0	5.1112E-05	5.1112E-05	1.2778E-05	0	7.6668E-05	0	0.000102224	0	5.75114E-10	1.37367E-08	1.43118E-08	0.0143118
396966.283767777.2	396966.28	3767777	3.46606E-05	0	6.93212E-05	6.93212E-05	1.73303E-05	0	0.000103982	0	0.000138642	0	7.80004E-10	1.86305E-08	1.94105E-08	0.0194105
397066.283767777.2	397066.28	3767777	4.60507E-05	0	9.21014E-05	9.21014E-05	2.30254E-05	0	0.000138152	0	0.000184203	0	1.03633E-09	2.47529E-08	2.57892E-08	0.0257892
397166.283767777.2	397166.28	3767777	5.74434E-05	0	0.000114887	0.000114887	2.87217E-05	0	0.00017233	0	0.000229774	0	1.29271E-09	3.08766E-08	3.21693E-08	0.0321693
397266.283767777.2	397266.28	3767777	6.55576E-05	0	0.000131115	0.000131115	3.27788E-05	0	0.000196673	0	0.00026223	0	1.47531E-09	3.52381E-08	3.67134E-08	0.0367134
397366.283767777.2	397366.28	3767777	6.38315E-05	0	0.000127663	0.000127663	3.19157E-05	0	0.000191494	0	0.000255326	0	1.43647E-09	3.43103E-08	3.57468E-08	0.0357468
397466.283767777.2	397466.28	3767777	5.54337E-05	0	0.000110867	0.000110867	2.77169E-05	0	0.000166301	0	0.000221735	0	1.24748E-09	2.97964E-08	3.10439E-08	0.0310439
397566.283767777.2	397566.28	3767777	4.32977E-05	0	8.65954E-05	8.65954E-05	2.16488E-05	0	0.000129893	0	0.000173191	0	9.74374E-10	2.32731E-08	2.42475E-08	0.0242475
397666.283767777.2	397666.28	3767777	3.23788E-05	0	6.47575E-05	6.47575E-05	1.61894E-05	0	9.71363E-05	0	0.000129515	0	7.28654E-10	1.7404E-08	1.81327E-08	0.0181327
397766.283767777.2	397766.28	3767777	2.42141E-05	0	4.84283E-05	4.84283E-05	1.21071E-05	0	7.26424E-05	0	9.68566E-05	0	5.44917E-10	1.30154E-08	1.35604E-08	0.0135604
397866.283767777.2	397866.28	3767777	1.84473E-05	0	3.68945E-05	3.68945E-05	9.22363E-06	0	5.53418E-05	0	7.3789E-05	0	4.15138E-10	9.91565E-09	1.03308E-08	0.0103308
396166.283767877.2	396166.28	3767877	5.95085E-06	0	1.19017E-05	1.19017E-05	2.97542E-06	0	1.78525E-05	0	2.38034E-05	0	1.33918E-10	3.19866E-09	3.33258E-09	0.0033326
396266.283767877.2	396266.28	3767877	6.95253E-06	0	1.39051E-05	1.39051E-05	3.47626E-06	0	2.08576E-05	0	2.78101E-05	0	1.5646E-10	3.73708E-09	3.89354E-09	0.0038935
396366.283767877.2	396366.28	3767877	8.23644E-06	0	1.64729E-05	1.64729E-05	4.11822E-06	0	2.47093E-05	0	3.29458E-05	0	1.85353E-10	4.4272E-09	4.61255E-09	0.0046126
396466.283767877.2	396466.28	3767877	9.88448E-06	0	1.9769E-05	1.9769E-05	4.94224E-06	0	2.96534E-05	0	3.95379E-05	0	2.22441E-10	5.31305E-09	5.53549E-09	0.0055355
396566.283767877.2	396566.28	3767877	1.2102E-05	0	2.42041E-05	2.42041E-05	6.05102E-06	0	3.63061E-05	0	4.84081E-05	0	2.72345E-10	6.50501E-09	6.77735E-09	0.0067774
397466.283767877.2	397466.28	3767877	0.000105193	0	0.000210385	0.000210385	5.25963E-05	0	0.000315578	0	0.00042077	0	2.36726E-09	5.65425E-08	5.89097E-08	0.0589097
397566.283767877.2	397566.28	3767877	6.69297E-05	0	0.000133859	0.000133859	3.34649E-05	0	0.000200789	0	0.000267719	0	1.50619E-09	3.59757E-08	3.74818E-08	0.0374818
397666.283767877.2	397666.28	3767877	4.1002E-05	0	8.2004E-05	8.2004E-05	2.0501E-05	0	0.000123006	0	0.000164008	0	9.22712E-10	2.20391E-08	2.29619E-08	0.0229619
397766.283767877.2	397766.28	3767877	2.83217E-05	0	5.66433E-05	5.66433E-05	1.41608E-05	0	8.4965E-05	0	0.000113287	0	6.37353E-10	1.52233E-08	1.58606E-08	0.0158606
397866.283767877.2	397866.28	3767877	2.1921E-05	0	4.3842E-05	4.3842E-05	1.09605E-05	0	6.5763E-05	0	8.7684E-05	0	4.93312E-10	1.17828E-08	1.22761E-08	0.0122761
396166.283767977.2	396166.28	3767977	5.95085E-06	0	1.19017E-05	1.19017E-05	2.97542E-06	0	1.78525E-05	0	2.38034E-05	0	1.33918E-10	3.19866E-09	3.33258E-09	0.0033326
396266.283767977.2	396266.28	3767977	6.99033E-06	0	1.39807E-05	1.39807E-05	3.49516E-06	0	2.0971E-05	0	2.79613E-05	0	1.57311E-10	3.7574E-09	3.91471E-09	0.0039147
396366.283767977.2	396366.28	3767977	8.3133E-06	0	1.66266E-05	1.66266E-05	4.15665E-06	0	2.49399E-05	0	3.32532E-05	0	1.87083E-10	4.46851E-09	4.65559E-09	0.0046556
396466.283767977.2	396466.28	3767977	9.9941E-06	0	1.99882E-05	1.99882E-05	4.99705E-06	0	2.99823E-05	0	3.99764E-05	0	2.24908E-10	5.37197E-09	5.59687E-09	0.0055969
397466.283767977.2	397466.28	3767977	0.000206639	0	0.000413278	0.000413278	0.00010332	0	0.000619918	0	0.000826557	0	4.65022E-09	1.11071E-07	1.15722E-07	0.1157217
397566.283767977.2	397566.28	3767977	9.48709E-05	0	0.000189742	0.000189742	4.74354E-05	0	0.000284613	0	0.000379483	0	2.13498E-09	5.09944E-08	5.31294E-08	0.0531294
397666.283767977.2	397666.28	3767977	5.20469E-05	0	0.000104094	0.000104094	2.60235E-05	0	0.000156141	0	0.000208188	0	1.17127E-09	2.79759E-08	2.91472E-08	0.0291472
397766.283767977.2	397766.28	3767977	3.75472E-05	0	7.50943E-05	7.50943E-05	1.87736E-05	0	0.000112642	0	0.000150189	0	8.44964E-10	2.01821E-08	2.10271E-08	0.0210271
397866.283767977.2	397866.28	3767977	2.49752E-05	0	4.99503E-05	4.99503E-05	1.24876E-05	0	7.49255E-05	0	9.99007E-05	0	5.62043E-10	1.34245E-08	1.39865E-08	0.0139865
396166.283768077.2	396166.28	3768077	6.00251E-06	0	1.2005E-05	1.2005E-05	3.00125E-06	0	1.80075E-05	0	2.401E-05	0	1.35081E-10	3.22643E-09	3.36151E-09	0.0033615

Garvey Reservoir Rehab - Mitigated Standby Generator			Demolition - 2025	Demolition - 2026	ite Preparation - 202	te Preparation - 202	Grading - 2025	Grading - 2026	nfrastructure - 202	nfrastructure - 202	Paving - 2025	itectural Coating -	Child Risk			
Unique Identifier	X (UTM)	Y (UTM)	2025	1900	2025	2026	2026	1900	2026	1900	2026	1900	3rd Trimester	0<2	Total	per million
396266.283768077.2	396266.28	3768077	6.95757E-06	0	1.39151E-05	1.39151E-05	3.47878E-06	0	2.08727E-05	0	2.78303E-05	0	1.56574E-10	3.73979E-09	3.89636E-09	0.0038964
396366.283768077.2	396366.28	3768077	8.2755E-06	0	1.6551E-05	1.6551E-05	4.13775E-06	0	2.48265E-05	0	3.3102E-05	0	1.86232E-10	4.44819E-09	4.63443E-09	0.0046344
396466.283768077.2	396466.28	3768077	1.0076E-05	0	2.0152E-05	2.0152E-05	5.038E-06	0	3.0228E-05	0	4.0304E-05	0	2.26751E-10	5.41599E-09	5.64274E-09	0.0056427
397466.283768077.2	397466.28	3768077	0.000519887	0	0.001039774	0.001039774	0.000259944	0	0.001559662	0	0.002079549	0	1.16996E-08	2.79447E-07	2.91146E-07	0.2911461
397566.283768077.2	397566.28	3768077	0.000168757	0	0.000337514	0.000337514	8.43784E-05	0	0.000506271	0	0.000675028	0	3.79772E-09	9.07092E-08	9.45069E-08	0.0945069
397666.283768077.2	397666.28	3768077	7.82896E-05	0	0.000156579	0.000156579	3.91448E-05	0	0.000234869	0	0.000313159	0	1.76184E-09	4.20818E-08	4.38436E-08	0.0438436
397766.283768077.2	397766.28	3768077	4.48777E-05	0	8.97554E-05	8.97554E-05	2.24388E-05	0	0.000134633	0	0.000179511	0	1.00993E-09	2.41224E-08	2.51323E-08	0.0251323
397866.283768077.2	397866.28	3768077	2.87475E-05	0	5.74951E-05	5.74951E-05	1.43738E-05	0	8.62426E-05	0	0.00011499	0	6.46936E-10	1.54522E-08	1.60991E-08	0.0160991
396166.283768177.2	396166.28	3768177	5.94959E-06	0	1.18992E-05	1.18992E-05	2.97479E-06	0	1.78488E-05	0	2.37984E-05	0	1.3389E-10	3.19799E-09	3.33188E-09	0.0033319
396266.283768177.2	396266.28	3768177	6.91977E-06	0	1.38395E-05	1.38395E-05	3.45988E-06	0	2.07593E-05	0	2.76791E-05	0	1.55723E-10	3.71947E-09	3.87519E-09	0.0038752
396366.283768177.2	396366.28	3768177	8.22006E-06	0	1.64401E-05	1.64401E-05	4.11003E-06	0	2.46602E-05	0	3.28802E-05	0	1.84985E-10	4.41839E-09	4.60338E-09	0.0046034
396466.283768177.2	396466.28	3768177	9.93362E-06	0	1.98672E-05	1.98672E-05	4.96681E-06	0	2.98009E-05	0	3.97345E-05	0	2.23547E-10	5.33946E-09	5.56301E-09	0.005563
397466.283768177.2	397466.28	3768177	0.000684311	0	0.001368622	0.001368622	0.000342156	0	0.002052933	0	0.002737244	0	1.53998E-08	3.67827E-07	3.83226E-07	0.3832264
397566.283768177.2	397566.28	3768177	0.00021072	0	0.000421441	0.000421441	0.00010536	0	0.000632161	0	0.000842881	0	4.74206E-09	1.13265E-07	1.18007E-07	0.1180071
397666.283768177.2	397666.28	3768177	9.35265E-05	0	0.000187053	0.000187053	4.67632E-05	0	0.000280579	0	0.000374106	0	2.10473E-09	5.02718E-08	5.23765E-08	0.0523765
397766.283768177.2	397766.28	3768177	5.26278E-05	0	0.000105256	0.000105256	2.63139E-05	0	0.000157883	0	0.000210511	0	1.18434E-09	2.82882E-08	2.94725E-08	0.0294725
397866.283768177.2	397866.28	3768177	3.21873E-05	0	6.43745E-05	6.43745E-05	1.60936E-05	0	9.65618E-05	0	0.000128749	0	7.24344E-10	1.73011E-08	1.80254E-08	0.0180254
396166.283768277.2	396166.28	3768277	5.79083E-06	0	1.15817E-05	1.15817E-05	2.89542E-06	0	1.73725E-05	0	2.31633E-05	0	1.30317E-10	3.11265E-09	3.24297E-09	0.003243
396266.283768277.2	396266.28	3768277	6.74841E-06	0	1.34968E-05	1.34968E-05	3.37421E-06	0	2.02452E-05	0	2.69936E-05	0	1.51867E-10	3.62736E-09	3.77923E-09	0.0037792
396366.283768277.2	396366.28	3768277	7.98822E-06	0	1.59764E-05	1.59764E-05	3.99411E-06	0	2.39647E-05	0	3.19529E-05	0	1.79768E-10	4.29378E-09	4.47355E-09	0.0044735
396466.283768277.2	396466.28	3768277	9.62367E-06	0	1.92473E-05	1.92473E-05	4.81183E-06	0	2.8871E-05	0	3.84947E-05	0	2.16572E-10	5.17285E-09	5.38943E-09	0.0053894
397366.283768277.2	397366.28	3768277	0.000551771	0	0.001103542	0.001103542	0.000275885	0	0.001655312	0	0.002207083	0	1.24171E-08	2.96584E-07	3.09002E-07	0.3090015
397466.283768277.2	397466.28	3768277	0.000385114	0	0.000770229	0.000770229	0.000192557	0	0.001155343	0	0.001540457	0	8.66664E-09	2.07004E-07	2.15671E-07	0.2156709
397566.283768277.2	397566.28	3768277	0.000195089	0	0.000390178	0.000390178	9.75445E-05	0	0.000585267	0	0.000780356	0	4.3903E-09	1.04863E-07	1.09253E-07	0.1092534
397666.283768277.2	397666.28	3768277	9.80246E-05	0	0.000196049	0.000196049	4.90123E-05	0	0.000294074	0	0.000392098	0	2.20595E-09	5.26896E-08	5.48955E-08	0.0548955
397766.283768277.2	397766.28	3768277	5.61557E-05	0	0.000112311	0.000112311	2.80779E-05	0	0.000168467	0	0.000224623	0	1.26373E-09	3.01845E-08	3.14482E-08	0.0314482
397866.283768277.2	397866.28	3768277	3.6393E-05	0	7.27861E-05	7.27861E-05	1.81965E-05	0	0.000109179	0	0.000145572	0	8.18992E-10	1.95618E-08	2.03808E-08	0.0203808
396166.283768377.2	396166.28	3768377	5.31834E-06	0	1.06367E-05	1.06367E-05	2.65917E-06	0	1.5955E-05	0	2.12734E-05	0	1.19684E-10	2.85868E-09	2.97837E-09	0.0029784
396266.283768377.2	396266.28	3768377	6.53926E-06	0	1.30785E-05	1.30785E-05	3.26963E-06	0	1.96178E-05	0	2.6157E-05	0	1.4716E-10	3.51494E-09	3.6621E-09	0.0036621
396366.283768377.2	396366.28	3768377	7.68079E-06	0	1.53616E-05	1.53616E-05	3.8404E-06	0	2.30424E-05	0	3.07232E-05	0	1.72849E-10	4.12853E-09	4.30138E-09	0.0043014
396466.283768377.2	396466.28	3768377	9.19024E-06	0	1.83805E-05	1.83805E-05	4.59512E-06	0	2.75707E-05	0	3.67609E-05	0	2.06818E-10	4.93988E-09	5.1467E-09	0.0051467
397266.283768377.2	397266.28	3768377	0.00015728	0	0.00031456	0.00031456	7.86399E-05	0	0.000471839	0	0.000629119	0	3.53944E-09	8.45401E-08	8.80795E-08	0.0880795
397366.283768377.2	397366.28	3768377	0.000219568	0	0.000439136	0.000439136	0.000109784	0	0.000658703	0	0.000878271	0	4.94117E-09	1.18021E-07	1.22962E-07	0.1229619
397466.283768377.2	397466.28	3768377	0.000205181	0	0.000410363	0.000410363	0.000102591	0	0.000615544	0	0.000820726	0	4.61742E-09	1.10288E-07	1.14905E-07	0.1149053
397566.283768377.2	397566.28	3768377	0.000143879	0	0.000287757	0.000287757	7.19394E-05	0	0.000431636	0	0.000575515	0	3.23786E-09	7.73368E-08	8.05747E-08	0.0805747
397666.283768377.2	397666.28	3768377	9.10506E-05	0	0.000182101	0.000182101	4.55253E-05	0	0.000273152	0	0.000364203	0	2.04901E-09	4.8941E-08	5.099E-08	0.05099
397766.283768377.2	397766.28	3768377	5.76135E-05	0	0.000115227	0.000115227	2.88067E-05	0	0.00017284	0	0.000230454	0	1.29654E-09	3.0968E-08	3.22646E-08	0.0322646
397866.283768377.2	397866.28	3768377	3.90201E-05	0	7.80402E-05	7.80402E-05	1.951E-05	0	0.00011706	0	0.00015608	0	8.78111E-10	2.09738E-08	2.18519E-08	0.0218519
396166.283768477.2	396166.28	3768477	5.09155E-06	0	1.01831E-05	1.01831E-05	2.54577E-06	0	1.52746E-05	0	2.03662E-05	0	1.14581E-10	2.73678E-09	2.85136E-09	0.0028514
396266.283768477.2	396266.28	3768477	6.2482E-06	0	1.24964E-05	1.24964E-05	3.1241E-06	0	1.87446E-05	0	2.49928E-05	0	1.4061E-10	3.35849E-09	3.4991E-09	0.0034991
396366.283768477.2	396366.28	3768477	7.24232E-06	0	1.44846E-05	1.44846E-05	3.62116E-06	0	2.1727E-05	0	2.89693E-05	0	1.62982E-10	3.89285E-09	4.05583E-09	0.0040558
396466.283768477.2	396466.28	3768477	8.64215E-06	0	1.72843E-05	1.72843E-05	4.32107E-06	0	2.59264E-05	0	3.45686E-05	0	1.94484E-10	4.64527E-09	4.83976E-09	0.0048398
397166.283768477.2	397166.28	3768477	6.0369E-05	0	0.000120738	0.000120738	3.01845E-05	0	0.000181107	0	0.000241476	0	1.35855E-09	3.24492E-08	3.38077E-08	0.0338077
397266.283768477.2	397266.28	3768477	8.99267E-05	0	0.000179853	0.000179853	4.49634E-05	0	0.00026978	0	0.000359707	0	2.02372E-09	4.83369E-08	5.03606E-08	0.0503606
397366.283768477.2	397366.28	3768477	0.000115415	0	0.000230829	0.000230829	5.77074E-05	0	0.000346244	0	0.000461659	0	2.5973E-09	6.2037E-08	6.46343E-08	0.0646343
397466.283768477.2	397466.28	3768477	0.000116294	0	0.000232588	0.000232588	5.81471E-05	0	0.000348883	0	0.000465177	0	2.61709E-09	6.25097E-08	6.51268E-08	0.0651268
397566.283768477.2	397566.28	3768477	9.7062E-05	0	0.000194124	0.000194124	4.8531E-05	0	0.000291186	0	0.000388248	0	2.18429E-09	5.21721E-08	5.43564E-08	0.0543564
397666.283768477.2	397666.28	3768477	7.12426E-05	0	0.000142485	0.000142485	3.56213E-05	0	0.000213728	0	0.00028497	0	1.60325E-09	3.82939E-08	3.98971E-08	0.0398971
397766.283768477.2	397766.28	3768477	5.18025E-05	0	0.000103605	0.000103605	2.59012E-05	0	0.000155407	0	0.00020721	0	1.16577E-09	2.78446E-08	2.90103E-08	0.0290103
397866.283768477.2	397866.28	3768477	3.70066E-05	0	7.40133E-05	7.40133E-05	1.85033E-05	0	0.00011102	0	0.000148027	0	8.328E-10	1.98916E-08	2.07244E-08	0.0207244
396166.283768577.2	396166.28	3768577	5.20747E-06	0	1.04149E-05	1.04149E-05	2.60373E-06	0	1.56224E-05	0	2.08299E-05	0	1.17189E-10	2.79908E-09	2.91627E-09	0.0029163
396266.283768577.2	396266.28	3768577	5.46828E-06	0	1.09366E-05	1.09366E-05	2.73414E-06	0	1.64048E-05	0	2.18731E-05	0	1.23059E-10	2.93928E-09	3.06233E-09	0.0030623
396366.283768577.2	396366.28	3768577	6.30742E-06	0	1.26148E-05	1.26148E-05	3.15371E-06	0	1.89223E-05	0	2.52297E-05	0	1.41943E-10	3.39033E-09	3.53227E-09	0.0035323
396466.283768577.2	396466.28	3768577	8.04366E-06	0	1.60873E-05	1.60873E-05	4.02183E-06	0	2.4131E-05	0	3.21747E-05	0	1.81015E-10	4.32358E-09	4.50459E-09	0.0045046
396566.283768577.2	396566.28	3768577	9.48003E-06	0	1.89601E-05	1.89601E-05	4.74002E-06	0	2.84401E-05	0	3.79201E-05	0	2.13339E-10	5.09565E-09	5.30899E-09	0.005309
396866.283768577.2	396866.28	3768577	1.81902E-05	0	3.63804E-05	3.63804E-05	9.09511E-06	0	5.45707E-05	0	7.27609E-05	0	4.09354E-10	9.77749E-09	1.01868E-08	0.0101868
396966.283768577.2	396966.28	3768577	2.3685E-05	0	4.73699E-05	4.73699E-05	1.18425E-05	0	7.10549E-05	0	9.47398E-05	0	5.33008E-10	1.2731E-08	1.3264E-08	0.013264
397066.283768577.2	397066.28	3768577	3.14086E-05	0	6.28172E-05	6.28172E-05	1.57043E-05	0	9.42258E-05	0	0.000125634	0	7.06821E-10	1.68825E-08	1.75894E-08	0.0175894
397166.283768577.2	397166.28	3768577	4.28252E-05	0	8.56504E-05	8.56504E-05	2.14126E-05	0	0.000128476	0	0.000171301	0	9.63741E-10	2.30191E-08	2.39829E-08	0.0239829
397266.283768577.2	397266.28	3768577	5.70994E-05	0	0.000114199	0.000114199	2.85497E-05	0	0.000171298	0	0.000228398	0	1.28497E-09	3.06917E-08	3.19767E-08	0.0319767
397366.283768577.2	397366.28	3768577	7.028E-05	0	0.00014056	0.00014056	3.514E-05	0	0.00021084	0	0.00028112	0	1.58159E-09	3.77765E-08	3.93581E-08	0.0393581
397466.283768577.2	397466.28	3768577	7.19709E-05	0	0.000143942	0.000143942	3.59854E-05	0	0.000215913	0	0.000287883	0	1.61964E-09	3.86853E-08	4.0305E-08	0.040305
397566.283768577.2	397566.28	3768577	6.71905E-05	0	0.000134381	0.000134381	3.35953E-05	0	0.000201572	0	0.000268762	0	1.51206E-09	3.61158E-08	3.76279E-08	0.0376279
397666.283768577.2	397666.28	3768577	5.50734E-05	0	0.000110147	0.000110147	2.75367E-05	0	0.00016522	0	0.000220294	0	1.23938E-09	2.96027E-08	3.08421E-08	0.0308421
397766.283768577.2	397766.28	3768577	4.24548E-05	0	8.49095E-05	8.49095E-05	2.12274E-05	0	0.000127364	0	0.000169819	0	9.55405E-10	2.282E-08	2.37754E-08	0.0237754
397866.283768577.2	397866.28	3768577	3.2661E-05	0	6.5322E-05	6.5322E-05	1.63305E-05	0	9.7983E-05	0	0.000130644	0	7.35005E-10	1.75557E-08	1.82907E-08	0.0182907
396166.283768677.2	396166.28	3768677	4.94539E-06	0	9.89078E-06	9.89078E-06	2.4727E-06	0	1.48362E-05	0	1.97816E-05	0	1.11291E-10	2.65822E-09	2.76951E-09	0.0027695
396266.283768677.2	396266.28	3768677	5.61444E-06	0	1.12289E-05	1.12289E-05	2.80722E-06	0	1.68433E-05	0	2.24577E-05	0	1.26348E-10	3.01784E-09	3.14418E-09	0.0031442
396366.283768677.2	396366.28	3768677	6.01889E-06	0	1.20378E-05	1.20378E-05	3.00944E-06	0	1.80567E-05	0	2.40755E-05	0	1.35449E-10	3.23523E-09	3.37068E-09	0.0033707

Garvey Reservoir Rehab - Mitigated Standby Generator			Demolition - 2025	Demolition - 2026	ite Preparation - 202	te Preparation - 202	Grading - 2025	Grading - 2026	nfrastructure - 202	nfrastructure - 202	Paving - 2025	itectural Coating -	Child Risk			
Unique Identifier	X (UTM)	Y (UTM)	2025	1900	2025	2026	2026	1900	2026	1900	2026	1900	3rd Trimester	0<2	Total	per million
396466.283768677.2	396466.28	3768677	7.42376E-06	0	1.48475E-05	1.48475E-05	3.71188E-06	0	2.22713E-05	0	2.9695E-05	0	1.67065E-10	3.99037E-09	4.15744E-09	0.0041574
396566.283768677.2	396566.28	3768677	8.70137E-06	0	1.74027E-05	1.74027E-05	4.35068E-06	0	2.61041E-05	0	3.48055E-05	0	1.95816E-10	4.67711E-09	4.87292E-09	0.0048729
396666.283768677.2	396666.28	3768677	1.03469E-05	0	2.06938E-05	2.06938E-05	5.17345E-06	0	3.10407E-05	0	4.13876E-05	0	2.32847E-10	5.5616E-09	5.79444E-09	0.0057944
396766.283768677.2	396766.28	3768677	1.24951E-05	0	2.49903E-05	2.49903E-05	6.24757E-06	0	3.74854E-05	0	4.99806E-05	0	2.81192E-10	6.71631E-09	6.9975E-09	0.0069975
396866.283768677.2	396866.28	3768677	1.5412E-05	0	3.0824E-05	3.0824E-05	7.70599E-06	0	4.62359E-05	0	6.16479E-05	0	3.46832E-10	8.28415E-09	8.63098E-09	0.008631
396966.283768677.2	396966.28	3768677	1.93305E-05	0	3.8661E-05	3.8661E-05	9.66525E-06	0	5.79915E-05	0	7.7322E-05	0	4.35015E-10	1.03904E-08	1.08254E-08	0.0108254
397066.283768677.2	397066.28	3768677	2.46022E-05	0	4.92044E-05	4.92044E-05	1.23011E-05	0	7.38067E-05	0	9.84089E-05	0	5.5365E-10	1.3224E-08	1.37777E-08	0.0137777
397166.283768677.2	397166.28	3768677	3.12612E-05	0	6.25223E-05	6.25223E-05	1.56306E-05	0	9.37835E-05	0	0.000125045	0	7.03504E-10	1.68033E-08	1.75068E-08	0.0175068
397366.283768677.2	397366.28	3768677	4.70952E-05	0	9.41905E-05	9.41905E-05	2.35476E-05	0	0.000141286	0	0.000188381	0	1.05983E-09	2.53143E-08	2.63742E-08	0.0263742
397466.283768677.2	397466.28	3768677	5.03384E-05	0	0.000100677	0.000100677	2.51692E-05	0	0.000151015	0	0.000201354	0	1.13282E-09	2.70576E-08	2.81904E-08	0.0281904
397566.283768677.2	397566.28	3768677	4.81398E-05	0	9.62795E-05	9.62795E-05	2.40699E-05	0	0.000144419	0	0.000192559	0	1.08334E-09	2.58758E-08	2.69591E-08	0.0269591
397666.283768677.2	397666.28	3768677	4.21965E-05	0	8.43929E-05	8.43929E-05	2.10982E-05	0	0.000126589	0	0.000168786	0	9.49592E-10	2.26812E-08	2.36308E-08	0.0236308
397766.283768677.2	397766.28	3768677	3.47475E-05	0	6.9495E-05	6.9495E-05	1.73738E-05	0	0.000104243	0	0.00013899	0	7.81961E-10	1.86773E-08	1.94592E-08	0.0194592
397866.283768677.2	397866.28	3768677	2.8144E-05	0	5.6288E-05	5.6288E-05	1.4072E-05	0	8.4432E-05	0	0.000112576	0	6.33355E-10	1.51278E-08	1.57611E-08	0.0157611
396166.283768777.2	396166.28	3768777	4.70222E-06	0	9.40443E-06	9.40443E-06	2.35111E-06	0	1.41066E-05	0	1.88089E-05	0	1.05819E-10	2.52751E-09	2.63333E-09	0.0026333
396266.283768777.2	396266.28	3768777	5.27172E-06	0	1.05434E-05	1.05434E-05	2.63586E-06	0	1.58152E-05	0	2.10869E-05	0	1.18635E-10	2.83362E-09	2.95226E-09	0.0029523
396366.283768777.2	396366.28	3768777	5.73791E-06	0	1.14758E-05	1.14758E-05	2.86896E-06	0	1.72137E-05	0	2.29517E-05	0	1.29126E-10	3.08421E-09	3.21333E-09	0.0032133
396466.283768777.2	396466.28	3768777	6.84291E-06	0	1.36858E-05	1.36858E-05	3.42145E-06	0	2.05287E-05	0	2.73716E-05	0	1.53993E-10	3.67816E-09	3.83215E-09	0.0038322
396566.283768777.2	396566.28	3768777	7.87861E-06	0	1.57572E-05	1.57572E-05	3.9393E-06	0	2.36358E-05	0	3.15144E-05	0	1.77301E-10	4.23486E-09	4.41216E-09	0.0044122
396666.283768777.2	396666.28	3768777	9.21544E-06	0	1.84309E-05	1.84309E-05	4.60772E-06	0	2.76463E-05	0	3.68617E-05	0	2.07385E-10	4.95342E-09	5.16081E-09	0.0051608
396766.283768777.2	396766.28	3768777	1.09504E-05	0	2.19008E-05	2.19008E-05	5.47521E-06	0	3.28513E-05	0	4.38017E-05	0	2.46429E-10	5.886E-09	6.13243E-09	0.0061324
396866.283768777.2	396866.28	3768777	1.31881E-05	0	2.63763E-05	2.63763E-05	6.59406E-06	0	3.95644E-05	0	5.27525E-05	0	2.96787E-10	7.0888E-09	7.38559E-09	0.0073856
396966.283768777.2	396966.28	3768777	1.60155E-05	0	3.2031E-05	3.2031E-05	8.00775E-06	0	4.80465E-05	0	6.4062E-05	0	3.60414E-10	8.60856E-09	8.96897E-09	0.008969
397066.283768777.2	397066.28	3768777	1.958E-05	0	3.91599E-05	3.91599E-05	9.78998E-06	0	5.87399E-05	0	7.83199E-05	0	4.40629E-10	1.05245E-08	1.09651E-08	0.0109651
397166.283768777.2	397166.28	3768777	2.38021E-05	0	4.76043E-05	4.76043E-05	1.19011E-05	0	7.14064E-05	0	9.52085E-05	0	5.35645E-10	1.2794E-08	1.33296E-08	0.0133296
397266.283768777.2	397266.28	3768777	2.89441E-05	0	5.78882E-05	5.78882E-05	1.4472E-05	0	8.68322E-05	0	0.000115776	0	6.5136E-10	1.55578E-08	1.62092E-08	0.0162092
397366.283768777.2	397366.28	3768777	3.34044E-05	0	6.68088E-05	6.68088E-05	1.67022E-05	0	0.000100213	0	0.000133618	0	7.51735E-10	1.79553E-08	1.87071E-08	0.0187071
397466.283768777.2	397466.28	3768777	3.57328E-05	0	7.14656E-05	7.14656E-05	1.78664E-05	0	0.000107198	0	0.000142931	0	8.04134E-10	1.92069E-08	2.0011E-08	0.020011
397566.283768777.2	397566.28	3768777	3.52414E-05	0	7.04828E-05	7.04828E-05	1.76207E-05	0	0.000105724	0	0.000140966	0	7.93076E-10	1.89428E-08	1.97358E-08	0.0197358
397666.283768777.2	397666.28	3768777	3.23145E-05	0	6.4629E-05	6.4629E-05	1.61573E-05	0	9.69435E-05	0	0.000129258	0	7.27208E-10	1.73695E-08	1.80967E-08	0.0180967
397766.283768777.2	397766.28	3768777	2.80608E-05	0	5.61217E-05	5.61217E-05	1.40304E-05	0	8.41825E-05	0	0.000112243	0	6.31483E-10	1.50831E-08	1.57146E-08	0.0157146
397866.283768777.2	397866.28	3768777	2.37807E-05	0	4.75614E-05	4.75614E-05	1.18904E-05	0	7.13421E-05	0	9.51229E-05	0	5.35163E-10	1.27825E-08	1.33176E-08	0.0133176
396166.283768877.2	396166.28	3768877	4.42124E-06	0	8.84249E-06	8.84249E-06	2.21062E-06	0	1.32637E-05	0	1.7685E-05	0	9.9496E-11	2.37648E-09	2.47597E-09	0.002476
396266.283768877.2	396266.28	3768877	4.95043E-06	0	9.90086E-06	9.90086E-06	2.47522E-06	0	1.48513E-05	0	1.98017E-05	0	1.11405E-10	2.66092E-09	2.77233E-09	0.0027723
396366.283768877.2	396366.28	3768877	5.53758E-06	0	1.10752E-05	1.10752E-05	2.76879E-06	0	1.66127E-05	0	2.21503E-05	0	1.24618E-10	2.97652E-09	3.10114E-09	0.0031011
396466.283768877.2	396466.28	3768877	6.30994E-06	0	1.26199E-05	1.26199E-05	3.15497E-06	0	1.89298E-05	0	2.52398E-05	0	1.41999E-10	3.39168E-09	3.53368E-09	0.0035337
396566.283768877.2	396566.28	3768877	7.1957E-06	0	1.43914E-05	1.43914E-05	3.59785E-06	0	2.15871E-05	0	2.87828E-05	0	1.61933E-10	3.86779E-09	4.02972E-09	0.0040297
396666.283768877.2	396666.28	3768877	8.27172E-06	0	1.65434E-05	1.65434E-05	4.13586E-06	0	2.48152E-05	0	3.30869E-05	0	1.86147E-10	4.44616E-09	4.63231E-09	0.0046323
396766.283768877.2	396766.28	3768877	9.67911E-06	0	1.93582E-05	1.93582E-05	4.83955E-06	0	2.90373E-05	0	3.87164E-05	0	2.17819E-10	5.20265E-09	5.42047E-09	0.0054205
396866.283768877.2	396866.28	3768877	1.15489E-05	0	2.30978E-05	2.30978E-05	5.77445E-06	0	3.46467E-05	0	4.61956E-05	0	2.59897E-10	6.2077E-09	6.46759E-09	0.0064676
396966.283768877.2	396966.28	3768877	1.36442E-05	0	2.72885E-05	2.72885E-05	6.82212E-06	0	4.09327E-05	0	5.4577E-05	0	3.07051E-10	7.33397E-09	7.64102E-09	0.007641
397066.283768877.2	397066.28	3768877	1.60105E-05	0	3.20209E-05	3.20209E-05	8.00523E-06	0	4.80314E-05	0	6.40419E-05	0	3.60301E-10	8.60585E-09	8.96615E-09	0.0089661
397166.283768877.2	397166.28	3768877	1.88479E-05	0	3.76958E-05	3.76958E-05	9.42396E-06	0	5.65438E-05	0	7.53917E-05	0	4.24155E-10	1.0131E-08	1.05552E-08	0.0105552
397266.283768877.2	397266.28	3768877	2.21087E-05	0	4.42175E-05	4.42175E-05	1.10544E-05	0	6.63262E-05	0	8.84349E-05	0	4.97537E-10	1.18837E-08	1.23813E-08	0.0123813
397366.283768877.2	397366.28	3768877	2.48555E-05	0	4.97109E-05	4.97109E-05	1.24277E-05	0	7.45664E-05	0	9.94219E-05	0	5.59349E-10	1.33602E-08	1.39195E-08	0.0139195
397466.283768877.2	397466.28	3768877	2.6627E-05	0	5.3254E-05	5.3254E-05	1.33135E-05	0	7.9881E-05	0	0.000106508	0	5.99216E-10	1.43124E-08	1.49116E-08	0.0149116
397566.283768877.2	397566.28	3768877	2.68009E-05	0	5.36017E-05	5.36017E-05	1.34004E-05	0	8.04026E-05	0	0.000107203	0	6.03129E-10	1.44058E-08	1.5009E-08	0.015009
397666.283768877.2	397666.28	3768877	2.51944E-05	0	5.03888E-05	5.03888E-05	1.25972E-05	0	7.55832E-05	0	0.000100778	0	5.66977E-10	1.35423E-08	1.41093E-08	0.0141093
397766.283768877.2	397766.28	3768877	2.27148E-05	0	4.54296E-05	4.54296E-05	1.13574E-05	0	6.81443E-05	0	9.08591E-05	0	5.11175E-10	1.22095E-08	1.27207E-08	0.0127207
397866.283768877.2	397866.28	3768877	2.00147E-05	0	4.00293E-05	4.00293E-05	1.00073E-05	0	6.0044E-05	0	8.00586E-05	0	4.50411E-10	1.07582E-08	1.12086E-08	0.0112086
3964253767739	396425	3767739	8.76185E-06	0	1.75237E-05	1.75237E-05	4.38092E-06	0	2.62855E-05	0	3.50474E-05	0	1.97177E-10	4.70961E-09	4.90679E-09	0.0049068
3964753767739	396475	3767739	9.60981E-06	0	1.92196E-05	1.92196E-05	4.8049E-06	0	2.88294E-05	0	3.84392E-05	0	2.1626E-10	5.1654E-09	5.38166E-09	0.0053817
3965253767739	396525	3767739	1.05019E-05	0	2.10037E-05	2.10037E-05	5.25093E-06	0	3.15056E-05	0	4.20075E-05	0	2.36335E-10	5.6449E-09	5.88123E-09	0.0058812
3965753767739	396575	3767739	1.16434E-05	0	2.32868E-05	2.32868E-05	5.8217E-06	0	3.49302E-05	0	4.65736E-05	0	2.62024E-10	6.25849E-09	6.52051E-09	0.0065205
3966253767739	396625	3767739	1.26804E-05	0	2.53607E-05	2.53607E-05	6.34018E-06	0	3.80411E-05	0	5.07214E-05	0	2.8536E-10	6.81587E-09	7.10123E-09	0.0071012
3966753767739	396675	3767739	1.41583E-05	0	2.83166E-05	2.83166E-05	7.07915E-06	0	4.24749E-05	0	5.66332E-05	0	3.1862E-10	7.61029E-09	7.92891E-09	0.0079289
3967253767739	396725	3767739	1.62851E-05	0	3.25703E-05	3.25703E-05	8.14257E-06	0	4.88554E-05	0	6.51406E-05	0	3.66482E-10	8.75349E-09	9.11997E-09	0.00912
3967753767739	396775	3767739	1.82885E-05	0	3.6577E-05	3.6577E-05	9.14425E-06	0	5.48655E-05	0	7.3154E-05	0	4.11566E-10	9.83032E-09	1.02419E-08	0.0102419
3968253767739	396825	3767739	2.11121E-05	0	4.22242E-05	4.22242E-05	1.0556E-05	0	6.33363E-05	0	8.44484E-05	0	4.75108E-10	1.1348E-08	1.18232E-08	0.0118232
3968753767739	396875	3767739	2.44132E-05	0	4.88264E-05	4.88264E-05	1.22066E-05	0	7.32397E-05	0	9.76529E-05	0	5.49397E-10	1.31224E-08	1.36718E-08	0.0136718
3969253767739	396925	3767739	2.79852E-05	0	5.59705E-05	5.59705E-05	1.39926E-05	0	8.39557E-05	0	0.000111941	0	6.29782E-10	1.50425E-08	1.56722E-08	0.0156722
3969753767739	396975	3767739	3.19642E-05	0	6.39285E-05	6.39285E-05	1.59821E-05	0	9.58927E-05	0	0.000127857	0	7.19325E-10	1.71812E-08	1.79005E-08	0.0179005
3970253767739	397025	3767739	3.61788E-05	0	7.23577E-05	7.23577E-05	1.80894E-05	0	0.000108537	0	0.000144715	0	8.14171E-10	1.94466E-08	2.02608E-08	0.0202608
3970753767739	397075	3767739	4.03141E-05	0	8.06281E-05	8.06281E-05	2.0157E-05	0	0.000120942	0	0.000161256	0	9.07231E-10	2.16694E-08	2.25766E-08	0.0225766
3971253767739	397125	3767739	4.41935E-05	0	8.83871E-05	8.83871E-05	2.20968E-05	0	0.000132581	0	0.000176774	0	9.94534E-10	2.37546E-08	2.47492E-08	0.0247492
3971753767739	397175	3767739	4.77416E-05	0	9.54832E-05	9.54832E-05	2.38708E-05	0	0.000143225	0	0.000190966	0	1.07438E-09	2.56618E-08	2.67362E-08	0.0267362
3972253767739	397225	3767739	5.03901E-05	0	0.00010078	0.00010078	2.5195E-05	0	0.00015117	0	0.00020156	0	1.13398E-09	2.70854E-08	2.82193E-08	0.0282193
3972753767739	397275	3767739	5.22359E-05	0	0.000104472	0.000104472	2.6118E-05	0	0.000156708	0	0.000208944	0	1.17552E-09	2.80775E-08	2.92531E-08	0.0292531
3973253767739	397325	3767739	5.1805E-05	0	0.00010361	0.00010361	2.59025E-05	0	0.000155415	0	0.00020722	0	1.16582E-09	2.78459E-08	2.90117E-08	0.0290117

Garvey Reservoir Rehab - Mitigated Standby Generator			Demolition - 2025	Demolition - 2026	ite Preparation - 202	te Preparation - 202	Grading - 2025	Grading - 2026	nfrastructure - 202	nfrastructure - 202	Paving - 2025	itectural Coating -	Child Risk			
Unique Identifier	X (UTM)	Y (UTM)	2025	1900	2025	2026	2026	1900	2026	1900	2026	1900	3rd Trimester	0<2	Total	per million
3973753767739	397375	3767739	4.9939E-05	0	9.9878E-05	9.9878E-05	2.49695E-05	0	0.000149817	0	0.000199756	0	1.12383E-09	2.68429E-08	2.79667E-08	0.0279667
3974253767739	397425	3767739	4.73321E-05	0	9.46642E-05	9.46642E-05	2.36661E-05	0	0.000141996	0	0.000189328	0	1.06517E-09	2.54417E-08	2.65068E-08	0.0265068
3974753767739	397475	3767739	4.44543E-05	0	8.89087E-05	8.89087E-05	2.22272E-05	0	0.000133363	0	0.000177817	0	1.0004E-09	2.38948E-08	2.48952E-08	0.0248952
3975253767739	397525	3767739	4.03128E-05	0	8.06256E-05	8.06256E-05	2.01564E-05	0	0.000120938	0	0.000161251	0	9.07202E-10	2.16687E-08	2.25759E-08	0.0225759
3964253767789	396425	3767789	8.93824E-06	0	1.78765E-05	1.78765E-05	4.46912E-06	0	2.68147E-05	0	3.5753E-05	0	2.01147E-10	4.80443E-09	5.00558E-09	0.0050056
3964753767789	396475	3767789	9.78494E-06	0	1.95699E-05	1.95699E-05	4.89247E-06	0	2.93548E-05	0	3.91398E-05	0	2.20201E-10	5.25954E-09	5.47974E-09	0.0054797
3965253767789	396525	3767789	1.07211E-05	0	2.14422E-05	2.14422E-05	5.36055E-06	0	3.21633E-05	0	4.28844E-05	0	2.41268E-10	5.76274E-09	6.00401E-09	0.006004
3965753767789	396575	3767789	1.17984E-05	0	2.35968E-05	2.35968E-05	5.89919E-06	0	3.53951E-05	0	4.71935E-05	0	2.65512E-10	6.34179E-09	6.6073E-09	0.0066073
3966253767789	396625	3767789	1.31642E-05	0	2.63284E-05	2.63284E-05	6.58209E-06	0	3.94926E-05	0	5.26568E-05	0	2.96248E-10	7.07593E-09	7.37218E-09	0.0073722
3966753767789	396675	3767789	1.48954E-05	0	2.97908E-05	2.97908E-05	7.4477E-06	0	4.46862E-05	0	5.95816E-05	0	3.35207E-10	8.00648E-09	8.34169E-09	0.0083417
3967253767789	396725	3767789	1.72163E-05	0	3.44325E-05	3.44325E-05	8.60813E-06	0	5.16488E-05	0	6.8865E-05	0	3.87436E-10	9.25398E-09	9.64141E-09	0.0096414
3967753767789	396775	3767789	1.97135E-05	0	3.94271E-05	3.94271E-05	9.85676E-06	0	5.91406E-05	0	7.88541E-05	0	4.43635E-10	1.05963E-08	1.10399E-08	0.0110399
3968253767789	396825	3767789	2.29441E-05	0	4.58882E-05	4.58882E-05	1.1472E-05	0	6.88323E-05	0	9.17764E-05	0	5.16336E-10	1.23328E-08	1.28491E-08	0.0128491
3968753767789	396875	3767789	2.67794E-05	0	5.35589E-05	5.35589E-05	1.33897E-05	0	8.03383E-05	0	0.000107118	0	6.02647E-10	1.43943E-08	1.4997E-08	0.014997
3969253767789	396925	3767789	3.13078E-05	0	6.26156E-05	6.26156E-05	1.56539E-05	0	9.39234E-05	0	0.000125231	0	7.04553E-10	1.68284E-08	1.75329E-08	0.0175329
3969753767789	396975	3767789	3.67219E-05	0	7.34438E-05	7.34438E-05	1.83609E-05	0	0.000110166	0	0.000146888	0	8.26392E-10	1.97385E-08	2.05649E-08	0.0205649
3970253767789	397025	3767789	4.28353E-05	0	8.56706E-05	8.56706E-05	2.14176E-05	0	0.000128506	0	0.000171341	0	9.63968E-10	2.30246E-08	2.39885E-08	0.0239885
3970753767789	397075	3767789	4.93834E-05	0	9.87667E-05	9.87667E-05	2.46917E-05	0	0.00014815	0	0.000197533	0	1.11133E-09	2.65442E-08	2.76556E-08	0.0276556
3971253767789	397125	3767789	5.59415E-05	0	0.000111883	0.000111883	2.79708E-05	0	0.000167825	0	0.000223766	0	1.25891E-09	3.00693E-08	3.13282E-08	0.0313282
3971753767789	397175	3767789	6.21431E-05	0	0.000124286	0.000124286	3.10715E-05	0	0.000186429	0	0.000248572	0	1.39847E-09	3.34028E-08	3.48012E-08	0.0348012
3972253767789	397225	3767789	6.71212E-05	0	0.000134242	0.000134242	3.35606E-05	0	0.000201364	0	0.000268485	0	1.5105E-09	3.60786E-08	3.75891E-08	0.0375891
3972753767789	397275	3767789	7.09642E-05	0	0.000141928	0.000141928	3.54821E-05	0	0.000212892	0	0.000283857	0	1.59698E-09	3.81442E-08	3.97412E-08	0.0397412
3973253767789	397325	3767789	7.12313E-05	0	0.000142463	0.000142463	3.56156E-05	0	0.000213694	0	0.000284925	0	1.60299E-09	3.82878E-08	3.98908E-08	0.0398908
3973753767789	397375	3767789	6.82527E-05	0	0.000136505	0.000136505	3.41263E-05	0	0.000204758	0	0.000273011	0	1.53596E-09	3.66868E-08	3.82227E-08	0.0382227
3974253767789	397425	3767789	6.34131E-05	0	0.000126826	0.000126826	3.17066E-05	0	0.000190239	0	0.000253653	0	1.42705E-09	3.40854E-08	3.55125E-08	0.0355125
3974753767789	397475	3767789	5.81313E-05	0	0.000116263	0.000116263	2.90657E-05	0	0.000174394	0	0.000232525	0	1.30819E-09	3.12464E-08	3.25546E-08	0.0325546
3975253767789	397525	3767789	5.12708E-05	0	0.000102542	0.000102542	2.56354E-05	0	0.000153812	0	0.000205083	0	1.1538E-09	2.75588E-08	2.87126E-08	0.0287126
3964253767839	396425	3767839	9.08692E-06	0	1.81738E-05	1.81738E-05	4.54346E-06	0	2.72608E-05	0	3.63477E-05	0	2.04493E-10	4.88434E-09	5.08884E-09	0.0050888
3964753767839	396475	3767839	9.99662E-06	0	1.99932E-05	1.99932E-05	4.99831E-06	0	2.99899E-05	0	3.99865E-05	0	2.24965E-10	5.37332E-09	5.59829E-09	0.0055983
3965253767839	396525	3767839	1.08962E-05	0	2.17925E-05	2.17925E-05	5.44812E-06	0	3.26887E-05	0	4.3585E-05	0	2.4521E-10	5.85688E-09	6.10209E-09	0.0061021
3965753767839	396575	3767839	1.21197E-05	0	2.42393E-05	2.42393E-05	6.05984E-06	0	3.6359E-05	0	4.84787E-05	0	2.72742E-10	6.51449E-09	6.78723E-09	0.0067872
3966253767839	396625	3767839	1.3609E-05	0	2.72179E-05	2.72179E-05	6.80448E-06	0	4.08269E-05	0	5.44358E-05	0	3.06257E-10	7.315E-09	7.62126E-09	0.0076213
3966753767839	396675	3767839	1.57686E-05	0	3.15371E-05	3.15371E-05	7.88428E-06	0	4.73057E-05	0	6.30742E-05	0	3.54857E-10	8.47581E-09	8.83067E-09	0.0088307
3967253767839	396725	3767839	1.81297E-05	0	3.62595E-05	3.62595E-05	9.06487E-06	0	5.43892E-05	0	7.2519E-05	0	4.07993E-10	9.74499E-09	1.0153E-08	0.010153
3967753767839	396775	3767839	2.09974E-05	0	4.19949E-05	4.19949E-05	1.04987E-05	0	6.29923E-05	0	8.39897E-05	0	4.72528E-10	1.12864E-08	1.17589E-08	0.0117589
3968253767839	396825	3767839	2.45984E-05	0	4.91969E-05	4.91969E-05	1.22992E-05	0	7.37953E-05	0	9.83938E-05	0	5.53565E-10	1.3222E-08	1.37756E-08	0.0137756
3968753767839	396875	3767839	2.91041E-05	0	5.82082E-05	5.82082E-05	1.4552E-05	0	8.73123E-05	0	0.000116416	0	6.54961E-10	1.56439E-08	1.62988E-08	0.0162988
3969253767839	396925	3767839	3.47072E-05	0	6.94144E-05	6.94144E-05	1.73536E-05	0	0.000104122	0	0.000138829	0	7.81053E-10	1.86556E-08	1.94366E-08	0.0194366
3969753767839	396975	3767839	4.17366E-05	0	8.34732E-05	8.34732E-05	2.08683E-05	0	0.00012521	0	0.000166946	0	9.39243E-10	2.2434E-08	2.33732E-08	0.0233732
3970253767839	397025	3767839	5.02666E-05	0	0.000100533	0.000100533	2.51333E-05	0	0.0001508	0	0.000201066	0	1.1312E-09	2.7019E-08	2.81502E-08	0.0281502
3970753767839	397075	3767839	6.02998E-05	0	0.0001206	0.0001206	3.01499E-05	0	0.000180899	0	0.000241199	0	1.35699E-09	3.24119E-08	3.37689E-08	0.0337689
3971253767839	397125	3767839	7.10864E-05	0	0.000142173	0.000142173	3.55432E-05	0	0.000213259	0	0.000284345	0	1.59973E-09	3.82099E-08	3.98096E-08	0.0398096
3971753767839	397175	3767839	8.323E-05	0	0.00016646	0.00016646	4.1615E-05	0	0.00024969	0	0.00033292	0	1.87301E-09	4.47373E-08	4.66103E-08	0.0466103
3972253767839	397225	3767839	9.45156E-05	0	0.000189031	0.000189031	4.72578E-05	0	0.000283547	0	0.000378062	0	2.12698E-09	5.08034E-08	5.29304E-08	0.0529304
3972753767839	397275	3767839	0.000101671	0	0.000203342	0.000203342	5.08355E-05	0	0.000305013	0	0.000406684	0	2.28801E-09	5.46495E-08	5.69375E-08	0.0569375
3973253767839	397325	3767839	0.000102073	0	0.000204146	0.000204146	5.10364E-05	0	0.000306219	0	0.000408291	0	2.29706E-09	5.48656E-08	5.71626E-08	0.0571626
3973753767839	397375	3767839	9.8928E-05	0	0.000197856	0.000197856	4.9464E-05	0	0.000296784	0	0.000395712	0	2.22628E-09	5.31752E-08	5.54014E-08	0.0554014
3974753767839	397475	3767839	7.82846E-05	0	0.000156569	0.000156569	3.91423E-05	0	0.000234854	0	0.000313138	0	1.76172E-09	4.2079E-08	4.38408E-08	0.0438408
3975253767839	397525	3767839	6.56685E-05	0	0.000131337	0.000131337	3.28342E-05	0	0.000197005	0	0.000262674	0	1.47781E-09	3.52977E-08	3.67755E-08	0.0367755
3964253767889	396425	3767889	9.19654E-06	0	1.83931E-05	1.83931E-05	4.59827E-06	0	2.75896E-05	0	3.67861E-05	0	2.0696E-10	4.94327E-09	5.15023E-09	0.0051502
3964753767889	396475	3767889	1.0008E-05	0	2.00159E-05	2.00159E-05	5.00398E-06	0	3.00239E-05	0	4.00318E-05	0	2.2522E-10	5.37942E-09	5.60464E-09	0.0056046
3965253767889	396525	3767889	1.1089E-05	0	2.2178E-05	2.2178E-05	5.54451E-06	0	3.3267E-05	0	4.43561E-05	0	2.49548E-10	5.9605E-09	6.21005E-09	0.00621
3965753767889	396575	3767889	1.24712E-05	0	2.49424E-05	2.49424E-05	6.2356E-06	0	3.74136E-05	0	4.98848E-05	0	2.80653E-10	6.70344E-09	6.9841E-09	0.0069841
3974753767889	397475	3767889	0.000111256	0	0.000222511	0.000222511	5.56278E-05	0	0.000333767	0	0.000445022	0	2.5037E-09	5.98014E-08	6.23051E-08	0.0623051
3975253767889	397525	3767889	8.46878E-05	0	0.000169376	0.000169376	4.23439E-05	0	0.000254063	0	0.000338751	0	1.90582E-09	4.55208E-08	4.74267E-08	0.0474267
3964253767939	396425	3767939	9.27214E-06	0	1.85443E-05	1.85443E-05	4.63607E-06	0	2.78164E-05	0	3.70885E-05	0	2.08661E-10	4.9839E-09	5.19256E-09	0.0051926
3964753767939	396475	3767939	1.01113E-05	0	2.02226E-05	2.02226E-05	5.05564E-06	0	3.03338E-05	0	4.04451E-05	0	2.27545E-10	5.43495E-09	5.6625E-09	0.0056625
3965253767939	396525	3767939	1.12629E-05	0	2.25258E-05	2.25258E-05	5.63145E-06	0	3.37887E-05	0	4.50516E-05	0	2.53461E-10	6.05396E-09	6.30742E-09	0.0063074
3974753767939	397475	3767939	0.000151009	0	0.000302018	0.000302018	7.55045E-05	0	0.000453027	0	0.000604036	0	3.39832E-09	8.11694E-08	8.45677E-08	0.0845677
3975253767939	397525	3767939	0.000106482	0	0.000212963	0.000212963	5.32408E-05	0	0.000319445	0	0.000425926	0	2.39627E-09	5.72353E-08	5.96315E-08	0.0596315
3964253767989	396425	3767989	9.23938E-06	0	1.84788E-05	1.84788E-05	4.61969E-06	0	2.77181E-05	0	3.69575E-05	0	2.07924E-10	4.96629E-09	5.17422E-09	0.0051742
3964753767989	396475	3767989	1.01907E-05	0	2.03813E-05	2.03813E-05	5.09533E-06	0	3.0572E-05	0	4.07626E-05	0	2.29331E-10	5.47762E-09	5.70695E-09	0.0057069
3974753767989	397475	3767989	0.000205445	0	0.00041089	0.00041089	0.000102722	0	0.000616334	0	0.000821779	0	4.62334E-09	1.10429E-07	1.15053E-07	0.1150527
3975253767989	397525	3767989	0.000136277	0	0.000272555	0.000272555	6.81387E-05	0	0.000408832	0	0.000545109	0	3.06679E-09	7.32509E-08	7.63177E-08	0.0763177
3964253768039	396425	3768039	9.25072E-06	0	1.85014E-05	1.85014E-05	4.62536E-06	0	2.77521E-05	0	3.70029E-05	0	2.08179E-10	4.97239E-09	5.18057E-09	0.0051806
3964753768039	396475	3768039	1.02436E-05	0	2.04871E-05	2.04871E-05	5.12179E-06	0	3.07307E-05	0	4.09743E-05	0	2.30522E-10	5.50606E-09	5.73658E-09	0.0057366
3974753768039	397475	3768039	0.000339813	0	0.000679626	0.000679626	0.000169907	0	0.00101944	0	0.001359253	0	7.64718E-09	1.82654E-07	1.90301E-07	0.1903015
3975253768039	397525	3768039	0.000210283	0	0.000420566	0.000420566	0.000105142	0	0.000630849	0	0.000841132	0	4.73223E-09	1.1303E-07	1.17762E-07	0.1177623
3964253768089	396425	3768089	9.24694E-06	0	1.84939E-05	1.84939E-05	4.62347E-06	0	2.77408E-05	0	3.69877E-05	0	2.08094E-10	4.97036E-09	5.17845E-09	0.0051784

Garvey Reservoir Rehab - Mitigated Standby Generator			Demolition - 2025	Demolition - 2026	ite Preparation - 202	te Preparation - 202	Grading - 2025	Grading - 2026	nfrastructure - 202	nfrastructure - 202	Paving - 2025	itectural Coating -	Child Risk			
Unique Identifier	X (UTM)	Y (UTM)	2025	1900	2025	2026	2026	1900	2026	1900	2026	1900	3rd Trimester	0<2	Total	per million
3964753768089	396475	3768089	1.02574E-05	0	2.05149E-05	2.05149E-05	5.12872E-06	0	3.07723E-05	0	4.10297E-05	0	2.30834E-10	5.51351E-09	5.74435E-09	0.0057443
3974753768089	397475	3768089	0.000496128	0	0.000992256	0.000992256	0.000248064	0	0.001488384	0	0.001984512	0	1.11649E-08	2.66676E-07	2.7784E-07	0.2778405
3975253768089	397525	3768089	0.000269717	0	0.000539434	0.000539434	0.000134859	0	0.000809152	0	0.001078869	0	6.06974E-09	1.44977E-07	1.51046E-07	0.1510465
3964253768139	396425	3768139	9.27214E-06	0	1.85443E-05	1.85443E-05	4.63607E-06	0	2.78164E-05	0	3.70885E-05	0	2.08661E-10	4.9839E-09	5.19256E-09	0.0051926
3964753768139	396475	3768139	1.01919E-05	0	2.03838E-05	2.03838E-05	5.09596E-06	0	3.05757E-05	0	4.07677E-05	0	2.2936E-10	5.4783E-09	5.70765E-09	0.0057077
3974253768139	397425	3768139	0.001621069	0	0.003242138	0.003242138	0.000810534	0	0.004863207	0	0.006484276	0	3.64807E-08	8.71347E-07	9.07828E-07	0.9078276
3974753768139	397475	3768139	0.000627862	0	0.001255724	0.001255724	0.000313931	0	0.001883585	0	0.002511447	0	1.41294E-08	3.37484E-07	3.51614E-07	0.3516138
3975253768139	397525	3768139	0.000314539	0	0.000629079	0.000629079	0.00015727	0	0.000943618	0	0.001258158	0	7.07842E-09	1.69069E-07	1.76148E-07	0.1761477
3964253768189	396425	3768189	9.17008E-06	0	1.83402E-05	1.83402E-05	4.58504E-06	0	2.75102E-05	0	3.66803E-05	0	2.06364E-10	4.92904E-09	5.13541E-09	0.0051354
3964753768189	396475	3768189	1.00836E-05	0	2.01671E-05	2.01671E-05	5.04178E-06	0	3.02507E-05	0	4.03342E-05	0	2.26921E-10	5.42005E-09	5.64697E-09	0.005647
3973753768189	397375	3768189	0.002010588	0	0.004021176	0.004021176	0.001005294	0	0.006031764	0	0.008042352	0	4.52464E-08	1.08072E-06	1.12597E-06	1.1259652
3974253768189	397425	3768189	0.001065482	0	0.002130963	0.002130963	0.000532741	0	0.003196445	0	0.004261927	0	2.39777E-08	5.72711E-07	5.96689E-07	0.5966888
3974753768189	397475	3768189	0.000586701	0	0.001173402	0.001173402	0.000293351	0	0.001760103	0	0.002346804	0	1.32032E-08	3.1536E-07	3.28563E-07	0.3285631
3975253768189	397525	3768189	0.00032648	0	0.00065296	0.00065296	0.00016324	0	0.000979441	0	0.001305921	0	7.34713E-09	1.75488E-07	1.82835E-07	0.1828348
3964253768239	396425	3768239	9.034E-06	0	1.8068E-05	1.8068E-05	4.517E-06	0	2.7102E-05	0	3.6136E-05	0	2.03302E-10	4.8559E-09	5.0592E-09	0.0050592
3964753768239	396475	3768239	9.93236E-06	0	1.98647E-05	1.98647E-05	4.96618E-06	0	2.97971E-05	0	3.97294E-05	0	2.23519E-10	5.33878E-09	5.5623E-09	0.0055623
3973753768239	397375	3768239	0.000894908	0	0.001789816	0.001789816	0.000447454	0	0.002684724	0	0.003579631	0	2.01391E-08	4.81025E-07	5.01164E-07	0.5011644
3974253768239	397425	3768239	0.000618796	0	0.001237593	0.001237593	0.000309398	0	0.001856389	0	0.002475185	0	1.39254E-08	3.32612E-07	3.46537E-07	0.346537
3974753768239	397475	3768239	0.000414302	0	0.000828603	0.000828603	0.000207151	0	0.001242905	0	0.001657206	0	9.32347E-09	2.22693E-07	2.32016E-07	0.2320163
3975253768239	397525	3768239	0.000274945	0	0.00054989	0.00054989	0.000137472	0	0.000824835	0	0.001099779	0	6.18738E-09	1.47787E-07	1.53974E-07	0.153974
3964253768289	396425	3768289	8.8576E-06	0	1.77152E-05	1.77152E-05	4.4288E-06	0	2.65728E-05	0	3.54304E-05	0	1.99332E-10	4.76108E-09	4.96042E-09	0.0049604
3964753768289	396475	3768289	9.74463E-06	0	1.94893E-05	1.94893E-05	4.87231E-06	0	2.92339E-05	0	3.89785E-05	0	2.19294E-10	5.23787E-09	5.45716E-09	0.0054572
3973253768289	397325	3768289	0.000431272	0	0.000862544	0.000862544	0.000215636	0	0.001293816	0	0.001725088	0	9.70538E-09	2.31815E-07	2.4152E-07	0.2415201
3973753768289	397375	3768289	0.000485999	0	0.000971998	0.000971998	0.000243	0	0.001457997	0	0.001943996	0	1.0937E-08	2.61231E-07	2.72168E-07	0.2721681
3974253768289	397425	3768289	0.000445638	0	0.000891277	0.000891277	0.000222819	0	0.001336915	0	0.001782553	0	1.00287E-08	2.39537E-07	2.49565E-07	0.2495654
3974753768289	397475	3768289	0.0003483	0	0.000696601	0.000696601	0.00017415	0	0.001044901	0	0.001393202	0	7.83818E-09	1.87216E-07	1.95054E-07	0.1950545
3975253768289	397525	3768289	0.000250402	0	0.000500804	0.000500804	0.000125201	0	0.000751206	0	0.001001607	0	5.63506E-09	1.34594E-07	1.4023E-07	0.1402295
3964253768339	396425	3768339	8.68247E-06	0	1.73649E-05	1.73649E-05	4.34123E-06	0	2.60474E-05	0	3.47299E-05	0	1.95391E-10	4.66695E-09	4.86234E-09	0.0048623
3964753768339	396475	3768339	9.52665E-06	0	1.90533E-05	1.90533E-05	4.76332E-06	0	2.85799E-05	0	3.81066E-05	0	2.14388E-10	5.12071E-09	5.33509E-09	0.0053351
3965253768339	396525	3768339	1.05649E-05	0	2.11297E-05	2.11297E-05	5.28243E-06	0	3.16946E-05	0	4.22595E-05	0	2.37753E-10	5.67876E-09	5.91651E-09	0.0059165
3972753768339	397275	3768339	0.000213612	0	0.000427224	0.000427224	0.000106806	0	0.000640836	0	0.000854448	0	4.80714E-09	1.14819E-07	1.19626E-07	0.1196265
3973253768339	397325	3768339	0.000269608	0	0.000539215	0.000539215	0.000134804	0	0.000808823	0	0.00107843	0	6.06727E-09	1.44918E-07	1.50985E-07	0.1509851
3973753768339	397375	3768339	0.00030132	0	0.00060264	0.00060264	0.00015066	0	0.00090396	0	0.001205279	0	6.78092E-09	1.61964E-07	1.68744E-07	0.1687445
3974253768339	397425	3768339	0.000293805	0	0.000587611	0.000587611	0.000146903	0	0.000881416	0	0.001175221	0	6.61182E-09	1.57924E-07	1.64536E-07	0.1645363
3974753768339	397475	3768339	0.000254474	0	0.000508948	0.000508948	0.000127237	0	0.000763422	0	0.001017896	0	5.7267E-09	1.36783E-07	1.4251E-07	0.14251
3975253768339	397525	3768339	0.000204332	0	0.000408664	0.000408664	0.000102166	0	0.000612997	0	0.000817329	0	4.59831E-09	1.09831E-07	1.1443E-07	0.1144297
3964253768389	396425	3768389	8.46575E-06	0	1.69315E-05	1.69315E-05	4.23288E-06	0	2.53973E-05	0	3.3863E-05	0	1.90514E-10	4.55046E-09	4.74097E-09	0.004741
3964753768389	396475	3768389	9.27466E-06	0	1.85493E-05	1.85493E-05	4.63733E-06	0	2.7824E-05	0	3.70986E-05	0	2.08718E-10	4.98526E-09	5.19397E-09	0.005194
3965253768389	396525	3768389	1.02474E-05	0	2.04947E-05	2.04947E-05	5.12368E-06	0	3.07421E-05	0	4.09894E-05	0	2.30607E-10	5.50809E-09	5.7387E-09	0.0057387
3972253768389	397225	3768389	0.000119757	0	0.000239513	0.000239513	5.98783E-05	0	0.00035927	0	0.000479026	0	2.69501E-09	6.43708E-08	6.70658E-08	0.0670658
3972753768389	397275	3768389	0.000151992	0	0.000303983	0.000303983	7.59959E-05	0	0.000455975	0	0.000607967	0	3.42043E-09	8.16976E-08	8.51181E-08	0.0851181
3973253768389	397325	3768389	0.000183611	0	0.000367221	0.000367221	9.18054E-05	0	0.000550832	0	0.000734443	0	4.13199E-09	9.86933E-08	1.02825E-07	0.1028253
3973753768389	397375	3768389	0.00020363	0	0.000407261	0.000407261	0.000101815	0	0.000610891	0	0.000814522	0	4.58251E-09	1.09454E-07	1.14037E-07	0.1140367
3974253768389	397425	3768389	0.000204143	0	0.000408286	0.000408286	0.000102072	0	0.00061243	0	0.000816573	0	4.59405E-09	1.0973E-07	1.14324E-07	0.1143238
3974753768389	397475	3768389	0.000187154	0	0.000374308	0.000374308	9.35769E-05	0	0.000561461	0	0.000748615	0	4.21172E-09	1.00598E-07	1.04809E-07	0.1048094
3975253768389	397525	3768389	0.000160209	0	0.000320418	0.000320418	8.01046E-05	0	0.000480628	0	0.000640837	0	3.60536E-09	8.61147E-08	8.972E-08	0.08972
3964253768439	396425	3768439	8.2503E-06	0	1.65006E-05	1.65006E-05	4.12515E-06	0	2.47509E-05	0	3.30012E-05	0	1.85665E-10	4.43465E-09	4.62031E-09	0.0046203
3964753768439	396475	3768439	9.0025E-06	0	1.8005E-05	1.8005E-05	4.50125E-06	0	2.70075E-05	0	3.601E-05	0	2.02593E-10	4.83897E-09	5.04156E-09	0.0050416
3965253768439	396525	3768439	9.90338E-06	0	1.98068E-05	1.98068E-05	4.95169E-06	0	2.97101E-05	0	3.96135E-05	0	2.22866E-10	5.3232E-09	5.54607E-09	0.0055461
3971753768439	397175	3768439	7.34778E-05	0	0.000146956	0.000146956	3.67389E-05	0	0.000220433	0	0.000293911	0	1.65355E-09	3.94953E-08	4.11489E-08	0.0411489
3972253768439	397225	3768439	9.28436E-05	0	0.000185687	0.000185687	4.64218E-05	0	0.000278531	0	0.000371374	0	2.08936E-09	4.99047E-08	5.19941E-08	0.0519941
3972753768439	397275	3768439	0.000113183	0	0.000226367	0.000226367	5.65917E-05	0	0.00033955	0	0.000452733	0	2.54709E-09	6.08376E-08	6.33847E-08	0.0633847
3973253768439	397325	3768439	0.000132384	0	0.000264768	0.000264768	6.6192E-05	0	0.000397152	0	0.000529536	0	2.97918E-09	7.11582E-08	7.41374E-08	0.0741374
3973753768439	397375	3768439	0.000146342	0	0.000292684	0.000292684	7.3171E-05	0	0.000439026	0	0.000585368	0	3.29329E-09	7.86608E-08	8.19541E-08	0.0819541
3974253768439	397425	3768439	0.000149967	0	0.000299934	0.000299934	7.49835E-05	0	0.000449901	0	0.000599868	0	3.37487E-09	8.06093E-08	8.39842E-08	0.0839842
3974753768439	397475	3768439	0.000141906	0	0.000283811	0.000283811	7.09528E-05	0	0.000425717	0	0.000567623	0	3.19345E-09	7.62762E-08	7.94697E-08	0.0794697
3975253768439	397525	3768439	0.000126947	0	0.000253894	0.000253894	6.34736E-05	0	0.000380842	0	0.000507789	0	2.85683E-09	6.82359E-08	7.10927E-08	0.0710927
3964253768489	396425	3768489	7.99704E-06	0	1.59941E-05	1.59941E-05	3.99852E-06	0	2.39911E-05	0	3.19882E-05	0	1.79966E-10	4.29852E-09	4.47849E-09	0.0044785
3964753768489	396475	3768489	8.70389E-06	0	1.74078E-05	1.74078E-05	4.35194E-06	0	2.61117E-05	0	3.48156E-05	0	1.95873E-10	4.67846E-09	4.87433E-09	0.0048743
3965253768489	396525	3768489	9.54429E-06	0	1.90886E-05	1.90886E-05	4.77214E-06	0	2.86329E-05	0	3.81772E-05	0	2.14785E-10	5.13019E-09	5.34497E-09	0.005345
3970753768489	397075	3768489	4.08281E-05	0	8.16563E-05	8.16563E-05	2.04141E-05	0	0.000122484	0	0.000163313	0	9.18799E-10	2.19457E-08	2.28645E-08	0.0228645
3971253768489	397125	3768489	4.90986E-05	0	9.81972E-05	9.81972E-05	2.45493E-05	0	0.000147296	0	0.000196394	0	1.10492E-09	2.63912E-08	2.74961E-08	0.0274961
3971753768489	397175	3768489	5.98688E-05	0	0.000119738	0.000119738	2.99344E-05	0	0.000179607	0	0.000239475	0	1.34729E-09	3.21803E-08	3.35276E-08	0.0335276
3972253768489	397225	3768489	7.32056E-05	0	0.000146411	0.000146411	3.66028E-05	0	0.000219617	0	0.000292823	0	1.64743E-09	3.9349E-08	4.09965E-08	0.0409965
3972753768489	397275	3768489	8.73123E-05	0	0.000174625	0.000174625	4.36561E-05	0	0.000261937	0	0.000349249	0	1.96488E-09	4.69316E-08	4.88964E-08	0.0488964
3973253768489	397325	3768489	9.99095E-05	0	0.000199819	0.000199819	4.99547E-05	0	0.000299728	0	0.000399638	0	2.24837E-09	5.37027E-08	5.59511E-08	0.0559511
3973753768489	397375	3768489	0.000109484	0	0.000218968	0.000218968	5.4742E-05	0	0.000328452	0	0.000437936	0	2.46384E-09	5.88492E-08	6.1313E-08	0.061313
3974253768489	397425	3768489	0.000113166	0	0.000226331	0.000226331	5.65828E-05	0	0.000339497	0	0.000452663	0	2.54669E-09	6.08281E-08	6.33748E-08	0.0633748
3974753768489	397475	3768489	0.000107884	0	0.000215768	0.000215768	5.39419E-05	0	0.000323652	0	0.000431535	0	2.42783E-09	5.79891E-08	6.04169E-08	0.0604169

Garvey Reservoir Rehab - Mitigated Standby Generator			Demolition - 2025	Demolition - 2026	ite Preparation - 202	te Preparation - 202	Grading - 2025	Grading - 2026	nfrastructure - 202	nfrastructure - 202	Paving - 2025	itectural Coating -	Child Risk			
Unique Identifier	X (UTM)	Y (UTM)	2025	1900	2025	2026	2026	1900	2026	1900	2026	1900	3rd Trimester	0<2	Total	per million
3975253768489	397525	3768489	0.000101961	0	0.000203921	0.000203921	5.09804E-05	0	0.000305882	0	0.000407843	0	2.29453E-09	5.48053E-08	5.70998E-08	0.0570998
3964253768539	396425	3768539	7.73497E-06	0	1.54699E-05	1.54699E-05	3.86748E-06	0	2.32049E-05	0	3.09399E-05	0	1.74068E-10	4.15765E-09	4.33172E-09	0.0043317
3964753768539	396475	3768539	8.39897E-06	0	1.67979E-05	1.67979E-05	4.19949E-06	0	2.51969E-05	0	3.35959E-05	0	1.89011E-10	4.51456E-09	4.70358E-09	0.0047036
3965253768539	396525	3768539	9.17008E-06	0	1.83402E-05	1.83402E-05	4.58504E-06	0	2.75102E-05	0	3.66803E-05	0	2.06364E-10	4.92904E-09	5.13541E-09	0.0051354
3965753768539	396575	3768539	1.00294E-05	0	2.00588E-05	2.00588E-05	5.01469E-06	0	3.00881E-05	0	4.01175E-05	0	2.25702E-10	5.39093E-09	5.61663E-09	0.0056166
3970253768539	397025	3768539	3.03364E-05	0	6.06727E-05	6.06727E-05	1.51682E-05	0	9.10091E-05	0	0.000121345	0	6.82691E-10	1.63062E-08	1.69889E-08	0.0169889
3970753768539	397075	3768539	3.56207E-05	0	7.12413E-05	7.12413E-05	1.78103E-05	0	0.000106862	0	0.000142483	0	8.0161E-10	1.91466E-08	1.99482E-08	0.0199482
3971253768539	397125	3768539	4.19709E-05	0	8.39419E-05	8.39419E-05	2.09855E-05	0	0.000125913	0	0.000167884	0	9.44517E-10	2.256E-08	2.35045E-08	0.0235045
3971753768539	397175	3768539	4.99314E-05	0	9.98629E-05	9.98629E-05	2.49657E-05	0	0.000149794	0	0.000199726	0	1.12366E-09	2.68388E-08	2.79625E-08	0.0279625
3972253768539	397225	3768539	5.90574E-05	0	0.000118115	0.000118115	2.95287E-05	0	0.000177172	0	0.00023623	0	1.32903E-09	3.17442E-08	3.30732E-08	0.0330732
3972753768539	397275	3768539	6.92808E-05	0	0.000138562	0.000138562	3.46404E-05	0	0.000207842	0	0.000277123	0	1.5591E-09	3.72394E-08	3.87985E-08	0.0387985
3973253768539	397325	3768539	7.7923E-05	0	0.000155846	0.000155846	3.89615E-05	0	0.000233769	0	0.000311692	0	1.75358E-09	4.18847E-08	4.36383E-08	0.0436383
3973753768539	397375	3768539	8.4553E-05	0	0.000169106	0.000169106	4.22765E-05	0	0.000253659	0	0.000338212	0	1.90279E-09	4.54484E-08	4.73512E-08	0.0473512
3974253768539	397425	3768539	8.78339E-05	0	0.000175668	0.000175668	4.3917E-05	0	0.000263502	0	0.000351336	0	1.97662E-09	4.72119E-08	4.91886E-08	0.0491886
3974753768539	397475	3768539	8.50897E-05	0	0.000170179	0.000170179	4.25449E-05	0	0.000255269	0	0.000340359	0	1.91486E-09	4.57369E-08	4.76518E-08	0.0476518
3975253768539	397525	3768539	8.05488E-05	0	0.000161098	0.000161098	4.02744E-05	0	0.000241646	0	0.000322195	0	1.81268E-09	4.32961E-08	4.51087E-08	0.0451087
3964253768589	396425	3768589	7.45274E-06	0	1.49055E-05	1.49055E-05	3.72637E-06	0	2.23582E-05	0	2.98109E-05	0	1.67717E-10	4.00595E-09	4.17367E-09	0.0041737
3964753768589	396475	3768589	8.08398E-06	0	1.6168E-05	1.6168E-05	4.04199E-06	0	2.42519E-05	0	3.23359E-05	0	1.81923E-10	4.34525E-09	4.52717E-09	0.0045272
3965253768589	396525	3768589	8.79965E-06	0	1.75993E-05	1.75993E-05	4.39982E-06	0	2.63989E-05	0	3.51986E-05	0	1.98028E-10	4.72993E-09	4.92796E-09	0.004928
3965753768589	396575	3768589	9.51027E-06	0	1.90205E-05	1.90205E-05	4.75514E-06	0	2.85308E-05	0	3.80411E-05	0	2.1402E-10	5.1119E-09	5.32592E-09	0.0053259
3966253768589	396625	3768589	1.03935E-05	0	2.0787E-05	2.0787E-05	5.19676E-06	0	3.11805E-05	0	4.1574E-05	0	2.33896E-10	5.58666E-09	5.82055E-09	0.0058206
3968253768589	396825	3768589	1.61478E-05	0	3.22956E-05	3.22956E-05	8.0739E-06	0	4.84434E-05	0	6.45912E-05	0	3.63391E-10	8.67967E-09	9.04306E-09	0.0090431
3968753768589	396875	3768589	1.82494E-05	0	3.64989E-05	3.64989E-05	9.12472E-06	0	5.47483E-05	0	7.29978E-05	0	4.10687E-10	9.80932E-09	1.022E-08	0.01022
3969253768589	396925	3768589	2.06383E-05	0	4.12767E-05	4.12767E-05	1.03192E-05	0	6.1915E-05	0	8.25534E-05	0	4.64447E-10	1.10934E-08	1.15578E-08	0.0115578
3969753768589	396975	3768589	2.36988E-05	0	4.73976E-05	4.73976E-05	1.18494E-05	0	7.10965E-05	0	9.47953E-05	0	5.3332E-10	1.27384E-08	1.32718E-08	0.0132718
3970253768589	397025	3768589	2.72645E-05	0	5.45291E-05	5.45291E-05	1.36323E-05	0	8.17936E-05	0	0.000109058	0	6.13563E-10	1.46551E-08	1.52686E-08	0.0152686
3970753768589	397075	3768589	3.1299E-05	0	6.25979E-05	6.25979E-05	1.56495E-05	0	9.38969E-05	0	0.000125196	0	7.04354E-10	1.68236E-08	1.7528E-08	0.017528
3971253768589	397125	3768589	3.64384E-05	0	7.28768E-05	7.28768E-05	1.82192E-05	0	0.000109315	0	0.000145754	0	8.20012E-10	1.95861E-08	2.04062E-08	0.0204062
3971753768589	397175	3768589	4.23124E-05	0	8.46248E-05	8.46248E-05	2.11562E-05	0	0.000126937	0	0.00016925	0	9.52201E-10	2.27435E-08	2.36957E-08	0.0236957
3972253768589	397225	3768589	4.87609E-05	0	9.75219E-05	9.75219E-05	2.43805E-05	0	0.000146283	0	0.000195044	0	1.09732E-09	2.62097E-08	2.7307E-08	0.027307
3972753768589	397275	3768589	5.56278E-05	0	0.000111256	0.000111256	2.78139E-05	0	0.000166883	0	0.000222511	0	1.25185E-09	2.99007E-08	3.11525E-08	0.0311525
3973253768589	397325	3768589	6.25601E-05	0	0.00012512	0.00012512	3.12801E-05	0	0.00018768	0	0.000250241	0	1.40786E-09	3.36269E-08	3.50348E-08	0.0350348
3973753768589	397375	3768589	6.75194E-05	0	0.000135039	0.000135039	3.37597E-05	0	0.000202558	0	0.000270078	0	1.51946E-09	3.62926E-08	3.78121E-08	0.0378121
3974253768589	397425	3768589	6.88272E-05	0	0.000137654	0.000137654	3.44136E-05	0	0.000206482	0	0.000275309	0	1.54889E-09	3.69956E-08	3.85445E-08	0.0385445
3974753768589	397475	3768589	6.82363E-05	0	0.000136473	0.000136473	3.41182E-05	0	0.000204709	0	0.000272945	0	1.53559E-09	3.6678E-08	3.82136E-08	0.0382136
3975253768589	397525	3768589	6.58209E-05	0	0.000131642	0.000131642	3.29105E-05	0	0.000197463	0	0.000263284	0	1.48124E-09	3.53797E-08	3.68609E-08	0.0368609
3964253768639	396425	3768639	7.10246E-06	0	1.42049E-05	1.42049E-05	3.55123E-06	0	2.13074E-05	0	2.84099E-05	0	1.59834E-10	3.81767E-09	3.97751E-09	0.0039775
3964753768639	396475	3768639	7.76395E-06	0	1.55279E-05	1.55279E-05	3.88197E-06	0	2.32918E-05	0	3.10558E-05	0	1.7472E-10	4.17323E-09	4.34795E-09	0.004348
3965253768639	396525	3768639	8.3322E-06	0	1.66644E-05	1.66644E-05	4.1661E-06	0	2.49966E-05	0	3.33288E-05	0	1.87508E-10	4.47867E-09	4.66618E-09	0.0046662
3965753768639	396575	3768639	9.07306E-06	0	1.81461E-05	1.81461E-05	4.53653E-06	0	2.72192E-05	0	3.62922E-05	0	2.04181E-10	4.87689E-09	5.08108E-09	0.0050811
3966253768639	396625	3768639	9.97142E-06	0	1.99428E-05	1.99428E-05	4.98571E-06	0	2.99143E-05	0	3.98857E-05	0	2.24398E-10	5.35978E-09	5.58417E-09	0.0055842
3966753768639	396675	3768639	1.09907E-05	0	2.19815E-05	2.19815E-05	5.49537E-06	0	3.29722E-05	0	4.3963E-05	0	2.47336E-10	5.90767E-09	6.15501E-09	0.006155
3967253768639	396725	3768639	1.21285E-05	0	2.4257E-05	2.4257E-05	6.06425E-06	0	3.63855E-05	0	4.8514E-05	0	2.7294E-10	6.51923E-09	6.79217E-09	0.0067922
3967753768639	396775	3768639	1.34477E-05	0	2.68954E-05	2.68954E-05	6.72384E-06	0	4.03431E-05	0	5.37907E-05	0	3.02628E-10	7.22832E-09	7.53094E-09	0.0075309
3968253768639	396825	3768639	1.49987E-05	0	2.99974E-05	2.99974E-05	7.49935E-06	0	4.49961E-05	0	5.99948E-05	0	3.37532E-10	8.06201E-09	8.39955E-09	0.0083995
3968753768639	396875	3768639	1.67929E-05	0	3.35858E-05	3.35858E-05	8.39645E-06	0	5.03787E-05	0	6.71716E-05	0	3.77909E-10	9.02642E-09	9.40433E-09	0.0094043
3969253768639	396925	3768639	1.88832E-05	0	3.77664E-05	3.77664E-05	9.4416E-06	0	5.66496E-05	0	7.55328E-05	0	4.24949E-10	1.015E-08	1.05749E-08	0.0105749
3969753768639	396975	3768639	2.14132E-05	0	4.28265E-05	4.28265E-05	1.07066E-05	0	6.42397E-05	0	8.56529E-05	0	4.81885E-10	1.15099E-08	1.19918E-08	0.0119918
3970253768639	397025	3768639	2.43112E-05	0	4.86223E-05	4.86223E-05	1.21556E-05	0	7.29335E-05	0	9.72447E-05	0	5.471E-10	1.30676E-08	1.36147E-08	0.0136147
3970753768639	397075	3768639	2.75178E-05	0	5.50356E-05	5.50356E-05	1.37589E-05	0	8.25534E-05	0	0.000110071	0	6.19262E-10	1.47912E-08	1.54105E-08	0.0154105
3971253768639	397125	3768639	3.09663E-05	0	6.19327E-05	6.19327E-05	1.54832E-05	0	9.2899E-05	0	0.000123865	0	6.96869E-10	1.66448E-08	1.73417E-08	0.0173417
3971753768639	397175	3768639	3.5913E-05	0	7.1826E-05	7.1826E-05	1.79565E-05	0	0.000107739	0	0.000143652	0	8.08188E-10	1.93037E-08	2.01119E-08	0.0201119
3972253768639	397225	3768639	4.08874E-05	0	8.17747E-05	8.17747E-05	2.04437E-05	0	0.000122662	0	0.000163549	0	9.20132E-10	2.19775E-08	2.28977E-08	0.0228977
3972753768639	397275	3768639	4.61553E-05	0	9.23106E-05	9.23106E-05	2.30777E-05	0	0.000138466	0	0.000184621	0	1.03868E-09	2.48091E-08	2.58478E-08	0.0258478
3973253768639	397325	3768639	5.11914E-05	0	0.000102383	0.000102383	2.55957E-05	0	0.000153574	0	0.000204766	0	1.15202E-09	2.75161E-08	2.86681E-08	0.0286681
3973753768639	397375	3768639	5.4989E-05	0	0.000109978	0.000109978	2.74945E-05	0	0.000164967	0	0.000219956	0	1.23748E-09	2.95573E-08	3.07948E-08	0.0307948
3974253768639	397425	3768639	5.73413E-05	0	0.000114683	0.000114683	2.86707E-05	0	0.000172024	0	0.000229365	0	1.29041E-09	3.08218E-08	3.21122E-08	0.0321122
3974753768639	397475	3768639	5.59062E-05	0	0.000111812	0.000111812	2.79531E-05	0	0.000167719	0	0.000223625	0	1.25812E-09	3.00504E-08	3.13085E-08	0.0313085
3975253768639	397525	3768639	5.47672E-05	0	0.000109534	0.000109534	2.73836E-05	0	0.000164302	0	0.000219069	0	1.23249E-09	2.94381E-08	3.06706E-08	0.0306706
3964253768689	396425	3768689	6.54808E-06	0	1.30962E-05	1.30962E-05	3.27404E-06	0	1.96442E-05	0	2.61923E-05	0	1.47358E-10	3.51968E-09	3.66704E-09	0.003667
3964753768689	396475	3768689	7.4477E-06	0	1.48954E-05	1.48954E-05	3.72385E-06	0	2.23431E-05	0	2.97908E-05	0	1.67603E-10	4.00324E-09	4.17084E-09	0.0041708
3965253768689	396525	3768689	8.0424E-06	0	1.60848E-05	1.60848E-05	4.0212E-06	0	2.41272E-05	0	3.21696E-05	0	1.80987E-10	4.3229E-09	4.50389E-09	0.0045039
3965753768689	396575	3768689	8.72531E-06	0	1.74506E-05	1.74506E-05	4.36265E-06	0	2.61759E-05	0	3.49012E-05	0	1.96355E-10	4.68997E-09	4.88633E-09	0.0048863
3966253768689	396625	3768689	9.48759E-06	0	1.89752E-05	1.89752E-05	4.7438E-06	0	2.84628E-05	0	3.79504E-05	0	2.13509E-10	5.09971E-09	5.31322E-09	0.0053132
3966753768689	396675	3768689	1.03696E-05	0	2.07391E-05	2.07391E-05	5.18479E-06	0	3.11087E-05	0	4.14783E-05	0	2.33358E-10	5.57379E-09	5.80715E-09	0.0058071
3967253768689	396725	3768689	1.13637E-05	0	2.27274E-05	2.27274E-05	5.68184E-06	0	3.40911E-05	0	4.54548E-05	0	2.55729E-10	6.10814E-09	6.36387E-09	0.0063639
3967753768689	396775	3768689	1.25178E-05	0	2.50356E-05	2.50356E-05	6.25891E-06	0	3.75535E-05	0	5.00713E-05	0	2.81702E-10	6.7285E-09	7.01021E-09	0.0070102
3968253768689	396825	3768689	1.38547E-05	0	2.77093E-05	2.77093E-05	6.92733E-06	0	4.1564E-05	0	5.54186E-05	0	3.11786E-10	7.44707E-09	7.75885E-09	0.0077589
3968753768689	396875	3768689	1.54271E-05	0	3.08542E-05	3.08542E-05	7.71355E-06	0	4.62813E-05	0	6.17084E-05	0	3.47173E-10	8.29228E-09	8.63945E-09	0.0086395

Garvey Reservoir Rehab - Mitigated Standby Generator			Demolition - 2025	Demolition - 2026	ite Preparation - 202	te Preparation - 202	Grading - 2025	Grading - 2026	nfrastructure - 202	nfrastructure - 202	Paving - 2025	itectural Coating -	Child Risk			
Unique Identifier	X (UTM)	Y (UTM)	2025	1900	2025	2026	2026	1900	2026	1900	2026	1900	3rd Trimester	0<2	Total	per million
3969253768689	396925	3768689	1.72125E-05	0	3.4425E-05	3.4425E-05	8.60624E-06	0	5.16374E-05	0	6.88499E-05	0	3.87351E-10	9.25195E-09	9.6393E-09	0.0096393
3969753768689	396975	3768689	1.92801E-05	0	3.85602E-05	3.85602E-05	9.64005E-06	0	5.78403E-05	0	7.71204E-05	0	4.33881E-10	1.03633E-08	1.07972E-08	0.0107972
3970253768689	397025	3768689	2.1674E-05	0	4.33481E-05	4.33481E-05	1.0837E-05	0	6.50221E-05	0	8.66962E-05	0	4.87754E-10	1.16501E-08	1.21379E-08	0.0121379
3970753768689	397075	3768689	2.44485E-05	0	4.8897E-05	4.8897E-05	1.22243E-05	0	7.33455E-05	0	9.7794E-05	0	5.50191E-10	1.31414E-08	1.36916E-08	0.0136916
3971253768689	397125	3768689	2.70894E-05	0	5.41788E-05	5.41788E-05	1.35447E-05	0	8.12682E-05	0	0.000108358	0	6.09622E-10	1.45609E-08	1.51705E-08	0.0151705
3971753768689	397175	3768689	3.08668E-05	0	6.17336E-05	6.17336E-05	1.54334E-05	0	9.26004E-05	0	0.000123467	0	6.94629E-10	1.65913E-08	1.7286E-08	0.017286
3972253768689	397225	3768689	3.48609E-05	0	6.97218E-05	6.97218E-05	1.74305E-05	0	0.000104583	0	0.000139444	0	7.84512E-10	1.87382E-08	1.95227E-08	0.0195227
3972753768689	397275	3768689	3.87895E-05	0	7.7579E-05	7.7579E-05	1.93948E-05	0	0.000116369	0	0.000155158	0	8.72922E-10	2.08499E-08	2.17228E-08	0.0217228
3973253768689	397325	3768689	4.25593E-05	0	8.51187E-05	8.51187E-05	2.12797E-05	0	0.000127678	0	0.000170237	0	9.57758E-10	2.28762E-08	2.3834E-08	0.023834
3973753768689	397375	3768689	4.56312E-05	0	9.12623E-05	9.12623E-05	2.28156E-05	0	0.000136893	0	0.000182525	0	1.02689E-09	2.45274E-08	2.55543E-08	0.0255543
3974253768689	397425	3768689	4.76106E-05	0	9.52211E-05	9.52211E-05	2.38053E-05	0	0.000142832	0	0.000190442	0	1.07143E-09	2.55913E-08	2.66628E-08	0.0266628
3974753768689	397475	3768689	4.83288E-05	0	9.66575E-05	9.66575E-05	2.41644E-05	0	0.000144986	0	0.000193315	0	1.08759E-09	2.59774E-08	2.7065E-08	0.027065
3975253768689	397525	3768689	4.77391E-05	0	9.54782E-05	9.54782E-05	2.38695E-05	0	0.000143217	0	0.000190956	0	1.07432E-09	2.56604E-08	2.67347E-08	0.0267347

Garvey Reservoir Rehab - Mitigated Standby Generator

Offroad DPM Emissions, Ground Level Concentrations and Health Risk Calculations

Residential Receptors

Phase	Year	Emissions (lbs/day)	Meters	lbs/meter	meters (h1)	lbs/day (H1)	g/s (H1)	meters (h2)	lbs/day (H2)	g/s (H2)	hrs/day
Demolition - 2025	2025	0.0000	1932.1	0	691.2	0	0	1240.9	0	0	10.00
Demolition - 2026	1900		1932.1	0	691.2	0	0	1240.9	0	0	10.00
Site Preparation - 2025	2025	0.0000	1932.1	0	691.2	0	0	1240.9	0	0	10.00
Site Preparation - 2026	2026	0.0000	1932.1	0	691.2	0	0	1240.9	0	0	10.00
Grading - 2025	2026	0.0000	1932.1	0	691.2	0	0	1240.9	0	0	10.00
Grading - 2026	1900		1932.1	0	691.2	0	0	1240.9	0	0	10.00
Infrastructure - 2025	2026	0.0001	1932.1	6.52126E-08	691.2	4.50749E-05	5.67932E-07	1240.9	8.09223E-05	1.0196E-06	10.00
Infrastructure - 2026	1900		1932.1	0	691.2	0	0	1240.9	0	0	10.00
Paving - 2025	2026	0.0000	1932.1	0	691.2	0	0	1240.9	0	0	10.00
Architectural Coating - 2026	1900		1932.1	0	691.2	0	0	1240.9	0	0	10.00

		AERMOD Column Identifier:	*5*	*5*	*5*	*5*	*5*	*5*	*5*	*5*	*5*	*5*					
			6	*6*	*6*	*6*	*6*	*6*	*6*	*6*	*6*	*6*				*MAX:*	0.001422
Garvey Reservoir Rehab - Mitigated Standby Generator			Demolition - 2025	Demolition - 2026	Site Preparation - 2025	te Preparation - 202	Grading - 2025	Grading - 2026	Infrastructure - 2025	nfrastructure - 2026	Paving - 2025	rchitectural Coating - 202	Child Risk				
Unique Identifier	X (UTM)	Y (UTM)	2025	1900	2025	2026	2026	1900	2026	1900	2026	1900	3rd Trimester	0<2	Total	per million	
396166.283767377.2	396166.28	3767377	0	0	0	0	0	0	4.82584E-08	0	0	0	0	5.32037E-12	5.32037E-12	5.32E-06	
396266.283767377.2	396266.28	3767377	0	0	0	0	0	0	4.93524E-08	0	0	0	0	5.44099E-12	5.44099E-12	5.441E-06	
396366.283767377.2	396366.28	3767377	0	0	0	0	0	0	5.13596E-08	0	0	0	0	5.66228E-12	5.66228E-12	5.662E-06	
396466.283767377.2	396466.28	3767377	0	0	0	0	0	0	5.26977E-08	0	0	0	0	5.80981E-12	5.80981E-12	5.81E-06	
396566.283767377.2	396566.28	3767377	0	0	0	0	0	0	5.77712E-08	0	0	0	0	6.36914E-12	6.36914E-12	6.369E-06	
396666.283767377.2	396666.28	3767377	0	0	0	0	0	0	5.46195E-08	0	0	0	0	6.02167E-12	6.02167E-12	6.022E-06	
396766.283767377.2	396766.28	3767377	0	0	0	0	0	0	5.44053E-08	0	0	0	0	5.99805E-12	5.99805E-12	5.998E-06	
396866.283767377.2	396866.28	3767377	0	0	0	0	0	0	5.44529E-08	0	0	0	0	6.00331E-12	6.00331E-12	6.003E-06	
396966.283767377.2	396966.28	3767377	0	0	0	0	0	0	5.51734E-08	0	0	0	0	6.08274E-12	6.08274E-12	6.083E-06	
397066.283767377.2	397066.28	3767377	0	0	0	0	0	0	5.3782E-08	0	0	0	0	5.92935E-12	5.92935E-12	5.929E-06	
397166.283767377.2	397166.28	3767377	0	0	0	0	0	0	5.30464E-08	0	0	0	0	5.84824E-12	5.84824E-12	5.848E-06	
397266.283767377.2	397266.28	3767377	0	0	0	0	0	0	5.31104E-08	0	0	0	0	5.85529E-12	5.85529E-12	5.855E-06	
397366.283767377.2	397366.28	3767377	0	0	0	0	0	0	5.06893E-08	0	0	0	0	5.58838E-12	5.58838E-12	5.588E-06	
397466.283767377.2	397466.28	3767377	0	0	0	0	0	0	4.56335E-08	0	0	0	0	5.03099E-12	5.03099E-12	5.031E-06	
397566.283767377.2	397566.28	3767377	0	0	0	0	0	0	4.48866E-08	0	0	0	0	4.94864E-12	4.94864E-12	4.949E-06	
397666.283767377.2	397666.28	3767377	0	0	0	0	0	0	4.3569E-08	0	0	0	0	4.80339E-12	4.80339E-12	4.803E-06	
397766.283767377.2	397766.28	3767377	0	0	0	0	0	0	4.49648E-08	0	0	0	0	4.95727E-12	4.95727E-12	4.957E-06	
397866.283767377.2	397866.28	3767377	0	0	0	0	0	0	4.28292E-08	0	0	0	0	4.72182E-12	4.72182E-12	4.722E-06	
396166.283767477.2	396166.28	3767477	0	0	0	0	0	0	5.55344E-08	0	0	0	0	6.12254E-12	6.12254E-12	6.123E-06	
396266.283767477.2	396266.28	3767477	0	0	0	0	0	0	5.4263E-08	0	0	0	0	5.98237E-12	5.98237E-12	5.982E-06	
396366.283767477.2	396366.28	3767477	0	0	0	0	0	0	5.71677E-08	0	0	0	0	6.3026E-12	6.3026E-12	6.303E-06	
396466.283767477.2	396466.28	3767477	0	0	0	0	0	0	6.26129E-08	0	0	0	0	6.90293E-12	6.90293E-12	6.903E-06	
396566.283767477.2	396566.28	3767477	0	0	0	0	0	0	6.34637E-08	0	0	0	0	6.99673E-12	6.99673E-12	6.997E-06	
396666.283767477.2	396666.28	3767477	0	0	0	0	0	0	6.1621E-08	0	0	0	0	6.79357E-12	6.79357E-12	6.794E-06	
396766.283767477.2	396766.28	3767477	0	0	0	0	0	0	6.2103E-08	0	0	0	0	6.84671E-12	6.84671E-12	6.847E-06	
396866.283767477.2	396866.28	3767477	0	0	0	0	0	0	6.24656E-08	0	0	0	0	6.88669E-12	6.88669E-12	6.887E-06	
396966.283767477.2	396966.28	3767477	0	0	0	0	0	0	6.33955E-08	0	0	0	0	6.98921E-12	6.98921E-12	6.989E-06	
397066.283767477.2	397066.28	3767477	0	0	0	0	0	0	6.21772E-08	0	0	0	0	6.85489E-12	6.85489E-12	6.855E-06	
397166.283767477.2	397166.28	3767477	0	0	0	0	0	0	6.02189E-08	0	0	0	0	6.639E-12	6.639E-12	6.639E-06	
397266.283767477.2	397266.28	3767477	0	0	0	0	0	0	6.04179E-08	0	0	0	0	6.66093E-12	6.66093E-12	6.661E-06	
397366.283767477.2	397366.28	3767477	0	0	0	0	0	0	5.86004E-08	0	0	0	0	6.46056E-12	6.46056E-12	6.461E-06	
397466.283767477.2	397466.28	3767477	0	0	0	0	0	0	5.28551E-08	0	0	0	0	5.82715E-12	5.82715E-12	5.827E-06	
397566.283767477.2	397566.28	3767477	0	0	0	0	0	0	5.01255E-08	0	0	0	0	5.52622E-12	5.52622E-12	5.526E-06	
397666.283767477.2	397666.28	3767477	0	0	0	0	0	0	4.90262E-08	0	0	0	0	5.40502E-12	5.40502E-12	5.405E-06	
397766.283767477.2	397766.28	3767477	0	0	0	0	0	0	4.78618E-08	0	0	0	0	5.27665E-12	5.27665E-12	5.277E-06	
397866.283767477.2	397866.28	3767477	0	0	0	0	0	0	4.60623E-08	0	0	0	0	5.07826E-12	5.07826E-12	5.078E-06	
396166.283767577.2	396166.28	3767577	0	0	0	0	0	0	5.85404E-08	0	0	0	0	6.45395E-12	6.45395E-12	6.454E-06	
396266.283767577.2	396266.28	3767577	0	0	0	0	0	0	6.01789E-08	0	0	0	0	6.63459E-12	6.63459E-12	6.635E-06	
396366.283767577.2	396366.28	3767577	0	0	0	0	0	0	6.29392E-08	0	0	0	0	6.9389E-12	6.9389E-12	6.939E-06	
396466.283767577.2	396466.28	3767577	0	0	0	0	0	0	6.68318E-08	0	0	0	0	7.36805E-12	7.36805E-12	7.368E-06	
396566.283767577.2	396566.28	3767577	0	0	0	0	0	0	7.42387E-08	0	0	0	0	8.18465E-12	8.18465E-12	8.185E-06	
396666.283767577.2	396666.28	3767577	0	0	0	0	0	0	7.53816E-08	0	0	0	0	8.31064E-12	8.31064E-12	8.311E-06	
396766.283767577.2	396766.28	3767577	0	0	0	0	0	0	7.10828E-08	0	0	0	0	7.83671E-12	7.83671E-12	7.837E-06	
396866.283767577.2	396866.28	3767577	0	0	0	0	0	0	7.2875E-08	0	0	0	0	8.0343E-12	8.0343E-12	8.034E-06	

Garvey Reservoir Rehab - Mitigated Standby Generator			Demolition - 2025	Demolition - 2026	Site Preparation - 2025	te Preparation - 202	Grading - 2025	Grading - 2026	Infrastructure - 2025	nfrastructure - 2026	Paving - 2025	rchitectural Coating - 202	Child Risk			
Unique Identifier	X (UTM)	Y (UTM)	2025	1900	2025	2026	2026	1900	2026	1900	2026	1900	3rd Trimester	0<2	Total	per million
396966.283767577.2	396966.28	3767577	0	0	0	0	0	0	7.38717E-08	0	0	0	0	8.14418E-12	8.14418E-12	8.144E-06
397066.283767577.2	397066.28	3767577	0	0	0	0	0	0	7.38894E-08	0	0	0	0	8.14614E-12	8.14614E-12	8.146E-06
397166.283767577.2	397166.28	3767577	0	0	0	0	0	0	7.11631E-08	0	0	0	0	7.84557E-12	7.84557E-12	7.846E-06
397266.283767577.2	397266.28	3767577	0	0	0	0	0	0	7.02197E-08	0	0	0	0	7.74156E-12	7.74156E-12	7.742E-06
397366.283767577.2	397366.28	3767577	0	0	0	0	0	0	6.84696E-08	0	0	0	0	7.54862E-12	7.54862E-12	7.549E-06
397466.283767577.2	397466.28	3767577	0	0	0	0	0	0	6.09922E-08	0	0	0	0	6.72425E-12	6.72425E-12	6.724E-06
397566.283767577.2	397566.28	3767577	0	0	0	0	0	0	5.75304E-08	0	0	0	0	6.3426E-12	6.3426E-12	6.343E-06
397666.283767577.2	397666.28	3767577	0	0	0	0	0	0	5.44013E-08	0	0	0	0	5.99762E-12	5.99762E-12	5.998E-06
397766.283767577.2	397766.28	3767577	0	0	0	0	0	0	5.23333E-08	0	0	0	0	5.76963E-12	5.76963E-12	5.77E-06
397866.283767577.2	397866.28	3767577	0	0	0	0	0	0	4.97493E-08	0	0	0	0	5.48474E-12	5.48474E-12	5.485E-06
396166.283767677.2	396166.28	3767677	0	0	0	0	0	0	7.08796E-08	0	0	0	0	7.81431E-12	7.81431E-12	7.814E-06
396266.283767677.2	396266.28	3767677	0	0	0	0	0	0	6.70624E-08	0	0	0	0	7.39348E-12	7.39348E-12	7.393E-06
396366.283767677.2	396366.28	3767677	0	0	0	0	0	0	7.14612E-08	0	0	0	0	7.87843E-12	7.87843E-12	7.878E-06
396466.283767677.2	396466.28	3767677	0	0	0	0	0	0	8.45253E-08	0	0	0	0	9.31872E-12	9.31872E-12	9.319E-06
396566.283767677.2	396566.28	3767677	0	0	0	0	0	0	8.5292E-08	0	0	0	0	9.40324E-12	9.40324E-12	9.403E-06
396666.283767677.2	396666.28	3767677	0	0	0	0	0	0	7.98975E-08	0	0	0	0	8.80852E-12	8.80852E-12	8.809E-06
396766.283767677.2	396766.28	3767677	0	0	0	0	0	0	8.31757E-08	0	0	0	0	9.16993E-12	9.16993E-12	9.17E-06
396866.283767677.2	396866.28	3767677	0	0	0	0	0	0	8.78496E-08	0	0	0	0	9.68522E-12	9.68522E-12	9.685E-06
396966.283767677.2	396966.28	3767677	0	0	0	0	0	0	8.88059E-08	0	0	0	0	9.79065E-12	9.79065E-12	9.791E-06
397066.283767677.2	397066.28	3767677	0	0	0	0	0	0	8.85386E-08	0	0	0	0	9.76118E-12	9.76118E-12	9.761E-06
397166.283767677.2	397166.28	3767677	0	0	0	0	0	0	8.65801E-08	0	0	0	0	9.54526E-12	9.54526E-12	9.545E-06
397266.283767677.2	397266.28	3767677	0	0	0	0	0	0	7.93981E-08	0	0	0	0	8.75346E-12	8.75346E-12	8.753E-06
397366.283767677.2	397366.28	3767677	0	0	0	0	0	0	8.07646E-08	0	0	0	0	8.90411E-12	8.90411E-12	8.904E-06
397466.283767677.2	397466.28	3767677	0	0	0	0	0	0	6.9462E-08	0	0	0	0	7.65802E-12	7.65802E-12	7.658E-06
397566.283767677.2	397566.28	3767677	0	0	0	0	0	0	6.66442E-08	0	0	0	0	7.34737E-12	7.34737E-12	7.347E-06
397666.283767677.2	397666.28	3767677	0	0	0	0	0	0	6.27614E-08	0	0	0	0	6.9193E-12	6.9193E-12	6.919E-06
397766.283767677.2	397766.28	3767677	0	0	0	0	0	0	5.85869E-08	0	0	0	0	6.45907E-12	6.45907E-12	6.459E-06
397866.283767677.2	397866.28	3767677	0	0	0	0	0	0	5.5754E-08	0	0	0	0	6.14675E-12	6.14675E-12	6.147E-06
396166.283767777.2	396166.28	3767777	0	0	0	0	0	0	7.9549E-08	0	0	0	0	8.77009E-12	8.77009E-12	8.77E-06
396266.283767777.2	396266.28	3767777	0	0	0	0	0	0	9.03676E-08	0	0	0	0	9.96282E-12	9.96282E-12	9.963E-06
396366.283767777.2	396366.28	3767777	0	0	0	0	0	0	8.79503E-08	0	0	0	0	9.69632E-12	9.69632E-12	9.696E-06
396466.283767777.2	396466.28	3767777	0	0	0	0	0	0	9.28522E-08	0	0	0	0	1.02367E-11	1.02367E-11	1.024E-05
396566.283767777.2	396566.28	3767777	0	0	0	0	0	0	8.79114E-08	0	0	0	0	9.69203E-12	9.69203E-12	9.692E-06
396666.283767777.2	396666.28	3767777	0	0	0	0	0	0	9.2456E-08	0	0	0	0	1.01931E-11	1.01931E-11	1.019E-05
396766.283767777.2	396766.28	3767777	0	0	0	0	0	0	1.0134E-07	0	0	0	0	1.11726E-11	1.11726E-11	1.117E-05
396866.283767777.2	396866.28	3767777	0	0	0	0	0	0	1.08223E-07	0	0	0	0	1.19314E-11	1.19314E-11	1.193E-05
396966.283767777.2	396966.28	3767777	0	0	0	0	0	0	1.06896E-07	0	0	0	0	1.17851E-11	1.17851E-11	1.179E-05
397066.283767777.2	397066.28	3767777	0	0	0	0	0	0	1.07043E-07	0	0	0	0	1.18012E-11	1.18012E-11	1.18E-05
397166.283767777.2	397166.28	3767777	0	0	0	0	0	0	1.07189E-07	0	0	0	0	1.18174E-11	1.18174E-11	1.182E-05
397266.283767777.2	397266.28	3767777	0	0	0	0	0	0	9.97286E-08	0	0	0	0	1.09949E-11	1.09949E-11	1.099E-05
397366.283767777.2	397366.28	3767777	0	0	0	0	0	0	9.77948E-08	0	0	0	0	1.07817E-11	1.07817E-11	1.078E-05
397466.283767777.2	397466.28	3767777	0	0	0	0	0	0	8.4394E-08	0	0	0	0	9.30424E-12	9.30424E-12	9.304E-06
397566.283767777.2	397566.28	3767777	0	0	0	0	0	0	7.78492E-08	0	0	0	0	8.58269E-12	8.58269E-12	8.583E-06
397666.283767777.2	397666.28	3767777	0	0	0	0	0	0	7.40874E-08	0	0	0	0	8.16797E-12	8.16797E-12	8.168E-06
397766.283767777.2	397766.28	3767777	0	0	0	0	0	0	6.61501E-08	0	0	0	0	7.2929E-12	7.2929E-12	7.293E-06
397866.283767777.2	397866.28	3767777	0	0	0	0	0	0	6.03086E-08	0	0	0	0	6.64889E-12	6.64889E-12	6.649E-06
396166.283767877.2	396166.28	3767877	0	0	0	0	0	0	8.7916E-08	0	0	0	0	9.69254E-12	9.69254E-12	9.693E-06
396266.283767877.2	396266.28	3767877	0	0	0	0	0	0	1.01545E-07	0	0	0	0	1.11951E-11	1.11951E-11	1.12E-05
396366.283767877.2	396366.28	3767877	0	0	0	0	0	0	1.07341E-07	0	0	0	0	1.18341E-11	1.18341E-11	1.183E-05
396466.283767877.2	396466.28	3767877	0	0	0	0	0	0	1.01855E-07	0	0	0	0	1.12293E-11	1.12293E-11	1.123E-05
396566.283767877.2	396566.28	3767877	0	0	0	0	0	0	1.0081E-07	0	0	0	0	1.11141E-11	1.11141E-11	1.111E-05
397466.283767877.2	397466.28	3767877	0	0	0	0	0	0	1.18192E-07	0	0	0	0	1.30304E-11	1.30304E-11	1.303E-05
397566.283767877.2	397566.28	3767877	0	0	0	0	0	0	9.30936E-08	0	0	0	0	1.02634E-11	1.02634E-11	1.026E-05
397666.283767877.2	397666.28	3767877	0	0	0	0	0	0	7.84755E-08	0	0	0	0	8.65174E-12	8.65174E-12	8.652E-06
397766.283767877.2	397766.28	3767877	0	0	0	0	0	0	6.9464E-08	0	0	0	0	7.65824E-12	7.65824E-12	7.658E-06
397866.283767877.2	397866.28	3767877	0	0	0	0	0	0	6.95791E-08	0	0	0	0	7.67094E-12	7.67094E-12	7.671E-06
396166.283767977.2	396166.28	3767977	0	0	0	0	0	0	9.21507E-08	0	0	0	0	1.01594E-11	1.01594E-11	1.016E-05
396266.283767977.2	396266.28	3767977	0	0	0	0	0	0	1.0649E-07	0	0	0	0	1.17402E-11	1.17402E-11	1.174E-05
396366.283767977.2	396366.28	3767977	0	0	0	0	0	0	1.1518E-07	0	0	0	0	1.26983E-11	1.26983E-11	1.27E-05
396466.283767977.2	396466.28	3767977	0	0	0	0	0	0	1.10665E-07	0	0	0	0	1.22006E-11	1.22006E-11	1.22E-05
397466.283767977.2	397466.28	3767977	0	0	0	0	0	0	1.39392E-07	0	0	0	0	1.53677E-11	1.53677E-11	1.537E-05
397566.283767977.2	397566.28	3767977	0	0	0	0	0	0	1.12568E-07	0	0	0	0	1.24104E-11	1.24104E-11	1.241E-05
397666.283767977.2	397666.28	3767977	0	0	0	0	0	0	9.34362E-08	0	0	0	0	1.03011E-11	1.03011E-11	1.03E-05
397766.283767977.2	397766.28	3767977	0	0	0	0	0	0	9.41203E-08	0	0	0	0	1.03765E-11	1.03765E-11	1.038E-05
397866.283767977.2	397866.28	3767977	0	0	0	0	0	0	8.60711E-08	0	0	0	0	9.48914E-12	9.48914E-12	9.489E-06
396166.283768077.2	396166.28	3768077	0	0	0	0	0	0	1.24227E-07	0	0	0	0	1.36958E-11	1.36958E-11	1.37E-05
396266.283768077.2	396266.28	3768077	0	0	0	0	0	0	1.17734E-07	0	0	0	0	1.29799E-11	1.29799E-11	1.298E-05
396366.283768077.2	396366.28	3768077	0	0	0	0	0	0	1.27762E-07	0	0	0	0	1.40854E-11	1.40854E-11	1.409E-05
396466.283768077.2	396466.28	3768077	0	0	0	0	0	0	1.38306E-07	0	0	0	0	1.52479E-11	1.52479E-11	1.525E-05
397466.283768077.2	397466.28	3768077	0	0	0	0	0	0	2.41898E-07	0	0	0	0	2.66687E-11	2.66687E-11	2.667E-05
397566.283768077.2	397566.28	3768077	0	0	0	0	0	0	1.91162E-07	0	0	0	0	2.10752E-11	2.10752E-11	2.108E-05

Garvey Reservoir Rehab - Mitigated Standby Generator			Demolition - 2025	Demolition - 2026	Site Preparation - 2025	te Preparation - 202	Grading - 2025	Grading - 2026	Infrastructure - 2025	nfrastructure - 2026	Paving - 2025	rchitectural Coating - 202	Child Risk			
Unique Identifier	X (UTM)	Y (UTM)	2025	1900	2025	2026	2026	1900	2026	1900	2026	1900	3rd Trimester	0<2	Total	per million
397666.283768077.2	397666.28	3768077	0	0	0	0	0	0	1.43419E-07	0	0	0	0	1.58116E-11	1.58116E-11	1.581E-05
397766.283768077.2	397766.28	3768077	0	0	0	0	0	0	1.1198E-07	0	0	0	0	1.23456E-11	1.23456E-11	1.235E-05
397866.283768077.2	397866.28	3768077	0	0	0	0	0	0	9.70612E-08	0	0	0	0	1.07008E-11	1.07008E-11	1.07E-05
396166.283768177.2	396166.28	3768177	0	0	0	0	0	0	1.49824E-07	0	0	0	0	1.65178E-11	1.65178E-11	1.652E-05
396266.283768177.2	396266.28	3768177	0	0	0	0	0	0	1.54745E-07	0	0	0	0	1.70603E-11	1.70603E-11	1.706E-05
396366.283768177.2	396366.28	3768177	0	0	0	0	0	0	1.68458E-07	0	0	0	0	1.85721E-11	1.85721E-11	1.857E-05
396466.283768177.2	396466.28	3768177	0	0	0	0	0	0	1.65874E-07	0	0	0	0	1.82872E-11	1.82872E-11	1.829E-05
397466.283768177.2	397466.28	3768177	0	0	0	0	0	0	5.29026E-07	0	0	0	0	5.83239E-11	5.83239E-11	5.832E-05
397566.283768177.2	397566.28	3768177	0	0	0	0	0	0	2.77513E-07	0	0	0	0	3.05951E-11	3.05951E-11	3.06E-05
397666.283768177.2	397666.28	3768177	0	0	0	0	0	0	1.89379E-07	0	0	0	0	2.08786E-11	2.08786E-11	2.088E-05
397766.283768177.2	397766.28	3768177	0	0	0	0	0	0	1.39652E-07	0	0	0	0	1.53963E-11	1.53963E-11	1.54E-05
397866.283768177.2	397866.28	3768177	0	0	0	0	0	0	1.1459E-07	0	0	0	0	1.26333E-11	1.26333E-11	1.263E-05
396166.283768277.2	396166.28	3768277	0	0	0	0	0	0	1.7819E-07	0	0	0	0	1.9645E-11	1.9645E-11	1.965E-05
396266.283768277.2	396266.28	3768277	0	0	0	0	0	0	1.75353E-07	0	0	0	0	1.93322E-11	1.93322E-11	1.933E-05
396366.283768277.2	396366.28	3768277	0	0	0	0	0	0	1.96843E-07	0	0	0	0	2.17015E-11	2.17015E-11	2.17E-05
396466.283768277.2	396466.28	3768277	0	0	0	0	0	0	2.03696E-07	0	0	0	0	2.2457E-11	2.2457E-11	2.246E-05
397366.283768277.2	397366.28	3768277	0	0	0	0	0	0	4.20457E-06	0	0	0	0	4.63544E-10	4.63544E-10	0.0004635
397466.283768277.2	397466.28	3768277	0	0	0	0	0	0	8.25359E-07	0	0	0	0	9.09939E-11	9.09939E-11	9.099E-05
397566.283768277.2	397566.28	3768277	0	0	0	0	0	0	3.76802E-07	0	0	0	0	4.15415E-11	4.15415E-11	4.154E-05
397666.283768277.2	397666.28	3768277	0	0	0	0	0	0	2.36098E-07	0	0	0	0	2.60293E-11	2.60293E-11	2.603E-05
397766.283768277.2	397766.28	3768277	0	0	0	0	0	0	1.69126E-07	0	0	0	0	1.86458E-11	1.86458E-11	1.865E-05
397866.283768277.2	397866.28	3768277	0	0	0	0	0	0	1.30201E-07	0	0	0	0	1.43544E-11	1.43544E-11	1.435E-05
396166.283768377.2	396166.28	3768377	0	0	0	0	0	0	2.09999E-07	0	0	0	0	2.31519E-11	2.31519E-11	2.315E-05
396266.283768377.2	396266.28	3768377	0	0	0	0	0	0	2.18663E-07	0	0	0	0	2.41071E-11	2.41071E-11	2.411E-05
396366.283768377.2	396366.28	3768377	0	0	0	0	0	0	2.44136E-07	0	0	0	0	2.69155E-11	2.69155E-11	2.692E-05
396466.283768377.2	396466.28	3768377	0	0	0	0	0	0	2.63395E-07	0	0	0	0	2.90386E-11	2.90386E-11	2.904E-05
397266.283768377.2	397266.28	3768377	0	0	0	0	0	0	6.60068E-06	0	0	0	0	7.27709E-10	7.27709E-10	0.0007277
397366.283768377.2	397366.28	3768377	0	0	0	0	0	0	2.96878E-06	0	0	0	0	3.27301E-10	3.27301E-10	0.0003273
397466.283768377.2	397466.28	3768377	0	0	0	0	0	0	9.57957E-07	0	0	0	0	1.05613E-10	1.05613E-10	0.0001056
397566.283768377.2	397566.28	3768377	0	0	0	0	0	0	4.59895E-07	0	0	0	0	5.07024E-11	5.07024E-11	5.07E-05
397666.283768377.2	397666.28	3768377	0	0	0	0	0	0	2.78761E-07	0	0	0	0	3.07328E-11	3.07328E-11	3.073E-05
397766.283768377.2	397766.28	3768377	0	0	0	0	0	0	1.95974E-07	0	0	0	0	2.16056E-11	2.16056E-11	2.161E-05
397866.283768377.2	397866.28	3768377	0	0	0	0	0	0	1.40971E-07	0	0	0	0	1.55417E-11	1.55417E-11	1.554E-05
396166.283768477.2	396166.28	3768477	0	0	0	0	0	0	2.57641E-07	0	0	0	0	2.84043E-11	2.84043E-11	2.84E-05
396266.283768477.2	396266.28	3768477	0	0	0	0	0	0	2.77657E-07	0	0	0	0	3.0611E-11	3.0611E-11	3.061E-05
396366.283768477.2	396366.28	3768477	0	0	0	0	0	0	3.07757E-07	0	0	0	0	3.39295E-11	3.39295E-11	3.393E-05
396466.283768477.2	396466.28	3768477	0	0	0	0	0	0	3.44617E-07	0	0	0	0	3.79932E-11	3.79932E-11	3.799E-05
397166.283768477.2	397166.28	3768477	0	0	0	0	0	0	1.2268E-06	0	0	0	0	1.35252E-10	1.35252E-10	0.0001353
397266.283768477.2	397266.28	3768477	0	0	0	0	0	0	6.70005E-06	0	0	0	0	7.38665E-10	7.38665E-10	0.0007387
397366.283768477.2	397366.28	3768477	0	0	0	0	0	0	2.7145E-06	0	0	0	0	2.99267E-10	2.99267E-10	0.0002993
397466.283768477.2	397466.28	3768477	0	0	0	0	0	0	8.8282E-07	0	0	0	0	9.73288E-11	9.73288E-11	9.733E-05
397566.283768477.2	397566.28	3768477	0	0	0	0	0	0	5.27707E-07	0	0	0	0	5.81784E-11	5.81784E-11	5.818E-05
397666.283768477.2	397666.28	3768477	0	0	0	0	0	0	3.27457E-07	0	0	0	0	3.61013E-11	3.61013E-11	3.61E-05
397766.283768477.2	397766.28	3768477	0	0	0	0	0	0	2.07168E-07	0	0	0	0	2.28398E-11	2.28398E-11	2.284E-05
397866.283768477.2	397866.28	3768477	0	0	0	0	0	0	1.61501E-07	0	0	0	0	1.78051E-11	1.78051E-11	1.781E-05
396166.283768577.2	396166.28	3768577	0	0	0	0	0	0	3.27836E-07	0	0	0	0	3.61431E-11	3.61431E-11	3.614E-05
396266.283768577.2	396266.28	3768577	0	0	0	0	0	0	3.69551E-07	0	0	0	0	4.07422E-11	4.07422E-11	4.074E-05
396366.283768577.2	396366.28	3768577	0	0	0	0	0	0	3.98699E-07	0	0	0	0	4.39556E-11	4.39556E-11	4.396E-05
396466.283768577.2	396466.28	3768577	0	0	0	0	0	0	4.78759E-07	0	0	0	0	5.27821E-11	5.27821E-11	5.278E-05
396566.283768577.2	396566.28	3768577	0	0	0	0	0	0	4.68876E-07	0	0	0	0	5.16924E-11	5.16924E-11	5.169E-05
396866.283768577.2	396866.28	3768577	0	0	0	0	0	0	6.0002E-07	0	0	0	0	6.61509E-11	6.61509E-11	6.615E-05
396966.283768577.2	396966.28	3768577	0	0	0	0	0	0	6.96704E-07	0	0	0	0	7.68101E-11	7.68101E-11	7.681E-05
397066.283768577.2	397066.28	3768577	0	0	0	0	0	0	8.61054E-07	0	0	0	0	9.49292E-11	9.49292E-11	9.493E-05
397166.283768577.2	397166.28	3768577	0	0	0	0	0	0	1.47425E-06	0	0	0	0	1.62533E-10	1.62533E-10	0.0001625
397266.283768577.2	397266.28	3768577	0	0	0	0	0	0	6.49954E-06	0	0	0	0	7.16559E-10	7.16559E-10	0.0007166
397366.283768577.2	397366.28	3768577	0	0	0	0	0	0	2.72239E-06	0	0	0	0	3.00137E-10	3.00137E-10	0.0003001
397466.283768577.2	397466.28	3768577	0	0	0	0	0	0	8.72314E-07	0	0	0	0	9.61706E-11	9.61706E-11	9.617E-05
397566.283768577.2	397566.28	3768577	0	0	0	0	0	0	5.22169E-07	0	0	0	0	5.75679E-11	5.75679E-11	5.757E-05
397666.283768577.2	397666.28	3768577	0	0	0	0	0	0	3.47143E-07	0	0	0	0	3.82717E-11	3.82717E-11	3.827E-05
397766.283768577.2	397766.28	3768577	0	0	0	0	0	0	2.47039E-07	0	0	0	0	2.72354E-11	2.72354E-11	2.724E-05
397866.283768577.2	397866.28	3768577	0	0	0	0	0	0	1.80373E-07	0	0	0	0	1.98857E-11	1.98857E-11	1.989E-05
396166.283768677.2	396166.28	3768677	0	0	0	0	0	0	5.75926E-07	0	0	0	0	6.34945E-11	6.34945E-11	6.349E-05
396266.283768677.2	396266.28	3768677	0	0	0	0	0	0	6.57528E-07	0	0	0	0	7.2491E-11	7.2491E-11	7.249E-05
396366.283768677.2	396366.28	3768677	0	0	0	0	0	0	6.38467E-07	0	0	0	0	7.03895E-11	7.03895E-11	7.039E-05
396466.283768677.2	396466.28	3768677	0	0	0	0	0	0	7.83836E-07	0	0	0	0	8.64161E-11	8.64161E-11	8.642E-05
396566.283768677.2	396566.28	3768677	0	0	0	0	0	0	7.92388E-07	0	0	0	0	8.7359E-11	8.7359E-11	8.736E-05
396666.283768677.2	396666.28	3768677	0	0	0	0	0	0	8.08991E-07	0	0	0	0	8.91894E-11	8.91894E-11	8.919E-05
396766.283768677.2	396766.28	3768677	0	0	0	0	0	0	8.39518E-07	0	0	0	0	9.2555E-11	9.2555E-11	9.255E-05
396866.283768677.2	396866.28	3768677	0	0	0	0	0	0	9.32354E-07	0	0	0	0	1.0279E-10	1.0279E-10	0.0001028
396966.283768677.2	396966.28	3768677	0	0	0	0	0	0	1.02056E-06	0	0	0	0	1.12515E-10	1.12515E-10	0.0001125
397066.283768677.2	397066.28	3768677	0	0	0	0	0	0	1.18384E-06	0	0	0	0	1.30516E-10	1.30516E-10	0.0001305

Garvey Reservoir Rehab - Mitigated Standby Generator			Demolition - 2025	Demolition - 2026	Site Preparation - 2025	ite Preparation - 202	Grading - 2025	Grading - 2026	Infrastructure - 2025	nfrastructure - 2026	Paving - 2025	rchitectural Coating - 202	Child Risk			
Unique Identifier	X (UTM)	Y (UTM)	2025	1900	2025	2026	2026	1900	2026	1900	2026	1900	3rd Trimester	0<2	Total	per million
397166.283768677.2	397166.28	3768677	0	0	0	0	0	0	1.85806E-06	0	0	0	0	2.04847E-10	2.04847E-10	0.0002048
397366.283768677.2	397366.28	3768677	0	0	0	0	0	0	2.47083E-06	0	0	0	0	2.72403E-10	2.72403E-10	0.0002724
397466.283768677.2	397466.28	3768677	0	0	0	0	0	0	9.95508E-07	0	0	0	0	1.09752E-10	1.09752E-10	0.0001098
397566.283768677.2	397566.28	3768677	0	0	0	0	0	0	5.42881E-07	0	0	0	0	5.98514E-11	5.98514E-11	5.985E-05
397666.283768677.2	397666.28	3768677	0	0	0	0	0	0	3.55687E-07	0	0	0	0	3.92137E-11	3.92137E-11	3.921E-05
397766.283768677.2	397766.28	3768677	0	0	0	0	0	0	2.62349E-07	0	0	0	0	2.89234E-11	2.89234E-11	2.892E-05
397866.283768677.2	397866.28	3768677	0	0	0	0	0	0	1.9264E-07	0	0	0	0	2.12381E-11	2.12381E-11	2.124E-05
396166.283768777.2	396166.28	3768777	0	0	0	0	0	0	1.67232E-06	0	0	0	0	1.8437E-10	1.8437E-10	0.0001844
396266.283768777.2	396266.28	3768777	0	0	0	0	0	0	2.07798E-06	0	0	0	0	2.29093E-10	2.29093E-10	0.0002291
396366.283768777.2	396366.28	3768777	0	0	0	0	0	0	1.52339E-06	0	0	0	0	1.67951E-10	1.67951E-10	0.000168
396466.283768777.2	396466.28	3768777	0	0	0	0	0	0	1.99065E-06	0	0	0	0	2.19464E-10	2.19464E-10	0.0002195
396566.283768777.2	396566.28	3768777	0	0	0	0	0	0	2.13172E-06	0	0	0	0	2.35017E-10	2.35017E-10	0.000235
396666.283768777.2	396666.28	3768777	0	0	0	0	0	0	2.13097E-06	0	0	0	0	2.34935E-10	2.34935E-10	0.0002349
396766.283768777.2	396766.28	3768777	0	0	0	0	0	0	2.20438E-06	0	0	0	0	2.43028E-10	2.43028E-10	0.000243
396866.283768777.2	396866.28	3768777	0	0	0	0	0	0	2.29184E-06	0	0	0	0	2.5267E-10	2.5267E-10	0.0002527
396966.283768777.2	396966.28	3768777	0	0	0	0	0	0	2.34836E-06	0	0	0	0	2.58901E-10	2.58901E-10	0.0002589
397066.283768777.2	397066.28	3768777	0	0	0	0	0	0	2.52992E-06	0	0	0	0	2.78917E-10	2.78917E-10	0.0002789
397166.283768777.2	397166.28	3768777	0	0	0	0	0	0	3.04664E-06	0	0	0	0	3.35885E-10	3.35885E-10	0.0003359
397266.283768777.2	397266.28	3768777	0	0	0	0	0	0	9.71729E-06	0	0	0	0	1.07131E-09	1.07131E-09	0.0010713
397366.283768777.2	397366.28	3768777	0	0	0	0	0	0	3.37633E-06	0	0	0	0	3.72233E-10	3.72233E-10	0.0003722
397466.283768777.2	397466.28	3768777	0	0	0	0	0	0	1.18753E-06	0	0	0	0	1.30922E-10	1.30922E-10	0.0001309
397566.283768777.2	397566.28	3768777	0	0	0	0	0	0	6.36904E-07	0	0	0	0	7.02172E-11	7.02172E-11	7.022E-05
397666.283768777.2	397666.28	3768777	0	0	0	0	0	0	4.00561E-07	0	0	0	0	4.41609E-11	4.41609E-11	4.416E-05
397766.283768777.2	397766.28	3768777	0	0	0	0	0	0	2.74228E-07	0	0	0	0	3.02331E-11	3.02331E-11	3.023E-05
397866.283768777.2	397866.28	3768777	0	0	0	0	0	0	1.99621E-07	0	0	0	0	2.20077E-11	2.20077E-11	2.201E-05
396166.283768877.2	396166.28	3768877	0	0	0	0	0	0	6.73295E-06	0	0	0	0	7.42292E-10	7.42292E-10	0.0007423
396266.283768877.2	396266.28	3768877	0	0	0	0	0	0	8.6713E-06	0	0	0	0	9.55991E-10	9.55991E-10	0.000956
396366.283768877.2	396366.28	3768877	0	0	0	0	0	0	8.49094E-06	0	0	0	0	9.36107E-10	9.36107E-10	0.0009361
396466.283768877.2	396466.28	3768877	0	0	0	0	0	0	9.35342E-06	0	0	0	0	1.03119E-09	1.03119E-09	0.0010312
396566.283768877.2	396566.28	3768877	0	0	0	0	0	0	8.82157E-06	0	0	0	0	9.72558E-10	9.72558E-10	0.0009726
396666.283768877.2	396666.28	3768877	0	0	0	0	0	0	9.58412E-06	0	0	0	0	1.05663E-09	1.05663E-09	0.0010566
396766.283768877.2	396766.28	3768877	0	0	0	0	0	0	9.27598E-06	0	0	0	0	1.02265E-09	1.02265E-09	0.0010227
396866.283768877.2	396866.28	3768877	0	0	0	0	0	0	9.01067E-06	0	0	0	0	9.93405E-10	9.93405E-10	0.0009934
396966.283768877.2	396966.28	3768877	0	0	0	0	0	0	8.6645E-06	0	0	0	0	9.55241E-10	9.55241E-10	0.0009552
397066.283768877.2	397066.28	3768877	0	0	0	0	0	0	8.7596E-06	0	0	0	0	9.65725E-10	9.65725E-10	0.0009657
397166.283768877.2	397166.28	3768877	0	0	0	0	0	0	9.00308E-06	0	0	0	0	9.92569E-10	9.92569E-10	0.0009926
397266.283768877.2	397266.28	3768877	0	0	0	0	0	0	9.45846E-06	0	0	0	0	1.04277E-09	1.04277E-09	0.0010428
397366.283768877.2	397366.28	3768877	0	0	0	0	0	0	4.65064E-06	0	0	0	0	5.12723E-10	5.12723E-10	0.0005127
397466.283768877.2	397466.28	3768877	0	0	0	0	0	0	1.2446E-06	0	0	0	0	1.37214E-10	1.37214E-10	0.0001372
397566.283768877.2	397566.28	3768877	0	0	0	0	0	0	6.36416E-07	0	0	0	0	7.01634E-11	7.01634E-11	7.016E-05
397666.283768877.2	397666.28	3768877	0	0	0	0	0	0	3.94762E-07	0	0	0	0	4.35216E-11	4.35216E-11	4.352E-05
397766.283768877.2	397766.28	3768877	0	0	0	0	0	0	2.72878E-07	0	0	0	0	3.00842E-11	3.00842E-11	3.008E-05
397866.283768877.2	397866.28	3768877	0	0	0	0	0	0	2.01962E-07	0	0	0	0	2.22658E-11	2.22658E-11	2.227E-05
3964253767739	396425	3767739	0	0	0	0	0	0	9.0768E-08	0	0	0	0	1.0007E-11	1.0007E-11	1.001E-05
3964753767739	396475	3767739	0	0	0	0	0	0	9.29366E-08	0	0	0	0	1.0246E-11	1.0246E-11	1.025E-05
3965253767739	396525	3767739	0	0	0	0	0	0	8.6624E-08	0	0	0	0	9.55009E-12	9.55009E-12	9.55E-06
3965753767739	396575	3767739	0	0	0	0	0	0	8.91282E-08	0	0	0	0	9.82617E-12	9.82617E-12	9.826E-06
3966253767739	396625	3767739	0	0	0	0	0	0	8.56001E-08	0	0	0	0	9.43721E-12	9.43721E-12	9.437E-06
3966753767739	396675	3767739	0	0	0	0	0	0	8.75942E-08	0	0	0	0	9.65706E-12	9.65706E-12	9.657E-06
3967253767739	396725	3767739	0	0	0	0	0	0	9.15443E-08	0	0	0	0	1.00925E-11	1.00925E-11	1.009E-05
3967753767739	396775	3767739	0	0	0	0	0	0	9.23137E-08	0	0	0	0	1.01774E-11	1.01774E-11	1.018E-05
3968253767739	396825	3767739	0	0	0	0	0	0	9.75158E-08	0	0	0	0	1.07509E-11	1.07509E-11	1.075E-05
3968753767739	396875	3767739	0	0	0	0	0	0	1.00356E-07	0	0	0	0	1.1064E-11	1.1064E-11	1.106E-05
3969253767739	396925	3767739	0	0	0	0	0	0	1.00079E-07	0	0	0	0	1.10335E-11	1.10335E-11	1.103E-05
3969753767739	396975	3767739	0	0	0	0	0	0	9.94142E-08	0	0	0	0	1.09602E-11	1.09602E-11	1.096E-05
3970253767739	397025	3767739	0	0	0	0	0	0	9.89956E-08	0	0	0	0	1.0914E-11	1.0914E-11	1.091E-05
3970753767739	397075	3767739	0	0	0	0	0	0	9.95011E-08	0	0	0	0	1.09698E-11	1.09698E-11	1.097E-05
3971253767739	397125	3767739	0	0	0	0	0	0	9.96226E-08	0	0	0	0	1.09832E-11	1.09832E-11	1.098E-05
3971753767739	397175	3767739	0	0	0	0	0	0	9.83126E-08	0	0	0	0	1.08387E-11	1.08387E-11	1.084E-05
3972253767739	397225	3767739	0	0	0	0	0	0	9.62264E-08	0	0	0	0	1.06087E-11	1.06087E-11	1.061E-05
3972753767739	397275	3767739	0	0	0	0	0	0	9.0753E-08	0	0	0	0	1.00053E-11	1.00053E-11	1.001E-05
3973253767739	397325	3767739	0	0	0	0	0	0	9.07893E-08	0	0	0	0	1.00093E-11	1.00093E-11	1.001E-05
3973753767739	397375	3767739	0	0	0	0	0	0	9.04884E-08	0	0	0	0	9.97614E-12	9.97614E-12	9.976E-06
3974253767739	397425	3767739	0	0	0	0	0	0	8.80578E-08	0	0	0	0	9.70817E-12	9.70817E-12	9.708E-06
3974753767739	397475	3767739	0	0	0	0	0	0	7.77992E-08	0	0	0	0	8.57718E-12	8.57718E-12	8.577E-06
3975253767739	397525	3767739	0	0	0	0	0	0	7.52087E-08	0	0	0	0	8.29159E-12	8.29159E-12	8.292E-06
3964253767789	396425	3767789	0	0	0	0	0	0	9.69611E-08	0	0	0	0	1.06897E-11	1.06897E-11	1.069E-05
3964753767789	396475	3767789	0	0	0	0	0	0	9.3413E-08	0	0	0	0	1.02986E-11	1.02986E-11	1.03E-05
3965253767789	396525	3767789	0	0	0	0	0	0	8.84707E-08	0	0	0	0	9.7537E-12	9.7537E-12	9.754E-06
3965753767789	396575	3767789	0	0	0	0	0	0	8.95415E-08	0	0	0	0	9.87175E-12	9.87175E-12	9.872E-06
3966253767789	396625	3767789	0	0	0	0	0	0	9.1899E-08	0	0	0	0	1.01317E-11	1.01317E-11	1.013E-05

Garvey Reservoir Rehab - Mitigated Standby Generator			Demolition - 2025	Demolition - 2026	Site Preparation - 2025	te Preparation - 202	Grading - 2025	Grading - 2026	Infrastructure - 2025	nfrastructure - 2026	Paving - 2025	rchitectural Coating - 202	Child Risk			
Unique Identifier	X (UTM)	Y (UTM)	2025	1900	2025	2026	2026	1900	2026	1900	2026	1900	3rd Trimester	0<2	Total	per million
3966753767789	396675	3767789	0	0	0	0	0	0	9.46584E-08	0	0	0	0	1.04359E-11	1.04359E-11	1.044E-05
3967253767789	396725	3767789	0	0	0	0	0	0	1.02105E-07	0	0	0	0	1.12569E-11	1.12569E-11	1.126E-05
3967753767789	396775	3767789	0	0	0	0	0	0	1.04588E-07	0	0	0	0	1.15306E-11	1.15306E-11	1.153E-05
3968253767789	396825	3767789	0	0	0	0	0	0	1.09274E-07	0	0	0	0	1.20472E-11	1.20472E-11	1.205E-05
3968753767789	396875	3767789	0	0	0	0	0	0	1.10835E-07	0	0	0	0	1.22193E-11	1.22193E-11	1.222E-05
3969253767789	396925	3767789	0	0	0	0	0	0	1.10785E-07	0	0	0	0	1.22138E-11	1.22138E-11	1.221E-05
3969753767789	396975	3767789	0	0	0	0	0	0	1.09421E-07	0	0	0	0	1.20635E-11	1.20635E-11	1.206E-05
3970253767789	397025	3767789	0	0	0	0	0	0	1.0881E-07	0	0	0	0	1.1996E-11	1.1996E-11	1.2E-05
3970753767789	397075	3767789	0	0	0	0	0	0	1.09829E-07	0	0	0	0	1.21084E-11	1.21084E-11	1.211E-05
3971253767789	397125	3767789	0	0	0	0	0	0	1.10623E-07	0	0	0	0	1.21959E-11	1.21959E-11	1.22E-05
3971753767789	397175	3767789	0	0	0	0	0	0	1.10126E-07	0	0	0	0	1.21411E-11	1.21411E-11	1.214E-05
3972253767789	397225	3767789	0	0	0	0	0	0	1.08747E-07	0	0	0	0	1.19891E-11	1.19891E-11	1.199E-05
3972753767789	397275	3767789	0	0	0	0	0	0	1.02727E-07	0	0	0	0	1.13255E-11	1.13255E-11	1.133E-05
3973253767789	397325	3767789	0	0	0	0	0	0	1.00232E-07	0	0	0	0	1.10503E-11	1.10503E-11	1.105E-05
3973753767789	397375	3767789	0	0	0	0	0	0	1.00552E-07	0	0	0	0	1.10856E-11	1.10856E-11	1.109E-05
3974253767789	397425	3767789	0	0	0	0	0	0	9.8493E-08	0	0	0	0	1.08586E-11	1.08586E-11	1.086E-05
3974753767789	397475	3767789	0	0	0	0	0	0	8.58282E-08	0	0	0	0	9.46237E-12	9.46237E-12	9.462E-06
3975253767789	397525	3767789	0	0	0	0	0	0	8.32442E-08	0	0	0	0	9.17748E-12	9.17748E-12	9.177E-06
3964253767839	396425	3767839	0	0	0	0	0	0	1.0352E-07	0	0	0	0	1.14128E-11	1.14128E-11	1.141E-05
3964753767839	396475	3767839	0	0	0	0	0	0	1.02861E-07	0	0	0	0	1.13402E-11	1.13402E-11	1.134E-05
3965253767839	396525	3767839	0	0	0	0	0	0	9.32844E-08	0	0	0	0	1.02844E-11	1.02844E-11	1.028E-05
3965753767839	396575	3767839	0	0	0	0	0	0	9.5963E-08	0	0	0	0	1.05797E-11	1.05797E-11	1.058E-05
3966253767839	396625	3767839	0	0	0	0	0	0	9.88542E-08	0	0	0	0	1.08984E-11	1.08984E-11	1.09E-05
3966753767839	396675	3767839	0	0	0	0	0	0	1.10261E-07	0	0	0	0	1.21561E-11	1.21561E-11	1.216E-05
3967253767839	396725	3767839	0	0	0	0	0	0	1.15507E-07	0	0	0	0	1.27344E-11	1.27344E-11	1.273E-05
3967753767839	396775	3767839	0	0	0	0	0	0	1.18535E-07	0	0	0	0	1.30682E-11	1.30682E-11	1.307E-05
3968253767839	396825	3767839	0	0	0	0	0	0	1.21489E-07	0	0	0	0	1.33939E-11	1.33939E-11	1.339E-05
3968753767839	396875	3767839	0	0	0	0	0	0	1.22916E-07	0	0	0	0	1.35512E-11	1.35512E-11	1.355E-05
3969253767839	396925	3767839	0	0	0	0	0	0	1.23286E-07	0	0	0	0	1.3592E-11	1.3592E-11	1.359E-05
3969753767839	396975	3767839	0	0	0	0	0	0	1.22016E-07	0	0	0	0	1.3452E-11	1.3452E-11	1.345E-05
3970253767839	397025	3767839	0	0	0	0	0	0	1.21042E-07	0	0	0	0	1.33447E-11	1.33447E-11	1.334E-05
3970753767839	397075	3767839	0	0	0	0	0	0	1.23654E-07	0	0	0	0	1.36326E-11	1.36326E-11	1.363E-05
3971253767839	397125	3767839	0	0	0	0	0	0	1.25927E-07	0	0	0	0	1.38832E-11	1.38832E-11	1.388E-05
3971753767839	397175	3767839	0	0	0	0	0	0	1.24263E-07	0	0	0	0	1.36997E-11	1.36997E-11	1.37E-05
3972253767839	397225	3767839	0	0	0	0	0	0	1.19468E-07	0	0	0	0	1.31711E-11	1.31711E-11	1.317E-05
3972753767839	397275	3767839	0	0	0	0	0	0	1.13171E-07	0	0	0	0	1.24769E-11	1.24769E-11	1.248E-05
3973253767839	397325	3767839	0	0	0	0	0	0	1.07894E-07	0	0	0	0	1.1895E-11	1.1895E-11	1.19E-05
3973753767839	397375	3767839	0	0	0	0	0	0	1.12239E-07	0	0	0	0	1.23741E-11	1.23741E-11	1.237E-05
3974753767839	397475	3767839	0	0	0	0	0	0	1.05798E-07	0	0	0	0	1.1664E-11	1.1664E-11	1.166E-05
3975253767839	397525	3767839	0	0	0	0	0	0	9.04213E-08	0	0	0	0	9.96874E-12	9.96874E-12	9.969E-06
3964253767889	396425	3767889	0	0	0	0	0	0	1.09465E-07	0	0	0	0	1.20682E-11	1.20682E-11	1.207E-05
3964753767889	396475	3767889	0	0	0	0	0	0	9.73195E-08	0	0	0	0	1.07293E-11	1.07293E-11	1.073E-05
3965253767889	396525	3767889	0	0	0	0	0	0	9.98772E-08	0	0	0	0	1.10112E-11	1.10112E-11	1.101E-05
3965753767889	396575	3767889	0	0	0	0	0	0	1.04401E-07	0	0	0	0	1.15099E-11	1.15099E-11	1.151E-05
3974753767889	397475	3767889	0	0	0	0	0	0	1.14784E-07	0	0	0	0	1.26547E-11	1.26547E-11	1.265E-05
3975253767889	397525	3767889	0	0	0	0	0	0	9.97465E-08	0	0	0	0	1.09968E-11	1.09968E-11	1.1E-05
3964253767939	396425	3767939	0	0	0	0	0	0	1.16207E-07	0	0	0	0	1.28116E-11	1.28116E-11	1.281E-05
3964753767939	396475	3767939	0	0	0	0	0	0	1.04453E-07	0	0	0	0	1.15157E-11	1.15157E-11	1.152E-05
3965253767939	396525	3767939	0	0	0	0	0	0	1.08194E-07	0	0	0	0	1.19282E-11	1.19282E-11	1.193E-05
3974753767939	397475	3767939	0	0	0	0	0	0	1.21961E-07	0	0	0	0	1.3446E-11	1.3446E-11	1.345E-05
3975253767939	397525	3767939	0	0	0	0	0	0	1.1149E-07	0	0	0	0	1.22915E-11	1.22915E-11	1.229E-05
3964253767989	396425	3767989	0	0	0	0	0	0	1.14007E-07	0	0	0	0	1.2569E-11	1.2569E-11	1.257E-05
3964753767989	396475	3767989	0	0	0	0	0	0	1.13513E-07	0	0	0	0	1.25146E-11	1.25146E-11	1.251E-05
3974753767989	397475	3767989	0	0	0	0	0	0	1.40162E-07	0	0	0	0	1.54525E-11	1.54525E-11	1.545E-05
3975253767989	397525	3767989	0	0	0	0	0	0	1.27033E-07	0	0	0	0	1.40051E-11	1.40051E-11	1.401E-05
3964253768039	396425	3768039	0	0	0	0	0	0	1.22905E-07	0	0	0	0	1.355E-11	1.355E-11	1.355E-05
3964753768039	396475	3768039	0	0	0	0	0	0	1.26995E-07	0	0	0	0	1.40009E-11	1.40009E-11	1.4E-05
3974753768039	397475	3768039	0	0	0	0	0	0	1.87124E-07	0	0	0	0	2.063E-11	2.063E-11	2.063E-05
3975253768039	397525	3768039	0	0	0	0	0	0	1.75103E-07	0	0	0	0	1.93047E-11	1.93047E-11	1.93E-05
3964253768089	396425	3768089	0	0	0	0	0	0	1.35536E-07	0	0	0	0	1.49425E-11	1.49425E-11	1.494E-05
3964753768089	396475	3768089	0	0	0	0	0	0	1.42454E-07	0	0	0	0	1.57052E-11	1.57052E-11	1.571E-05
3974753768089	397475	3768089	0	0	0	0	0	0	2.51867E-07	0	0	0	0	2.77678E-11	2.77678E-11	2.777E-05
3975253768089	397525	3768089	0	0	0	0	0	0	2.31961E-07	0	0	0	0	2.55732E-11	2.55732E-11	2.557E-05
3964253768139	396425	3768139	0	0	0	0	0	0	1.6877E-07	0	0	0	0	1.86065E-11	1.86065E-11	1.861E-05
3964753768139	396475	3768139	0	0	0	0	0	0	1.55458E-07	0	0	0	0	1.71389E-11	1.71389E-11	1.714E-05
3974253768139	397425	3768139	0	0	0	0	0	0	5.34334E-07	0	0	0	0	5.89091E-11	5.89091E-11	5.891E-05
3974753768139	397475	3768139	0	0	0	0	0	0	3.87108E-07	0	0	0	0	4.26777E-11	4.26777E-11	4.268E-05
3975253768139	397525	3768139	0	0	0	0	0	0	2.92081E-07	0	0	0	0	3.22013E-11	3.22013E-11	3.22E-05
3964253768189	396425	3768189	0	0	0	0	0	0	1.81825E-07	0	0	0	0	2.00457E-11	2.00457E-11	2.005E-05
3964753768189	396475	3768189	0	0	0	0	0	0	1.70179E-07	0	0	0	0	1.87619E-11	1.87619E-11	1.876E-05
3973753768189	397375	3768189	0	0	0	0	0	0	3.16724E-06	0	0	0	0	3.49181E-10	3.49181E-10	0.0003492

Garvey Reservoir Rehab - Mitigated Standby Generator			Demolition - 2025	Demolition - 2026	Site Preparation - 2025	te Preparation - 202	Grading - 2025	Grading - 2026	Infrastructure - 2025	nfrastructure - 2026	Paving - 2025	rchitectural Coating - 202	Child Risk			
Unique Identifier	X (UTM)	Y (UTM)	2025	1900	2025	2026	2026	1900	2026	1900	2026	1900	3rd Trimester	0<2	Total	per million
3974253768189	397425	3768189	0	0	0	0	0	0	9.14856E-07	0	0	0	0	1.00861E-10	1.00861E-10	0.0001009
3974753768189	397475	3768189	0	0	0	0	0	0	5.24195E-07	0	0	0	0	5.77913E-11	5.77913E-11	5.779E-05
3975253768189	397525	3768189	0	0	0	0	0	0	3.60921E-07	0	0	0	0	3.97907E-11	3.97907E-11	3.979E-05
3964253768239	396425	3768239	0	0	0	0	0	0	1.96791E-07	0	0	0	0	2.16958E-11	2.16958E-11	2.17E-05
3964753768239	396475	3768239	0	0	0	0	0	0	1.88175E-07	0	0	0	0	2.07458E-11	2.07458E-11	2.075E-05
3973753768239	397375	3768239	0	0	0	0	0	0	4.61395E-06	0	0	0	0	5.08677E-10	5.08677E-10	0.0005087
3974253768239	397425	3768239	0	0	0	0	0	0	1.17331E-06	0	0	0	0	1.29354E-10	1.29354E-10	0.0001294
3974753768239	397475	3768239	0	0	0	0	0	0	6.32611E-07	0	0	0	0	6.97439E-11	6.97439E-11	6.974E-05
3975253768239	397525	3768239	0	0	0	0	0	0	4.29129E-07	0	0	0	0	4.73104E-11	4.73104E-11	4.731E-05
3964253768289	396425	3768289	0	0	0	0	0	0	2.10651E-07	0	0	0	0	2.32238E-11	2.32238E-11	2.322E-05
3964753768289	396475	3768289	0	0	0	0	0	0	2.09652E-07	0	0	0	0	2.31137E-11	2.31137E-11	2.311E-05
3973253768289	397325	3768289	0	0	0	0	0	0	1.22233E-05	0	0	0	0	1.34759E-09	1.34759E-09	0.0013476
3973753768289	397375	3768289	0	0	0	0	0	0	3.23571E-06	0	0	0	0	3.56729E-10	3.56729E-10	0.0003567
3974253768289	397425	3768289	0	0	0	0	0	0	1.42608E-06	0	0	0	0	1.57223E-10	1.57223E-10	0.0001572
3974753768289	397475	3768289	0	0	0	0	0	0	7.86182E-07	0	0	0	0	8.66747E-11	8.66747E-11	8.667E-05
3975253768289	397525	3768289	0	0	0	0	0	0	5.10114E-07	0	0	0	0	5.62389E-11	5.62389E-11	5.624E-05
3964253768339	396425	3768339	0	0	0	0	0	0	2.38691E-07	0	0	0	0	2.63151E-11	2.63151E-11	2.632E-05
3964753768339	396475	3768339	0	0	0	0	0	0	2.3691E-07	0	0	0	0	2.61188E-11	2.61188E-11	2.612E-05
3965253768339	396525	3768339	0	0	0	0	0	0	2.52547E-07	0	0	0	0	2.78427E-11	2.78427E-11	2.784E-05
3972753768339	397275	3768339	0	0	0	0	0	0	9.93064E-06	0	0	0	0	1.09483E-09	1.09483E-09	0.0010948
3973253768339	397325	3768339	0	0	0	0	0	0	7.32089E-06	0	0	0	0	8.07111E-10	8.07111E-10	0.0008071
3973753768339	397375	3768339	0	0	0	0	0	0	2.6966E-06	0	0	0	0	2.97294E-10	2.97294E-10	0.0002973
3974253768339	397425	3768339	0	0	0	0	0	0	1.41789E-06	0	0	0	0	1.56319E-10	1.56319E-10	0.0001563
3974753768339	397475	3768339	0	0	0	0	0	0	8.52659E-07	0	0	0	0	9.40037E-11	9.40037E-11	9.4E-05
3975253768339	397525	3768339	0	0	0	0	0	0	5.66484E-07	0	0	0	0	6.24535E-11	6.24535E-11	6.245E-05
3964253768389	396425	3768389	0	0	0	0	0	0	2.65247E-07	0	0	0	0	2.92428E-11	2.92428E-11	2.924E-05
3964753768389	396475	3768389	0	0	0	0	0	0	2.69992E-07	0	0	0	0	2.9766E-11	2.9766E-11	2.977E-05
3965253768389	396525	3768389	0	0	0	0	0	0	2.82988E-07	0	0	0	0	3.11988E-11	3.11988E-11	3.12E-05
3972253768389	397225	3768389	0	0	0	0	0	0	2.38731E-06	0	0	0	0	2.63195E-10	2.63195E-10	0.0002632
3972753768389	397275	3768389	0	0	0	0	0	0	9.45567E-06	0	0	0	0	1.04247E-09	1.04247E-09	0.0010425
3973253768389	397325	3768389	0	0	0	0	0	0	7.32333E-06	0	0	0	0	8.07381E-10	8.07381E-10	0.0008074
3973753768389	397375	3768389	0	0	0	0	0	0	2.59588E-06	0	0	0	0	2.8619E-10	2.8619E-10	0.0002862
3974253768389	397425	3768389	0	0	0	0	0	0	1.42028E-06	0	0	0	0	1.56583E-10	1.56583E-10	0.0001566
3974753768389	397475	3768389	0	0	0	0	0	0	8.98111E-07	0	0	0	0	9.90147E-11	9.90147E-11	9.901E-05
3975253768389	397525	3768389	0	0	0	0	0	0	6.16887E-07	0	0	0	0	6.80104E-11	6.80104E-11	6.801E-05
3964253768439	396425	3768439	0	0	0	0	0	0	3.01042E-07	0	0	0	0	3.31892E-11	3.31892E-11	3.319E-05
3964753768439	396475	3768439	0	0	0	0	0	0	3.10017E-07	0	0	0	0	3.41787E-11	3.41787E-11	3.418E-05
3965253768439	396525	3768439	0	0	0	0	0	0	3.21193E-07	0	0	0	0	3.54108E-11	3.54108E-11	3.541E-05
3971753768439	397175	3768439	0	0	0	0	0	0	1.28612E-06	0	0	0	0	1.41792E-10	1.41792E-10	0.0001418
3972253768439	397225	3768439	0	0	0	0	0	0	2.50443E-06	0	0	0	0	2.76107E-10	2.76107E-10	0.0002761
3972753768439	397275	3768439	0	0	0	0	0	0	9.50244E-06	0	0	0	0	1.04762E-09	1.04762E-09	0.0010476
3973253768439	397325	3768439	0	0	0	0	0	0	7.1501E-06	0	0	0	0	7.88283E-10	7.88283E-10	0.0007883
3973753768439	397375	3768439	0	0	0	0	0	0	2.39955E-06	0	0	0	0	2.64545E-10	2.64545E-10	0.0002645
3974253768439	397425	3768439	0	0	0	0	0	0	1.31306E-06	0	0	0	0	1.44762E-10	1.44762E-10	0.0001448
3974753768439	397475	3768439	0	0	0	0	0	0	9.29808E-07	0	0	0	0	1.02509E-10	1.02509E-10	0.0001025
3975253768439	397525	3768439	0	0	0	0	0	0	6.52985E-07	0	0	0	0	7.19901E-11	7.19901E-11	7.199E-05
3964253768489	396425	3768489	0	0	0	0	0	0	3.43383E-07	0	0	0	0	3.78572E-11	3.78572E-11	3.786E-05
3964753768489	396475	3768489	0	0	0	0	0	0	3.58047E-07	0	0	0	0	3.94738E-11	3.94738E-11	3.947E-05
3965253768489	396525	3768489	0	0	0	0	0	0	3.7197E-07	0	0	0	0	4.10089E-11	4.10089E-11	4.101E-05
3970753768489	397075	3768489	0	0	0	0	0	0	7.32546E-07	0	0	0	0	8.07616E-11	8.07616E-11	8.076E-05
3971253768489	397125	3768489	0	0	0	0	0	0	9.30641E-07	0	0	0	0	1.02601E-10	1.02601E-10	0.0001026
3971753768489	397175	3768489	0	0	0	0	0	0	1.34596E-06	0	0	0	0	1.48389E-10	1.48389E-10	0.0001484
3972253768489	397225	3768489	0	0	0	0	0	0	2.48988E-06	0	0	0	0	2.74503E-10	2.74503E-10	0.0002745
3972753768489	397275	3768489	0	0	0	0	0	0	9.32927E-06	0	0	0	0	1.02853E-09	1.02853E-09	0.0010285
3973253768489	397325	3768489	0	0	0	0	0	0	6.17087E-06	0	0	0	0	6.80324E-10	6.80324E-10	0.0006803
3973753768489	397375	3768489	0	0	0	0	0	0	2.36365E-06	0	0	0	0	2.60587E-10	2.60587E-10	0.0002606
3974253768489	397425	3768489	0	0	0	0	0	0	1.30462E-06	0	0	0	0	1.43831E-10	1.43831E-10	0.0001438
3974753768489	397475	3768489	0	0	0	0	0	0	8.13122E-07	0	0	0	0	8.96448E-11	8.96448E-11	8.964E-05
3975253768489	397525	3768489	0	0	0	0	0	0	5.89061E-07	0	0	0	0	6.49427E-11	6.49427E-11	6.494E-05
3964253768539	396425	3768539	0	0	0	0	0	0	3.99334E-07	0	0	0	0	4.40256E-11	4.40256E-11	4.403E-05
3964753768539	396475	3768539	0	0	0	0	0	0	4.21103E-07	0	0	0	0	4.64257E-11	4.64257E-11	4.643E-05
3965253768539	396525	3768539	0	0	0	0	0	0	4.3514E-07	0	0	0	0	4.79732E-11	4.79732E-11	4.797E-05
3965753768539	396575	3768539	0	0	0	0	0	0	4.18776E-07	0	0	0	0	4.61691E-11	4.61691E-11	4.617E-05
3970253768539	397025	3768539	0	0	0	0	0	0	6.92943E-07	0	0	0	0	7.63954E-11	7.63954E-11	7.64E-05
3970753768539	397075	3768539	0	0	0	0	0	0	8.10826E-07	0	0	0	0	8.93917E-11	8.93917E-11	8.939E-05
3971253768539	397125	3768539	0	0	0	0	0	0	1.0188E-06	0	0	0	0	1.12321E-10	1.12321E-10	0.0001123
3971753768539	397175	3768539	0	0	0	0	0	0	1.45466E-06	0	0	0	0	1.60373E-10	1.60373E-10	0.0001604
3972253768539	397225	3768539	0	0	0	0	0	0	2.55131E-06	0	0	0	0	2.81276E-10	2.81276E-10	0.0002813
3972753768539	397275	3768539	0	0	0	0	0	0	8.49806E-06	0	0	0	0	9.36891E-10	9.36891E-10	0.0009369
3973253768539	397325	3768539	0	0	0	0	0	0	5.95109E-06	0	0	0	0	6.56094E-10	6.56094E-10	0.0006561
3973753768539	397375	3768539	0	0	0	0	0	0	2.38068E-06	0	0	0	0	2.62465E-10	2.62465E-10	0.0002625

Garvey Reservoir Rehab - Mitigated Standby Generator			Demolition - 2025	Demolition - 2026	Site Preparation - 2025	ite Preparation - 202	Grading - 2025	Grading - 2026	Infrastructure - 2025	nfrastructure - 2026	Paving - 2025	rchitectural Coating - 202	Child Risk			
Unique Identifier	X (UTM)	Y (UTM)	2025	1900	2025	2026	2026	1900	2026	1900	2026	1900	3rd Trimester	0<2	Total	per million
3974253768539	397425	3768539	0	0	0	0	0	0	1.27506E-06	0	0	0	0	1.40572E-10	1.40572E-10	0.0001406
3974753768539	397475	3768539	0	0	0	0	0	0	8.22485E-07	0	0	0	0	9.06771E-11	9.06771E-11	9.068E-05
3975253768539	397525	3768539	0	0	0	0	0	0	5.85696E-07	0	0	0	0	6.45716E-11	6.45716E-11	6.457E-05
3964253768589	396425	3768589	0	0	0	0	0	0	4.66023E-07	0	0	0	0	5.1378E-11	5.1378E-11	5.138E-05
3964753768589	396475	3768589	0	0	0	0	0	0	5.05701E-07	0	0	0	0	5.57524E-11	5.57524E-11	5.575E-05
3965253768589	396525	3768589	0	0	0	0	0	0	5.03894E-07	0	0	0	0	5.55532E-11	5.55532E-11	5.555E-05
3965753768589	396575	3768589	0	0	0	0	0	0	4.86158E-07	0	0	0	0	5.35978E-11	5.35978E-11	5.36E-05
3966253768589	396625	3768589	0	0	0	0	0	0	4.80616E-07	0	0	0	0	5.29868E-11	5.29868E-11	5.299E-05
3968253768589	396825	3768589	0	0	0	0	0	0	5.92152E-07	0	0	0	0	6.52834E-11	6.52834E-11	6.528E-05
3968753768589	396875	3768589	0	0	0	0	0	0	6.27671E-07	0	0	0	0	6.91993E-11	6.91993E-11	6.92E-05
3969253768589	396925	3768589	0	0	0	0	0	0	6.81768E-07	0	0	0	0	7.51634E-11	7.51634E-11	7.516E-05
3969753768589	396975	3768589	0	0	0	0	0	0	7.31863E-07	0	0	0	0	8.06862E-11	8.06862E-11	8.069E-05
3970253768589	397025	3768589	0	0	0	0	0	0	8.05111E-07	0	0	0	0	8.87616E-11	8.87616E-11	8.876E-05
3970753768589	397075	3768589	0	0	0	0	0	0	9.14589E-07	0	0	0	0	1.00831E-10	1.00831E-10	0.0001008
3971253768589	397125	3768589	0	0	0	0	0	0	1.14892E-06	0	0	0	0	1.26666E-10	1.26666E-10	0.0001267
3971753768589	397175	3768589	0	0	0	0	0	0	1.62855E-06	0	0	0	0	1.79544E-10	1.79544E-10	0.0001795
3972253768589	397225	3768589	0	0	0	0	0	0	2.84832E-06	0	0	0	0	3.1402E-10	3.1402E-10	0.000314
3972753768589	397275	3768589	0	0	0	0	0	0	9.07695E-06	0	0	0	0	1.00071E-09	1.00071E-09	0.0010007
3973253768589	397325	3768589	0	0	0	0	0	0	5.91009E-06	0	0	0	0	6.51574E-10	6.51574E-10	0.0006516
3973753768589	397375	3768589	0	0	0	0	0	0	2.38013E-06	0	0	0	0	2.62404E-10	2.62404E-10	0.0002624
3974253768589	397425	3768589	0	0	0	0	0	0	1.23782E-06	0	0	0	0	1.36467E-10	1.36467E-10	0.0001365
3974753768589	397475	3768589	0	0	0	0	0	0	8.16547E-07	0	0	0	0	9.00224E-11	9.00224E-11	9.002E-05
3975253768589	397525	3768589	0	0	0	0	0	0	5.90625E-07	0	0	0	0	6.5115E-11	6.5115E-11	6.512E-05
3964253768639	396425	3768639	0	0	0	0	0	0	5.61717E-07	0	0	0	0	6.1928E-11	6.1928E-11	6.193E-05
3964753768639	396475	3768639	0	0	0	0	0	0	6.36065E-07	0	0	0	0	7.01247E-11	7.01247E-11	7.012E-05
3965253768639	396525	3768639	0	0	0	0	0	0	5.97717E-07	0	0	0	0	6.58969E-11	6.58969E-11	6.59E-05
3965753768639	396575	3768639	0	0	0	0	0	0	6.01335E-07	0	0	0	0	6.62958E-11	6.62958E-11	6.63E-05
3966253768639	396625	3768639	0	0	0	0	0	0	6.1207E-07	0	0	0	0	6.74793E-11	6.74793E-11	6.748E-05
3966753768639	396675	3768639	0	0	0	0	0	0	6.24843E-07	0	0	0	0	6.88874E-11	6.88874E-11	6.889E-05
3967253768639	396725	3768639	0	0	0	0	0	0	6.44125E-07	0	0	0	0	7.10133E-11	7.10133E-11	7.101E-05
3967753768639	396775	3768639	0	0	0	0	0	0	6.79063E-07	0	0	0	0	7.48651E-11	7.48651E-11	7.487E-05
3968253768639	396825	3768639	0	0	0	0	0	0	7.12615E-07	0	0	0	0	7.85642E-11	7.85642E-11	7.856E-05
3968753768639	396875	3768639	0	0	0	0	0	0	7.64108E-07	0	0	0	0	8.42411E-11	8.42411E-11	8.424E-05
3969253768639	396925	3768639	0	0	0	0	0	0	8.22071E-07	0	0	0	0	9.06314E-11	9.06314E-11	9.063E-05
3969753768639	396975	3768639	0	0	0	0	0	0	8.73162E-07	0	0	0	0	9.62641E-11	9.62641E-11	9.626E-05
3970253768639	397025	3768639	0	0	0	0	0	0	9.42057E-07	0	0	0	0	1.0386E-10	1.0386E-10	0.0001039
3970753768639	397075	3768639	0	0	0	0	0	0	1.04547E-06	0	0	0	0	1.1526E-10	1.1526E-10	0.0001153
3971253768639	397125	3768639	0	0	0	0	0	0	1.2571E-06	0	0	0	0	1.38593E-10	1.38593E-10	0.0001386
3971753768639	397175	3768639	0	0	0	0	0	0	1.8391E-06	0	0	0	0	2.02757E-10	2.02757E-10	0.0002028
3972253768639	397225	3768639	0	0	0	0	0	0	3.62446E-06	0	0	0	0	3.99588E-10	3.99588E-10	0.0003996
3972753768639	397275	3768639	0	0	0	0	0	0	1.26254E-05	0	0	0	0	1.39192E-09	1.39192E-09	0.0013919
3973253768639	397325	3768639	0	0	0	0	0	0	5.3237E-06	0	0	0	0	5.86925E-10	5.86925E-10	0.0005869
3973753768639	397375	3768639	0	0	0	0	0	0	2.34555E-06	0	0	0	0	2.58592E-10	2.58592E-10	0.0002586
3974253768639	397425	3768639	0	0	0	0	0	0	1.36722E-06	0	0	0	0	1.50733E-10	1.50733E-10	0.0001507
3974753768639	397475	3768639	0	0	0	0	0	0	8.11605E-07	0	0	0	0	8.94776E-11	8.94776E-11	8.948E-05
3975253768639	397525	3768639	0	0	0	0	0	0	5.96383E-07	0	0	0	0	6.57499E-11	6.57499E-11	6.575E-05
3964253768689	396425	3768689	0	0	0	0	0	0	7.24038E-07	0	0	0	0	7.98236E-11	7.98236E-11	7.982E-05
3964753768689	396475	3768689	0	0	0	0	0	0	8.58881E-07	0	0	0	0	9.46896E-11	9.46896E-11	9.469E-05
3965253768689	396525	3768689	0	0	0	0	0	0	8.91452E-07	0	0	0	0	9.82805E-11	9.82805E-11	9.828E-05
3965753768689	396575	3768689	0	0	0	0	0	0	8.76162E-07	0	0	0	0	9.65948E-11	9.65948E-11	9.659E-05
3966253768689	396625	3768689	0	0	0	0	0	0	8.86462E-07	0	0	0	0	9.77304E-11	9.77304E-11	9.773E-05
3966753768689	396675	3768689	0	0	0	0	0	0	8.80542E-07	0	0	0	0	9.70778E-11	9.70778E-11	9.708E-05
3967253768689	396725	3768689	0	0	0	0	0	0	8.95219E-07	0	0	0	0	9.86958E-11	9.86958E-11	9.87E-05
3967753768689	396775	3768689	0	0	0	0	0	0	9.08079E-07	0	0	0	0	1.00114E-10	1.00114E-10	0.0001001
3968253768689	396825	3768689	0	0	0	0	0	0	9.5723E-07	0	0	0	0	1.05532E-10	1.05532E-10	0.0001055
3968753768689	396875	3768689	0	0	0	0	0	0	1.00822E-06	0	0	0	0	1.11154E-10	1.11154E-10	0.0001112
3969253768689	396925	3768689	0	0	0	0	0	0	1.05176E-06	0	0	0	0	1.15954E-10	1.15954E-10	0.000116
3969753768689	396975	3768689	0	0	0	0	0	0	1.09665E-06	0	0	0	0	1.20903E-10	1.20903E-10	0.0001209
3970253768689	397025	3768689	0	0	0	0	0	0	1.15927E-06	0	0	0	0	1.27807E-10	1.27807E-10	0.0001278
3970753768689	397075	3768689	0	0	0	0	0	0	1.27162E-06	0	0	0	0	1.40193E-10	1.40193E-10	0.0001402
3971253768689	397125	3768689	0	0	0	0	0	0	1.48498E-06	0	0	0	0	1.63715E-10	1.63715E-10	0.0001637
3971753768689	397175	3768689	0	0	0	0	0	0	2.07075E-06	0	0	0	0	2.28295E-10	2.28295E-10	0.0002283
3972253768689	397225	3768689	0	0	0	0	0	0	4.69595E-06	0	0	0	0	5.17718E-10	5.17718E-10	0.0005177
3972753768689	397275	3768689	0	0	0	0	0	0	1.28985E-05	0	0	0	0	1.42203E-09	1.42203E-09	0.001422
3973253768689	397325	3768689	0	0	0	0	0	0	4.31696E-06	0	0	0	0	4.75935E-10	4.75935E-10	0.0004759
3973753768689	397375	3768689	0	0	0	0	0	0	2.18547E-06	0	0	0	0	2.40943E-10	2.40943E-10	0.0002409
3974253768689	397425	3768689	0	0	0	0	0	0	1.36516E-06	0	0	0	0	1.50506E-10	1.50506E-10	0.0001505
3974753768689	397475	3768689	0	0	0	0	0	0	9.31649E-07	0	0	0	0	1.02712E-10	1.02712E-10	0.0001027
3975253768689	397525	3768689	0	0	0	0	0	0	6.76177E-07	0	0	0	0	7.45469E-11	7.45469E-11	7.455E-05

Garvey Reservoir Rehab - Mitigated Standby Generator

Maximum Individual Non-Cancer Impact Calculations - Sensitive Receptors (Maximum Impacted Senior Residential Receptor) (IMPACT AT ALL OTHER LOCATIONS ON THE PROJECT SITE WOULD BE LESS THAN SHOWN)

Maximum Non-cancer Chronic Hazards / Toxicological Endpoints*

Receptor Group	Pollutant	CREL[1]	CONC	WFrac	$CONC_{WF}$	HI		ALIM	BN	CVS	DEV	ENDC	EYE	HEM	IMMUN	KIDN	NS	REPRO	RESP	SK
Project:																				
MEI - Max	DPM	5.00E+00	1.91E-02	1.00E+00	1.91E-02	0.004		-	-	-	-	-	-	-	-	-	-	-	3.82E-03	-
							Total Risk				-			-				-	0.004	
							Threshold				1.00			1.00				1.00	1.00	
							Over?				NO			NO				NO	NO	

Notes:

1. California Air Resources Board, "Consolidated Table of OEHHA/ARB Approved Risk Assessment Health Values," "OEHHA/ARB Approved Chronic Reference Exposure Levels and Target Organs," "OEHHA/ARB Approved Acute Reference Exposure Levels and Target Organs," and "OEHHA/ARB Approved 8-Hour Reference Exposure Levels and Target Organs," http://www.arb.ca.gov/toxics/healthval/healthval.htm. Tables last updated: May 8, 2018. Downloaded: 08/14/18.

Source: ESA, 2020

Where:

$CONC_{WF}$	Pollutant Concentration ($\mu g/m^3$) multiplied by the weight fraction
CREL	Chronic Reference Exposure Level
HI	Hazard Index
MEI	Maximally Exposed Individual
WFrac	Weight fraction of speciated component

* Key to Toxicological Endpoints

ALIM	Alimentary Tract	EYE	Eye	NS	Nervous System
BN	Bone	HEM	Hematologic System	REPRO	Reproductive System
CVS	Cardiovascular System	IMMUN	Immune System	RESP	Respiratory System
DEV	Developmental System	KIDN	Kidney	SK	Skin
ENDC	Endocrine System				

Surge Tank Telemetry

Garvey Reservoir Rehab - Unmitigated Surge Tank Telemetry

Cancer Risk Summary & Maximum Annual GLC for Chronic Calculations

Cancer Risk Summary

Max Risk: 0.168405

XY	X	Y	Offroad Risk	Haul Risk	Total Risk
7449041451	574490	4145130	0.004701306	4.45911E-07	0.004702
7448041451	574480	4145140	0.005313219	4.5602E-07	0.005314
7449041451	574490	4145140	0.006271429	4.74567E-07	0.006272
7449041451	574490	4145150	0.007271341	4.86932E-07	0.007272
7450041451	574500	4145150	0.008542307	5.3381E-07	0.008543
7446041451	574460	4145160	0.009453378	5.04688E-07	0.009454
7449041451	574490	4145160	0.010095206	5.02709E-07	0.010096
7450041451	574500	4145160	0.010692615	5.03149E-07	0.010693
7451041451	574510	4145160	0.011450481	5.09807E-07	0.011451
7446041451	574460	4145170	0.011857516	4.9695E-07	0.011858
7447041451	574470	4145170	0.011567424	4.90153E-07	0.011568
7448041451	574480	4145170	0.010785988	4.90744E-07	0.010786
7449041451	574490	4145170	0.010283766	4.68374E-07	0.010284
7450041451	574500	4145170	0.009565788	4.21658E-07	0.009566
7451041451	574510	4145170	0.008455279	4.14756E-07	0.008456
7452041451	574520	4145170	0.007403695	4.02581E-07	0.007404
7446041451	574460	4145180	0.006252392	4.15479E-07	0.006253
7447041451	574470	4145180	0.005429256	3.95745E-07	0.00543
7448041451	574480	4145180	0.005063921	5.13143E-07	0.005064
7449041451	574490	4145180	0.005693965	5.01395E-07	0.005694
7450041451	574500	4145180	0.006909632	5.28234E-07	0.00691
7451041451	574510	4145180	0.008309327	5.78549E-07	0.00831
7452041451	574520	4145180	0.009903927	5.8641E-07	0.009905
7453041451	574530	4145180	0.011464985	5.69383E-07	0.011466
7445041451	574450	4145190	0.012981623	5.73837E-07	0.012982
7446041451	574460	4145190	0.014342337	5.77187E-07	0.014343
7447041451	574470	4145190	0.015759255	5.8578E-07	0.01576
7448041451	574480	4145190	0.016590551	5.74522E-07	0.016591
7449041451	574490	4145190	0.016304085	5.56428E-07	0.016305
7450041451	574500	4145190	0.015029492	5.58266E-07	0.01503
7451041451	574510	4145190	0.013662433	5.41472E-07	0.013663
7452041451	574520	4145190	0.012341607	4.88385E-07	0.012342
7444041452	574440	4145200	0.010595615	4.63164E-07	0.010596
7445041452	574450	4145200	0.008909455	4.53006E-07	0.00891
7446041452	574460	4145200	0.00748619	4.42247E-07	0.007487
7447041452	574470	4145200	0.006341233	4.25619E-07	0.006342
7448041452	574480	4145200	0.005267892	5.40918E-07	0.005268
7449041452	574490	4145200	0.006092841	5.56058E-07	0.006093
7450041452	574500	4145200	0.007365621	5.81563E-07	0.007366
7451041452	574510	4145200	0.00913337	6.17532E-07	0.009134
7443041452	574430	4145210	0.01147949	6.85972E-07	0.01148
7444041452	574440	4145210	0.014336897	6.96532E-07	0.014338
7445041452	574450	4145210	0.016595083	6.56811E-07	0.016596
7446041452	574460	4145210	0.020058058	6.73371E-07	0.020059
7447041452	574470	4145210	0.022846569	6.8258E-07	0.022847
7448041452	574480	4145210	0.024464739	6.82745E-07	0.024465
7449041452	574490	4145210	0.024579869	6.57553E-07	0.024581
7450041452	574500	4145210	0.022356132	6.48835E-07	0.022357
7451041452	574510	4145210	0.019223137	6.32665E-07	0.019224
7443041452	574430	4145220	0.016550663	5.63573E-07	0.016551
7444041452	574440	4145220	0.013445771	5.31586E-07	0.013446
7445041452	574450	4145220	0.010877549	5.02673E-07	0.010878
7446041452	574460	4145220	0.00882424	4.83564E-07	0.008825
7447041452	574470	4145220	0.007270434	4.59687E-07	0.007271
7448041452	574480	4145220	0.005528975	6.54933E-07	0.00553
7449041452	574490	4145220	0.006459989	6.19662E-07	0.006461
7450041452	574500	4145220	0.007950338	6.60307E-07	0.007951
7451041452	574510	4145220	0.010134188	7.81021E-07	0.010135
7452041452	574520	4145220	0.012958053	7.88105E-07	0.012959
7453041452	574530	4145220	0.016179889	7.3826E-07	0.016181
7444041452	574440	4145230	0.021635434	7.6855E-07	0.021636
7445041452	574450	4145230	0.029470642	8.11738E-07	0.029471

Max GLC for Chronic Calcs

Max GLC: 0.022704

XY	X	Y	2025	2026	2027	2034	2035
57449041451	574490	4145130	0.0006339	0	0		
57448041451	574480	4145140	0.0007164	0	0		
57449041451	574490	4145140	0.0008456	0	0		
57449041451	574490	4145150	0.0009804	0	0		
57450041451	574500	4145150	0.0011517	0	0		
57446041451	574460	4145160	0.0012745	0	0		
57449041451	574490	4145160	0.0013611	0	0		
57450041451	574500	4145160	0.0014416	0	0		
57451041451	574510	4145160	0.0015438	0	0		
57446041451	574460	4145170	0.0015987	0	0		
57447041451	574470	4145170	0.0015595	0	0		
57448041451	574480	4145170	0.0014542	0	0		
57449041451	574490	4145170	0.0013865	0	0		
57450041451	574500	4145170	0.0012897	0	0		
57451041451	574510	4145170	0.00114	0	0		
57452041451	574520	4145170	0.0009982	0	0		
57446041451	574460	4145180	0.000843	0	0		
57447041451	574470	4145180	0.000732	0	0		
57448041451	574480	4145180	0.0006828	0	0		
57449041451	574490	4145180	0.0007677	0	0		
57450041451	574500	4145180	0.0009316	0	0		
57451041451	574510	4145180	0.0011203	0	0		
57452041451	574520	4145180	0.0013353	0	0		
57453041451	574530	4145180	0.0015457	0	0		
57445041451	574450	4145190	0.0017502	0	0		
57446041451	574460	4145190	0.0019337	0	0		
57447041451	574470	4145190	0.0021247	0	0		
57448041451	574480	4145190	0.0022368	0	0		
57449041451	574490	4145190	0.0021981	0	0		
57450041451	574500	4145190	0.0020263	0	0		
57451041451	574510	4145190	0.001842	0	0		
57452041451	574520	4145190	0.0016639	0	0		
57444041452	574440	4145200	0.0014285	0	0		
57445041452	574450	4145200	0.0012012	0	0		
57446041452	574460	4145200	0.0010093	0	0		
57447041452	574470	4145200	0.000855	0	0		
57448041452	574480	4145200	0.0007103	0	0		
57449041452	574490	4145200	0.0008215	0	0		
57450041452	574500	4145200	0.0009931	0	0		
57451041452	574510	4145200	0.0012314	0	0		
57443041452	574430	4145210	0.0015477	0	0		
57444041452	574440	4145210	0.0019329	0	0		
57445041452	574450	4145210	0.0022374	0	0		
57446041452	574460	4145210	0.0027043	0	0		
57447041452	574470	4145210	0.0030802	0	0		
57448041452	574480	4145210	0.0032984	0	0		
57449041452	574490	4145210	0.0033139	0	0		
57450041452	574500	4145210	0.0030141	0	0		
57451041452	574510	4145210	0.0025917	0	0		
57443041452	574430	4145220	0.0022314	0	0		
57444041452	574440	4145220	0.0018128	0	0		
57445041452	574450	4145220	0.0014665	0	0		
57446041452	574460	4145220	0.0011897	0	0		
57447041452	574470	4145220	0.0009802	0	0		
57448041452	574480	4145220	0.0007455	0	0		
57449041452	574490	4145220	0.000871	0	0		
57450041452	574500	4145220	0.0010719	0	0		
57451041452	574510	4145220	0.0013664	0	0		
57452041452	574520	4145220	0.0017471	0	0		
57453041452	574530	4145220	0.0021814	0	0		
57444041452	574440	4145230	0.0029169	0	0		
57445041452	574450	4145230	0.0039733	0	0		

Garvey Reservoir Rehab - Unmitigated Surge Tank Telemetry

Cancer Risk Summary & Maximum Annual GLC for Chronic Calculations

Cancer Risk Summary

Max Risk: 0.168405

XY	X	Y	Offroad Risk	Haul Risk	Total Risk
7446041452	574460	4145230	0.037925014	8.20574E-07	0.037926
7447041452	574470	4145230	0.041804997	8.18104E-07	0.041806
7448041452	574480	4145230	0.041528503	8.00008E-07	0.041529
7449041452	574490	4145230	0.037940426	7.33645E-07	0.037941
7450041452	574500	4145230	0.029096241	7.46272E-07	0.029097
7451041452	574510	4145230	0.023146633	6.41834E-07	0.023147
7452041452	574520	4145230	0.017298557	6.15798E-07	0.017299
7444041452	574440	4145240	0.013185594	5.7992E-07	0.013186
7445041452	574450	4145240	0.010298271	5.41348E-07	0.010299
7446041452	574460	4145240	0.008189664	5.15171E-07	0.00819
7447041452	574470	4145240	0.005676741	7.35039E-07	0.005677
7448041452	574480	4145240	0.006886062	8.35004E-07	0.006887
7449041452	574490	4145240	0.00842355	8.12668E-07	0.008424
7450041452	574500	4145240	0.010726157	8.57962E-07	0.010727
7451041452	574510	4145240	0.013738582	8.12308E-07	0.013739
7445041452	574450	4145250	0.018668336	8.54301E-07	0.018669
7446041452	574460	4145250	0.027750939	9.36394E-07	0.027752
7447041452	574470	4145250	0.043355177	9.99992E-07	0.043356
7448041452	574480	4145250	0.066442885	9.87732E-07	0.066444
7446041452	574460	4145260	0.086245299	9.89087E-07	0.086246
7447041452	574470	4145260	0.08722436	9.90438E-07	0.087225
7448041452	574480	4145260	0.071591114	9.21501E-07	0.071592
7447041452	574470	4145270	0.047305869	9.03632E-07	0.047307
7449041451	574490	4145130	0.032471282	7.79807E-07	0.032472
7448041451	574480	4145140	0.022168479	7.19333E-07	0.022169
7449041451	574490	4145140	0.015746564	6.84574E-07	0.015747
7449041451	574490	4145150	0.011861142	6.11232E-07	0.011862
7450041451	574500	4145150	0.009218584	5.57257E-07	0.009219
7446041451	574460	4145160	0.005740198	8.12351E-07	0.005741
7449041451	574490	4145160	0.007003912	9.3828E-07	0.007005
7450041451	574500	4145160	0.008712736	9.91838E-07	0.008714
7451041451	574510	4145160	0.011020782	9.41153E-07	0.011022
7446041451	574460	4145170	0.014461093	9.31497E-07	0.014462
7447041451	574470	4145170	0.042899188	1.09211E-06	0.0429
7448041451	574480	4145170	0.027481697	8.60192E-07	0.027483
7449041451	574490	4145170	0.018673775	7.2512E-07	0.018674
7450041451	574500	4145170	0.013481126	6.41853E-07	0.013482
7451041451	574510	4145170	0.010075263	6.42917E-07	0.010076
7452041451	574520	4145170	0.005667675	8.5148E-07	0.005669
7446041451	574460	4145180	0.006953146	9.83972E-07	0.006954
7447041451	574470	4145180	0.008666503	1.06427E-06	0.008668
7448041451	574480	4145180	0.010950978	1.02255E-06	0.010952
7449041451	574490	4145180	0.058325744	1.288E-06	0.058327
7450041451	574500	4145180	0.033342465	1.04014E-06	0.033344
7451041451	574510	4145180	0.021488575	8.63358E-07	0.021489
7452041451	574520	4145180	0.014733961	8.69679E-07	0.014735
7453041451	574530	4145180	0.010671765	7.95304E-07	0.010673
7445041451	574450	4145190	0.005713909	1.14787E-06	0.005715
7446041451	574460	4145190	0.006801754	1.08787E-06	0.006803
7447041451	574470	4145190	0.008442588	1.18053E-06	0.008444
7448041451	574480	4145190	0.010847633	1.27796E-06	0.010849
7449041451	574490	4145190	0.071913841	2.23516E-06	0.071916
7450041451	574500	4145190	0.038516984	1.76636E-06	0.038519
7451041451	574510	4145190	0.024046825	1.3252E-06	0.024048
7452041451	574520	4145190	0.016528	1.03471E-06	0.016529
7444041452	574440	4145200	0.011824881	8.96853E-07	0.011826
7445041452	574450	4145200	0.005605124	1.38439E-06	0.005607
7446041452	574460	4145200	0.006692063	1.42986E-06	0.006693
7447041452	574470	4145200	0.008254934	1.55657E-06	0.008256
7448041452	574480	4145200	0.010369887	1.53269E-06	0.010371
7449041452	574490	4145200	0.073687029	4.88824E-06	0.073692
7450041452	574500	4145200	0.04175695	2.56424E-06	0.04176

Max GLC for Chronic Calcs

Max GLC: 0.022704

XY	X	Y	2025	2026	2027	2034	2035
57446041452	574460	4145230	0.005113	0	0		
57447041452	574470	4145230	0.0056361	0	0		
57448041452	574480	4145230	0.0055989	0	0		
57449041452	574490	4145230	0.0051151	0	0		
57450041452	574500	4145230	0.0039228	0	0		
57451041452	574510	4145230	0.0031206	0	0		
57452041452	574520	4145230	0.0023322	0	0		
57444041452	574440	4145240	0.0017777	0	0		
57445041452	574450	4145240	0.0013884	0	0		
57446041452	574460	4145240	0.0011042	0	0		
57447041452	574470	4145240	0.0007654	0	0		
57448041452	574480	4145240	0.0009285	0	0		
57449041452	574490	4145240	0.0011357	0	0		
57450041452	574500	4145240	0.0014462	0	0		
57451041452	574510	4145240	0.0018523	0	0		
57445041452	574450	4145250	0.0025169	0	0		
57446041452	574460	4145250	0.0037414	0	0		
57447041452	574470	4145250	0.0058452	0	0		
57448041452	574480	4145250	0.0089578	0	0		
57446041452	574460	4145260	0.0116275	0	0		
57447041452	574470	4145260	0.0117595	0	0		
57448041452	574480	4145260	0.0096518	0	0		
57447041452	574470	4145270	0.0063778	0	0		
57449041451	574490	4145130	0.0043778	0	0		
57448041451	574480	4145140	0.0029888	0	0		
57449041451	574490	4145140	0.002123	0	0		
57449041451	574490	4145150	0.0015992	0	0		
57450041451	574500	4145150	0.0012429	0	0		
57446041451	574460	4145160	0.000774	0	0		
57449041451	574490	4145160	0.0009444	0	0		
57450041451	574500	4145160	0.0011747	0	0		
57451041451	574510	4145160	0.0014859	0	0		
57446041451	574460	4145170	0.0019497	0	0		
57447041451	574470	4145170	0.0057837	0	0		
57448041451	574480	4145170	0.0037051	0	0		
57449041451	574490	4145170	0.0025176	0	0		
57450041451	574500	4145170	0.0018176	0	0		
57451041451	574510	4145170	0.0013584	0	0		
57452041451	574520	4145170	0.0007642	0	0		
57446041451	574460	4145180	0.0009375	0	0		
57447041451	574470	4145180	0.0011685	0	0		
57448041451	574480	4145180	0.0014765	0	0		
57449041451	574490	4145180	0.0078635	0	0		
57450041451	574500	4145180	0.0044953	0	0		
57451041451	574510	4145180	0.0028971	0	0		
57452041451	574520	4145180	0.0019865	0	0		
57453041451	574530	4145180	0.0014388	0	0		
57445041451	574450	4145190	0.0007705	0	0		
57446041451	574460	4145190	0.0009171	0	0		
57447041451	574470	4145190	0.0011383	0	0		
57448041451	574480	4145190	0.0014626	0	0		
57449041451	574490	4145190	0.0096955	0	0		
57450041451	574500	4145190	0.005193	0	0		
57451041451	574510	4145190	0.0032421	0	0		
57452041451	574520	4145190	0.0022284	0	0		
57444041452	574440	4145200	0.0015943	0	0		
57445041452	574450	4145200	0.0007558	0	0		
57446041452	574460	4145200	0.0009024	0	0		
57447041452	574470	4145200	0.0011131	0	0		
57448041452	574480	4145200	0.0013982	0	0		
57449041452	574490	4145200	0.0099348	0	0		
57450041452	574500	4145200	0.0056299	0	0		

Garvey Reservoir Rehab - Unmitigated Surge Tank Telemetry

Cancer Risk Summary & Maximum Annual GLC for Chronic Calculations

Cancer Risk Summary

Max Risk: 0.168405

XY	X	Y	Offroad Risk	Haul Risk	Total Risk
7451041452(	574510	4145200	0.026146367	1.74988E-06	0.026148
7443041452:	574430	4145210	0.018116254	1.2904E-06	0.018118
7444041452:	574440	4145210	0.012748643	1.05882E-06	0.01275
7445041452:	574450	4145210	0.005430162	1.64649E-06	0.005432
7446041452:	574460	4145210	0.006358457	1.62027E-06	0.00636
7447041452:	574470	4145210	0.007769937	1.81884E-06	0.007772
7448041452:	574480	4145210	0.009666414	1.88217E-06	0.009668
7449041452:	574490	4145210	0.102770579	3.88506E-05	0.102809
7450041452:	574500	4145210	0.063881008	7.62638E-06	0.063889
7451041452:	574510	4145210	0.041324532	3.48168E-06	0.041328
7443041452:	574430	4145220	0.026940494	2.18157E-06	0.026943
7444041452:	574440	4145220	0.018699158	1.56274E-06	0.018701
7445041452:	574450	4145220	0.013871843	1.20307E-06	0.013873
7446041452:	574460	4145220	0.005178145	1.94041E-06	0.00518
7447041452:	574470	4145220	0.006023038	2.02047E-06	0.006025
7448041452:	574480	4145220	0.007235986	2.25584E-06	0.007238
7449041452:	574490	4145220	0.008870474	2.43379E-06	0.008873
7450041452:	574500	4145220	0.082893828	6.09908E-05	0.082955
7451041452:	574510	4145220	0.069351058	2.74318E-05	0.069378
7452041452:	574520	4145220	0.051498607	8.8516E-06	0.051507
7453041452:	574530	4145220	0.037339391	4.24947E-06	0.037344
7444041452:	574440	4145230	0.026740149	2.57578E-06	0.026743
7445041452:	574450	4145230	0.01931923	1.81081E-06	0.019321
7446041452:	574460	4145230	0.014755718	1.30258E-06	0.014757
7447041452:	574470	4145230	0.004878081	2.38062E-06	0.00488
7448041452:	574480	4145230	0.005672208	2.56557E-06	0.005675
7449041452:	574490	4145230	0.00674011	2.8437E-06	0.006743
7450041452:	574500	4145230	0.008018328	3.18429E-06	0.008022
7451041452:	574510	4145230	0.046236154	1.13357E-05	0.046247
7452041452:	574520	4145230	0.052367977	6.1909E-05	0.05243
7444041452(	574440	4145240	0.048731853	2.50822E-05	0.048757
7445041452(	574450	4145240	0.040341845	8.15733E-06	0.04035
7446041452(	574460	4145240	0.030757925	4.87605E-06	0.030763
7447041452(	574470	4145240	0.023511968	3.02573E-06	0.023515
7448041452(	574480	4145240	0.018664709	1.91425E-06	0.018667
7449041452(	574490	4145240	0.014327832	1.49228E-06	0.014329
7450041452(	574500	4145240	0.004475578	3.02923E-06	0.004479
7451041452(	574510	4145240	0.005272425	3.41468E-06	0.005276
7445041452!	574450	4145250	0.006167178	3.68401E-06	0.006171
7446041452!	574460	4145250	0.007235986	4.42377E-06	0.00724
7447041452!	574470	4145250	0.008837838	4.33245E-06	0.008842
7448041452!	574480	4145250	0.017211529	5.54424E-06	0.017217
7446041452(	574460	4145260	0.021610958	6.43761E-06	0.021617
7447041452(	574470	4145260	0.026536178	7.95621E-06	0.026544
7448041452(	574480	4145260	0.031835799	1.36222E-05	0.031849
7447041452:	574470	4145270	0.034757571	6.00563E-05	0.034818
7449041451:	574490	4145130	0.034586235	2.51551E-05	0.034611
7448041451(	574480	4145140	0.030760645	8.06025E-06	0.030769
7449041451(	574490	4145140	0.025512697	4.82488E-06	0.025518
7449041451!	574490	4145150	0.020550308	3.20763E-06	0.020554
7450041451!	574500	4145150	0.016354851	2.28266E-06	0.016357
7446041451(	574460	4145160	0.013251771	1.66666E-06	0.013253
7449041451(	574490	4145160	0.004153757	5.3216E-06	0.004159
7450041451(	574500	4145160	0.004780175	6.07562E-06	0.004786
7451041451(	574510	4145160	0.00561147	5.89949E-06	0.005617
7446041451:	574460	4145170	0.00650169	7.24271E-06	0.006509
7447041451:	574470	4145170	0.007770843	7.32173E-06	0.007778
7448041451:	574480	4145170	0.00934278	7.47515E-06	0.00935
7449041451:	574490	4145170	0.011266453	7.75722E-06	0.011274
7450041451:	574500	4145170	0.013676938	8.61503E-06	0.013686
7451041451:	574510	4145170	0.016516215	9.43008E-06	0.016526
7452041451:	574520	4145170	0.019777938	1.09388E-05	0.019789

Max GLC for Chronic Calcs

Max GLC: 0.022704

XY	X	Y	2025	2026	2027	2034	2035
57451041452(	574510	4145200	0.0035252	0	0		
57443041452:	574430	4145210	0.0024425	0	0		
57444041452:	574440	4145210	0.0017189	0	0		
57445041452:	574450	4145210	0.0007323	0	0		
57446041452:	574460	4145210	0.0008574	0	0		
57447041452:	574470	4145210	0.0010477	0	0		
57448041452:	574480	4145210	0.0013034	0	0		
57449041452:	574490	4145210	0.0138595	0	0		
57450041452:	574500	4145210	0.0086131	0	0		
57451041452:	574510	4145210	0.0055717	0	0		
57443041452:	574430	4145220	0.0036323	0	0		
57444041452:	574440	4145220	0.0025211	0	0		
57445041452:	574450	4145220	0.0018703	0	0		
57446041452:	574460	4145220	0.0006983	0	0		
57447041452:	574470	4145220	0.0008122	0	0		
57448041452:	574480	4145220	0.0009758	0	0		
57449041452:	574490	4145220	0.0011962	0	0		
57450041452:	574500	4145220	0.0111822	0	0		
57451041452:	574510	4145220	0.0093527	0	0		
57452041452:	574520	4145220	0.0069439	0	0		
57453041452:	574530	4145220	0.0050345	0	0		
57444041452:	574440	4145230	0.0036053	0	0		
57445041452:	574450	4145230	0.0026048	0	0		
57446041452:	574460	4145230	0.0019895	0	0		
57447041452:	574470	4145230	0.0006579	0	0		
57448041452:	574480	4145230	0.000765	0	0		
57449041452:	574490	4145230	0.000909	0	0		
57450041452:	574500	4145230	0.0010814	0	0		
57451041452:	574510	4145230	0.0062347	0	0		
57452041452:	574520	4145230	0.0070668	0	0		
57444041452(	574440	4145240	0.0065726	0	0		
57445041452(	574450	4145240	0.0054397	0	0		
57446041452(	574460	4145240	0.0041472	0	0		
57447041452(	574470	4145240	0.0031702	0	0		
57448041452(	574480	4145240	0.0025165	0	0		
57449041452(	574490	4145240	0.0019318	0	0		
57450041452(	574500	4145240	0.0006037	0	0		
57451041452(	574510	4145240	0.0007112	0	0		
57445041452!	574450	4145250	0.0008318	0	0		
57446041452!	574460	4145250	0.000976	0	0		
57447041452!	574470	4145250	0.001192	0	0		
57448041452!	574480	4145250	0.002321	0	0		
57446041452(	574460	4145260	0.0029142	0	0		
57447041452(	574470	4145260	0.0035784	0	0		
57448041452(	574480	4145260	0.0042935	0	0		
57447041452:	574470	4145270	0.0046924	0	0		
57449041451:	574490	4145130	0.0046656	0	0		
57448041451(	574480	4145140	0.0041479	0	0		
57449041451(	574490	4145140	0.0034401	0	0		
57449041451!	574490	4145150	0.0027709	0	0		
57450041451!	574500	4145150	0.0022052	0	0		
57446041451(	574460	4145160	0.0017868	0	0		
57449041451(	574490	4145160	0.0005606	0	0		
57450041451(	574500	4145160	0.0006451	0	0		
57451041451(	574510	4145160	0.0007572	0	0		
57446041451:	574460	4145170	0.0008773	0	0		
57447041451:	574470	4145170	0.0010484	0	0		
57448041451:	574480	4145170	0.0012604	0	0		
57449041451:	574490	4145170	0.0015198	0	0		
57450041451:	574500	4145170	0.0018448	0	0		
57451041451:	574510	4145170	0.0022277	0	0		
57452041451:	574520	4145170	0.0026676	0	0		

Garvey Reservoir Rehab - Unmitigated Surge Tank Telemetry

Cancer Risk Summary & Maximum Annual GLC for Chronic Calculations

Cancer Risk Summary

Max Risk: 0.168405

XY	X	Y	Offroad Risk	Haul Risk	Total Risk
7446041451	574460	4145180	0.022776766	1.71687E-05	0.022794
7447041451	574470	4145180	0.025406632	2.28307E-05	0.025429
7448041451	574480	4145180	0.023615313	9.19858E-06	0.023625
7449041451	574490	4145180	0.0207017	5.01627E-06	0.020707
7450041451	574500	4145180	0.0175125	3.28658E-06	0.017516
7451041451	574510	4145180	0.01445656	2.42413E-06	0.014459
7452041451	574520	4145180	0.012066926	1.78001E-06	0.012069
7453041451	574530	4145180	0.003894487	1.54524E-05	0.00391
7445041451	574450	4145190	0.004401242	1.92007E-05	0.00442
7446041451	574460	4145190	0.005117407	1.40763E-05	0.005131
7447041451	574470	4145190	0.00588887	1.83938E-05	0.005907
7448041451	574480	4145190	0.0068081	1.96973E-05	0.006828
7449041451	574490	4145190	0.008002917	1.96904E-05	0.008023
7450041451	574500	4145190	0.009456097	2.03686E-05	0.009476
7451041451	574510	4145190	0.011150417	2.11767E-05	0.011172
7452041451	574520	4145190	0.01307409	2.1699E-05	0.013096
7444041452	574440	4145200	0.015212613	2.33766E-05	0.015236
7445041452	574450	4145200	0.017157137	2.81512E-05	0.017185
7446041452	574460	4145200	0.01880341	8.97886E-05	0.018893
7447041452	574470	4145200	0.019166025	3.11976E-05	0.019197
7448041452	574480	4145200	0.018222319	1.09729E-05	0.018233
7449041452	574490	4145200	0.016500803	5.88504E-06	0.016507
7450041452	574500	4145200	0.014495542	3.70121E-06	0.014499
7451041452	574510	4145200	0.012498438	2.53389E-06	0.012501
7443041452	574430	4145210	0.010754259	1.84451E-06	0.010756
7444041452	574440	4145210	0.003599862	6.2213E-05	0.003662
7445041452	574450	4145210	0.00408214	8.01236E-05	0.004162
7446041452	574460	4145210	0.004598867	7.8457E-05	0.004677
7447041452	574470	4145210	0.005341321	8.64264E-05	0.005428
7448041452	574480	4145210	0.006097374	8.15121E-05	0.006179
7449041452	574490	4145210	0.006972183	8.85581E-05	0.007061
7450041452	574500	4145210	0.008067281	8.57108E-05	0.008153
7451041452	574510	4145210	0.009474228	8.32593E-05	0.009557
7443041452	574430	4145220	0.010831315	8.00607E-05	0.010911
7444041452	574440	4145220	0.012171178	8.09394E-05	0.012252
7445041452	574450	4145220	0.013511041	8.31892E-05	0.013594
7446041452	574460	4145220	0.014632429	8.7397E-05	0.01472
7447041452	574470	4145220	0.014944278	4.29723E-05	0.014987
7448041452	574480	4145220	0.014561719	1.15002E-05	0.014573
7449041452	574490	4145220	0.01356906	5.88054E-06	0.013575
7450041452	574500	4145220	0.01215758	3.64764E-06	0.012161
7451041452	574510	4145220	0.010760605	2.52141E-06	0.010763
7452041452	574520	4145220	0.009509583	1.86615E-06	0.009511
7453041452	574530	4145220	0.009564882	8.38704E-07	0.009566
7444041452	574440	4145230	0.01082225	8.58742E-07	0.010823
7445041452	574450	4145230	0.012124945	8.00413E-07	0.012126
7446041452	574460	4145230	0.013958871	8.23552E-07	0.01396
7447041452	574470	4145230	0.015615116	7.90952E-07	0.015616
7448041452	574480	4145230	0.018192403	8.09377E-07	0.018193
7449041452	574490	4145230	0.022150348	8.45877E-07	0.022151
7450041452	574500	4145230	0.025960527	8.52987E-07	0.025961
7451041452	574510	4145230	0.031765089	9.01054E-07	0.031766
7452041452	574520	4145230	0.039089916	9.27297E-07	0.039091
7444041452	574440	4145240	0.046636844	9.24736E-07	0.046638
7445041452	574450	4145240	0.054295276	9.18596E-07	0.054296
7446041452	574460	4145240	0.060515033	9.14728E-07	0.060516
7447041452	574470	4145240	0.063885541	9.19398E-07	0.063886
7448041452	574480	4145240	0.064530996	9.20521E-07	0.064532
7449041452	574490	4145240	0.062822172	9.08417E-07	0.062823
7450041452	574500	4145240	0.058478949	8.8914E-07	0.05848
7451041452	574510	4145240	0.053605401	8.38565E-07	0.053606
7445041452	574450	4145250	0.045312392	8.38901E-07	0.045313

Max GLC for Chronic Calcs

Max GLC: 0.022704

XY	X	Y	2025	2026	2027	2034	2035
574460414518	574460	4145180	0.0030726	0	0		
574470414518	574470	4145180	0.0034277	0	0		
574480414518	574480	4145180	0.0031848	0	0		
574490414518	574490	4145180	0.0027915	0	0		
574500414518	574500	4145180	0.0023613	0	0		
574510414518	574510	4145180	0.0019493	0	0		
574520414518	574520	4145180	0.001627	0	0		
574530414518	574530	4145180	0.0005267	0	0		
574450414519	574450	4145190	0.0005954	0	0		
574460414519	574460	4145190	0.0006914	0	0		
574470414519	574470	4145190	0.0007959	0	0		
574480414519	574480	4145190	0.00092	0	0		
574490414519	574490	4145190	0.0010811	0	0		
574500414519	574500	4145190	0.0012771	0	0		
574510414519	574510	4145190	0.0015056	0	0		
574520414519	574520	4145190	0.001765	0	0		
574440414520	574440	4145200	0.0020535	0	0		
574450414520	574450	4145200	0.0023161	0	0		
574460414520	574460	4145200	0.0025447	0	0		
574470414520	574470	4145200	0.0025873	0	0		
574480414520	574480	4145200	0.0024579	0	0		
574490414520	574490	4145200	0.0022252	0	0		
574500414520	574500	4145200	0.0019547	0	0		
574510414520	574510	4145200	0.0016853	0	0		
574430414521	574430	4145210	0.0014501	0	0		
574440414521	574440	4145210	0.0004921	0	0		
574450414521	574450	4145210	0.000559	0	0		
574460414521	574460	4145210	0.0006285	0	0		
574470414521	574470	4145210	0.0007295	0	0		
574480414521	574480	4145210	0.0008309	0	0		
574490414521	574490	4145210	0.0009496	0	0		
574500414521	574500	4145210	0.0010969	0	0		
574510414521	574510	4145210	0.0012863	0	0		
574430414522	574430	4145220	0.0014689	0	0		
574440414522	574440	4145220	0.0016496	0	0		
574450414522	574450	4145220	0.0018305	0	0		
574460414522	574460	4145220	0.0019822	0	0		
574470414522	574470	4145220	0.0020194	0	0		
574480414522	574480	4145220	0.0019644	0	0		
574490414522	574490	4145220	0.00183	0	0		
574500414522	574500	4145220	0.0016395	0	0		
574510414522	574510	4145220	0.001451	0	0		
574520414522	574520	4145220	0.0012823	0	0		
574530414522	574530	4145220	0.0012896	0	0		
574440414523	574440	4145230	0.0014591	0	0		
574450414523	574450	4145230	0.0016347	0	0		
574460414523	574460	4145230	0.001882	0	0		
574470414523	574470	4145230	0.0021053	0	0		
574480414523	574480	4145230	0.0024527	0	0		
574490414523	574490	4145230	0.0029863	0	0		
574500414523	574500	4145230	0.0035	0	0		
574510414523	574510	4145230	0.0042826	0	0		
574520414523	574520	4145230	0.0052701	0	0		
574440414524	574440	4145240	0.0062876	0	0		
574450414524	574450	4145240	0.0073201	0	0		
574460414524	574460	4145240	0.0081586	0	0		
574470414524	574470	4145240	0.008613	0	0		
574480414524	574480	4145240	0.0087	0	0		
574490414524	574490	4145240	0.0084696	0	0		
574500414524	574500	4145240	0.0078841	0	0		
574510414524	574510	4145240	0.007227	0	0		
574450414525	574450	4145250	0.006109	0	0		

Garvey Reservoir Rehab - Unmitigated Surge Tank Telemetry

Cancer Risk Summary & Maximum Annual GLC for Chronic Calculations

Cancer Risk Summary

Max Risk: 0.168405

XY	X	Y	Offroad Risk	Haul Risk	Total Risk
7446041452	574460	4145250	0.037666651	8.36121E-07	0.037667
7447041452	574470	4145250	0.031588314	8.13661E-07	0.031589
7448041452	574480	4145250	0.027636715	7.18871E-07	0.027637
7446041452	574460	4145260	0.02321281	6.94935E-07	0.023214
7447041452	574470	4145260	0.009788797	8.95929E-07	0.00979
7448041452	574480	4145260	0.01100809	8.63144E-07	0.011009
7447041452	574470	4145270	0.012405065	8.17477E-07	0.012406
7449041451	574490	4145130	0.014121141	8.27371E-07	0.014122
7448041451	574480	4145140	0.016447318	8.49154E-07	0.016448
7449041451	574490	4145140	0.019586659	8.74651E-07	0.019588
7449041451	574490	4145150	0.024209095	9.4346E-07	0.02421
7450041451	574500	4145150	0.029479707	9.66401E-07	0.029481
7446041451	574460	4145160	0.037096439	1.0097E-06	0.037097
7449041451	574490	4145160	0.046870731	1.02412E-06	0.046872
7450041451	574500	4145160	0.058759069	1.02366E-06	0.05876
7451041451	574510	4145160	0.07368159	1.01106E-06	0.073683
7446041451	574460	4145170	0.087510826	1.00541E-06	0.087512
7447041451	574470	4145170	0.096679551	1.01483E-06	0.096681
7448041451	574480	4145170	0.099682911	1.02217E-06	0.099684
7449041451	574490	4145170	0.095875452	1.01757E-06	0.095876
7450041451	574500	4145170	0.085834638	1.00483E-06	0.085836
7451041451	574510	4145170	0.075295228	9.4921E-07	0.075296
7452041451	574520	4145170	0.061342702	9.26148E-07	0.061344
7446041451	574460	4145180	0.048090024	9.29105E-07	0.048091
7447041451	574470	4145180	0.038364685	9.10083E-07	0.038366
7448041451	574480	4145180	0.032566469	7.9306E-07	0.032567
7449041451	574490	4145180	0.026563374	7.69183E-07	0.026564
7450041451	574500	4145180	0.009954693	9.56532E-07	0.009956
7451041451	574510	4145180	0.011290023	9.50446E-07	0.011291
7452041451	574520	4145180	0.012594531	8.61956E-07	0.012595
7453041451	574530	4145180	0.01457985	8.86706E-07	0.014581
7445041451	574450	4145190	0.017155324	9.13421E-07	0.017156
7446041451	574460	4145190	0.0213118	1.01882E-06	0.021313
7447041451	574470	4145190	0.02626331	1.0673E-06	0.026264
7448041451	574480	4145190	0.03284115	1.09527E-06	0.032842
7449041451	574490	4145190	0.042130444	1.12257E-06	0.042132
7450041451	574500	4145190	0.055292468	1.13575E-06	0.055294
7451041451	574510	4145190	0.073463114	1.13918E-06	0.073464
7452041451	574520	4145190	0.100402702	1.12744E-06	0.100404
7444041452	574440	4145200	0.133381646	1.11844E-06	0.133383
7445041452	574450	4145200	0.155861973	1.14258E-06	0.155863
7446041452	574460	4145200	0.168403925	1.16358E-06	0.168405
7447041452	574470	4145200	0.164308187	1.1482E-06	0.164309
7448041452	574480	4145200	0.143542123	1.10389E-06	0.143543
7449041452	574490	4145200	0.114138565	1.04571E-06	0.11414
7450041452	574500	4145200	0.086023197	9.96947E-07	0.086024
7451041452	574510	4145200	0.062292754	1.0371E-06	0.062294
7443041452	574430	4145210	0.036660394	9.7758E-07	0.036661
7444041452	574440	4145210	0.030215816	8.35501E-07	0.030217
7445041452	574450	4145210	0.010040814	1.01146E-06	0.010042
7446041452	574460	4145210	0.011148603	8.9924E-07	0.01115
7447041452	574470	4145210	0.012798503	9.22873E-07	0.012799
7448041452	574480	4145210	0.015057595	9.64669E-07	0.015059
7449041452	574490	4145210	0.043355177	1.06061E-06	0.043356
7450041452	574500	4145210	0.03403778	9.21666E-07	0.034039
7451041452	574510	4145210	0.010065291	1.07376E-06	0.010066
7443041452	574430	4145220	0.011202089	9.65153E-07	0.011203
7444041452	574440	4145220	0.012948988	9.99724E-07	0.01295
7445041452	574450	4145220	0.050078062	1.12693E-06	0.050079
7446041452	574460	4145220	0.038011135	1.03017E-06	0.038012
7447041452	574470	4145220	0.009874011	1.05343E-06	0.009875
7448041452	574480	4145220	0.011207528	1.04887E-06	0.011209

Max GLC for Chronic Calcs

Max GLC: 0.022704

XY	X	Y	2025	2026	2027	2034	2035
57446041452	574460	4145250	0.0050782	0	0		
57447041452	574470	4145250	0.0042588	0	0		
57448041452	574480	4145250	0.003726	0	0		
57446041452	574460	4145260	0.0031296	0	0		
57447041452	574470	4145260	0.0013198	0	0		
57448041452	574480	4145260	0.0014842	0	0		
57447041452	574470	4145270	0.0016725	0	0		
57449041451	574490	4145130	0.0019039	0	0		
57448041451	574480	4145140	0.0022175	0	0		
57449041451	574490	4145140	0.0026407	0	0		
57449041451	574490	4145150	0.0032639	0	0		
57450041451	574500	4145150	0.0039745	0	0		
57446041451	574460	4145160	0.0050014	0	0		
57449041451	574490	4145160	0.0063191	0	0		
57450041451	574500	4145160	0.0079219	0	0		
57451041451	574510	4145160	0.0099337	0	0		
57446041451	574460	4145170	0.0117981	0	0		
57447041451	574470	4145170	0.0130342	0	0		
57448041451	574480	4145170	0.0134391	0	0		
57449041451	574490	4145170	0.0129258	0	0		
57450041451	574500	4145170	0.0115721	0	0		
57451041451	574510	4145170	0.0101512	0	0		
57452041451	574520	4145170	0.0082702	0	0		
57446041451	574460	4145180	0.0064835	0	0		
57447041451	574470	4145180	0.0051723	0	0		
57448041451	574480	4145180	0.0043906	0	0		
57449041451	574490	4145180	0.0035813	0	0		
57450041451	574500	4145180	0.0013422	0	0		
57451041451	574510	4145180	0.0015222	0	0		
57452041451	574520	4145180	0.0016981	0	0		
57453041451	574530	4145180	0.0019657	0	0		
57445041451	574450	4145190	0.0023129	0	0		
57446041451	574460	4145190	0.0028733	0	0		
57447041451	574470	4145190	0.0035409	0	0		
57448041451	574480	4145190	0.0044277	0	0		
57449041451	574490	4145190	0.00568	0	0		
57450041451	574500	4145190	0.0074545	0	0		
57451041451	574510	4145190	0.0099042	0	0		
57452041451	574520	4145190	0.0135362	0	0		
57444041452	574440	4145200	0.0179823	0	0		
57445041452	574450	4145200	0.0210131	0	0		
57446041452	574460	4145200	0.0227039	0	0		
57447041452	574470	4145200	0.0221518	0	0		
57448041452	574480	4145200	0.0193521	0	0		
57449041452	574490	4145200	0.015388	0	0		
57450041452	574500	4145200	0.0115976	0	0		
57451041452	574510	4145200	0.0083983	0	0		
57443041452	574430	4145210	0.0049426	0	0		
57444041452	574440	4145210	0.0040737	0	0		
57445041452	574450	4145210	0.0013538	0	0		
57446041452	574460	4145210	0.0015031	0	0		
57447041452	574470	4145210	0.0017256	0	0		
57448041452	574480	4145210	0.0020301	0	0		
57449041452	574490	4145210	0.0058452	0	0		
57450041452	574500	4145210	0.004589	0	0		
57451041452	574510	4145210	0.0013571	0	0		
57443041452	574430	4145220	0.0015103	0	0		
57444041452	574440	4145220	0.0017459	0	0		
57445041452	574450	4145220	0.0067515	0	0		
57446041452	574460	4145220	0.0051247	0	0		
57447041452	574470	4145220	0.0013313	0	0		
57448041452	574480	4145220	0.0015111	0	0		

Garvey Reservoir Rehab - Unmitigated Surge Tank Telemetry

Cancer Risk Summary & Maximum Annual GLC for Chronic Calculations

Cancer Risk Summary

Max Risk: 0.168405

XY	X	Y	Offroad Risk	Haul Risk	Total Risk
7449041452	574490	4145220	0.056975909	1.29511E-06	0.056977
7450041452	574500	4145220	0.042299966	1.1738E-06	0.042301
7451041452	574510	4145220	0.009789703	1.13566E-06	0.009791
7452041452	574520	4145220	0.011169454	1.17345E-06	0.011171
7453041452	574530	4145220	0.063244619	1.72904E-06	0.063246
7444041452	574440	4145230	0.045937903	1.61797E-06	0.04594
7445041452	574450	4145230	0.009687264	1.25236E-06	0.009689
7446041452	574460	4145230	0.011068828	1.31629E-06	0.01107
7447041452	574470	4145230	0.068957621	2.32728E-06	0.06896
7448041452	574480	4145230	0.049259458	2.14334E-06	0.049262
7449041452	574490	4145230	0.009694517	1.55945E-06	0.009696
7450041452	574500	4145230	0.010825876	1.43644E-06	0.010827
7451041452	574510	4145230	0.099736397	4.93729E-06	0.099741
7452041452	574520	4145230	0.070401736	3.57691E-06	0.070405
7444041452	574440	4145240	0.05159198	2.69886E-06	0.051595
7445041452	574450	4145240	0.009428901	1.68007E-06	0.009431
7446041452	574460	4145240	0.010522186	1.57247E-06	0.010524
7447041452	574470	4145240	0.130279473	2.92656E-05	0.130309
7448041452	574480	4145240	0.091350014	8.45334E-06	0.091358
7449041452	574490	4145240	0.069484319	4.84361E-06	0.069489
7450041452	574500	4145240	0.052516649	3.33494E-06	0.05252
7451041452	574510	4145240	0.009120678	1.81837E-06	0.009122
7445041452	574450	4145250	0.01016501	1.73875E-06	0.010167
7446041452	574460	4145250	0.11334897	4.26332E-05	0.113392
7447041452	574470	4145250	0.080542269	1.08415E-05	0.080553
7448041452	574480	4145250	0.062169465	5.84538E-06	0.062175
7446041452	574460	4145260	0.049136169	3.96518E-06	0.04914
7447041452	574470	4145260	0.008751717	1.94643E-06	0.008754
7448041452	574480	4145260	0.009768853	1.9372E-06	0.009771
7447041452	574470	4145270	0.113988986	0.000112945	0.114102
7457041450	574570	4145030	0.094379664	2.98982E-05	0.09441
7463041450	574630	4145080	0.076829996	1.31771E-05	0.076843
7461041450	574610	4145090	0.061410693	7.26439E-06	0.061418
7462041450	574620	4145090	0.048842451	4.71349E-06	0.048847
7463041450	574630	4145090	0.008437149	2.20552E-06	0.008439
7464041450	574640	4145090	0.009353658	2.18907E-06	0.009356
7460041451	574600	4145100	0.01056298	2.33355E-06	0.010565
7461041451	574610	4145100	0.099562341	9.176E-05	0.099654
7462041451	574620	4145100	0.090531411	6.76456E-05	0.090599
7463041451	574630	4145100	0.078126346	2.49168E-05	0.078151
7464041451	574640	4145100	0.066325035	1.31014E-05	0.066338
7465041451	574650	4145100	0.055409411	7.87864E-06	0.055417
7459041451	574590	4145110	0.046063912	5.23435E-06	0.046069
7460041451	574600	4145110	0.008060029	2.4509E-06	0.008062
7461041451	574610	4145110	0.008914894	2.49475E-06	0.008917
7462041451	574620	4145110	0.0099973	2.61483E-06	0.01
7463041451	574630	4145110	0.078757296	2.20589E-05	0.078779
7464041451	574640	4145110	0.07766945	8.73712E-05	0.077757
7465041451	574650	4145110	0.072688024	6.76682E-05	0.072756
7466041451	574660	4145110	0.064873667	2.39862E-05	0.064898
7460041451	574600	4145120	0.056499977	1.31235E-05	0.056513
7461041451	574610	4145120	0.048587714	8.29862E-06	0.048596
7462041451	574620	4145120	0.04138255	5.70009E-06	0.041388
7463041451	574630	4145120	0.007759058	2.78166E-06	0.007762
7464041451	574640	4145120	0.008485195	2.86458E-06	0.008488
7465041451	574650	4145120	0.009442499	2.96785E-06	0.009445
7466041451	574660	4145120	0.056166371	1.18839E-05	0.056178
7460041451	574600	4145130	0.061611037	2.31411E-05	0.061634
7462041451	574620	4145130	0.061558458	8.78034E-05	0.061646
7463041451	574630	4145130	0.059462543	6.60676E-05	0.059529
7464041451	574640	4145130	0.055077619	2.2172E-05	0.0551
7465041451	574650	4145130	0.049545924	1.21328E-05	0.049558

Max GLC for Chronic Calcs

Max GLC: 0.022704

XY	X	Y	2025	2026	2027	2034	2035
57449041452	574490	4145220	0.0076815	0	0		
57450041452	574500	4145220	0.0057029	0	0		
57451041452	574510	4145220	0.0013199	0	0		
57452041452	574520	4145220	0.001506	0	0		
57453041452	574530	4145220	0.0085267	0	0		
57444041452	574440	4145230	0.0061934	0	0		
57445041452	574450	4145230	0.0013061	0	0		
57446041452	574460	4145230	0.0014924	0	0		
57447041452	574470	4145230	0.009297	0	0		
57448041452	574480	4145230	0.0066413	0	0		
57449041452	574490	4145230	0.0013072	0	0		
57450041452	574500	4145230	0.0014597	0	0		
57451041452	574510	4145230	0.0134468	0	0		
57452041452	574520	4145230	0.0094918	0	0		
57444041452	574440	4145240	0.0069558	0	0		
57445041452	574450	4145240	0.0012714	0	0		
57446041452	574460	4145240	0.0014187	0	0		
57447041452	574470	4145240	0.0175671	0	0		
57448041452	574480	4145240	0.0123165	0	0		
57449041452	574490	4145240	0.0093682	0	0		
57450041452	574500	4145240	0.0070805	0	0		
57451041452	574510	4145240	0.0012298	0	0		
57445041452	574450	4145250	0.0013706	0	0		
57446041452	574460	4145250	0.0152861	0	0		
57447041452	574470	4145250	0.0108597	0	0		
57448041452	574480	4145250	0.0083822	0	0		
57446041452	574460	4145260	0.0066249	0	0		
57447041452	574470	4145260	0.0011801	0	0		
57448041452	574480	4145260	0.0013172	0	0		
57447041452	574470	4145270	0.0153799	0	0		
57457041450	574570	4145030	0.0127273	0	0		
57463041450	574630	4145080	0.0103595	0	0		
57461041450	574610	4145090	0.00828	0	0		
57462041450	574620	4145090	0.0065853	0	0		
57463041450	574630	4145090	0.0011377	0	0		
57464041450	574640	4145090	0.0012613	0	0		
57460041451	574600	4145100	0.0014243	0	0		
57461041451	574610	4145100	0.0134327	0	0		
57462041451	574620	4145100	0.0122126	0	0		
57463041451	574630	4145100	0.0105355	0	0		
57464041451	574640	4145100	0.0089432	0	0		
57465041451	574650	4145100	0.007471	0	0		
57459041451	574590	4145110	0.0062108	0	0		
57460041451	574600	4145110	0.0010869	0	0		
57461041451	574610	4145110	0.0012022	0	0		
57462041451	574620	4145110	0.0013481	0	0		
57463041451	574630	4145110	0.0106203	0	0		
57464041451	574640	4145110	0.0104807	0	0		
57465041451	574650	4145110	0.009807	0	0		
57466041451	574660	4145110	0.0087487	0	0		
57460041451	574600	4145120	0.0076186	0	0		
57461041451	574610	4145120	0.0065514	0	0		
57462041451	574620	4145120	0.0055797	0	0		
57463041451	574630	4145120	0.0010464	0	0		
57464041451	574640	4145120	0.0011443	0	0		
57465041451	574650	4145120	0.0012733	0	0		
57466041451	574660	4145120	0.0075735	0	0		
57460041451	574600	4145130	0.0083088	0	0		
57462041451	574620	4145130	0.0083087	0	0		
57463041451	574630	4145130	0.0080237	0	0		
57464041451	574640	4145130	0.0074278	0	0		
57465041451	574650	4145130	0.006681	0	0		

Garvey Reservoir Rehab - Unmitigated Surge Tank Telemetry

Cancer Risk Summary & Maximum Annual GLC for Chronic Calculations

Cancer Risk Summary

Max Risk: 0.168405

XY	X	Y	Offroad Risk	Haul Risk	Total Risk
7463041451	574630	4145140	0.042821226	8.5915E-06	0.04283
7464041451	574640	4145140	0.037174401	6.03364E-06	0.03718
7459041451	574590	4145150	0.007372873	3.17289E-06	0.007376
7460041451	574600	4145150	0.008046431	3.30838E-06	0.00805
7460041451	574600	4145160	0.008924866	3.43704E-06	0.008928
7461041451	574610	4145160	0.036422881	6.76879E-06	0.03643
7461041451	574610	4145170	0.040621965	8.5992E-06	0.040631
7457041450	574570	4145030	0.044735834	1.24368E-05	0.044748
7463041450	574630	4145080	0.048183398	2.30067E-05	0.048206
7461041450	574610	4145090	0.04983239	8.62032E-05	0.049919
7462041450	574620	4145090	0.049056394	5.70193E-05	0.049113
7463041450	574630	4145090	0.046189014	2.18404E-05	0.046211
7464041450	574640	4145090	0.042444106	1.20548E-05	0.042456
7460041451	574600	4145100	0.038341115	7.51331E-06	0.038349
7461041451	574610	4145100	0.03410577	5.44298E-06	0.034111
7462041451	574620	4145100	0.007006632	3.68987E-06	0.00701
7463041451	574630	4145100	0.007645741	3.89103E-06	0.00765
7464041451	574640	4145100	0.008424457	4.02073E-06	0.008428
7465041451	574650	4145100	0.009443406	3.86952E-06	0.009447
7459041451	574590	4145110	0.027289511	6.40285E-06	0.027296
7460041451	574600	4145110	0.0305603	7.4921E-06	0.030568
7461041451	574610	4145110	0.033708706	9.41381E-06	0.033718
7462041451	574620	4145110	0.036809066	1.34412E-05	0.036823
7463041451	574630	4145110	0.039075411	2.35743E-05	0.039099
7464041451	574640	4145110	0.041049851	7.85228E-05	0.041128
7465041451	574650	4145110	0.040757945	5.49885E-05	0.040813
7466041451	574660	4145110	0.03896572	2.19977E-05	0.038988
7460041451	574600	4145120	0.036524413	1.17816E-05	0.036536
7461041451	574610	4145120	0.033531932	7.59983E-06	0.03354
7462041451	574620	4145120	0.030368114	5.41188E-06	0.030374
7463041451	574630	4145120	0.006686624	4.30609E-06	0.006691
7464041451	574640	4145120	0.007256836	4.67272E-06	0.007262
7465041451	574650	4145120	0.008008356	4.65603E-06	0.008013
7466041451	574660	4145120	0.008865941	4.49214E-06	0.00887
7460041451	574600	4145130	0.009843189	4.44093E-06	0.009848
7462041451	574620	4145130	0.015258846	5.47153E-06	0.015264
7463041451	574630	4145130	0.017120875	5.79973E-06	0.017127
7464041451	574640	4145130	0.018975652	6.29959E-06	0.018982
7465041451	574650	4145130	0.021347155	6.76247E-06	0.021354
7463041451	574630	4145140	0.023766705	7.43929E-06	0.023774
7464041451	574640	4145140	0.026043928	8.45088E-06	0.026052
7459041451	574590	4145150	0.028674701	1.06162E-05	0.028685
7460041451	574600	4145150	0.030932887	1.50479E-05	0.030948
7460041451	574600	4145160	0.032510263	2.63187E-05	0.032537
7461041451	574610	4145160	0.033387792	8.38717E-05	0.033472
7461041451	574610	4145170	0.034145658	5.46098E-05	0.0342
7457041450	574570	4145030	0.033075036	2.19926E-05	0.033097
7463041450	574630	4145080	0.031595567	1.14376E-05	0.031607
7461041450	574610	4145090	0.029423502	7.54496E-06	0.029431
7462041450	574620	4145090	0.027029335	5.45742E-06	0.027035
7463041450	574630	4145090	0.006376588	5.19031E-06	0.006382
7464041450	574640	4145090	0.006872464	5.87729E-06	0.006878
7460041451	574600	4145100	0.007578657	5.52296E-06	0.007584
7461041451	574610	4145100	0.008319299	5.55638E-06	0.008325
7462041451	574620	4145100	0.009162379	5.65557E-06	0.009168
7463041451	574630	4145100	0.010129655	5.7736E-06	0.010135
7464041451	574640	4145100	0.011223846	5.95177E-06	0.01123
7465041451	574650	4145100	0.012424102	6.2746E-06	0.01243
7459041451	574590	4145110	0.013793881	6.58462E-06	0.0138
7460041451	574600	4145110	0.015251594	7.06042E-06	0.015259
7461041451	574610	4145110	0.016834409	7.596E-06	0.016842
7462041451	574620	4145110	0.018669242	8.06809E-06	0.018677

Max GLC for Chronic Calcs

Max GLC: 0.022704

XY	X	Y	2025	2026	2027	2034	2035
57463041451	574630	4145140	0.005774	0	0		
57464041451	574640	4145140	0.0050124	0	0		
57459041451	574590	4145150	0.0009943	0	0		
57460041451	574600	4145150	0.0010852	0	0		
57460041451	574600	4145160	0.0012036	0	0		
57461041451	574610	4145160	0.0049112	0	0		
57461041451	574610	4145170	0.0054775	0	0		
57457041450	574570	4145030	0.0060325	0	0		
57463041450	574630	4145080	0.0064985	0	0		
57461041450	574610	4145090	0.0067276	0	0		
57462041450	574620	4145090	0.0066198	0	0		
57463041450	574630	4145090	0.0062295	0	0		
57464041450	574640	4145090	0.0057235	0	0		
57460041451	574600	4145100	0.0051699	0	0		
57461041451	574610	4145100	0.0045986	0	0		
57462041451	574620	4145100	0.000945	0	0		
57463041451	574630	4145100	0.0010312	0	0		
57464041451	574640	4145100	0.0011362	0	0		
57465041451	574650	4145100	0.0012736	0	0		
57459041451	574590	4145110	0.0036798	0	0		
57460041451	574600	4145110	0.0041209	0	0		
57461041451	574610	4145110	0.0045455	0	0		
57462041451	574620	4145110	0.004964	0	0		
57463041451	574630	4145110	0.0052706	0	0		
57464041451	574640	4145110	0.0055427	0	0		
57465041451	574650	4145110	0.0055008	0	0		
57466041451	574660	4145110	0.0052556	0	0		
57460041451	574600	4145120	0.0049254	0	0		
57461041451	574610	4145120	0.0045215	0	0		
57462041451	574620	4145120	0.0040947	0	0		
57463041451	574630	4145120	0.0009019	0	0		
57464041451	574640	4145120	0.0009789	0	0		
57465041451	574650	4145120	0.0010802	0	0		
57466041451	574660	4145120	0.0011958	0	0		
57460041451	574600	4145130	0.0013275	0	0		
57462041451	574620	4145130	0.0020578	0	0		
57463041451	574630	4145130	0.0023088	0	0		
57464041451	574640	4145130	0.0025589	0	0		
57465041451	574650	4145130	0.0028787	0	0		
57463041451	574630	4145140	0.003205	0	0		
57464041451	574640	4145140	0.0035121	0	0		
57459041451	574590	4145150	0.003867	0	0		
57460041451	574600	4145150	0.0041719	0	0		
57460041451	574600	4145160	0.0043858	0	0		
57461041451	574610	4145160	0.0045103	0	0		
57461041451	574610	4145170	0.0046093	0	0		
57457041450	574570	4145030	0.0044615	0	0		
57463041450	574630	4145080	0.0042609	0	0		
57461041450	574610	4145090	0.0039676	0	0		
57462041450	574620	4145090	0.0036446	0	0		
57463041450	574630	4145090	0.0008602	0	0		
57464041450	574640	4145090	0.0009272	0	0		
57460041451	574600	4145100	0.0010223	0	0		
57461041451	574610	4145100	0.0011222	0	0		
57462041451	574620	4145100	0.0012359	0	0		
57463041451	574630	4145100	0.0013663	0	0		
57464041451	574640	4145100	0.0015138	0	0		
57465041451	574650	4145100	0.0016757	0	0		
57459041451	574590	4145110	0.0018604	0	0		
57460041451	574600	4145110	0.0020569	0	0		
57461041451	574610	4145110	0.0022704	0	0		
57462041451	574620	4145110	0.0025178	0	0		

Garvey Reservoir Rehab - Unmitigated Surge Tank Telemetry

Cancer Risk Summary & Maximum Annual GLC for Chronic Calculations

Cancer Risk Summary

Max Risk: 0.168405

XY	X	Y	Offroad Risk	Haul Risk	Total Risk
7463041451	574630	4145110	0.020546682	8.70469E-06	0.020555
7464041451	574640	4145110	0.022311712	9.6602E-06	0.022321
7465041451	574650	4145110	0.023832882	1.16157E-05	0.023844
7466041451	574660	4145110	0.026017639	1.69934E-05	0.026035
7460041451	574600	4145120	0.02744181	3.34903E-05	0.027475
7461041451	574610	4145120	0.028411805	0.000116659	0.028528
7462041451	574620	4145120	0.028866887	4.91914E-05	0.028916
7463041451	574630	4145120	0.028265853	2.16731E-05	0.028288
7464041451	574640	4145120	0.027254156	1.26332E-05	0.027267
7465041451	574650	4145120	0.025919733	7.4993E-06	0.025927
7466041451	574660	4145120	0.02410575	5.51063E-06	0.024111
7460041451	574600	4145130	0.006073804	6.69017E-06	0.00608
7462041451	574620	4145130	0.006508942	7.93613E-06	0.006517
7463041451	574630	4145130	0.007079155	8.23709E-06	0.007087
7464041451	574640	4145130	0.007761778	8.09581E-06	0.00777
7465041451	574650	4145130	0.008481569	8.19098E-06	0.00849
7463041451	574630	4145140	0.009321023	8.13628E-06	0.009329
7464041451	574640	4145140	0.010213056	8.2719E-06	0.010221
7459041451	574590	4145150	0.011221127	8.39072E-06	0.01123
7460041451	574600	4145150	0.012331635	8.84488E-06	0.01234
7460041451	574600	4145160	0.013576312	9.31606E-06	0.013586
7461041451	574610	4145160	0.014884446	9.71834E-06	0.014894
7461041451	574610	4145170	0.016302272	1.01331E-05	0.016312
7457041450	574570	4145030	0.017827975	1.07118E-05	0.017839
7463041450	574630	4145080	0.019436173	1.17499E-05	0.019448
7461041450	574610	4145090	0.020561187	1.37213E-05	0.020575
7462041450	574620	4145090	0.02222559	1.91339E-05	0.022245
7463041450	574630	4145090	0.023550949	4.3391E-05	0.023594
7464041450	574640	4145090	0.024333291	0.000119183	0.024452
7460041451	574600	4145100	0.024704065	3.98891E-05	0.024744
7461041451	574610	4145100	0.024539075	2.01939E-05	0.024559
7462041451	574620	4145100	0.023822004	1.26142E-05	0.023835
7463041451	574630	4145100	0.022752289	8.60852E-06	0.022761
7464041451	574640	4145100	0.021433276	6.24793E-06	0.02144
7465041451	574650	4145100	0	0	0
7459041451	574590	4145110	0	0	0
7460041451	574600	4145110	0	0	0
7461041451	574610	4145110	0	0	0
7462041451	574620	4145110	0	0	0
7463041451	574630	4145110	0	0	0
7464041451	574640	4145110	0	0	0
7465041451	574650	4145110	0	0	0
7466041451	574660	4145110	0	0	0
7460041451	574600	4145120	0	0	0
7461041451	574610	4145120	0	0	0
7462041451	574620	4145120	0	0	0
7463041451	574630	4145120	0	0	0
7464041451	574640	4145120	0	0	0
7465041451	574650	4145120	0	0	0
7466041451	574660	4145120	0	0	0
7460041451	574600	4145130	0	0	0
7462041451	574620	4145130	0	0	0
7463041451	574630	4145130	0	0	0
7464041451	574640	4145130	0	0	0
7465041451	574650	4145130	0	0	0
7463041451	574630	4145140	0	0	0
7464041451	574640	4145140	0	0	0
7459041451	574590	4145150	0	0	0
7460041451	574600	4145150	0	0	0
7460041451	574600	4145160	0	0	0
7461041451	574610	4145160	0	0	0
7461041451	574610	4145170	0	0	0

Max GLC for Chronic Calcs

Max GLC: 0.022704

XY	X	Y	2025	2026	2027	2034	2035
57463041451	574630	4145110	0.002771	0	0		
57464041451	574640	4145110	0.0030091	0	0		
57465041451	574650	4145110	0.0032144	0	0		
57466041451	574660	4145110	0.0035095	0	0		
57460041451	574600	4145120	0.0037033	0	0		
57461041451	574610	4145120	0.003843	0	0		
57462041451	574620	4145120	0.0038971	0	0		
57463041451	574630	4145120	0.0038131	0	0		
57464041451	574640	4145120	0.0036757	0	0		
57465041451	574650	4145120	0.0034952	0	0		
57466041451	574660	4145120	0.0032505	0	0		
57460041451	574600	4145130	0.0008196	0	0		
57462041451	574620	4145130	0.0008784	0	0		
57463041451	574630	4145130	0.0009553	0	0		
57464041451	574640	4145130	0.0010473	0	0		
57465041451	574650	4145130	0.0011444	0	0		
57463041451	574630	4145140	0.0012575	0	0		
57464041451	574640	4145140	0.0013778	0	0		
57459041451	574590	4145150	0.0015137	0	0		
57460041451	574600	4145150	0.0016635	0	0		
57460041451	574600	4145160	0.0018313	0	0		
57461041451	574610	4145160	0.0020077	0	0		
57461041451	574610	4145170	0.0021989	0	0		
57457041450	574570	4145030	0.0024047	0	0		
57463041450	574630	4145080	0.0026216	0	0		
57461041450	574610	4145090	0.0027735	0	0		
57462041450	574620	4145090	0.0029985	0	0		
57463041450	574630	4145090	0.0031798	0	0		
57464041450	574640	4145090	0.0032935	0	0		
57460041451	574600	4145100	0.0033349	0	0		
57461041451	574610	4145100	0.0033105	0	0		
57462041451	574620	4145100	0.003213	0	0		
57463041451	574630	4145100	0.0030683	0	0		
57464041451	574640	4145100	0.0028903	0	0		
57465041451	574650	4145100	0	0	0		
57459041451	574590	4145110	0	0	0		
57460041451	574600	4145110	0	0	0		
57461041451	574610	4145110	0	0	0		
57462041451	574620	4145110	0	0	0		
57463041451	574630	4145110	0	0	0		
57464041451	574640	4145110	0	0	0		
57465041451	574650	4145110	0	0	0		
57466041451	574660	4145110	0	0	0		
57460041451	574600	4145120	0	0	0		
57461041451	574610	4145120	0	0	0		
57462041451	574620	4145120	0	0	0		
57463041451	574630	4145120	0	0	0		
57464041451	574640	4145120	0	0	0		
57465041451	574650	4145120	0	0	0		
57466041451	574660	4145120	0	0	0		
57460041451	574600	4145130	0	0	0		
57462041451	574620	4145130	0	0	0		
57463041451	574630	4145130	0	0	0		
57464041451	574640	4145130	0	0	0		
57465041451	574650	4145130	0	0	0		
57463041451	574630	4145140	0	0	0		
57464041451	574640	4145140	0	0	0		
57459041451	574590	4145150	0	0	0		
57460041451	574600	4145150	0	0	0		
57460041451	574600	4145160	0	0	0		
57461041451	574610	4145160	0	0	0		
57461041451	574610	4145170	0	0	0		

Garvey Reservoir Rehab - Unmitigated Surge Tank Telemetry

Construction Modeling Assumptions

AERMOD Sources

Volume Sources		
Offroad Construction Exhaust		
Release Height	3.66	m
Emissions rate	1	g/s
Init Vert Dimension	3.4	m
Line Volume		
Onroad Hauling Exhaust		
Plume Height	7.315	m
Plume Width	20	m
Release Height	3.66	m
Emissions rate	1	g/s

Meteorology:

SCAQMD	Pico	Rivera	2010 - 2012, 2015 - 2016

SCAQMD Met Data

https://www.aqmd.gov/home/air-quality/meteorological-data/data-for-aermod

AERMOD Sources

Garvey Reservoir Rehab - Unmitigated Surge Tank Telemetry

Health Risk Assessment Risk Factors

Residential Risk	Abbreviation	UOM	3rd Trimester	0<2	2<16	16<30
Daily Breathing Rate (95th %'ile)	DBR	L/kg-day	361	1090	572	261
Fraction Of Time At Home [a]	FAH	unitless	1	1	1	0.73
Exposure Frequency	EF	days/year	0.96	0.96	0.96	0.96
Age Sensitivity Factor	ASF	unitless	10	10	3	1
Inhalation Absorption Factor	A	unitless	1	1	1	1
Conversion Factor	CF_1	m^3/L	0.001	0.001	0.001	0.001
Conversion Factor	CF_2	$\mu g/m^3$	0.001	0.001	0.001	0.001
Cancer Potency Factor (diesel exhaust)	CPF	$mg/kg\text{-}day^{-1}$	1.1	1.1	1.1	1.1
Averaging Time (for residential exposure)	AT	years	70.00	70.00	70.00	70.00

[a] assume school or daycare will have cancer risk of >1 per million

Garvey Reservoir Rehab - Unmitigated Surge Tank Telemetry

Health Risk Assessment Exposure Duration Assumptions for Offroad Equipment

Residential Receptors

			Start Date	*9/30/2025*	*12/30/2025*
			End Date	*12/29/2025*	*12/30/2027*
	9/30/2025	*12/31/2025*	*Days*	*90*	*730*
Phase	Start Date	End Date	Duration (days)	3rd Tri	0<2
Demolition - 2025			1	0	0
Demolition - 2026			1	0	0
Site Preparation - 2025			1	0	0
Site Preparation - 2026			1	0	0
Grading - 2025			1	0	0
Grading - 2026			1	0	0
Infrastructure - 2025	9/30/2025	11/30/2025	62	62	0
Infrastructure - 2026			1	0	0
Paving - 2025	12/1/2025	12/31/2025	31	29	2
Architectural Coating - 2026			1	0	0

			Intake Factor for Inhalation, IF (m^3/kg-day)			Risk Calculation Part 1, R1		
Phase	Year	Year	Equation	3rd Trimester	0<2	Equation	3rd Trimester	0<2
Demolition - 2025		1900		0	0		0	0
Demolition - 2026		1900	$\frac{DBR \cdot FAH \cdot EF \cdot ED \cdot ASF \cdot A \cdot CF_1}{AT}$	0	0		0	0
Site Preparation - 2025		1900		0	0		0	0
Site Preparation - 2026		1900		0	0	$IF \cdot CPF \cdot CF_2$	0	0
Grading - 2025		1900		0	0		0	0
Grading - 2026		1900		0	0		0	0
Infrastructure - 2025		2025		0.008400075	0		9.24008E-06	0
Infrastructure - 2026		1900		0	0		0	0
Paving - 2025		2025		0.003929067	0.000818165		4.32197E-06	8.99981E-07
Architectural Coating - 2026		1900		0	0		0	0

Exposure Durations

Garvey Reservoir Rehab - Unmitigated Surge Tank Telemetry

Offroad DPM Emissions, Ground Level Concentrations and Health Risk Calculations

Residential Receptors

Phase	Year	Emissions (lbs/day)	Work Hours Per Day	Emissions (g/s)
Demolition - 2025	1900		10	0
Demolition - 2026	1900		10	0
Site Preparation - 2025	1900		10	0
Site Preparation - 2026	1900		10	0
Grading - 2025	1900		10	0
Grading - 2026	1900		10	0
Infrastructure - 2025	2025	0.530	10	0.006677853
Infrastructure - 2026	1900		10	0
Paving - 2025	2025	0.440	10	0.005543878
Architectural Coating - 2026	1900		10	0

		AERMOD Column Identifier:	*4*	*4*	*4*	*4*	*4*	*4*	*4*	*4*	*4*	*4*				
Garvey Reservoir Rehab - Unmitigated Surge Tank Telemetry			Demolition - 2025	Demolition - 2026	Site Preparation - 202	Site Preparation - 202	Grading - 2025	Grading - 2026	Infrastructure - 202	Infrastructure - 202	Paving - 2025	Architectural Coating -	Child Risk			
Unique Identifier	X (UTM)	Y (UTM)	1900	1900	1900	1900	1900	1900	2025	1900	2025	1900	3rd Trimester	0<2	Total	per million
396166.283767377.2	396166.28	3767377	0	0	0	0	0	0	0.000346313	0	0.000287506	0	4.44256E-09	2.5875E-10	4.70131E-09	0.0047013
396266.283767377.2	396266.28	3767377	0	0	0	0	0	0	0.000391389	0	0.000324927	0	5.02079E-09	2.92428E-10	5.31322E-09	0.0053132
396366.283767377.2	396366.28	3767377	0	0	0	0	0	0	0.000461974	0	0.000383525	0	5.92626E-09	3.45166E-10	6.27143E-09	0.0062714
396466.283767377.2	396466.28	3767377	0	0	0	0	0	0	0.000535631	0	0.000444674	0	6.87114E-09	4.00199E-10	7.27134E-09	0.0072713
396566.283767377.2	396566.28	3767377	0	0	0	0	0	0	0.000629254	0	0.0005224	0	8.07216E-09	4.7015E-10	8.54231E-09	0.0085423
396666.283767377.2	396666.28	3767377	0	0	0	0	0	0	0.000696366	0	0.000578116	0	8.93308E-09	5.20293E-10	9.45338E-09	0.0094534
396766.283767377.2	396766.28	3767377	0	0	0	0	0	0	0.000743646	0	0.000617366	0	9.53959E-09	5.55618E-10	1.00952E-08	0.0100952
396866.283767377.2	396866.28	3767377	0	0	0	0	0	0	0.000787653	0	0.0006539	0	1.01041E-08	5.88498E-10	1.06926E-08	0.0106926
396966.283767377.2	396966.28	3767377	0	0	0	0	0	0	0.00084348	0	0.000700247	0	1.08203E-08	6.30209E-10	1.14505E-08	0.0114505
397066.283767377.2	397066.28	3767377	0	0	0	0	0	0	0.000873463	0	0.000725139	0	1.12049E-08	6.52612E-10	1.18575E-08	0.0118575
397166.283767377.2	397166.28	3767377	0	0	0	0	0	0	0.000852094	0	0.000707399	0	1.09308E-08	6.36646E-10	1.15674E-08	0.0115674
397266.283767377.2	397266.28	3767377	0	0	0	0	0	0	0.000794531	0	0.000659611	0	1.01924E-08	5.93637E-10	1.0786E-08	0.010786
397366.283767377.2	397366.28	3767377	0	0	0	0	0	0	0.000757536	0	0.000628897	0	9.71777E-09	5.65996E-10	1.02838E-08	0.0102838
397466.283767377.2	397466.28	3767377	0	0	0	0	0	0	0.000704647	0	0.00058499	0	9.03931E-09	5.2648E-10	9.56579E-09	0.0095658
397566.283767377.2	397566.28	3767377	0	0	0	0	0	0	0.000622843	0	0.000517077	0	7.98992E-09	4.6536E-10	8.45528E-09	0.0084553
397666.283767377.2	397666.28	3767377	0	0	0	0	0	0	0.00054538	0	0.000452768	0	6.99621E-09	4.07483E-10	7.4037E-09	0.0074037
397766.283767377.2	397766.28	3767377	0	0	0	0	0	0	0.000460572	0	0.000382361	0	5.90827E-09	3.44118E-10	6.25239E-09	0.0062524
397866.283767377.2	397866.28	3767377	0	0	0	0	0	0	0.000399937	0	0.000332023	0	5.13044E-09	2.98814E-10	5.42926E-09	0.0054293
396166.283767477.2	396166.28	3767477	0	0	0	0	0	0	0.000373025	0	0.000309681	0	4.78521E-09	2.78707E-10	5.06392E-09	0.0050639
396266.283767477.2	396266.28	3767477	0	0	0	0	0	0	0.000419436	0	0.000348211	0	5.38058E-09	3.13383E-10	5.69396E-09	0.005694
396366.283767477.2	396366.28	3767477	0	0	0	0	0	0	0.000508986	0	0.000422554	0	6.52934E-09	3.80291E-10	6.90963E-09	0.0069096
396466.283767477.2	396466.28	3767477	0	0	0	0	0	0	0.000612092	0	0.000508152	0	7.852E-09	4.57327E-10	8.30933E-09	0.0083093
396566.283767477.2	396566.28	3767477	0	0	0	0	0	0	0.000729555	0	0.000605669	0	9.35884E-09	5.4509E-10	9.90393E-09	0.0099039
396666.283767477.2	396666.28	3767477	0	0	0	0	0	0	0.000844548	0	0.000701134	0	1.0834E-08	6.31008E-10	1.1465E-08	0.011465
396766.283767477.2	396766.28	3767477	0	0	0	0	0	0	0.000956269	0	0.000793883	0	1.22671E-08	7.1448E-10	1.29816E-08	0.0129816
396866.283767477.2	396866.28	3767477	0	0	0	0	0	0	0.001056503	0	0.000877097	0	1.3553E-08	7.89371E-10	1.43423E-08	0.0143423
396966.283767477.2	396966.28	3767477	0	0	0	0	0	0	0.001160878	0	0.000963748	0	1.48919E-08	8.67355E-10	1.57593E-08	0.0157593
397066.283767477.2	397066.28	3767477	0	0	0	0	0	0	0.001222114	0	0.001014585	0	1.56774E-08	9.13108E-10	1.65906E-08	0.0165906
397166.283767477.2	397166.28	3767477	0	0	0	0	0	0	0.001201012	0	0.000997066	0	1.54067E-08	8.97341E-10	1.63041E-08	0.0163041
397266.283767477.2	397266.28	3767477	0	0	0	0	0	0	0.001107121	0	0.000919119	0	1.42023E-08	8.2719E-10	1.50295E-08	0.0150295
397366.283767477.2	397366.28	3767477	0	0	0	0	0	0	0.001006419	0	0.000835518	0	1.29105E-08	7.5195E-10	1.36624E-08	0.0136624
397466.283767477.2	397466.28	3767477	0	0	0	0	0	0	0.000909123	0	0.000754744	0	1.16624E-08	6.79255E-10	1.23416E-08	0.0123416
397566.283767477.2	397566.28	3767477	0	0	0	0	0	0	0.000780507	0	0.000647968	0	1.00125E-08	5.83159E-10	1.05956E-08	0.0105956
397666.283767477.2	397666.28	3767477	0	0	0	0	0	0	0.000656299	0	0.000544852	0	8.4191E-09	4.90357E-10	8.90945E-09	0.0089095
397766.283767477.2	397766.28	3767477	0	0	0	0	0	0	0.000551457	0	0.000457813	0	7.07417E-09	4.12023E-10	7.48619E-09	0.0074862
397866.283767477.2	397866.28	3767477	0	0	0	0	0	0	0.000467116	0	0.000387794	0	5.99223E-09	3.49008E-10	6.34123E-09	0.0063412
396166.283767577.2	396166.28	3767577	0	0	0	0	0	0	0.00038805	0	0.000322155	0	4.97796E-09	2.89933E-10	5.26789E-09	0.0052679
396266.283767577.2	396266.28	3767577	0	0	0	0	0	0	0.000448818	0	0.000372604	0	5.7575E-09	3.35337E-10	6.09284E-09	0.0060928
396366.283767577.2	396366.28	3767577	0	0	0	0	0	0	0.000542576	0	0.00045044	0	6.96023E-09	4.05388E-10	7.36562E-09	0.0073656
396466.283767577.2	396466.28	3767577	0	0	0	0	0	0	0.000672794	0	0.000558546	0	8.63069E-09	5.02681E-10	9.13337E-09	0.0091334
396566.283767577.2	396566.28	3767577	0	0	0	0	0	0	0.000845616	0	0.000702021	0	1.08477E-08	6.31806E-10	1.14795E-08	0.0114795

Garvey Reservoir Rehab - Unmitigated Surge Tank Telemetry			Demolition - 2025	Demolition - 2026	ite Preparation - 202	te Preparation - 202	Grading - 2025	Grading - 2026	nfrastructure - 202	nfrastructure - 202	Paving - 2025	itectural Coating -	Child Risk			
Unique Identifier	X (UTM)	Y (UTM)	1900	1900	1900	1900	1900	1900	1900	1900	2025	1900	3rd Trimester	0<2	Total	per million
396666.283767577.2	396666.28	3767577	0	0	0	0	0	0	0.001056102	0	0.000876764	0	1.35478E-08	7.89071E-10	1.43369E-08	0.0143369
396766.283767577.2	396766.28	3767577	0	0	0	0	0	0	0.001222448	0	0.001014862	0	1.56817E-08	9.13357E-10	1.65951E-08	0.0165951
396866.283767577.2	396866.28	3767577	0	0	0	0	0	0	0.001477542	0	0.001226638	0	1.89541E-08	1.10395E-09	2.00581E-08	0.0200581
396966.283767577.2	396966.28	3767577	0	0	0	0	0	0	0.001682952	0	0.001397168	0	2.15891E-08	1.25743E-09	2.28466E-08	0.0228466
397066.283767577.2	397066.28	3767577	0	0	0	0	0	0	0.001802152	0	0.001496126	0	2.31183E-08	1.34649E-09	2.44647E-08	0.0244647
397166.283767577.2	397166.28	3767577	0	0	0	0	0	0	0.001810633	0	0.001503167	0	2.3227E-08	1.35282E-09	2.45799E-08	0.0245799
397266.283767577.2	397266.28	3767577	0	0	0	0	0	0	0.001646825	0	0.001367176	0	2.11257E-08	1.23043E-09	2.23561E-08	0.0223561
397366.283767577.2	397366.28	3767577	0	0	0	0	0	0	0.001416039	0	0.001175579	0	1.81651E-08	1.058E-09	1.92231E-08	0.0192231
397466.283767577.2	397466.28	3767577	0	0	0	0	0	0	0.001219176	0	0.001012146	0	1.56398E-08	9.10912E-10	1.65507E-08	0.0165507
397566.283767577.2	397566.28	3767577	0	0	0	0	0	0	0.000990459	0	0.000822268	0	1.27057E-08	7.40026E-10	1.34458E-08	0.0134458
397666.283767577.2	397666.28	3767577	0	0	0	0	0	0	0.000801276	0	0.00066521	0	1.02789E-08	5.98676E-10	1.08775E-08	0.0108775
397766.283767577.2	397766.28	3767577	0	0	0	0	0	0	0.000650022	0	0.000539641	0	8.33857E-09	4.85667E-10	8.82424E-09	0.0088242
397866.283767577.2	397866.28	3767577	0	0	0	0	0	0	0.000535564	0	0.000444619	0	6.87029E-09	4.00149E-10	7.27043E-09	0.0072704
396166.283767677.2	396166.28	3767677	0	0	0	0	0	0	0.000407282	0	0.000338121	0	5.22467E-09	3.04303E-10	5.52897E-09	0.005529
396266.283767677.2	396266.28	3767677	0	0	0	0	0	0	0.000475864	0	0.000395057	0	6.10445E-09	3.55544E-10	6.45999E-09	0.00646
396366.283767677.2	396366.28	3767677	0	0	0	0	0	0	0.000585648	0	0.000486198	0	7.51277E-09	4.37569E-10	7.95034E-09	0.0079503
396466.283767677.2	396466.28	3767677	0	0	0	0	0	0	0.000746517	0	0.00061975	0	9.57642E-09	5.57763E-10	1.01342E-08	0.0101342
396566.283767677.2	396566.28	3767677	0	0	0	0	0	0	0.000954532	0	0.000792442	0	1.22449E-08	7.13183E-10	1.29581E-08	0.0129581
396666.283767677.2	396666.28	3767677	0	0	0	0	0	0	0.001191863	0	0.000989471	0	1.52894E-08	8.90506E-10	1.61799E-08	0.0161799
396766.283767677.2	396766.28	3767677	0	0	0	0	0	0	0.001593736	0	0.001323102	0	2.04447E-08	1.19077E-09	2.16354E-08	0.0216354
396866.283767677.2	396866.28	3767677	0	0	0	0	0	0	0.002170903	0	0.001802259	0	2.78486E-08	1.622E-09	2.94706E-08	0.0294706
396966.283767677.2	396966.28	3767677	0	0	0	0	0	0	0.00279368	0	0.002319281	0	3.58377E-08	2.08731E-09	3.7925E-08	0.037925
397066.283767677.2	397066.28	3767677	0	0	0	0	0	0	0.003079492	0	0.002556559	0	3.95041E-08	2.30086E-09	4.1805E-08	0.041805
397166.283767677.2	397166.28	3767677	0	0	0	0	0	0	0.003059124	0	0.00253965	0	3.92429E-08	2.28564E-09	4.15285E-08	0.0415285
397266.283767677.2	397266.28	3767677	0	0	0	0	0	0	0.002794815	0	0.002320224	0	3.58523E-08	2.08816E-09	3.79404E-08	0.0379404
397366.283767677.2	397366.28	3767677	0	0	0	0	0	0	0.002143324	0	0.001779363	0	2.74948E-08	1.60139E-09	2.90962E-08	0.0290962
397466.283767677.2	397466.28	3767677	0	0	0	0	0	0	0.001705056	0	0.001415518	0	2.18727E-08	1.27394E-09	2.31466E-08	0.0231466
397566.283767677.2	397566.28	3767677	0	0	0	0	0	0	0.001274268	0	0.001057883	0	1.63465E-08	9.52075E-10	1.72986E-08	0.0172986
397666.283767677.2	397666.28	3767677	0	0	0	0	0	0	0.000971294	0	0.000806357	0	1.24599E-08	7.25706E-10	1.31856E-08	0.0131856
397766.283767677.2	397766.28	3767677	0	0	0	0	0	0	0.000758604	0	0.000629785	0	9.73148E-09	5.66794E-10	1.02983E-08	0.0102983
397866.283767677.2	397866.28	3767677	0	0	0	0	0	0	0.000603277	0	0.000500834	0	7.73892E-09	4.50741E-10	8.18966E-09	0.0081897
396166.283767777.2	396166.28	3767777	0	0	0	0	0	0	0.000418167	0	0.000347158	0	5.36431E-09	3.12435E-10	5.67674E-09	0.0056767
396266.283767777.2	396266.28	3767777	0	0	0	0	0	0	0.00050725	0	0.000421113	0	6.50707E-09	3.78994E-10	6.88606E-09	0.0068861
396366.283767777.2	396366.28	3767777	0	0	0	0	0	0	0.000620506	0	0.000515137	0	7.95994E-09	4.63614E-10	8.42355E-09	0.0084236
396466.283767777.2	396466.28	3767777	0	0	0	0	0	0	0.000790124	0	0.000655952	0	1.01358E-08	5.90344E-10	1.07262E-08	0.0107262
396566.283767777.2	396566.28	3767777	0	0	0	0	0	0	0.001012029	0	0.000840175	0	1.29824E-08	7.56141E-10	1.37386E-08	0.0137386
396666.283767777.2	396666.28	3767777	0	0	0	0	0	0	0.00137517	0	0.001141651	0	1.76409E-08	1.02746E-09	1.86683E-08	0.0186683
396766.283767777.2	396766.28	3767777	0	0	0	0	0	0	0.002044224	0	0.001697092	0	2.62236E-08	1.52735E-09	2.77509E-08	0.0277509
396866.283767777.2	396866.28	3767777	0	0	0	0	0	0	0.003193683	0	0.00265136	0	4.0969E-08	2.38617E-09	4.33552E-08	0.0433552
396966.283767777.2	396966.28	3767777	0	0	0	0	0	0	0.004894399	0	0.004063274	0	6.2786E-08	3.65687E-09	6.64429E-08	0.0664429
397066.283767777.2	397066.28	3767777	0	0	0	0	0	0	0.006353109	0	0.005274279	0	8.14985E-08	4.74675E-09	8.62453E-08	0.0862453
397166.283767777.2	397166.28	3767777	0	0	0	0	0	0	0.00642523	0	0.005334153	0	8.24237E-08	4.80064E-09	8.72244E-08	0.0872244
397266.283767777.2	397266.28	3767777	0	0	0	0	0	0	0.005273634	0	0.004378111	0	6.76509E-08	3.94022E-09	7.15911E-08	0.0715911
397366.283767777.2	397366.28	3767777	0	0	0	0	0	0	0.003484704	0	0.002892962	0	4.47023E-08	2.60361E-09	4.73059E-08	0.0473059
397466.283767777.2	397466.28	3767777	0	0	0	0	0	0	0.00239194	0	0.001985762	0	3.06841E-08	1.78715E-09	3.24713E-08	0.0324713
397566.283767777.2	397566.28	3767777	0	0	0	0	0	0	0.001633002	0	0.0013557	0	2.09484E-08	1.2201E-09	2.21685E-08	0.0221685
397666.283767777.2	397666.28	3767777	0	0	0	0	0	0	0.001159943	0	0.000962972	0	1.48799E-08	8.66656E-10	1.57466E-08	0.0157466
397766.283767777.2	397766.28	3767777	0	0	0	0	0	0	0.00087373	0	0.000725361	0	1.12083E-08	6.52811E-10	1.18611E-08	0.0118611
397866.283767777.2	397866.28	3767777	0	0	0	0	0	0	0.000679071	0	0.000563757	0	8.71121E-09	5.07371E-10	9.21858E-09	0.0092186
396166.283767877.2	396166.28	3767877	0	0	0	0	0	0	0.000422842	0	0.000351038	0	5.42427E-09	3.15928E-10	5.7402E-09	0.0057402
396266.283767877.2	396266.28	3767877	0	0	0	0	0	0	0.000515931	0	0.00042832	0	6.61843E-09	3.8548E-10	7.00391E-09	0.0070039
396366.283767877.2	396366.28	3767877	0	0	0	0	0	0	0.000641808	0	0.000532822	0	8.23321E-09	4.7953E-10	8.71274E-09	0.0087127
396466.283767877.2	396466.28	3767877	0	0	0	0	0	0	0.000811827	0	0.000673969	0	1.04142E-08	6.0656E-10	1.10208E-08	0.0110208
396566.283767877.2	396566.28	3767877	0	0	0	0	0	0	0.001065251	0	0.000884359	0	1.36652E-08	7.95907E-10	1.44611E-08	0.0144611
397466.283767877.2	397466.28	3767877	0	0	0	0	0	0	0.003160093	0	0.002623474	0	4.05381E-08	2.36108E-09	4.28992E-08	0.0428992
397566.283767877.2	397566.28	3767877	0	0	0	0	0	0	0.002024391	0	0.001680627	0	2.59692E-08	1.51253E-09	2.74817E-08	0.0274817
397666.283767877.2	397666.28	3767877	0	0	0	0	0	0	0.001375571	0	0.001141983	0	1.7646E-08	1.02776E-09	1.86738E-08	0.0186738
397766.283767877.2	397766.28	3767877	0	0	0	0	0	0	0.000993063	0	0.00082443	0	1.27392E-08	7.41972E-10	1.34811E-08	0.0134811
397866.283767877.2	397866.28	3767877	0	0	0	0	0	0	0.000742177	0	0.000616147	0	9.52074E-09	5.5452E-10	1.00753E-08	0.0100753
396166.283767977.2	396166.28	3767977	0	0	0	0	0	0	0.000417499	0	0.000346603	0	5.35574E-09	3.11936E-10	5.66768E-09	0.0056677
396266.283767977.2	396266.28	3767977	0	0	0	0	0	0	0.000512191	0	0.000425215	0	6.57046E-09	3.82686E-10	6.95315E-09	0.0069531
396366.283767977.2	396366.28	3767977	0	0	0	0	0	0	0.000638403	0	0.000529995	0	8.18952E-09	4.76985E-10	8.6665E-09	0.0086665
396466.283767977.2	396466.28	3767977	0	0	0	0	0	0	0.000806685	0	0.0006697	0	1.03483E-08	6.02718E-10	1.0951E-08	0.010951
397466.283767977.2	397466.28	3767977	0	0	0	0	0	0	0.004296464	0	0.003566876	0	5.51156E-08	3.21012E-09	5.83257E-08	0.0583257
397566.283767977.2	397566.28	3767977	0	0	0	0	0	0	0.002456114	0	0.002039038	0	3.15074E-08	1.8351E-09	3.33425E-08	0.0333425
397666.283767977.2	397666.28	3767977	0	0	0	0	0	0	0.001582918	0	0.001314121	0	2.03059E-08	1.18268E-09	2.14886E-08	0.0214886
397766.283767977.2	397766.28	3767977	0	0	0	0	0	0	0.001085351	0	0.000901046	0	1.3923E-08	8.10925E-10	1.4734E-08	0.014734
397866.283767977.2	397866.28	3767977	0	0	0	0	0	0	0.000786117	0	0.000652625	0	1.00844E-08	5.87351E-10	1.06718E-08	0.0106718
396166.283768077.2	396166.28	3768077	0	0	0	0	0	0	0.000420905	0	0.000349431	0	5.39943E-09	3.14481E-10	5.71391E-09	0.0057139

Garvey Reservoir Rehab - Unmitigated Surge Tank Telemetry			Demolition - 2025	Demolition - 2026	ite Preparation - 202	te Preparation - 202	Grading - 2025	Grading - 2026	nfrastructure - 202	nfrastructure - 202	Paving - 2025	itectural Coating -	Child Risk			
Unique Identifier	X (UTM)	Y (UTM)	1900	1900	1900	1900	1900	1900	2025	1900	2025	1900	3rd Trimester	0<2	Total	per million
396266.283768077.2	396266.28	3768077	0	0	0	0	0	0	0.000501039	0	0.000415957	0	6.4274E-09	3.74354E-10	6.80175E-09	0.0068018
396366.283768077.2	396366.28	3768077	0	0	0	0	0	0	0.000621908	0	0.000516301	0	7.97793E-09	4.64662E-10	8.44259E-09	0.0084426
396466.283768077.2	396466.28	3768077	0	0	0	0	0	0	0.000799072	0	0.00066338	0	1.02506E-08	5.9703E-10	1.08476E-08	0.0108476
397466.283768077.2	397466.28	3768077	0	0	0	0	0	0	0.005297407	0	0.004397847	0	6.79559E-08	3.95798E-09	7.19138E-08	0.0719138
397566.283768077.2	397566.28	3768077	0	0	0	0	0	0	0.002837286	0	0.002355483	0	3.63971E-08	2.11989E-09	3.8517E-08	0.038517
397666.283768077.2	397666.28	3768077	0	0	0	0	0	0	0.001771367	0	0.001470569	0	2.27233E-08	1.32348E-09	2.40468E-08	0.0240468
397766.283768077.2	397766.28	3768077	0	0	0	0	0	0	0.001217506	0	0.00101076	0	1.56183E-08	9.09665E-10	1.6528E-08	0.016528
397866.283768077.2	397866.28	3768077	0	0	0	0	0	0	0.000871059	0	0.000723143	0	1.11741E-08	6.50816E-10	1.18249E-08	0.0118249
396166.283768177.2	396166.28	3768177	0	0	0	0	0	0	0.000412892	0	0.000342778	0	5.29663E-09	3.08494E-10	5.60512E-09	0.0056051
396266.283768177.2	396266.28	3768177	0	0	0	0	0	0	0.000492959	0	0.000409249	0	6.32375E-09	3.68316E-10	6.69206E-09	0.0066921
396366.283768177.2	396366.28	3768177	0	0	0	0	0	0	0.000608085	0	0.000504826	0	7.8006E-09	4.54333E-10	8.25493E-09	0.0082549
396466.283768177.2	396466.28	3768177	0	0	0	0	0	0	0.00076388	0	0.000634164	0	9.79915E-09	5.70736E-10	1.03699E-08	0.0103699
397466.283768177.2	397466.28	3768177	0	0	0	0	0	0	0.005428026	0	0.004506286	0	6.96315E-08	4.05557E-09	7.3687E-08	0.073687
397566.283768177.2	397566.28	3768177	0	0	0	0	0	0	0.003075953	0	0.002553621	0	3.94587E-08	2.29821E-09	4.1757E-08	0.041757
397666.283768177.2	397666.28	3768177	0	0	0	0	0	0	0.001926026	0	0.001598965	0	2.47073E-08	1.43904E-09	2.61464E-08	0.0261464
397766.283768177.2	397766.28	3768177	0	0	0	0	0	0	0.001334502	0	0.001107889	0	1.71192E-08	9.97079E-10	1.81163E-08	0.0181163
397866.283768177.2	397866.28	3768177	0	0	0	0	0	0	0.000939106	0	0.000779636	0	1.2047E-08	7.01657E-10	1.27486E-08	0.0127486
396166.283768277.2	396166.28	3768277	0	0	0	0	0	0	0.000400003	0	0.000332078	0	5.1313E-09	2.98864E-10	5.43016E-09	0.0054302
396266.283768277.2	396266.28	3768277	0	0	0	0	0	0	0.000468385	0	0.000388848	0	6.0085E-09	3.49956E-10	6.35846E-09	0.0063585
396366.283768277.2	396366.28	3768277	0	0	0	0	0	0	0.000572359	0	0.000475166	0	7.3423E-09	4.2764E-10	7.76994E-09	0.0077699
396466.283768277.2	396466.28	3768277	0	0	0	0	0	0	0.000712059	0	0.000591144	0	9.1344E-09	5.32018E-10	9.66641E-09	0.0096664
397366.283768277.2	397366.28	3768277	0	0	0	0	0	0	0.007570415	0	0.006284872	0	9.71143E-08	5.65627E-09	1.02771E-07	0.1027706
397466.283768277.2	397466.28	3768277	0	0	0	0	0	0	0.004705683	0	0.003906604	0	6.03651E-08	3.51587E-09	6.3881E-08	0.063881
397566.283768277.2	397566.28	3768277	0	0	0	0	0	0	0.003044099	0	0.002527177	0	3.90501E-08	2.27441E-09	4.13245E-08	0.0413245
397666.283768277.2	397666.28	3768277	0	0	0	0	0	0	0.001984524	0	0.00164753	0	2.54577E-08	1.48275E-09	2.69405E-08	0.0269405
397766.283768277.2	397766.28	3768277	0	0	0	0	0	0	0.001377441	0	0.001143536	0	1.767E-08	1.02916E-09	1.86992E-08	0.0186992
397866.283768277.2	397866.28	3768277	0	0	0	0	0	0	0.001021845	0	0.000848324	0	1.31084E-08	7.63476E-10	1.38718E-08	0.0138718
396166.283768377.2	396166.28	3768377	0	0	0	0	0	0	0.000381439	0	0.000316666	0	4.89315E-09	2.84994E-10	5.17814E-09	0.0051781
396266.283768377.2	396266.28	3768377	0	0	0	0	0	0	0.000443677	0	0.000368335	0	5.69154E-09	3.31495E-10	6.02304E-09	0.006023
396366.283768377.2	396366.28	3768377	0	0	0	0	0	0	0.000533026	0	0.000442512	0	6.83773E-09	3.98253E-10	7.23599E-09	0.007236
396466.283768377.2	396466.28	3768377	0	0	0	0	0	0	0.000653428	0	0.000542468	0	8.38226E-09	4.88211E-10	8.87047E-09	0.0088705
397266.283768377.2	397266.28	3768377	0	0	0	0	0	0	0.006106229	0	0.005069322	0	7.83315E-08	4.56229E-09	8.28938E-08	0.0828938
397366.283768377.2	397366.28	3768377	0	0	0	0	0	0	0.005108624	0	0.004241122	0	6.55341E-08	3.81693E-09	6.93511E-08	0.0693511
397466.283768377.2	397466.28	3768377	0	0	0	0	0	0	0.003793555	0	0.003149366	0	4.86642E-08	2.83437E-09	5.14986E-08	0.0514986
397566.283768377.2	397566.28	3768377	0	0	0	0	0	0	0.002750541	0	0.002283468	0	3.52843E-08	2.05508E-09	3.73394E-08	0.0373394
397666.283768377.2	397666.28	3768377	0	0	0	0	0	0	0.001969766	0	0.001635278	0	2.52684E-08	1.47172E-09	2.67401E-08	0.0267401
397766.283768377.2	397766.28	3768377	0	0	0	0	0	0	0.001423117	0	0.001181456	0	1.82559E-08	1.06329E-09	1.93192E-08	0.0193192
397866.283768377.2	397866.28	3768377	0	0	0	0	0	0	0.001086954	0	0.000902377	0	1.39436E-08	8.12122E-10	1.47557E-08	0.0147557
396166.283768477.2	396166.28	3768477	0	0	0	0	0	0	0.000359335	0	0.000298316	0	4.6096E-09	2.68479E-10	4.87808E-09	0.0048781
396266.283768477.2	396266.28	3768477	0	0	0	0	0	0	0.000417833	0	0.00034688	0	5.36002E-09	3.12186E-10	5.67221E-09	0.0056722
396366.283768477.2	396366.28	3768477	0	0	0	0	0	0	0.000496498	0	0.000412187	0	6.36915E-09	3.70961E-10	6.74011E-09	0.0067401
396466.283768477.2	396466.28	3768477	0	0	0	0	0	0	0.000590656	0	0.000490356	0	7.57702E-09	4.41311E-10	8.01833E-09	0.0080183
397166.283768477.2	397166.28	3768477	0	0	0	0	0	0	0.003405905	0	0.002827544	0	4.36914E-08	2.54474E-09	4.62362E-08	0.0462362
397266.283768477.2	397266.28	3768477	0	0	0	0	0	0	0.003857595	0	0.003202532	0	4.94858E-08	2.88222E-09	5.2368E-08	0.052368
397366.283768477.2	397366.28	3768477	0	0	0	0	0	0	0.003589747	0	0.002980167	0	4.60498E-08	2.68209E-09	4.87319E-08	0.0487319
397466.283768477.2	397466.28	3768477	0	0	0	0	0	0	0.002971711	0	0.002467081	0	3.81215E-08	2.22033E-09	4.03418E-08	0.0403418
397566.283768477.2	397566.28	3768477	0	0	0	0	0	0	0.002265729	0	0.001880982	0	2.90651E-08	1.69285E-09	3.07579E-08	0.0307579
397666.283768477.2	397666.28	3768477	0	0	0	0	0	0	0.001731968	0	0.00143786	0	2.22179E-08	1.29405E-09	2.3512E-08	0.023512
397766.283768477.2	397766.28	3768477	0	0	0	0	0	0	0.001374903	0	0.001141429	0	1.76374E-08	1.02726E-09	1.86647E-08	0.0186647
397866.283768477.2	397866.28	3768477	0	0	0	0	0	0	0.001055435	0	0.00087621	0	1.35393E-08	7.88572E-10	1.43278E-08	0.0143278
396166.283768577.2	396166.28	3768577	0	0	0	0	0	0	0.000329686	0	0.000273701	0	4.22925E-09	2.46326E-10	4.47558E-09	0.0044756
396266.283768577.2	396266.28	3768577	0	0	0	0	0	0	0.000388384	0	0.000322432	0	4.98224E-09	2.90183E-10	5.27242E-09	0.0052724
396366.283768577.2	396366.28	3768577	0	0	0	0	0	0	0.000454294	0	0.00037715	0	5.82775E-09	3.39428E-10	6.16718E-09	0.0061672
396466.283768577.2	396466.28	3768577	0	0	0	0	0	0	0.000533026	0	0.000442512	0	6.83773E-09	3.98253E-10	7.23599E-09	0.007236
396566.283768577.2	396566.28	3768577	0	0	0	0	0	0	0.000651024	0	0.000540473	0	8.35142E-09	4.86415E-10	8.83784E-09	0.0088378
396866.283768577.2	396866.28	3768577	0	0	0	0	0	0	0.001267857	0	0.001052561	0	1.62642E-08	9.47285E-10	1.72115E-08	0.0172115
396966.283768577.2	396966.28	3768577	0	0	0	0	0	0	0.001591933	0	0.001321605	0	2.04215E-08	1.18942E-09	2.1611E-08	0.021611
397066.283768577.2	397066.28	3768577	0	0	0	0	0	0	0.001954741	0	0.001622804	0	2.50757E-08	1.46049E-09	2.65362E-08	0.0265362
397166.283768577.2	397166.28	3768577	0	0	0	0	0	0	0.002345128	0	0.001946899	0	3.00836E-08	1.75217E-09	3.18358E-08	0.0318358
397266.283768577.2	397266.28	3768577	0	0	0	0	0	0	0.002560356	0	0.002125578	0	3.28446E-08	1.91298E-09	3.47576E-08	0.0347576
397366.283768577.2	397366.28	3768577	0	0	0	0	0	0	0.002547734	0	0.0021151	0	3.26827E-08	1.90355E-09	3.45862E-08	0.0345862
397466.283768577.2	397466.28	3768577	0	0	0	0	0	0	0.002265929	0	0.001881149	0	2.90676E-08	1.693E-09	3.07606E-08	0.0307606
397566.283768577.2	397566.28	3768577	0	0	0	0	0	0	0.001879348	0	0.001560214	0	2.41085E-08	1.40416E-09	2.55127E-08	0.0255127
397666.283768577.2	397666.28	3768577	0	0	0	0	0	0	0.001513802	0	0.001256742	0	1.94193E-08	1.13104E-09	2.05503E-08	0.0205503
397766.283768577.2	397766.28	3768577	0	0	0	0	0	0	0.001204751	0	0.001000171	0	1.54547E-08	9.00135E-10	1.63549E-08	0.0163549
397866.283768577.2	397866.28	3768577	0	0	0	0	0	0	0.000976169	0	0.000810404	0	1.25224E-08	7.29348E-10	1.32518E-08	0.0132518
396166.283768677.2	396166.28	3768677	0	0	0	0	0	0	0.000305979	0	0.00025402	0	3.92514E-09	2.28614E-10	4.15376E-09	0.0041538
396266.283768677.2	396266.28	3768677	0	0	0	0	0	0	0.000352123	0	0.000292329	0	4.51708E-09	2.6309E-10	4.78017E-09	0.0047802
396366.283768677.2	396366.28	3768677	0	0	0	0	0	0	0.000413359	0	0.000343166	0	5.30263E-09	3.08843E-10	5.61147E-09	0.0056115

Garvey Reservoir Rehab - Unmitigated Surge Tank Telemetry			Demolition - 2025	Demolition - 2026	ite Preparation - 202	te Preparation - 202	Grading - 2025	Grading - 2026	nfrastructure - 202	nfrastructure - 202	Paving - 2025	itectural Coating -	Child Risk			
Unique Identifier	X (UTM)	Y (UTM)	1900	1900	1900	1900	1900	1900	2025	1900	2025	1900	3rd Trimester	0<2	Total	per million
396466.283768677.2	396466.28	3768677	0	0	0	0	0	0	0.000478936	0	0.000397607	0	6.14385E-09	3.57839E-10	6.50169E-09	0.0065017
396566.283768677.2	396566.28	3768677	0	0	0	0	0	0	0.000572426	0	0.000475221	0	7.34315E-09	4.2769E-10	7.77084E-09	0.0077708
396666.283768677.2	396666.28	3768677	0	0	0	0	0	0	0.00068822	0	0.000571352	0	8.82857E-09	5.14206E-10	9.34278E-09	0.0093428
396766.283768677.2	396766.28	3768677	0	0	0	0	0	0	0.000829924	0	0.000688993	0	1.06464E-08	6.20081E-10	1.12665E-08	0.0112665
396866.283768677.2	396866.28	3768677	0	0	0	0	0	0	0.001007488	0	0.000836405	0	1.29242E-08	7.52749E-10	1.36769E-08	0.0136769
396966.283768677.2	396966.28	3768677	0	0	0	0	0	0	0.001216638	0	0.001010039	0	1.56072E-08	9.09016E-10	1.65162E-08	0.0165162
397066.283768677.2	397066.28	3768677	0	0	0	0	0	0	0.001456907	0	0.001209508	0	1.86894E-08	1.08853E-09	1.97779E-08	0.0197779
397166.283768677.2	397166.28	3768677	0	0	0	0	0	0	0.001677811	0	0.001392899	0	2.15232E-08	1.25358E-09	2.27768E-08	0.0227768
397366.283768677.2	397366.28	3768677	0	0	0	0	0	0	0.001871535	0	0.001553727	0	2.40083E-08	1.39833E-09	2.54066E-08	0.0254066
397466.283768677.2	397466.28	3768677	0	0	0	0	0	0	0.001739581	0	0.00144418	0	2.23156E-08	1.29974E-09	2.36153E-08	0.0236153
397566.283768677.2	397566.28	3768677	0	0	0	0	0	0	0.001524954	0	0.001266	0	1.95623E-08	1.13938E-09	2.07017E-08	0.0207017
397666.283768677.2	397666.28	3768677	0	0	0	0	0	0	0.001290028	0	0.001070966	0	1.65487E-08	9.6385E-10	1.75125E-08	0.0175125
397766.283768677.2	397766.28	3768677	0	0	0	0	0	0	0.001064917	0	0.000884082	0	1.36609E-08	7.95657E-10	1.44566E-08	0.0144566
397866.283768677.2	397866.28	3768677	0	0	0	0	0	0	0.000888889	0	0.000737946	0	1.14028E-08	6.64137E-10	1.20669E-08	0.0120669
396166.283768777.2	396166.28	3768777	0	0	0	0	0	0	0.000286881	0	0.000238165	0	3.68014E-09	2.14344E-10	3.89449E-09	0.0038945
396266.283768777.2	396266.28	3768777	0	0	0	0	0	0	0.00032421	0	0.000269155	0	4.15901E-09	2.42235E-10	4.40124E-09	0.0044012
396366.283768777.2	396366.28	3768777	0	0	0	0	0	0	0.000376965	0	0.000312952	0	4.83576E-09	2.81651E-10	5.11741E-09	0.0051174
396466.283768777.2	396466.28	3768777	0	0	0	0	0	0	0.000433793	0	0.00036013	0	5.56476E-09	3.24111E-10	5.88887E-09	0.0058889
396566.283768777.2	396566.28	3768777	0	0	0	0	0	0	0.000501507	0	0.000416345	0	6.4334E-09	3.74703E-10	6.8081E-09	0.0068081
396666.283768777.2	396666.28	3768777	0	0	0	0	0	0	0.000589521	0	0.000489414	0	7.56245E-09	4.40463E-10	8.00292E-09	0.0080029
396766.283768777.2	396766.28	3768777	0	0	0	0	0	0	0.000696567	0	0.000578282	0	8.93565E-09	5.20443E-10	9.4561E-09	0.0094561
396866.283768777.2	396866.28	3768777	0	0	0	0	0	0	0.000821376	0	0.000681897	0	1.05367E-08	6.13694E-10	1.11504E-08	0.0111504
396966.283768777.2	396966.28	3768777	0	0	0	0	0	0	0.00096308	0	0.000799538	0	1.23545E-08	7.19569E-10	1.30741E-08	0.0130741
397066.283768777.2	397066.28	3768777	0	0	0	0	0	0	0.00112061	0	0.000930318	0	1.43753E-08	8.37269E-10	1.52126E-08	0.0152126
397166.283768777.2	397166.28	3768777	0	0	0	0	0	0	0.00126385	0	0.001049234	0	1.62128E-08	9.44291E-10	1.71571E-08	0.0171571
397266.283768777.2	397266.28	3768777	0	0	0	0	0	0	0.00138512	0	0.001149911	0	1.77685E-08	1.0349E-09	1.88034E-08	0.0188034
397366.283768777.2	397366.28	3768777	0	0	0	0	0	0	0.001411832	0	0.001172087	0	1.81112E-08	1.05486E-09	1.9166E-08	0.019166
397466.283768777.2	397466.28	3768777	0	0	0	0	0	0	0.001342315	0	0.001114375	0	1.72194E-08	1.00292E-09	1.82223E-08	0.0182223
397566.283768777.2	397566.28	3768777	0	0	0	0	0	0	0.001215503	0	0.001009097	0	1.55926E-08	9.08168E-10	1.65008E-08	0.0165008
397666.283768777.2	397666.28	3768777	0	0	0	0	0	0	0.001067789	0	0.000886466	0	1.36977E-08	7.97803E-10	1.44955E-08	0.0144955
397766.283768777.2	397766.28	3768777	0	0	0	0	0	0	0.000920676	0	0.000764334	0	1.18106E-08	6.87887E-10	1.24984E-08	0.0124984
397866.283768777.2	397866.28	3768777	0	0	0	0	0	0	0.000792194	0	0.00065767	0	1.01624E-08	5.91891E-10	1.07543E-08	0.0107543
396166.283768877.2	396166.28	3768877	0	0	0	0	0	0	0.000265178	0	0.000220147	0	3.40173E-09	1.98129E-10	3.59986E-09	0.0035999
396266.283768877.2	396266.28	3768877	0	0	0	0	0	0	0.000300704	0	0.000249641	0	3.85747E-09	2.24672E-10	4.08214E-09	0.0040821
396366.283768877.2	396366.28	3768877	0	0	0	0	0	0	0.000338767	0	0.000281241	0	4.34576E-09	2.53112E-10	4.59887E-09	0.0045989
396466.283768877.2	396466.28	3768877	0	0	0	0	0	0	0.000393459	0	0.000326645	0	5.04735E-09	2.93975E-10	5.34132E-09	0.0053413
396566.283768877.2	396566.28	3768877	0	0	0	0	0	0	0.000449152	0	0.000372881	0	5.76179E-09	3.35586E-10	6.09737E-09	0.0060974
396666.283768877.2	396666.28	3768877	0	0	0	0	0	0	0.000513594	0	0.00042638	0	6.58845E-09	3.83734E-10	6.97218E-09	0.0069722
396766.283768877.2	396766.28	3768877	0	0	0	0	0	0	0.000594262	0	0.00049335	0	7.62328E-09	4.44005E-10	8.06728E-09	0.0080673
396866.283768877.2	396866.28	3768877	0	0	0	0	0	0	0.000697902	0	0.000579391	0	8.95279E-09	5.21441E-10	9.47423E-09	0.0094742
396966.283768877.2	396966.28	3768877	0	0	0	0	0	0	0.00079787	0	0.000662383	0	1.02352E-08	5.96132E-10	1.08313E-08	0.0108313
397066.283768877.2	397066.28	3768877	0	0	0	0	0	0	0.000896569	0	0.000744321	0	1.15013E-08	6.69875E-10	1.21712E-08	0.0121712
397166.283768877.2	397166.28	3768877	0	0	0	0	0	0	0.000995267	0	0.00082626	0	1.27674E-08	7.43618E-10	1.3511E-08	0.013511
397266.283768877.2	397266.28	3768877	0	0	0	0	0	0	0.001077872	0	0.000894837	0	1.38271E-08	8.05337E-10	1.46324E-08	0.0146324
397366.283768877.2	397366.28	3768877	0	0	0	0	0	0	0.001100844	0	0.000913908	0	1.41218E-08	8.225E-10	1.49443E-08	0.0149443
397466.283768877.2	397466.28	3768877	0	0	0	0	0	0	0.001072663	0	0.000890513	0	1.37603E-08	8.01445E-10	1.45617E-08	0.0145617
397566.283768877.2	397566.28	3768877	0	0	0	0	0	0	0.000999541	0	0.000829808	0	1.28222E-08	7.46811E-10	1.35691E-08	0.0135691
397666.283768877.2	397666.28	3768877	0	0	0	0	0	0	0.000895567	0	0.000743489	0	1.14885E-08	6.69127E-10	1.21576E-08	0.0121576
397766.283768877.2	397766.28	3768877	0	0	0	0	0	0	0.000792661	0	0.000658058	0	1.01684E-08	5.9224E-10	1.07606E-08	0.0107606
397866.283768877.2	397866.28	3768877	0	0	0	0	0	0	0.000700507	0	0.000581553	0	8.9862E-09	5.23387E-10	9.50958E-09	0.0095096
3964253767739	396425	3767739	0	0	0	0	0	0	0.00070458	0	0.000584935	0	9.03845E-09	5.2643E-10	9.56488E-09	0.0095649
3964753767739	396475	3767739	0	0	0	0	0	0	0.000797202	0	0.000661828	0	1.02266E-08	5.95633E-10	1.08222E-08	0.0108222
3965253767739	396525	3767739	0	0	0	0	0	0	0.000893163	0	0.000741494	0	1.14576E-08	6.6733E-10	1.21249E-08	0.0121249
3965753767739	396575	3767739	0	0	0	0	0	0	0.001028256	0	0.000853646	0	1.31906E-08	7.68266E-10	1.39589E-08	0.0139589
3966253767739	396625	3767739	0	0	0	0	0	0	0.00115026	0	0.000954933	0	1.47557E-08	8.59422E-10	1.56151E-08	0.0156151
3966753767739	396675	3767739	0	0	0	0	0	0	0.001340111	0	0.001112545	0	1.71911E-08	1.00127E-09	1.81924E-08	0.0181924
3967253767739	396725	3767739	0	0	0	0	0	0	0.001631667	0	0.001354591	0	2.09312E-08	1.21911E-09	2.21503E-08	0.0221503
3967753767739	396775	3767739	0	0	0	0	0	0	0.001912337	0	0.0015876	0	2.45317E-08	1.42881E-09	2.59605E-08	0.0259605
3968253767739	396825	3767739	0	0	0	0	0	0	0.00233992	0	0.001942575	0	3.00168E-08	1.74828E-09	3.17651E-08	0.0317651
3968753767739	396875	3767739	0	0	0	0	0	0	0.00287949	0	0.00239052	0	3.69385E-08	2.15142E-09	3.90899E-08	0.0390899
3969253767739	396925	3767739	0	0	0	0	0	0	0.003435421	0	0.002852048	0	4.40701E-08	2.56679E-09	4.66368E-08	0.0466368
3969753767739	396975	3767739	0	0	0	0	0	0	0.003999566	0	0.003320395	0	5.1307E-08	2.98829E-09	5.42953E-08	0.0542953
3970253767739	397025	3767739	0	0	0	0	0	0	0.004457734	0	0.00370076	0	5.71844E-08	3.33061E-09	6.0515E-08	0.060515
3970753767739	397075	3767739	0	0	0	0	0	0	0.004706016	0	0.003906882	0	6.03694E-08	3.51612E-09	6.38855E-08	0.0638855
3971253767739	397125	3767739	0	0	0	0	0	0	0.004753563	0	0.003946354	0	6.09794E-08	3.55164E-09	6.4531E-08	0.064531
3971753767739	397175	3767739	0	0	0	0	0	0	0.004627685	0	0.003841852	0	5.93646E-08	3.45759E-09	6.28222E-08	0.0628222
3972253767739	397225	3767739	0	0	0	0	0	0	0.004307749	0	0.003576245	0	5.52604E-08	3.21855E-09	5.84789E-08	0.0584789
3972753767739	397275	3767739	0	0	0	0	0	0	0.003948748	0	0.003278206	0	5.06551E-08	2.95032E-09	5.36054E-08	0.0536054
3973253767739	397325	3767739	0	0	0	0	0	0	0.003337858	0	0.002771052	0	4.28185E-08	2.49389E-09	4.53124E-08	0.0453124

Garvey Reservoir Rehab - Unmitigated Surge Tank Telemetry			Demolition - 2025	Demolition - 2026	ite Preparation - 202	te Preparation - 202	Grading - 2025	Grading - 2026	nfrastructure - 202	nfrastructure - 202	Paving - 2025	itectural Coating -	Child Risk			
Unique Identifier	X (UTM)	Y (UTM)	1900	1900	1900	1900	1900	1900	2025	1900	2025	1900	3rd Trimester	0<2	Total	per million
3973753767739	397375	3767739	0	0	0	0	0	0	0.002774648	0	0.002303481	0	3.55936E-08	2.07309E-09	3.76667E-08	0.0376667
3974253767739	397425	3767739	0	0	0	0	0	0	0.002326898	0	0.001931764	0	2.98498E-08	1.73855E-09	3.15883E-08	0.0315883
3974753767739	397475	3767739	0	0	0	0	0	0	0.00203581	0	0.001690107	0	2.61157E-08	1.52106E-09	2.76367E-08	0.0276367
3975253767739	397525	3767739	0	0	0	0	0	0	0.001709931	0	0.001419565	0	2.19352E-08	1.27758E-09	2.32128E-08	0.0232128
3964253767789	396425	3767789	0	0	0	0	0	0	0.000721075	0	0.000598628	0	9.25004E-09	5.38754E-10	9.7888E-09	0.0097888
3964753767789	396475	3767789	0	0	0	0	0	0	0.000810892	0	0.000673193	0	1.04022E-08	6.05861E-10	1.10081E-08	0.0110081
3965253767789	396525	3767789	0	0	0	0	0	0	0.000913797	0	0.000758624	0	1.17223E-08	6.82748E-10	1.24051E-08	0.0124051
3965753767789	396575	3767789	0	0	0	0	0	0	0.001040209	0	0.00086357	0	1.33439E-08	7.77197E-10	1.41211E-08	0.0141211
3966253767789	396625	3767789	0	0	0	0	0	0	0.001211563	0	0.001005826	0	1.55421E-08	9.05224E-10	1.64473E-08	0.0164473
3966753767789	396675	3767789	0	0	0	0	0	0	0.001442817	0	0.00119781	0	1.85087E-08	1.07801E-09	1.95867E-08	0.0195867
3967253767789	396725	3767789	0	0	0	0	0	0	0.001783321	0	0.001480493	0	2.28767E-08	1.33242E-09	2.42091E-08	0.0242091
3967753767789	396775	3767789	0	0	0	0	0	0	0.002171571	0	0.001802814	0	2.78572E-08	1.6225E-09	2.94797E-08	0.0294797
3968253767789	396825	3767789	0	0	0	0	0	0	0.002732644	0	0.00226861	0	3.50547E-08	2.04171E-09	3.70964E-08	0.0370964
3968753767789	396875	3767789	0	0	0	0	0	0	0.00345265	0	0.002866351	0	4.42911E-08	2.57966E-09	4.68707E-08	0.0468707
3969253767789	396925	3767789	0	0	0	0	0	0	0.004328384	0	0.003593375	0	5.55251E-08	3.23397E-09	5.87591E-08	0.0587591
3969753767789	396975	3767789	0	0	0	0	0	0	0.005427625	0	0.004505953	0	6.96263E-08	4.05527E-09	7.36816E-08	0.0736816
3970253767789	397025	3767789	0	0	0	0	0	0	0.006446332	0	0.005351672	0	8.26944E-08	4.8164E-09	8.75108E-08	0.0875108
3970753767789	397075	3767789	0	0	0	0	0	0	0.00712173	0	0.005912379	0	9.13585E-08	5.32103E-09	9.66796E-08	0.0966796
3971253767789	397125	3767789	0	0	0	0	0	0	0.007342967	0	0.006096048	0	9.41966E-08	5.48633E-09	9.96829E-08	0.0996829
3971753767789	397175	3767789	0	0	0	0	0	0	0.007062497	0	0.005863205	0	9.05987E-08	5.27677E-09	9.58755E-08	0.0958755
3972253767789	397225	3767789	0	0	0	0	0	0	0.006322858	0	0.005249165	0	8.11105E-08	4.72415E-09	8.58346E-08	0.0858346
3972753767789	397275	3767789	0	0	0	0	0	0	0.005546491	0	0.004604634	0	7.11511E-08	4.14408E-09	7.52952E-08	0.0752952
3973253767789	397325	3767789	0	0	0	0	0	0	0.004518703	0	0.003751376	0	5.79665E-08	3.37617E-09	6.13427E-08	0.0613427
3973753767789	397375	3767789	0	0	0	0	0	0	0.003542467	0	0.002940916	0	4.54433E-08	2.64677E-09	4.809E-08	0.04809
3974253767789	397425	3767789	0	0	0	0	0	0	0.002826067	0	0.002346169	0	3.62532E-08	2.11151E-09	3.83647E-08	0.0383647
3974753767789	397475	3767789	0	0	0	0	0	0	0.002398952	0	0.001991583	0	3.07741E-08	1.79239E-09	3.25665E-08	0.0325665
3975253767789	397525	3767789	0	0	0	0	0	0	0.001956744	0	0.001624467	0	2.51014E-08	1.46199E-09	2.65634E-08	0.0265634
3964253767839	396425	3767839	0	0	0	0	0	0	0.000733295	0	0.000608773	0	9.40681E-09	5.47884E-10	9.95469E-09	0.0099547
3964753767839	396475	3767839	0	0	0	0	0	0	0.00083166	0	0.000690435	0	1.06686E-08	6.21378E-10	1.129E-08	0.01129
3965253767839	396525	3767839	0	0	0	0	0	0	0.000927754	0	0.000770211	0	1.19014E-08	6.93175E-10	1.25945E-08	0.0125945
3965753767839	396575	3767839	0	0	0	0	0	0	0.001073999	0	0.000891622	0	1.37774E-08	8.02443E-10	1.45798E-08	0.0145798
3966253767839	396625	3767839	0	0	0	0	0	0	0.001263717	0	0.001049123	0	1.62111E-08	9.44191E-10	1.71553E-08	0.0171553
3966753767839	396675	3767839	0	0	0	0	0	0	0.001569896	0	0.00130331	0	2.01388E-08	1.17295E-09	2.13118E-08	0.0213118
3967253767839	396725	3767839	0	0	0	0	0	0	0.001934641	0	0.001606117	0	2.48178E-08	1.44548E-09	2.62633E-08	0.0262633
3967753767839	396775	3767839	0	0	0	0	0	0	0.002419186	0	0.002008381	0	3.10336E-08	1.8075E-09	3.28411E-08	0.0328411
3968253767839	396825	3767839	0	0	0	0	0	0	0.003103465	0	0.002576462	0	3.98117E-08	2.31877E-09	4.21304E-08	0.0421304
3968753767839	396875	3767839	0	0	0	0	0	0	0.004073023	0	0.003381377	0	5.22493E-08	3.04318E-09	5.52925E-08	0.0552925
3969253767839	396925	3767839	0	0	0	0	0	0	0.005411532	0	0.004492592	0	6.94199E-08	4.04325E-09	7.34631E-08	0.0734631
3969753767839	396975	3767839	0	0	0	0	0	0	0.007395989	0	0.006140066	0	9.48768E-08	5.52594E-09	1.00403E-07	0.1004027
3970253767839	397025	3767839	0	0	0	0	0	0	0.009825325	0	0.008156874	0	1.26041E-07	7.34103E-09	1.33382E-07	0.1333816
3970753767839	397075	3767839	0	0	0	0	0	0	0.011481299	0	0.009531645	0	1.47284E-07	8.5783E-09	1.55862E-07	0.155862
3971253767839	397125	3767839	0	0	0	0	0	0	0.01240518	0	0.01029864	0	1.59135E-07	9.26858E-09	1.68404E-07	0.1684039
3971753767839	397175	3767839	0	0	0	0	0	0	0.012103475	0	0.010048168	0	1.55265E-07	9.04316E-09	1.64308E-07	0.1643082
3972253767839	397225	3767839	0	0	0	0	0	0	0.010573779	0	0.008778232	0	1.35642E-07	7.90024E-09	1.43542E-07	0.1435421
3972753767839	397275	3767839	0	0	0	0	0	0	0.008407817	0	0.006980075	0	1.07857E-07	6.28194E-09	1.14139E-07	0.1141386
3973253767839	397325	3767839	0	0	0	0	0	0	0.006336748	0	0.005260697	0	8.12887E-08	4.73453E-09	8.60232E-08	0.0860232
3973753767839	397375	3767839	0	0	0	0	0	0	0.004588687	0	0.003809476	0	5.88643E-08	3.42846E-09	6.22928E-08	0.0622928
3974753767839	397475	3767839	0	0	0	0	0	0	0.002700524	0	0.002241944	0	3.46427E-08	2.01771E-09	3.66604E-08	0.0366604
3975253767839	397525	3767839	0	0	0	0	0	0	0.002225795	0	0.00184783	0	2.85528E-08	1.66301E-09	3.02158E-08	0.0302158
3964253767889	396425	3767889	0	0	0	0	0	0	0.000739639	0	0.00061404	0	9.48819E-09	5.52624E-10	1.00408E-08	0.0100408
3964753767889	396475	3767889	0	0	0	0	0	0	0.000821242	0	0.000681786	0	1.0535E-08	6.13595E-10	1.11486E-08	0.0111486
3965253767889	396525	3767889	0	0	0	0	0	0	0.000942779	0	0.000782685	0	1.20941E-08	7.04402E-10	1.27985E-08	0.0127985
3965753767889	396575	3767889	0	0	0	0	0	0	0.001109191	0	0.000920838	0	1.42289E-08	8.28737E-10	1.50576E-08	0.0150576
3974753767889	397475	3767889	0	0	0	0	0	0	0.003193683	0	0.00265136	0	4.0969E-08	2.38617E-09	4.33552E-08	0.0433552
3975253767889	397525	3767889	0	0	0	0	0	0	0.002507333	0	0.00208156	0	3.21644E-08	1.87336E-09	3.40378E-08	0.0340378
3964253767939	396425	3767939	0	0	0	0	0	0	0.000741442	0	0.000615537	0	9.51132E-09	5.53972E-10	1.00653E-08	0.0100653
3964753767939	396475	3767939	0	0	0	0	0	0	0.000825182	0	0.000685057	0	1.05856E-08	6.16538E-10	1.12021E-08	0.0112021
3965253767939	396525	3767939	0	0	0	0	0	0	0.000953864	0	0.000791888	0	1.22363E-08	7.12684E-10	1.2949E-08	0.012949
3974753767939	397475	3767939	0	0	0	0	0	0	0.003688913	0	0.003062494	0	4.73219E-08	2.75619E-09	5.00781E-08	0.0500781
3975253767939	397525	3767939	0	0	0	0	0	0	0.002800024	0	0.002324548	0	3.59191E-08	2.09205E-09	3.80111E-08	0.0380111
3964253767989	396425	3767989	0	0	0	0	0	0	0.000727352	0	0.000603839	0	9.33057E-09	5.43444E-10	9.87401E-09	0.009874
3964753767989	396475	3767989	0	0	0	0	0	0	0.000825583	0	0.00068539	0	1.05907E-08	6.16838E-10	1.12075E-08	0.0112075
3974753767989	397475	3767989	0	0	0	0	0	0	0.00419703	0	0.003484327	0	5.38401E-08	3.13583E-09	5.69759E-08	0.0569759
3975253767989	397525	3767989	0	0	0	0	0	0	0.003115953	0	0.002586829	0	3.99719E-08	2.3281E-09	4.23E-08	0.0423
3964253768039	396425	3768039	0	0	0	0	0	0	0.000721141	0	0.000598683	0	9.2509E-09	5.38804E-10	9.7897E-09	0.0097897
3964753768039	396475	3768039	0	0	0	0	0	0	0.000822778	0	0.000683061	0	1.05547E-08	6.14742E-10	1.11695E-08	0.0111695
3974753768039	397475	3768039	0	0	0	0	0	0	0.004658804	0	0.003867686	0	5.97638E-08	3.48085E-09	6.32446E-08	0.0632446
3975253768039	397525	3768039	0	0	0	0	0	0	0.003383935	0	0.002809305	0	4.34096E-08	2.52832E-09	4.59379E-08	0.0459379
3964253768089	396425	3768089	0	0	0	0	0	0	0.000713595	0	0.000592419	0	9.1541E-09	5.33166E-10	9.68726E-09	0.0096873

Garvey Reservoir Rehab - Unmitigated Surge Tank Telemetry			Demolition - 2025	Demolition - 2026	ite Preparation - 202	te Preparation - 202	Grading - 2025	Grading - 2026	nfrastructure - 202	nfrastructure - 202	Paving - 2025	itectural Coating -	Child Risk			
Unique Identifier	X (UTM)	Y (UTM)	1900	1900	1900	1900	1900	1900	2025	1900	2025	1900	3rd Trimester	0<2	Total	per million
3964753768089	396475	3768089	0	0	0	0	0	0	0.000815366	0	0.000676907	0	1.04596E-08	6.09204E-10	1.10688E-08	0.0110688
3974753768089	397475	3768089	0	0	0	0	0	0	0.005079642	0	0.004217062	0	6.51623E-08	3.79528E-09	6.89576E-08	0.0689576
3975253768089	397525	3768089	0	0	0	0	0	0	0.003628612	0	0.003012432	0	4.65483E-08	2.71113E-09	4.92595E-08	0.0492595
3964253768139	396425	3768139	0	0	0	0	0	0	0.00071413	0	0.000592862	0	9.16095E-09	5.33565E-10	9.69452E-09	0.0096945
3964753768139	396475	3768139	0	0	0	0	0	0	0.000797469	0	0.00066205	0	1.023E-08	5.95832E-10	1.08259E-08	0.0108259
3974253768139	397425	3768139	0	0	0	0	0	0	0.007346907	0	0.006099319	0	9.42471E-08	5.48927E-09	9.97364E-08	0.0997364
3974753768139	397475	3768139	0	0	0	0	0	0	0.00518602	0	0.004305375	0	6.6527E-08	3.87476E-09	7.04017E-08	0.0704017
3975253768139	397525	3768139	0	0	0	0	0	0	0.003800433	0	0.003155076	0	4.87525E-08	2.83951E-09	5.1592E-08	0.051592
3964253768189	396425	3768189	0	0	0	0	0	0	0.000694563	0	0.000576619	0	8.90995E-09	5.18946E-10	9.4289E-09	0.0094289
3964753768189	396475	3768189	0	0	0	0	0	0	0.000775098	0	0.000643478	0	9.94307E-09	5.79118E-10	1.05222E-08	0.0105222
3973753768189	397375	3768189	0	0	0	0	0	0	0.009596809	0	0.007967162	0	1.23109E-07	7.1703E-09	1.30279E-07	0.1302795
3974253768189	397425	3768189	0	0	0	0	0	0	0.006729139	0	0.005586455	0	8.63223E-08	5.0277E-09	9.135E-08	0.09135
3974753768189	397475	3768189	0	0	0	0	0	0	0.005118441	0	0.004249271	0	6.56601E-08	3.82426E-09	6.94843E-08	0.0694843
3975253768189	397525	3768189	0	0	0	0	0	0	0.003868547	0	0.003211624	0	4.96262E-08	2.8904E-09	5.25166E-08	0.0525166
3964253768239	396425	3768239	0	0	0	0	0	0	0.000671859	0	0.00055777	0	8.6187E-09	5.01982E-10	9.12068E-09	0.0091207
3964753768239	396475	3768239	0	0	0	0	0	0	0.000748788	0	0.000621635	0	9.60555E-09	5.5946E-10	1.0165E-08	0.010165
3973753768239	397375	3768239	0	0	0	0	0	0	0.008349653	0	0.006931788	0	1.0711E-07	6.23848E-09	1.13349E-07	0.113349
3974253768239	397425	3768239	0	0	0	0	0	0	0.005933005	0	0.004925514	0	7.61094E-08	4.43287E-09	8.05423E-08	0.0805423
3974753768239	397475	3768239	0	0	0	0	0	0	0.004579605	0	0.003801936	0	5.87478E-08	3.42167E-09	6.21695E-08	0.0621695
3975253768239	397525	3768239	0	0	0	0	0	0	0.00361953	0	0.003004893	0	4.64318E-08	2.70435E-09	4.91362E-08	0.0491362
3964253768289	396425	3768289	0	0	0	0	0	0	0.00064468	0	0.000535206	0	8.27004E-09	4.81675E-10	8.75172E-09	0.0087517
3964753768289	396475	3768289	0	0	0	0	0	0	0.000719605	0	0.000597408	0	9.2312E-09	5.37656E-10	9.76885E-09	0.0097689
3973253768289	397325	3768289	0	0	0	0	0	0	0.008396799	0	0.006970927	0	1.07715E-07	6.2737E-09	1.13989E-07	0.113989
3973753768289	397375	3768289	0	0	0	0	0	0	0.006952313	0	0.005771731	0	8.91852E-08	5.19445E-09	9.43797E-08	0.0943797
3974253768289	397425	3768289	0	0	0	0	0	0	0.005659547	0	0.004698492	0	7.26014E-08	4.22855E-09	7.683E-08	0.07683
3974753768289	397475	3768289	0	0	0	0	0	0	0.004523711	0	0.003755534	0	5.80308E-08	3.37991E-09	6.14107E-08	0.0614107
3975253768289	397525	3768289	0	0	0	0	0	0	0.003597894	0	0.00298693	0	4.61543E-08	2.68818E-09	4.88425E-08	0.0488425
3964253768339	396425	3768339	0	0	0	0	0	0	0.000621508	0	0.000515969	0	7.97279E-09	4.64362E-10	8.43715E-09	0.0084371
3964753768339	396475	3768339	0	0	0	0	0	0	0.000689021	0	0.000572017	0	8.83885E-09	5.14805E-10	9.35366E-09	0.0093537
3965253768339	396525	3768339	0	0	0	0	0	0	0.000778103	0	0.000645973	0	9.98162E-09	5.81363E-10	1.0563E-08	0.010563
3972753768339	397275	3768339	0	0	0	0	0	0	0.007334085	0	0.006088675	0	9.40826E-08	5.47969E-09	9.95623E-08	0.0995623
3973253768339	397325	3768339	0	0	0	0	0	0	0.006668838	0	0.005536394	0	8.55488E-08	4.98265E-09	9.05314E-08	0.0905314
3973753768339	397375	3768339	0	0	0	0	0	0	0.00575504	0	0.004777769	0	7.38264E-08	4.2999E-09	7.81263E-08	0.0781263
3974253768339	397425	3768339	0	0	0	0	0	0	0.004885717	0	0.004056067	0	6.26747E-08	3.65038E-09	6.6325E-08	0.066325
3974753768339	397475	3768339	0	0	0	0	0	0	0.004081637	0	0.003388529	0	5.23598E-08	3.04961E-09	5.54094E-08	0.0554094
3975253768339	397525	3768339	0	0	0	0	0	0	0.003393217	0	0.002817011	0	4.35287E-08	2.53526E-09	4.60639E-08	0.0460639
3964253768389	396425	3768389	0	0	0	0	0	0	0.000593728	0	0.000492906	0	7.61642E-09	4.43606E-10	8.06003E-09	0.00806
3964753768389	396475	3768389	0	0	0	0	0	0	0.0006567	0	0.000545185	0	8.42424E-09	4.90656E-10	8.91489E-09	0.0089149
3965253768389	396525	3768389	0	0	0	0	0	0	0.000736434	0	0.000611379	0	9.44707E-09	5.50229E-10	9.9973E-09	0.0099973
3972253768389	397225	3768389	0	0	0	0	0	0	0.005801518	0	0.004816355	0	7.44227E-08	4.33463E-09	7.87573E-08	0.0787573
3972753768389	397275	3768389	0	0	0	0	0	0	0.005721384	0	0.004749828	0	7.33947E-08	4.27476E-09	7.76695E-08	0.0776695
3973253768389	397325	3768389	0	0	0	0	0	0	0.005354436	0	0.004445192	0	6.86874E-08	4.00059E-09	7.2688E-08	0.072688
3973753768389	397375	3768389	0	0	0	0	0	0	0.004778805	0	0.00396731	0	6.13032E-08	3.5705E-09	6.48737E-08	0.0648737
3974253768389	397425	3768389	0	0	0	0	0	0	0.004161972	0	0.003455222	0	5.33903E-08	3.10963E-09	5.65E-08	0.0565
3974753768389	397475	3768389	0	0	0	0	0	0	0.003579129	0	0.002971352	0	4.59136E-08	2.67416E-09	4.85877E-08	0.0485877
3975253768389	397525	3768389	0	0	0	0	0	0	0.003048373	0	0.002530725	0	3.91049E-08	2.2776E-09	4.13826E-08	0.0413826
3964253768439	396425	3768439	0	0	0	0	0	0	0.000571557	0	0.0004745	0	7.33202E-09	4.27042E-10	7.75906E-09	0.0077591
3964753768439	396475	3768439	0	0	0	0	0	0	0.000625047	0	0.000518907	0	8.01819E-09	4.67007E-10	8.4852E-09	0.0084852
3965253768439	396525	3768439	0	0	0	0	0	0	0.000695565	0	0.00057745	0	8.9228E-09	5.19694E-10	9.4425E-09	0.0094425
3971753768439	397175	3768439	0	0	0	0	0	0	0.004137397	0	0.00343482	0	5.30751E-08	3.09127E-09	5.61664E-08	0.0561664
3972253768439	397225	3768439	0	0	0	0	0	0	0.004538469	0	0.003767786	0	5.82201E-08	3.39094E-09	6.1611E-08	0.061611
3972753768439	397275	3768439	0	0	0	0	0	0	0.004534596	0	0.00376457	0	5.81704E-08	3.38804E-09	6.15585E-08	0.0615585
3973253768439	397325	3768439	0	0	0	0	0	0	0.004380204	0	0.003636396	0	5.61899E-08	3.27269E-09	5.94625E-08	0.0594625
3973753768439	397375	3768439	0	0	0	0	0	0	0.004057196	0	0.003368238	0	5.20463E-08	3.03135E-09	5.50776E-08	0.0550776
3974253768439	397425	3768439	0	0	0	0	0	0	0.003649714	0	0.003029951	0	4.6819E-08	2.7269E-09	4.95459E-08	0.0495459
3974753768439	397475	3768439	0	0	0	0	0	0	0.003154351	0	0.002618706	0	4.04644E-08	2.35679E-09	4.28212E-08	0.0428212
3975253768439	397525	3768439	0	0	0	0	0	0	0.002738387	0	0.002273378	0	3.51284E-08	2.046E-09	3.71744E-08	0.0371744
3964253768489	396425	3768489	0	0	0	0	0	0	0.00054311	0	0.000450884	0	6.96709E-09	4.05787E-10	7.37287E-09	0.0073729
3964753768489	396475	3768489	0	0	0	0	0	0	0.000592726	0	0.000492075	0	7.60357E-09	4.42858E-10	8.04643E-09	0.0080464
3965253768489	396525	3768489	0	0	0	0	0	0	0.000657435	0	0.000545795	0	8.43366E-09	4.91205E-10	8.92487E-09	0.0089249
3970753768489	397075	3768489	0	0	0	0	0	0	0.002683028	0	0.002227419	0	3.44182E-08	2.00464E-09	3.64229E-08	0.0364229
3971253768489	397125	3768489	0	0	0	0	0	0	0.002992346	0	0.002484212	0	3.83862E-08	2.23574E-09	4.0622E-08	0.040622
3971753768489	397175	3768489	0	0	0	0	0	0	0.003295387	0	0.002735793	0	4.22737E-08	2.46216E-09	4.47358E-08	0.0447358
3972253768489	397225	3768489	0	0	0	0	0	0	0.003549346	0	0.002946626	0	4.55315E-08	2.65191E-09	4.81834E-08	0.0481834
3972753768489	397275	3768489	0	0	0	0	0	0	0.003670816	0	0.00304747	0	4.70897E-08	2.74267E-09	4.98324E-08	0.0498324
3973253768489	397325	3768489	0	0	0	0	0	0	0.003613653	0	0.003000014	0	4.63564E-08	2.69996E-09	4.90564E-08	0.0490564
3973753768489	397375	3768489	0	0	0	0	0	0	0.003402433	0	0.002824661	0	4.36469E-08	2.54214E-09	4.6189E-08	0.046189
3974253768489	397425	3768489	0	0	0	0	0	0	0.003126571	0	0.002595644	0	4.01081E-08	2.33603E-09	4.24441E-08	0.0424441
3974753768489	397475	3768489	0	0	0	0	0	0	0.002824331	0	0.002344728	0	3.62309E-08	2.11021E-09	3.83411E-08	0.0383411

Garvey Reservoir Rehab - Unmitigated Surge Tank Telemetry			Demolition - 2025	Demolition - 2026	ite Preparation - 202	te Preparation - 202	Grading - 2025	Grading - 2026	nfrastructure - 202	nfrastructure - 202	Paving - 2025	itectural Coating -	Child Risk			
Unique Identifier	X (UTM)	Y (UTM)	1900	1900	1900	1900	1900	1900	1900	1900	2025	1900	3rd Trimester	0<2	Total	per million
3975253768489	397525	3768489	0	0	0	0	0	0	0.002512342	0	0.002085718	0	3.22287E-08	1.87711E-09	3.41058E-08	0.0341058
3964253768539	396425	3768539	0	0	0	0	0	0	0.000516131	0	0.000428486	0	6.621E-09	3.8563E-10	7.00663E-09	0.0070066
3964753768539	396475	3768539	0	0	0	0	0	0	0.00056321	0	0.000467571	0	7.22494E-09	4.20805E-10	7.64574E-09	0.0076457
3965253768539	396525	3768539	0	0	0	0	0	0	0.000620573	0	0.000515193	0	7.96079E-09	4.63664E-10	8.42446E-09	0.0084245
3965753768539	396575	3768539	0	0	0	0	0	0	0.000695632	0	0.000577506	0	8.92366E-09	5.19744E-10	9.44341E-09	0.0094434
3970253768539	397025	3768539	0	0	0	0	0	0	0.002010234	0	0.001668874	0	2.57876E-08	1.50195E-09	2.72895E-08	0.0272895
3970753768539	397075	3768539	0	0	0	0	0	0	0.002251171	0	0.001868897	0	2.88783E-08	1.68197E-09	3.05603E-08	0.0305603
3971253768539	397125	3768539	0	0	0	0	0	0	0.002483093	0	0.002061436	0	3.18535E-08	1.85525E-09	3.37087E-08	0.0337087
3971753768539	397175	3768539	0	0	0	0	0	0	0.002711475	0	0.002251036	0	3.47832E-08	2.02589E-09	3.68091E-08	0.0368091
3972253768539	397225	3768539	0	0	0	0	0	0	0.002878422	0	0.002389633	0	3.69248E-08	2.15062E-09	3.90754E-08	0.0390754
3972753768539	397275	3768539	0	0	0	0	0	0	0.003023865	0	0.002510379	0	3.87906E-08	2.25929E-09	4.10499E-08	0.0410499
3973253768539	397325	3768539	0	0	0	0	0	0	0.003002363	0	0.002492527	0	3.85147E-08	2.24323E-09	4.07579E-08	0.0407579
3973753768539	397375	3768539	0	0	0	0	0	0	0.002870341	0	0.002382925	0	3.68211E-08	2.14459E-09	3.89657E-08	0.0389657
3974253768539	397425	3768539	0	0	0	0	0	0	0.002690507	0	0.002233628	0	3.45142E-08	2.01022E-09	3.65244E-08	0.0365244
3974753768539	397475	3768539	0	0	0	0	0	0	0.002470071	0	0.002050625	0	3.16864E-08	1.84552E-09	3.35319E-08	0.0335319
3975253768539	397525	3768539	0	0	0	0	0	0	0.002237014	0	0.001857144	0	2.86967E-08	1.67139E-09	3.03681E-08	0.0303681
3964253768589	396425	3768589	0	0	0	0	0	0	0.000492558	0	0.000408916	0	6.31861E-09	3.68017E-10	6.68662E-09	0.0066866
3964753768589	396475	3768589	0	0	0	0	0	0	0.000534562	0	0.000443787	0	6.85744E-09	3.994E-10	7.25684E-09	0.0072568
3965253768589	396525	3768589	0	0	0	0	0	0	0.000589922	0	0.000489746	0	7.56759E-09	4.40762E-10	8.00836E-09	0.0080084
3965753768589	396575	3768589	0	0	0	0	0	0	0.000653094	0	0.000542191	0	8.37798E-09	4.87962E-10	8.86594E-09	0.0088659
3966253768589	396625	3768589	0	0	0	0	0	0	0.000725081	0	0.000601954	0	9.30144E-09	5.41748E-10	9.84319E-09	0.0098432
3968253768589	396825	3768589	0	0	0	0	0	0	0.001124016	0	0.000933146	0	1.4419E-08	8.39813E-10	1.52588E-08	0.0152588
3968753768589	396875	3768589	0	0	0	0	0	0	0.001261179	0	0.001047017	0	1.61786E-08	9.42295E-10	1.71209E-08	0.0171209
3969253768589	396925	3768589	0	0	0	0	0	0	0.001397808	0	0.001160444	0	1.79313E-08	1.04438E-09	1.89757E-08	0.0189757
3969753768589	396975	3768589	0	0	0	0	0	0	0.001572501	0	0.001305472	0	2.01723E-08	1.1749E-09	2.13472E-08	0.0213472
3970253768589	397025	3768589	0	0	0	0	0	0	0.001750733	0	0.001453438	0	2.24586E-08	1.30807E-09	2.37667E-08	0.0237667
3970753768589	397075	3768589	0	0	0	0	0	0	0.00191848	0	0.001592701	0	2.46105E-08	1.4334E-09	2.60439E-08	0.0260439
3971253768589	397125	3768589	0	0	0	0	0	0	0.002112272	0	0.001753584	0	2.70965E-08	1.57819E-09	2.86747E-08	0.0286747
3971753768589	397175	3768589	0	0	0	0	0	0	0.002278617	0	0.001891682	0	2.92304E-08	1.70248E-09	3.09329E-08	0.0309329
3972253768589	397225	3768589	0	0	0	0	0	0	0.002394812	0	0.001988145	0	3.0721E-08	1.78929E-09	3.25103E-08	0.0325103
3972753768589	397275	3768589	0	0	0	0	0	0	0.002459453	0	0.00204181	0	3.15502E-08	1.83759E-09	3.33878E-08	0.0333878
3973253768589	397325	3768589	0	0	0	0	0	0	0.00251528	0	0.002088157	0	3.22664E-08	1.8793E-09	3.41457E-08	0.0341457
3973753768589	397375	3768589	0	0	0	0	0	0	0.002436415	0	0.002022684	0	3.12547E-08	1.82038E-09	3.3075E-08	0.033075
3974253768589	397425	3768589	0	0	0	0	0	0	0.002327432	0	0.001932208	0	2.98566E-08	1.73895E-09	3.15956E-08	0.0315956
3974753768589	397475	3768589	0	0	0	0	0	0	0.002167431	0	0.001799376	0	2.78041E-08	1.61941E-09	2.94235E-08	0.0294235
3975253768589	397525	3768589	0	0	0	0	0	0	0.001991069	0	0.001652963	0	2.55417E-08	1.48764E-09	2.70293E-08	0.0270293
3964253768639	396425	3768639	0	0	0	0	0	0	0.00046972	0	0.000389956	0	6.02563E-09	3.50953E-10	6.37659E-09	0.0063766
3964753768639	396475	3768639	0	0	0	0	0	0	0.000506248	0	0.000420281	0	6.49422E-09	3.78245E-10	6.87246E-09	0.0068725
3965253768639	396525	3768639	0	0	0	0	0	0	0.000558268	0	0.000463468	0	7.16154E-09	4.17113E-10	7.57866E-09	0.0075787
3965753768639	396575	3768639	0	0	0	0	0	0	0.000612827	0	0.000508762	0	7.86142E-09	4.57876E-10	8.3193E-09	0.0083193
3966253768639	396625	3768639	0	0	0	0	0	0	0.000674931	0	0.00056032	0	8.6581E-09	5.04277E-10	9.16238E-09	0.0091624
3966753768639	396675	3768639	0	0	0	0	0	0	0.000746183	0	0.000619473	0	9.57214E-09	5.57514E-10	1.01297E-08	0.0101297
3967253768639	396725	3768639	0	0	0	0	0	0	0.000826785	0	0.000686388	0	1.06061E-08	6.17736E-10	1.12238E-08	0.0112238
3967753768639	396775	3768639	0	0	0	0	0	0	0.0009152	0	0.000759788	0	1.17403E-08	6.83795E-10	1.24241E-08	0.0124241
3968253768639	396825	3768639	0	0	0	0	0	0	0.001016102	0	0.000843556	0	1.30347E-08	7.59185E-10	1.37939E-08	0.0137939
3968753768639	396875	3768639	0	0	0	0	0	0	0.001123482	0	0.000932702	0	1.44122E-08	8.39414E-10	1.52516E-08	0.0152516
3969253768639	396925	3768639	0	0	0	0	0	0	0.001240077	0	0.001029498	0	1.59079E-08	9.26529E-10	1.68344E-08	0.0168344
3969753768639	396975	3768639	0	0	0	0	0	0	0.001375237	0	0.001141706	0	1.76417E-08	1.02751E-09	1.86692E-08	0.0186692
3970253768639	397025	3768639	0	0	0	0	0	0	0.001513535	0	0.00125652	0	1.94158E-08	1.13084E-09	2.05467E-08	0.0205467
3970753768639	397075	3768639	0	0	0	0	0	0	0.001643553	0	0.001364459	0	2.10837E-08	1.22799E-09	2.23117E-08	0.0223117
3971253768639	397125	3768639	0	0	0	0	0	0	0.001755607	0	0.001457485	0	2.25212E-08	1.31171E-09	2.38329E-08	0.0238329
3971753768639	397175	3768639	0	0	0	0	0	0	0.001916544	0	0.001591093	0	2.45857E-08	1.43195E-09	2.60176E-08	0.0260176
3972253768639	397225	3768639	0	0	0	0	0	0	0.002021453	0	0.001678187	0	2.59315E-08	1.51034E-09	2.74418E-08	0.0274418
3972753768639	397275	3768639	0	0	0	0	0	0	0.002092906	0	0.001737507	0	2.68481E-08	1.56372E-09	2.84118E-08	0.0284118
3973253768639	397325	3768639	0	0	0	0	0	0	0.002126429	0	0.001765337	0	2.72781E-08	1.58877E-09	2.88669E-08	0.0288669
3973753768639	397375	3768639	0	0	0	0	0	0	0.002082154	0	0.001728581	0	2.67102E-08	1.55569E-09	2.82659E-08	0.0282659
3974253768639	397425	3768639	0	0	0	0	0	0	0.00200763	0	0.001666711	0	2.57541E-08	1.50001E-09	2.72542E-08	0.0272542
3974753768639	397475	3768639	0	0	0	0	0	0	0.001909332	0	0.001585106	0	2.44932E-08	1.42657E-09	2.59197E-08	0.0259197
3975253768639	397525	3768639	0	0	0	0	0	0	0.001775708	0	0.001474173	0	2.2779E-08	1.32673E-09	2.41058E-08	0.0241058
3964253768689	396425	3768689	0	0	0	0	0	0	0.000447416	0	0.00037144	0	5.73952E-09	3.34289E-10	6.0738E-09	0.0060738
3964753768689	396475	3768689	0	0	0	0	0	0	0.00047947	0	0.00039805	0	6.1507E-09	3.58238E-10	6.50894E-09	0.0065089
3965253768689	396525	3768689	0	0	0	0	0	0	0.000521474	0	0.000432921	0	6.68953E-09	3.89621E-10	7.07915E-09	0.0070792
3965753768689	396575	3768689	0	0	0	0	0	0	0.000571758	0	0.000474667	0	7.33459E-09	4.27191E-10	7.76178E-09	0.0077618
3966253768689	396625	3768689	0	0	0	0	0	0	0.00062478	0	0.000518685	0	8.01476E-09	4.66807E-10	8.48157E-09	0.0084816
3966753768689	396675	3768689	0	0	0	0	0	0	0.000686617	0	0.000570022	0	8.80801E-09	5.13009E-10	9.32102E-09	0.009321
3967253768689	396725	3768689	0	0	0	0	0	0	0.000752327	0	0.000624573	0	9.65095E-09	5.62104E-10	1.02131E-08	0.0102131
3967753768689	396775	3768689	0	0	0	0	0	0	0.000826585	0	0.000686221	0	1.06035E-08	6.17586E-10	1.12211E-08	0.0112211
3968253768689	396825	3768689	0	0	0	0	0	0	0.000908388	0	0.000754134	0	1.16529E-08	6.78706E-10	1.23316E-08	0.0123316
3968753768689	396875	3768689	0	0	0	0	0	0	0.001000075	0	0.000830251	0	1.28291E-08	7.4721E-10	1.35763E-08	0.0135763

Garvey Reservoir Rehab - Unmitigated Surge Tank Telemetry			Demolition - 2025	Demolition - 2026	ite Preparation - 202	te Preparation - 202	Grading - 2025	Grading - 2026	nfrastructure - 202	nfrastructure - 202	Paving - 2025	itectural Coating -	Child Risk			
Unique Identifier	X (UTM)	Y (UTM)	1900	1900	1900	1900	1900	1900	2025	1900	2025	1900	3rd Trimester	0<2	Total	per million
3969253768689	396925	3768689	0	0	0	0	0	0	0.001096437	0	0.000910249	0	1.40652E-08	8.19207E-10	1.48844E-08	0.0148844
3969753768689	396975	3768689	0	0	0	0	0	0	0.001200878	0	0.000996956	0	1.5405E-08	8.97241E-10	1.63023E-08	0.0163023
3970253768689	397025	3768689	0	0	0	0	0	0	0.001313267	0	0.001090259	0	1.68468E-08	9.81213E-10	1.7828E-08	0.017828
3970753768689	397075	3768689	0	0	0	0	0	0	0.001431732	0	0.001188607	0	1.83664E-08	1.06972E-09	1.94362E-08	0.0194362
3971253768689	397125	3768689	0	0	0	0	0	0	0.001514604	0	0.001257407	0	1.94295E-08	1.13164E-09	2.05612E-08	0.0205612
3971753768689	397175	3768689	0	0	0	0	0	0	0.001637209	0	0.001359193	0	2.10023E-08	1.22325E-09	2.22256E-08	0.0222256
3972253768689	397225	3768689	0	0	0	0	0	0	0.001734839	0	0.001440244	0	2.22548E-08	1.29619E-09	2.35509E-08	0.0235509
3972753768689	397275	3768689	0	0	0	0	0	0	0.001792469	0	0.001488088	0	2.2994E-08	1.33925E-09	2.43333E-08	0.0243333
3973253768689	397325	3768689	0	0	0	0	0	0	0.001819782	0	0.001510762	0	2.33444E-08	1.35966E-09	2.47041E-08	0.0247041
3973753768689	397375	3768689	0	0	0	0	0	0	0.001807628	0	0.001500672	0	2.31885E-08	1.35058E-09	2.45391E-08	0.0245391
3974253768689	397425	3768689	0	0	0	0	0	0	0.001754806	0	0.00145682	0	2.25109E-08	1.31111E-09	2.3822E-08	0.023822
3974753768689	397475	3768689	0	0	0	0	0	0	0.001676007	0	0.001391402	0	2.15001E-08	1.25224E-09	2.27523E-08	0.0227523
3975253768689	397525	3768689	0	0	0	0	0	0	0.001578845	0	0.001310739	0	2.02536E-08	1.17964E-09	2.14333E-08	0.0214333

Garvey Reservoir Rehab - Unmitigated Surge Tank Telemetry

Offroad DPM Emissions, Ground Level Concentrations and Health Risk Calculations

Residential Receptors

Phase	Year	Emissions (lbs/day)	Meters	lbs/meter	meters (h1)	lbs/day (H1)	g/s (H1)	meters (h2)	lbs/day (H2)	g/s (H2)	hrs/day
Demolition - 2025	1900		1932.1	0	691.2	0	0	1240.9	0	0	10.00
Demolition - 2026	1900		1932.1	0	691.2	0	0	1240.9	0	0	10.00
Site Preparation - 2025	1900		1932.1	0	691.2	0	0	1240.9	0	0	10.00
Site Preparation - 2026	1900		1932.1	0	691.2	0	0	1240.9	0	0	10.00
Grading - 2025	1900		1932.1	0	691.2	0	0	1240.9	0	0	10.00
Grading - 2026	1900		1932.1	0	691.2	0	0	1240.9	0	0	10.00
Infrastructure - 2025	2025	0.0001	1932.1	6.52126E-08	691.2	4.50749E-05	5.67932E-07	1240.9	8.09223E-05	1.0196E-06	10.00
Infrastructure - 2026	1900		1932.1	0	691.2	0	0	1240.9	0	0	10.00
Paving - 2025	2025	0.0000	1932.1	0	691.2	0	0	1240.9	0	0	10.00
Architectural Coating - 2026	1900		1932.1	0	691.2	0	0	1240.9	0	0	10.00

		AERMOD Column Identifier:	*5*	*5*	*5*	*5*	*5*	*5*	*5*	*5*	*5*	*5*				
			6	*6*	*6*	*6*	*6*	*6*	*6*	*6*	*6*	*6*			*MAX:*	0.000119
Garvey Reservoir Rehab - Unmitigated Surge Tank Telemetry			Demolition - 2025	Demolition - 2026	Site Preparation - 2025	te Preparation - 202	Grading - 2025	Grading - 2026	Infrastructure - 2025	nfrastructure - 2026	Paving - 2025	rchitectural Coating - 202	Child Risk			
Unique Identifier	X (UTM)	Y (UTM)	1900	1900	1900	1900	1900	1900	2025	1900	2025	1900	3rd Trimester	0<2	Total	per million
396166.283767377.2	396166.28	3767377	0	0	0	0	0	0	4.82584E-08	0	0	0	4.45911E-13	0	4.45911E-13	4.459E-07
396266.283767377.2	396266.28	3767377	0	0	0	0	0	0	4.93524E-08	0	0	0	4.5602E-13	0	4.5602E-13	4.56E-07
396366.283767377.2	396366.28	3767377	0	0	0	0	0	0	5.13596E-08	0	0	0	4.74567E-13	0	4.74567E-13	4.746E-07
396466.283767377.2	396466.28	3767377	0	0	0	0	0	0	5.26977E-08	0	0	0	4.86932E-13	0	4.86932E-13	4.869E-07
396566.283767377.2	396566.28	3767377	0	0	0	0	0	0	5.77712E-08	0	0	0	5.3381E-13	0	5.3381E-13	5.338E-07
396666.283767377.2	396666.28	3767377	0	0	0	0	0	0	5.46195E-08	0	0	0	5.04688E-13	0	5.04688E-13	5.047E-07
396766.283767377.2	396766.28	3767377	0	0	0	0	0	0	5.44053E-08	0	0	0	5.02709E-13	0	5.02709E-13	5.027E-07
396866.283767377.2	396866.28	3767377	0	0	0	0	0	0	5.44529E-08	0	0	0	5.03149E-13	0	5.03149E-13	5.031E-07
396966.283767377.2	396966.28	3767377	0	0	0	0	0	0	5.51734E-08	0	0	0	5.09807E-13	0	5.09807E-13	5.098E-07
397066.283767377.2	397066.28	3767377	0	0	0	0	0	0	5.3782E-08	0	0	0	4.9695E-13	0	4.9695E-13	4.97E-07
397166.283767377.2	397166.28	3767377	0	0	0	0	0	0	5.30464E-08	0	0	0	4.90153E-13	0	4.90153E-13	4.902E-07
397266.283767377.2	397266.28	3767377	0	0	0	0	0	0	5.31104E-08	0	0	0	4.90744E-13	0	4.90744E-13	4.907E-07
397366.283767377.2	397366.28	3767377	0	0	0	0	0	0	5.06893E-08	0	0	0	4.68374E-13	0	4.68374E-13	4.684E-07
397466.283767377.2	397466.28	3767377	0	0	0	0	0	0	4.56335E-08	0	0	0	4.21658E-13	0	4.21658E-13	4.217E-07
397566.283767377.2	397566.28	3767377	0	0	0	0	0	0	4.48866E-08	0	0	0	4.14756E-13	0	4.14756E-13	4.148E-07
397666.283767377.2	397666.28	3767377	0	0	0	0	0	0	4.3569E-08	0	0	0	4.02581E-13	0	4.02581E-13	4.026E-07
397766.283767377.2	397766.28	3767377	0	0	0	0	0	0	4.49648E-08	0	0	0	4.15479E-13	0	4.15479E-13	4.155E-07
397866.283767377.2	397866.28	3767377	0	0	0	0	0	0	4.28292E-08	0	0	0	3.95745E-13	0	3.95745E-13	3.957E-07
396166.283767477.2	396166.28	3767477	0	0	0	0	0	0	5.55344E-08	0	0	0	5.13143E-13	0	5.13143E-13	5.131E-07
396266.283767477.2	396266.28	3767477	0	0	0	0	0	0	5.4263E-08	0	0	0	5.01395E-13	0	5.01395E-13	5.014E-07
396366.283767477.2	396366.28	3767477	0	0	0	0	0	0	5.71677E-08	0	0	0	5.28234E-13	0	5.28234E-13	5.282E-07
396466.283767477.2	396466.28	3767477	0	0	0	0	0	0	6.26129E-08	0	0	0	5.78549E-13	0	5.78549E-13	5.785E-07
396566.283767477.2	396566.28	3767477	0	0	0	0	0	0	6.34637E-08	0	0	0	5.8641E-13	0	5.8641E-13	5.864E-07
396666.283767477.2	396666.28	3767477	0	0	0	0	0	0	6.1621E-08	0	0	0	5.69383E-13	0	5.69383E-13	5.694E-07
396766.283767477.2	396766.28	3767477	0	0	0	0	0	0	6.2103E-08	0	0	0	5.73837E-13	0	5.73837E-13	5.738E-07
396866.283767477.2	396866.28	3767477	0	0	0	0	0	0	6.24656E-08	0	0	0	5.77187E-13	0	5.77187E-13	5.772E-07
396966.283767477.2	396966.28	3767477	0	0	0	0	0	0	6.33955E-08	0	0	0	5.8578E-13	0	5.8578E-13	5.858E-07
397066.283767477.2	397066.28	3767477	0	0	0	0	0	0	6.21772E-08	0	0	0	5.74522E-13	0	5.74522E-13	5.745E-07
397166.283767477.2	397166.28	3767477	0	0	0	0	0	0	6.02189E-08	0	0	0	5.56428E-13	0	5.56428E-13	5.564E-07
397266.283767477.2	397266.28	3767477	0	0	0	0	0	0	6.04179E-08	0	0	0	5.58266E-13	0	5.58266E-13	5.583E-07
397366.283767477.2	397366.28	3767477	0	0	0	0	0	0	5.86004E-08	0	0	0	5.41472E-13	0	5.41472E-13	5.415E-07
397466.283767477.2	397466.28	3767477	0	0	0	0	0	0	5.28551E-08	0	0	0	4.88385E-13	0	4.88385E-13	4.884E-07
397566.283767477.2	397566.28	3767477	0	0	0	0	0	0	5.01255E-08	0	0	0	4.63164E-13	0	4.63164E-13	4.632E-07
397666.283767477.2	397666.28	3767477	0	0	0	0	0	0	4.90262E-08	0	0	0	4.53006E-13	0	4.53006E-13	4.53E-07
397766.283767477.2	397766.28	3767477	0	0	0	0	0	0	4.78618E-08	0	0	0	4.42247E-13	0	4.42247E-13	4.422E-07
397866.283767477.2	397866.28	3767477	0	0	0	0	0	0	4.60623E-08	0	0	0	4.25619E-13	0	4.25619E-13	4.256E-07
396166.283767577.2	396166.28	3767577	0	0	0	0	0	0	5.85404E-08	0	0	0	5.40918E-13	0	5.40918E-13	5.409E-07
396266.283767577.2	396266.28	3767577	0	0	0	0	0	0	6.01789E-08	0	0	0	5.56058E-13	0	5.56058E-13	5.561E-07
396366.283767577.2	396366.28	3767577	0	0	0	0	0	0	6.29392E-08	0	0	0	5.81563E-13	0	5.81563E-13	5.816E-07
396466.283767577.2	396466.28	3767577	0	0	0	0	0	0	6.68318E-08	0	0	0	6.17532E-13	0	6.17532E-13	6.175E-07
396566.283767577.2	396566.28	3767577	0	0	0	0	0	0	7.42387E-08	0	0	0	6.85972E-13	0	6.85972E-13	6.86E-07
396666.283767577.2	396666.28	3767577	0	0	0	0	0	0	7.53816E-08	0	0	0	6.96532E-13	0	6.96532E-13	6.965E-07
396766.283767577.2	396766.28	3767577	0	0	0	0	0	0	7.10828E-08	0	0	0	6.56811E-13	0	6.56811E-13	6.568E-07
396866.283767577.2	396866.28	3767577	0	0	0	0	0	0	7.2875E-08	0	0	0	6.73371E-13	0	6.73371E-13	6.734E-07

Garvey Reservoir Rehab - Unmitigated Surge Tank Telemetry			Demolition - 2025	Demolition - 2026	Site Preparation - 2025	te Preparation - 202	Grading - 2025	Grading - 2026	Infrastructure - 2025	nfrastructure - 2026	Paving - 2025	rchitectural Coating - 202	Child Risk			
Unique Identifier	X (UTM)	Y (UTM)	1900	1900	1900	1900	1900	1900	2025	1900	2025	1900	3rd Trimester	0<2	Total	per million
396966.283767577.2	396966.28	3767577	0	0	0	0	0	0	7.38717E-08	0	0	0	6.8258E-13	0	6.8258E-13	6.826E-07
397066.283767577.2	397066.28	3767577	0	0	0	0	0	0	7.38894E-08	0	0	0	6.82745E-13	0	6.82745E-13	6.827E-07
397166.283767577.2	397166.28	3767577	0	0	0	0	0	0	7.11631E-08	0	0	0	6.57553E-13	0	6.57553E-13	6.576E-07
397266.283767577.2	397266.28	3767577	0	0	0	0	0	0	7.02197E-08	0	0	0	6.48835E-13	0	6.48835E-13	6.488E-07
397366.283767577.2	397366.28	3767577	0	0	0	0	0	0	6.84696E-08	0	0	0	6.32665E-13	0	6.32665E-13	6.327E-07
397466.283767577.2	397466.28	3767577	0	0	0	0	0	0	6.09922E-08	0	0	0	5.63573E-13	0	5.63573E-13	5.636E-07
397566.283767577.2	397566.28	3767577	0	0	0	0	0	0	5.75304E-08	0	0	0	5.31586E-13	0	5.31586E-13	5.316E-07
397666.283767577.2	397666.28	3767577	0	0	0	0	0	0	5.44013E-08	0	0	0	5.02673E-13	0	5.02673E-13	5.027E-07
397766.283767577.2	397766.28	3767577	0	0	0	0	0	0	5.23333E-08	0	0	0	4.83564E-13	0	4.83564E-13	4.836E-07
397866.283767577.2	397866.28	3767577	0	0	0	0	0	0	4.97493E-08	0	0	0	4.59687E-13	0	4.59687E-13	4.597E-07
396166.283767677.2	396166.28	3767677	0	0	0	0	0	0	7.08796E-08	0	0	0	6.54933E-13	0	6.54933E-13	6.549E-07
396266.283767677.2	396266.28	3767677	0	0	0	0	0	0	6.70624E-08	0	0	0	6.19662E-13	0	6.19662E-13	6.197E-07
396366.283767677.2	396366.28	3767677	0	0	0	0	0	0	7.14612E-08	0	0	0	6.60307E-13	0	6.60307E-13	6.603E-07
396466.283767677.2	396466.28	3767677	0	0	0	0	0	0	8.45253E-08	0	0	0	7.81021E-13	0	7.81021E-13	7.81E-07
396566.283767677.2	396566.28	3767677	0	0	0	0	0	0	8.5292E-08	0	0	0	7.88105E-13	0	7.88105E-13	7.881E-07
396666.283767677.2	396666.28	3767677	0	0	0	0	0	0	7.98975E-08	0	0	0	7.3826E-13	0	7.3826E-13	7.383E-07
396766.283767677.2	396766.28	3767677	0	0	0	0	0	0	8.31757E-08	0	0	0	7.6855E-13	0	7.6855E-13	7.686E-07
396866.283767677.2	396866.28	3767677	0	0	0	0	0	0	8.78496E-08	0	0	0	8.11738E-13	0	8.11738E-13	8.117E-07
396966.283767677.2	396966.28	3767677	0	0	0	0	0	0	8.88059E-08	0	0	0	8.20574E-13	0	8.20574E-13	8.206E-07
397066.283767677.2	397066.28	3767677	0	0	0	0	0	0	8.85386E-08	0	0	0	8.18104E-13	0	8.18104E-13	8.181E-07
397166.283767677.2	397166.28	3767677	0	0	0	0	0	0	8.65801E-08	0	0	0	8.00008E-13	0	8.00008E-13	8E-07
397266.283767677.2	397266.28	3767677	0	0	0	0	0	0	7.93981E-08	0	0	0	7.33645E-13	0	7.33645E-13	7.336E-07
397366.283767677.2	397366.28	3767677	0	0	0	0	0	0	8.07646E-08	0	0	0	7.46272E-13	0	7.46272E-13	7.463E-07
397466.283767677.2	397466.28	3767677	0	0	0	0	0	0	6.9462E-08	0	0	0	6.41834E-13	0	6.41834E-13	6.418E-07
397566.283767677.2	397566.28	3767677	0	0	0	0	0	0	6.66442E-08	0	0	0	6.15798E-13	0	6.15798E-13	6.158E-07
397666.283767677.2	397666.28	3767677	0	0	0	0	0	0	6.27614E-08	0	0	0	5.7992E-13	0	5.7992E-13	5.799E-07
397766.283767677.2	397766.28	3767677	0	0	0	0	0	0	5.85869E-08	0	0	0	5.41348E-13	0	5.41348E-13	5.413E-07
397866.283767677.2	397866.28	3767677	0	0	0	0	0	0	5.5754E-08	0	0	0	5.15171E-13	0	5.15171E-13	5.152E-07
396166.283767777.2	396166.28	3767777	0	0	0	0	0	0	7.9549E-08	0	0	0	7.35039E-13	0	7.35039E-13	7.35E-07
396266.283767777.2	396266.28	3767777	0	0	0	0	0	0	9.03676E-08	0	0	0	8.35004E-13	0	8.35004E-13	8.35E-07
396366.283767777.2	396366.28	3767777	0	0	0	0	0	0	8.79503E-08	0	0	0	8.12668E-13	0	8.12668E-13	8.127E-07
396466.283767777.2	396466.28	3767777	0	0	0	0	0	0	9.28522E-08	0	0	0	8.57962E-13	0	8.57962E-13	8.58E-07
396566.283767777.2	396566.28	3767777	0	0	0	0	0	0	8.79114E-08	0	0	0	8.12308E-13	0	8.12308E-13	8.123E-07
396666.283767777.2	396666.28	3767777	0	0	0	0	0	0	9.2456E-08	0	0	0	8.54301E-13	0	8.54301E-13	8.543E-07
396766.283767777.2	396766.28	3767777	0	0	0	0	0	0	1.0134E-07	0	0	0	9.36394E-13	0	9.36394E-13	9.364E-07
396866.283767777.2	396866.28	3767777	0	0	0	0	0	0	1.08223E-07	0	0	0	9.99992E-13	0	9.99992E-13	1E-06
396966.283767777.2	396966.28	3767777	0	0	0	0	0	0	1.06896E-07	0	0	0	9.87732E-13	0	9.87732E-13	9.877E-07
397066.283767777.2	397066.28	3767777	0	0	0	0	0	0	1.07043E-07	0	0	0	9.89087E-13	0	9.89087E-13	9.891E-07
397166.283767777.2	397166.28	3767777	0	0	0	0	0	0	1.07189E-07	0	0	0	9.90438E-13	0	9.90438E-13	9.904E-07
397266.283767777.2	397266.28	3767777	0	0	0	0	0	0	9.97286E-08	0	0	0	9.21501E-13	0	9.21501E-13	9.215E-07
397366.283767777.2	397366.28	3767777	0	0	0	0	0	0	9.77948E-08	0	0	0	9.03632E-13	0	9.03632E-13	9.036E-07
397466.283767777.2	397466.28	3767777	0	0	0	0	0	0	8.4394E-08	0	0	0	7.79807E-13	0	7.79807E-13	7.798E-07
397566.283767777.2	397566.28	3767777	0	0	0	0	0	0	7.78492E-08	0	0	0	7.19333E-13	0	7.19333E-13	7.193E-07
397666.283767777.2	397666.28	3767777	0	0	0	0	0	0	7.40874E-08	0	0	0	6.84574E-13	0	6.84574E-13	6.846E-07
397766.283767777.2	397766.28	3767777	0	0	0	0	0	0	6.61501E-08	0	0	0	6.11232E-13	0	6.11232E-13	6.112E-07
397866.283767777.2	397866.28	3767777	0	0	0	0	0	0	6.03086E-08	0	0	0	5.57257E-13	0	5.57257E-13	5.573E-07
396166.283767877.2	396166.28	3767877	0	0	0	0	0	0	8.7916E-08	0	0	0	8.12351E-13	0	8.12351E-13	8.124E-07
396266.283767877.2	396266.28	3767877	0	0	0	0	0	0	1.01545E-07	0	0	0	9.3828E-13	0	9.3828E-13	9.383E-07
396366.283767877.2	396366.28	3767877	0	0	0	0	0	0	1.07341E-07	0	0	0	9.91838E-13	0	9.91838E-13	9.918E-07
396466.283767877.2	396466.28	3767877	0	0	0	0	0	0	1.01855E-07	0	0	0	9.41153E-13	0	9.41153E-13	9.412E-07
396566.283767877.2	396566.28	3767877	0	0	0	0	0	0	1.0081E-07	0	0	0	9.31497E-13	0	9.31497E-13	9.315E-07
397466.283767877.2	397466.28	3767877	0	0	0	0	0	0	1.18192E-07	0	0	0	1.09211E-12	0	1.09211E-12	1.092E-06
397566.283767877.2	397566.28	3767877	0	0	0	0	0	0	9.30936E-08	0	0	0	8.60192E-13	0	8.60192E-13	8.602E-07
397666.283767877.2	397666.28	3767877	0	0	0	0	0	0	7.84755E-08	0	0	0	7.2512E-13	0	7.2512E-13	7.251E-07
397766.283767877.2	397766.28	3767877	0	0	0	0	0	0	6.9464E-08	0	0	0	6.41853E-13	0	6.41853E-13	6.419E-07
397866.283767877.2	397866.28	3767877	0	0	0	0	0	0	6.95791E-08	0	0	0	6.42917E-13	0	6.42917E-13	6.429E-07
396166.283767977.2	396166.28	3767977	0	0	0	0	0	0	9.21507E-08	0	0	0	8.5148E-13	0	8.5148E-13	8.515E-07
396266.283767977.2	396266.28	3767977	0	0	0	0	0	0	1.0649E-07	0	0	0	9.83972E-13	0	9.83972E-13	9.84E-07
396366.283767977.2	396366.28	3767977	0	0	0	0	0	0	1.1518E-07	0	0	0	1.06427E-12	0	1.06427E-12	1.064E-06
396466.283767977.2	396466.28	3767977	0	0	0	0	0	0	1.10665E-07	0	0	0	1.02255E-12	0	1.02255E-12	1.023E-06
397466.283767977.2	397466.28	3767977	0	0	0	0	0	0	1.39392E-07	0	0	0	1.288E-12	0	1.288E-12	1.288E-06
397566.283767977.2	397566.28	3767977	0	0	0	0	0	0	1.12568E-07	0	0	0	1.04014E-12	0	1.04014E-12	1.04E-06
397666.283767977.2	397666.28	3767977	0	0	0	0	0	0	9.34362E-08	0	0	0	8.63358E-13	0	8.63358E-13	8.634E-07
397766.283767977.2	397766.28	3767977	0	0	0	0	0	0	9.41203E-08	0	0	0	8.69679E-13	0	8.69679E-13	8.697E-07
397866.283767977.2	397866.28	3767977	0	0	0	0	0	0	8.60711E-08	0	0	0	7.95304E-13	0	7.95304E-13	7.953E-07
396166.283768077.2	396166.28	3768077	0	0	0	0	0	0	1.24227E-07	0	0	0	1.14787E-12	0	1.14787E-12	1.148E-06
396266.283768077.2	396266.28	3768077	0	0	0	0	0	0	1.17734E-07	0	0	0	1.08787E-12	0	1.08787E-12	1.088E-06
396366.283768077.2	396366.28	3768077	0	0	0	0	0	0	1.27762E-07	0	0	0	1.18053E-12	0	1.18053E-12	1.181E-06
396466.283768077.2	396466.28	3768077	0	0	0	0	0	0	1.38306E-07	0	0	0	1.27796E-12	0	1.27796E-12	1.278E-06
397466.283768077.2	397466.28	3768077	0	0	0	0	0	0	2.41898E-07	0	0	0	2.23516E-12	0	2.23516E-12	2.235E-06
397566.283768077.2	397566.28	3768077	0	0	0	0	0	0	1.91162E-07	0	0	0	1.76636E-12	0	1.76636E-12	1.766E-06

Garvey Reservoir Rehab - Unmitigated Surge Tank Telemetry			Demolition - 2025	Demolition - 2026	Site Preparation - 2025	ite Preparation - 202	Grading - 2025	Grading - 2026	Infrastructure - 2025	nfrastructure - 2026	Paving - 2025	rchitectural Coating - 202	Child Risk			
Unique Identifier	X (UTM)	Y (UTM)	1900	1900	1900	1900	1900	1900	2025	1900	2025	1900	3rd Trimester	0<2	Total	per million
397666.283768077.2	397666.28	3768077	0	0	0	0	0	0	1.43419E-07	0	0	0	1.3252E-12	0	1.3252E-12	1.325E-06
397766.283768077.2	397766.28	3768077	0	0	0	0	0	0	1.1198E-07	0	0	0	1.03471E-12	0	1.03471E-12	1.035E-06
397866.283768077.2	397866.28	3768077	0	0	0	0	0	0	9.70612E-08	0	0	0	8.96853E-13	0	8.96853E-13	8.969E-07
396166.283768177.2	396166.28	3768177	0	0	0	0	0	0	1.49824E-07	0	0	0	1.38439E-12	0	1.38439E-12	1.384E-06
396266.283768177.2	396266.28	3768177	0	0	0	0	0	0	1.54745E-07	0	0	0	1.42986E-12	0	1.42986E-12	1.43E-06
396366.283768177.2	396366.28	3768177	0	0	0	0	0	0	1.68458E-07	0	0	0	1.55657E-12	0	1.55657E-12	1.557E-06
396466.283768177.2	396466.28	3768177	0	0	0	0	0	0	1.65874E-07	0	0	0	1.53269E-12	0	1.53269E-12	1.533E-06
397466.283768177.2	397466.28	3768177	0	0	0	0	0	0	5.29026E-07	0	0	0	4.88824E-12	0	4.88824E-12	4.888E-06
397566.283768177.2	397566.28	3768177	0	0	0	0	0	0	2.77513E-07	0	0	0	2.56424E-12	0	2.56424E-12	2.564E-06
397666.283768177.2	397666.28	3768177	0	0	0	0	0	0	1.89379E-07	0	0	0	1.74988E-12	0	1.74988E-12	1.75E-06
397766.283768177.2	397766.28	3768177	0	0	0	0	0	0	1.39652E-07	0	0	0	1.2904E-12	0	1.2904E-12	1.29E-06
397866.283768177.2	397866.28	3768177	0	0	0	0	0	0	1.1459E-07	0	0	0	1.05882E-12	0	1.05882E-12	1.059E-06
396166.283768277.2	396166.28	3768277	0	0	0	0	0	0	1.7819E-07	0	0	0	1.64649E-12	0	1.64649E-12	1.646E-06
396266.283768277.2	396266.28	3768277	0	0	0	0	0	0	1.75353E-07	0	0	0	1.62027E-12	0	1.62027E-12	1.62E-06
396366.283768277.2	396366.28	3768277	0	0	0	0	0	0	1.96843E-07	0	0	0	1.81884E-12	0	1.81884E-12	1.819E-06
396466.283768277.2	396466.28	3768277	0	0	0	0	0	0	2.03696E-07	0	0	0	1.88217E-12	0	1.88217E-12	1.882E-06
397366.283768277.2	397366.28	3768277	0	0	0	0	0	0	4.20457E-06	0	0	0	3.88506E-11	0	3.88506E-11	3.885E-05
397466.283768277.2	397466.28	3768277	0	0	0	0	0	0	8.25359E-07	0	0	0	7.62638E-12	0	7.62638E-12	7.626E-06
397566.283768277.2	397566.28	3768277	0	0	0	0	0	0	3.76802E-07	0	0	0	3.48168E-12	0	3.48168E-12	3.482E-06
397666.283768277.2	397666.28	3768277	0	0	0	0	0	0	2.36098E-07	0	0	0	2.18157E-12	0	2.18157E-12	2.182E-06
397766.283768277.2	397766.28	3768277	0	0	0	0	0	0	1.69126E-07	0	0	0	1.56274E-12	0	1.56274E-12	1.563E-06
397866.283768277.2	397866.28	3768277	0	0	0	0	0	0	1.30201E-07	0	0	0	1.20307E-12	0	1.20307E-12	1.203E-06
396166.283768377.2	396166.28	3768377	0	0	0	0	0	0	2.09999E-07	0	0	0	1.94041E-12	0	1.94041E-12	1.94E-06
396266.283768377.2	396266.28	3768377	0	0	0	0	0	0	2.18663E-07	0	0	0	2.02047E-12	0	2.02047E-12	2.02E-06
396366.283768377.2	396366.28	3768377	0	0	0	0	0	0	2.44136E-07	0	0	0	2.25584E-12	0	2.25584E-12	2.256E-06
396466.283768377.2	396466.28	3768377	0	0	0	0	0	0	2.63395E-07	0	0	0	2.43379E-12	0	2.43379E-12	2.434E-06
397266.283768377.2	397266.28	3768377	0	0	0	0	0	0	6.60068E-06	0	0	0	6.09908E-11	0	6.09908E-11	6.099E-05
397366.283768377.2	397366.28	3768377	0	0	0	0	0	0	2.96878E-06	0	0	0	2.74318E-11	0	2.74318E-11	2.743E-05
397466.283768377.2	397466.28	3768377	0	0	0	0	0	0	9.57957E-07	0	0	0	8.8516E-12	0	8.8516E-12	8.852E-06
397566.283768377.2	397566.28	3768377	0	0	0	0	0	0	4.59895E-07	0	0	0	4.24947E-12	0	4.24947E-12	4.249E-06
397666.283768377.2	397666.28	3768377	0	0	0	0	0	0	2.78761E-07	0	0	0	2.57578E-12	0	2.57578E-12	2.576E-06
397766.283768377.2	397766.28	3768377	0	0	0	0	0	0	1.95974E-07	0	0	0	1.81081E-12	0	1.81081E-12	1.811E-06
397866.283768377.2	397866.28	3768377	0	0	0	0	0	0	1.40971E-07	0	0	0	1.30258E-12	0	1.30258E-12	1.303E-06
396166.283768477.2	396166.28	3768477	0	0	0	0	0	0	2.57641E-07	0	0	0	2.38062E-12	0	2.38062E-12	2.381E-06
396266.283768477.2	396266.28	3768477	0	0	0	0	0	0	2.77657E-07	0	0	0	2.56557E-12	0	2.56557E-12	2.566E-06
396366.283768477.2	396366.28	3768477	0	0	0	0	0	0	3.07757E-07	0	0	0	2.8437E-12	0	2.8437E-12	2.844E-06
396466.283768477.2	396466.28	3768477	0	0	0	0	0	0	3.44617E-07	0	0	0	3.18429E-12	0	3.18429E-12	3.184E-06
397166.283768477.2	397166.28	3768477	0	0	0	0	0	0	1.2268E-06	0	0	0	1.13357E-11	0	1.13357E-11	1.134E-05
397266.283768477.2	397266.28	3768477	0	0	0	0	0	0	6.70005E-06	0	0	0	6.1909E-11	0	6.1909E-11	6.191E-05
397366.283768477.2	397366.28	3768477	0	0	0	0	0	0	2.7145E-06	0	0	0	2.50822E-11	0	2.50822E-11	2.508E-05
397466.283768477.2	397466.28	3768477	0	0	0	0	0	0	8.8282E-07	0	0	0	8.15733E-12	0	8.15733E-12	8.157E-06
397566.283768477.2	397566.28	3768477	0	0	0	0	0	0	5.27707E-07	0	0	0	4.87605E-12	0	4.87605E-12	4.876E-06
397666.283768477.2	397666.28	3768477	0	0	0	0	0	0	3.27457E-07	0	0	0	3.02573E-12	0	3.02573E-12	3.026E-06
397766.283768477.2	397766.28	3768477	0	0	0	0	0	0	2.07168E-07	0	0	0	1.91425E-12	0	1.91425E-12	1.914E-06
397866.283768477.2	397866.28	3768477	0	0	0	0	0	0	1.61501E-07	0	0	0	1.49228E-12	0	1.49228E-12	1.492E-06
396166.283768577.2	396166.28	3768577	0	0	0	0	0	0	3.27836E-07	0	0	0	3.02923E-12	0	3.02923E-12	3.029E-06
396266.283768577.2	396266.28	3768577	0	0	0	0	0	0	3.69551E-07	0	0	0	3.41468E-12	0	3.41468E-12	3.415E-06
396366.283768577.2	396366.28	3768577	0	0	0	0	0	0	3.98699E-07	0	0	0	3.68401E-12	0	3.68401E-12	3.684E-06
396466.283768577.2	396466.28	3768577	0	0	0	0	0	0	4.78759E-07	0	0	0	4.42377E-12	0	4.42377E-12	4.424E-06
396566.283768577.2	396566.28	3768577	0	0	0	0	0	0	4.68876E-07	0	0	0	4.33245E-12	0	4.33245E-12	4.332E-06
396866.283768577.2	396866.28	3768577	0	0	0	0	0	0	6.0002E-07	0	0	0	5.54424E-12	0	5.54424E-12	5.544E-06
396966.283768577.2	396966.28	3768577	0	0	0	0	0	0	6.96704E-07	0	0	0	6.43761E-12	0	6.43761E-12	6.438E-06
397066.283768577.2	397066.28	3768577	0	0	0	0	0	0	8.61054E-07	0	0	0	7.95621E-12	0	7.95621E-12	7.956E-06
397166.283768577.2	397166.28	3768577	0	0	0	0	0	0	1.47425E-06	0	0	0	1.36222E-11	0	1.36222E-11	1.362E-05
397266.283768577.2	397266.28	3768577	0	0	0	0	0	0	6.49954E-06	0	0	0	6.00563E-11	0	6.00563E-11	6.006E-05
397366.283768577.2	397366.28	3768577	0	0	0	0	0	0	2.72239E-06	0	0	0	2.51551E-11	0	2.51551E-11	2.516E-05
397466.283768577.2	397466.28	3768577	0	0	0	0	0	0	8.72314E-07	0	0	0	8.06025E-12	0	8.06025E-12	8.06E-06
397566.283768577.2	397566.28	3768577	0	0	0	0	0	0	5.22169E-07	0	0	0	4.82488E-12	0	4.82488E-12	4.825E-06
397666.283768577.2	397666.28	3768577	0	0	0	0	0	0	3.47143E-07	0	0	0	3.20763E-12	0	3.20763E-12	3.208E-06
397766.283768577.2	397766.28	3768577	0	0	0	0	0	0	2.47039E-07	0	0	0	2.28266E-12	0	2.28266E-12	2.283E-06
397866.283768577.2	397866.28	3768577	0	0	0	0	0	0	1.80373E-07	0	0	0	1.66666E-12	0	1.66666E-12	1.667E-06
396166.283768677.2	396166.28	3768677	0	0	0	0	0	0	5.75926E-07	0	0	0	5.3216E-12	0	5.3216E-12	5.322E-06
396266.283768677.2	396266.28	3768677	0	0	0	0	0	0	6.57528E-07	0	0	0	6.07562E-12	0	6.07562E-12	6.076E-06
396366.283768677.2	396366.28	3768677	0	0	0	0	0	0	6.38467E-07	0	0	0	5.89949E-12	0	5.89949E-12	5.899E-06
396466.283768677.2	396466.28	3768677	0	0	0	0	0	0	7.83836E-07	0	0	0	7.24271E-12	0	7.24271E-12	7.243E-06
396566.283768677.2	396566.28	3768677	0	0	0	0	0	0	7.92388E-07	0	0	0	7.32173E-12	0	7.32173E-12	7.322E-06
396666.283768677.2	396666.28	3768677	0	0	0	0	0	0	8.08991E-07	0	0	0	7.47515E-12	0	7.47515E-12	7.475E-06
396766.283768677.2	396766.28	3768677	0	0	0	0	0	0	8.39518E-07	0	0	0	7.75722E-12	0	7.75722E-12	7.757E-06
396866.283768677.2	396866.28	3768677	0	0	0	0	0	0	9.32354E-07	0	0	0	8.61503E-12	0	8.61503E-12	8.615E-06
396966.283768677.2	396966.28	3768677	0	0	0	0	0	0	1.02056E-06	0	0	0	9.43008E-12	0	9.43008E-12	9.43E-06
397066.283768677.2	397066.28	3768677	0	0	0	0	0	0	1.18384E-06	0	0	0	1.09388E-11	0	1.09388E-11	1.094E-05

Garvey Reservoir Rehab - Unmitigated Surge Tank Telemetry			Demolition - 2025	Demolition - 2026	Site Preparation - 2025	ite Preparation - 202	Grading - 2025	Grading - 2026	Infrastructure - 2025	nfrastructure - 2026	Paving - 2025	rchitectural Coating - 202	Child Risk			
Unique Identifier	X (UTM)	Y (UTM)	1900	1900	1900	1900	1900	1900	2025	1900	2025	1900	3rd Trimester	0<2	Total	per million
397166.283768677.2	397166.28	3768677	0	0	0	0	0	0	1.85806E-06	0	0	0	1.71687E-11	0	1.71687E-11	1.717E-05
397366.283768677.2	397366.28	3768677	0	0	0	0	0	0	2.47083E-06	0	0	0	2.28307E-11	0	2.28307E-11	2.283E-05
397466.283768677.2	397466.28	3768677	0	0	0	0	0	0	9.95508E-07	0	0	0	9.19858E-12	0	9.19858E-12	9.199E-06
397566.283768677.2	397566.28	3768677	0	0	0	0	0	0	5.42881E-07	0	0	0	5.01627E-12	0	5.01627E-12	5.016E-06
397666.283768677.2	397666.28	3768677	0	0	0	0	0	0	3.55687E-07	0	0	0	3.28658E-12	0	3.28658E-12	3.287E-06
397766.283768677.2	397766.28	3768677	0	0	0	0	0	0	2.62349E-07	0	0	0	2.42413E-12	0	2.42413E-12	2.424E-06
397866.283768677.2	397866.28	3768677	0	0	0	0	0	0	1.9264E-07	0	0	0	1.78001E-12	0	1.78001E-12	1.78E-06
396166.283768777.2	396166.28	3768777	0	0	0	0	0	0	1.67232E-06	0	0	0	1.54524E-11	0	1.54524E-11	1.545E-05
396266.283768777.2	396266.28	3768777	0	0	0	0	0	0	2.07798E-06	0	0	0	1.92007E-11	0	1.92007E-11	1.92E-05
396366.283768777.2	396366.28	3768777	0	0	0	0	0	0	1.52339E-06	0	0	0	1.40763E-11	0	1.40763E-11	1.408E-05
396466.283768777.2	396466.28	3768777	0	0	0	0	0	0	1.99065E-06	0	0	0	1.83938E-11	0	1.83938E-11	1.839E-05
396566.283768777.2	396566.28	3768777	0	0	0	0	0	0	2.13172E-06	0	0	0	1.96973E-11	0	1.96973E-11	1.97E-05
396666.283768777.2	396666.28	3768777	0	0	0	0	0	0	2.13097E-06	0	0	0	1.96904E-11	0	1.96904E-11	1.969E-05
396766.283768777.2	396766.28	3768777	0	0	0	0	0	0	2.20438E-06	0	0	0	2.03686E-11	0	2.03686E-11	2.037E-05
396866.283768777.2	396866.28	3768777	0	0	0	0	0	0	2.29184E-06	0	0	0	2.11767E-11	0	2.11767E-11	2.118E-05
396966.283768777.2	396966.28	3768777	0	0	0	0	0	0	2.34836E-06	0	0	0	2.1699E-11	0	2.1699E-11	2.17E-05
397066.283768777.2	397066.28	3768777	0	0	0	0	0	0	2.52992E-06	0	0	0	2.33766E-11	0	2.33766E-11	2.338E-05
397166.283768777.2	397166.28	3768777	0	0	0	0	0	0	3.04664E-06	0	0	0	2.81512E-11	0	2.81512E-11	2.815E-05
397266.283768777.2	397266.28	3768777	0	0	0	0	0	0	9.71729E-06	0	0	0	8.97886E-11	0	8.97886E-11	8.979E-05
397366.283768777.2	397366.28	3768777	0	0	0	0	0	0	3.37633E-06	0	0	0	3.11976E-11	0	3.11976E-11	3.12E-05
397466.283768777.2	397466.28	3768777	0	0	0	0	0	0	1.18753E-06	0	0	0	1.09729E-11	0	1.09729E-11	1.097E-05
397566.283768777.2	397566.28	3768777	0	0	0	0	0	0	6.36904E-07	0	0	0	5.88504E-12	0	5.88504E-12	5.885E-06
397666.283768777.2	397666.28	3768777	0	0	0	0	0	0	4.00561E-07	0	0	0	3.70121E-12	0	3.70121E-12	3.701E-06
397766.283768777.2	397766.28	3768777	0	0	0	0	0	0	2.74228E-07	0	0	0	2.53389E-12	0	2.53389E-12	2.534E-06
397866.283768777.2	397866.28	3768777	0	0	0	0	0	0	1.99621E-07	0	0	0	1.84451E-12	0	1.84451E-12	1.845E-06
396166.283768877.2	396166.28	3768877	0	0	0	0	0	0	6.73295E-06	0	0	0	6.2213E-11	0	6.2213E-11	6.221E-05
396266.283768877.2	396266.28	3768877	0	0	0	0	0	0	8.6713E-06	0	0	0	8.01236E-11	0	8.01236E-11	8.012E-05
396366.283768877.2	396366.28	3768877	0	0	0	0	0	0	8.49094E-06	0	0	0	7.8457E-11	0	7.8457E-11	7.846E-05
396466.283768877.2	396466.28	3768877	0	0	0	0	0	0	9.35342E-06	0	0	0	8.64264E-11	0	8.64264E-11	8.643E-05
396566.283768877.2	396566.28	3768877	0	0	0	0	0	0	8.82157E-06	0	0	0	8.15121E-11	0	8.15121E-11	8.151E-05
396666.283768877.2	396666.28	3768877	0	0	0	0	0	0	9.58412E-06	0	0	0	8.85581E-11	0	8.85581E-11	8.856E-05
396766.283768877.2	396766.28	3768877	0	0	0	0	0	0	9.27598E-06	0	0	0	8.57108E-11	0	8.57108E-11	8.571E-05
396866.283768877.2	396866.28	3768877	0	0	0	0	0	0	9.01067E-06	0	0	0	8.32593E-11	0	8.32593E-11	8.326E-05
396966.283768877.2	396966.28	3768877	0	0	0	0	0	0	8.6645E-06	0	0	0	8.00607E-11	0	8.00607E-11	8.006E-05
397066.283768877.2	397066.28	3768877	0	0	0	0	0	0	8.7596E-06	0	0	0	8.09394E-11	0	8.09394E-11	8.094E-05
397166.283768877.2	397166.28	3768877	0	0	0	0	0	0	9.00308E-06	0	0	0	8.31892E-11	0	8.31892E-11	8.319E-05
397266.283768877.2	397266.28	3768877	0	0	0	0	0	0	9.45846E-06	0	0	0	8.7397E-11	0	8.7397E-11	8.74E-05
397366.283768877.2	397366.28	3768877	0	0	0	0	0	0	4.65064E-06	0	0	0	4.29723E-11	0	4.29723E-11	4.297E-05
397466.283768877.2	397466.28	3768877	0	0	0	0	0	0	1.2446E-06	0	0	0	1.15002E-11	0	1.15002E-11	1.15E-05
397566.283768877.2	397566.28	3768877	0	0	0	0	0	0	6.36416E-07	0	0	0	5.88054E-12	0	5.88054E-12	5.881E-06
397666.283768877.2	397666.28	3768877	0	0	0	0	0	0	3.94762E-07	0	0	0	3.64764E-12	0	3.64764E-12	3.648E-06
397766.283768877.2	397766.28	3768877	0	0	0	0	0	0	2.72878E-07	0	0	0	2.52141E-12	0	2.52141E-12	2.521E-06
397866.283768877.2	397866.28	3768877	0	0	0	0	0	0	2.01962E-07	0	0	0	1.86615E-12	0	1.86615E-12	1.866E-06
3964253767739	396425	3767739	0	0	0	0	0	0	9.0768E-08	0	0	0	8.38704E-13	0	8.38704E-13	8.387E-07
3964753767739	396475	3767739	0	0	0	0	0	0	9.29366E-08	0	0	0	8.58742E-13	0	8.58742E-13	8.587E-07
3965253767739	396525	3767739	0	0	0	0	0	0	8.6624E-08	0	0	0	8.00413E-13	0	8.00413E-13	8.004E-07
3965753767739	396575	3767739	0	0	0	0	0	0	8.91282E-08	0	0	0	8.23552E-13	0	8.23552E-13	8.236E-07
3966253767739	396625	3767739	0	0	0	0	0	0	8.56001E-08	0	0	0	7.90952E-13	0	7.90952E-13	7.91E-07
3966753767739	396675	3767739	0	0	0	0	0	0	8.75942E-08	0	0	0	8.09377E-13	0	8.09377E-13	8.094E-07
3967253767739	396725	3767739	0	0	0	0	0	0	9.15443E-08	0	0	0	8.45877E-13	0	8.45877E-13	8.459E-07
3967753767739	396775	3767739	0	0	0	0	0	0	9.23137E-08	0	0	0	8.52987E-13	0	8.52987E-13	8.53E-07
3968253767739	396825	3767739	0	0	0	0	0	0	9.75158E-08	0	0	0	9.01054E-13	0	9.01054E-13	9.011E-07
3968753767739	396875	3767739	0	0	0	0	0	0	1.00356E-07	0	0	0	9.27297E-13	0	9.27297E-13	9.273E-07
3969253767739	396925	3767739	0	0	0	0	0	0	1.00079E-07	0	0	0	9.24736E-13	0	9.24736E-13	9.247E-07
3969753767739	396975	3767739	0	0	0	0	0	0	9.94142E-08	0	0	0	9.18596E-13	0	9.18596E-13	9.186E-07
3970253767739	397025	3767739	0	0	0	0	0	0	9.89956E-08	0	0	0	9.14728E-13	0	9.14728E-13	9.147E-07
3970753767739	397075	3767739	0	0	0	0	0	0	9.95011E-08	0	0	0	9.19398E-13	0	9.19398E-13	9.194E-07
3971253767739	397125	3767739	0	0	0	0	0	0	9.96226E-08	0	0	0	9.20521E-13	0	9.20521E-13	9.205E-07
3971753767739	397175	3767739	0	0	0	0	0	0	9.83126E-08	0	0	0	9.08417E-13	0	9.08417E-13	9.084E-07
3972253767739	397225	3767739	0	0	0	0	0	0	9.62264E-08	0	0	0	8.8914E-13	0	8.8914E-13	8.891E-07
3972753767739	397275	3767739	0	0	0	0	0	0	9.0753E-08	0	0	0	8.38565E-13	0	8.38565E-13	8.386E-07
3973253767739	397325	3767739	0	0	0	0	0	0	9.07893E-08	0	0	0	8.38901E-13	0	8.38901E-13	8.389E-07
3973753767739	397375	3767739	0	0	0	0	0	0	9.04884E-08	0	0	0	8.36121E-13	0	8.36121E-13	8.361E-07
3974253767739	397425	3767739	0	0	0	0	0	0	8.80578E-08	0	0	0	8.13661E-13	0	8.13661E-13	8.137E-07
3974753767739	397475	3767739	0	0	0	0	0	0	7.77992E-08	0	0	0	7.18871E-13	0	7.18871E-13	7.189E-07
3975253767739	397525	3767739	0	0	0	0	0	0	7.52087E-08	0	0	0	6.94935E-13	0	6.94935E-13	6.949E-07
3964253767789	396425	3767789	0	0	0	0	0	0	9.69611E-08	0	0	0	8.95929E-13	0	8.95929E-13	8.959E-07
3964753767789	396475	3767789	0	0	0	0	0	0	9.3413E-08	0	0	0	8.63144E-13	0	8.63144E-13	8.631E-07
3965253767789	396525	3767789	0	0	0	0	0	0	8.84707E-08	0	0	0	8.17477E-13	0	8.17477E-13	8.175E-07
3965753767789	396575	3767789	0	0	0	0	0	0	8.95415E-08	0	0	0	8.27371E-13	0	8.27371E-13	8.274E-07
3966253767789	396625	3767789	0	0	0	0	0	0	9.1899E-08	0	0	0	8.49154E-13	0	8.49154E-13	8.492E-07

Garvey Reservoir Rehab - Unmitigated Surge Tank Telemetry			Demolition - 2025	Demolition - 2026	Site Preparation - 2025	ite Preparation - 202	Grading - 2025	Grading - 2026	Infrastructure - 2025	nfrastructure - 2026	Paving - 2025	rchitectural Coating - 202	Child Risk			
Unique Identifier	X (UTM)	Y (UTM)	1900	1900	1900	1900	1900	1900	2025	1900	2025	1900	3rd Trimester	0<2	Total	per million
3966753767789	396675	3767789	0	0	0	0	0	0	9.46584E-08	0	0	0	8.74651E-13	0	8.74651E-13	8.747E-07
3967253767789	396725	3767789	0	0	0	0	0	0	1.02105E-07	0	0	0	9.4346E-13	0	9.4346E-13	9.435E-07
3967753767789	396775	3767789	0	0	0	0	0	0	1.04588E-07	0	0	0	9.66401E-13	0	9.66401E-13	9.664E-07
3968253767789	396825	3767789	0	0	0	0	0	0	1.09274E-07	0	0	0	1.0097E-12	0	1.0097E-12	1.01E-06
3968753767789	396875	3767789	0	0	0	0	0	0	1.10835E-07	0	0	0	1.02412E-12	0	1.02412E-12	1.024E-06
3969253767789	396925	3767789	0	0	0	0	0	0	1.10785E-07	0	0	0	1.02366E-12	0	1.02366E-12	1.024E-06
3969753767789	396975	3767789	0	0	0	0	0	0	1.09421E-07	0	0	0	1.01106E-12	0	1.01106E-12	1.011E-06
3970253767789	397025	3767789	0	0	0	0	0	0	1.0881E-07	0	0	0	1.00541E-12	0	1.00541E-12	1.005E-06
3970753767789	397075	3767789	0	0	0	0	0	0	1.09829E-07	0	0	0	1.01483E-12	0	1.01483E-12	1.015E-06
3971253767789	397125	3767789	0	0	0	0	0	0	1.10623E-07	0	0	0	1.02217E-12	0	1.02217E-12	1.022E-06
3971753767789	397175	3767789	0	0	0	0	0	0	1.10126E-07	0	0	0	1.01757E-12	0	1.01757E-12	1.018E-06
3972253767789	397225	3767789	0	0	0	0	0	0	1.08747E-07	0	0	0	1.00483E-12	0	1.00483E-12	1.005E-06
3972753767789	397275	3767789	0	0	0	0	0	0	1.02727E-07	0	0	0	9.4921E-13	0	9.4921E-13	9.492E-07
3973253767789	397325	3767789	0	0	0	0	0	0	1.00232E-07	0	0	0	9.26148E-13	0	9.26148E-13	9.261E-07
3973753767789	397375	3767789	0	0	0	0	0	0	1.00552E-07	0	0	0	9.29105E-13	0	9.29105E-13	9.291E-07
3974253767789	397425	3767789	0	0	0	0	0	0	9.8493E-08	0	0	0	9.10083E-13	0	9.10083E-13	9.101E-07
3974753767789	397475	3767789	0	0	0	0	0	0	8.58282E-08	0	0	0	7.9306E-13	0	7.9306E-13	7.931E-07
3975253767789	397525	3767789	0	0	0	0	0	0	8.32442E-08	0	0	0	7.69183E-13	0	7.69183E-13	7.692E-07
3964253767839	396425	3767839	0	0	0	0	0	0	1.0352E-07	0	0	0	9.56532E-13	0	9.56532E-13	9.565E-07
3964753767839	396475	3767839	0	0	0	0	0	0	1.02861E-07	0	0	0	9.50446E-13	0	9.50446E-13	9.504E-07
3965253767839	396525	3767839	0	0	0	0	0	0	9.32844E-08	0	0	0	8.61956E-13	0	8.61956E-13	8.62E-07
3965753767839	396575	3767839	0	0	0	0	0	0	9.5963E-08	0	0	0	8.86706E-13	0	8.86706E-13	8.867E-07
3966253767839	396625	3767839	0	0	0	0	0	0	9.88542E-08	0	0	0	9.13421E-13	0	9.13421E-13	9.134E-07
3966753767839	396675	3767839	0	0	0	0	0	0	1.10261E-07	0	0	0	1.01882E-12	0	1.01882E-12	1.019E-06
3967253767839	396725	3767839	0	0	0	0	0	0	1.15507E-07	0	0	0	1.0673E-12	0	1.0673E-12	1.067E-06
3967753767839	396775	3767839	0	0	0	0	0	0	1.18535E-07	0	0	0	1.09527E-12	0	1.09527E-12	1.095E-06
3968253767839	396825	3767839	0	0	0	0	0	0	1.21489E-07	0	0	0	1.12257E-12	0	1.12257E-12	1.123E-06
3968753767839	396875	3767839	0	0	0	0	0	0	1.22916E-07	0	0	0	1.13575E-12	0	1.13575E-12	1.136E-06
3969253767839	396925	3767839	0	0	0	0	0	0	1.23286E-07	0	0	0	1.13918E-12	0	1.13918E-12	1.139E-06
3969753767839	396975	3767839	0	0	0	0	0	0	1.22016E-07	0	0	0	1.12744E-12	0	1.12744E-12	1.127E-06
3970253767839	397025	3767839	0	0	0	0	0	0	1.21042E-07	0	0	0	1.11844E-12	0	1.11844E-12	1.118E-06
3970753767839	397075	3767839	0	0	0	0	0	0	1.23654E-07	0	0	0	1.14258E-12	0	1.14258E-12	1.143E-06
3971253767839	397125	3767839	0	0	0	0	0	0	1.25927E-07	0	0	0	1.16358E-12	0	1.16358E-12	1.164E-06
3971753767839	397175	3767839	0	0	0	0	0	0	1.24263E-07	0	0	0	1.1482E-12	0	1.1482E-12	1.148E-06
3972253767839	397225	3767839	0	0	0	0	0	0	1.19468E-07	0	0	0	1.10389E-12	0	1.10389E-12	1.104E-06
3972753767839	397275	3767839	0	0	0	0	0	0	1.13171E-07	0	0	0	1.04571E-12	0	1.04571E-12	1.046E-06
3973253767839	397325	3767839	0	0	0	0	0	0	1.07894E-07	0	0	0	9.96947E-13	0	9.96947E-13	9.969E-07
3973753767839	397375	3767839	0	0	0	0	0	0	1.12239E-07	0	0	0	1.0371E-12	0	1.0371E-12	1.037E-06
3974753767839	397475	3767839	0	0	0	0	0	0	1.05798E-07	0	0	0	9.7758E-13	0	9.7758E-13	9.776E-07
3975253767839	397525	3767839	0	0	0	0	0	0	9.04213E-08	0	0	0	8.35501E-13	0	8.35501E-13	8.355E-07
3964253767889	396425	3767889	0	0	0	0	0	0	1.09465E-07	0	0	0	1.01146E-12	0	1.01146E-12	1.011E-06
3964753767889	396475	3767889	0	0	0	0	0	0	9.73195E-08	0	0	0	8.9924E-13	0	8.9924E-13	8.992E-07
3965253767889	396525	3767889	0	0	0	0	0	0	9.98772E-08	0	0	0	9.22873E-13	0	9.22873E-13	9.229E-07
3965753767889	396575	3767889	0	0	0	0	0	0	1.04401E-07	0	0	0	9.64669E-13	0	9.64669E-13	9.647E-07
3974753767889	397475	3767889	0	0	0	0	0	0	1.14784E-07	0	0	0	1.06061E-12	0	1.06061E-12	1.061E-06
3975253767889	397525	3767889	0	0	0	0	0	0	9.97465E-08	0	0	0	9.21666E-13	0	9.21666E-13	9.217E-07
3964253767939	396425	3767939	0	0	0	0	0	0	1.16207E-07	0	0	0	1.07376E-12	0	1.07376E-12	1.074E-06
3964753767939	396475	3767939	0	0	0	0	0	0	1.04453E-07	0	0	0	9.65153E-13	0	9.65153E-13	9.652E-07
3965253767939	396525	3767939	0	0	0	0	0	0	1.08194E-07	0	0	0	9.99724E-13	0	9.99724E-13	9.997E-07
3974753767939	397475	3767939	0	0	0	0	0	0	1.21961E-07	0	0	0	1.12693E-12	0	1.12693E-12	1.127E-06
3975253767939	397525	3767939	0	0	0	0	0	0	1.1149E-07	0	0	0	1.03017E-12	0	1.03017E-12	1.03E-06
3964253767989	396425	3767989	0	0	0	0	0	0	1.14007E-07	0	0	0	1.05343E-12	0	1.05343E-12	1.053E-06
3964753767989	396475	3767989	0	0	0	0	0	0	1.13513E-07	0	0	0	1.04887E-12	0	1.04887E-12	1.049E-06
3974753767989	397475	3767989	0	0	0	0	0	0	1.40162E-07	0	0	0	1.29511E-12	0	1.29511E-12	1.295E-06
3975253767989	397525	3767989	0	0	0	0	0	0	1.27033E-07	0	0	0	1.1738E-12	0	1.1738E-12	1.174E-06
3964253768039	396425	3768039	0	0	0	0	0	0	1.22905E-07	0	0	0	1.13566E-12	0	1.13566E-12	1.136E-06
3964753768039	396475	3768039	0	0	0	0	0	0	1.26995E-07	0	0	0	1.17345E-12	0	1.17345E-12	1.173E-06
3974753768039	397475	3768039	0	0	0	0	0	0	1.87124E-07	0	0	0	1.72904E-12	0	1.72904E-12	1.729E-06
3975253768039	397525	3768039	0	0	0	0	0	0	1.75103E-07	0	0	0	1.61797E-12	0	1.61797E-12	1.618E-06
3964253768089	396425	3768089	0	0	0	0	0	0	1.35536E-07	0	0	0	1.25236E-12	0	1.25236E-12	1.252E-06
3964753768089	396475	3768089	0	0	0	0	0	0	1.42454E-07	0	0	0	1.31629E-12	0	1.31629E-12	1.316E-06
3974753768089	397475	3768089	0	0	0	0	0	0	2.51867E-07	0	0	0	2.32728E-12	0	2.32728E-12	2.327E-06
3975253768089	397525	3768089	0	0	0	0	0	0	2.31961E-07	0	0	0	2.14334E-12	0	2.14334E-12	2.143E-06
3964253768139	396425	3768139	0	0	0	0	0	0	1.6877E-07	0	0	0	1.55945E-12	0	1.55945E-12	1.559E-06
3964753768139	396475	3768139	0	0	0	0	0	0	1.55458E-07	0	0	0	1.43644E-12	0	1.43644E-12	1.436E-06
3974253768139	397425	3768139	0	0	0	0	0	0	5.34334E-07	0	0	0	4.93729E-12	0	4.93729E-12	4.937E-06
3974753768139	397475	3768139	0	0	0	0	0	0	3.87108E-07	0	0	0	3.57691E-12	0	3.57691E-12	3.577E-06
3975253768139	397525	3768139	0	0	0	0	0	0	2.92081E-07	0	0	0	2.69886E-12	0	2.69886E-12	2.699E-06
3964253768189	396425	3768189	0	0	0	0	0	0	1.81825E-07	0	0	0	1.68007E-12	0	1.68007E-12	1.68E-06
3964753768189	396475	3768189	0	0	0	0	0	0	1.70179E-07	0	0	0	1.57247E-12	0	1.57247E-12	1.572E-06
3973753768189	397375	3768189	0	0	0	0	0	0	3.16724E-06	0	0	0	2.92656E-11	0	2.92656E-11	2.927E-05

Garvey Reservoir Rehab - Unmitigated Surge Tank Telemetry			Demolition - 2025	Demolition - 2026	Site Preparation - 2025	ite Preparation - 202	Grading - 2025	Grading - 2026	Infrastructure - 2025	nfrastructure - 2026	Paving - 2025	rchitectural Coating - 202	Child Risk			
Unique Identifier	X (UTM)	Y (UTM)	1900	1900	1900	1900	1900	1900	2025	1900	2025	1900	3rd Trimester	0<2	Total	per million
3974253768189	397425	3768189	0	0	0	0	0	0	9.14856E-07	0	0	0	8.45334E-12	0	8.45334E-12	8.453E-06
3974753768189	397475	3768189	0	0	0	0	0	0	5.24195E-07	0	0	0	4.84361E-12	0	4.84361E-12	4.844E-06
3975253768189	397525	3768189	0	0	0	0	0	0	3.60921E-07	0	0	0	3.33494E-12	0	3.33494E-12	3.335E-06
3964253768239	396425	3768239	0	0	0	0	0	0	1.96791E-07	0	0	0	1.81837E-12	0	1.81837E-12	1.818E-06
3964753768239	396475	3768239	0	0	0	0	0	0	1.88175E-07	0	0	0	1.73875E-12	0	1.73875E-12	1.739E-06
3973753768239	397375	3768239	0	0	0	0	0	0	4.61395E-06	0	0	0	4.26332E-11	0	4.26332E-11	4.263E-05
3974253768239	397425	3768239	0	0	0	0	0	0	1.17331E-06	0	0	0	1.08415E-11	0	1.08415E-11	1.084E-05
3974753768239	397475	3768239	0	0	0	0	0	0	6.32611E-07	0	0	0	5.84538E-12	0	5.84538E-12	5.845E-06
3975253768239	397525	3768239	0	0	0	0	0	0	4.29129E-07	0	0	0	3.96518E-12	0	3.96518E-12	3.965E-06
3964253768289	396425	3768289	0	0	0	0	0	0	2.10651E-07	0	0	0	1.94643E-12	0	1.94643E-12	1.946E-06
3964753768289	396475	3768289	0	0	0	0	0	0	2.09652E-07	0	0	0	1.9372E-12	0	1.9372E-12	1.937E-06
3973253768289	397325	3768289	0	0	0	0	0	0	1.22233E-05	0	0	0	1.12945E-10	0	1.12945E-10	0.0001129
3973753768289	397375	3768289	0	0	0	0	0	0	3.23571E-06	0	0	0	2.98982E-11	0	2.98982E-11	2.99E-05
3974253768289	397425	3768289	0	0	0	0	0	0	1.42608E-06	0	0	0	1.31771E-11	0	1.31771E-11	1.318E-05
3974753768289	397475	3768289	0	0	0	0	0	0	7.86182E-07	0	0	0	7.26439E-12	0	7.26439E-12	7.264E-06
3975253768289	397525	3768289	0	0	0	0	0	0	5.10114E-07	0	0	0	4.71349E-12	0	4.71349E-12	4.713E-06
3964253768339	396425	3768339	0	0	0	0	0	0	2.38691E-07	0	0	0	2.20552E-12	0	2.20552E-12	2.206E-06
3964753768339	396475	3768339	0	0	0	0	0	0	2.3691E-07	0	0	0	2.18907E-12	0	2.18907E-12	2.189E-06
3965253768339	396525	3768339	0	0	0	0	0	0	2.52547E-07	0	0	0	2.33355E-12	0	2.33355E-12	2.334E-06
3972753768339	397275	3768339	0	0	0	0	0	0	9.93064E-06	0	0	0	9.176E-11	0	9.176E-11	9.176E-05
3973253768339	397325	3768339	0	0	0	0	0	0	7.32089E-06	0	0	0	6.76456E-11	0	6.76456E-11	6.765E-05
3973753768339	397375	3768339	0	0	0	0	0	0	2.6966E-06	0	0	0	2.49168E-11	0	2.49168E-11	2.492E-05
3974253768339	397425	3768339	0	0	0	0	0	0	1.41789E-06	0	0	0	1.31014E-11	0	1.31014E-11	1.31E-05
3974753768339	397475	3768339	0	0	0	0	0	0	8.52659E-07	0	0	0	7.87864E-12	0	7.87864E-12	7.879E-06
3975253768339	397525	3768339	0	0	0	0	0	0	5.66484E-07	0	0	0	5.23435E-12	0	5.23435E-12	5.234E-06
3964253768389	396425	3768389	0	0	0	0	0	0	2.65247E-07	0	0	0	2.4509E-12	0	2.4509E-12	2.451E-06
3964753768389	396475	3768389	0	0	0	0	0	0	2.69992E-07	0	0	0	2.49475E-12	0	2.49475E-12	2.495E-06
3965253768389	396525	3768389	0	0	0	0	0	0	2.82988E-07	0	0	0	2.61483E-12	0	2.61483E-12	2.615E-06
3972253768389	397225	3768389	0	0	0	0	0	0	2.38731E-06	0	0	0	2.20589E-11	0	2.20589E-11	2.206E-05
3972753768389	397275	3768389	0	0	0	0	0	0	9.45567E-06	0	0	0	8.73712E-11	0	8.73712E-11	8.737E-05
3973253768389	397325	3768389	0	0	0	0	0	0	7.32333E-06	0	0	0	6.76682E-11	0	6.76682E-11	6.767E-05
3973753768389	397375	3768389	0	0	0	0	0	0	2.59588E-06	0	0	0	2.39862E-11	0	2.39862E-11	2.399E-05
3974253768389	397425	3768389	0	0	0	0	0	0	1.42028E-06	0	0	0	1.31235E-11	0	1.31235E-11	1.312E-05
3974753768389	397475	3768389	0	0	0	0	0	0	8.98111E-07	0	0	0	8.29862E-12	0	8.29862E-12	8.299E-06
3975253768389	397525	3768389	0	0	0	0	0	0	6.16887E-07	0	0	0	5.70009E-12	0	5.70009E-12	5.7E-06
3964253768439	396425	3768439	0	0	0	0	0	0	3.01042E-07	0	0	0	2.78166E-12	0	2.78166E-12	2.782E-06
3964753768439	396475	3768439	0	0	0	0	0	0	3.10017E-07	0	0	0	2.86458E-12	0	2.86458E-12	2.865E-06
3965253768439	396525	3768439	0	0	0	0	0	0	3.21193E-07	0	0	0	2.96785E-12	0	2.96785E-12	2.968E-06
3971753768439	397175	3768439	0	0	0	0	0	0	1.28612E-06	0	0	0	1.18839E-11	0	1.18839E-11	1.188E-05
3972253768439	397225	3768439	0	0	0	0	0	0	2.50443E-06	0	0	0	2.31411E-11	0	2.31411E-11	2.314E-05
3972753768439	397275	3768439	0	0	0	0	0	0	9.50244E-06	0	0	0	8.78034E-11	0	8.78034E-11	8.78E-05
3973253768439	397325	3768439	0	0	0	0	0	0	7.1501E-06	0	0	0	6.60676E-11	0	6.60676E-11	6.607E-05
3973753768439	397375	3768439	0	0	0	0	0	0	2.39955E-06	0	0	0	2.2172E-11	0	2.2172E-11	2.217E-05
3974253768439	397425	3768439	0	0	0	0	0	0	1.31306E-06	0	0	0	1.21328E-11	0	1.21328E-11	1.213E-05
3974753768439	397475	3768439	0	0	0	0	0	0	9.29808E-07	0	0	0	8.5915E-12	0	8.5915E-12	8.591E-06
3975253768439	397525	3768439	0	0	0	0	0	0	6.52985E-07	0	0	0	6.03364E-12	0	6.03364E-12	6.034E-06
3964253768489	396425	3768489	0	0	0	0	0	0	3.43383E-07	0	0	0	3.17289E-12	0	3.17289E-12	3.173E-06
3964753768489	396475	3768489	0	0	0	0	0	0	3.58047E-07	0	0	0	3.30838E-12	0	3.30838E-12	3.308E-06
3965253768489	396525	3768489	0	0	0	0	0	0	3.7197E-07	0	0	0	3.43704E-12	0	3.43704E-12	3.437E-06
3970753768489	397075	3768489	0	0	0	0	0	0	7.32546E-07	0	0	0	6.76879E-12	0	6.76879E-12	6.769E-06
3971253768489	397125	3768489	0	0	0	0	0	0	9.30641E-07	0	0	0	8.5992E-12	0	8.5992E-12	8.599E-06
3971753768489	397175	3768489	0	0	0	0	0	0	1.34596E-06	0	0	0	1.24368E-11	0	1.24368E-11	1.244E-05
3972253768489	397225	3768489	0	0	0	0	0	0	2.48988E-06	0	0	0	2.30067E-11	0	2.30067E-11	2.301E-05
3972753768489	397275	3768489	0	0	0	0	0	0	9.32927E-06	0	0	0	8.62032E-11	0	8.62032E-11	8.62E-05
3973253768489	397325	3768489	0	0	0	0	0	0	6.17087E-06	0	0	0	5.70193E-11	0	5.70193E-11	5.702E-05
3973753768489	397375	3768489	0	0	0	0	0	0	2.36365E-06	0	0	0	2.18404E-11	0	2.18404E-11	2.184E-05
3974253768489	397425	3768489	0	0	0	0	0	0	1.30462E-06	0	0	0	1.20548E-11	0	1.20548E-11	1.205E-05
3974753768489	397475	3768489	0	0	0	0	0	0	8.13122E-07	0	0	0	7.51331E-12	0	7.51331E-12	7.513E-06
3975253768489	397525	3768489	0	0	0	0	0	0	5.89061E-07	0	0	0	5.44298E-12	0	5.44298E-12	5.443E-06
3964253768539	396425	3768539	0	0	0	0	0	0	3.99334E-07	0	0	0	3.68987E-12	0	3.68987E-12	3.69E-06
3964753768539	396475	3768539	0	0	0	0	0	0	4.21103E-07	0	0	0	3.89103E-12	0	3.89103E-12	3.891E-06
3965253768539	396525	3768539	0	0	0	0	0	0	4.3514E-07	0	0	0	4.02073E-12	0	4.02073E-12	4.021E-06
3965753768539	396575	3768539	0	0	0	0	0	0	4.18776E-07	0	0	0	3.86952E-12	0	3.86952E-12	3.87E-06
3970253768539	397025	3768539	0	0	0	0	0	0	6.92943E-07	0	0	0	6.40285E-12	0	6.40285E-12	6.403E-06
3970753768539	397075	3768539	0	0	0	0	0	0	8.10826E-07	0	0	0	7.4921E-12	0	7.4921E-12	7.492E-06
3971253768539	397125	3768539	0	0	0	0	0	0	1.0188E-06	0	0	0	9.41381E-12	0	9.41381E-12	9.414E-06
3971753768539	397175	3768539	0	0	0	0	0	0	1.45466E-06	0	0	0	1.34412E-11	0	1.34412E-11	1.344E-05
3972253768539	397225	3768539	0	0	0	0	0	0	2.55131E-06	0	0	0	2.35743E-11	0	2.35743E-11	2.357E-05
3972753768539	397275	3768539	0	0	0	0	0	0	8.49806E-06	0	0	0	7.85228E-11	0	7.85228E-11	7.852E-05
3973253768539	397325	3768539	0	0	0	0	0	0	5.95109E-06	0	0	0	5.49885E-11	0	5.49885E-11	5.499E-05
3973753768539	397375	3768539	0	0	0	0	0	0	2.38068E-06	0	0	0	2.19977E-11	0	2.19977E-11	2.2E-05

Garvey Reservoir Rehab - Unmitigated Surge Tank Telemetry			Demolition - 2025	Demolition - 2026	Site Preparation - 2025	ite Preparation - 202	Grading - 2025	Grading - 2026	Infrastructure - 2025	nfrastructure - 2026	Paving - 2025	rchitectural Coating - 202	Child Risk			
Unique Identifier	X (UTM)	Y (UTM)	1900	1900	1900	1900	1900	1900	2025	1900	2025	1900	3rd Trimester	0<2	Total	per million
3974253768539	397425	3768539	0	0	0	0	0	0	1.27506E-06	0	0	0	1.17816E-11	0	1.17816E-11	1.178E-05
3974753768539	397475	3768539	0	0	0	0	0	0	8.22485E-07	0	0	0	7.59983E-12	0	7.59983E-12	7.6E-06
3975253768539	397525	3768539	0	0	0	0	0	0	5.85696E-07	0	0	0	5.41188E-12	0	5.41188E-12	5.412E-06
3964253768589	396425	3768589	0	0	0	0	0	0	4.66023E-07	0	0	0	4.30609E-12	0	4.30609E-12	4.306E-06
3964753768589	396475	3768589	0	0	0	0	0	0	5.05701E-07	0	0	0	4.67272E-12	0	4.67272E-12	4.673E-06
3965253768589	396525	3768589	0	0	0	0	0	0	5.03894E-07	0	0	0	4.65603E-12	0	4.65603E-12	4.656E-06
3965753768589	396575	3768589	0	0	0	0	0	0	4.86158E-07	0	0	0	4.49214E-12	0	4.49214E-12	4.492E-06
3966253768589	396625	3768589	0	0	0	0	0	0	4.80616E-07	0	0	0	4.44093E-12	0	4.44093E-12	4.441E-06
3968253768589	396825	3768589	0	0	0	0	0	0	5.92152E-07	0	0	0	5.47153E-12	0	5.47153E-12	5.472E-06
3968753768589	396875	3768589	0	0	0	0	0	0	6.27671E-07	0	0	0	5.79973E-12	0	5.79973E-12	5.8E-06
3969253768589	396925	3768589	0	0	0	0	0	0	6.81768E-07	0	0	0	6.29959E-12	0	6.29959E-12	6.3E-06
3969753768589	396975	3768589	0	0	0	0	0	0	7.31863E-07	0	0	0	6.76247E-12	0	6.76247E-12	6.762E-06
3970253768589	397025	3768589	0	0	0	0	0	0	8.05111E-07	0	0	0	7.43929E-12	0	7.43929E-12	7.439E-06
3970753768589	397075	3768589	0	0	0	0	0	0	9.14589E-07	0	0	0	8.45088E-12	0	8.45088E-12	8.451E-06
3971253768589	397125	3768589	0	0	0	0	0	0	1.14892E-06	0	0	0	1.06162E-11	0	1.06162E-11	1.062E-05
3971753768589	397175	3768589	0	0	0	0	0	0	1.62855E-06	0	0	0	1.50479E-11	0	1.50479E-11	1.505E-05
3972253768589	397225	3768589	0	0	0	0	0	0	2.84832E-06	0	0	0	2.63187E-11	0	2.63187E-11	2.632E-05
3972753768589	397275	3768589	0	0	0	0	0	0	9.07695E-06	0	0	0	8.38717E-11	0	8.38717E-11	8.387E-05
3973253768589	397325	3768589	0	0	0	0	0	0	5.91009E-06	0	0	0	5.46098E-11	0	5.46098E-11	5.461E-05
3973753768589	397375	3768589	0	0	0	0	0	0	2.38013E-06	0	0	0	2.19926E-11	0	2.19926E-11	2.199E-05
3974253768589	397425	3768589	0	0	0	0	0	0	1.23782E-06	0	0	0	1.14376E-11	0	1.14376E-11	1.144E-05
3974753768589	397475	3768589	0	0	0	0	0	0	8.16547E-07	0	0	0	7.54496E-12	0	7.54496E-12	7.545E-06
3975253768589	397525	3768589	0	0	0	0	0	0	5.90625E-07	0	0	0	5.45742E-12	0	5.45742E-12	5.457E-06
3964253768639	396425	3768639	0	0	0	0	0	0	5.61717E-07	0	0	0	5.19031E-12	0	5.19031E-12	5.19E-06
3964753768639	396475	3768639	0	0	0	0	0	0	6.36065E-07	0	0	0	5.87729E-12	0	5.87729E-12	5.877E-06
3965253768639	396525	3768639	0	0	0	0	0	0	5.97717E-07	0	0	0	5.52296E-12	0	5.52296E-12	5.523E-06
3965753768639	396575	3768639	0	0	0	0	0	0	6.01335E-07	0	0	0	5.55638E-12	0	5.55638E-12	5.556E-06
3966253768639	396625	3768639	0	0	0	0	0	0	6.1207E-07	0	0	0	5.65557E-12	0	5.65557E-12	5.656E-06
3966753768639	396675	3768639	0	0	0	0	0	0	6.24843E-07	0	0	0	5.7736E-12	0	5.7736E-12	5.774E-06
3967253768639	396725	3768639	0	0	0	0	0	0	6.44125E-07	0	0	0	5.95177E-12	0	5.95177E-12	5.952E-06
3967753768639	396775	3768639	0	0	0	0	0	0	6.79063E-07	0	0	0	6.2746E-12	0	6.2746E-12	6.275E-06
3968253768639	396825	3768639	0	0	0	0	0	0	7.12615E-07	0	0	0	6.58462E-12	0	6.58462E-12	6.585E-06
3968753768639	396875	3768639	0	0	0	0	0	0	7.64108E-07	0	0	0	7.06042E-12	0	7.06042E-12	7.06E-06
3969253768639	396925	3768639	0	0	0	0	0	0	8.22071E-07	0	0	0	7.596E-12	0	7.596E-12	7.596E-06
3969753768639	396975	3768639	0	0	0	0	0	0	8.73162E-07	0	0	0	8.06809E-12	0	8.06809E-12	8.068E-06
3970253768639	397025	3768639	0	0	0	0	0	0	9.42057E-07	0	0	0	8.70469E-12	0	8.70469E-12	8.705E-06
3970753768639	397075	3768639	0	0	0	0	0	0	1.04547E-06	0	0	0	9.6602E-12	0	9.6602E-12	9.66E-06
3971253768639	397125	3768639	0	0	0	0	0	0	1.2571E-06	0	0	0	1.16157E-11	0	1.16157E-11	1.162E-05
3971753768639	397175	3768639	0	0	0	0	0	0	1.8391E-06	0	0	0	1.69934E-11	0	1.69934E-11	1.699E-05
3972253768639	397225	3768639	0	0	0	0	0	0	3.62446E-06	0	0	0	3.34903E-11	0	3.34903E-11	3.349E-05
3972753768639	397275	3768639	0	0	0	0	0	0	1.26254E-05	0	0	0	1.16659E-10	0	1.16659E-10	0.0001167
3973253768639	397325	3768639	0	0	0	0	0	0	5.3237E-06	0	0	0	4.91914E-11	0	4.91914E-11	4.919E-05
3973753768639	397375	3768639	0	0	0	0	0	0	2.34555E-06	0	0	0	2.16731E-11	0	2.16731E-11	2.167E-05
3974253768639	397425	3768639	0	0	0	0	0	0	1.36722E-06	0	0	0	1.26332E-11	0	1.26332E-11	1.263E-05
3974753768639	397475	3768639	0	0	0	0	0	0	8.11605E-07	0	0	0	7.4993E-12	0	7.4993E-12	7.499E-06
3975253768639	397525	3768639	0	0	0	0	0	0	5.96383E-07	0	0	0	5.51063E-12	0	5.51063E-12	5.511E-06
3964253768689	396425	3768689	0	0	0	0	0	0	7.24038E-07	0	0	0	6.69017E-12	0	6.69017E-12	6.69E-06
3964753768689	396475	3768689	0	0	0	0	0	0	8.58881E-07	0	0	0	7.93613E-12	0	7.93613E-12	7.936E-06
3965253768689	396525	3768689	0	0	0	0	0	0	8.91452E-07	0	0	0	8.23709E-12	0	8.23709E-12	8.237E-06
3965753768689	396575	3768689	0	0	0	0	0	0	8.76162E-07	0	0	0	8.09581E-12	0	8.09581E-12	8.096E-06
3966253768689	396625	3768689	0	0	0	0	0	0	8.86462E-07	0	0	0	8.19098E-12	0	8.19098E-12	8.191E-06
3966753768689	396675	3768689	0	0	0	0	0	0	8.80542E-07	0	0	0	8.13628E-12	0	8.13628E-12	8.136E-06
3967253768689	396725	3768689	0	0	0	0	0	0	8.95219E-07	0	0	0	8.2719E-12	0	8.2719E-12	8.272E-06
3967753768689	396775	3768689	0	0	0	0	0	0	9.08079E-07	0	0	0	8.39072E-12	0	8.39072E-12	8.391E-06
3968253768689	396825	3768689	0	0	0	0	0	0	9.5723E-07	0	0	0	8.84488E-12	0	8.84488E-12	8.845E-06
3968753768689	396875	3768689	0	0	0	0	0	0	1.00822E-06	0	0	0	9.31606E-12	0	9.31606E-12	9.316E-06
3969253768689	396925	3768689	0	0	0	0	0	0	1.05176E-06	0	0	0	9.71834E-12	0	9.71834E-12	9.718E-06
3969753768689	396975	3768689	0	0	0	0	0	0	1.09665E-06	0	0	0	1.01331E-11	0	1.01331E-11	1.013E-05
3970253768689	397025	3768689	0	0	0	0	0	0	1.15927E-06	0	0	0	1.07118E-11	0	1.07118E-11	1.071E-05
3970753768689	397075	3768689	0	0	0	0	0	0	1.27162E-06	0	0	0	1.17499E-11	0	1.17499E-11	1.175E-05
3971253768689	397125	3768689	0	0	0	0	0	0	1.48498E-06	0	0	0	1.37213E-11	0	1.37213E-11	1.372E-05
3971753768689	397175	3768689	0	0	0	0	0	0	2.07075E-06	0	0	0	1.91339E-11	0	1.91339E-11	1.913E-05
3972253768689	397225	3768689	0	0	0	0	0	0	4.69595E-06	0	0	0	4.3391E-11	0	4.3391E-11	4.339E-05
3972753768689	397275	3768689	0	0	0	0	0	0	1.28985E-05	0	0	0	1.19183E-10	0	1.19183E-10	0.0001192
3973253768689	397325	3768689	0	0	0	0	0	0	4.31696E-06	0	0	0	3.98891E-11	0	3.98891E-11	3.989E-05
3973753768689	397375	3768689	0	0	0	0	0	0	2.18547E-06	0	0	0	2.01939E-11	0	2.01939E-11	2.019E-05
3974253768689	397425	3768689	0	0	0	0	0	0	1.36516E-06	0	0	0	1.26142E-11	0	1.26142E-11	1.261E-05
3974753768689	397475	3768689	0	0	0	0	0	0	9.31649E-07	0	0	0	8.60852E-12	0	8.60852E-12	8.609E-06
3975253768689	397525	3768689	0	0	0	0	0	0	6.76177E-07	0	0	0	6.24793E-12	0	6.24793E-12	6.248E-06

Garvey Reservoir Rehab - Unmitigated Surge Tank Telemetry

Maximum Individual Non-Cancer Impact Calculations - Sensitive Receptors (Maximum Impacted Senior Residential Receptor) (IMPACT AT ALL OTHER LOCATIONS ON THE PROJECT SITE WOULD BE LESS THAN SHOWN)

Maximum Non-cancer Chronic Hazards / Toxicological Endpoints*

Receptor Group	Pollutant	CREL[1]	CONC	WFrac	$CONC_{WF}$	HI		ALIM	BN	CVS	DEV	ENDC	EYE	HEM	IMMUN	KIDN	NS	REPRO	RESP	SK
Project:																				
MEI - Max	DPM	5.00E+00	2.27E-02	1.00E+00	2.27E-02	0.005		-	-	-	-	-	-	-	-	-	-	-	4.54E-03	-
							Total Risk				-			-				-	0.005	
							Threshold				1.00			1.00				1.00	1.00	
							Over?				NO			NO				NO	NO	

Notes:

1. California Air Resources Board, "Consolidated Table of OEHHA/ARB Approved Risk Assessment Health Values," "OEHHA/ARB Approved Chronic Reference Exposure Levels and Target Organs," "OEHHA/ARB Approved Acute Reference Exposure Levels and Target Organs," and "OEHHA/ARB Approved 8-Hour Reference Exposure Levels and Target Organs," http://www.arb.ca.gov/toxics/healthval/healthval.htm. Tables last updated: May 8, 2018. Downloaded: 08/14/18.

Source: ESA, 2020

Where:

$CONC_{WF}$	Pollutant Concentration ($\mu g/m^3$) multiplied by the weight fraction
CREL	Chronic Reference Exposure Level
HI	Hazard Index
MEI	Maximally Exposed Individual
WFrac	Weight fraction of speciated component

* Key to Toxicological Endpoints

ALIM	Alimentary Tract	EYE	Eye	NS	Nervous System
BN	Bone	HEM	Hematologic System	REPRO	Reproductive System
CVS	Cardiovascular System	IMMUN	Immune System	RESP	Respiratory System
DEV	Developmental System	KIDN	Kidney	SK	Skin
ENDC	Endocrine System				

Chronic HI

Garvey Reservoir Rehab - Mitigated Surge Tank Telemetry

Cancer Risk Summary & Maximum Annual GLC for Chronic Calculations

Cancer Risk Summary

Max Risk: 0.015704

XY	X	Y	Offroad Risk	Haul Risk	Total Risk
7449041451	574490	4145130	0.000438369	4.45911E-07	0.000439
7448041451	574480	4145140	0.000495426	4.5602E-07	0.000496
7449041451	574490	4145140	0.000584774	4.74567E-07	0.000585
7449041451	574490	4145150	0.00067801	4.86932E-07	0.000678
7450041451	574500	4145150	0.00079652	5.3381E-07	0.000797
7446041451	574460	4145160	0.000881472	5.04688E-07	0.000882
7449041451	574490	4145160	0.000941318	5.02709E-07	0.000942
7450041451	574500	4145160	0.000997023	5.03149E-07	0.000998
7451041451	574510	4145160	0.00106769	5.09807E-07	0.001068
7446041451	574460	4145170	0.001105643	4.9695E-07	0.001106
7447041451	574470	4145170	0.001078594	4.90153E-07	0.001079
7448041451	574480	4145170	0.00100573	4.90744E-07	0.001006
7449041451	574490	4145170	0.000958901	4.68374E-07	0.000959
7450041451	574500	4145170	0.000891953	4.21658E-07	0.000892
7451041451	574510	4145170	0.000788405	4.14756E-07	0.000789
7452041451	574520	4145170	0.000690351	4.02581E-07	0.000691
7446041451	574460	4145180	0.000582999	4.15479E-07	0.000583
7447041451	574470	4145180	0.000506246	3.95745E-07	0.000507
7448041451	574480	4145180	0.000472181	5.13143E-07	0.000473
7449041451	574490	4145180	0.000530929	5.01395E-07	0.000531
7450041451	574500	4145180	0.000644282	5.28234E-07	0.000645
7451041451	574510	4145180	0.000774796	5.78549E-07	0.000775
7452041451	574520	4145180	0.000923483	5.8641E-07	0.000924
7453041451	574530	4145180	0.001069042	5.69383E-07	0.00107
7445041451	574450	4145190	0.00121046	5.73837E-07	0.001211
7446041451	574460	4145190	0.001337338	5.77187E-07	0.001338
7447041451	574470	4145190	0.001469458	5.8578E-07	0.00147
7448041451	574480	4145190	0.001546971	5.74522E-07	0.001548
7449041451	574490	4145190	0.00152026	5.56428E-07	0.001521
7450041451	574500	4145190	0.001401411	5.58266E-07	0.001402
7451041451	574510	4145190	0.001273941	5.41472E-07	0.001274
7452041451	574520	4145190	0.001150782	4.88385E-07	0.001151
7444041452	574440	4145200	0.000987979	4.63164E-07	0.000988
7445041452	574450	4145200	0.000830754	4.53006E-07	0.000831
7446041452	574460	4145200	0.000698043	4.42247E-07	0.000698
7447041452	574470	4145200	0.000591283	4.25619E-07	0.000592
7448041452	574480	4145200	0.0004912	5.40918E-07	0.000492
7449041452	574490	4145200	0.000568122	5.56058E-07	0.000569
7450041452	574500	4145200	0.000686801	5.81563E-07	0.000687
7451041452	574510	4145200	0.000851633	6.17532E-07	0.000852
7443041452	574430	4145210	0.001070395	6.85972E-07	0.001071
7444041452	574440	4145210	0.001336831	6.96532E-07	0.001338
7445041452	574450	4145210	0.001547394	6.56811E-07	0.001548
7446041452	574460	4145210	0.001870296	6.73371E-07	0.001871
7447041452	574470	4145210	0.002130308	6.8258E-07	0.002131
7448041452	574480	4145210	0.002281193	6.82745E-07	0.002282
7449041452	574490	4145210	0.002291928	6.57553E-07	0.002293
7450041452	574500	4145210	0.002084577	6.48835E-07	0.002085
7451041452	574510	4145210	0.001792444	6.32665E-07	0.001793
7443041452	574430	4145220	0.001543252	5.63573E-07	0.001544
7444041452	574440	4145220	0.001253739	5.31586E-07	0.001254
7445041452	574450	4145220	0.001014267	5.02673E-07	0.001015
7446041452	574460	4145220	0.000822808	4.83564E-07	0.000823
7447041452	574470	4145220	0.000677925	4.59687E-07	0.000678
7448041452	574480	4145220	0.000515544	6.54933E-07	0.000516
7449041452	574490	4145220	0.000602356	6.19662E-07	0.000603
7450041452	574500	4145220	0.000741322	6.60307E-07	0.000742
7451041452	574510	4145220	0.000944953	7.81021E-07	0.000946
7452041452	574520	4145220	0.001208262	7.88105E-07	0.001209
7453041452	574530	4145220	0.001508679	7.3826E-07	0.001509
7444041452	574440	4145230	0.002017377	7.6855E-07	0.002018
7445041452	574450	4145230	0.002747963	8.11738E-07	0.002749

Max GLC for Chronic Calcs

Max GLC: 0.002107

XY	X	Y	2025	2026	2027	2034	2035
57449041451	574490	4145130	5.886E-05	0	0		
57448041451	574480	4145140	6.651E-05	0	0		
57449041451	574490	4145140	7.85E-05	0	0		
57449041451	574490	4145150	9.101E-05	0	0		
57450041451	574500	4145150	0.0001069	0	0		
57446041451	574460	4145160	0.0001183	0	0		
57449041451	574490	4145160	0.0001263	0	0		
57450041451	574500	4145160	0.0001338	0	0		
57451041451	574510	4145160	0.0001433	0	0		
57446041451	574460	4145170	0.0001484	0	0		
57447041451	574470	4145170	0.0001447	0	0		
57448041451	574480	4145170	0.000135	0	0		
57449041451	574490	4145170	0.0001287	0	0		
57450041451	574500	4145170	0.0001197	0	0		
57451041451	574510	4145170	0.0001058	0	0		
57452041451	574520	4145170	9.266E-05	0	0		
57446041451	574460	4145180	7.826E-05	0	0		
57447041451	574470	4145180	6.796E-05	0	0		
57448041451	574480	4145180	6.34E-05	0	0		
57449041451	574490	4145180	7.128E-05	0	0		
57450041451	574500	4145180	8.649E-05	0	0		
57451041451	574510	4145180	0.000104	0	0		
57452041451	574520	4145180	0.000124	0	0		
57453041451	574530	4145180	0.0001435	0	0		
57445041451	574450	4145190	0.0001624	0	0		
57446041451	574460	4145190	0.0001795	0	0		
57447041451	574470	4145190	0.0001972	0	0		
57448041451	574480	4145190	0.0002076	0	0		
57449041451	574490	4145190	0.000204	0	0		
57450041451	574500	4145190	0.0001881	0	0		
57451041451	574510	4145190	0.000171	0	0		
57452041451	574520	4145190	0.0001544	0	0		
57444041452	574440	4145200	0.0001326	0	0		
57445041452	574450	4145200	0.0001115	0	0		
57446041452	574460	4145200	9.369E-05	0	0		
57447041452	574470	4145200	7.937E-05	0	0		
57448041452	574480	4145200	6.595E-05	0	0		
57449041452	574490	4145200	7.627E-05	0	0		
57450041452	574500	4145200	9.22E-05	0	0		
57451041452	574510	4145200	0.0001143	0	0		
57443041452	574430	4145210	0.0001437	0	0		
57444041452	574440	4145210	0.0001794	0	0		
57445041452	574450	4145210	0.0002077	0	0		
57446041452	574460	4145210	0.000251	0	0		
57447041452	574470	4145210	0.0002859	0	0		
57448041452	574480	4145210	0.0003061	0	0		
57449041452	574490	4145210	0.0003075	0	0		
57450041452	574500	4145210	0.0002797	0	0		
57451041452	574510	4145210	0.0002405	0	0		
57443041452	574430	4145220	0.0002071	0	0		
57444041452	574440	4145220	0.0001682	0	0		
57445041452	574450	4145220	0.0001361	0	0		
57446041452	574460	4145220	0.0001104	0	0		
57447041452	574470	4145220	9.099E-05	0	0		
57448041452	574480	4145220	6.923E-05	0	0		
57449041452	574490	4145220	8.087E-05	0	0		
57450041452	574500	4145220	9.952E-05	0	0		
57451041452	574510	4145220	0.0001269	0	0		
57452041452	574520	4145220	0.0001622	0	0		
57453041452	574530	4145220	0.0002025	0	0		
57444041452	574440	4145230	0.0002707	0	0		
57445041452	574450	4145230	0.0003687	0	0		

Garvey Reservoir Rehab - Mitigated Surge Tank Telemetry

Cancer Risk Summary & Maximum Annual GLC for Chronic Calculations

Cancer Risk Summary

Max Risk: 0.015704

XY	X	Y	Offroad Risk	Haul Risk	Total Risk
7446041452:	574460	4145230	0.003536284	8.20574E-07	0.003537
7447041452:	574470	4145230	0.003898069	8.18104E-07	0.003899
7448041452:	574480	4145230	0.003872288	8.00008E-07	0.003873
7449041452:	574490	4145230	0.003537721	7.33645E-07	0.003538
7450041452:	574500	4145230	0.002713053	7.46272E-07	0.002714
7451041452:	574510	4145230	0.002158287	6.41834E-07	0.002159
7452041452:	574520	4145230	0.001612988	6.15798E-07	0.001614
7444041452	574440	4145240	0.001229479	5.7992E-07	0.00123
7445041452	574450	4145240	0.000960253	5.41348E-07	0.000961
7446041452	574460	4145240	0.000763638	5.15171E-07	0.000764
7447041452	574470	4145240	0.000529323	7.35039E-07	0.00053
7448041452	574480	4145240	0.000642085	8.35004E-07	0.000643
7449041452	574490	4145240	0.000785446	8.12668E-07	0.000786
7450041452	574500	4145240	0.001000151	8.57962E-07	0.001001
7451041452	574510	4145240	0.001281042	8.12308E-07	0.001282
7445041452	574450	4145250	0.001740712	8.54301E-07	0.001742
7446041452	574460	4145250	0.002587611	9.36394E-07	0.002589
7447041452	574470	4145250	0.004042614	9.99992E-07	0.004044
7448041452	574480	4145250	0.006195407	9.87732E-07	0.006196
7446041452	574460	4145260	0.008041865	9.89087E-07	0.008043
7447041452	574470	4145260	0.008133157	9.90438E-07	0.008134
7448041452	574480	4145260	0.006675449	9.21501E-07	0.006676
7447041452	574470	4145270	0.004410993	9.03632E-07	0.004412
7449041451	574490	4145130	0.003027755	7.79807E-07	0.003029
7448041451	574480	4145140	0.00206708	7.19333E-07	0.002068
7449041451	574490	4145140	0.001468274	6.84574E-07	0.001469
7449041451	574490	4145150	0.001105982	6.11232E-07	0.001107
7450041451	574500	4145150	0.000859579	5.57257E-07	0.00086
7446041451	574460	4145160	0.00053524	8.12351E-07	0.000536
7449041451	574490	4145160	0.000653073	9.3828E-07	0.000654
7450041451	574500	4145160	0.000812411	9.91838E-07	0.000813
7451041451	574510	4145160	0.001027623	9.41153E-07	0.001029
7446041451	574460	4145170	0.001348412	9.31497E-07	0.001349
7447041451	574470	4145170	0.004000096	1.09211E-06	0.004001
7448041451	574480	4145170	0.002562506	8.60192E-07	0.002563
7449041451	574490	4145170	0.001741219	7.2512E-07	0.001742
7450041451	574500	4145170	0.001257035	6.41853E-07	0.001258
7451041451	574510	4145170	0.000939459	6.42917E-07	0.00094
7452041451	574520	4145170	0.000528477	8.5148E-07	0.000529
7446041451	574460	4145180	0.00064834	9.83972E-07	0.000649
7447041451	574470	4145180	0.0008081	1.06427E-06	0.000809
7448041451	574480	4145180	0.001021114	1.02255E-06	0.001022
7449041451	574490	4145180	0.005438531	1.288E-06	0.00544
7450041451	574500	4145180	0.003108988	1.04014E-06	0.00311
7451041451	574510	4145180	0.002003683	8.63358E-07	0.002005
7452041451	574520	4145180	0.001373855	8.69679E-07	0.001375
7453041451	574530	4145180	0.000995079	7.95304E-07	0.000996
7445041451	574450	4145190	0.000532788	1.14787E-06	0.000534
7446041451	574460	4145190	0.000634223	1.08787E-06	0.000635
7447041451	574470	4145190	0.000787221	1.18053E-06	0.000788
7448041451	574480	4145190	0.001011478	1.27796E-06	0.001013
7449041451	574490	4145190	0.006705541	2.23516E-06	0.006708
7450041451	574500	4145190	0.003591481	1.76636E-06	0.003593
7451041451	574510	4145190	0.002242225	1.3252E-06	0.002244
7452041451	574520	4145190	0.001541138	1.03471E-06	0.001542
7444041452	574440	4145200	0.0011026	8.96853E-07	0.001103
7445041452	574450	4145200	0.000522645	1.38439E-06	0.000524
7446041452	574460	4145200	0.000623995	1.42986E-06	0.000625
7447041452	574470	4145200	0.000769724	1.55657E-06	0.000771
7448041452	574480	4145200	0.000966931	1.53269E-06	0.000968
7449041452	574490	4145200	0.006870881	4.88824E-06	0.006876
7450041452	574500	4145200	0.003893589	2.56424E-06	0.003896

Max GLC for Chronic Calcs

Max GLC: 0.002107

XY	X	Y	2025	2026	2027	2034	2035
57446041452:	574460	4145230	0.0004745	0	0		
57447041452:	574470	4145230	0.000523	0	0		
57448041452:	574480	4145230	0.0005196	0	0		
57449041452:	574490	4145230	0.0004747	0	0		
57450041452:	574500	4145230	0.000364	0	0		
57451041452:	574510	4145230	0.0002896	0	0		
57452041452:	574520	4145230	0.0002165	0	0		
57444041452	574440	4145240	0.000165	0	0		
57445041452	574450	4145240	0.0001289	0	0		
57446041452	574460	4145240	0.0001025	0	0		
57447041452	574470	4145240	7.109E-05	0	0		
57448041452	574480	4145240	8.623E-05	0	0		
57449041452	574490	4145240	0.0001055	0	0		
57450041452	574500	4145240	0.0001343	0	0		
57451041452	574510	4145240	0.0001719	0	0		
57445041452	574450	4145250	0.0002336	0	0		
57446041452	574460	4145250	0.0003472	0	0		
57447041452	574470	4145250	0.0005424	0	0		
57448041452	574480	4145250	0.0008312	0	0		
57446041452	574460	4145260	0.0010789	0	0		
57447041452	574470	4145260	0.0010912	0	0		
57448041452	574480	4145260	0.0008956	0	0		
57447041452	574470	4145270	0.0005918	0	0		
57449041451	574490	4145130	0.0004063	0	0		
57448041451	574480	4145140	0.0002774	0	0		
57449041451	574490	4145140	0.000197	0	0		
57449041451	574490	4145150	0.0001484	0	0		
57450041451	574500	4145150	0.0001154	0	0		
57446041451	574460	4145160	7.189E-05	0	0		
57449041451	574490	4145160	8.771E-05	0	0		
57450041451	574500	4145160	0.0001091	0	0		
57451041451	574510	4145160	0.000138	0	0		
57446041451	574460	4145170	0.000181	0	0		
57447041451	574470	4145170	0.0005367	0	0		
57448041451	574480	4145170	0.0003439	0	0		
57449041451	574490	4145170	0.0002337	0	0		
57450041451	574500	4145170	0.0001687	0	0		
57451041451	574510	4145170	0.0001261	0	0		
57452041451	574520	4145170	7.099E-05	0	0		
57446041451	574460	4145180	8.708E-05	0	0		
57447041451	574470	4145180	0.0001085	0	0		
57448041451	574480	4145180	0.0001371	0	0		
57449041451	574490	4145180	0.0007297	0	0		
57450041451	574500	4145180	0.0004172	0	0		
57451041451	574510	4145180	0.0002689	0	0		
57452041451	574520	4145180	0.0001844	0	0		
57453041451	574530	4145180	0.0001336	0	0		
57445041451	574450	4145190	7.16E-05	0	0		
57446041451	574460	4145190	8.52E-05	0	0		
57447041451	574470	4145190	0.0001057	0	0		
57448041451	574480	4145190	0.0001358	0	0		
57449041451	574490	4145190	0.0008998	0	0		
57450041451	574500	4145190	0.000482	0	0		
57451041451	574510	4145190	0.0003009	0	0		
57452041451	574520	4145190	0.0002069	0	0		
57444041452	574440	4145200	0.000148	0	0		
57445041452	574450	4145200	7.026E-05	0	0		
57446041452	574460	4145200	8.386E-05	0	0		
57447041452	574470	4145200	0.0001034	0	0		
57448041452	574480	4145200	0.0001299	0	0		
57449041452	574490	4145200	0.0009223	0	0		
57450041452	574500	4145200	0.0005226	0	0		

Garvey Reservoir Rehab - Mitigated Surge Tank Telemetry

Cancer Risk Summary & Maximum Annual GLC for Chronic Calculations

Cancer Risk Summary

Max Risk: 0.015704

XY	X	Y	Offroad Risk	Haul Risk	Total Risk
7451041452(	574510	4145200	0.002437994	1.74988E-06	0.00244
7443041452:	574430	4145210	0.001689234	1.2904E-06	0.001691
7444041452:	574440	4145210	0.001188736	1.05882E-06	0.00119
7445041452:	574450	4145210	0.000506331	1.64649E-06	0.000508
7446041452:	574460	4145210	0.000592889	1.62027E-06	0.000595
7447041452:	574470	4145210	0.000724501	1.81884E-06	0.000726
7448041452:	574480	4145210	0.000901336	1.88217E-06	0.000903
7449041452:	574490	4145210	0.00958275	3.88506E-05	0.009622
7450041452:	574500	4145210	0.005956527	7.62638E-06	0.005964
7451041452:	574510	4145210	0.003853269	3.48168E-06	0.003857
7443041452:	574430	4145220	0.002512042	2.18157E-06	0.002514
7444041452:	574440	4145220	0.001743586	1.56274E-06	0.001745
7445041452:	574450	4145220	0.001293468	1.20307E-06	0.001295
7446041452:	574460	4145220	0.000482831	1.94041E-06	0.000485
7447041452:	574470	4145220	0.000561613	2.02047E-06	0.000564
7448041452:	574480	4145220	0.000674713	2.25584E-06	0.000677
7449041452:	574490	4145220	0.000827119	2.43379E-06	0.00083
7450041452:	574500	4145220	0.00772936	6.09908E-05	0.00779
7451041452:	574510	4145220	0.006466577	2.74318E-05	0.006494
7452041452:	574520	4145220	0.004801941	8.8516E-06	0.004811
7453041452:	574530	4145220	0.003481678	4.24947E-06	0.003486
7444041452:	574440	4145230	0.002493361	2.57578E-06	0.002496
7445041452:	574450	4145230	0.001801404	1.81081E-06	0.001803
7446041452:	574460	4145230	0.001375884	1.30258E-06	0.001377
7447041452:	574470	4145230	0.000454852	2.38062E-06	0.000457
7448041452:	574480	4145230	0.0005289	2.56557E-06	0.000531
7449041452:	574490	4145230	0.000628475	2.8437E-06	0.000631
7450041452:	574500	4145230	0.000747662	3.18429E-06	0.000751
7451041452:	574510	4145230	0.004311248	1.13357E-05	0.004323
7452041452:	574520	4145230	0.004883005	6.1909E-05	0.004945
7444041452(	574440	4145240	0.004543958	2.50822E-05	0.004569
7445041452(	574450	4145240	0.003761639	8.15733E-06	0.00377
7446041452(	574460	4145240	0.002867995	4.87605E-06	0.002873
7447041452(	574470	4145240	0.002192352	3.02573E-06	0.002195
7448041452(	574480	4145240	0.001740374	1.91425E-06	0.001742
7449041452(	574490	4145240	0.001335986	1.49228E-06	0.001337
7450041452(	574500	4145240	0.000417321	3.02923E-06	0.00042
7451041452(	574510	4145240	0.000491622	3.41468E-06	0.000495
7445041452!	574450	4145250	0.000575053	3.68401E-06	0.000579
7446041452!	574460	4145250	0.000674713	4.42377E-06	0.000679
7447041452!	574470	4145250	0.000824076	4.33245E-06	0.000828
7448041452!	574480	4145250	0.001604874	5.54424E-06	0.00161
7446041452(	574460	4145260	0.002015094	6.43761E-06	0.002022
7447041452(	574470	4145260	0.002474342	7.95621E-06	0.002482
7448041452(	574480	4145260	0.0029685	1.36222E-05	0.002982
7447041452:	574470	4145270	0.003240938	6.00563E-05	0.003301
7449041451:	574490	4145130	0.003224962	2.51551E-05	0.00325
7448041451(	574480	4145140	0.002868249	8.06025E-06	0.002876
7449041451(	574490	4145140	0.002378908	4.82488E-06	0.002384
7449041451!	574490	4145150	0.001916195	3.20763E-06	0.001919
7450041451!	574500	4145150	0.001524993	2.28266E-06	0.001527
7446041451(	574460	4145160	0.001235649	1.66666E-06	0.001237
7449041451(	574490	4145160	0.000387313	5.3216E-06	0.000393
7450041451(	574500	4145160	0.000445723	6.07562E-06	0.000452
7451041451(	574510	4145160	0.000523236	5.89949E-06	0.000529
7446041451:	574460	4145170	0.000606244	7.24271E-06	0.000613
7447041451:	574470	4145170	0.000724585	7.32173E-06	0.000732
7448041451:	574480	4145170	0.000871159	7.47515E-06	0.000879
7449041451:	574490	4145170	0.00105053	7.75722E-06	0.001058
7450041451:	574500	4145170	0.001275294	8.61503E-06	0.001284
7451041451:	574510	4145170	0.00154004	9.43008E-06	0.001549
7452041451:	574520	4145170	0.001844176	1.09388E-05	0.001855

Max GLC for Chronic Calcs

Max GLC: 0.002107

XY	X	Y	2025	2026	2027	2034	2035
574510414520	574510	4145200	0.0003273	0	0		
574430414522	574430	4145210	0.0002268	0	0		
574440414522	574440	4145210	0.0001596	0	0		
574450414522	574450	4145210	6.81E-05	0	0		
574460414522	574460	4145210	7.971E-05	0	0		
574470414522	574470	4145210	9.739E-05	0	0		
574480414522	574480	4145210	0.0001211	0	0		
574490414522	574490	4145210	0.0012897	0	0		
574500414522	574500	4145210	0.0007999	0	0		
574510414522	574510	4145210	0.0005173	0	0		
574430414522	574430	4145220	0.0003372	0	0		
574440414522	574440	4145220	0.0002341	0	0		
574450414522	574450	4145220	0.0001737	0	0		
574460414522	574460	4145220	6.498E-05	0	0		
574470414522	574470	4145220	7.556E-05	0	0		
574480414522	574480	4145220	9.076E-05	0	0		
574490414522	574490	4145220	0.0001112	0	0		
574500414522	574500	4145220	0.0010435	0	0		
574510414522	574510	4145220	0.0008705	0	0		
574520414522	574520	4145220	0.0006451	0	0		
574530414522	574530	4145220	0.0004675	0	0		
574440414523	574440	4145230	0.0003348	0	0		
574450414523	574450	4145230	0.0002419	0	0		
574460414523	574460	4145230	0.0001847	0	0		
574470414523	574470	4145230	6.128E-05	0	0		
574480414523	574480	4145230	7.123E-05	0	0		
574490414523	574490	4145230	8.462E-05	0	0		
574500414523	574500	4145230	0.0001006	0	0		
574510414523	574510	4145230	0.0005796	0	0		
574520414523	574520	4145230	0.0006618	0	0		
574440414524	574440	4145240	0.0006123	0	0		
574450414524	574450	4145240	0.0005055	0	0		
574460414524	574460	4145240	0.0003853	0	0		
574470414524	574470	4145240	0.0002944	0	0		
574480414524	574480	4145240	0.0002337	0	0		
574490414524	574490	4145240	0.0001794	0	0		
574500414524	574500	4145240	5.631E-05	0	0		
574510414524	574510	4145240	6.632E-05	0	0		
574450414525	574450	4145250	7.754E-05	0	0		
574460414525	574460	4145250	9.099E-05	0	0		
574470414525	574470	4145250	0.000111	0	0		
574480414525	574480	4145250	0.0002159	0	0		
574460414526	574460	4145260	0.000271	0	0		
574470414526	574470	4145260	0.0003328	0	0		
574480414526	574480	4145260	0.0003997	0	0		
574470414527	574470	4145270	0.0004413	0	0		
574490414513	574490	4145130	0.0004354	0	0		
574480414514	574480	4145140	0.0003857	0	0		
574490414514	574490	4145140	0.0003197	0	0		
574490414515	574490	4145150	0.0002574	0	0		
574500414515	574500	4145150	0.0002048	0	0		
574460414516	574460	4145160	0.0001659	0	0		
574490414516	574490	4145160	5.253E-05	0	0		
574500414516	574500	4145160	6.045E-05	0	0		
574510414516	574510	4145160	7.083E-05	0	0		
574460414517	574460	4145170	8.211E-05	0	0		
574470414517	574470	4145170	9.8E-05	0	0		
574480414517	574480	4145170	0.0001177	0	0		
574490414517	574490	4145170	0.0001418	0	0		
574500414517	574500	4145170	0.000172	0	0		
574510414517	574510	4145170	0.0002076	0	0		
574520414517	574520	4145170	0.0002486	0	0		

Garvey Reservoir Rehab - Mitigated Surge Tank Telemetry

Cancer Risk Summary & Maximum Annual GLC for Chronic Calculations

Cancer Risk Summary

Max Risk: 0.015704

XY	X	Y	Offroad Risk	Haul Risk	Total Risk
7446041451	574460	4145180	0.002123799	1.71687E-05	0.002141
7447041451	574470	4145180	0.002369018	2.28307E-05	0.002392
7448041451	574480	4145180	0.002201989	9.19858E-06	0.002211
7449041451	574490	4145180	0.001930311	5.01627E-06	0.001935
7450041451	574500	4145180	0.001632937	3.28658E-06	0.001636
7451041451	574510	4145180	0.001347989	2.42413E-06	0.00135
7452041451	574520	4145180	0.00112517	1.78001E-06	0.001127
7453041451	574530	4145180	0.000363138	1.54524E-05	0.000379
7445041451	574450	4145190	0.00041039	1.92007E-05	0.00043
7446041451	574460	4145190	0.000477168	1.40763E-05	0.000491
7447041451	574470	4145190	0.000549102	1.83938E-05	0.000567
7448041451	574480	4145190	0.000634815	1.96973E-05	0.000655
7449041451	574490	4145190	0.000746225	1.96904E-05	0.000766
7450041451	574500	4145190	0.000881725	2.03686E-05	0.000902
7451041451	574510	4145190	0.001039711	2.11767E-05	0.001061
7452041451	574520	4145190	0.001219082	2.1699E-05	0.001241
7444041452	574440	4145200	0.001418486	2.33766E-05	0.001442
7445041452	574450	4145200	0.001599802	2.81512E-05	0.001628
7446041452	574460	4145200	0.001753307	8.97886E-05	0.001843
7447041452	574470	4145200	0.001787119	3.11976E-05	0.001818
7448041452	574480	4145200	0.001699124	1.09729E-05	0.00171
7449041452	574490	4145200	0.001538603	5.88504E-06	0.001544
7450041452	574500	4145200	0.001351624	3.70121E-06	0.001355
7451041452	574510	4145200	0.001165406	2.53389E-06	0.001168
7443041452	574430	4145210	0.001002771	1.84451E-06	0.001005
7444041452	574440	4145210	0.000335666	6.2213E-05	0.000398
7445041452	574450	4145210	0.000380635	8.01236E-05	0.000461
7446041452	574460	4145210	0.000428817	7.8457E-05	0.000507
7447041452	574470	4145210	0.000498047	8.64264E-05	0.000584
7448041452	574480	4145210	0.000568544	8.15121E-05	0.00065
7449041452	574490	4145210	0.000650115	8.85581E-05	0.000739
7450041452	574500	4145210	0.000752226	8.57108E-05	0.000838
7451041452	574510	4145210	0.000883416	8.32593E-05	0.000967
7443041452	574430	4145220	0.001009956	8.00607E-05	0.00109
7444041452	574440	4145220	0.001134891	8.09394E-05	0.001216
7445041452	574450	4145220	0.001259825	8.31892E-05	0.001343
7446041452	574460	4145220	0.001364388	8.7397E-05	0.001452
7447041452	574470	4145220	0.001393466	4.29723E-05	0.001436
7448041452	574480	4145220	0.001357794	1.15002E-05	0.001369
7449041452	574490	4145220	0.001265235	5.88054E-06	0.001271
7450041452	574500	4145220	0.001133623	3.64764E-06	0.001137
7451041452	574510	4145220	0.001003363	2.52141E-06	0.001006
7452041452	574520	4145220	0.000886712	1.86615E-06	0.000889
7453041452	574530	4145220	0.000891869	8.38704E-07	0.000893
7444041452	574440	4145230	0.001009111	8.58742E-07	0.00101
7445041452	574450	4145230	0.00113058	8.00413E-07	0.001131
7446041452	574460	4145230	0.001301582	8.23552E-07	0.001302
7447041452	574470	4145230	0.001456017	7.90952E-07	0.001457
7448041452	574480	4145230	0.001696334	8.09377E-07	0.001697
7449041452	574490	4145230	0.002065389	8.45877E-07	0.002066
7450041452	574500	4145230	0.002420666	8.52987E-07	0.002422
7451041452	574510	4145230	0.002961907	9.01054E-07	0.002963
7452041452	574520	4145230	0.003644904	9.27297E-07	0.003646
7444041452	574440	4145240	0.00434861	9.24736E-07	0.00435
7445041452	574450	4145240	0.005062714	9.18596E-07	0.005064
7446041452	574460	4145240	0.00564267	9.14728E-07	0.005644
7447041452	574470	4145240	0.00595695	9.19398E-07	0.005958
7448041452	574480	4145240	0.006017135	9.20521E-07	0.006018
7449041452	574490	4145240	0.005857797	9.08417E-07	0.005859
7450041452	574500	4145240	0.005452817	8.8914E-07	0.005454
7451041452	574510	4145240	0.004998387	8.38565E-07	0.004999
7445041452	574450	4145250	0.004225113	8.38901E-07	0.004226

Max GLC for Chronic Calcs

Max GLC: 0.002107

XY	X	Y	2025	2026	2027	2034	2035
574460414518	574460	4145180	0.0002868	0	0		
574470414518	574470	4145180	0.0003203	0	0		
574480414518	574480	4145180	0.0002964	0	0		
574490414518	574490	4145180	0.0002595	0	0		
574500414518	574500	4145180	0.0002194	0	0		
574510414518	574510	4145180	0.0001811	0	0		
574520414518	574520	4145180	0.0001511	0	0		
574530414518	574530	4145180	5.039E-05	0	0		
574450414519	574450	4145190	5.713E-05	0	0		
574460414519	574460	4145190	6.554E-05	0	0		
574470414519	574470	4145190	7.565E-05	0	0		
574480414519	574480	4145190	8.729E-05	0	0		
574490414519	574490	4145190	0.0001022	0	0		
574500414519	574500	4145190	0.0001205	0	0		
574510414519	574510	4145190	0.0001418	0	0		
574520414519	574520	4145190	0.0001659	0	0		
574440414520	574440	4145200	0.0001928	0	0		
574450414520	574450	4145200	0.0002177	0	0		
574460414520	574460	4145200	0.0002449	0	0		
574470414520	574470	4145200	0.0002431	0	0		
574480414520	574480	4145200	0.0002291	0	0		
574490414520	574490	4145200	0.000207	0	0		
574500414520	574500	4145200	0.0001817	0	0		
574510414520	574510	4145200	0.0001566	0	0		
574430414521	574430	4145210	0.0001347	0	0		
574440414521	574440	4145210	5.176E-05	0	0		
574450414521	574450	4145210	5.973E-05	0	0		
574460414521	574460	4145210	6.602E-05	0	0		
574470414521	574470	4145210	7.617E-05	0	0		
574480414521	574480	4145210	8.509E-05	0	0		
574490414521	574490	4145210	9.68E-05	0	0		
574500414521	574500	4145210	0.0001102	0	0		
574510414521	574510	4145210	0.0001275	0	0		
574430414522	574430	4145220	0.0001442	0	0		
574440414522	574440	4145220	0.000161	0	0		
574450414522	574450	4145220	0.000178	0	0		
574460414522	574460	4145220	0.0001925	0	0		
574470414522	574470	4145220	0.0001916	0	0		
574480414522	574480	4145220	0.0001834	0	0		
574490414522	574490	4145220	0.0001704	0	0		
574500414522	574500	4145220	0.0001525	0	0		
574510414522	574510	4145220	0.0001349	0	0		
574520414522	574520	4145220	0.0001192	0	0		
574530414522	574530	4145220	0.0001197	0	0		
574440414523	574440	4145230	0.0001355	0	0		
574450414523	574450	4145230	0.0001518	0	0		
574460414523	574460	4145230	0.0001747	0	0		
574470414523	574470	4145230	0.0001954	0	0		
574480414523	574480	4145230	0.0002277	0	0		
574490414523	574490	4145230	0.0002772	0	0		
574500414523	574500	4145230	0.0003248	0	0		
574510414523	574510	4145230	0.0003974	0	0		
574520414523	574520	4145230	0.0004891	0	0		
574440414524	574440	4145240	0.0005835	0	0		
574450414524	574450	4145240	0.0006793	0	0		
574460414524	574460	4145240	0.0007571	0	0		
574470414524	574470	4145240	0.0007992	0	0		
574480414524	574480	4145240	0.0008073	0	0		
574490414524	574490	4145240	0.0007859	0	0		
574500414524	574500	4145240	0.0007316	0	0		
574510414524	574510	4145240	0.0006706	0	0		
574450414525	574450	4145250	0.0005669	0	0		

Garvey Reservoir Rehab - Mitigated Surge Tank Telemetry

Cancer Risk Summary & Maximum Annual GLC for Chronic Calculations

Cancer Risk Summary

Max Risk: 0.015704

XY	X	Y	Offroad Risk	Haul Risk	Total Risk
7446041452	574460	4145250	0.003512193	8.36121E-07	0.003513
7447041452	574470	4145250	0.002945424	8.13661E-07	0.002946
7448041452	574480	4145250	0.002576961	7.18871E-07	0.002578
7446041452	574460	4145260	0.002164458	6.94935E-07	0.002165
7447041452	574470	4145260	0.000912748	8.95929E-07	0.000914
7448041452	574480	4145260	0.001026439	8.63144E-07	0.001027
7447041452	574470	4145270	0.001156699	8.17477E-07	0.001158
7449041451	574490	4145130	0.001316713	8.27371E-07	0.001318
7448041451	574480	4145140	0.001533615	8.49154E-07	0.001534
7449041451	574490	4145140	0.00182634	8.74651E-07	0.001827
7449041451	574490	4145150	0.002257355	9.4346E-07	0.002258
7450041451	574500	4145150	0.002748809	9.66401E-07	0.00275
7446041451	574460	4145160	0.003459024	1.0097E-06	0.00346
7449041451	574490	4145160	0.004370419	1.02412E-06	0.004371
7450041451	574500	4145160	0.005478936	1.02366E-06	0.00548
7451041451	574510	4145160	0.006870373	1.01106E-06	0.006871
7446041451	574460	4145170	0.008159868	1.00541E-06	0.008161
7447041451	574470	4145170	0.009014797	1.01483E-06	0.009016
7448041451	574480	4145170	0.009294843	1.02217E-06	0.009296
7449041451	574490	4145170	0.00893982	1.01757E-06	0.008941
7450041451	574500	4145170	0.008003573	1.00483E-06	0.008005
7451041451	574510	4145170	0.007020836	9.4921E-07	0.007022
7452041451	574520	4145170	0.005719845	9.26148E-07	0.005721
7446041451	574460	4145180	0.004484111	9.29105E-07	0.004485
7447041451	574470	4145180	0.00357728	9.10083E-07	0.003578
7448041451	574480	4145180	0.003036631	7.9306E-07	0.003037
7449041451	574490	4145180	0.002476878	7.69183E-07	0.002478
7450041451	574500	4145180	0.000928216	9.56532E-07	0.000929
7451041451	574510	4145180	0.001052728	9.50446E-07	0.001054
7452041451	574520	4145180	0.001174366	8.61956E-07	0.001175
7453041451	574530	4145180	0.001359485	8.86706E-07	0.00136
7445041451	574450	4145190	0.001599633	9.13421E-07	0.001601
7446041451	574460	4145190	0.0019872	1.01882E-06	0.001988
7447041451	574470	4145190	0.002448899	1.0673E-06	0.00245
7448041451	574480	4145190	0.003062243	1.09527E-06	0.003063
7449041451	574490	4145190	0.003928415	1.12257E-06	0.00393
7450041451	574500	4145190	0.005155696	1.13575E-06	0.005157
7451041451	574510	4145190	0.006850002	1.13918E-06	0.006851
7452041451	574520	4145190	0.009361959	1.12744E-06	0.009363
7444041452	574440	4145200	0.012437051	1.11844E-06	0.012438
7445041452	574450	4145200	0.014533209	1.14258E-06	0.014534
7446041452	574460	4145200	0.015702672	1.16358E-06	0.015704
7447041452	574470	4145200	0.015320769	1.1482E-06	0.015322
7448041452	574480	4145200	0.013384456	1.10389E-06	0.013386
7449041452	574490	4145200	0.010642747	1.04571E-06	0.010644
7450041452	574500	4145200	0.008021155	9.96947E-07	0.008022
7451041452	574510	4145200	0.005808432	1.0371E-06	0.005809
7443041452	574430	4145210	0.003418365	9.7758E-07	0.003419
7444041452	574440	4145210	0.002817446	8.35501E-07	0.002818
7445041452	574450	4145210	0.000936247	1.01146E-06	0.000937
7446041452	574460	4145210	0.001039541	8.9924E-07	0.00104
7447041452	574470	4145210	0.001193385	9.22873E-07	0.001194
7448041452	574480	4145210	0.001404032	9.64669E-07	0.001405
7449041452	574490	4145210	0.004042614	1.06061E-06	0.004044
7450041452	574500	4145210	0.003173822	9.21666E-07	0.003175
7451041452	574510	4145210	0.000938529	1.07376E-06	0.00094
7443041452	574430	4145220	0.001044529	9.65153E-07	0.001045
7444041452	574440	4145220	0.001207417	9.99724E-07	0.001208
7445041452	574450	4145220	0.004669484	1.12693E-06	0.004671
7446041452	574460	4145220	0.003544314	1.03017E-06	0.003545
7447041452	574470	4145220	0.000920693	1.05343E-06	0.000922
7448041452	574480	4145220	0.001045036	1.04887E-06	0.001046

Max GLC for Chronic Calcs

Max GLC: 0.002107

XY	X	Y	2025	2026	2027	2034	2035
57446041452	574460	4145250	0.0004713	0	0		
57447041452	574470	4145250	0.0003952	0	0		
57448041452	574480	4145250	0.0003458	0	0		
57446041452	574460	4145260	0.0002904	0	0		
57447041452	574470	4145260	0.0001225	0	0		
57448041452	574480	4145260	0.0001378	0	0		
57447041452	574470	4145270	0.0001553	0	0		
57449041451	574490	4145130	0.0001767	0	0		
57448041451	574480	4145140	0.0002058	0	0		
57449041451	574490	4145140	0.0002451	0	0		
57449041451	574490	4145150	0.0003029	0	0		
57450041451	574500	4145150	0.0003689	0	0		
57446041451	574460	4145160	0.0004641	0	0		
57449041451	574490	4145160	0.0005864	0	0		
57450041451	574500	4145160	0.0007351	0	0		
57451041451	574510	4145160	0.0009218	0	0		
57446041451	574460	4145170	0.0010948	0	0		
57447041451	574470	4145170	0.0012095	0	0		
57448041451	574480	4145170	0.001247	0	0		
57449041451	574490	4145170	0.0011994	0	0		
57450041451	574500	4145170	0.0010738	0	0		
57451041451	574510	4145170	0.000942	0	0		
57452041451	574520	4145170	0.0007674	0	0		
57446041451	574460	4145180	0.0006017	0	0		
57447041451	574470	4145180	0.00048	0	0		
57448041451	574480	4145180	0.0004075	0	0		
57449041451	574490	4145180	0.0003324	0	0		
57450041451	574500	4145180	0.0001246	0	0		
57451041451	574510	4145180	0.0001413	0	0		
57452041451	574520	4145180	0.0001576	0	0		
57453041451	574530	4145180	0.0001825	0	0		
57445041451	574450	4145190	0.0002147	0	0		
57446041451	574460	4145190	0.0002667	0	0		
57447041451	574470	4145190	0.0003286	0	0		
57448041451	574480	4145190	0.0004109	0	0		
57449041451	574490	4145190	0.0005271	0	0		
57450041451	574500	4145190	0.0006918	0	0		
57451041451	574510	4145190	0.0009191	0	0		
57452041451	574520	4145190	0.001256	0	0		
57444041452	574440	4145200	0.0016686	0	0		
57445041452	574450	4145200	0.0019498	0	0		
57446041452	574460	4145200	0.0021067	0	0		
57447041452	574470	4145200	0.0020554	0	0		
57448041452	574480	4145200	0.0017957	0	0		
57449041452	574490	4145200	0.0014279	0	0		
57450041452	574500	4145200	0.0010762	0	0		
57451041452	574510	4145200	0.0007793	0	0		
57443041452	574430	4145210	0.0004587	0	0		
57444041452	574440	4145210	0.0003781	0	0		
57445041452	574450	4145210	0.0001257	0	0		
57446041452	574460	4145210	0.0001396	0	0		
57447041452	574470	4145210	0.0001602	0	0		
57448041452	574480	4145210	0.0001885	0	0		
57449041452	574490	4145210	0.0005424	0	0		
57450041452	574500	4145210	0.0004259	0	0		
57451041452	574510	4145210	0.000126	0	0		
57443041452	574430	4145220	0.0001402	0	0		
57444041452	574440	4145220	0.0001621	0	0		
57445041452	574450	4145220	0.0006265	0	0		
57446041452	574460	4145220	0.0004756	0	0		
57447041452	574470	4145220	0.0001236	0	0		
57448041452	574480	4145220	0.0001403	0	0		

Garvey Reservoir Rehab - Mitigated Surge Tank Telemetry

Cancer Risk Summary & Maximum Annual GLC for Chronic Calculations

Cancer Risk Summary

Max Risk: 0.015704

XY	X	Y	Offroad Risk	Haul Risk	Total Risk
7449041452	574490	4145220	0.005312667	1.29511E-06	0.005314
7450041452	574500	4145220	0.003944222	1.1738E-06	0.003945
7451041452	574510	4145220	0.000912832	1.13566E-06	0.000914
7452041452	574520	4145220	0.001041486	1.17345E-06	0.001043
7453041452	574530	4145220	0.005897187	1.72904E-06	0.005899
7444041452	574440	4145230	0.004283438	1.61797E-06	0.004285
7445041452	574450	4145230	0.00090328	1.25236E-06	0.000905
7446041452	574460	4145230	0.001032103	1.31629E-06	0.001033
7447041452	574470	4145230	0.006429891	2.32728E-06	0.006432
7448041452	574480	4145230	0.004593154	2.14334E-06	0.004595
7449041452	574490	4145230	0.000903956	1.55945E-06	0.000906
7450041452	574500	4145230	0.001009449	1.43644E-06	0.001011
7451041452	574510	4145230	0.00929983	4.93729E-06	0.009305
7452041452	574520	4145230	0.006564546	3.57691E-06	0.006568
7444041452	574440	4145240	0.004810648	2.69886E-06	0.004813
7445041452	574450	4145240	0.000879189	1.68007E-06	0.000881
7446041452	574460	4145240	0.000981132	1.57247E-06	0.000983
7447041452	574470	4145240	0.012147792	2.92656E-05	0.012177
7448041452	574480	4145240	0.00851785	8.45334E-06	0.008526
7449041452	574490	4145240	0.006479003	4.84361E-06	0.006484
7450041452	574500	4145240	0.004896868	3.33494E-06	0.0049
7451041452	574510	4145240	0.000850449	1.81837E-06	0.000852
7445041452	574450	4145250	0.000947827	1.73875E-06	0.00095
7446041452	574460	4145250	0.010569122	4.26332E-05	0.010612
7447041452	574470	4145250	0.007510091	1.08415E-05	0.007521
7448041452	574480	4145250	0.005796936	5.84538E-06	0.005803
7446041452	574460	4145260	0.004581658	3.96518E-06	0.004586
7447041452	574470	4145260	0.000816046	1.94643E-06	0.000818
7448041452	574480	4145260	0.000910888	1.9372E-06	0.000913
7447041452	574470	4145270	0.0106288	0.000112945	0.010742
7457041450	574570	4145030	0.008800347	2.98982E-05	0.00883
7463041450	574630	4145080	0.007163944	1.31771E-05	0.007177
7461041450	574610	4145090	0.005726185	7.26439E-06	0.005733
7462041450	574620	4145090	0.00455427	4.71349E-06	0.004559
7463041450	574630	4145090	0.000786714	2.20552E-06	0.000789
7464041450	574640	4145090	0.000872173	2.18907E-06	0.000874
7460041451	574600	4145100	0.000984936	2.33355E-06	0.000987
7461041451	574610	4145100	0.009283601	9.176E-05	0.009375
7462041451	574620	4145100	0.00844152	6.76456E-05	0.008509
7463041451	574630	4145100	0.007284821	2.49168E-05	0.00731
7464041451	574640	4145100	0.006184418	1.31014E-05	0.006198
7465041451	574650	4145100	0.005166601	7.87864E-06	0.005174
7459041451	574590	4145110	0.004295188	5.23435E-06	0.0043
7460041451	574600	4145110	0.00075155	2.4509E-06	0.000754
7461041451	574610	4145110	0.000831261	2.49475E-06	0.000834
7462041451	574620	4145110	0.000932189	2.61483E-06	0.000935
7463041451	574630	4145110	0.007343653	2.20589E-05	0.007366
7464041451	574640	4145110	0.007242218	8.73712E-05	0.00733
7465041451	574650	4145110	0.006777729	6.76682E-05	0.006845
7466041451	574660	4145110	0.006049087	2.39862E-05	0.006073
7460041451	574600	4145120	0.005268289	1.31235E-05	0.005281
7461041451	574610	4145120	0.004530518	8.29862E-06	0.004539
7462041451	574620	4145120	0.003858679	5.70009E-06	0.003864
7463041451	574630	4145120	0.000723486	2.78166E-06	0.000726
7464041451	574640	4145120	0.000791194	2.86458E-06	0.000794
7465041451	574650	4145120	0.000880457	2.96785E-06	0.000883
7466041451	574660	4145120	0.005237183	1.18839E-05	0.005249
7460041451	574600	4145130	0.005744866	2.31411E-05	0.005768
7462041451	574620	4145130	0.005739963	8.78034E-05	0.005828
7463041451	574630	4145130	0.005544531	6.60676E-05	0.005611
7464041451	574640	4145130	0.005135663	2.2172E-05	0.005158
7465041451	574650	4145130	0.004619865	1.21328E-05	0.004632

Max GLC for Chronic Calcs

Max GLC: 0.002107

XY	X	Y	2025	2026	2027	2034	2035
57449041452	574490	4145220	0.0007128	0	0		
57450041452	574500	4145220	0.0005293	0	0		
57451041452	574510	4145220	0.0001226	0	0		
57452041452	574520	4145220	0.0001398	0	0		
57453041452	574530	4145220	0.0007913	0	0		
57444041452	574440	4145230	0.0005748	0	0		
57445041452	574450	4145230	0.0001213	0	0		
57446041452	574460	4145230	0.0001386	0	0		
57447041452	574470	4145230	0.0008628	0	0		
57448041452	574480	4145230	0.0006164	0	0		
57449041452	574490	4145230	0.0001214	0	0		
57450041452	574500	4145230	0.0001356	0	0		
57451041452	574510	4145230	0.0012481	0	0		
57452041452	574520	4145230	0.000881	0	0		
57444041452	574440	4145240	0.0006456	0	0		
57445041452	574450	4145240	0.0001181	0	0		
57446041452	574460	4145240	0.0001318	0	0		
57447041452	574470	4145240	0.0016328	0	0		
57448041452	574480	4145240	0.0011436	0	0		
57449041452	574490	4145240	0.0008697	0	0		
57450041452	574500	4145240	0.0006573	0	0		
57451041452	574510	4145240	0.0001143	0	0		
57445041452	574450	4145250	0.0001273	0	0		
57446041452	574460	4145250	0.0014225	0	0		
57447041452	574470	4145250	0.0010087	0	0		
57448041452	574480	4145250	0.0007783	0	0		
57446041452	574460	4145260	0.0006151	0	0		
57447041452	574470	4145260	0.0001097	0	0		
57448041452	574480	4145260	0.0001224	0	0		
57447041452	574470	4145270	0.0014381	0	0		
57457041450	574570	4145030	0.0011838	0	0		
57463041450	574630	4145080	0.0009625	0	0		
57461041450	574610	4145090	0.000769	0	0		
57462041450	574620	4145090	0.0006115	0	0		
57463041450	574630	4145090	0.0001058	0	0		
57464041450	574640	4145090	0.0001172	0	0		
57460041451	574600	4145100	0.0001324	0	0		
57461041451	574610	4145100	0.0012553	0	0		
57462041451	574620	4145100	0.0011398	0	0		
57463041451	574630	4145100	0.00098	0	0		
57464041451	574640	4145100	0.0008311	0	0		
57465041451	574650	4145100	0.000694	0	0		
57459041451	574590	4145110	0.0005768	0	0		
57460041451	574600	4145110	0.0001011	0	0		
57461041451	574610	4145110	0.0001118	0	0		
57462041451	574620	4145110	0.0001253	0	0		
57463041451	574630	4145110	0.0009876	0	0		
57464041451	574640	4145110	0.000981	0	0		
57465041451	574650	4145110	0.0009166	0	0		
57466041451	574660	4145110	0.0008141	0	0		
57460041451	574600	4145120	0.0007082	0	0		
57461041451	574610	4145120	0.0006087	0	0		
57462041451	574620	4145120	0.0005183	0	0		
57463041451	574630	4145120	9.736E-05	0	0		
57464041451	574640	4145120	0.0001065	0	0		
57465041451	574650	4145120	0.0001184	0	0		
57466041451	574660	4145120	0.0007039	0	0		
57460041451	574600	4145130	0.0007732	0	0		
57462041451	574620	4145130	0.0007795	0	0		
57463041451	574630	4145130	0.000751	0	0		
57464041451	574640	4145130	0.0006914	0	0		
57465041451	574650	4145130	0.0006211	0	0		

Garvey Reservoir Rehab - Mitigated Surge Tank Telemetry

Cancer Risk Summary & Maximum Annual GLC for Chronic Calculations

Cancer Risk Summary

Max Risk: 0.015704

XY	X	Y	Offroad Risk	Haul Risk	Total Risk
7463041451	574630	4145140	0.003992827	8.5915E-06	0.004001
7464041451	574640	4145140	0.003466293	6.03364E-06	0.003472
7459041451	574590	4145150	0.000687477	3.17289E-06	0.000691
7460041451	574600	4145150	0.000750282	3.30838E-06	0.000754
7460041451	574600	4145160	0.000832191	3.43704E-06	0.000836
7461041451	574610	4145160	0.003396219	6.76879E-06	0.003403
7461041451	574610	4145170	0.003787758	8.5992E-06	0.003796
7457041450	574570	4145030	0.004171352	1.24368E-05	0.004184
7463041450	574630	4145080	0.004492817	2.30067E-05	0.004516
7461041450	574610	4145090	0.004646576	8.62032E-05	0.004733
7462041450	574620	4145090	0.004574219	5.70193E-05	0.004631
7463041450	574630	4145090	0.004306853	2.18404E-05	0.004329
7464041450	574640	4145090	0.003957662	1.20548E-05	0.00397
7460041451	574600	4145100	0.003575083	7.51331E-06	0.003583
7461041451	574610	4145100	0.003180162	5.44298E-06	0.003186
7462041451	574620	4145100	0.000653327	3.68987E-06	0.000657
7463041451	574630	4145100	0.00071292	3.89103E-06	0.000717
7464041451	574640	4145100	0.000785531	4.02073E-06	0.00079
7465041451	574650	4145100	0.000880542	3.86952E-06	0.000884
7459041451	574590	4145110	0.002544586	6.40285E-06	0.002551
7460041451	574600	4145110	0.002849568	7.4921E-06	0.002857
7461041451	574610	4145110	0.003143138	9.41381E-06	0.003153
7462041451	574620	4145110	0.003432228	1.34412E-05	0.003446
7463041451	574630	4145110	0.003643551	2.35743E-05	0.003667
7464041451	574640	4145110	0.003827656	7.85228E-05	0.003906
7465041451	574650	4145110	0.003800438	5.49885E-05	0.003855
7466041451	574660	4145110	0.003633323	2.19977E-05	0.003655
7460041451	574600	4145120	0.003405686	1.17816E-05	0.003417
7461041451	574610	4145120	0.003126655	7.59983E-06	0.003134
7462041451	574620	4145120	0.002831647	5.41188E-06	0.002837
7463041451	574630	4145120	0.000623488	4.30609E-06	0.000628
7464041451	574640	4145120	0.000676657	4.67272E-06	0.000681
7465041451	574650	4145120	0.000746732	4.65603E-06	0.000751
7466041451	574660	4145120	0.000826697	4.49214E-06	0.000831
7460041451	574600	4145130	0.000917819	4.44093E-06	0.000922
7462041451	574620	4145130	0.001422797	5.47153E-06	0.001428
7463041451	574630	4145130	0.001596421	5.79973E-06	0.001602
7464041451	574640	4145130	0.001769368	6.29959E-06	0.001776
7465041451	574650	4145130	0.001990496	6.76247E-06	0.001997
7463041451	574630	4145140	0.002216105	7.43929E-06	0.002224
7464041451	574640	4145140	0.002428443	8.45088E-06	0.002437
7459041451	574590	4145150	0.002673747	1.06162E-05	0.002684
7460041451	574600	4145150	0.002884309	1.50479E-05	0.002899
7460041451	574600	4145160	0.00303139	2.63187E-05	0.003058
7461041451	574610	4145160	0.003113215	8.38717E-05	0.003197
7461041451	574610	4145170	0.003183881	5.46098E-05	0.003238
7457041450	574570	4145030	0.003084052	2.19926E-05	0.003106
7463041450	574630	4145080	0.0029461	1.14376E-05	0.002958
7461041450	574610	4145090	0.002743568	7.54496E-06	0.002751
7462041450	574620	4145090	0.002520326	5.45742E-06	0.002526
7463041450	574630	4145090	0.000594579	5.19031E-06	0.0006
7464041450	574640	4145090	0.000640817	5.87729E-06	0.000647
7460041451	574600	4145100	0.000706665	5.52296E-06	0.000712
7461041451	574610	4145100	0.000775725	5.55638E-06	0.000781
7462041451	574620	4145100	0.000854338	5.65557E-06	0.00086
7463041451	574630	4145100	0.000944531	5.7736E-06	0.00095
7464041451	574640	4145100	0.001046557	5.95177E-06	0.001053
7465041451	574650	4145100	0.001158474	6.2746E-06	0.001165
7459041451	574590	4145110	0.001286198	6.58462E-06	0.001293
7460041451	574600	4145110	0.001422121	7.06042E-06	0.001429
7461041451	574610	4145110	0.001569709	7.596E-06	0.001577
7462041451	574620	4145110	0.001740797	8.06809E-06	0.001749

Max GLC for Chronic Calcs

Max GLC: 0.002107

XY	X	Y	2025	2026	2027	2034	2035
57463041451	574630	4145140	0.0005366	0	0		
57464041451	574640	4145140	0.0004657	0	0		
57459041451	574590	4145150	9.257E-05	0	0		
57460041451	574600	4145150	0.000101	0	0		
57460041451	574600	4145160	0.000112	0	0		
57461041451	574610	4145160	0.0004563	0	0		
57461041451	574610	4145170	0.0005091	0	0		
57457041450	574570	4145030	0.0005609	0	0		
57463041450	574630	4145080	0.0006052	0	0		
57461041450	574610	4145090	0.0006327	0	0		
57462041450	574620	4145090	0.0006198	0	0		
57463041450	574630	4145090	0.0005801	0	0		
57464041450	574640	4145090	0.0005322	0	0		
57460041451	574600	4145100	0.0004804	0	0		
57461041451	574610	4145100	0.0004272	0	0		
57462041451	574620	4145100	8.804E-05	0	0		
57463041451	574630	4145100	9.606E-05	0	0		
57464041451	574640	4145100	0.0001058	0	0		
57465041451	574650	4145100	0.0001185	0	0		
57459041451	574590	4145110	0.0003421	0	0		
57460041451	574600	4145110	0.0003831	0	0		
57461041451	574610	4145110	0.0004227	0	0		
57462041451	574620	4145110	0.0004619	0	0		
57463041451	574630	4145110	0.0004913	0	0		
57464041451	574640	4145110	0.000522	0	0		
57465041451	574650	4145110	0.0005158	0	0		
57466041451	574660	4145110	0.0004898	0	0		
57460041451	574600	4145120	0.0004582	0	0		
57461041451	574610	4145120	0.0004203	0	0		
57462041451	574620	4145120	0.0003805	0	0		
57463041451	574630	4145120	8.411E-05	0	0		
57464041451	574640	4145120	9.128E-05	0	0		
57465041451	574650	4145120	0.0001007	0	0		
57466041451	574660	4145120	0.0001114	0	0		
57460041451	574600	4145130	0.0001236	0	0		
57462041451	574620	4145130	0.0001915	0	0		
57463041451	574630	4145130	0.0002148	0	0		
57464041451	574640	4145130	0.000238	0	0		
57465041451	574650	4145130	0.0002678	0	0		
57463041451	574630	4145140	0.0002981	0	0		
57464041451	574640	4145140	0.0003267	0	0		
57459041451	574590	4145150	0.0003598	0	0		
57460041451	574600	4145150	0.0003886	0	0		
57460041451	574600	4145160	0.0004095	0	0		
57461041451	574610	4145160	0.0004267	0	0		
57461041451	574610	4145170	0.000433	0	0		
57457041450	574570	4145030	0.0004161	0	0		
57463041450	574630	4145080	0.0003965	0	0		
57461041450	574610	4145090	0.0003689	0	0		
57462041450	574620	4145090	0.0003387	0	0		
57463041450	574630	4145090	8.033E-05	0	0		
57464041450	574640	4145090	8.66E-05	0	0		
57460041451	574600	4145100	9.54E-05	0	0		
57461041451	574610	4145100	0.0001047	0	0		
57462041451	574620	4145100	0.0001152	0	0		
57463041451	574630	4145100	0.0001273	0	0		
57464041451	574640	4145100	0.000141	0	0		
57465041451	574650	4145100	0.0001561	0	0		
57459041451	574590	4145110	0.0001733	0	0		
57460041451	574600	4145110	0.0001915	0	0		
57461041451	574610	4145110	0.0002114	0	0		
57462041451	574620	4145110	0.0002344	0	0		

Garvey Reservoir Rehab - Mitigated Surge Tank Telemetry

Cancer Risk Summary & Maximum Annual GLC for Chronic Calculations

Cancer Risk Summary

Max Risk: 0.015704

XY	X	Y	Offroad Risk	Haul Risk	Total Risk
7463041451	574630	4145110	0.001915857	8.70469E-06	0.001925
7464041451	574640	4145110	0.002080435	9.6602E-06	0.00209
7465041451	574650	4145110	0.002222276	1.16157E-05	0.002234
7466041451	574660	4145110	0.002425991	1.69934E-05	0.002443
7460041451	574600	4145120	0.002558787	3.34903E-05	0.002592
7461041451	574610	4145120	0.002649233	0.000116659	0.002766
7462041451	574620	4145120	0.002691667	4.91914E-05	0.002741
7463041451	574630	4145120	0.002635624	2.16731E-05	0.002657
7464041451	574640	4145120	0.002541289	1.26332E-05	0.002554
7465041451	574650	4145120	0.002416862	7.4993E-06	0.002424
7466041451	574660	4145120	0.002247719	5.51063E-06	0.002253
7460041451	574600	4145130	0.000566346	6.69017E-06	0.000573
7462041451	574620	4145130	0.00060692	7.93613E-06	0.000615
7463041451	574630	4145130	0.000660089	8.23709E-06	0.000668
7464041451	574640	4145130	0.00072374	8.09581E-06	0.000732
7465041451	574650	4145130	0.000790856	8.19098E-06	0.000799
7463041451	574630	4145140	0.00086913	8.13628E-06	0.000877
7464041451	574640	4145140	0.000952307	8.2719E-06	0.000961
7459041451	574590	4145150	0.001046304	8.39072E-06	0.001055
7460041451	574600	4145150	0.001149852	8.84488E-06	0.001159
7460041451	574600	4145160	0.001265911	9.31606E-06	0.001275
7461041451	574610	4145160	0.001387887	9.71834E-06	0.001398
7461041451	574610	4145170	0.001520091	1.01331E-05	0.00153
7457041450	574570	4145030	0.001662353	1.07118E-05	0.001673
7463041450	574630	4145080	0.001812308	1.17499E-05	0.001824
7461041450	574610	4145090	0.001917209	1.37213E-05	0.001931
7462041450	574620	4145090	0.002072405	1.91339E-05	0.002092
7463041450	574630	4145090	0.002195987	4.3391E-05	0.002239
7464041450	574640	4145090	0.002268936	0.000119183	0.002388
7460041451	574600	4145100	0.002303508	3.98891E-05	0.002343
7461041451	574610	4145100	0.002288124	2.01939E-05	0.002308
7462041451	574620	4145100	0.002221261	1.26142E-05	0.002234
7463041451	574630	4145100	0.002121517	8.60852E-06	0.00213
7464041451	574640	4145100	0.001998527	6.24793E-06	0.002005
7465041451	574650	4145100	0	0	0
7459041451	574590	4145110	0	0	0
7460041451	574600	4145110	0	0	0
7461041451	574610	4145110	0	0	0
7462041451	574620	4145110	0	0	0
7463041451	574630	4145110	0	0	0
7464041451	574640	4145110	0	0	0
7465041451	574650	4145110	0	0	0
7466041451	574660	4145110	0	0	0
7460041451	574600	4145120	0	0	0
7461041451	574610	4145120	0	0	0
7462041451	574620	4145120	0	0	0
7463041451	574630	4145120	0	0	0
7464041451	574640	4145120	0	0	0
7465041451	574650	4145120	0	0	0
7466041451	574660	4145120	0	0	0
7460041451	574600	4145130	0	0	0
7462041451	574620	4145130	0	0	0
7463041451	574630	4145130	0	0	0
7464041451	574640	4145130	0	0	0
7465041451	574650	4145130	0	0	0
7463041451	574630	4145140	0	0	0
7464041451	574640	4145140	0	0	0
7459041451	574590	4145150	0	0	0
7460041451	574600	4145150	0	0	0
7460041451	574600	4145160	0	0	0
7461041451	574610	4145160	0	0	0
7461041451	574610	4145170	0	0	0

Max GLC for Chronic Calcs

Max GLC: 0.002107

XY	X	Y	2025	2026	2027	2034	2035
57463041451	574630	4145110	0.000258	0	0		
57464041451	574640	4145110	0.0002801	0	0		
57465041451	574650	4145110	0.0002994	0	0		
57466041451	574660	4145110	0.0003273	0	0		
57460041451	574600	4145120	0.0003469	0	0		
57461041451	574610	4145120	0.000368	0	0		
57462041451	574620	4145120	0.0003664	0	0		
57463041451	574630	4145120	0.0003559	0	0		
57464041451	574640	4145120	0.0003423	0	0		
57465041451	574650	4145120	0.000325	0	0		
57466041451	574660	4145120	0.0003021	0	0		
57460041451	574600	4145130	7.67E-05	0	0		
57462041451	574620	4145130	8.228E-05	0	0		
57463041451	574630	4145130	8.944E-05	0	0		
57464041451	574640	4145130	9.797E-05	0	0		
57465041451	574650	4145130	0.000107	0	0		
57463041451	574630	4145140	0.0001175	0	0		
57464041451	574640	4145140	0.0001286	0	0		
57459041451	574590	4145150	0.0001413	0	0		
57460041451	574600	4145150	0.0001552	0	0		
57460041451	574600	4145160	0.0001708	0	0		
57461041451	574610	4145160	0.0001872	0	0		
57461041451	574610	4145170	0.000205	0	0		
57457041450	574570	4145030	0.0002242	0	0		
57463041450	574630	4145080	0.0002444	0	0		
57461041450	574610	4145090	0.0002587	0	0		
57462041450	574620	4145090	0.0002801	0	0		
57463041450	574630	4145090	0.0002993	0	0		
57464041450	574640	4145090	0.0003173	0	0		
57460041451	574600	4145100	0.0003133	0	0		
57461041451	574610	4145100	0.0003091	0	0		
57462041451	574620	4145100	0.0002994	0	0		
57463041451	574630	4145100	0.0002855	0	0		
57464041451	574640	4145100	0.0002688	0	0		
57465041451	574650	4145100	0	0	0		
57459041451	574590	4145110	0	0	0		
57460041451	574600	4145110	0	0	0		
57461041451	574610	4145110	0	0	0		
57462041451	574620	4145110	0	0	0		
57463041451	574630	4145110	0	0	0		
57464041451	574640	4145110	0	0	0		
57465041451	574650	4145110	0	0	0		
57466041451	574660	4145110	0	0	0		
57460041451	574600	4145120	0	0	0		
57461041451	574610	4145120	0	0	0		
57462041451	574620	4145120	0	0	0		
57463041451	574630	4145120	0	0	0		
57464041451	574640	4145120	0	0	0		
57465041451	574650	4145120	0	0	0		
57466041451	574660	4145120	0	0	0		
57460041451	574600	4145130	0	0	0		
57462041451	574620	4145130	0	0	0		
57463041451	574630	4145130	0	0	0		
57464041451	574640	4145130	0	0	0		
57465041451	574650	4145130	0	0	0		
57463041451	574630	4145140	0	0	0		
57464041451	574640	4145140	0	0	0		
57459041451	574590	4145150	0	0	0		
57460041451	574600	4145150	0	0	0		
57460041451	574600	4145160	0	0	0		
57461041451	574610	4145160	0	0	0		
57461041451	574610	4145170	0	0	0		

Garvey Reservoir Rehab - Mitigated Surge Tank Telemetry

Construction Modeling Assumptions

AERMOD Sources

Volume Sources		
Offroad Construction Exhaust		
Release Height	3.66	m
Emissions rate	1	g/s
Init Vert Dimension	3.4	m
Line Volume		
Onroad Hauling Exhaust		
Plume Height	7.315	m
Plume Width	20	m
Release Height	3.66	m
Emissions rate	1	g/s

Meteorology:

SCAQMD	Pico	Rivera	2010 - 2012, 2015 - 2016

SCAQMD Met Data

https://www.aqmd.gov/home/air-quality/meteorological-data/data-for-aermod

AERMOD Sources

Garvey Reservoir Rehab - Mitigated Surge Tank Telemetry

Health Risk Assessment Risk Factors

Residential Risk	Abbreviation	UOM	3rd Trimester	0<2	2<16	16<30
Daily Breathing Rate (95th %'ile)	DBR	L/kg-day	361	1090	572	261
Fraction Of Time At Home [a]	FAH	unitless	1	1	1	0.73
Exposure Frequency	EF	days/year	0.96	0.96	0.96	0.96
Age Sensitivity Factor	ASF	unitless	10	10	3	1
Inhalation Absorption Factor	A	unitless	1	1	1	1
Conversion Factor	CF_1	m^3/L	0.001	0.001	0.001	0.001
Conversion Factor	CF_2	$\mu g/m^3$	0.001	0.001	0.001	0.001
Cancer Potency Factor (diesel exhaust)	CPF	$mg/kg\text{-}day^{-1}$	1.1	1.1	1.1	1.1
Averaging Time (for residential exposure)	AT	years	70.00	70.00	70.00	70.00

[a] assume school or daycare will have cancer risk of >1 per million

Garvey Reservoir Rehab - Mitigated Surge Tank Telemetry

Health Risk Assessment Exposure Duration Assumptions for Offroad Equipment

Residential Receptors

			Start Date	*9/30/2025*	*12/30/2025*
			End Date	*12/29/2025*	*12/30/2027*
	9/30/2025	*12/31/2025*	*Days*	*90*	*730*
Phase	Start Date	End Date	Duration (days)	3rd Tri	0<2
Demolition - 2025			1	0	0
Demolition - 2026			1	0	0
Site Preparation - 2025			1	0	0
Site Preparation - 2026			1	0	0
Grading - 2025			1	0	0
Grading - 2026			1	0	0
Infrastructure - 2025	9/30/2025	11/30/2025	62	62	0
Infrastructure - 2026			1	0	0
Paving - 2025	12/1/2025	12/31/2025	31	29	2
Architectural Coating - 2026			1	0	0

			Intake Factor for Inhalation, IF (m^3/kg-day)			Risk Calculation Part 1, R1		
Phase	Year	Year	Equation	3rd Trimester	0<2	Equation	3rd Trimester	0<2
Demolition - 2025		1900		0	0		0	0
Demolition - 2026		1900	$\frac{DBR \cdot FAH \cdot EF \cdot ED \cdot ASF \cdot A \cdot CF_1}{AT}$	0	0		0	0
Site Preparation - 2025		1900		0	0		0	0
Site Preparation - 2026		1900		0	0	$IF \cdot CPF \cdot CF_2$	0	0
Grading - 2025		1900		0	0		0	0
Grading - 2026		1900		0	0		0	0
Infrastructure - 2025		2025		0.008400075	0		9.24008E-06	0
Infrastructure - 2026		1900		0	0		0	0
Paving - 2025		2025		0.003929067	0.000818165		4.32197E-06	8.99981E-07
Architectural Coating - 2026		1900		0	0		0	0

Exposure Durations

Garvey Reservoir Rehab - Mitigated Surge Tank Telemetry

Offroad DPM Emissions, Ground Level Concentrations and Health Risk Calculations

Residential Receptors

Phase	Year	Emissions (lbs/day)	Work Hours Per Day	Emissions (g/s)
Demolition - 2025	1900		10	0
Demolition - 2026	1900		10	0
Site Preparation - 2025	1900		10	0
Site Preparation - 2026	1900		10	0
Grading - 2025	1900		10	0
Grading - 2026	1900		10	0
Infrastructure - 2025	2025	0.050	10	0.000629986
Infrastructure - 2026	1900		10	0
Paving - 2025	2025	0.040	10	0.000503989
Architectural Coating - 2026	1900		10	0

		AERMOD Column Identifier:	*4*	*4*	*4*	*4*	*4*	*4*	*4*	*4*	*4*	*4*				
Garvey Reservoir Rehab - Mitigated Surge Tank Telemetry			Demolition - 2025	Demolition - 2026	Site Preparation - 202	Site Preparation - 202	Grading - 2025	Grading - 2026	Infrastructure - 202	Infrastructure - 202	Paving - 2025	Architectural Coating -	Child Risk			
Unique Identifier	X (UTM)	Y (UTM)	1900	1900	1900	1900	1900	1900	2025	1900	2025	1900	3rd Trimester	0<2	Total	per million
396166.283767377.2	396166.28	3767377	0	0	0	0	0	0	3.26711E-05	0	2.61369E-05	0	4.14846E-10	2.35227E-11	4.38369E-10	0.0004384
396266.283767377.2	396266.28	3767377	0	0	0	0	0	0	3.69235E-05	0	2.95388E-05	0	4.68842E-10	2.65844E-11	4.95426E-10	0.0004954
396366.283767377.2	396366.28	3767377	0	0	0	0	0	0	4.35824E-05	0	3.4866E-05	0	5.53395E-10	3.13787E-11	5.84774E-10	0.0005848
396466.283767377.2	396466.28	3767377	0	0	0	0	0	0	5.05312E-05	0	4.04249E-05	0	6.41628E-10	3.63817E-11	6.7801E-10	0.000678
396566.283767377.2	396566.28	3767377	0	0	0	0	0	0	5.93636E-05	0	4.74909E-05	0	7.53779E-10	4.27409E-11	7.9652E-10	0.0007965
396666.283767377.2	396666.28	3767377	0	0	0	0	0	0	6.5695E-05	0	5.2556E-05	0	8.34172E-10	4.72994E-11	8.81472E-10	0.0008815
396766.283767377.2	396766.28	3767377	0	0	0	0	0	0	7.01553E-05	0	5.61242E-05	0	8.90808E-10	5.05107E-11	9.41318E-10	0.0009413
396866.283767377.2	396866.28	3767377	0	0	0	0	0	0	7.43069E-05	0	5.94455E-05	0	9.43523E-10	5.34998E-11	9.97023E-10	0.000997
396966.283767377.2	396966.28	3767377	0	0	0	0	0	0	7.95735E-05	0	6.36588E-05	0	1.0104E-09	5.72918E-11	1.06769E-09	0.0010677
397066.283767377.2	397066.28	3767377	0	0	0	0	0	0	8.24022E-05	0	6.59217E-05	0	1.04632E-09	5.93283E-11	1.10564E-09	0.0011056
397166.283767377.2	397166.28	3767377	0	0	0	0	0	0	8.03862E-05	0	6.4309E-05	0	1.02072E-09	5.78769E-11	1.07859E-09	0.0010786
397266.283767377.2	397266.28	3767377	0	0	0	0	0	0	7.49557E-05	0	5.99646E-05	0	9.51763E-10	5.3967E-11	1.00573E-09	0.0010057
397366.283767377.2	397366.28	3767377	0	0	0	0	0	0	7.14656E-05	0	5.71725E-05	0	9.07446E-10	5.14542E-11	9.58901E-10	0.0009589
397466.283767377.2	397466.28	3767377	0	0	0	0	0	0	6.64761E-05	0	5.31809E-05	0	8.44091E-10	4.78618E-11	8.91953E-10	0.000892
397566.283767377.2	397566.28	3767377	0	0	0	0	0	0	5.87588E-05	0	4.7007E-05	0	7.46099E-10	4.23055E-11	7.88405E-10	0.0007884
397666.283767377.2	397666.28	3767377	0	0	0	0	0	0	5.1451E-05	0	4.11608E-05	0	6.53307E-10	3.70439E-11	6.90351E-10	0.0006904
397766.283767377.2	397766.28	3767377	0	0	0	0	0	0	4.34501E-05	0	3.47601E-05	0	5.51715E-10	3.12835E-11	5.82999E-10	0.000583
397866.283767377.2	397866.28	3767377	0	0	0	0	0	0	3.77299E-05	0	3.01839E-05	0	4.79081E-10	2.71649E-11	5.06246E-10	0.0005062
396166.283767477.2	396166.28	3767477	0	0	0	0	0	0	3.5191E-05	0	2.81528E-05	0	4.46844E-10	2.5337E-11	4.72181E-10	0.0004722
396266.283767477.2	396266.28	3767477	0	0	0	0	0	0	3.95694E-05	0	3.16555E-05	0	5.02439E-10	2.84894E-11	5.30929E-10	0.0005309
396366.283767477.2	396366.28	3767477	0	0	0	0	0	0	4.80175E-05	0	3.8414E-05	0	6.09711E-10	3.45719E-11	6.44282E-10	0.0006443
396466.283767477.2	396466.28	3767477	0	0	0	0	0	0	5.77445E-05	0	4.61956E-05	0	7.3322E-10	4.15752E-11	7.74796E-10	0.0007748
396566.283767477.2	396566.28	3767477	0	0	0	0	0	0	6.8826E-05	0	5.50608E-05	0	8.73929E-10	4.95537E-11	9.23483E-10	0.0009235
396666.283767477.2	396666.28	3767477	0	0	0	0	0	0	7.96743E-05	0	6.37395E-05	0	1.01168E-09	5.73643E-11	1.06904E-09	0.001069
396766.283767477.2	396766.28	3767477	0	0	0	0	0	0	9.0214E-05	0	7.21712E-05	0	1.14551E-09	6.49527E-11	1.21046E-09	0.0012105
396866.283767477.2	396866.28	3767477	0	0	0	0	0	0	9.96701E-05	0	7.97361E-05	0	1.26558E-09	7.1761E-11	1.33734E-09	0.0013373
396966.283767477.2	396966.28	3767477	0	0	0	0	0	0	0.000109517	0	8.76134E-05	0	1.39061E-09	7.88504E-11	1.46946E-09	0.0014695
397066.283767477.2	397066.28	3767477	0	0	0	0	0	0	0.000115294	0	9.2235E-05	0	1.46396E-09	8.30098E-11	1.54697E-09	0.001547
397166.283767477.2	397166.28	3767477	0	0	0	0	0	0	0.000113303	0	9.06424E-05	0	1.43868E-09	8.15765E-11	1.52026E-09	0.0015203
397266.283767477.2	397266.28	3767477	0	0	0	0	0	0	0.000104445	0	8.35563E-05	0	1.32621E-09	7.51991E-11	1.40141E-09	0.0014014
397366.283767477.2	397366.28	3767477	0	0	0	0	0	0	9.49452E-05	0	7.59562E-05	0	1.20558E-09	6.83591E-11	1.27394E-09	0.0012739
397466.283767477.2	397466.28	3767477	0	0	0	0	0	0	8.57663E-05	0	6.8613E-05	0	1.08903E-09	6.17505E-11	1.15078E-09	0.0011508
397566.283767477.2	397566.28	3767477	0	0	0	0	0	0	7.36328E-05	0	5.89062E-05	0	9.34964E-10	5.30145E-11	9.87979E-10	0.000988
397666.283767477.2	397666.28	3767477	0	0	0	0	0	0	6.1915E-05	0	4.9532E-05	0	7.86176E-10	4.45779E-11	8.30754E-10	0.0008308
397766.283767477.2	397766.28	3767477	0	0	0	0	0	0	5.20243E-05	0	4.16194E-05	0	6.60586E-10	3.74567E-11	6.98043E-10	0.000698
397866.283767477.2	397866.28	3767477	0	0	0	0	0	0	4.40675E-05	0	3.5254E-05	0	5.59555E-10	3.1728E-11	5.91283E-10	0.0005913
396166.283767577.2	396166.28	3767577	0	0	0	0	0	0	3.66085E-05	0	2.92868E-05	0	4.64842E-10	2.63576E-11	4.912E-10	0.0004912
396266.283767577.2	396266.28	3767577	0	0	0	0	0	0	4.23414E-05	0	3.38731E-05	0	5.37636E-10	3.04851E-11	5.68122E-10	0.0005681
396366.283767577.2	396366.28	3767577	0	0	0	0	0	0	5.11864E-05	0	4.09491E-05	0	6.49947E-10	3.68534E-11	6.86801E-10	0.0006868
396466.283767577.2	396466.28	3767577	0	0	0	0	0	0	6.34711E-05	0	5.07769E-05	0	8.05935E-10	4.56982E-11	8.51633E-10	0.0008516
396566.283767577.2	396566.28	3767577	0	0	0	0	0	0	7.97751E-05	0	6.38201E-05	0	1.01296E-09	5.74369E-11	1.07039E-09	0.0010704

Garvey Reservoir Rehab - Mitigated Surge Tank Telemetry			Demolition - 2025	Demolition - 2026	ite Preparation - 202	te Preparation - 202	Grading - 2025	Grading - 2026	nfrastructure - 202	nfrastructure - 202	Paving - 2025	itectural Coating -	Child Risk			
Unique Identifier	X (UTM)	Y (UTM)	1900	1900	1900	1900	1900	1900	1900	1900	2025	1900	3rd Trimester	0<2	Total	per million
396666.283767577.2	396666.28	3767577	0	0	0	0	0	0	9.96323E-05	0	7.97058E-05	0	1.2651E-09	7.17338E-11	1.33683E-09	0.0013368
396766.283767577.2	396766.28	3767577	0	0	0	0	0	0	0.000115325	0	9.22602E-05	0	1.46436E-09	8.30325E-11	1.54739E-09	0.0015474
396866.283767577.2	396866.28	3767577	0	0	0	0	0	0	0.000139391	0	0.000111513	0	1.76994E-09	1.00359E-10	1.8703E-09	0.0018703
396966.283767577.2	396966.28	3767577	0	0	0	0	0	0	0.000158769	0	0.000127015	0	2.016E-09	1.14311E-10	2.13031E-09	0.0021303
397066.283767577.2	397066.28	3767577	0	0	0	0	0	0	0.000170014	0	0.000136011	0	2.15878E-09	1.22408E-10	2.28119E-09	0.0022812
397166.283767577.2	397166.28	3767577	0	0	0	0	0	0	0.000170814	0	0.000136652	0	2.16894E-09	1.22984E-10	2.29193E-09	0.0022919
397266.283767577.2	397266.28	3767577	0	0	0	0	0	0	0.000155361	0	0.000124289	0	1.97272E-09	1.11857E-10	2.08458E-09	0.0020846
397366.283767577.2	397366.28	3767577	0	0	0	0	0	0	0.000133589	0	0.000106871	0	1.69626E-09	9.61818E-11	1.79244E-09	0.0017924
397466.283767577.2	397466.28	3767577	0	0	0	0	0	0	0.000115017	0	9.20133E-05	0	1.46044E-09	8.28102E-11	1.54325E-09	0.0015433
397566.283767577.2	397566.28	3767577	0	0	0	0	0	0	9.34395E-05	0	7.47516E-05	0	1.18646E-09	6.72751E-11	1.25374E-09	0.0012537
397666.283767577.2	397666.28	3767577	0	0	0	0	0	0	7.5592E-05	0	6.04736E-05	0	9.59842E-10	5.44251E-11	1.01427E-09	0.0010143
397766.283767577.2	397766.28	3767577	0	0	0	0	0	0	6.13228E-05	0	4.90583E-05	0	7.78657E-10	4.41515E-11	8.22808E-10	0.0008228
397866.283767577.2	397866.28	3767577	0	0	0	0	0	0	5.05249E-05	0	4.04199E-05	0	6.41548E-10	3.63772E-11	6.77925E-10	0.0006779
396166.283767677.2	396166.28	3767677	0	0	0	0	0	0	3.84229E-05	0	3.07383E-05	0	4.8788E-10	2.76639E-11	5.15544E-10	0.0005155
396266.283767677.2	396266.28	3767677	0	0	0	0	0	0	4.48928E-05	0	3.59142E-05	0	5.70034E-10	3.23221E-11	6.02356E-10	0.0006024
396366.283767677.2	396366.28	3767677	0	0	0	0	0	0	5.52498E-05	0	4.41998E-05	0	7.01543E-10	3.9779E-11	7.41322E-10	0.0007413
396466.283767677.2	396466.28	3767677	0	0	0	0	0	0	7.04261E-05	0	5.63409E-05	0	8.94247E-10	5.07058E-11	9.44953E-10	0.000945
396566.283767677.2	396566.28	3767677	0	0	0	0	0	0	9.00502E-05	0	7.20402E-05	0	1.14343E-09	6.48348E-11	1.20826E-09	0.0012083
396666.283767677.2	396666.28	3767677	0	0	0	0	0	0	0.00011244	0	8.99519E-05	0	1.42772E-09	8.09551E-11	1.50868E-09	0.0015087
396766.283767677.2	396766.28	3767677	0	0	0	0	0	0	0.000150352	0	0.000120282	0	1.90913E-09	1.08252E-10	2.01738E-09	0.0020174
396866.283767677.2	396866.28	3767677	0	0	0	0	0	0	0.000204802	0	0.000163842	0	2.60051E-09	1.47454E-10	2.74796E-09	0.002748
396966.283767677.2	396966.28	3767677	0	0	0	0	0	0	0.000263555	0	0.000210844	0	3.34653E-09	1.89755E-10	3.53628E-09	0.0035363
397066.283767677.2	397066.28	3767677	0	0	0	0	0	0	0.000290518	0	0.000232414	0	3.6889E-09	2.09169E-10	3.89807E-09	0.0038981
397166.283767677.2	397166.28	3767677	0	0	0	0	0	0	0.000288597	0	0.000230877	0	3.6645E-09	2.07785E-10	3.87229E-09	0.0038723
397266.283767677.2	397266.28	3767677	0	0	0	0	0	0	0.000263662	0	0.000210929	0	3.34789E-09	1.89833E-10	3.53772E-09	0.0035377
397366.283767677.2	397366.28	3767677	0	0	0	0	0	0	0.0002022	0	0.00016176	0	2.56747E-09	1.45581E-10	2.71305E-09	0.0027131
397466.283767677.2	397466.28	3767677	0	0	0	0	0	0	0.000160854	0	0.000128683	0	2.04247E-09	1.15813E-10	2.15829E-09	0.0021583
397566.283767677.2	397566.28	3767677	0	0	0	0	0	0	0.000120214	0	9.61712E-05	0	1.52644E-09	8.65522E-11	1.61299E-09	0.001613
397666.283767677.2	397666.28	3767677	0	0	0	0	0	0	9.16315E-05	0	7.33052E-05	0	1.16351E-09	6.59733E-11	1.22948E-09	0.0012295
397766.283767677.2	397766.28	3767677	0	0	0	0	0	0	7.15664E-05	0	5.72531E-05	0	9.08726E-10	5.15267E-11	9.60253E-10	0.0009603
397866.283767677.2	397866.28	3767677	0	0	0	0	0	0	5.69129E-05	0	4.55304E-05	0	7.22661E-10	4.09765E-11	7.63638E-10	0.0007636
396166.283767777.2	396166.28	3767777	0	0	0	0	0	0	3.94497E-05	0	3.15598E-05	0	5.00919E-10	2.84032E-11	5.29323E-10	0.0005293
396266.283767777.2	396266.28	3767777	0	0	0	0	0	0	4.78537E-05	0	3.8283E-05	0	6.07631E-10	3.4454E-11	6.42085E-10	0.0006421
396366.283767777.2	396366.28	3767777	0	0	0	0	0	0	5.85383E-05	0	4.68306E-05	0	7.433E-10	4.21467E-11	7.85446E-10	0.0007854
396466.283767777.2	396466.28	3767777	0	0	0	0	0	0	7.454E-05	0	5.9632E-05	0	9.46483E-10	5.36676E-11	1.00015E-09	0.0010002
396566.283767777.2	396566.28	3767777	0	0	0	0	0	0	9.54744E-05	0	7.63795E-05	0	1.2123E-09	6.87401E-11	1.28104E-09	0.001281
396666.283767777.2	396666.28	3767777	0	0	0	0	0	0	0.000129733	0	0.000103786	0	1.64731E-09	9.34058E-11	1.74071E-09	0.0017407
396766.283767777.2	396766.28	3767777	0	0	0	0	0	0	0.000192851	0	0.000154281	0	2.44876E-09	1.3885E-10	2.58761E-09	0.0025876
396866.283767777.2	396866.28	3767777	0	0	0	0	0	0	0.000301291	0	0.000241033	0	3.82569E-09	2.16925E-10	4.04261E-09	0.0040426
396966.283767777.2	396966.28	3767777	0	0	0	0	0	0	0.000461736	0	0.000369389	0	5.86296E-09	3.32443E-10	6.19541E-09	0.0061954
397066.283767777.2	397066.28	3767777	0	0	0	0	0	0	0.00059935	0	0.00047948	0	7.61034E-09	4.31523E-10	8.04187E-09	0.0080419
397166.283767777.2	397166.28	3767777	0	0	0	0	0	0	0.000606154	0	0.000484923	0	7.69674E-09	4.36422E-10	8.13316E-09	0.0081332
397266.283767777.2	397266.28	3767777	0	0	0	0	0	0	0.000497513	0	0.00039801	0	6.31725E-09	3.58202E-10	6.67545E-09	0.0066754
397366.283767777.2	397366.28	3767777	0	0	0	0	0	0	0.000328746	0	0.000262997	0	4.1743E-09	2.36692E-10	4.41099E-09	0.004411
397466.283767777.2	397466.28	3767777	0	0	0	0	0	0	0.000225655	0	0.000180524	0	2.86529E-09	1.62468E-10	3.02776E-09	0.0030278
397566.283767777.2	397566.28	3767777	0	0	0	0	0	0	0.000154057	0	0.000123245	0	1.95616E-09	1.10919E-10	2.06708E-09	0.0020671
397666.283767777.2	397666.28	3767777	0	0	0	0	0	0	0.000109429	0	8.75429E-05	0	1.38949E-09	7.87869E-11	1.46827E-09	0.0014683
397766.283767777.2	397766.28	3767777	0	0	0	0	0	0	8.24274E-05	0	6.59419E-05	0	1.04664E-09	5.93465E-11	1.10598E-09	0.001106
397866.283767777.2	397866.28	3767777	0	0	0	0	0	0	6.40633E-05	0	5.12506E-05	0	8.13454E-10	4.61246E-11	8.59579E-10	0.0008596
396166.283767877.2	396166.28	3767877	0	0	0	0	0	0	3.98907E-05	0	3.19126E-05	0	5.06519E-10	2.87207E-11	5.3524E-10	0.0005352
396266.283767877.2	396266.28	3767877	0	0	0	0	0	0	4.86727E-05	0	3.89382E-05	0	6.1803E-10	3.50436E-11	6.53073E-10	0.0006531
396366.283767877.2	396366.28	3767877	0	0	0	0	0	0	6.0548E-05	0	4.84384E-05	0	7.68818E-10	4.35936E-11	8.12411E-10	0.0008124
396466.283767877.2	396466.28	3767877	0	0	0	0	0	0	7.65874E-05	0	6.12699E-05	0	9.72481E-10	5.51418E-11	1.02762E-09	0.0010276
396566.283767877.2	396566.28	3767877	0	0	0	0	0	0	0.000100495	0	8.03963E-05	0	1.27606E-09	7.23552E-11	1.34841E-09	0.0013484
397466.283767877.2	397466.28	3767877	0	0	0	0	0	0	0.000298122	0	0.000238498	0	3.78545E-09	2.14643E-10	4.0001E-09	0.0040001
397566.283767877.2	397566.28	3767877	0	0	0	0	0	0	0.00019098	0	0.000152784	0	2.425E-09	1.37503E-10	2.56251E-09	0.0025625
397666.283767877.2	397666.28	3767877	0	0	0	0	0	0	0.000129771	0	0.000103817	0	1.64779E-09	9.34331E-11	1.74122E-09	0.0017412
397766.283767877.2	397766.28	3767877	0	0	0	0	0	0	9.36852E-05	0	7.49482E-05	0	1.18958E-09	6.7452E-11	1.25704E-09	0.001257
397866.283767877.2	397866.28	3767877	0	0	0	0	0	0	7.00167E-05	0	5.60133E-05	0	8.89048E-10	5.04109E-11	9.39459E-10	0.0009395
396166.283767977.2	396166.28	3767977	0	0	0	0	0	0	3.93867E-05	0	3.15094E-05	0	5.00119E-10	2.83579E-11	5.28477E-10	0.0005285
396266.283767977.2	396266.28	3767977	0	0	0	0	0	0	4.83199E-05	0	3.86559E-05	0	6.1355E-10	3.47896E-11	6.4834E-10	0.0006483
396366.283767977.2	396366.28	3767977	0	0	0	0	0	0	6.02267E-05	0	4.81813E-05	0	7.64738E-10	4.33623E-11	8.081E-10	0.0008081
396466.283767977.2	396466.28	3767977	0	0	0	0	0	0	7.61023E-05	0	6.08819E-05	0	9.66322E-10	5.47925E-11	1.02111E-09	0.0010211
397466.283767977.2	397466.28	3767977	0	0	0	0	0	0	0.000405327	0	0.000324261	0	5.1467E-09	2.91829E-10	5.43853E-09	0.0054385
397566.283767977.2	397566.28	3767977	0	0	0	0	0	0	0.000231709	0	0.000185367	0	2.94216E-09	1.66827E-10	3.10899E-09	0.003109
397666.283767977.2	397666.28	3767977	0	0	0	0	0	0	0.000149332	0	0.000119466	0	1.89617E-09	1.07517E-10	2.00368E-09	0.0020037
397766.283767977.2	397766.28	3767977	0	0	0	0	0	0	0.000102392	0	8.19133E-05	0	1.30013E-09	7.37204E-11	1.37385E-09	0.0013739
397866.283767977.2	397866.28	3767977	0	0	0	0	0	0	7.4162E-05	0	5.93296E-05	0	9.41684E-10	5.33955E-11	9.95079E-10	0.0009951
396166.283768077.2	396166.28	3768077	0	0	0	0	0	0	3.9708E-05	0	3.17664E-05	0	5.04199E-10	2.85892E-11	5.32788E-10	0.0005328

Garvey Reservoir Rehab - Mitigated Surge Tank Telemetry			Demolition - 2025	Demolition - 2026	ite Preparation - 202	te Preparation - 202	Grading - 2025	Grading - 2026	nfrastructure - 202	nfrastructure - 202	Paving - 2025	itectural Coating -	Child Risk			
Unique Identifier	X (UTM)	Y (UTM)	1900	1900	1900	1900	1900	1900	1900	1900	2025	1900	3rd Trimester	0<2	Total	per million
396266.283768077.2	396266.28	3768077	0	0	0	0	0	0	4.72679E-05	0	3.78143E-05	0	6.00191E-10	3.40321E-11	6.34223E-10	0.0006342
396366.283768077.2	396366.28	3768077	0	0	0	0	0	0	5.86706E-05	0	4.69365E-05	0	7.4498E-10	4.2242E-11	7.87221E-10	0.0007872
396466.283768077.2	396466.28	3768077	0	0	0	0	0	0	7.53841E-05	0	6.03073E-05	0	9.57202E-10	5.42754E-11	1.01148E-09	0.0010115
397466.283768077.2	397466.28	3768077	0	0	0	0	0	0	0.000499755	0	0.000399804	0	6.34572E-09	3.59816E-10	6.70554E-09	0.0067055
397566.283768077.2	397566.28	3768077	0	0	0	0	0	0	0.000267668	0	0.000214135	0	3.39876E-09	1.92717E-10	3.59148E-09	0.0035915
397666.283768077.2	397666.28	3768077	0	0	0	0	0	0	0.00016711	0	0.000133688	0	2.12191E-09	1.20317E-10	2.24222E-09	0.0022422
397766.283768077.2	397766.28	3768077	0	0	0	0	0	0	0.000114859	0	9.18873E-05	0	1.45844E-09	8.26968E-11	1.54114E-09	0.0015411
397866.283768077.2	397866.28	3768077	0	0	0	0	0	0	8.21754E-05	0	6.57403E-05	0	1.04344E-09	5.9165E-11	1.1026E-09	0.0011026
396166.283768177.2	396166.28	3768177	0	0	0	0	0	0	3.8952E-05	0	3.11616E-05	0	4.946E-10	2.80449E-11	5.22645E-10	0.0005226
396266.283768177.2	396266.28	3768177	0	0	0	0	0	0	4.65056E-05	0	3.72045E-05	0	5.90512E-10	3.34833E-11	6.23995E-10	0.000624
396366.283768177.2	396366.28	3768177	0	0	0	0	0	0	5.73665E-05	0	4.58932E-05	0	7.28421E-10	4.1303E-11	7.69724E-10	0.0007697
396466.283768177.2	396466.28	3768177	0	0	0	0	0	0	7.20641E-05	0	5.76513E-05	0	9.15046E-10	5.18851E-11	9.66931E-10	0.0009669
397466.283768177.2	397466.28	3768177	0	0	0	0	0	0	0.000512078	0	0.000409662	0	6.50219E-09	3.68688E-10	6.87088E-09	0.0068709
397566.283768177.2	397566.28	3768177	0	0	0	0	0	0	0.000290184	0	0.000232147	0	3.68466E-09	2.08928E-10	3.89359E-09	0.0038936
397666.283768177.2	397666.28	3768177	0	0	0	0	0	0	0.000181701	0	0.00014536	0	2.30717E-09	1.30822E-10	2.43799E-09	0.002438
397766.283768177.2	397766.28	3768177	0	0	0	0	0	0	0.000125896	0	0.000100717	0	1.59859E-09	9.06435E-11	1.68923E-09	0.0016892
397866.283768177.2	397866.28	3768177	0	0	0	0	0	0	8.85949E-05	0	7.0876E-05	0	1.12495E-09	6.3787E-11	1.18874E-09	0.0011887
396166.283768277.2	396166.28	3768277	0	0	0	0	0	0	3.77362E-05	0	3.01889E-05	0	4.79161E-10	2.71695E-11	5.06331E-10	0.0005063
396266.283768277.2	396266.28	3768277	0	0	0	0	0	0	4.41872E-05	0	3.53498E-05	0	5.61074E-10	3.18141E-11	5.92889E-10	0.0005929
396366.283768277.2	396366.28	3768277	0	0	0	0	0	0	5.39961E-05	0	4.31969E-05	0	6.85624E-10	3.88764E-11	7.24501E-10	0.0007245
396466.283768277.2	396466.28	3768277	0	0	0	0	0	0	6.71754E-05	0	5.37403E-05	0	8.52971E-10	4.83653E-11	9.01336E-10	0.0009013
397366.283768277.2	397366.28	3768277	0	0	0	0	0	0	0.00071419	0	0.000571352	0	9.06854E-09	5.14206E-10	9.58275E-09	0.0095827
397466.283768277.2	397466.28	3768277	0	0	0	0	0	0	0.000443932	0	0.000355146	0	5.6369E-09	3.19625E-10	5.95653E-09	0.0059565
397566.283768277.2	397566.28	3768277	0	0	0	0	0	0	0.000287179	0	0.000229743	0	3.6465E-09	2.06765E-10	3.85327E-09	0.0038533
397666.283768277.2	397666.28	3768277	0	0	0	0	0	0	0.000187219	0	0.000149775	0	2.37725E-09	1.34795E-10	2.51204E-09	0.002512
397766.283768277.2	397766.28	3768277	0	0	0	0	0	0	0.000129947	0	0.000103958	0	1.65003E-09	9.35601E-11	1.74359E-09	0.0017436
397866.283768277.2	397866.28	3768277	0	0	0	0	0	0	9.64005E-05	0	7.71204E-05	0	1.22406E-09	6.94069E-11	1.29347E-09	0.0012935
396166.283768377.2	396166.28	3768377	0	0	0	0	0	0	3.59848E-05	0	2.87878E-05	0	4.56923E-10	2.59085E-11	4.82831E-10	0.0004828
396266.283768377.2	396266.28	3768377	0	0	0	0	0	0	4.18563E-05	0	3.3485E-05	0	5.31477E-10	3.01359E-11	5.61613E-10	0.0005616
396366.283768377.2	396366.28	3768377	0	0	0	0	0	0	5.02855E-05	0	4.02284E-05	0	6.38508E-10	3.62048E-11	6.74713E-10	0.0006747
396466.283768377.2	396466.28	3768377	0	0	0	0	0	0	6.16441E-05	0	4.93153E-05	0	7.82736E-10	4.43829E-11	8.27119E-10	0.0008271
397266.283768377.2	397266.28	3768377	0	0	0	0	0	0	0.000576059	0	0.000460847	0	7.31461E-09	4.14754E-10	7.72936E-09	0.0077294
397366.283768377.2	397366.28	3768377	0	0	0	0	0	0	0.000481946	0	0.000385557	0	6.11958E-09	3.46994E-10	6.46658E-09	0.0064666
397466.283768377.2	397466.28	3768377	0	0	0	0	0	0	0.000357883	0	0.000286306	0	4.54427E-09	2.5767E-10	4.80194E-09	0.0048019
397566.283768377.2	397566.28	3768377	0	0	0	0	0	0	0.000259485	0	0.000207588	0	3.29485E-09	1.86825E-10	3.48168E-09	0.0034817
397666.283768377.2	397666.28	3768377	0	0	0	0	0	0	0.000185827	0	0.000148662	0	2.35957E-09	1.33793E-10	2.49336E-09	0.0024934
397766.283768377.2	397766.28	3768377	0	0	0	0	0	0	0.000134256	0	0.000107405	0	1.70474E-09	9.66625E-11	1.8014E-09	0.0018014
397866.283768377.2	397866.28	3768377	0	0	0	0	0	0	0.000102543	0	8.20343E-05	0	1.30205E-09	7.38293E-11	1.37588E-09	0.0013759
396166.283768477.2	396166.28	3768477	0	0	0	0	0	0	3.38996E-05	0	2.71196E-05	0	4.30445E-10	2.44072E-11	4.54852E-10	0.0004549
396266.283768477.2	396266.28	3768477	0	0	0	0	0	0	3.94182E-05	0	3.15346E-05	0	5.00519E-10	2.83805E-11	5.289E-10	0.0005289
396366.283768477.2	396366.28	3768477	0	0	0	0	0	0	4.68395E-05	0	3.74716E-05	0	5.94752E-10	3.37237E-11	6.28475E-10	0.0006285
396466.283768477.2	396466.28	3768477	0	0	0	0	0	0	5.57223E-05	0	4.45778E-05	0	7.07543E-10	4.01192E-11	7.47662E-10	0.0007477
397166.283768477.2	397166.28	3768477	0	0	0	0	0	0	0.000321312	0	0.000257049	0	4.07991E-09	2.3134E-10	4.31125E-09	0.0043112
397266.283768477.2	397266.28	3768477	0	0	0	0	0	0	0.000363924	0	0.000291139	0	4.62098E-09	2.6202E-10	4.883E-09	0.004883
397366.283768477.2	397366.28	3768477	0	0	0	0	0	0	0.000338655	0	0.000270924	0	4.30013E-09	2.43827E-10	4.54396E-09	0.004544
397466.283768477.2	397466.28	3768477	0	0	0	0	0	0	0.00028035	0	0.00022428	0	3.55979E-09	2.01848E-10	3.76164E-09	0.0037616
397566.283768477.2	397566.28	3768477	0	0	0	0	0	0	0.000213748	0	0.000170998	0	2.7141E-09	1.53895E-10	2.868E-09	0.002868
397666.283768477.2	397666.28	3768477	0	0	0	0	0	0	0.000163393	0	0.000130715	0	2.07471E-09	1.17641E-10	2.19235E-09	0.0021924
397766.283768477.2	397766.28	3768477	0	0	0	0	0	0	0.000129708	0	0.000103766	0	1.64699E-09	9.33877E-11	1.74037E-09	0.0017404
397866.283768477.2	397866.28	3768477	0	0	0	0	0	0	9.95693E-05	0	7.96554E-05	0	1.2643E-09	7.16884E-11	1.33599E-09	0.001336
396166.283768577.2	396166.28	3768577	0	0	0	0	0	0	3.11024E-05	0	2.48819E-05	0	3.94928E-10	2.23933E-11	4.17321E-10	0.0004173
396266.283768577.2	396266.28	3768577	0	0	0	0	0	0	3.664E-05	0	2.9312E-05	0	4.65242E-10	2.63802E-11	4.91622E-10	0.0004916
396366.283768577.2	396366.28	3768577	0	0	0	0	0	0	4.2858E-05	0	3.42864E-05	0	5.44196E-10	3.08571E-11	5.75053E-10	0.0005751
396466.283768577.2	396466.28	3768577	0	0	0	0	0	0	5.02855E-05	0	4.02284E-05	0	6.38508E-10	3.62048E-11	6.74713E-10	0.0006747
396566.283768577.2	396566.28	3768577	0	0	0	0	0	0	6.14173E-05	0	4.91339E-05	0	7.79857E-10	4.42196E-11	8.24076E-10	0.0008241
396866.283768577.2	396866.28	3768577	0	0	0	0	0	0	0.000119609	0	9.56873E-05	0	1.51876E-09	8.61168E-11	1.60487E-09	0.0016049
396966.283768577.2	396966.28	3768577	0	0	0	0	0	0	0.000150182	0	0.000120146	0	1.90697E-09	1.08129E-10	2.01509E-09	0.0020151
397066.283768577.2	397066.28	3768577	0	0	0	0	0	0	0.00018441	0	0.000147528	0	2.34157E-09	1.32772E-10	2.47434E-09	0.0024743
397166.283768577.2	397166.28	3768577	0	0	0	0	0	0	0.000221239	0	0.000176991	0	2.80921E-09	1.59288E-10	2.9685E-09	0.0029685
397266.283768577.2	397266.28	3768577	0	0	0	0	0	0	0.000241543	0	0.000193234	0	3.06703E-09	1.73907E-10	3.24094E-09	0.0032409
397366.283768577.2	397366.28	3768577	0	0	0	0	0	0	0.000240352	0	0.000192282	0	3.05191E-09	1.7305E-10	3.22496E-09	0.003225
397466.283768577.2	397466.28	3768577	0	0	0	0	0	0	0.000213767	0	0.000171014	0	2.71434E-09	1.53909E-10	2.86825E-09	0.0028682
397566.283768577.2	397566.28	3768577	0	0	0	0	0	0	0.000177297	0	0.000141838	0	2.25126E-09	1.27651E-10	2.37891E-09	0.0023789
397666.283768577.2	397666.28	3768577	0	0	0	0	0	0	0.000142812	0	0.000114249	0	1.81337E-09	1.02822E-10	1.91619E-09	0.0019162
397766.283768577.2	397766.28	3768577	0	0	0	0	0	0	0.000113656	0	9.09246E-05	0	1.44316E-09	8.18305E-11	1.52499E-09	0.001525
397866.283768577.2	397866.28	3768577	0	0	0	0	0	0	9.20914E-05	0	7.36731E-05	0	1.16935E-09	6.63044E-11	1.23565E-09	0.0012356
396166.283768677.2	396166.28	3768677	0	0	0	0	0	0	2.8866E-05	0	2.30928E-05	0	3.6653E-10	2.07831E-11	3.87313E-10	0.0003873
396266.283768677.2	396266.28	3768677	0	0	0	0	0	0	3.32192E-05	0	2.65753E-05	0	4.21806E-10	2.39173E-11	4.45723E-10	0.0004457
396366.283768677.2	396366.28	3768677	0	0	0	0	0	0	3.89961E-05	0	3.11969E-05	0	4.9516E-10	2.80766E-11	5.23236E-10	0.0005232

Garvey Reservoir Rehab - Mitigated Surge Tank Telemetry			Demolition - 2025	Demolition - 2026	ite Preparation - 202	te Preparation - 202	Grading - 2025	Grading - 2026	nfrastructure - 202	nfrastructure - 202	Paving - 2025	itectural Coating -	Child Risk			
Unique Identifier	X (UTM)	Y (UTM)	1900	1900	1900	1900	1900	1900	2025	1900	2025	1900	3rd Trimester	0<2	Total	per million
396466.283768677.2	396466.28	3768677	0	0	0	0	0	0	4.51826E-05	0	3.61461E-05	0	5.73713E-10	3.25308E-11	6.06244E-10	0.0006062
396566.283768677.2	396566.28	3768677	0	0	0	0	0	0	5.40024E-05	0	4.32019E-05	0	6.85704E-10	3.88809E-11	7.24585E-10	0.0007246
396666.283768677.2	396666.28	3768677	0	0	0	0	0	0	6.49264E-05	0	5.19411E-05	0	8.24413E-10	4.6746E-11	8.71159E-10	0.0008712
396766.283768677.2	396766.28	3768677	0	0	0	0	0	0	7.82947E-05	0	6.26357E-05	0	9.94159E-10	5.6371E-11	1.05053E-09	0.0010505
396866.283768677.2	396866.28	3768677	0	0	0	0	0	0	9.5046E-05	0	7.60368E-05	0	1.20686E-09	6.84317E-11	1.27529E-09	0.0012753
396966.283768677.2	396966.28	3768677	0	0	0	0	0	0	0.000114777	0	9.18217E-05	0	1.4574E-09	8.26378E-11	1.54004E-09	0.00154
397066.283768677.2	397066.28	3768677	0	0	0	0	0	0	0.000137444	0	0.000109955	0	1.74522E-09	9.89577E-11	1.84418E-09	0.0018442
397166.283768677.2	397166.28	3768677	0	0	0	0	0	0	0.000158284	0	0.000126627	0	2.00984E-09	1.13962E-10	2.1238E-09	0.0021238
397366.283768677.2	397366.28	3768677	0	0	0	0	0	0	0.00017656	0	0.000141248	0	2.2419E-09	1.2712E-10	2.36902E-09	0.002369
397466.283768677.2	397466.28	3768677	0	0	0	0	0	0	0.000164111	0	0.000131289	0	2.08383E-09	1.18158E-10	2.20199E-09	0.002202
397566.283768677.2	397566.28	3768677	0	0	0	0	0	0	0.000143864	0	0.000115091	0	1.82673E-09	1.0358E-10	1.93031E-09	0.0019303
397666.283768677.2	397666.28	3768677	0	0	0	0	0	0	0.000121701	0	9.73606E-05	0	1.54531E-09	8.76227E-11	1.63294E-09	0.0016329
397766.283768677.2	397766.28	3768677	0	0	0	0	0	0	0.000100464	0	8.03711E-05	0	1.27566E-09	7.23325E-11	1.34799E-09	0.001348
397866.283768677.2	397866.28	3768677	0	0	0	0	0	0	8.38575E-05	0	6.7086E-05	0	1.06479E-09	6.03761E-11	1.12517E-09	0.0011252
396166.283768777.2	396166.28	3768777	0	0	0	0	0	0	2.70642E-05	0	2.16514E-05	0	3.43652E-10	1.94858E-11	3.63138E-10	0.0003631
396266.283768777.2	396266.28	3768777	0	0	0	0	0	0	3.05858E-05	0	2.44687E-05	0	3.88368E-10	2.20213E-11	4.1039E-10	0.0004104
396366.283768777.2	396366.28	3768777	0	0	0	0	0	0	3.55627E-05	0	2.84502E-05	0	4.51563E-10	2.56046E-11	4.77168E-10	0.0004772
396466.283768777.2	396466.28	3768777	0	0	0	0	0	0	4.09239E-05	0	3.27391E-05	0	5.19638E-10	2.94646E-11	5.49102E-10	0.0005491
396566.283768777.2	396566.28	3768777	0	0	0	0	0	0	4.7312E-05	0	3.78496E-05	0	6.00751E-10	3.40639E-11	6.34815E-10	0.0006348
396666.283768777.2	396666.28	3768777	0	0	0	0	0	0	5.56152E-05	0	4.44921E-05	0	7.06183E-10	4.00421E-11	7.46225E-10	0.0007462
396766.283768777.2	396766.28	3768777	0	0	0	0	0	0	6.57139E-05	0	5.25711E-05	0	8.34412E-10	4.7313E-11	8.81725E-10	0.0008817
396866.283768777.2	396866.28	3768777	0	0	0	0	0	0	7.74883E-05	0	6.19906E-05	0	9.8392E-10	5.57904E-11	1.03971E-09	0.0010397
396966.283768777.2	396966.28	3768777	0	0	0	0	0	0	9.08566E-05	0	7.26853E-05	0	1.15367E-09	6.54154E-11	1.21908E-09	0.0012191
397066.283768777.2	397066.28	3768777	0	0	0	0	0	0	0.000105718	0	8.45744E-05	0	1.34237E-09	7.61154E-11	1.41849E-09	0.0014185
397166.283768777.2	397166.28	3768777	0	0	0	0	0	0	0.000119231	0	9.53849E-05	0	1.51396E-09	8.58447E-11	1.5998E-09	0.0015998
397266.283768777.2	397266.28	3768777	0	0	0	0	0	0	0.000130672	0	0.000104537	0	1.65923E-09	9.40817E-11	1.75331E-09	0.0017533
397366.283768777.2	397366.28	3768777	0	0	0	0	0	0	0.000133192	0	0.000106553	0	1.69122E-09	9.5896E-11	1.78712E-09	0.0017871
397466.283768777.2	397466.28	3768777	0	0	0	0	0	0	0.000126634	0	0.000101307	0	1.60795E-09	9.11742E-11	1.69912E-09	0.0016991
397566.283768777.2	397566.28	3768777	0	0	0	0	0	0	0.00011467	0	9.17361E-05	0	1.45604E-09	8.25607E-11	1.5386E-09	0.0015386
397666.283768777.2	397666.28	3768777	0	0	0	0	0	0	0.000100735	0	8.05878E-05	0	1.2791E-09	7.25275E-11	1.35162E-09	0.0013516
397766.283768777.2	397766.28	3768777	0	0	0	0	0	0	8.68562E-05	0	6.94849E-05	0	1.10287E-09	6.25351E-11	1.16541E-09	0.0011654
397866.283768777.2	397866.28	3768777	0	0	0	0	0	0	7.47353E-05	0	5.97882E-05	0	9.48963E-10	5.38083E-11	1.00277E-09	0.0010028
396166.283768877.2	396166.28	3768877	0	0	0	0	0	0	2.50167E-05	0	2.00134E-05	0	3.17654E-10	1.80117E-11	3.35666E-10	0.0003357
396266.283768877.2	396266.28	3768877	0	0	0	0	0	0	2.83683E-05	0	2.26946E-05	0	3.60211E-10	2.04247E-11	3.80635E-10	0.0003806
396366.283768877.2	396366.28	3768877	0	0	0	0	0	0	3.19592E-05	0	2.55674E-05	0	4.05807E-10	2.30101E-11	4.28817E-10	0.0004288
396466.283768877.2	396466.28	3768877	0	0	0	0	0	0	3.71188E-05	0	2.9695E-05	0	4.71322E-10	2.6725E-11	4.98047E-10	0.000498
396566.283768877.2	396566.28	3768877	0	0	0	0	0	0	4.23729E-05	0	3.38983E-05	0	5.38036E-10	3.05078E-11	5.68544E-10	0.0005685
396666.283768877.2	396666.28	3768877	0	0	0	0	0	0	4.84522E-05	0	3.87618E-05	0	6.1523E-10	3.48849E-11	6.50115E-10	0.0006501
396766.283768877.2	396766.28	3768877	0	0	0	0	0	0	5.60625E-05	0	4.485E-05	0	7.11862E-10	4.03641E-11	7.52226E-10	0.0007522
396866.283768877.2	396866.28	3768877	0	0	0	0	0	0	6.58398E-05	0	5.26719E-05	0	8.36012E-10	4.74037E-11	8.83416E-10	0.0008834
396966.283768877.2	396966.28	3768877	0	0	0	0	0	0	7.52707E-05	0	6.02166E-05	0	9.55762E-10	5.41938E-11	1.00996E-09	0.00101
397066.283768877.2	397066.28	3768877	0	0	0	0	0	0	8.45819E-05	0	6.76655E-05	0	1.07399E-09	6.08977E-11	1.13489E-09	0.0011349
397166.283768877.2	397166.28	3768877	0	0	0	0	0	0	9.38931E-05	0	7.51145E-05	0	1.19222E-09	6.76016E-11	1.25982E-09	0.0012598
397266.283768877.2	397266.28	3768877	0	0	0	0	0	0	0.000101686	0	8.13488E-05	0	1.29118E-09	7.32124E-11	1.36439E-09	0.0013644
397366.283768877.2	397366.28	3768877	0	0	0	0	0	0	0.000103853	0	8.30826E-05	0	1.31869E-09	7.47728E-11	1.39347E-09	0.0013935
397466.283768877.2	397466.28	3768877	0	0	0	0	0	0	0.000101195	0	8.09557E-05	0	1.28494E-09	7.28586E-11	1.35779E-09	0.0013578
397566.283768877.2	397566.28	3768877	0	0	0	0	0	0	9.42963E-05	0	7.54371E-05	0	1.19734E-09	6.78919E-11	1.26523E-09	0.0012652
397666.283768877.2	397666.28	3768877	0	0	0	0	0	0	8.44874E-05	0	6.75899E-05	0	1.07279E-09	6.08297E-11	1.13362E-09	0.0011336
397766.283768877.2	397766.28	3768877	0	0	0	0	0	0	7.47794E-05	0	5.98235E-05	0	9.49523E-10	5.384E-11	1.00336E-09	0.0010034
397866.283768877.2	397866.28	3768877	0	0	0	0	0	0	6.60855E-05	0	5.28684E-05	0	8.39132E-10	4.75806E-11	8.86712E-10	0.0008867
3964253767739	396425	3767739	0	0	0	0	0	0	6.64698E-05	0	5.31759E-05	0	8.44011E-10	4.78573E-11	8.91869E-10	0.0008919
3964753767739	396475	3767739	0	0	0	0	0	0	7.52077E-05	0	6.01662E-05	0	9.54962E-10	5.41484E-11	1.00911E-09	0.0010091
3965253767739	396525	3767739	0	0	0	0	0	0	8.42606E-05	0	6.74085E-05	0	1.06991E-09	6.06664E-11	1.13058E-09	0.0011306
3965753767739	396575	3767739	0	0	0	0	0	0	9.70053E-05	0	7.76042E-05	0	1.23174E-09	6.98423E-11	1.30158E-09	0.0013016
3966253767739	396625	3767739	0	0	0	0	0	0	0.000108515	0	8.68121E-05	0	1.37789E-09	7.81292E-11	1.45602E-09	0.001456
3966753767739	396675	3767739	0	0	0	0	0	0	0.000126426	0	0.00010114	0	1.60531E-09	9.10245E-11	1.69633E-09	0.0016963
3967253767739	396725	3767739	0	0	0	0	0	0	0.000153931	0	0.000123145	0	1.95456E-09	1.10828E-10	2.06539E-09	0.0020654
3967753767739	396775	3767739	0	0	0	0	0	0	0.000180409	0	0.000144327	0	2.29077E-09	1.29892E-10	2.42067E-09	0.0024207
3968253767739	396825	3767739	0	0	0	0	0	0	0.000220747	0	0.000176598	0	2.80297E-09	1.58935E-10	2.96191E-09	0.0029619
3968753767739	396875	3767739	0	0	0	0	0	0	0.00027165	0	0.00021732	0	3.44932E-09	1.95584E-10	3.6449E-09	0.0036449
3969253767739	396925	3767739	0	0	0	0	0	0	0.000324096	0	0.000259277	0	4.11527E-09	2.33345E-10	4.34861E-09	0.0043486
3969753767739	396975	3767739	0	0	0	0	0	0	0.000377318	0	0.000301854	0	4.79105E-09	2.71663E-10	5.06271E-09	0.0050627
3970253767739	397025	3767739	0	0	0	0	0	0	0.000420541	0	0.000336433	0	5.33989E-09	3.02783E-10	5.64267E-09	0.0056427
3970753767739	397075	3767739	0	0	0	0	0	0	0.000443964	0	0.000355171	0	5.6373E-09	3.19647E-10	5.95695E-09	0.0059569
3971253767739	397125	3767739	0	0	0	0	0	0	0.000448449	0	0.000358759	0	5.69426E-09	3.22877E-10	6.01713E-09	0.0060171
3971753767739	397175	3767739	0	0	0	0	0	0	0.000436574	0	0.000349259	0	5.54347E-09	3.14327E-10	5.8578E-09	0.0058578
3972253767739	397225	3767739	0	0	0	0	0	0	0.000406391	0	0.000325113	0	5.16022E-09	2.92596E-10	5.45282E-09	0.0054528
3972753767739	397275	3767739	0	0	0	0	0	0	0.000372523	0	0.000298019	0	4.73018E-09	2.68211E-10	4.99839E-09	0.0049984
3973253767739	397325	3767739	0	0	0	0	0	0	0.000314892	0	0.000251914	0	3.9984E-09	2.26718E-10	4.22511E-09	0.0042251

Garvey Reservoir Rehab - Mitigated Surge Tank Telemetry			Demolition - 2025	Demolition - 2026	ite Preparation - 202	te Preparation - 202	Grading - 2025	Grading - 2026	nfrastructure - 202	nfrastructure - 202	Paving - 2025	itectural Coating -	Child Risk			
Unique Identifier	X (UTM)	Y (UTM)	1900	1900	1900	1900	1900	1900	2025	1900	2025	1900	3rd Trimester	0<2	Total	per million
3973753767739	397375	3767739	0	0	0	0	0	0	0.000261759	0	0.000209407	0	3.32373E-09	1.88463E-10	3.51219E-09	0.0035122
3974253767739	397425	3767739	0	0	0	0	0	0	0.000219519	0	0.000175615	0	2.78737E-09	1.5805E-10	2.94542E-09	0.0029454
3974753767739	397475	3767739	0	0	0	0	0	0	0.000192058	0	0.000153646	0	2.43868E-09	1.38279E-10	2.57696E-09	0.002577
3975253767739	397525	3767739	0	0	0	0	0	0	0.000161314	0	0.000129051	0	2.04831E-09	1.16144E-10	2.16446E-09	0.0021645
3964253767789	396425	3767789	0	0	0	0	0	0	6.80259E-05	0	5.44207E-05	0	8.6377E-10	4.89776E-11	9.12748E-10	0.0009127
3964753767789	396475	3767789	0	0	0	0	0	0	7.64992E-05	0	6.11994E-05	0	9.71361E-10	5.50783E-11	1.02644E-09	0.0010264
3965253767789	396525	3767789	0	0	0	0	0	0	8.62073E-05	0	6.89658E-05	0	1.09463E-09	6.2068E-11	1.1567E-09	0.0011567
3965753767789	396575	3767789	0	0	0	0	0	0	9.81329E-05	0	7.85063E-05	0	1.24606E-09	7.06542E-11	1.31671E-09	0.0013167
3966253767789	396625	3767789	0	0	0	0	0	0	0.000114298	0	9.14387E-05	0	1.45132E-09	8.22931E-11	1.53362E-09	0.0015336
3966753767789	396675	3767789	0	0	0	0	0	0	0.000136115	0	0.000108892	0	1.72834E-09	9.80006E-11	1.82634E-09	0.0018263
3967253767789	396725	3767789	0	0	0	0	0	0	0.000168238	0	0.00013459	0	2.13623E-09	1.21129E-10	2.25736E-09	0.0022574
3967753767789	396775	3767789	0	0	0	0	0	0	0.000204865	0	0.000163892	0	2.60131E-09	1.475E-10	2.74881E-09	0.0027488
3968253767789	396825	3767789	0	0	0	0	0	0	0.000257797	0	0.000206237	0	3.27341E-09	1.8561E-10	3.45902E-09	0.003459
3968753767789	396875	3767789	0	0	0	0	0	0	0.000325722	0	0.000260577	0	4.1359E-09	2.34515E-10	4.37042E-09	0.0043704
3969253767789	396925	3767789	0	0	0	0	0	0	0.000408338	0	0.00032667	0	5.18494E-09	2.93997E-10	5.47894E-09	0.0054789
3969753767789	396975	3767789	0	0	0	0	0	0	0.00051204	0	0.000409632	0	6.50171E-09	3.68661E-10	6.87037E-09	0.0068704
3970253767789	397025	3767789	0	0	0	0	0	0	0.000608144	0	0.000486516	0	7.72201E-09	4.37855E-10	8.15987E-09	0.0081599
3970753767789	397075	3767789	0	0	0	0	0	0	0.000671861	0	0.000537489	0	8.53107E-09	4.8373E-10	9.0148E-09	0.0090148
3971253767789	397125	3767789	0	0	0	0	0	0	0.000692733	0	0.000554186	0	8.79609E-09	4.98757E-10	9.29484E-09	0.0092948
3971753767789	397175	3767789	0	0	0	0	0	0	0.000666273	0	0.000533019	0	8.46011E-09	4.79707E-10	8.93982E-09	0.0089398
3972253767789	397225	3767789	0	0	0	0	0	0	0.000596496	0	0.000477197	0	7.57411E-09	4.29468E-10	8.00357E-09	0.0080036
3972753767789	397275	3767789	0	0	0	0	0	0	0.000523254	0	0.000418603	0	6.6441E-09	3.76735E-10	7.02084E-09	0.0070208
3973253767789	397325	3767789	0	0	0	0	0	0	0.000426293	0	0.000341034	0	5.41292E-09	3.06924E-10	5.71984E-09	0.0057198
3973753767789	397375	3767789	0	0	0	0	0	0	0.000334195	0	0.000267356	0	4.2435E-09	2.40615E-10	4.48411E-09	0.0044841
3974253767789	397425	3767789	0	0	0	0	0	0	0.00026661	0	0.000213288	0	3.38533E-09	1.91955E-10	3.57728E-09	0.0035773
3974753767789	397475	3767789	0	0	0	0	0	0	0.000226316	0	0.000181053	0	2.87369E-09	1.62944E-10	3.03663E-09	0.0030366
3975253767789	397525	3767789	0	0	0	0	0	0	0.000184599	0	0.000147679	0	2.34397E-09	1.32908E-10	2.47688E-09	0.0024769
3964253767839	396425	3767839	0	0	0	0	0	0	6.91788E-05	0	5.5343E-05	0	8.78409E-10	4.98077E-11	9.28216E-10	0.0009282
3964753767839	396475	3767839	0	0	0	0	0	0	7.84585E-05	0	6.27668E-05	0	9.96239E-10	5.64889E-11	1.05273E-09	0.0010527
3965253767839	396525	3767839	0	0	0	0	0	0	8.7524E-05	0	7.00192E-05	0	1.11135E-09	6.30159E-11	1.17437E-09	0.0011744
3965753767839	396575	3767839	0	0	0	0	0	0	0.000101321	0	8.10565E-05	0	1.28654E-09	7.29494E-11	1.35948E-09	0.0013595
3966253767839	396625	3767839	0	0	0	0	0	0	0.000119219	0	9.53749E-05	0	1.5138E-09	8.58356E-11	1.59963E-09	0.0015996
3966753767839	396675	3767839	0	0	0	0	0	0	0.000148103	0	0.000118483	0	1.88057E-09	1.06632E-10	1.9872E-09	0.0019872
3967253767839	396725	3767839	0	0	0	0	0	0	0.000182513	0	0.000146011	0	2.31749E-09	1.31407E-10	2.4489E-09	0.0024489
3967753767839	396775	3767839	0	0	0	0	0	0	0.000228225	0	0.00018258	0	2.89792E-09	1.64319E-10	3.06224E-09	0.0030622
3968253767839	396825	3767839	0	0	0	0	0	0	0.00029278	0	0.000234224	0	3.71762E-09	2.10797E-10	3.92842E-09	0.0039284
3968753767839	396875	3767839	0	0	0	0	0	0	0.000384247	0	0.000307398	0	4.87904E-09	2.76652E-10	5.1557E-09	0.0051557
3969253767839	396925	3767839	0	0	0	0	0	0	0.000510522	0	0.000408417	0	6.48243E-09	3.67568E-10	6.85E-09	0.00685
3969753767839	396975	3767839	0	0	0	0	0	0	0.000697735	0	0.000558188	0	8.8596E-09	5.02359E-10	9.36196E-09	0.009362
3970253767839	397025	3767839	0	0	0	0	0	0	0.000926917	0	0.000741534	0	1.17697E-08	6.67367E-10	1.24371E-08	0.0124371
3970753767839	397075	3767839	0	0	0	0	0	0	0.001083141	0	0.000866513	0	1.37534E-08	7.79846E-10	1.45332E-08	0.0145332
3971253767839	397125	3767839	0	0	0	0	0	0	0.0011703	0	0.00093624	0	1.48601E-08	8.42598E-10	1.57027E-08	0.0157027
3971753767839	397175	3767839	0	0	0	0	0	0	0.001141837	0	0.00091347	0	1.44987E-08	8.22106E-10	1.53208E-08	0.0153208
3972253767839	397225	3767839	0	0	0	0	0	0	0.000997526	0	0.000798021	0	1.26663E-08	7.18204E-10	1.33845E-08	0.0133845
3972753767839	397275	3767839	0	0	0	0	0	0	0.00079319	0	0.000634552	0	1.00717E-08	5.71085E-10	1.06427E-08	0.0106427
3973253767839	397325	3767839	0	0	0	0	0	0	0.000597806	0	0.000478245	0	7.59074E-09	4.30412E-10	8.02116E-09	0.0080212
3973753767839	397375	3767839	0	0	0	0	0	0	0.000432895	0	0.000346316	0	5.49675E-09	3.11678E-10	5.80843E-09	0.0058084
3974753767839	397475	3767839	0	0	0	0	0	0	0.000254766	0	0.000203813	0	3.23494E-09	1.83428E-10	3.41837E-09	0.0034184
3975253767839	397525	3767839	0	0	0	0	0	0	0.000209981	0	0.000167985	0	2.66626E-09	1.51183E-10	2.81745E-09	0.0028174
3964253767889	396425	3767889	0	0	0	0	0	0	6.97773E-05	0	5.58218E-05	0	8.86008E-10	5.02386E-11	9.36247E-10	0.0009362
3964753767889	396475	3767889	0	0	0	0	0	0	7.74757E-05	0	6.19806E-05	0	9.8376E-10	5.57813E-11	1.03954E-09	0.0010395
3965253767889	396525	3767889	0	0	0	0	0	0	8.89414E-05	0	7.11532E-05	0	1.12935E-09	6.40365E-11	1.19338E-09	0.0011934
3965753767889	396575	3767889	0	0	0	0	0	0	0.000104641	0	8.37126E-05	0	1.32869E-09	7.53397E-11	1.40403E-09	0.001404
3974753767889	397475	3767889	0	0	0	0	0	0	0.000301291	0	0.000241033	0	3.82569E-09	2.16925E-10	4.04261E-09	0.0040426
3975253767889	397525	3767889	0	0	0	0	0	0	0.000236541	0	0.000189233	0	3.00352E-09	1.70306E-10	3.17382E-09	0.0031738
3964253767939	396425	3767939	0	0	0	0	0	0	6.99474E-05	0	5.59579E-05	0	8.88168E-10	5.0361E-11	9.38529E-10	0.0009385
3964753767939	396475	3767939	0	0	0	0	0	0	7.78474E-05	0	6.22779E-05	0	9.8848E-10	5.60489E-11	1.04453E-09	0.0010445
3965253767939	396525	3767939	0	0	0	0	0	0	8.99872E-05	0	7.19898E-05	0	1.14263E-09	6.47894E-11	1.20742E-09	0.0012074
3974753767939	397475	3767939	0	0	0	0	0	0	0.000348011	0	0.000278409	0	4.41892E-09	2.50562E-10	4.66948E-09	0.0046695
3975253767939	397525	3767939	0	0	0	0	0	0	0.000264153	0	0.000211323	0	3.35413E-09	1.90186E-10	3.54431E-09	0.0035443
3964253767989	396425	3767989	0	0	0	0	0	0	6.86181E-05	0	5.48945E-05	0	8.71289E-10	4.9404E-11	9.20693E-10	0.0009207
3964753767989	396475	3767989	0	0	0	0	0	0	7.78852E-05	0	6.23081E-05	0	9.8896E-10	5.60762E-11	1.04504E-09	0.001045
3974753767989	397475	3767989	0	0	0	0	0	0	0.000395946	0	0.000316757	0	5.02759E-09	2.85075E-10	5.31267E-09	0.0053127
3975253767989	397525	3767989	0	0	0	0	0	0	0.000293958	0	0.000235166	0	3.73258E-09	2.11645E-10	3.94422E-09	0.0039442
3964253768039	396425	3768039	0	0	0	0	0	0	6.80322E-05	0	5.44258E-05	0	8.6385E-10	4.89822E-11	9.12832E-10	0.0009128
3964753768039	396475	3768039	0	0	0	0	0	0	7.76206E-05	0	6.20965E-05	0	9.856E-10	5.58857E-11	1.04149E-09	0.0010415
3974753768039	397475	3768039	0	0	0	0	0	0	0.00043951	0	0.000351608	0	5.58075E-09	3.1644E-10	5.89719E-09	0.0058972
3975253768039	397525	3768039	0	0	0	0	0	0	0.000319239	0	0.000255391	0	4.05359E-09	2.29847E-10	4.28344E-09	0.0042834
3964253768089	396425	3768089	0	0	0	0	0	0	6.73203E-05	0	5.38563E-05	0	8.54811E-10	4.84696E-11	9.0328E-10	0.0009033

Garvey Reservoir Rehab - Mitigated Surge Tank Telemetry			Demolition - 2025	Demolition - 2026	ite Preparation - 202	te Preparation - 202	Grading - 2025	Grading - 2026	nfrastructure - 202	nfrastructure - 202	Paving - 2025	itectural Coating -	Child Risk			
Unique Identifier	X (UTM)	Y (UTM)	1900	1900	1900	1900	1900	1900	2025	1900	2025	1900	3rd Trimester	0<2	Total	per million
3964753768089	396475	3768089	0	0	0	0	0	0	7.69213E-05	0	6.1537E-05	0	9.76721E-10	5.53822E-11	1.0321E-09	0.0010321
3974753768089	397475	3768089	0	0	0	0	0	0	0.000479212	0	0.000383369	0	6.08487E-09	3.45025E-10	6.42989E-09	0.0064299
3975253768089	397525	3768089	0	0	0	0	0	0	0.000342322	0	0.000273857	0	4.34669E-09	2.46467E-10	4.59315E-09	0.0045932
3964253768139	396425	3768139	0	0	0	0	0	0	6.73707E-05	0	5.38966E-05	0	8.55451E-10	4.85059E-11	9.03956E-10	0.000904
3964753768139	396475	3768139	0	0	0	0	0	0	7.52329E-05	0	6.01864E-05	0	9.55282E-10	5.41666E-11	1.00945E-09	0.0010094
3974253768139	397425	3768139	0	0	0	0	0	0	0.000693104	0	0.000554484	0	8.80081E-09	4.99025E-10	9.29983E-09	0.0092998
3974753768139	397475	3768139	0	0	0	0	0	0	0.000489247	0	0.000391398	0	6.2123E-09	3.52251E-10	6.56455E-09	0.0065645
3975253768139	397525	3768139	0	0	0	0	0	0	0.000358531	0	0.000286825	0	4.55251E-09	2.58137E-10	4.81065E-09	0.0048106
3964253768189	396425	3768189	0	0	0	0	0	0	6.55249E-05	0	5.24199E-05	0	8.32012E-10	4.71769E-11	8.79189E-10	0.0008792
3964753768189	396475	3768189	0	0	0	0	0	0	7.31225E-05	0	5.8498E-05	0	9.28485E-10	5.26471E-11	9.81132E-10	0.0009811
3973753768189	397375	3768189	0	0	0	0	0	0	0.000905359	0	0.000724287	0	1.14959E-08	6.51845E-10	1.21478E-08	0.0121478
3974253768189	397425	3768189	0	0	0	0	0	0	0.000634824	0	0.00050786	0	8.06079E-09	4.57064E-10	8.51785E-09	0.0085178
3974753768189	397475	3768189	0	0	0	0	0	0	0.000482872	0	0.000386297	0	6.13134E-09	3.4766E-10	6.479E-09	0.006479
3975253768189	397525	3768189	0	0	0	0	0	0	0.000364957	0	0.000291966	0	4.6341E-09	2.62764E-10	4.89687E-09	0.0048969
3964253768239	396425	3768239	0	0	0	0	0	0	6.33829E-05	0	5.07063E-05	0	8.04815E-10	4.56347E-11	8.50449E-10	0.0008504
3964753768239	396475	3768239	0	0	0	0	0	0	7.06403E-05	0	5.65123E-05	0	8.96967E-10	5.086E-11	9.47827E-10	0.0009478
3973753768239	397375	3768239	0	0	0	0	0	0	0.000787703	0	0.000630163	0	1.0002E-08	5.67134E-10	1.05691E-08	0.0105691
3974253768239	397425	3768239	0	0	0	0	0	0	0.000559717	0	0.000447774	0	7.1071E-09	4.02988E-10	7.51009E-09	0.0075101
3974753768239	397475	3768239	0	0	0	0	0	0	0.000432038	0	0.000345631	0	5.48587E-09	3.11061E-10	5.79694E-09	0.0057969
3975253768239	397525	3768239	0	0	0	0	0	0	0.000341465	0	0.000273172	0	4.33581E-09	2.4585E-10	4.58166E-09	0.0045817
3964253768289	396425	3768289	0	0	0	0	0	0	6.08189E-05	0	4.86551E-05	0	7.72257E-10	4.37887E-11	8.16046E-10	0.000816
3964753768289	396475	3768289	0	0	0	0	0	0	6.78873E-05	0	5.43098E-05	0	8.6201E-10	4.88778E-11	9.10888E-10	0.0009109
3973253768289	397325	3768289	0	0	0	0	0	0	0.000792151	0	0.000633721	0	1.00585E-08	5.70337E-10	1.06288E-08	0.0106288
3973753768289	397375	3768289	0	0	0	0	0	0	0.000655879	0	0.000524703	0	8.32812E-09	4.72223E-10	8.80035E-09	0.0088003
3974253768289	397425	3768289	0	0	0	0	0	0	0.00053392	0	0.000427136	0	6.77953E-09	3.84414E-10	7.16394E-09	0.0071639
3974753768289	397475	3768289	0	0	0	0	0	0	0.000426765	0	0.000341412	0	5.41892E-09	3.07265E-10	5.72618E-09	0.0057262
3975253768289	397525	3768289	0	0	0	0	0	0	0.000339424	0	0.000271539	0	4.30989E-09	2.4438E-10	4.55427E-09	0.0045543
3964253768339	396425	3768339	0	0	0	0	0	0	5.86328E-05	0	4.69062E-05	0	7.445E-10	4.22147E-11	7.86714E-10	0.0007867
3964753768339	396475	3768339	0	0	0	0	0	0	6.5002E-05	0	5.20016E-05	0	8.25373E-10	4.68004E-11	8.72173E-10	0.0008722
3965253768339	396525	3768339	0	0	0	0	0	0	7.3406E-05	0	5.87248E-05	0	9.32084E-10	5.28512E-11	9.84936E-10	0.0009849
3972753768339	397275	3768339	0	0	0	0	0	0	0.000691895	0	0.000553516	0	8.78545E-09	4.98154E-10	9.2836E-09	0.0092836
3973253768339	397325	3768339	0	0	0	0	0	0	0.000629136	0	0.000503309	0	7.98855E-09	4.52968E-10	8.44152E-09	0.0084415
3973753768339	397375	3768339	0	0	0	0	0	0	0.000542928	0	0.000434343	0	6.89392E-09	3.909E-10	7.28482E-09	0.0072848
3974253768339	397425	3768339	0	0	0	0	0	0	0.000460917	0	0.000368733	0	5.85256E-09	3.31853E-10	6.18442E-09	0.0061844
3974753768339	397475	3768339	0	0	0	0	0	0	0.00038506	0	0.000308048	0	4.88936E-09	2.77237E-10	5.1666E-09	0.0051666
3975253768339	397525	3768339	0	0	0	0	0	0	0.000320115	0	0.000256092	0	4.06471E-09	2.30478E-10	4.29519E-09	0.0042952
3964253768389	396425	3768389	0	0	0	0	0	0	5.60121E-05	0	4.48097E-05	0	7.11222E-10	4.03278E-11	7.5155E-10	0.0007516
3964753768389	396475	3768389	0	0	0	0	0	0	6.19528E-05	0	4.95623E-05	0	7.86656E-10	4.46051E-11	8.31261E-10	0.0008313
3965253768389	396525	3768389	0	0	0	0	0	0	6.94749E-05	0	5.55799E-05	0	8.82168E-10	5.00209E-11	9.32189E-10	0.0009322
3972253768389	397225	3768389	0	0	0	0	0	0	0.000547313	0	0.00043785	0	6.9496E-09	3.94057E-10	7.34365E-09	0.0073437
3972753768389	397275	3768389	0	0	0	0	0	0	0.000539753	0	0.000431803	0	6.8536E-09	3.88614E-10	7.24222E-09	0.0072422
3973253768389	397325	3768389	0	0	0	0	0	0	0.000505135	0	0.000404108	0	6.41404E-09	3.6369E-10	6.77773E-09	0.0067777
3973753768389	397375	3768389	0	0	0	0	0	0	0.000450831	0	0.000360665	0	5.7245E-09	3.24591E-10	6.04909E-09	0.0060491
3974253768389	397425	3768389	0	0	0	0	0	0	0.000392639	0	0.000314111	0	4.9856E-09	2.82694E-10	5.26829E-09	0.0052683
3974753768389	397475	3768389	0	0	0	0	0	0	0.000337654	0	0.000270123	0	4.28741E-09	2.43106E-10	4.53052E-09	0.0045305
3975253768389	397525	3768389	0	0	0	0	0	0	0.000287582	0	0.000230066	0	3.65162E-09	2.07055E-10	3.85868E-09	0.0038587
3964253768439	396425	3768439	0	0	0	0	0	0	5.39205E-05	0	4.31364E-05	0	6.84664E-10	3.8822E-11	7.23486E-10	0.0007235
3964753768439	396475	3768439	0	0	0	0	0	0	5.89667E-05	0	4.71734E-05	0	7.48739E-10	4.24551E-11	7.91194E-10	0.0007912
3965253768439	396525	3768439	0	0	0	0	0	0	6.56194E-05	0	5.24955E-05	0	8.33212E-10	4.72449E-11	8.80457E-10	0.0008805
3971753768439	397175	3768439	0	0	0	0	0	0	0.00039032	0	0.000312256	0	4.95616E-09	2.81025E-10	5.23718E-09	0.0052372
3972253768439	397225	3768439	0	0	0	0	0	0	0.000428157	0	0.000342526	0	5.4366E-09	3.08267E-10	5.74487E-09	0.0057449
3972753768439	397275	3768439	0	0	0	0	0	0	0.000427792	0	0.000342234	0	5.43196E-09	3.08004E-10	5.73996E-09	0.00574
3973253768439	397325	3768439	0	0	0	0	0	0	0.000413227	0	0.000330581	0	5.24701E-09	2.97517E-10	5.54453E-09	0.0055445
3973753768439	397375	3768439	0	0	0	0	0	0	0.000382754	0	0.000306203	0	4.86009E-09	2.75577E-10	5.13566E-09	0.0051357
3974253768439	397425	3768439	0	0	0	0	0	0	0.000344313	0	0.00027545	0	4.37197E-09	2.479E-10	4.61986E-09	0.0046199
3974753768439	397475	3768439	0	0	0	0	0	0	0.00029758	0	0.000238064	0	3.77857E-09	2.14253E-10	3.99283E-09	0.0039928
3975253768439	397525	3768439	0	0	0	0	0	0	0.000258338	0	0.000206671	0	3.28029E-09	1.86E-10	3.46629E-09	0.0034663
3964253768489	396425	3768489	0	0	0	0	0	0	5.12368E-05	0	4.09894E-05	0	6.50587E-10	3.68897E-11	6.87477E-10	0.0006875
3964753768489	396475	3768489	0	0	0	0	0	0	5.59176E-05	0	4.47341E-05	0	7.10022E-10	4.02598E-11	7.50282E-10	0.0007503
3965253768489	396525	3768489	0	0	0	0	0	0	6.20221E-05	0	4.96177E-05	0	7.87536E-10	4.4655E-11	8.32191E-10	0.0008322
3970753768489	397075	3768489	0	0	0	0	0	0	0.000253116	0	0.000202493	0	3.21398E-09	1.8224E-10	3.39622E-09	0.0033962
3971253768489	397125	3768489	0	0	0	0	0	0	0.000282297	0	0.000225837	0	3.58451E-09	2.03249E-10	3.78776E-09	0.0037878
3971753768489	397175	3768489	0	0	0	0	0	0	0.000310886	0	0.000248708	0	3.94752E-09	2.23833E-10	4.17135E-09	0.0041714
3972253768489	397225	3768489	0	0	0	0	0	0	0.000334844	0	0.000267875	0	4.25173E-09	2.41083E-10	4.49282E-09	0.0044928
3972753768489	397275	3768489	0	0	0	0	0	0	0.000346303	0	0.000277043	0	4.39724E-09	2.49333E-10	4.64658E-09	0.0046466
3973253768489	397325	3768489	0	0	0	0	0	0	0.000340911	0	0.000272729	0	4.32877E-09	2.45451E-10	4.57422E-09	0.0045742
3973753768489	397375	3768489	0	0	0	0	0	0	0.000320984	0	0.000256787	0	4.07575E-09	2.31104E-10	4.30685E-09	0.0043069
3974253768489	397425	3768489	0	0	0	0	0	0	0.000294959	0	0.000235968	0	3.7453E-09	2.12366E-10	3.95766E-09	0.0039577
3974753768489	397475	3768489	0	0	0	0	0	0	0.000266446	0	0.000213157	0	3.38325E-09	1.91837E-10	3.57508E-09	0.0035751

Garvey Reservoir Rehab - Mitigated Surge Tank Telemetry			Demolition - 2025	Demolition - 2026	ite Preparation - 202	te Preparation - 202	Grading - 2025	Grading - 2026	nfrastructure - 202	nfrastructure - 202	Paving - 2025	itectural Coating -	Child Risk			
Unique Identifier	X (UTM)	Y (UTM)	1900	1900	1900	1900	1900	1900	2025	1900	2025	1900	3rd Trimester	0<2	Total	per million
3975253768489	397525	3768489	0	0	0	0	0	0	0.000237013	0	0.000189611	0	3.00952E-09	1.70646E-10	3.18016E-09	0.0031802
3964253768539	396425	3768539	0	0	0	0	0	0	4.86916E-05	0	3.89533E-05	0	6.1827E-10	3.50572E-11	6.53327E-10	0.0006533
3964753768539	396475	3768539	0	0	0	0	0	0	5.3133E-05	0	4.25064E-05	0	6.74665E-10	3.8255E-11	7.1292E-10	0.0007129
3965253768539	396525	3768539	0	0	0	0	0	0	5.85446E-05	0	4.68357E-05	0	7.4338E-10	4.21512E-11	7.85531E-10	0.0007855
3965753768539	396575	3768539	0	0	0	0	0	0	6.56257E-05	0	5.25005E-05	0	8.33292E-10	4.72495E-11	8.80542E-10	0.0008805
3970253768539	397025	3768539	0	0	0	0	0	0	0.000189645	0	0.000151716	0	2.40804E-09	1.36541E-10	2.54459E-09	0.0025446
3970753768539	397075	3768539	0	0	0	0	0	0	0.000212375	0	0.0001699	0	2.69666E-09	1.52907E-10	2.84957E-09	0.0028496
3971253768539	397125	3768539	0	0	0	0	0	0	0.000234254	0	0.000187403	0	2.97448E-09	1.68659E-10	3.14314E-09	0.0031431
3971753768539	397175	3768539	0	0	0	0	0	0	0.0002558	0	0.00020464	0	3.24806E-09	1.84172E-10	3.43223E-09	0.0034322
3972253768539	397225	3768539	0	0	0	0	0	0	0.000271549	0	0.000217239	0	3.44804E-09	1.95511E-10	3.64355E-09	0.0036436
3972753768539	397275	3768539	0	0	0	0	0	0	0.00028527	0	0.000228216	0	3.62227E-09	2.0539E-10	3.82766E-09	0.0038277
3973253768539	397325	3768539	0	0	0	0	0	0	0.000283242	0	0.000226593	0	3.59651E-09	2.0393E-10	3.80044E-09	0.0038004
3973753768539	397375	3768539	0	0	0	0	0	0	0.000270787	0	0.00021663	0	3.43836E-09	1.94963E-10	3.63332E-09	0.0036333
3974253768539	397425	3768539	0	0	0	0	0	0	0.000253821	0	0.000203057	0	3.22294E-09	1.82748E-10	3.40569E-09	0.0034057
3974753768539	397475	3768539	0	0	0	0	0	0	0.000233026	0	0.00018642	0	2.95888E-09	1.67775E-10	3.12665E-09	0.0031267
3975253768539	397525	3768539	0	0	0	0	0	0	0.000211039	0	0.000168831	0	2.6797E-09	1.51945E-10	2.83165E-09	0.0028316
3964253768589	396425	3768589	0	0	0	0	0	0	4.64678E-05	0	3.71742E-05	0	5.90032E-10	3.34561E-11	6.23488E-10	0.0006235
3964753768589	396475	3768589	0	0	0	0	0	0	5.04304E-05	0	4.03443E-05	0	6.40348E-10	3.63091E-11	6.76657E-10	0.0006767
3965253768589	396525	3768589	0	0	0	0	0	0	5.5653E-05	0	4.45224E-05	0	7.06663E-10	4.00693E-11	7.46732E-10	0.0007467
3965753768589	396575	3768589	0	0	0	0	0	0	6.16126E-05	0	4.92901E-05	0	7.82336E-10	4.43602E-11	8.26697E-10	0.0008267
3966253768589	396625	3768589	0	0	0	0	0	0	6.84039E-05	0	5.47231E-05	0	8.68569E-10	4.92498E-11	9.17819E-10	0.0009178
3968253768589	396825	3768589	0	0	0	0	0	0	0.000106039	0	8.48314E-05	0	1.34645E-09	7.63467E-11	1.4228E-09	0.0014228
3968753768589	396875	3768589	0	0	0	0	0	0	0.000118979	0	9.51833E-05	0	1.51076E-09	8.56632E-11	1.59642E-09	0.0015964
3969253768589	396925	3768589	0	0	0	0	0	0	0.000131869	0	0.000105495	0	1.67442E-09	9.49435E-11	1.76937E-09	0.0017694
3969753768589	396975	3768589	0	0	0	0	0	0	0.000148349	0	0.000118679	0	1.88369E-09	1.06809E-10	1.9905E-09	0.0019905
3970253768589	397025	3768589	0	0	0	0	0	0	0.000165163	0	0.000132131	0	2.09719E-09	1.18915E-10	2.2161E-09	0.0022161
3970753768589	397075	3768589	0	0	0	0	0	0	0.000180989	0	0.000144791	0	2.29813E-09	1.30309E-10	2.42844E-09	0.0024284
3971253768589	397125	3768589	0	0	0	0	0	0	0.000199271	0	0.000159417	0	2.53027E-09	1.43472E-10	2.67375E-09	0.0026737
3971753768589	397175	3768589	0	0	0	0	0	0	0.000214964	0	0.000171971	0	2.72954E-09	1.54771E-10	2.88431E-09	0.0028843
3972253768589	397225	3768589	0	0	0	0	0	0	0.000225926	0	0.00018074	0	2.86873E-09	1.62663E-10	3.03139E-09	0.0030314
3972753768589	397275	3768589	0	0	0	0	0	0	0.000232024	0	0.000185619	0	2.94616E-09	1.67054E-10	3.11321E-09	0.0031132
3973253768589	397325	3768589	0	0	0	0	0	0	0.000237291	0	0.000189832	0	3.01304E-09	1.70846E-10	3.18388E-09	0.0031839
3973753768589	397375	3768589	0	0	0	0	0	0	0.00022985	0	0.00018388	0	2.91856E-09	1.65489E-10	3.08405E-09	0.0030841
3974253768589	397425	3768589	0	0	0	0	0	0	0.000219569	0	0.000175655	0	2.78801E-09	1.58086E-10	2.9461E-09	0.0029461
3974753768589	397475	3768589	0	0	0	0	0	0	0.000204475	0	0.00016358	0	2.59635E-09	1.47219E-10	2.74357E-09	0.0027436
3975253768589	397525	3768589	0	0	0	0	0	0	0.000187837	0	0.000150269	0	2.38509E-09	1.3524E-10	2.52033E-09	0.0025203
3964253768639	396425	3768639	0	0	0	0	0	0	4.43132E-05	0	3.54506E-05	0	5.62674E-10	3.19049E-11	5.94579E-10	0.0005946
3964753768639	396475	3768639	0	0	0	0	0	0	4.77592E-05	0	3.82074E-05	0	6.06431E-10	3.43859E-11	6.40817E-10	0.0006408
3965253768639	396525	3768639	0	0	0	0	0	0	5.26668E-05	0	4.21335E-05	0	6.68746E-10	3.79193E-11	7.06665E-10	0.0007067
3965753768639	396575	3768639	0	0	0	0	0	0	5.78138E-05	0	4.62511E-05	0	7.341E-10	4.16251E-11	7.75725E-10	0.0007757
3966253768639	396625	3768639	0	0	0	0	0	0	6.36727E-05	0	5.09382E-05	0	8.08494E-10	4.58434E-11	8.54338E-10	0.0008543
3966753768639	396675	3768639	0	0	0	0	0	0	7.03946E-05	0	5.63157E-05	0	8.93847E-10	5.06831E-11	9.44531E-10	0.0009445
3967253768639	396725	3768639	0	0	0	0	0	0	7.79986E-05	0	6.23989E-05	0	9.904E-10	5.61578E-11	1.04656E-09	0.0010466
3967753768639	396775	3768639	0	0	0	0	0	0	8.63396E-05	0	6.90717E-05	0	1.09631E-09	6.21632E-11	1.15847E-09	0.0011585
3968253768639	396825	3768639	0	0	0	0	0	0	9.58587E-05	0	7.66869E-05	0	1.21718E-09	6.90168E-11	1.2862E-09	0.0012862
3968753768639	396875	3768639	0	0	0	0	0	0	0.000105989	0	8.47911E-05	0	1.34581E-09	7.63104E-11	1.42212E-09	0.0014221
3969253768639	396925	3768639	0	0	0	0	0	0	0.000116988	0	9.35907E-05	0	1.48548E-09	8.42299E-11	1.56971E-09	0.0015697
3969753768639	396975	3768639	0	0	0	0	0	0	0.000129739	0	0.000103791	0	1.64739E-09	9.34104E-11	1.7408E-09	0.0017408
3970253768639	397025	3768639	0	0	0	0	0	0	0.000142786	0	0.000114229	0	1.81305E-09	1.02804E-10	1.91586E-09	0.0019159
3970753768639	397075	3768639	0	0	0	0	0	0	0.000155052	0	0.000124042	0	1.9688E-09	1.11635E-10	2.08044E-09	0.0020804
3971253768639	397125	3768639	0	0	0	0	0	0	0.000165623	0	0.000132499	0	2.10303E-09	1.19246E-10	2.22228E-09	0.0022223
3971753768639	397175	3768639	0	0	0	0	0	0	0.000180806	0	0.000144645	0	2.29581E-09	1.30178E-10	2.42599E-09	0.002426
3972253768639	397225	3768639	0	0	0	0	0	0	0.000190703	0	0.000152562	0	2.42148E-09	1.37303E-10	2.55879E-09	0.0025588
3972753768639	397275	3768639	0	0	0	0	0	0	0.000197444	0	0.000157955	0	2.50708E-09	1.42157E-10	2.64923E-09	0.0026492
3973253768639	397325	3768639	0	0	0	0	0	0	0.000200606	0	0.000160485	0	2.54723E-09	1.44434E-10	2.69167E-09	0.0026917
3973753768639	397375	3768639	0	0	0	0	0	0	0.00019643	0	0.000157144	0	2.4942E-09	1.41426E-10	2.63562E-09	0.0026356
3974253768639	397425	3768639	0	0	0	0	0	0	0.000189399	0	0.000151519	0	2.40492E-09	1.36364E-10	2.54129E-09	0.0025413
3974753768639	397475	3768639	0	0	0	0	0	0	0.000180126	0	0.000144101	0	2.28717E-09	1.29688E-10	2.41686E-09	0.0024169
3975253768639	397525	3768639	0	0	0	0	0	0	0.00016752	0	0.000134016	0	2.12711E-09	1.20612E-10	2.24772E-09	0.0022477
3964253768689	396425	3768689	0	0	0	0	0	0	4.22091E-05	0	3.37673E-05	0	5.35956E-10	3.03899E-11	5.66346E-10	0.0005663
3964753768689	396475	3768689	0	0	0	0	0	0	4.5233E-05	0	3.61864E-05	0	5.74353E-10	3.25671E-11	6.0692E-10	0.0006069
3965253768689	396525	3768689	0	0	0	0	0	0	4.91956E-05	0	3.93565E-05	0	6.24669E-10	3.54201E-11	6.60089E-10	0.0006601
3965753768689	396575	3768689	0	0	0	0	0	0	5.39394E-05	0	4.31515E-05	0	6.84904E-10	3.88356E-11	7.2374E-10	0.0007237
3966253768689	396625	3768689	0	0	0	0	0	0	5.89415E-05	0	4.71532E-05	0	7.48419E-10	4.2437E-11	7.90856E-10	0.0007909
3966753768689	396675	3768689	0	0	0	0	0	0	6.47752E-05	0	5.18201E-05	0	8.22493E-10	4.66372E-11	8.6913E-10	0.0008691
3967253768689	396725	3768689	0	0	0	0	0	0	7.09742E-05	0	5.67794E-05	0	9.01207E-10	5.11004E-11	9.52307E-10	0.0009523
3967753768689	396775	3768689	0	0	0	0	0	0	7.79797E-05	0	6.23837E-05	0	9.9016E-10	5.61442E-11	1.0463E-09	0.0010463
3968253768689	396825	3768689	0	0	0	0	0	0	8.5697E-05	0	6.85576E-05	0	1.08815E-09	6.17006E-11	1.14985E-09	0.0011499
3968753768689	396875	3768689	0	0	0	0	0	0	9.43467E-05	0	7.54774E-05	0	1.19798E-09	6.79282E-11	1.26591E-09	0.0012659

Garvey Reservoir Rehab - Mitigated Surge Tank Telemetry			Demolition - 2025	Demolition - 2026	ite Preparation - 202	te Preparation - 202	Grading - 2025	Grading - 2026	nfrastructure - 202	nfrastructure - 202	Paving - 2025	itectural Coating -	Child Risk			
Unique Identifier	X (UTM)	Y (UTM)	1900	1900	1900	1900	1900	1900	2025	1900	2025	1900	3rd Trimester	0<2	Total	per million
3969253768689	396925	3768689	0	0	0	0	0	0	0.000103437	0	8.27499E-05	0	1.31341E-09	7.44734E-11	1.38789E-09	0.0013879
3969753768689	396975	3768689	0	0	0	0	0	0	0.00011329	0	9.06323E-05	0	1.43852E-09	8.15674E-11	1.52009E-09	0.0015201
3970253768689	397025	3768689	0	0	0	0	0	0	0.000123893	0	9.91145E-05	0	1.57315E-09	8.92011E-11	1.66235E-09	0.0016624
3970753768689	397075	3768689	0	0	0	0	0	0	0.000135069	0	0.000108055	0	1.71506E-09	9.72477E-11	1.81231E-09	0.0018123
3971253768689	397125	3768689	0	0	0	0	0	0	0.000142887	0	0.00011431	0	1.81433E-09	1.02877E-10	1.91721E-09	0.0019172
3971753768689	397175	3768689	0	0	0	0	0	0	0.000154454	0	0.000123563	0	1.9612E-09	1.11204E-10	2.07241E-09	0.0020724
3972253768689	397225	3768689	0	0	0	0	0	0	0.000163664	0	0.000130931	0	2.07815E-09	1.17836E-10	2.19599E-09	0.002196
3972753768689	397275	3768689	0	0	0	0	0	0	0.000169101	0	0.000135281	0	2.14719E-09	1.2175E-10	2.26894E-09	0.0022689
3973253768689	397325	3768689	0	0	0	0	0	0	0.000171678	0	0.000137342	0	2.1799E-09	1.23605E-10	2.30351E-09	0.0023035
3973753768689	397375	3768689	0	0	0	0	0	0	0.000170531	0	0.000136425	0	2.16534E-09	1.2278E-10	2.28812E-09	0.0022881
3974253768689	397425	3768689	0	0	0	0	0	0	0.000165548	0	0.000132438	0	2.10207E-09	1.19192E-10	2.22126E-09	0.0022213
3974753768689	397475	3768689	0	0	0	0	0	0	0.000158114	0	0.000126491	0	2.00768E-09	1.1384E-10	2.12152E-09	0.0021215
3975253768689	397525	3768689	0	0	0	0	0	0	0.000148948	0	0.000119158	0	1.89129E-09	1.0724E-10	1.99853E-09	0.0019985

Garvey Reservoir Rehab - Mitigated Surge Tank Telemetry

Offroad DPM Emissions, Ground Level Concentrations and Health Risk Calculations

Residential Receptors

Phase	Year	Emissions (lbs/day)	Meters	lbs/meter	meters (h1)	lbs/day (H1)	g/s (H1)	meters (h2)	lbs/day (H2)	g/s (H2)	hrs/day
Demolition - 2025	1900		1932.1	0	691.2	0	0	1240.9	0	0	10.00
Demolition - 2026	1900		1932.1	0	691.2	0	0	1240.9	0	0	10.00
Site Preparation - 2025	1900		1932.1	0	691.2	0	0	1240.9	0	0	10.00
Site Preparation - 2026	1900		1932.1	0	691.2	0	0	1240.9	0	0	10.00
Grading - 2025	1900		1932.1	0	691.2	0	0	1240.9	0	0	10.00
Grading - 2026	1900		1932.1	0	691.2	0	0	1240.9	0	0	10.00
Infrastructure - 2025	2025	0.0001	1932.1	6.52126E-08	691.2	4.50749E-05	5.67932E-07	1240.9	8.09223E-05	1.0196E-06	10.00
Infrastructure - 2026	1900		1932.1	0	691.2	0	0	1240.9	0	0	10.00
Paving - 2025	2025	0.0000	1932.1	0	691.2	0	0	1240.9	0	0	10.00
Architectural Coating - 2026	1900		1932.1	0	691.2	0	0	1240.9	0	0	10.00

		AERMOD Column Identifier:	*5*	*5*	*5*	*5*	*5*	*5*	*5*	*5*	*5*	*5*				
			6	*6*	*6*	*6*	*6*	*6*	*6*	*6*	*6*	*6*			*MAX:*	0.000119
Garvey Reservoir Rehab - Mitigated Surge Tank Telemetry			Demolition - 2025	Demolition - 2026	Site Preparation - 2025	te Preparation - 202	Grading - 2025	Grading - 2026	Infrastructure - 2025	nfrastructure - 2026	Paving - 2025	rchitectural Coating - 202	Child Risk			
Unique Identifier	X (UTM)	Y (UTM)	1900	1900	1900	1900	1900	1900	2025	1900	2025	1900	3rd Trimester	0<2	Total	per million
396166.283767377.2	396166.28	3767377	0	0	0	0	0	0	4.82584E-08	0	0	0	4.45911E-13	0	4.45911E-13	4.459E-07
396266.283767377.2	396266.28	3767377	0	0	0	0	0	0	4.93524E-08	0	0	0	4.5602E-13	0	4.5602E-13	4.56E-07
396366.283767377.2	396366.28	3767377	0	0	0	0	0	0	5.13596E-08	0	0	0	4.74567E-13	0	4.74567E-13	4.746E-07
396466.283767377.2	396466.28	3767377	0	0	0	0	0	0	5.26977E-08	0	0	0	4.86932E-13	0	4.86932E-13	4.869E-07
396566.283767377.2	396566.28	3767377	0	0	0	0	0	0	5.77712E-08	0	0	0	5.3381E-13	0	5.3381E-13	5.338E-07
396666.283767377.2	396666.28	3767377	0	0	0	0	0	0	5.46195E-08	0	0	0	5.04688E-13	0	5.04688E-13	5.047E-07
396766.283767377.2	396766.28	3767377	0	0	0	0	0	0	5.44053E-08	0	0	0	5.02709E-13	0	5.02709E-13	5.027E-07
396866.283767377.2	396866.28	3767377	0	0	0	0	0	0	5.44529E-08	0	0	0	5.03149E-13	0	5.03149E-13	5.031E-07
396966.283767377.2	396966.28	3767377	0	0	0	0	0	0	5.51734E-08	0	0	0	5.09807E-13	0	5.09807E-13	5.098E-07
397066.283767377.2	397066.28	3767377	0	0	0	0	0	0	5.3782E-08	0	0	0	4.9695E-13	0	4.9695E-13	4.97E-07
397166.283767377.2	397166.28	3767377	0	0	0	0	0	0	5.30464E-08	0	0	0	4.90153E-13	0	4.90153E-13	4.902E-07
397266.283767377.2	397266.28	3767377	0	0	0	0	0	0	5.31104E-08	0	0	0	4.90744E-13	0	4.90744E-13	4.907E-07
397366.283767377.2	397366.28	3767377	0	0	0	0	0	0	5.06893E-08	0	0	0	4.68374E-13	0	4.68374E-13	4.684E-07
397466.283767377.2	397466.28	3767377	0	0	0	0	0	0	4.56335E-08	0	0	0	4.21658E-13	0	4.21658E-13	4.217E-07
397566.283767377.2	397566.28	3767377	0	0	0	0	0	0	4.48866E-08	0	0	0	4.14756E-13	0	4.14756E-13	4.148E-07
397666.283767377.2	397666.28	3767377	0	0	0	0	0	0	4.3569E-08	0	0	0	4.02581E-13	0	4.02581E-13	4.026E-07
397766.283767377.2	397766.28	3767377	0	0	0	0	0	0	4.49648E-08	0	0	0	4.15479E-13	0	4.15479E-13	4.155E-07
397866.283767377.2	397866.28	3767377	0	0	0	0	0	0	4.28292E-08	0	0	0	3.95745E-13	0	3.95745E-13	3.957E-07
396166.283767477.2	396166.28	3767477	0	0	0	0	0	0	5.55344E-08	0	0	0	5.13143E-13	0	5.13143E-13	5.131E-07
396266.283767477.2	396266.28	3767477	0	0	0	0	0	0	5.4263E-08	0	0	0	5.01395E-13	0	5.01395E-13	5.014E-07
396366.283767477.2	396366.28	3767477	0	0	0	0	0	0	5.71677E-08	0	0	0	5.28234E-13	0	5.28234E-13	5.282E-07
396466.283767477.2	396466.28	3767477	0	0	0	0	0	0	6.26129E-08	0	0	0	5.78549E-13	0	5.78549E-13	5.785E-07
396566.283767477.2	396566.28	3767477	0	0	0	0	0	0	6.34637E-08	0	0	0	5.8641E-13	0	5.8641E-13	5.864E-07
396666.283767477.2	396666.28	3767477	0	0	0	0	0	0	6.1621E-08	0	0	0	5.69383E-13	0	5.69383E-13	5.694E-07
396766.283767477.2	396766.28	3767477	0	0	0	0	0	0	6.2103E-08	0	0	0	5.73837E-13	0	5.73837E-13	5.738E-07
396866.283767477.2	396866.28	3767477	0	0	0	0	0	0	6.24656E-08	0	0	0	5.77187E-13	0	5.77187E-13	5.772E-07
396966.283767477.2	396966.28	3767477	0	0	0	0	0	0	6.33955E-08	0	0	0	5.8578E-13	0	5.8578E-13	5.858E-07
397066.283767477.2	397066.28	3767477	0	0	0	0	0	0	6.21772E-08	0	0	0	5.74522E-13	0	5.74522E-13	5.745E-07
397166.283767477.2	397166.28	3767477	0	0	0	0	0	0	6.02189E-08	0	0	0	5.56428E-13	0	5.56428E-13	5.564E-07
397266.283767477.2	397266.28	3767477	0	0	0	0	0	0	6.04179E-08	0	0	0	5.58266E-13	0	5.58266E-13	5.583E-07
397366.283767477.2	397366.28	3767477	0	0	0	0	0	0	5.86004E-08	0	0	0	5.41472E-13	0	5.41472E-13	5.415E-07
397466.283767477.2	397466.28	3767477	0	0	0	0	0	0	5.28551E-08	0	0	0	4.88385E-13	0	4.88385E-13	4.884E-07
397566.283767477.2	397566.28	3767477	0	0	0	0	0	0	5.01255E-08	0	0	0	4.63164E-13	0	4.63164E-13	4.632E-07
397666.283767477.2	397666.28	3767477	0	0	0	0	0	0	4.90262E-08	0	0	0	4.53006E-13	0	4.53006E-13	4.53E-07
397766.283767477.2	397766.28	3767477	0	0	0	0	0	0	4.78618E-08	0	0	0	4.42247E-13	0	4.42247E-13	4.422E-07
397866.283767477.2	397866.28	3767477	0	0	0	0	0	0	4.60623E-08	0	0	0	4.25619E-13	0	4.25619E-13	4.256E-07
396166.283767577.2	396166.28	3767577	0	0	0	0	0	0	5.85404E-08	0	0	0	5.40918E-13	0	5.40918E-13	5.409E-07
396266.283767577.2	396266.28	3767577	0	0	0	0	0	0	6.01789E-08	0	0	0	5.56058E-13	0	5.56058E-13	5.561E-07
396366.283767577.2	396366.28	3767577	0	0	0	0	0	0	6.29392E-08	0	0	0	5.81563E-13	0	5.81563E-13	5.816E-07
396466.283767577.2	396466.28	3767577	0	0	0	0	0	0	6.68318E-08	0	0	0	6.17532E-13	0	6.17532E-13	6.175E-07
396566.283767577.2	396566.28	3767577	0	0	0	0	0	0	7.42387E-08	0	0	0	6.85972E-13	0	6.85972E-13	6.86E-07
396666.283767577.2	396666.28	3767577	0	0	0	0	0	0	7.53816E-08	0	0	0	6.96532E-13	0	6.96532E-13	6.965E-07
396766.283767577.2	396766.28	3767577	0	0	0	0	0	0	7.10828E-08	0	0	0	6.56811E-13	0	6.56811E-13	6.568E-07
396866.283767577.2	396866.28	3767577	0	0	0	0	0	0	7.2875E-08	0	0	0	6.73371E-13	0	6.73371E-13	6.734E-07

Garvey Reservoir Rehab - Mitigated Surge Tank Telemetry			Demolition - 2025	Demolition - 2026	Site Preparation - 2025	te Preparation - 202	Grading - 2025	Grading - 2026	Infrastructure - 2025	nfrastructure - 2026	Paving - 2025	rchitectural Coating - 202	Child Risk			
Unique Identifier	X (UTM)	Y (UTM)	1900	1900	1900	1900	1900	1900	2025	1900	2025	1900	3rd Trimester	0<2	Total	per million
396966.283767577.2	396966.28	3767577	0	0	0	0	0	0	7.38717E-08	0	0	0	6.8258E-13	0	6.8258E-13	6.826E-07
397066.283767577.2	397066.28	3767577	0	0	0	0	0	0	7.38894E-08	0	0	0	6.82745E-13	0	6.82745E-13	6.827E-07
397166.283767577.2	397166.28	3767577	0	0	0	0	0	0	7.11631E-08	0	0	0	6.57553E-13	0	6.57553E-13	6.576E-07
397266.283767577.2	397266.28	3767577	0	0	0	0	0	0	7.02197E-08	0	0	0	6.48835E-13	0	6.48835E-13	6.488E-07
397366.283767577.2	397366.28	3767577	0	0	0	0	0	0	6.84696E-08	0	0	0	6.32665E-13	0	6.32665E-13	6.327E-07
397466.283767577.2	397466.28	3767577	0	0	0	0	0	0	6.09922E-08	0	0	0	5.63573E-13	0	5.63573E-13	5.636E-07
397566.283767577.2	397566.28	3767577	0	0	0	0	0	0	5.75304E-08	0	0	0	5.31586E-13	0	5.31586E-13	5.316E-07
397666.283767577.2	397666.28	3767577	0	0	0	0	0	0	5.44013E-08	0	0	0	5.02673E-13	0	5.02673E-13	5.027E-07
397766.283767577.2	397766.28	3767577	0	0	0	0	0	0	5.23333E-08	0	0	0	4.83564E-13	0	4.83564E-13	4.836E-07
397866.283767577.2	397866.28	3767577	0	0	0	0	0	0	4.97493E-08	0	0	0	4.59687E-13	0	4.59687E-13	4.597E-07
396166.283767677.2	396166.28	3767677	0	0	0	0	0	0	7.08796E-08	0	0	0	6.54933E-13	0	6.54933E-13	6.549E-07
396266.283767677.2	396266.28	3767677	0	0	0	0	0	0	6.70624E-08	0	0	0	6.19662E-13	0	6.19662E-13	6.197E-07
396366.283767677.2	396366.28	3767677	0	0	0	0	0	0	7.14612E-08	0	0	0	6.60307E-13	0	6.60307E-13	6.603E-07
396466.283767677.2	396466.28	3767677	0	0	0	0	0	0	8.45253E-08	0	0	0	7.81021E-13	0	7.81021E-13	7.81E-07
396566.283767677.2	396566.28	3767677	0	0	0	0	0	0	8.5292E-08	0	0	0	7.88105E-13	0	7.88105E-13	7.881E-07
396666.283767677.2	396666.28	3767677	0	0	0	0	0	0	7.98975E-08	0	0	0	7.3826E-13	0	7.3826E-13	7.383E-07
396766.283767677.2	396766.28	3767677	0	0	0	0	0	0	8.31757E-08	0	0	0	7.6855E-13	0	7.6855E-13	7.686E-07
396866.283767677.2	396866.28	3767677	0	0	0	0	0	0	8.78496E-08	0	0	0	8.11738E-13	0	8.11738E-13	8.117E-07
396966.283767677.2	396966.28	3767677	0	0	0	0	0	0	8.88059E-08	0	0	0	8.20574E-13	0	8.20574E-13	8.206E-07
397066.283767677.2	397066.28	3767677	0	0	0	0	0	0	8.85386E-08	0	0	0	8.18104E-13	0	8.18104E-13	8.181E-07
397166.283767677.2	397166.28	3767677	0	0	0	0	0	0	8.65801E-08	0	0	0	8.00008E-13	0	8.00008E-13	8E-07
397266.283767677.2	397266.28	3767677	0	0	0	0	0	0	7.93981E-08	0	0	0	7.33645E-13	0	7.33645E-13	7.336E-07
397366.283767677.2	397366.28	3767677	0	0	0	0	0	0	8.07646E-08	0	0	0	7.46272E-13	0	7.46272E-13	7.463E-07
397466.283767677.2	397466.28	3767677	0	0	0	0	0	0	6.9462E-08	0	0	0	6.41834E-13	0	6.41834E-13	6.418E-07
397566.283767677.2	397566.28	3767677	0	0	0	0	0	0	6.66442E-08	0	0	0	6.15798E-13	0	6.15798E-13	6.158E-07
397666.283767677.2	397666.28	3767677	0	0	0	0	0	0	6.27614E-08	0	0	0	5.7992E-13	0	5.7992E-13	5.799E-07
397766.283767677.2	397766.28	3767677	0	0	0	0	0	0	5.85869E-08	0	0	0	5.41348E-13	0	5.41348E-13	5.413E-07
397866.283767677.2	397866.28	3767677	0	0	0	0	0	0	5.5754E-08	0	0	0	5.15171E-13	0	5.15171E-13	5.152E-07
396166.283767777.2	396166.28	3767777	0	0	0	0	0	0	7.9549E-08	0	0	0	7.35039E-13	0	7.35039E-13	7.35E-07
396266.283767777.2	396266.28	3767777	0	0	0	0	0	0	9.03676E-08	0	0	0	8.35004E-13	0	8.35004E-13	8.35E-07
396366.283767777.2	396366.28	3767777	0	0	0	0	0	0	8.79503E-08	0	0	0	8.12668E-13	0	8.12668E-13	8.127E-07
396466.283767777.2	396466.28	3767777	0	0	0	0	0	0	9.28522E-08	0	0	0	8.57962E-13	0	8.57962E-13	8.58E-07
396566.283767777.2	396566.28	3767777	0	0	0	0	0	0	8.79114E-08	0	0	0	8.12308E-13	0	8.12308E-13	8.123E-07
396666.283767777.2	396666.28	3767777	0	0	0	0	0	0	9.2456E-08	0	0	0	8.54301E-13	0	8.54301E-13	8.543E-07
396766.283767777.2	396766.28	3767777	0	0	0	0	0	0	1.0134E-07	0	0	0	9.36394E-13	0	9.36394E-13	9.364E-07
396866.283767777.2	396866.28	3767777	0	0	0	0	0	0	1.08223E-07	0	0	0	9.99992E-13	0	9.99992E-13	1E-06
396966.283767777.2	396966.28	3767777	0	0	0	0	0	0	1.06896E-07	0	0	0	9.87732E-13	0	9.87732E-13	9.877E-07
397066.283767777.2	397066.28	3767777	0	0	0	0	0	0	1.07043E-07	0	0	0	9.89087E-13	0	9.89087E-13	9.891E-07
397166.283767777.2	397166.28	3767777	0	0	0	0	0	0	1.07189E-07	0	0	0	9.90438E-13	0	9.90438E-13	9.904E-07
397266.283767777.2	397266.28	3767777	0	0	0	0	0	0	9.97286E-08	0	0	0	9.21501E-13	0	9.21501E-13	9.215E-07
397366.283767777.2	397366.28	3767777	0	0	0	0	0	0	9.77948E-08	0	0	0	9.03632E-13	0	9.03632E-13	9.036E-07
397466.283767777.2	397466.28	3767777	0	0	0	0	0	0	8.4394E-08	0	0	0	7.79807E-13	0	7.79807E-13	7.798E-07
397566.283767777.2	397566.28	3767777	0	0	0	0	0	0	7.78492E-08	0	0	0	7.19333E-13	0	7.19333E-13	7.193E-07
397666.283767777.2	397666.28	3767777	0	0	0	0	0	0	7.40874E-08	0	0	0	6.84574E-13	0	6.84574E-13	6.846E-07
397766.283767777.2	397766.28	3767777	0	0	0	0	0	0	6.61501E-08	0	0	0	6.11232E-13	0	6.11232E-13	6.112E-07
397866.283767777.2	397866.28	3767777	0	0	0	0	0	0	6.03086E-08	0	0	0	5.57257E-13	0	5.57257E-13	5.573E-07
396166.283767877.2	396166.28	3767877	0	0	0	0	0	0	8.7916E-08	0	0	0	8.12351E-13	0	8.12351E-13	8.124E-07
396266.283767877.2	396266.28	3767877	0	0	0	0	0	0	1.01545E-07	0	0	0	9.3828E-13	0	9.3828E-13	9.383E-07
396366.283767877.2	396366.28	3767877	0	0	0	0	0	0	1.07341E-07	0	0	0	9.91838E-13	0	9.91838E-13	9.918E-07
396466.283767877.2	396466.28	3767877	0	0	0	0	0	0	1.01855E-07	0	0	0	9.41153E-13	0	9.41153E-13	9.412E-07
396566.283767877.2	396566.28	3767877	0	0	0	0	0	0	1.0081E-07	0	0	0	9.31497E-13	0	9.31497E-13	9.315E-07
397466.283767877.2	397466.28	3767877	0	0	0	0	0	0	1.18192E-07	0	0	0	1.09211E-12	0	1.09211E-12	1.092E-06
397566.283767877.2	397566.28	3767877	0	0	0	0	0	0	9.30936E-08	0	0	0	8.60192E-13	0	8.60192E-13	8.602E-07
397666.283767877.2	397666.28	3767877	0	0	0	0	0	0	7.84755E-08	0	0	0	7.2512E-13	0	7.2512E-13	7.251E-07
397766.283767877.2	397766.28	3767877	0	0	0	0	0	0	6.9464E-08	0	0	0	6.41853E-13	0	6.41853E-13	6.419E-07
397866.283767877.2	397866.28	3767877	0	0	0	0	0	0	6.95791E-08	0	0	0	6.42917E-13	0	6.42917E-13	6.429E-07
396166.283767977.2	396166.28	3767977	0	0	0	0	0	0	9.21507E-08	0	0	0	8.5148E-13	0	8.5148E-13	8.515E-07
396266.283767977.2	396266.28	3767977	0	0	0	0	0	0	1.0649E-07	0	0	0	9.83972E-13	0	9.83972E-13	9.84E-07
396366.283767977.2	396366.28	3767977	0	0	0	0	0	0	1.1518E-07	0	0	0	1.06427E-12	0	1.06427E-12	1.064E-06
396466.283767977.2	396466.28	3767977	0	0	0	0	0	0	1.10665E-07	0	0	0	1.02255E-12	0	1.02255E-12	1.023E-06
397466.283767977.2	397466.28	3767977	0	0	0	0	0	0	1.39392E-07	0	0	0	1.288E-12	0	1.288E-12	1.288E-06
397566.283767977.2	397566.28	3767977	0	0	0	0	0	0	1.12568E-07	0	0	0	1.04014E-12	0	1.04014E-12	1.04E-06
397666.283767977.2	397666.28	3767977	0	0	0	0	0	0	9.34362E-08	0	0	0	8.63358E-13	0	8.63358E-13	8.634E-07
397766.283767977.2	397766.28	3767977	0	0	0	0	0	0	9.41203E-08	0	0	0	8.69679E-13	0	8.69679E-13	8.697E-07
397866.283767977.2	397866.28	3767977	0	0	0	0	0	0	8.60711E-08	0	0	0	7.95304E-13	0	7.95304E-13	7.953E-07
396166.283768077.2	396166.28	3768077	0	0	0	0	0	0	1.24227E-07	0	0	0	1.14787E-12	0	1.14787E-12	1.148E-06
396266.283768077.2	396266.28	3768077	0	0	0	0	0	0	1.17734E-07	0	0	0	1.08787E-12	0	1.08787E-12	1.088E-06
396366.283768077.2	396366.28	3768077	0	0	0	0	0	0	1.27762E-07	0	0	0	1.18053E-12	0	1.18053E-12	1.181E-06
396466.283768077.2	396466.28	3768077	0	0	0	0	0	0	1.38306E-07	0	0	0	1.27796E-12	0	1.27796E-12	1.278E-06
397466.283768077.2	397466.28	3768077	0	0	0	0	0	0	2.41898E-07	0	0	0	2.23516E-12	0	2.23516E-12	2.235E-06
397566.283768077.2	397566.28	3768077	0	0	0	0	0	0	1.91162E-07	0	0	0	1.76636E-12	0	1.76636E-12	1.766E-06

Garvey Reservoir Rehab - Mitigated Surge Tank Telemetry			Demolition - 2025	Demolition - 2026	Site Preparation - 2025	te Preparation - 202	Grading - 2025	Grading - 2026	Infrastructure - 2025	nfrastructure - 2026	Paving - 2025	rchitectural Coating - 202	Child Risk			
Unique Identifier	X (UTM)	Y (UTM)	1900	1900	1900	1900	1900	1900	2025	1900	2025	1900	3rd Trimester	0<2	Total	per million
397666.283768077.2	397666.28	3768077	0	0	0	0	0	0	1.43419E-07	0	0	0	1.3252E-12	0	1.3252E-12	1.325E-06
397766.283768077.2	397766.28	3768077	0	0	0	0	0	0	1.1198E-07	0	0	0	1.03471E-12	0	1.03471E-12	1.035E-06
397866.283768077.2	397866.28	3768077	0	0	0	0	0	0	9.70612E-08	0	0	0	8.96853E-13	0	8.96853E-13	8.969E-07
396166.283768177.2	396166.28	3768177	0	0	0	0	0	0	1.49824E-07	0	0	0	1.38439E-12	0	1.38439E-12	1.384E-06
396266.283768177.2	396266.28	3768177	0	0	0	0	0	0	1.54745E-07	0	0	0	1.42986E-12	0	1.42986E-12	1.43E-06
396366.283768177.2	396366.28	3768177	0	0	0	0	0	0	1.68458E-07	0	0	0	1.55657E-12	0	1.55657E-12	1.557E-06
396466.283768177.2	396466.28	3768177	0	0	0	0	0	0	1.65874E-07	0	0	0	1.53269E-12	0	1.53269E-12	1.533E-06
397466.283768177.2	397466.28	3768177	0	0	0	0	0	0	5.29026E-07	0	0	0	4.88824E-12	0	4.88824E-12	4.888E-06
397566.283768177.2	397566.28	3768177	0	0	0	0	0	0	2.77513E-07	0	0	0	2.56424E-12	0	2.56424E-12	2.564E-06
397666.283768177.2	397666.28	3768177	0	0	0	0	0	0	1.89379E-07	0	0	0	1.74988E-12	0	1.74988E-12	1.75E-06
397766.283768177.2	397766.28	3768177	0	0	0	0	0	0	1.39652E-07	0	0	0	1.2904E-12	0	1.2904E-12	1.29E-06
397866.283768177.2	397866.28	3768177	0	0	0	0	0	0	1.1459E-07	0	0	0	1.05882E-12	0	1.05882E-12	1.059E-06
396166.283768277.2	396166.28	3768277	0	0	0	0	0	0	1.7819E-07	0	0	0	1.64649E-12	0	1.64649E-12	1.646E-06
396266.283768277.2	396266.28	3768277	0	0	0	0	0	0	1.75353E-07	0	0	0	1.62027E-12	0	1.62027E-12	1.62E-06
396366.283768277.2	396366.28	3768277	0	0	0	0	0	0	1.96843E-07	0	0	0	1.81884E-12	0	1.81884E-12	1.819E-06
396466.283768277.2	396466.28	3768277	0	0	0	0	0	0	2.03696E-07	0	0	0	1.88217E-12	0	1.88217E-12	1.882E-06
397366.283768277.2	397366.28	3768277	0	0	0	0	0	0	4.20457E-06	0	0	0	3.88506E-11	0	3.88506E-11	3.885E-05
397466.283768277.2	397466.28	3768277	0	0	0	0	0	0	8.25359E-07	0	0	0	7.62638E-12	0	7.62638E-12	7.626E-06
397566.283768277.2	397566.28	3768277	0	0	0	0	0	0	3.76802E-07	0	0	0	3.48168E-12	0	3.48168E-12	3.482E-06
397666.283768277.2	397666.28	3768277	0	0	0	0	0	0	2.36098E-07	0	0	0	2.18157E-12	0	2.18157E-12	2.182E-06
397766.283768277.2	397766.28	3768277	0	0	0	0	0	0	1.69126E-07	0	0	0	1.56274E-12	0	1.56274E-12	1.563E-06
397866.283768277.2	397866.28	3768277	0	0	0	0	0	0	1.30201E-07	0	0	0	1.20307E-12	0	1.20307E-12	1.203E-06
396166.283768377.2	396166.28	3768377	0	0	0	0	0	0	2.09999E-07	0	0	0	1.94041E-12	0	1.94041E-12	1.94E-06
396266.283768377.2	396266.28	3768377	0	0	0	0	0	0	2.18663E-07	0	0	0	2.02047E-12	0	2.02047E-12	2.02E-06
396366.283768377.2	396366.28	3768377	0	0	0	0	0	0	2.44136E-07	0	0	0	2.25584E-12	0	2.25584E-12	2.256E-06
396466.283768377.2	396466.28	3768377	0	0	0	0	0	0	2.63395E-07	0	0	0	2.43379E-12	0	2.43379E-12	2.434E-06
397266.283768377.2	397266.28	3768377	0	0	0	0	0	0	6.60068E-06	0	0	0	6.09908E-11	0	6.09908E-11	6.099E-05
397366.283768377.2	397366.28	3768377	0	0	0	0	0	0	2.96878E-06	0	0	0	2.74318E-11	0	2.74318E-11	2.743E-05
397466.283768377.2	397466.28	3768377	0	0	0	0	0	0	9.57957E-07	0	0	0	8.8516E-12	0	8.8516E-12	8.852E-06
397566.283768377.2	397566.28	3768377	0	0	0	0	0	0	4.59895E-07	0	0	0	4.24947E-12	0	4.24947E-12	4.249E-06
397666.283768377.2	397666.28	3768377	0	0	0	0	0	0	2.78761E-07	0	0	0	2.57578E-12	0	2.57578E-12	2.576E-06
397766.283768377.2	397766.28	3768377	0	0	0	0	0	0	1.95974E-07	0	0	0	1.81081E-12	0	1.81081E-12	1.811E-06
397866.283768377.2	397866.28	3768377	0	0	0	0	0	0	1.40971E-07	0	0	0	1.30258E-12	0	1.30258E-12	1.303E-06
396166.283768477.2	396166.28	3768477	0	0	0	0	0	0	2.57641E-07	0	0	0	2.38062E-12	0	2.38062E-12	2.381E-06
396266.283768477.2	396266.28	3768477	0	0	0	0	0	0	2.77657E-07	0	0	0	2.56557E-12	0	2.56557E-12	2.566E-06
396366.283768477.2	396366.28	3768477	0	0	0	0	0	0	3.07757E-07	0	0	0	2.8437E-12	0	2.8437E-12	2.844E-06
396466.283768477.2	396466.28	3768477	0	0	0	0	0	0	3.44617E-07	0	0	0	3.18429E-12	0	3.18429E-12	3.184E-06
397166.283768477.2	397166.28	3768477	0	0	0	0	0	0	1.2268E-06	0	0	0	1.13357E-11	0	1.13357E-11	1.134E-05
397266.283768477.2	397266.28	3768477	0	0	0	0	0	0	6.70005E-06	0	0	0	6.1909E-11	0	6.1909E-11	6.191E-05
397366.283768477.2	397366.28	3768477	0	0	0	0	0	0	2.7145E-06	0	0	0	2.50822E-11	0	2.50822E-11	2.508E-05
397466.283768477.2	397466.28	3768477	0	0	0	0	0	0	8.8282E-07	0	0	0	8.15733E-12	0	8.15733E-12	8.157E-06
397566.283768477.2	397566.28	3768477	0	0	0	0	0	0	5.27707E-07	0	0	0	4.87605E-12	0	4.87605E-12	4.876E-06
397666.283768477.2	397666.28	3768477	0	0	0	0	0	0	3.27457E-07	0	0	0	3.02573E-12	0	3.02573E-12	3.026E-06
397766.283768477.2	397766.28	3768477	0	0	0	0	0	0	2.07168E-07	0	0	0	1.91425E-12	0	1.91425E-12	1.914E-06
397866.283768477.2	397866.28	3768477	0	0	0	0	0	0	1.61501E-07	0	0	0	1.49228E-12	0	1.49228E-12	1.492E-06
396166.283768577.2	396166.28	3768577	0	0	0	0	0	0	3.27836E-07	0	0	0	3.02923E-12	0	3.02923E-12	3.029E-06
396266.283768577.2	396266.28	3768577	0	0	0	0	0	0	3.69551E-07	0	0	0	3.41468E-12	0	3.41468E-12	3.415E-06
396366.283768577.2	396366.28	3768577	0	0	0	0	0	0	3.98699E-07	0	0	0	3.68401E-12	0	3.68401E-12	3.684E-06
396466.283768577.2	396466.28	3768577	0	0	0	0	0	0	4.78759E-07	0	0	0	4.42377E-12	0	4.42377E-12	4.424E-06
396566.283768577.2	396566.28	3768577	0	0	0	0	0	0	4.68876E-07	0	0	0	4.33245E-12	0	4.33245E-12	4.332E-06
396866.283768577.2	396866.28	3768577	0	0	0	0	0	0	6.0002E-07	0	0	0	5.54424E-12	0	5.54424E-12	5.544E-06
396966.283768577.2	396966.28	3768577	0	0	0	0	0	0	6.96704E-07	0	0	0	6.43761E-12	0	6.43761E-12	6.438E-06
397066.283768577.2	397066.28	3768577	0	0	0	0	0	0	8.61054E-07	0	0	0	7.95621E-12	0	7.95621E-12	7.956E-06
397166.283768577.2	397166.28	3768577	0	0	0	0	0	0	1.47425E-06	0	0	0	1.36222E-11	0	1.36222E-11	1.362E-05
397266.283768577.2	397266.28	3768577	0	0	0	0	0	0	6.49954E-06	0	0	0	6.00563E-11	0	6.00563E-11	6.006E-05
397366.283768577.2	397366.28	3768577	0	0	0	0	0	0	2.72239E-06	0	0	0	2.51551E-11	0	2.51551E-11	2.516E-05
397466.283768577.2	397466.28	3768577	0	0	0	0	0	0	8.72314E-07	0	0	0	8.06025E-12	0	8.06025E-12	8.06E-06
397566.283768577.2	397566.28	3768577	0	0	0	0	0	0	5.22169E-07	0	0	0	4.82488E-12	0	4.82488E-12	4.825E-06
397666.283768577.2	397666.28	3768577	0	0	0	0	0	0	3.47143E-07	0	0	0	3.20763E-12	0	3.20763E-12	3.208E-06
397766.283768577.2	397766.28	3768577	0	0	0	0	0	0	2.47039E-07	0	0	0	2.28266E-12	0	2.28266E-12	2.283E-06
397866.283768577.2	397866.28	3768577	0	0	0	0	0	0	1.80373E-07	0	0	0	1.66666E-12	0	1.66666E-12	1.667E-06
396166.283768677.2	396166.28	3768677	0	0	0	0	0	0	5.75926E-07	0	0	0	5.3216E-12	0	5.3216E-12	5.322E-06
396266.283768677.2	396266.28	3768677	0	0	0	0	0	0	6.57528E-07	0	0	0	6.07562E-12	0	6.07562E-12	6.076E-06
396366.283768677.2	396366.28	3768677	0	0	0	0	0	0	6.38467E-07	0	0	0	5.89949E-12	0	5.89949E-12	5.899E-06
396466.283768677.2	396466.28	3768677	0	0	0	0	0	0	7.83836E-07	0	0	0	7.24271E-12	0	7.24271E-12	7.243E-06
396566.283768677.2	396566.28	3768677	0	0	0	0	0	0	7.92388E-07	0	0	0	7.32173E-12	0	7.32173E-12	7.322E-06
396666.283768677.2	396666.28	3768677	0	0	0	0	0	0	8.08991E-07	0	0	0	7.47515E-12	0	7.47515E-12	7.475E-06
396766.283768677.2	396766.28	3768677	0	0	0	0	0	0	8.39518E-07	0	0	0	7.75722E-12	0	7.75722E-12	7.757E-06
396866.283768677.2	396866.28	3768677	0	0	0	0	0	0	9.32354E-07	0	0	0	8.61503E-12	0	8.61503E-12	8.615E-06
396966.283768677.2	396966.28	3768677	0	0	0	0	0	0	1.02056E-06	0	0	0	9.43008E-12	0	9.43008E-12	9.43E-06
397066.283768677.2	397066.28	3768677	0	0	0	0	0	0	1.18384E-06	0	0	0	1.09388E-11	0	1.09388E-11	1.094E-05

Garvey Reservoir Rehab - Mitigated Surge Tank Telemetry			Demolition - 2025	Demolition - 2026	Site Preparation - 2025	te Preparation - 202	Grading - 2025	Grading - 2026	Infrastructure - 2025	nfrastructure - 2026	Paving - 2025	rchitectural Coating - 202	Child Risk			
Unique Identifier	X (UTM)	Y (UTM)	1900	1900	1900	1900	1900	1900	2025	1900	2025	1900	3rd Trimester	0<2	Total	per million
397166.283768677.2	397166.28	3768677	0	0	0	0	0	0	1.85806E-06	0	0	0	1.71687E-11	0	1.71687E-11	1.717E-05
397366.283768677.2	397366.28	3768677	0	0	0	0	0	0	2.47083E-06	0	0	0	2.28307E-11	0	2.28307E-11	2.283E-05
397466.283768677.2	397466.28	3768677	0	0	0	0	0	0	9.95508E-07	0	0	0	9.19858E-12	0	9.19858E-12	9.199E-06
397566.283768677.2	397566.28	3768677	0	0	0	0	0	0	5.42881E-07	0	0	0	5.01627E-12	0	5.01627E-12	5.016E-06
397666.283768677.2	397666.28	3768677	0	0	0	0	0	0	3.55687E-07	0	0	0	3.28658E-12	0	3.28658E-12	3.287E-06
397766.283768677.2	397766.28	3768677	0	0	0	0	0	0	2.62349E-07	0	0	0	2.42413E-12	0	2.42413E-12	2.424E-06
397866.283768677.2	397866.28	3768677	0	0	0	0	0	0	1.9264E-07	0	0	0	1.78001E-12	0	1.78001E-12	1.78E-06
396166.283768777.2	396166.28	3768777	0	0	0	0	0	0	1.67232E-06	0	0	0	1.54524E-11	0	1.54524E-11	1.545E-05
396266.283768777.2	396266.28	3768777	0	0	0	0	0	0	2.07798E-06	0	0	0	1.92007E-11	0	1.92007E-11	1.92E-05
396366.283768777.2	396366.28	3768777	0	0	0	0	0	0	1.52339E-06	0	0	0	1.40763E-11	0	1.40763E-11	1.408E-05
396466.283768777.2	396466.28	3768777	0	0	0	0	0	0	1.99065E-06	0	0	0	1.83938E-11	0	1.83938E-11	1.839E-05
396566.283768777.2	396566.28	3768777	0	0	0	0	0	0	2.13172E-06	0	0	0	1.96973E-11	0	1.96973E-11	1.97E-05
396666.283768777.2	396666.28	3768777	0	0	0	0	0	0	2.13097E-06	0	0	0	1.96904E-11	0	1.96904E-11	1.969E-05
396766.283768777.2	396766.28	3768777	0	0	0	0	0	0	2.20438E-06	0	0	0	2.03686E-11	0	2.03686E-11	2.037E-05
396866.283768777.2	396866.28	3768777	0	0	0	0	0	0	2.29184E-06	0	0	0	2.11767E-11	0	2.11767E-11	2.118E-05
396966.283768777.2	396966.28	3768777	0	0	0	0	0	0	2.34836E-06	0	0	0	2.1699E-11	0	2.1699E-11	2.17E-05
397066.283768777.2	397066.28	3768777	0	0	0	0	0	0	2.52992E-06	0	0	0	2.33766E-11	0	2.33766E-11	2.338E-05
397166.283768777.2	397166.28	3768777	0	0	0	0	0	0	3.04664E-06	0	0	0	2.81512E-11	0	2.81512E-11	2.815E-05
397266.283768777.2	397266.28	3768777	0	0	0	0	0	0	9.71729E-06	0	0	0	8.97886E-11	0	8.97886E-11	8.979E-05
397366.283768777.2	397366.28	3768777	0	0	0	0	0	0	3.37633E-06	0	0	0	3.11976E-11	0	3.11976E-11	3.12E-05
397466.283768777.2	397466.28	3768777	0	0	0	0	0	0	1.18753E-06	0	0	0	1.09729E-11	0	1.09729E-11	1.097E-05
397566.283768777.2	397566.28	3768777	0	0	0	0	0	0	6.36904E-07	0	0	0	5.88504E-12	0	5.88504E-12	5.885E-06
397666.283768777.2	397666.28	3768777	0	0	0	0	0	0	4.00561E-07	0	0	0	3.70121E-12	0	3.70121E-12	3.701E-06
397766.283768777.2	397766.28	3768777	0	0	0	0	0	0	2.74228E-07	0	0	0	2.53389E-12	0	2.53389E-12	2.534E-06
397866.283768777.2	397866.28	3768777	0	0	0	0	0	0	1.99621E-07	0	0	0	1.84451E-12	0	1.84451E-12	1.845E-06
396166.283768877.2	396166.28	3768877	0	0	0	0	0	0	6.73295E-06	0	0	0	6.2213E-11	0	6.2213E-11	6.221E-05
396266.283768877.2	396266.28	3768877	0	0	0	0	0	0	8.6713E-06	0	0	0	8.01236E-11	0	8.01236E-11	8.012E-05
396366.283768877.2	396366.28	3768877	0	0	0	0	0	0	8.49094E-06	0	0	0	7.8457E-11	0	7.8457E-11	7.846E-05
396466.283768877.2	396466.28	3768877	0	0	0	0	0	0	9.35342E-06	0	0	0	8.64264E-11	0	8.64264E-11	8.643E-05
396566.283768877.2	396566.28	3768877	0	0	0	0	0	0	8.82157E-06	0	0	0	8.15121E-11	0	8.15121E-11	8.151E-05
396666.283768877.2	396666.28	3768877	0	0	0	0	0	0	9.58412E-06	0	0	0	8.85581E-11	0	8.85581E-11	8.856E-05
396766.283768877.2	396766.28	3768877	0	0	0	0	0	0	9.27598E-06	0	0	0	8.57108E-11	0	8.57108E-11	8.571E-05
396866.283768877.2	396866.28	3768877	0	0	0	0	0	0	9.01067E-06	0	0	0	8.32593E-11	0	8.32593E-11	8.326E-05
396966.283768877.2	396966.28	3768877	0	0	0	0	0	0	8.6645E-06	0	0	0	8.00607E-11	0	8.00607E-11	8.006E-05
397066.283768877.2	397066.28	3768877	0	0	0	0	0	0	8.7596E-06	0	0	0	8.09394E-11	0	8.09394E-11	8.094E-05
397166.283768877.2	397166.28	3768877	0	0	0	0	0	0	9.00308E-06	0	0	0	8.31892E-11	0	8.31892E-11	8.319E-05
397266.283768877.2	397266.28	3768877	0	0	0	0	0	0	9.45846E-06	0	0	0	8.7397E-11	0	8.7397E-11	8.74E-05
397366.283768877.2	397366.28	3768877	0	0	0	0	0	0	4.65064E-06	0	0	0	4.29723E-11	0	4.29723E-11	4.297E-05
397466.283768877.2	397466.28	3768877	0	0	0	0	0	0	1.2446E-06	0	0	0	1.15002E-11	0	1.15002E-11	1.15E-05
397566.283768877.2	397566.28	3768877	0	0	0	0	0	0	6.36416E-07	0	0	0	5.88054E-12	0	5.88054E-12	5.881E-06
397666.283768877.2	397666.28	3768877	0	0	0	0	0	0	3.94762E-07	0	0	0	3.64764E-12	0	3.64764E-12	3.648E-06
397766.283768877.2	397766.28	3768877	0	0	0	0	0	0	2.72878E-07	0	0	0	2.52141E-12	0	2.52141E-12	2.521E-06
397866.283768877.2	397866.28	3768877	0	0	0	0	0	0	2.01962E-07	0	0	0	1.86615E-12	0	1.86615E-12	1.866E-06
3964253767739	396425	3767739	0	0	0	0	0	0	9.0768E-08	0	0	0	8.38704E-13	0	8.38704E-13	8.387E-07
3964753767739	396475	3767739	0	0	0	0	0	0	9.29366E-08	0	0	0	8.58742E-13	0	8.58742E-13	8.587E-07
3965253767739	396525	3767739	0	0	0	0	0	0	8.6624E-08	0	0	0	8.00413E-13	0	8.00413E-13	8.004E-07
3965753767739	396575	3767739	0	0	0	0	0	0	8.91282E-08	0	0	0	8.23552E-13	0	8.23552E-13	8.236E-07
3966253767739	396625	3767739	0	0	0	0	0	0	8.56001E-08	0	0	0	7.90952E-13	0	7.90952E-13	7.91E-07
3966753767739	396675	3767739	0	0	0	0	0	0	8.75942E-08	0	0	0	8.09377E-13	0	8.09377E-13	8.094E-07
3967253767739	396725	3767739	0	0	0	0	0	0	9.15443E-08	0	0	0	8.45877E-13	0	8.45877E-13	8.459E-07
3967753767739	396775	3767739	0	0	0	0	0	0	9.23137E-08	0	0	0	8.52987E-13	0	8.52987E-13	8.53E-07
3968253767739	396825	3767739	0	0	0	0	0	0	9.75158E-08	0	0	0	9.01054E-13	0	9.01054E-13	9.011E-07
3968753767739	396875	3767739	0	0	0	0	0	0	1.00356E-07	0	0	0	9.27297E-13	0	9.27297E-13	9.273E-07
3969253767739	396925	3767739	0	0	0	0	0	0	1.00079E-07	0	0	0	9.24736E-13	0	9.24736E-13	9.247E-07
3969753767739	396975	3767739	0	0	0	0	0	0	9.94142E-08	0	0	0	9.18596E-13	0	9.18596E-13	9.186E-07
3970253767739	397025	3767739	0	0	0	0	0	0	9.89956E-08	0	0	0	9.14728E-13	0	9.14728E-13	9.147E-07
3970753767739	397075	3767739	0	0	0	0	0	0	9.95011E-08	0	0	0	9.19398E-13	0	9.19398E-13	9.194E-07
3971253767739	397125	3767739	0	0	0	0	0	0	9.96226E-08	0	0	0	9.20521E-13	0	9.20521E-13	9.205E-07
3971753767739	397175	3767739	0	0	0	0	0	0	9.83126E-08	0	0	0	9.08417E-13	0	9.08417E-13	9.084E-07
3972253767739	397225	3767739	0	0	0	0	0	0	9.62264E-08	0	0	0	8.8914E-13	0	8.8914E-13	8.891E-07
3972753767739	397275	3767739	0	0	0	0	0	0	9.0753E-08	0	0	0	8.38565E-13	0	8.38565E-13	8.386E-07
3973253767739	397325	3767739	0	0	0	0	0	0	9.07893E-08	0	0	0	8.38901E-13	0	8.38901E-13	8.389E-07
3973753767739	397375	3767739	0	0	0	0	0	0	9.04884E-08	0	0	0	8.36121E-13	0	8.36121E-13	8.361E-07
3974253767739	397425	3767739	0	0	0	0	0	0	8.80578E-08	0	0	0	8.13661E-13	0	8.13661E-13	8.137E-07
3974753767739	397475	3767739	0	0	0	0	0	0	7.77992E-08	0	0	0	7.18871E-13	0	7.18871E-13	7.189E-07
3975253767739	397525	3767739	0	0	0	0	0	0	7.52087E-08	0	0	0	6.94935E-13	0	6.94935E-13	6.949E-07
3964253767789	396425	3767789	0	0	0	0	0	0	9.69611E-08	0	0	0	8.95929E-13	0	8.95929E-13	8.959E-07
3964753767789	396475	3767789	0	0	0	0	0	0	9.3413E-08	0	0	0	8.63144E-13	0	8.63144E-13	8.631E-07
3965253767789	396525	3767789	0	0	0	0	0	0	8.84707E-08	0	0	0	8.17477E-13	0	8.17477E-13	8.175E-07
3965753767789	396575	3767789	0	0	0	0	0	0	8.95415E-08	0	0	0	8.27371E-13	0	8.27371E-13	8.274E-07
3966253767789	396625	3767789	0	0	0	0	0	0	9.1899E-08	0	0	0	8.49154E-13	0	8.49154E-13	8.492E-07

Garvey Reservoir Rehab - Mitigated Surge Tank Telemetry			Demolition - 2025	Demolition - 2026	Site Preparation - 2025	ite Preparation - 202	Grading - 2025	Grading - 2026	Infrastructure - 2025	nfrastructure - 2026	Paving - 2025	rchitectural Coating - 202	Child Risk			
Unique Identifier	X (UTM)	Y (UTM)	1900	1900	1900	1900	1900	1900	2025	1900	2025	1900	3rd Trimester	0<2	Total	per million
3966753767789	396675	3767789	0	0	0	0	0	0	9.46584E-08	0	0	0	8.74651E-13	0	8.74651E-13	8.747E-07
3967253767789	396725	3767789	0	0	0	0	0	0	1.02105E-07	0	0	0	9.4346E-13	0	9.4346E-13	9.435E-07
3967753767789	396775	3767789	0	0	0	0	0	0	1.04588E-07	0	0	0	9.66401E-13	0	9.66401E-13	9.664E-07
3968253767789	396825	3767789	0	0	0	0	0	0	1.09274E-07	0	0	0	1.0097E-12	0	1.0097E-12	1.01E-06
3968753767789	396875	3767789	0	0	0	0	0	0	1.10835E-07	0	0	0	1.02412E-12	0	1.02412E-12	1.024E-06
3969253767789	396925	3767789	0	0	0	0	0	0	1.10785E-07	0	0	0	1.02366E-12	0	1.02366E-12	1.024E-06
3969753767789	396975	3767789	0	0	0	0	0	0	1.09421E-07	0	0	0	1.01106E-12	0	1.01106E-12	1.011E-06
3970253767789	397025	3767789	0	0	0	0	0	0	1.0881E-07	0	0	0	1.00541E-12	0	1.00541E-12	1.005E-06
3970753767789	397075	3767789	0	0	0	0	0	0	1.09829E-07	0	0	0	1.01483E-12	0	1.01483E-12	1.015E-06
3971253767789	397125	3767789	0	0	0	0	0	0	1.10623E-07	0	0	0	1.02217E-12	0	1.02217E-12	1.022E-06
3971753767789	397175	3767789	0	0	0	0	0	0	1.10126E-07	0	0	0	1.01757E-12	0	1.01757E-12	1.018E-06
3972253767789	397225	3767789	0	0	0	0	0	0	1.08747E-07	0	0	0	1.00483E-12	0	1.00483E-12	1.005E-06
3972753767789	397275	3767789	0	0	0	0	0	0	1.02727E-07	0	0	0	9.4921E-13	0	9.4921E-13	9.492E-07
3973253767789	397325	3767789	0	0	0	0	0	0	1.00232E-07	0	0	0	9.26148E-13	0	9.26148E-13	9.261E-07
3973753767789	397375	3767789	0	0	0	0	0	0	1.00552E-07	0	0	0	9.29105E-13	0	9.29105E-13	9.291E-07
3974253767789	397425	3767789	0	0	0	0	0	0	9.8493E-08	0	0	0	9.10083E-13	0	9.10083E-13	9.101E-07
3974753767789	397475	3767789	0	0	0	0	0	0	8.58282E-08	0	0	0	7.9306E-13	0	7.9306E-13	7.931E-07
3975253767789	397525	3767789	0	0	0	0	0	0	8.32442E-08	0	0	0	7.69183E-13	0	7.69183E-13	7.692E-07
3964253767839	396425	3767839	0	0	0	0	0	0	1.0352E-07	0	0	0	9.56532E-13	0	9.56532E-13	9.565E-07
3964753767839	396475	3767839	0	0	0	0	0	0	1.02861E-07	0	0	0	9.50446E-13	0	9.50446E-13	9.504E-07
3965253767839	396525	3767839	0	0	0	0	0	0	9.32844E-08	0	0	0	8.61956E-13	0	8.61956E-13	8.62E-07
3965753767839	396575	3767839	0	0	0	0	0	0	9.5963E-08	0	0	0	8.86706E-13	0	8.86706E-13	8.867E-07
3966253767839	396625	3767839	0	0	0	0	0	0	9.88542E-08	0	0	0	9.13421E-13	0	9.13421E-13	9.134E-07
3966753767839	396675	3767839	0	0	0	0	0	0	1.10261E-07	0	0	0	1.01882E-12	0	1.01882E-12	1.019E-06
3967253767839	396725	3767839	0	0	0	0	0	0	1.15507E-07	0	0	0	1.0673E-12	0	1.0673E-12	1.067E-06
3967753767839	396775	3767839	0	0	0	0	0	0	1.18535E-07	0	0	0	1.09527E-12	0	1.09527E-12	1.095E-06
3968253767839	396825	3767839	0	0	0	0	0	0	1.21489E-07	0	0	0	1.12257E-12	0	1.12257E-12	1.123E-06
3968753767839	396875	3767839	0	0	0	0	0	0	1.22916E-07	0	0	0	1.13575E-12	0	1.13575E-12	1.136E-06
3969253767839	396925	3767839	0	0	0	0	0	0	1.23286E-07	0	0	0	1.13918E-12	0	1.13918E-12	1.139E-06
3969753767839	396975	3767839	0	0	0	0	0	0	1.22016E-07	0	0	0	1.12744E-12	0	1.12744E-12	1.127E-06
3970253767839	397025	3767839	0	0	0	0	0	0	1.21042E-07	0	0	0	1.11844E-12	0	1.11844E-12	1.118E-06
3970753767839	397075	3767839	0	0	0	0	0	0	1.23654E-07	0	0	0	1.14258E-12	0	1.14258E-12	1.143E-06
3971253767839	397125	3767839	0	0	0	0	0	0	1.25927E-07	0	0	0	1.16358E-12	0	1.16358E-12	1.164E-06
3971753767839	397175	3767839	0	0	0	0	0	0	1.24263E-07	0	0	0	1.1482E-12	0	1.1482E-12	1.148E-06
3972253767839	397225	3767839	0	0	0	0	0	0	1.19468E-07	0	0	0	1.10389E-12	0	1.10389E-12	1.104E-06
3972753767839	397275	3767839	0	0	0	0	0	0	1.13171E-07	0	0	0	1.04571E-12	0	1.04571E-12	1.046E-06
3973253767839	397325	3767839	0	0	0	0	0	0	1.07894E-07	0	0	0	9.96947E-13	0	9.96947E-13	9.969E-07
3973753767839	397375	3767839	0	0	0	0	0	0	1.12239E-07	0	0	0	1.0371E-12	0	1.0371E-12	1.037E-06
3974753767839	397475	3767839	0	0	0	0	0	0	1.05798E-07	0	0	0	9.7758E-13	0	9.7758E-13	9.776E-07
3975253767839	397525	3767839	0	0	0	0	0	0	9.04213E-08	0	0	0	8.35501E-13	0	8.35501E-13	8.355E-07
3964253767889	396425	3767889	0	0	0	0	0	0	1.09465E-07	0	0	0	1.01146E-12	0	1.01146E-12	1.011E-06
3964753767889	396475	3767889	0	0	0	0	0	0	9.73195E-08	0	0	0	8.9924E-13	0	8.9924E-13	8.992E-07
3965253767889	396525	3767889	0	0	0	0	0	0	9.98772E-08	0	0	0	9.22873E-13	0	9.22873E-13	9.229E-07
3965753767889	396575	3767889	0	0	0	0	0	0	1.04401E-07	0	0	0	9.64669E-13	0	9.64669E-13	9.647E-07
3974753767889	397475	3767889	0	0	0	0	0	0	1.14784E-07	0	0	0	1.06061E-12	0	1.06061E-12	1.061E-06
3975253767889	397525	3767889	0	0	0	0	0	0	9.97465E-08	0	0	0	9.21666E-13	0	9.21666E-13	9.217E-07
3964253767939	396425	3767939	0	0	0	0	0	0	1.16207E-07	0	0	0	1.07376E-12	0	1.07376E-12	1.074E-06
3964753767939	396475	3767939	0	0	0	0	0	0	1.04453E-07	0	0	0	9.65153E-13	0	9.65153E-13	9.652E-07
3965253767939	396525	3767939	0	0	0	0	0	0	1.08194E-07	0	0	0	9.99724E-13	0	9.99724E-13	9.997E-07
3974753767939	397475	3767939	0	0	0	0	0	0	1.21961E-07	0	0	0	1.12693E-12	0	1.12693E-12	1.127E-06
3975253767939	397525	3767939	0	0	0	0	0	0	1.1149E-07	0	0	0	1.03017E-12	0	1.03017E-12	1.03E-06
3964253767989	396425	3767989	0	0	0	0	0	0	1.14007E-07	0	0	0	1.05343E-12	0	1.05343E-12	1.053E-06
3964753767989	396475	3767989	0	0	0	0	0	0	1.13513E-07	0	0	0	1.04887E-12	0	1.04887E-12	1.049E-06
3974753767989	397475	3767989	0	0	0	0	0	0	1.40162E-07	0	0	0	1.29511E-12	0	1.29511E-12	1.295E-06
3975253767989	397525	3767989	0	0	0	0	0	0	1.27033E-07	0	0	0	1.1738E-12	0	1.1738E-12	1.174E-06
3964253768039	396425	3768039	0	0	0	0	0	0	1.22905E-07	0	0	0	1.13566E-12	0	1.13566E-12	1.136E-06
3964753768039	396475	3768039	0	0	0	0	0	0	1.26995E-07	0	0	0	1.17345E-12	0	1.17345E-12	1.173E-06
3974753768039	397475	3768039	0	0	0	0	0	0	1.87124E-07	0	0	0	1.72904E-12	0	1.72904E-12	1.729E-06
3975253768039	397525	3768039	0	0	0	0	0	0	1.75103E-07	0	0	0	1.61797E-12	0	1.61797E-12	1.618E-06
3964253768089	396425	3768089	0	0	0	0	0	0	1.35536E-07	0	0	0	1.25236E-12	0	1.25236E-12	1.252E-06
3964753768089	396475	3768089	0	0	0	0	0	0	1.42454E-07	0	0	0	1.31629E-12	0	1.31629E-12	1.316E-06
3974753768089	397475	3768089	0	0	0	0	0	0	2.51867E-07	0	0	0	2.32728E-12	0	2.32728E-12	2.327E-06
3975253768089	397525	3768089	0	0	0	0	0	0	2.31961E-07	0	0	0	2.14334E-12	0	2.14334E-12	2.143E-06
3964253768139	396425	3768139	0	0	0	0	0	0	1.6877E-07	0	0	0	1.55945E-12	0	1.55945E-12	1.559E-06
3964753768139	396475	3768139	0	0	0	0	0	0	1.55458E-07	0	0	0	1.43644E-12	0	1.43644E-12	1.436E-06
3974253768139	397425	3768139	0	0	0	0	0	0	5.34334E-07	0	0	0	4.93729E-12	0	4.93729E-12	4.937E-06
3974753768139	397475	3768139	0	0	0	0	0	0	3.87108E-07	0	0	0	3.57691E-12	0	3.57691E-12	3.577E-06
3975253768139	397525	3768139	0	0	0	0	0	0	2.92081E-07	0	0	0	2.69886E-12	0	2.69886E-12	2.699E-06
3964253768189	396425	3768189	0	0	0	0	0	0	1.81825E-07	0	0	0	1.68007E-12	0	1.68007E-12	1.68E-06
3964753768189	396475	3768189	0	0	0	0	0	0	1.70179E-07	0	0	0	1.57247E-12	0	1.57247E-12	1.572E-06
3973753768189	397375	3768189	0	0	0	0	0	0	3.16724E-06	0	0	0	2.92656E-11	0	2.92656E-11	2.927E-05

Garvey Reservoir Rehab - Mitigated Surge Tank Telemetry			Demolition - 2025	Demolition - 2026	Site Preparation - 2025	ite Preparation - 202	Grading - 2025	Grading - 2026	Infrastructure - 2025	nfrastructure - 2026	Paving - 2025	rchitectural Coating - 202	Child Risk			
Unique Identifier	X (UTM)	Y (UTM)	1900	1900	1900	1900	1900	1900	2025	1900	2025	1900	3rd Trimester	0<2	Total	per million
3974253768189	397425	3768189	0	0	0	0	0	0	9.14856E-07	0	0	0	8.45334E-12	0	8.45334E-12	8.453E-06
3974753768189	397475	3768189	0	0	0	0	0	0	5.24195E-07	0	0	0	4.84361E-12	0	4.84361E-12	4.844E-06
3975253768189	397525	3768189	0	0	0	0	0	0	3.60921E-07	0	0	0	3.33494E-12	0	3.33494E-12	3.335E-06
3964253768239	396425	3768239	0	0	0	0	0	0	1.96791E-07	0	0	0	1.81837E-12	0	1.81837E-12	1.818E-06
3964753768239	396475	3768239	0	0	0	0	0	0	1.88175E-07	0	0	0	1.73875E-12	0	1.73875E-12	1.739E-06
3973753768239	397375	3768239	0	0	0	0	0	0	4.61395E-06	0	0	0	4.26332E-11	0	4.26332E-11	4.263E-05
3974253768239	397425	3768239	0	0	0	0	0	0	1.17331E-06	0	0	0	1.08415E-11	0	1.08415E-11	1.084E-05
3974753768239	397475	3768239	0	0	0	0	0	0	6.32611E-07	0	0	0	5.84538E-12	0	5.84538E-12	5.845E-06
3975253768239	397525	3768239	0	0	0	0	0	0	4.29129E-07	0	0	0	3.96518E-12	0	3.96518E-12	3.965E-06
3964253768289	396425	3768289	0	0	0	0	0	0	2.10651E-07	0	0	0	1.94643E-12	0	1.94643E-12	1.946E-06
3964753768289	396475	3768289	0	0	0	0	0	0	2.09652E-07	0	0	0	1.9372E-12	0	1.9372E-12	1.937E-06
3973253768289	397325	3768289	0	0	0	0	0	0	1.22233E-05	0	0	0	1.12945E-10	0	1.12945E-10	0.0001129
3973753768289	397375	3768289	0	0	0	0	0	0	3.23571E-06	0	0	0	2.98982E-11	0	2.98982E-11	2.99E-05
3974253768289	397425	3768289	0	0	0	0	0	0	1.42608E-06	0	0	0	1.31771E-11	0	1.31771E-11	1.318E-05
3974753768289	397475	3768289	0	0	0	0	0	0	7.86182E-07	0	0	0	7.26439E-12	0	7.26439E-12	7.264E-06
3975253768289	397525	3768289	0	0	0	0	0	0	5.10114E-07	0	0	0	4.71349E-12	0	4.71349E-12	4.713E-06
3964253768339	396425	3768339	0	0	0	0	0	0	2.38691E-07	0	0	0	2.20552E-12	0	2.20552E-12	2.206E-06
3964753768339	396475	3768339	0	0	0	0	0	0	2.3691E-07	0	0	0	2.18907E-12	0	2.18907E-12	2.189E-06
3965253768339	396525	3768339	0	0	0	0	0	0	2.52547E-07	0	0	0	2.33355E-12	0	2.33355E-12	2.334E-06
3972753768339	397275	3768339	0	0	0	0	0	0	9.93064E-06	0	0	0	9.176E-11	0	9.176E-11	9.176E-05
3973253768339	397325	3768339	0	0	0	0	0	0	7.32089E-06	0	0	0	6.76456E-11	0	6.76456E-11	6.765E-05
3973753768339	397375	3768339	0	0	0	0	0	0	2.6966E-06	0	0	0	2.49168E-11	0	2.49168E-11	2.492E-05
3974253768339	397425	3768339	0	0	0	0	0	0	1.41789E-06	0	0	0	1.31014E-11	0	1.31014E-11	1.31E-05
3974753768339	397475	3768339	0	0	0	0	0	0	8.52659E-07	0	0	0	7.87864E-12	0	7.87864E-12	7.879E-06
3975253768339	397525	3768339	0	0	0	0	0	0	5.66484E-07	0	0	0	5.23435E-12	0	5.23435E-12	5.234E-06
3964253768389	396425	3768389	0	0	0	0	0	0	2.65247E-07	0	0	0	2.4509E-12	0	2.4509E-12	2.451E-06
3964753768389	396475	3768389	0	0	0	0	0	0	2.69992E-07	0	0	0	2.49475E-12	0	2.49475E-12	2.495E-06
3965253768389	396525	3768389	0	0	0	0	0	0	2.82988E-07	0	0	0	2.61483E-12	0	2.61483E-12	2.615E-06
3972253768389	397225	3768389	0	0	0	0	0	0	2.38731E-06	0	0	0	2.20589E-11	0	2.20589E-11	2.206E-05
3972753768389	397275	3768389	0	0	0	0	0	0	9.45567E-06	0	0	0	8.73712E-11	0	8.73712E-11	8.737E-05
3973253768389	397325	3768389	0	0	0	0	0	0	7.32333E-06	0	0	0	6.76682E-11	0	6.76682E-11	6.767E-05
3973753768389	397375	3768389	0	0	0	0	0	0	2.59588E-06	0	0	0	2.39862E-11	0	2.39862E-11	2.399E-05
3974253768389	397425	3768389	0	0	0	0	0	0	1.42028E-06	0	0	0	1.31235E-11	0	1.31235E-11	1.312E-05
3974753768389	397475	3768389	0	0	0	0	0	0	8.98111E-07	0	0	0	8.29862E-12	0	8.29862E-12	8.299E-06
3975253768389	397525	3768389	0	0	0	0	0	0	6.16887E-07	0	0	0	5.70009E-12	0	5.70009E-12	5.7E-06
3964253768439	396425	3768439	0	0	0	0	0	0	3.01042E-07	0	0	0	2.78166E-12	0	2.78166E-12	2.782E-06
3964753768439	396475	3768439	0	0	0	0	0	0	3.10017E-07	0	0	0	2.86458E-12	0	2.86458E-12	2.865E-06
3965253768439	396525	3768439	0	0	0	0	0	0	3.21193E-07	0	0	0	2.96785E-12	0	2.96785E-12	2.968E-06
3971753768439	397175	3768439	0	0	0	0	0	0	1.28612E-06	0	0	0	1.18839E-11	0	1.18839E-11	1.188E-05
3972253768439	397225	3768439	0	0	0	0	0	0	2.50443E-06	0	0	0	2.31411E-11	0	2.31411E-11	2.314E-05
3972753768439	397275	3768439	0	0	0	0	0	0	9.50244E-06	0	0	0	8.78034E-11	0	8.78034E-11	8.78E-05
3973253768439	397325	3768439	0	0	0	0	0	0	7.1501E-06	0	0	0	6.60676E-11	0	6.60676E-11	6.607E-05
3973753768439	397375	3768439	0	0	0	0	0	0	2.39955E-06	0	0	0	2.2172E-11	0	2.2172E-11	2.217E-05
3974253768439	397425	3768439	0	0	0	0	0	0	1.31306E-06	0	0	0	1.21328E-11	0	1.21328E-11	1.213E-05
3974753768439	397475	3768439	0	0	0	0	0	0	9.29808E-07	0	0	0	8.5915E-12	0	8.5915E-12	8.591E-06
3975253768439	397525	3768439	0	0	0	0	0	0	6.52985E-07	0	0	0	6.03364E-12	0	6.03364E-12	6.034E-06
3964253768489	396425	3768489	0	0	0	0	0	0	3.43383E-07	0	0	0	3.17289E-12	0	3.17289E-12	3.173E-06
3964753768489	396475	3768489	0	0	0	0	0	0	3.58047E-07	0	0	0	3.30838E-12	0	3.30838E-12	3.308E-06
3965253768489	396525	3768489	0	0	0	0	0	0	3.7197E-07	0	0	0	3.43704E-12	0	3.43704E-12	3.437E-06
3970753768489	397075	3768489	0	0	0	0	0	0	7.32546E-07	0	0	0	6.76879E-12	0	6.76879E-12	6.769E-06
3971253768489	397125	3768489	0	0	0	0	0	0	9.30641E-07	0	0	0	8.5992E-12	0	8.5992E-12	8.599E-06
3971753768489	397175	3768489	0	0	0	0	0	0	1.34596E-06	0	0	0	1.24368E-11	0	1.24368E-11	1.244E-05
3972253768489	397225	3768489	0	0	0	0	0	0	2.48988E-06	0	0	0	2.30067E-11	0	2.30067E-11	2.301E-05
3972753768489	397275	3768489	0	0	0	0	0	0	9.32927E-06	0	0	0	8.62032E-11	0	8.62032E-11	8.62E-05
3973253768489	397325	3768489	0	0	0	0	0	0	6.17087E-06	0	0	0	5.70193E-11	0	5.70193E-11	5.702E-05
3973753768489	397375	3768489	0	0	0	0	0	0	2.36365E-06	0	0	0	2.18404E-11	0	2.18404E-11	2.184E-05
3974253768489	397425	3768489	0	0	0	0	0	0	1.30462E-06	0	0	0	1.20548E-11	0	1.20548E-11	1.205E-05
3974753768489	397475	3768489	0	0	0	0	0	0	8.13122E-07	0	0	0	7.51331E-12	0	7.51331E-12	7.513E-06
3975253768489	397525	3768489	0	0	0	0	0	0	5.89061E-07	0	0	0	5.44298E-12	0	5.44298E-12	5.443E-06
3964253768539	396425	3768539	0	0	0	0	0	0	3.99334E-07	0	0	0	3.68987E-12	0	3.68987E-12	3.69E-06
3964753768539	396475	3768539	0	0	0	0	0	0	4.21103E-07	0	0	0	3.89103E-12	0	3.89103E-12	3.891E-06
3965253768539	396525	3768539	0	0	0	0	0	0	4.3514E-07	0	0	0	4.02073E-12	0	4.02073E-12	4.021E-06
3965753768539	396575	3768539	0	0	0	0	0	0	4.18776E-07	0	0	0	3.86952E-12	0	3.86952E-12	3.87E-06
3970253768539	397025	3768539	0	0	0	0	0	0	6.92943E-07	0	0	0	6.40285E-12	0	6.40285E-12	6.403E-06
3970753768539	397075	3768539	0	0	0	0	0	0	8.10826E-07	0	0	0	7.4921E-12	0	7.4921E-12	7.492E-06
3971253768539	397125	3768539	0	0	0	0	0	0	1.0188E-06	0	0	0	9.41381E-12	0	9.41381E-12	9.414E-06
3971753768539	397175	3768539	0	0	0	0	0	0	1.45466E-06	0	0	0	1.34412E-11	0	1.34412E-11	1.344E-05
3972253768539	397225	3768539	0	0	0	0	0	0	2.55131E-06	0	0	0	2.35743E-11	0	2.35743E-11	2.357E-05
3972753768539	397275	3768539	0	0	0	0	0	0	8.49806E-06	0	0	0	7.85228E-11	0	7.85228E-11	7.852E-05
3973253768539	397325	3768539	0	0	0	0	0	0	5.95109E-06	0	0	0	5.49885E-11	0	5.49885E-11	5.499E-05
3973753768539	397375	3768539	0	0	0	0	0	0	2.38068E-06	0	0	0	2.19977E-11	0	2.19977E-11	2.2E-05

Garvey Reservoir Rehab - Mitigated Surge Tank Telemetry			Demolition - 2025	Demolition - 2026	Site Preparation - 2025	ite Preparation - 202	Grading - 2025	Grading - 2026	Infrastructure - 2025	nfrastructure - 2026	Paving - 2025	rchitectural Coating - 202	Child Risk			
Unique Identifier	X (UTM)	Y (UTM)	1900	1900	1900	1900	1900	1900	2025	1900	2025	1900	3rd Trimester	0<2	Total	per million
3974253768539	397425	3768539	0	0	0	0	0	0	1.27506E-06	0	0	0	1.17816E-11	0	1.17816E-11	1.178E-05
3974753768539	397475	3768539	0	0	0	0	0	0	8.22485E-07	0	0	0	7.59983E-12	0	7.59983E-12	7.6E-06
3975253768539	397525	3768539	0	0	0	0	0	0	5.85696E-07	0	0	0	5.41188E-12	0	5.41188E-12	5.412E-06
3964253768589	396425	3768589	0	0	0	0	0	0	4.66023E-07	0	0	0	4.30609E-12	0	4.30609E-12	4.306E-06
3964753768589	396475	3768589	0	0	0	0	0	0	5.05701E-07	0	0	0	4.67272E-12	0	4.67272E-12	4.673E-06
3965253768589	396525	3768589	0	0	0	0	0	0	5.03894E-07	0	0	0	4.65603E-12	0	4.65603E-12	4.656E-06
3965753768589	396575	3768589	0	0	0	0	0	0	4.86158E-07	0	0	0	4.49214E-12	0	4.49214E-12	4.492E-06
3966253768589	396625	3768589	0	0	0	0	0	0	4.80616E-07	0	0	0	4.44093E-12	0	4.44093E-12	4.441E-06
3968253768589	396825	3768589	0	0	0	0	0	0	5.92152E-07	0	0	0	5.47153E-12	0	5.47153E-12	5.472E-06
3968753768589	396875	3768589	0	0	0	0	0	0	6.27671E-07	0	0	0	5.79973E-12	0	5.79973E-12	5.8E-06
3969253768589	396925	3768589	0	0	0	0	0	0	6.81768E-07	0	0	0	6.29959E-12	0	6.29959E-12	6.3E-06
3969753768589	396975	3768589	0	0	0	0	0	0	7.31863E-07	0	0	0	6.76247E-12	0	6.76247E-12	6.762E-06
3970253768589	397025	3768589	0	0	0	0	0	0	8.05111E-07	0	0	0	7.43929E-12	0	7.43929E-12	7.439E-06
3970753768589	397075	3768589	0	0	0	0	0	0	9.14589E-07	0	0	0	8.45088E-12	0	8.45088E-12	8.451E-06
3971253768589	397125	3768589	0	0	0	0	0	0	1.14892E-06	0	0	0	1.06162E-11	0	1.06162E-11	1.062E-05
3971753768589	397175	3768589	0	0	0	0	0	0	1.62855E-06	0	0	0	1.50479E-11	0	1.50479E-11	1.505E-05
3972253768589	397225	3768589	0	0	0	0	0	0	2.84832E-06	0	0	0	2.63187E-11	0	2.63187E-11	2.632E-05
3972753768589	397275	3768589	0	0	0	0	0	0	9.07695E-06	0	0	0	8.38717E-11	0	8.38717E-11	8.387E-05
3973253768589	397325	3768589	0	0	0	0	0	0	5.91009E-06	0	0	0	5.46098E-11	0	5.46098E-11	5.461E-05
3973753768589	397375	3768589	0	0	0	0	0	0	2.38013E-06	0	0	0	2.19926E-11	0	2.19926E-11	2.199E-05
3974253768589	397425	3768589	0	0	0	0	0	0	1.23782E-06	0	0	0	1.14376E-11	0	1.14376E-11	1.144E-05
3974753768589	397475	3768589	0	0	0	0	0	0	8.16547E-07	0	0	0	7.54496E-12	0	7.54496E-12	7.545E-06
3975253768589	397525	3768589	0	0	0	0	0	0	5.90625E-07	0	0	0	5.45742E-12	0	5.45742E-12	5.457E-06
3964253768639	396425	3768639	0	0	0	0	0	0	5.61717E-07	0	0	0	5.19031E-12	0	5.19031E-12	5.19E-06
3964753768639	396475	3768639	0	0	0	0	0	0	6.36065E-07	0	0	0	5.87729E-12	0	5.87729E-12	5.877E-06
3965253768639	396525	3768639	0	0	0	0	0	0	5.97717E-07	0	0	0	5.52296E-12	0	5.52296E-12	5.523E-06
3965753768639	396575	3768639	0	0	0	0	0	0	6.01335E-07	0	0	0	5.55638E-12	0	5.55638E-12	5.556E-06
3966253768639	396625	3768639	0	0	0	0	0	0	6.1207E-07	0	0	0	5.65557E-12	0	5.65557E-12	5.656E-06
3966753768639	396675	3768639	0	0	0	0	0	0	6.24843E-07	0	0	0	5.7736E-12	0	5.7736E-12	5.774E-06
3967253768639	396725	3768639	0	0	0	0	0	0	6.44125E-07	0	0	0	5.95177E-12	0	5.95177E-12	5.952E-06
3967753768639	396775	3768639	0	0	0	0	0	0	6.79063E-07	0	0	0	6.2746E-12	0	6.2746E-12	6.275E-06
3968253768639	396825	3768639	0	0	0	0	0	0	7.12615E-07	0	0	0	6.58462E-12	0	6.58462E-12	6.585E-06
3968753768639	396875	3768639	0	0	0	0	0	0	7.64108E-07	0	0	0	7.06042E-12	0	7.06042E-12	7.06E-06
3969253768639	396925	3768639	0	0	0	0	0	0	8.22071E-07	0	0	0	7.596E-12	0	7.596E-12	7.596E-06
3969753768639	396975	3768639	0	0	0	0	0	0	8.73162E-07	0	0	0	8.06809E-12	0	8.06809E-12	8.068E-06
3970253768639	397025	3768639	0	0	0	0	0	0	9.42057E-07	0	0	0	8.70469E-12	0	8.70469E-12	8.705E-06
3970753768639	397075	3768639	0	0	0	0	0	0	1.04547E-06	0	0	0	9.6602E-12	0	9.6602E-12	9.66E-06
3971253768639	397125	3768639	0	0	0	0	0	0	1.2571E-06	0	0	0	1.16157E-11	0	1.16157E-11	1.162E-05
3971753768639	397175	3768639	0	0	0	0	0	0	1.8391E-06	0	0	0	1.69934E-11	0	1.69934E-11	1.699E-05
3972253768639	397225	3768639	0	0	0	0	0	0	3.62446E-06	0	0	0	3.34903E-11	0	3.34903E-11	3.349E-05
3972753768639	397275	3768639	0	0	0	0	0	0	1.26254E-05	0	0	0	1.16659E-10	0	1.16659E-10	0.0001167
3973253768639	397325	3768639	0	0	0	0	0	0	5.3237E-06	0	0	0	4.91914E-11	0	4.91914E-11	4.919E-05
3973753768639	397375	3768639	0	0	0	0	0	0	2.34555E-06	0	0	0	2.16731E-11	0	2.16731E-11	2.167E-05
3974253768639	397425	3768639	0	0	0	0	0	0	1.36722E-06	0	0	0	1.26332E-11	0	1.26332E-11	1.263E-05
3974753768639	397475	3768639	0	0	0	0	0	0	8.11605E-07	0	0	0	7.4993E-12	0	7.4993E-12	7.499E-06
3975253768639	397525	3768639	0	0	0	0	0	0	5.96383E-07	0	0	0	5.51063E-12	0	5.51063E-12	5.511E-06
3964253768689	396425	3768689	0	0	0	0	0	0	7.24038E-07	0	0	0	6.69017E-12	0	6.69017E-12	6.69E-06
3964753768689	396475	3768689	0	0	0	0	0	0	8.58881E-07	0	0	0	7.93613E-12	0	7.93613E-12	7.936E-06
3965253768689	396525	3768689	0	0	0	0	0	0	8.91452E-07	0	0	0	8.23709E-12	0	8.23709E-12	8.237E-06
3965753768689	396575	3768689	0	0	0	0	0	0	8.76162E-07	0	0	0	8.09581E-12	0	8.09581E-12	8.096E-06
3966253768689	396625	3768689	0	0	0	0	0	0	8.86462E-07	0	0	0	8.19098E-12	0	8.19098E-12	8.191E-06
3966753768689	396675	3768689	0	0	0	0	0	0	8.80542E-07	0	0	0	8.13628E-12	0	8.13628E-12	8.136E-06
3967253768689	396725	3768689	0	0	0	0	0	0	8.95219E-07	0	0	0	8.2719E-12	0	8.2719E-12	8.272E-06
3967753768689	396775	3768689	0	0	0	0	0	0	9.08079E-07	0	0	0	8.39072E-12	0	8.39072E-12	8.391E-06
3968253768689	396825	3768689	0	0	0	0	0	0	9.5723E-07	0	0	0	8.84488E-12	0	8.84488E-12	8.845E-06
3968753768689	396875	3768689	0	0	0	0	0	0	1.00822E-06	0	0	0	9.31606E-12	0	9.31606E-12	9.316E-06
3969253768689	396925	3768689	0	0	0	0	0	0	1.05176E-06	0	0	0	9.71834E-12	0	9.71834E-12	9.718E-06
3969753768689	396975	3768689	0	0	0	0	0	0	1.09665E-06	0	0	0	1.01331E-11	0	1.01331E-11	1.013E-05
3970253768689	397025	3768689	0	0	0	0	0	0	1.15927E-06	0	0	0	1.07118E-11	0	1.07118E-11	1.071E-05
3970753768689	397075	3768689	0	0	0	0	0	0	1.27162E-06	0	0	0	1.17499E-11	0	1.17499E-11	1.175E-05
3971253768689	397125	3768689	0	0	0	0	0	0	1.48498E-06	0	0	0	1.37213E-11	0	1.37213E-11	1.372E-05
3971753768689	397175	3768689	0	0	0	0	0	0	2.07075E-06	0	0	0	1.91339E-11	0	1.91339E-11	1.913E-05
3972253768689	397225	3768689	0	0	0	0	0	0	4.69595E-06	0	0	0	4.3391E-11	0	4.3391E-11	4.339E-05
3972753768689	397275	3768689	0	0	0	0	0	0	1.28985E-05	0	0	0	1.19183E-10	0	1.19183E-10	0.0001192
3973253768689	397325	3768689	0	0	0	0	0	0	4.31696E-06	0	0	0	3.98891E-11	0	3.98891E-11	3.989E-05
3973753768689	397375	3768689	0	0	0	0	0	0	2.18547E-06	0	0	0	2.01939E-11	0	2.01939E-11	2.019E-05
3974253768689	397425	3768689	0	0	0	0	0	0	1.36516E-06	0	0	0	1.26142E-11	0	1.26142E-11	1.261E-05
3974753768689	397475	3768689	0	0	0	0	0	0	9.31649E-07	0	0	0	8.60852E-12	0	8.60852E-12	8.609E-06
3975253768689	397525	3768689	0	0	0	0	0	0	6.76177E-07	0	0	0	6.24793E-12	0	6.24793E-12	6.248E-06

Garvey Reservoir Rehab - Mitigated Surge Tank Telemetry

Maximum Individual Non-Cancer Impact Calculations - Sensitive Receptors (Maximum Impacted Senior Residential Receptor) (IMPACT AT ALL OTHER LOCATIONS ON THE PROJECT SITE WOULD BE LESS THAN SHOWN)

Maximum Non-cancer Chronic Hazards / Toxicological Endpoints*

Receptor Group	Pollutant	CREL[1]	CONC	WFrac	$CONC_{WF}$	HI		ALIM	BN	CVS	DEV	ENDC	EYE	HEM	IMMUN	KIDN	NS	REPRO	RESP	SK
Project:																				
MEI - Max	DPM	5.00E+00	2.11E-03	1.00E+00	2.11E-03	0.000		-	-	-	-	-	-	-	-	-	-	-	4.21E-04	-
							Total Risk				-			-				-	0.000	
							Threshold				1.00			1.00				1.00	1.00	
							Over?				NO			NO				NO	NO	

Notes:

1. California Air Resources Board, "Consolidated Table of OEHHA/ARB Approved Risk Assessment Health Values," "OEHHA/ARB Approved Chronic Reference Exposure Levels and Target Organs," "OEHHA/ARB Approved Acute Reference Exposure Levels and Target Organs," and "OEHHA/ARB Approved 8-Hour Reference Exposure Levels and Target Organs," http://www.arb.ca.gov/toxics/healthval/healthval.htm. Tables last updated: May 8, 2018. Downloaded: 08/14/18.

Source: ESA, 2020

Where:

$CONC_{WF}$	Pollutant Concentration ($\mu g/m^3$) multiplied by the weight fraction
CREL	Chronic Reference Exposure Level
HI	Hazard Index
MEI	Maximally Exposed Individual
WFrac	Weight fraction of speciated component

* Key to Toxicological Endpoints

ALIM	Alimentary Tract	EYE	Eye	NS	Nervous System
BN	Bone	HEM	Hematologic System	REPRO	Reproductive System
CVS	Cardiovascular System	IMMUN	Immune System	RESP	Respiratory System
DEV	Developmental System	KIDN	Kidney	SK	Skin
ENDC	Endocrine System				

Chronic HI

Administration Building and Water Quality Laboratory

Garvey Reservoir Rehab -Unmitigated Administration Building and Water Quality Laboratory

Cancer Risk Summary & Maximum Annual GLC for Chronic Calculations

Cancer Risk Summary

Max Risk: 8.102129

XY	X	Y	Offroad Risk	Haul Risk	Total Risk
7449041451	574490	4145130	0.013329091	0.000210508	0.01354
7448041451	574480	4145140	0.014763428	0.00021528	0.014979
7449041451	574490	4145140	0.016904688	0.000224036	0.017129
7449041451	574490	4145150	0.019168892	0.000229873	0.019399
7450041451	574500	4145150	0.021982925	0.000252003	0.022235
7446041451	574460	4145160	0.024537411	0.000238255	0.024776
7449041451	574490	4145160	0.026839181	0.000237321	0.027077
7450041451	574500	4145160	0.029349271	0.000237529	0.029587
7451041451	574510	4145160	0.032419435	0.000240672	0.03266
7446041451	574460	4145170	0.034475319	0.000234602	0.03471
7447041451	574470	4145170	0.035151506	0.000231393	0.035383
7448041451	574480	4145170	0.034700715	0.000231672	0.034932
7449041451	574490	4145170	0.034738281	0.000221112	0.034959
7450041451	574500	4145170	0.034038187	0.000199058	0.034237
7451041451	574510	4145170	0.032248681	0.0001958	0.032444
7452041451	574520	4145170	0.029940081	0.000190052	0.03013
7446041451	574460	4145180	0.026757219	0.000196141	0.026953
7447041451	574470	4145180	0.023984167	0.000186825	0.024171
7448041451	574480	4145180	0.014053089	0.000242247	0.014295
7449041451	574490	4145180	0.015507917	0.0002367	0.015745
7450041451	574500	4145180	0.018048743	0.000249371	0.018298
7451041451	574510	4145180	0.020876436	0.000273124	0.02115
7452041451	574520	4145180	0.024144676	0.000276835	0.024422
7453041451	574530	4145180	0.027662217	0.000268796	0.027931
7445041451	574450	4145190	0.031483701	0.000270899	0.031755
7446041451	574460	4145190	0.035667185	0.000272481	0.03594
7447041451	574470	4145190	0.04070444	0.000276537	0.040981
7448041451	574480	4145190	0.044713754	0.000271223	0.044985
7449041451	574490	4145190	0.046701336	0.000262681	0.046964
7450041451	574500	4145190	0.046694505	0.000263549	0.046958
7451041451	574510	4145190	0.046103695	0.00025562	0.046359
7452041451	574520	4145190	0.044963056	0.000230559	0.045194
7444041452	574440	4145200	0.041985098	0.000218652	0.042204
7445041452	574450	4145200	0.037996275	0.000213857	0.03821
7446041452	574460	4145200	0.033614716	0.000208778	0.033823
7447041452	574470	4145200	0.029349271	0.000200928	0.02955
7448041452	574480	4145200	0.014497051	0.000255359	0.014752
7449041452	574490	4145200	0.016300218	0.000262506	0.016563
7450041452	574500	4145200	0.018882024	0.000274547	0.019157
7451041452	574510	4145200	0.022235641	0.000291527	0.022527
7443041452	574430	4145210	0.02642937	0.000323836	0.026753
7444041452	574440	4145210	0.031521267	0.000328822	0.03185
7445041452	574450	4145210	0.036292146	0.00031007	0.036602
7446041452	574460	4145210	0.043726794	0.000317888	0.044045
7447041452	574470	4145210	0.051646384	0.000322235	0.051969
7448041452	574480	4145210	0.059234711	0.000322313	0.059557
7449041452	574490	4145210	0.064801305	0.00031042	0.065112
7450041452	574500	4145210	0.066385906	0.000306305	0.066692
7451041452	574510	4145210	0.065197455	0.000298671	0.065496
7443041452	574430	4145220	0.062902516	0.000266054	0.063169
7444041452	574440	4145220	0.057117356	0.000250953	0.057368
7445041452	574450	4145220	0.049949085	0.000237304	0.050186
7446041452	574460	4145220	0.042541758	0.000228283	0.04277
7447041452	574470	4145220	0.035820864	0.000217011	0.036038
7448041452	574480	4145220	0.015022974	0.000309183	0.015332
7449041452	574490	4145220	0.017034462	0.000292533	0.017327
7450041452	574500	4145220	0.019930457	0.00031172	0.020242
7451041452	574510	4145220	0.023769016	0.000368708	0.024138
7452041452	574520	4145220	0.028512574	0.000372052	0.028885
7453041452	574530	4145220	0.033853773	0.000348521	0.034202
7444041452	574440	4145230	0.042162683	0.00036282	0.042526
7445041452	574450	4145230	0.053931078	0.000383208	0.054314

Max GLC for Chronic Calcs

Max GLC: 0.254053

XY	X	Y	2025	2026	2027	2034	2035
57449041451	574490	4145130	0.0002645	0.0004218	0		
57448041451	574480	4145140	0.0002926	0.0004669	0		
57449041451	574490	4145140	0.0003346	0.0005342	0		
57449041451	574490	4145150	0.000379	0.0006053	0		
57450041451	574500	4145150	0.0004344	0.000694	0		
57446041451	574460	4145160	0.0004841	0.0007738	0		
57449041451	574490	4145160	0.0005291	0.000846	0		
57450041451	574500	4145160	0.0005782	0.0009247	0		
57451041451	574510	4145160	0.0006383	0.0010211	0		
57446041451	574460	4145170	0.0006784	0.0010854	0		
57447041451	574470	4145170	0.0006916	0.0011066	0		
57448041451	574480	4145170	0.0006828	0.0010924	0		
57449041451	574490	4145170	0.0006833	0.0010934	0		
57450041451	574500	4145170	0.0006692	0.0010711	0		
57451041451	574510	4145170	0.0006342	0.0010149	0		
57452041451	574520	4145170	0.0005889	0.0009424	0		
57446041451	574460	4145180	0.0005268	0.0008427	0		
57447041451	574470	4145180	0.0004724	0.0007555	0		
57448041451	574480	4145180	0.0002792	0.0004451	0		
57449041451	574490	4145180	0.0003075	0.0004906	0		
57450041451	574500	4145180	0.0003575	0.0005705	0		
57451041451	574510	4145180	0.0004132	0.0006597	0		
57452041451	574520	4145180	0.0004772	0.0007622	0		
57453041451	574530	4145180	0.0005458	0.0008724	0		
57445041451	574450	4145190	0.0006206	0.0009923	0		
57446041451	574460	4145190	0.0007024	0.0011235	0		
57447041451	574470	4145190	0.000801	0.0012815	0		
57448041451	574480	4145190	0.0008793	0.0014072	0		
57449041451	574490	4145190	0.000918	0.0014693	0		
57450041451	574500	4145190	0.0009179	0.0014691	0		
57451041451	574510	4145190	0.0009062	0.0014505	0		
57452041451	574520	4145190	0.0008834	0.0014142	0		
57444041452	574440	4145200	0.000825	0.0013206	0		
57445041452	574450	4145200	0.0007469	0.0011955	0		
57446041452	574460	4145200	0.0006611	0.001058	0		
57447041452	574470	4145200	0.0005776	0.0009241	0		
57448041452	574480	4145200	0.0002881	0.0004593	0		
57449041452	574490	4145200	0.0003235	0.000516	0		
57450041452	574500	4145200	0.0003742	0.0005971	0		
57451041452	574510	4145200	0.0004401	0.0007026	0		
57443041452	574430	4145210	0.0005227	0.0008347	0		
57444041452	574440	4145210	0.0006223	0.0009945	0		
57445041452	574450	4145210	0.0007153	0.0011438	0		
57446041452	574460	4145210	0.0008608	0.0013771	0		
57447041452	574470	4145210	0.0010158	0.0016255	0		
57448041452	574480	4145210	0.0011641	0.0018635	0		
57449041452	574490	4145210	0.0012728	0.0020378	0		
57450041452	574500	4145210	0.0013037	0.0020874	0		
57451041452	574510	4145210	0.0012803	0.00205	0		
57443041452	574430	4145220	0.0012348	0.0019775	0		
57444041452	574440	4145220	0.0011214	0.0017958	0		
57445041452	574450	4145220	0.000981	0.0015707	0		
57446041452	574460	4145220	0.000836	0.0013383	0		
57447041452	574470	4145220	0.0007044	0.0011273	0		
57448041452	574480	4145220	0.0002994	0.0004767	0		
57449041452	574490	4145220	0.0003384	0.0005395	0		
57450041452	574500	4145220	0.0003954	0.0006307	0		
57451041452	574510	4145220	0.0004715	0.0007521	0		
57452041452	574520	4145220	0.0005643	0.0009009	0		
57453041452	574530	4145220	0.0006683	0.001068	0		
57444041452	574440	4145230	0.000831	0.0013288	0		
57445041452	574450	4145230	0.0010615	0.0016983	0		

Garvey Reservoir Rehab -Unmitigated Administration Building and Water Quality Laboratory

Cancer Risk Summary & Maximum Annual GLC for Chronic Calculations

Cancer Risk Summary

Max Risk: 8.102129

XY	X	Y	Offroad Risk	Haul Risk	Total Risk
7446041452	574460	4145230	0.068226639	0.00038738	0.068614
7447041452	574470	4145230	0.082457313	0.000386214	0.082844
7448041452	574480	4145230	0.095199008	0.000377671	0.095577
7449041452	574490	4145230	0.103306428	0.000346342	0.103653
7450041452	574500	4145230	0.101216394	0.000352303	0.101569
7451041452	574510	4145230	0.095062404	0.000303	0.095365
7452041452	574520	4145230	0.082344615	0.000290708	0.082635
7444041452	574440	4145240	0.067912451	0.000273771	0.068186
7445041452	574450	4145240	0.054709718	0.000255562	0.054965
7446041452	574460	4145240	0.043812171	0.000243204	0.044055
7447041452	574470	4145240	0.015367898	0.000347	0.015715
7448041452	574480	4145240	0.017802857	0.000394192	0.018197
7449041452	574490	4145240	0.020787644	0.000383648	0.021171
7450041452	574500	4145240	0.024827694	0.00040503	0.025233
7451041452	574510	4145240	0.029813723	0.000383478	0.030197
7445041452	574450	4145250	0.036958088	0.000403302	0.037361
7446041452	574460	4145250	0.048303012	0.000442057	0.048745
7447041452	574470	4145250	0.064692022	0.00047208	0.065164
7448041452	574480	4145250	0.087607266	0.000466292	0.088074
7446041452	574460	4145260	0.117704441	0.000466932	0.118171
7447041452	574470	4145260	0.150714687	0.00046757	0.151182
7448041452	574480	4145260	0.177714377	0.000435026	0.178149
7447041452	574470	4145270	0.179831732	0.00042659	0.180258
7449041451	574490	4145130	0.156325677	0.000368135	0.156694
7448041451	574480	4145140	0.124524373	0.000339586	0.124864
7449041451	574490	4145140	0.095540517	0.000323176	0.095864
7449041451	574490	4145150	0.071071407	0.000288553	0.07136
7450041451	574500	4145150	0.053753493	0.000263072	0.054017
7446041451	574460	4145160	0.015579634	0.000383498	0.015963
7449041451	574490	4145160	0.018130705	0.000442947	0.018574
7450041451	574500	4145160	0.021378454	0.000468231	0.021847
7451041451	574510	4145160	0.025538032	0.000444303	0.025982
7446041451	574460	4145170	0.031097796	0.000439745	0.031538
7447041451	574470	4145170	0.319891343	0.000515566	0.320407
7448041451	574480	4145170	0.201042847	0.000406083	0.201449
7449041451	574490	4145170	0.120487738	0.000342318	0.12083
7450041451	574500	4145170	0.0821602	0.000303008	0.082463
7451041451	574510	4145170	0.064712513	0.000303511	0.065016
7452041451	574520	4145170	0.015576219	0.00040197	0.015978
7446041451	574460	4145180	0.018216082	0.000464518	0.018681
7447041451	574470	4145180	0.021556039	0.000502425	0.022058
7448041451	574480	4145180	0.025787333	0.000482731	0.02627
7449041451	574490	4145180	0.663452664	0.000608043	0.664061
7450041451	574500	4145180	0.296784854	0.000491032	0.297276
7451041451	574510	4145180	0.157090657	0.000407577	0.157498
7452041451	574520	4145180	0.114600126	0.000410562	0.115011
7453041451	574530	4145180	0.074691401	0.00037545	0.075067
7445041451	574450	4145190	0.015692332	0.000541891	0.016234
7446041451	574460	4145190	0.01812729	0.000513566	0.018641
7447041451	574470	4145190	0.021453586	0.000557309	0.022011
7448041451	574480	4145190	0.025961503	0.000603302	0.026565
7449041451	574490	4145190	2.116951908	0.001055183	2.118007
7450041451	574500	4145190	0.594017084	0.000833868	0.594851
7451041451	574510	4145190	0.25380938	0.000625607	0.254435
7452041451	574520	4145190	0.139035084	0.000488469	0.139524
7444041452	574440	4145200	0.086770569	0.00042339	0.087194
7445041452	574450	4145200	0.015548898	0.000653547	0.016202
7446041452	574460	4145200	0.018018007	0.000675013	0.018693
7447041452	574470	4145200	0.021293077	0.000734831	0.022028
7448041452	574480	4145200	0.025592673	0.000723557	0.026316
7449041452	574490	4145200	2.668816554	0.002307662	2.671124
7450041452	574500	4145200	0.740982004	0.001210536	0.742193

Max GLC for Chronic Calcs

Max GLC: 0.254053

XY	X	Y	2025	2026	2027	2034	2035
57446041452	574460	4145230	0.0013411	0.0021466	0		
57447041452	574470	4145230	0.0016194	0.0025929	0		
57448041452	574480	4145230	0.0018684	0.0029923	0		
57449041452	574490	4145230	0.0020264	0.003246	0		
57450041452	574500	4145230	0.0019856	0.0031806	0		
57451041452	574510	4145230	0.0018644	0.0029867	0		
57452041452	574520	4145230	0.0016155	0.0025876	0		
57444041452	574440	4145240	0.0013329	0.0021347	0		
57445041452	574450	4145240	0.0010744	0.0017204	0		
57446041452	574460	4145240	0.0008611	0.0013784	0		
57447041452	574470	4145240	0.0003068	0.0004883	0		
57448041452	574480	4145240	0.0003553	0.0005655	0		
57449041452	574490	4145240	0.0004135	0.0006589	0		
57450041452	574500	4145240	0.0004928	0.000786	0		
57451041452	574510	4145240	0.00059	0.0009419	0		
57445041452	574450	4145250	0.00073	0.0011663	0		
57446041452	574460	4145250	0.0009526	0.0015228	0		
57447041452	574470	4145250	0.0012736	0.0020373	0		
57448041452	574480	4145250	0.0017216	0.0027559	0		
57446041452	574460	4145260	0.0023101	0.0036997	0		
57447041452	574470	4145260	0.0029556	0.0047349	0		
57448041452	574480	4145260	0.0034829	0.0055811	0		
57447041452	574470	4145270	0.0035242	0.0056473	0		
57449041451	574490	4145130	0.0030635	0.0049091	0		
57448041451	574480	4145140	0.0024411	0.0039113	0		
57449041451	574490	4145140	0.0018741	0.003002	0		
57449041451	574490	4145150	0.001395	0.0022341	0		
57450041451	574500	4145150	0.0010559	0.0016905	0		
57446041451	574460	4145160	0.0003116	0.0004956	0		
57449041451	574490	4145160	0.0003626	0.0005766	0		
57450041451	574500	4145160	0.0004266	0.000679	0		
57451041451	574510	4145160	0.0005075	0.000809	0		
57446041451	574460	4145170	0.0006161	0.0009832	0		
57447041451	574470	4145170	0.0062645	0.0100412	0		
57448041451	574480	4145170	0.0039386	0.0063121	0		
57449041451	574490	4145170	0.0023622	0.0037847	0		
57450041451	574500	4145170	0.0016121	0.0025821	0		
57451041451	574510	4145170	0.0012709	0.0020349	0		
57452041451	574520	4145170	0.0003119	0.0004958	0		
57446041451	574460	4145180	0.0003646	0.0005797	0		
57447041451	574470	4145180	0.0004306	0.0006851	0		
57448041451	574480	4145180	0.000513	0.0008175	0		
57449041451	574490	4145180	0.0129842	0.020817	0		
57450041451	574500	4145180	0.0058123	0.0093161	0		
57451041451	574510	4145180	0.0030792	0.0049338	0		
57452041451	574520	4145180	0.0022484	0.0036013	0		
57453041451	574530	4145180	0.0014673	0.0023492	0		
57445041451	574450	4145190	0.0003167	0.000502	0		
57446041451	574460	4145190	0.0003638	0.0005778	0		
57447041451	574470	4145190	0.0004296	0.0006829	0		
57448041451	574480	4145190	0.0005186	0.0008251	0		
57449041451	574490	4145190	0.041414	0.0664071	0		
57450041451	574500	4145190	0.0116306	0.0186436	0		
57451041451	574510	4145190	0.0049744	0.0079709	0		
57452041451	574520	4145190	0.0027276	0.004369	0		
57444041452	574440	4145200	0.0017044	0.0027288	0		
57445041452	574450	4145200	0.0003159	0.0004995	0		
57446041452	574460	4145200	0.0003646	0.0005773	0		
57447041452	574470	4145200	0.0004297	0.0006811	0		
57448041452	574480	4145200	0.0005136	0.0008158	0		
57449041452	574490	4145200	0.0522279	0.0837364	0		
57450041452	574500	4145200	0.0145112	0.0232593	0		

Garvey Reservoir Rehab -Unmitigated Administration Building and Water Quality Laboratory

Cancer Risk Summary & Maximum Annual GLC for Chronic Calculations

Cancer Risk Summary

Max Risk: 8.102129

XY	X	Y	Offroad Risk	Haul Risk	Total Risk
7451041452(	574510	4145200	0.30630612	0.000826089	0.307132
7443041452:	574430	4145210	0.164921455	0.000609176	0.165531
7444041452:	574440	4145210	0.097941324	0.000499854	0.098441
7445041452:	574450	4145210	0.01466439	0.000777282	0.015442
7446041452:	574460	4145210	0.017584291	0.000764905	0.018349
7447041452:	574470	4145210	0.020712512	0.000858647	0.021571
7448041452:	574480	4145210	0.024817448	0.000888542	0.025706
7449041452:	574490	4145210	1.376625601	0.018340726	1.394966
7450041452:	574500	4145210	1.189328486	0.003600294	1.192929
7451041452:	574510	4145210	0.630415097	0.001643646	0.632059
7443041452:	574430	4145220	0.311343376	0.001029884	0.312373
7444041452:	574440	4145220	0.174176345	0.000737745	0.174914
7445041452:	574450	4145220	0.110618133	0.000567951	0.111186
7446041452:	574460	4145220	0.013629618	0.000916037	0.014546
7447041452:	574470	4145220	0.017051537	0.00095383	0.018005
7448041452:	574480	4145220	0.019940702	0.001064946	0.021006
7449041452:	574490	4145220	0.023734865	0.001148952	0.024884
7450041452:	574500	4145220	0.36976188	0.028792782	0.398555
7451041452:	574510	4145220	0.555525621	0.012950111	0.568476
7452041452:	574520	4145220	0.577832979	0.004178698	0.582012
7453041452:	574530	4145220	0.429638628	0.002006106	0.431645
7444041452:	574440	4145230	0.276249926	0.001215984	0.277466
7445041452:	574450	4145230	0.174306119	0.000854856	0.175161
7446041452:	574460	4145230	0.116847254	0.000614929	0.117462
7447041452:	574470	4145230	0.013096865	0.001123853	0.014221
7448041452:	574480	4145230	0.016228501	0.001211166	0.01744
7449041452:	574490	4145230	0.018175101	0.001342466	0.019518
7450041452:	574500	4145230	0.022379075	0.001503251	0.023882
7451041452:	574510	4145230	0.147777711	0.005351417	0.153129
7452041452:	574520	4145230	0.220457625	0.029226262	0.249684
7444041452(	574440	4145240	0.294076688	0.01184089	0.305918
7445041452(	574450	4145240	0.313310467	0.003850943	0.317161
7446041452(	574460	4145240	0.277598886	0.002301906	0.279901
7447041452(	574470	4145240	0.208569702	0.001428397	0.209998
7448041452(	574480	4145240	0.152121703	0.000903685	0.153025
7449041452(	574490	4145240	0.108794475	0.000704482	0.109499
7450041452(	574500	4145240	0.013674014	0.00143005	0.015104
7451041452(	574510	4145240	0.014076995	0.001612017	0.015689
7445041452!	574450	4145250	0.016163614	0.001739162	0.017903
7446041452!	574460	4145250	0.020886681	0.002088393	0.022975
7447041452!	574470	4145250	0.024363242	0.00204528	0.026409
7448041452!	574480	4145250	0.046117356	0.002617346	0.048735
7446041452(	574460	4145260	0.059627446	0.003039091	0.062667
7447041452(	574470	4145260	0.078717791	0.003755999	0.082474
7448041452(	574480	4145260	0.107100591	0.006430831	0.113531
7447041452:	574470	4145270	0.143829869	0.028351612	0.172181
7449041451:	574490	4145130	0.181115805	0.011875333	0.192991
7448041451(	574480	4145140	0.190807826	0.003805116	0.194613
7449041451(	574490	4145140	0.186836078	0.002277751	0.189114
7449041451!	574490	4145150	0.15699162	0.001514271	0.158506
7450041451!	574500	4145150	0.122400188	0.001077606	0.123478
7446041451(	574460	4145160	0.094420368	0.000786803	0.095207
7449041451(	574490	4145160	0.013008072	0.002512242	0.01552
7450041451(	574500	4145160	0.014725862	0.002868202	0.017594
7451041451(	574510	4145160	0.015398634	0.002785054	0.018184
7446041451:	574460	4145170	0.019343061	0.003419169	0.022762
7447041451:	574470	4145170	0.022573735	0.003456473	0.02603
7448041451:	574480	4145170	0.026723068	0.003528897	0.030252
7449041451:	574490	4145170	0.032118908	0.00366206	0.035781
7450041451:	574500	4145170	0.039410122	0.004067017	0.043477
7451041451:	574510	4145170	0.049221671	0.004451788	0.053673
7452041451:	574520	4145170	0.062506365	0.005164033	0.06767

Max GLC for Chronic Calcs

Max GLC: 0.254053

XY	X	Y	2025	2026	2027	2034	2035
574510414520	574510	4145200	0.0060045	0.0096208	0		
574430414520	574430	4145210	0.003236	0.005183	0		
574440414520	574440	4145210	0.0019242	0.0030805	0		
574450414520	574450	4145210	0.0003009	0.000474	0		
574460414520	574460	4145210	0.0003578	0.0005654	0		
574470414520	574470	4145210	0.0004206	0.0006652	0		
574480414520	574480	4145210	0.0005014	0.0007944	0		
574490414520	574490	4145210	0.0272522	0.0435049	0		
574500414520	574500	4145210	0.0233216	0.037363	0		
574510414520	574510	4145210	0.012357	0.0197998	0		
574430414522	574430	4145220	0.0061067	0.0097825	0		
574440414522	574440	4145220	0.0034193	0.0054756	0		
574450414522	574450	4145220	0.0021734	0.0034793	0		
574460414522	574460	4145220	0.0002832	0.0004441	0		
574470414522	574470	4145220	0.0003508	0.0005521	0		
574480414522	574480	4145220	0.0004093	0.0006447	0		
574490414522	574490	4145220	0.000485	0.0007652	0		
574500414522	574500	4145220	0.0077542	0.0121197	0		
574510414522	574510	4145220	0.0110984	0.017657	0		
574520414522	574520	4145220	0.011375	0.018197	0		
574530414522	574530	4145220	0.0084376	0.01351	0		
574440414523	574440	4145230	0.0054239	0.0086854	0		
574450414523	574450	4145230	0.0034239	0.0054818	0		
574460414523	574460	4145230	0.002296	0.0036755	0		
574470414523	574470	4145230	0.0002765	0.0004312	0		
574480414523	574480	4145230	0.0003394	0.000531	0		
574490414523	574490	4145230	0.0003798	0.0005944	0		
574500414523	574500	4145230	0.000465	0.0007292	0		
574510414523	574510	4145230	0.002987	0.0047317	0		
574520414523	574520	4145230	0.0048426	0.0074453	0		
574440414524	574440	4145240	0.0059658	0.0094377	0		
574450414524	574450	4145240	0.0061965	0.0098955	0		
574460414524	574460	4145240	0.00547	0.0087474	0		
574470414524	574470	4145240	0.0041044	0.0065668	0		
574480414524	574480	4145240	0.002991	0.004787	0		
574490414524	574490	4145240	0.0021402	0.0034246	0		
574500414524	574500	4145240	0.0002934	0.0004548	0		
574510414524	574510	4145240	0.0003046	0.0004708	0		
574450414525	574450	4145250	0.0003477	0.0005385	0		
574460414525	574460	4145250	0.0004464	0.000693	0		
574470414525	574470	4145250	0.0005136	0.0008012	0		
574480414525	574480	4145250	0.0009494	0.0014939	0		
574460414526	574460	4145260	0.0012212	0.0019252	0		
574470414526	574470	4145260	0.0016076	0.0025369	0		
574480414526	574480	4145260	0.0022112	0.0034757	0		
574470414527	574470	4145270	0.0033283	0.0050264	0		
574490414513	574490	4145130	0.0037576	0.0058959	0		
574480414514	574480	4145140	0.0038003	0.006053	0		
574490414514	574490	4145140	0.0036948	0.0059006	0		
574490414515	574490	4145150	0.0030974	0.0049508	0		
574500414515	574500	4145150	0.002413	0.0038581	0		
574460414516	574460	4145160	0.0018606	0.0029754	0		
574490414516	574490	4145160	0.0003001	0.0004536	0		
574500414516	574500	4145160	0.0003401	0.000514	0		
574510414516	574510	4145160	0.0003518	0.0005336	0		
574460414517	574460	4145170	0.0004404	0.0006688	0		
574470414517	574470	4145170	0.0005043	0.0007708	0		
574480414517	574480	4145170	0.0005867	0.0009022	0		
574490414517	574490	4145170	0.0006947	0.0010739	0		
574500414517	574500	4145170	0.0008446	0.0013099	0		
574510414517	574510	4145170	0.0010435	0.0016246	0		
574520414517	574520	4145170	0.0013162	0.0020542	0		

Garvey Reservoir Rehab -Unmitigated Administration Building and Water Quality Laboratory

Cancer Risk Summary & Maximum Annual GLC for Chronic Calculations

Cancer Risk Summary

Max Risk: 8.102129

XY	X	Y	Offroad Risk	Haul Risk	Total Risk
7446041451	574460	4145180	0.079489601	0.008105052	0.087595
7447041451	574470	4145180	0.122393358	0.010777998	0.133171
7448041451	574480	4145180	0.134315432	0.004342501	0.138658
7449041451	574490	4145180	0.132010247	0.0023681	0.134378
7450041451	574500	4145180	0.118213289	0.001551541	0.119765
7451041451	574510	4145180	0.098624342	0.001144391	0.099769
7452041451	574520	4145180	0.080264826	0.000840314	0.081105
7453041451	574530	4145180	0.012386526	0.007294835	0.019681
7445041451	574450	4145190	0.013858429	0.009064351	0.022923
7446041451	574460	4145190	0.014818069	0.006645186	0.021463
7447041451	574470	4145190	0.017877988	0.008683399	0.026561
7448041451	574480	4145190	0.020528097	0.009298762	0.029827
7449041451	574490	4145190	0.023922695	0.0092955	0.033218
7450041451	574500	4145190	0.028307669	0.009615708	0.037923
7451041451	574510	4145190	0.033969886	0.009997204	0.043967
7452041451	574520	4145190	0.041168892	0.010243751	0.051413
7444041452	574440	4145200	0.050294009	0.011035736	0.06133
7445041452	574450	4145200	0.061222292	0.013289749	0.074512
7446041452	574460	4145200	0.074787024	0.042387759	0.117175
7447041452	574470	4145200	0.087402361	0.014727886	0.10213
7448041452	574480	4145200	0.095342442	0.005180121	0.100523
7449041452	574490	4145200	0.09605278	0.002778235	0.098831
7450041452	574500	4145200	0.089659734	0.001747285	0.091407
7451041452	574510	4145200	0.078775847	0.001196211	0.079972
7443041452	574430	4145210	0.067147471	0.000870765	0.068018
7444041452	574440	4145210	0.011672773	0.029369766	0.041043
7445041452	574450	4145210	0.013038808	0.037825057	0.050864
7446041452	574460	4145210	0.014558522	0.037038289	0.051597
7447041452	574470	4145210	0.016525613	0.040800513	0.057326
7448041452	574480	4145210	0.018800062	0.038480544	0.057281
7449041452	574490	4145210	0.021552624	0.041806858	0.063359
7450041452	574500	4145210	0.025141882	0.040462691	0.065605
7451041452	574510	4145210	0.02990593	0.039305393	0.069211
7443041452	574430	4145220	0.035312015	0.037795379	0.073107
7444041452	574440	4145220	0.041459175	0.038210201	0.079669
7445041452	574450	4145220	0.048873332	0.039272315	0.088146
7446041452	574460	4145220	0.057564732	0.041258729	0.098823
7447041452	574470	4145220	0.065347719	0.020286548	0.085634
7448041452	574480	4145220	0.071003106	0.005429056	0.076432
7449041452	574490	4145220	0.072645763	0.002776107	0.075422
7450041452	574500	4145220	0.069346788	0.001721991	0.071069
7451041452	574510	4145220	0.063230364	0.00119032	0.064421
7452041452	574520	4145220	0.056075754	0.000880977	0.056957
7453041452	574530	4145220	0.022761565	0.000395939	0.023158
7444041452	574440	4145230	0.024906241	0.000405398	0.025312
7445041452	574450	4145230	0.027177275	0.000377862	0.027555
7446041452	574460	4145230	0.030056194	0.000388786	0.030445
7447041452	574470	4145230	0.032699473	0.000373396	0.033073
7448041452	574480	4145230	0.036428749	0.000382094	0.036811
7449041452	574490	4145230	0.041752872	0.000399325	0.042152
7450041452	574500	4145230	0.046831109	0.000402681	0.047234
7451041452	574510	4145230	0.053920833	0.000425373	0.054346
7452041452	574520	4145230	0.062226328	0.000437762	0.062664
7444041452	574440	4145240	0.071358275	0.000436553	0.071795
7445041452	574450	4145240	0.081716238	0.000433654	0.08215
7446041452	574460	4145240	0.093013351	0.000431828	0.093445
7447041452	574470	4145240	0.104600747	0.000434033	0.105035
7448041452	574480	4145240	0.116027633	0.000434563	0.116462
7449041452	574490	4145240	0.126996897	0.000428849	0.127426
7450041452	574500	4145240	0.135961505	0.000419749	0.136381
7451041452	574510	4145240	0.142678984	0.000395873	0.143075
7445041452	574450	4145250	0.14371034	0.000396032	0.144106

Max GLC for Chronic Calcs

Max GLC: 0.254053

XY	X	Y	2025	2026	2027	2034	2035
574460414518	574460	4145180	0.0017018	0.0026403	0		
574470414518	574470	4145180	0.0025894	0.0040344	0		
574480414518	574480	4145180	0.0027054	0.0042912	0		
574490414518	574490	4145180	0.0026244	0.0041829	0		
574500414518	574500	4145180	0.0023398	0.0037354	0		
574510414518	574510	4145180	0.0019493	0.0031137	0		
574520414518	574520	4145180	0.0015848	0.0025324	0		
574530414518	574530	4145180	0.0003749	0.0005212	0		
574450414519	574450	4145190	0.0004359	0.0005995	0		
574460414519	574460	4145190	0.0004107	0.0005856	0		
574470414519	574470	4145190	0.0005076	0.0007186	0		
574480414519	574480	4145190	0.0005706	0.000813	0		
574490414519	574490	4145190	0.0006369	0.0009193	0		
574500414519	574500	4145190	0.0007285	0.0010627	0		
574510414519	574510	4145190	0.0008461	0.0012472	0		
574520414519	574520	4145190	0.0009914	0.0014774	0		
574440414520	574440	4145200	0.0011842	0.001778	0		
574450414520	574450	4145200	0.0014389	0.0021617	0		
574460414520	574460	4145200	0.0022336	0.0031166	0		
574470414520	574470	4145200	0.001977	0.0030089	0		
574480414520	574480	4145200	0.0019586	0.0030842	0		
574490414520	574490	4145200	0.0019288	0.0030628	0		
574500414520	574500	4145200	0.001785	0.0028435	0		
574510414520	574510	4145200	0.0015621	0.0024922	0		
574430414521	574430	4145210	0.0013288	0.0021216	0		
574440414521	574440	4145210	0.0007626	0.0009004	0		
574450414521	574450	4145210	0.0009432	0.0010971	0		
574460414521	574460	4145210	0.0009586	0.0011305	0		
574470414521	574470	4145210	0.0010655	0.0012606	0		
574480414521	574480	4145210	0.0010678	0.0012897	0		
574490414521	574490	4145210	0.0011821	0.0014366	0		
574500414521	574500	4145210	0.0012278	0.0015247	0		
574510414521	574510	4145210	0.0012999	0.001653	0		
574430414522	574430	4145220	0.0013782	0.0017951	0		
574440414522	574440	4145220	0.0015059	0.0019954	0		
574450414522	574450	4145220	0.0016702	0.0022472	0		
574460414522	574460	4145220	0.0018763	0.0025559	0		
574470414522	574470	4145220	0.0016469	0.0024184	0		
574480414522	574480	4145220	0.0014872	0.0023254	0		
574490414522	574490	4145220	0.001471	0.0023287	0		
574500414522	574500	4145220	0.0013873	0.0022061	0		
574510414522	574510	4145220	0.0012581	0.0020046	0		
574520414522	574520	4145220	0.0011125	0.0017746	0		
574530414522	574530	4145220	0.0004523	0.000721	0		
574440414523	574440	4145230	0.0004944	0.0007884	0		
574450414523	574450	4145230	0.0005383	0.0008592	0		
574460414523	574460	4145230	0.0005948	0.0009496	0		
574470414523	574470	4145230	0.0006462	0.0010323	0		
574480414523	574480	4145230	0.0007193	0.0011494	0		
574490414523	574490	4145230	0.0008237	0.0013166	0		
574500414523	574500	4145230	0.0009231	0.001476	0		
574510414523	574510	4145230	0.0010621	0.0016987	0		
574520414523	574520	4145230	0.0012247	0.0019594	0		
574440414524	574440	4145240	0.0014033	0.0022457	0		
574450414524	574450	4145240	0.0016058	0.0025705	0		
574460414524	574460	4145240	0.0018266	0.0029248	0		
574470414524	574470	4145240	0.0020533	0.0032882	0		
574480414524	574480	4145240	0.0022767	0.0036465	0		
574490414524	574490	4145240	0.0024911	0.0039904	0		
574500414524	574500	4145240	0.0026662	0.0042714	0		
574510414524	574510	4145240	0.0027971	0.0044816	0		
574450414525	574450	4145250	0.0028173	0.004514	0		

Garvey Reservoir Rehab -Unmitigated Administration Building and Water Quality Laboratory

Cancer Risk Summary & Maximum Annual GLC for Chronic Calculations

Cancer Risk Summary

Max Risk: 8.102129

XY	X	Y	Offroad Risk	Haul Risk	Total Risk
7446041452	574460	4145250	0.140506987	0.000394719	0.140902
7447041452	574470	4145250	0.134745733	0.000384116	0.13513
7448041452	574480	4145250	0.126812482	0.000339368	0.127152
7446041452	574460	4145260	0.116092519	0.000328068	0.116421
7447041452	574470	4145260	0.023185036	0.000422954	0.023608
7448041452	574480	4145260	0.025329712	0.000407476	0.025737
7447041452	574470	4145270	0.027699783	0.000385918	0.028086
7449041451	574490	4145130	0.030418194	0.000390589	0.030809
7448041451	574480	4145140	0.033846942	0.000400872	0.034248
7449041451	574490	4145140	0.03817386	0.000412909	0.038587
7449041451	574490	4145150	0.043921454	0.000445393	0.044367
7450041451	574500	4145150	0.050136915	0.000456222	0.050593
7446041451	574460	4145160	0.058121392	0.000476663	0.058598
7449041451	574490	4145160	0.067618753	0.000483472	0.068102
7450041451	574500	4145160	0.078926111	0.000483254	0.079409
7451041451	574510	4145160	0.092531824	0.000477307	0.093009
7446041451	574460	4145170	0.108302703	0.000474638	0.108777
7447041451	574470	4145170	0.125869918	0.000479084	0.126349
7448041451	574480	4145170	0.144348962	0.000482548	0.144832
7449041451	574490	4145170	0.162865572	0.00048038	0.163346
7450041451	574500	4145170	0.179213601	0.000474366	0.179688
7451041451	574510	4145170	0.192730521	0.000448107	0.193179
7452041451	574520	4145170	0.197439928	0.00043722	0.197877
7446041451	574460	4145180	0.193239369	0.000438616	0.193678
7447041451	574470	4145180	0.18264235	0.000429636	0.183072
7448041451	574480	4145180	0.163855948	0.000374391	0.16423
7449041451	574490	4145180	0.147941635	0.000363119	0.148305
7450041451	574500	4145180	0.02353679	0.000451564	0.023988
7451041451	574510	4145180	0.02583173	0.00044869	0.02628
7452041451	574520	4145180	0.028109594	0.000406916	0.028517
7453041451	574530	4145180	0.031176343	0.0004186	0.031595
7445041451	574450	4145190	0.03489196	0.000431211	0.035323
7446041451	574460	4145190	0.040209252	0.00048097	0.04069
7447041451	574470	4145190	0.046021733	0.000503854	0.046526
7448041451	574480	4145190	0.053056815	0.000517059	0.053574
7449041451	574490	4145190	0.061843838	0.000529947	0.062374
7450041451	574500	4145190	0.072809687	0.00053617	0.073346
7451041451	574510	4145190	0.086466626	0.000537786	0.087004
7452041451	574520	4145190	0.103572805	0.000532247	0.104105
7444041452	574440	4145200	0.124493637	0.000527999	0.125022
7445041452	574450	4145200	0.150485876	0.000539391	0.151025
7446041452	574460	4145200	0.179483393	0.000549307	0.180033
7447041452	574470	4145200	0.213173241	0.000542046	0.213715
7448041452	574480	4145200	0.246699165	0.000521131	0.24722
7449041452	574490	4145200	0.269918352	0.000493664	0.270412
7450041452	574500	4145200	0.274839495	0.000470643	0.27531
7451041452	574510	4145200	0.282154614	0.000489597	0.282644
7443041452	574430	4145210	0.233277867	0.0004615	0.233739
7444041452	574440	4145210	0.191811862	0.000394426	0.192206
7445041452	574450	4145210	0.023796337	0.000477495	0.024274
7446041452	574460	4145210	0.025855635	0.000424517	0.02628
7447041452	574470	4145210	0.0285638	0.000435674	0.028999
7448041452	574480	4145210	0.03199938	0.000455405	0.032455
7449041452	574490	4145210	0.333797583	0.000500699	0.334298
7450041452	574500	4145210	0.244793546	0.000435104	0.245229
7451041452	574510	4145210	0.023970506	0.000506907	0.024477
7443041452	574430	4145220	0.026094691	0.000455633	0.02655
7444041452	574440	4145220	0.028966781	0.000471954	0.029439
7445041452	574450	4145220	0.446188147	0.000532007	0.44672
7446041452	574460	4145220	0.327964612	0.000486328	0.328451
7447041452	574470	4145220	0.023891959	0.000497308	0.024389
7448041452	574480	4145220	0.026275691	0.000495156	0.026771

Max GLC for Chronic Calcs

Max GLC: 0.254053

XY	X	Y	2025	2026	2027	2034	2035
57446041452	574460	4145250	0.0027547	0.0044135	0		
57447041452	574470	4145250	0.0026418	0.0042326	0		
57448041452	574480	4145250	0.0024859	0.003983	0		
57446041452	574460	4145260	0.002276	0.0036466	0		
57447041452	574470	4145260	0.0004611	0.0007348	0		
57448041452	574480	4145260	0.0005027	0.0008018	0		
57447041452	574470	4145270	0.0005487	0.0008757	0		
57449041451	574490	4145130	0.0006019	0.000961	0		
57448041451	574480	4145140	0.0006691	0.0010687	0		
57449041451	574490	4145140	0.000754	0.0012047	0		
57449041451	574490	4145150	0.0008669	0.0013855	0		
57450041451	574500	4145150	0.0009887	0.0015806	0		
57446041451	574460	4145160	0.0011452	0.0018314	0		
57449041451	574490	4145160	0.001331	0.0021293	0		
57450041451	574500	4145160	0.0015521	0.0024839	0		
57451041451	574510	4145160	0.001818	0.0029105	0		
57446041451	574460	4145170	0.0021264	0.003405	0		
57447041451	574470	4145170	0.00247	0.003956	0		
57448041451	574480	4145170	0.0028314	0.0045356	0		
57449041451	574490	4145170	0.0031934	0.0051162	0		
57450041451	574500	4145170	0.003513	0.0056288	0		
57451041451	574510	4145170	0.0037768	0.0060522	0		
57452041451	574520	4145170	0.0038687	0.0061997	0		
57446041451	574460	4145180	0.0037866	0.006068	0		
57447041451	574470	4145180	0.0035792	0.0057355	0		
57448041451	574480	4145180	0.0032108	0.0051454	0		
57449041451	574490	4145180	0.0028995	0.0046461	0		
57450041451	574500	4145180	0.0004685	0.0007463	0		
57451041451	574510	4145180	0.0005133	0.0008183	0		
57452041451	574520	4145180	0.0005571	0.0008889	0		
57453041451	574530	4145180	0.0006172	0.0009853	0		
57445041451	574450	4145190	0.0006901	0.0011021	0		
57446041451	574460	4145190	0.000795	0.0012697	0		
57447041451	574470	4145190	0.0009091	0.0014524	0		
57448041451	574480	4145190	0.0010469	0.0016733	0		
57449041451	574490	4145190	0.0012189	0.0019491	0		
57450041451	574500	4145190	0.0014335	0.0022931	0		
57451041451	574510	4145190	0.0017006	0.0027214	0		
57452041451	574520	4145190	0.0020349	0.0032577	0		
57444041452	574440	4145200	0.002444	0.0039137	0		
57445041452	574450	4145200	0.0029524	0.0047291	0		
57446041452	574460	4145200	0.0035196	0.0056386	0		
57447041452	574470	4145200	0.0041782	0.006695	0		
57448041452	574480	4145200	0.0048334	0.007746	0		
57449041452	574490	4145200	0.005287	0.0084737	0		
57450041452	574500	4145200	0.0053828	0.0086276	0		
57451041452	574510	4145200	0.0055262	0.0088573	0		
57443041452	574430	4145210	0.0045699	0.007324	0		
57444041452	574440	4145210	0.0037579	0.0060224	0		
57445041452	574450	4145210	0.000474	0.0007549	0		
57446041452	574460	4145210	0.0005133	0.0008186	0		
57447041452	574470	4145210	0.0005665	0.0009037	0		
57448041452	574480	4145210	0.000634	0.0010118	0		
57449041452	574490	4145210	0.0065362	0.010477	0		
57450041452	574500	4145210	0.0047946	0.0076847	0		
57451041452	574510	4145210	0.0004779	0.0007609	0		
57443041452	574430	4145220	0.0005185	0.0008266	0		
57444041452	574440	4145220	0.000575	0.000917	0		
57445041452	574450	4145220	0.0087344	0.0140022	0		
57446041452	574460	4145220	0.0064219	0.0102939	0		
57447041452	574470	4145220	0.0004762	0.0007583	0		
57448041452	574480	4145220	0.0005228	0.000833	0		

Garvey Reservoir Rehab -Unmitigated Administration Building and Water Quality Laboratory

Cancer Risk Summary & Maximum Annual GLC for Chronic Calculations

Cancer Risk Summary

Max Risk: 8.102129

XY	X	Y	Offroad Risk	Haul Risk	Total Risk
7449041452	574490	4145220	0.668684579	0.000611399	0.669296
7450041452	574500	4145220	0.437660671	0.00055413	0.438215
7451041452	574510	4145220	0.023909035	0.000536125	0.024445
7452041452	574520	4145220	0.026391804	0.000553965	0.026946
7453041452	574530	4145220	1.204771516	0.000816253	1.205588
7444041452	574440	4145230	0.722332205	0.000763817	0.723096
7445041452	574450	4145230	0.023888544	0.000591221	0.02448
7446041452	574460	4145230	0.02640888	0.000621398	0.02703
7447041452	574470	4145230	2.002997234	0.001098669	2.004096
7448041452	574480	4145230	1.015589272	0.001011837	1.016601
7449041452	574490	4145230	0.02392611	0.000736189	0.024662
7450041452	574500	4145230	0.026238125	0.000678123	0.026916
7451041452	574510	4145230	8.099797692	0.002330818	8.102129
7452041452	574520	4145230	2.649285663	0.0016886	2.650974
7444041452	574440	4145240	1.190489616	0.001274087	1.191764
7445041452	574450	4145240	0.023669979	0.000793136	0.024463
7446041452	574460	4145240	0.025961503	0.000742338	0.026704
7447041452	574470	4145240	5.583802934	0.013815811	5.597619
7448041452	574480	4145240	3.875220483	0.003990688	3.879211
7449041452	574490	4145240	2.201557311	0.00228659	2.203844
7450041452	574500	4145240	1.180172634	0.00157437	1.181747
7451041452	574510	4145240	0.023331885	0.000858423	0.02419
7445041452	574450	4145250	0.025585843	0.000820837	0.026407
7446041452	574460	4145250	2.305539927	0.020126473	2.325666
7447041452	574470	4145250	1.902265783	0.00511808	1.907384
7448041452	574480	4145250	1.370570649	0.002759511	1.37333
7446041452	574460	4145260	0.924027334	0.0018719	0.925899
7447041452	574470	4145260	0.022894754	0.000918881	0.023814
7448041452	574480	4145260	0.025117976	0.000914523	0.026032
7447041452	574470	4145270	0.994927987	0.053319368	1.048247
7457041450	574570	4145030	1.240240626	0.014114457	1.254355
7463041450	574630	4145080	1.263446152	0.006220716	1.269667
7461041450	574610	4145090	1.065149037	0.0034294	1.068578
7462041450	574620	4145090	0.794069555	0.002225165	0.796295
7463041450	574630	4145090	0.022454207	0.001041192	0.023495
7464041450	574640	4145090	0.024578392	0.001033423	0.025612
7460041451	574600	4145100	0.027156784	0.001101632	0.028258
7461041451	574610	4145100	0.491786409	0.043318423	0.535105
7462041451	574620	4145100	0.643494886	0.031934429	0.675429
7463041451	574630	4145100	0.768767164	0.011762819	0.78053
7464041451	574640	4145100	0.804693895	0.006184959	0.810879
7465041451	574650	4145100	0.738868064	0.003719382	0.742587
7459041451	574590	4145110	0.615706311	0.002471055	0.618177
7460041451	574600	4145110	0.021918038	0.001157031	0.023075
7461041451	574610	4145110	0.023953431	0.001177732	0.025131
7462041451	574620	4145110	0.026378144	0.00123442	0.027613
7463041451	574630	4145110	0.28159454	0.010413662	0.292008
7464041451	574640	4145110	0.360633349	0.041246554	0.40188
7465041451	574650	4145110	0.447878615	0.031945081	0.479824
7466041451	574660	4145110	0.520582435	0.011323491	0.531906
7460041451	574600	4145120	0.550030743	0.006195417	0.556226
7461041451	574610	4145120	0.527959026	0.003917648	0.531877
7462041451	574620	4145120	0.467573431	0.002690922	0.470264
7463041451	574630	4145120	0.021371624	0.001313176	0.022685
7464041451	574640	4145120	0.023277243	0.001352324	0.02463
7465041451	574650	4145120	0.025534617	0.001401074	0.026936
7466041451	574660	4145120	0.177536792	0.005610188	0.183147
7460041451	574600	4145130	0.223169205	0.010924542	0.234094
7462041451	574620	4145130	0.274556042	0.041450569	0.316007
7463041451	574630	4145130	0.328258309	0.031189438	0.359448
7464041451	574640	4145130	0.374642042	0.010467064	0.385109
7465041451	574650	4145130	0.399319472	0.005727713	0.405047

Max GLC for Chronic Calcs

Max GLC: 0.254053

XY	X	Y	2025	2026	2027	2034	2035
57449041452	574490	4145220	0.0130866	0.0209812	0		
57450041452	574500	4145220	0.0085681	0.0137352	0		
57451041452	574510	4145220	0.0004773	0.0007595	0		
57452041452	574520	4145220	0.0005261	0.0008377	0		
57453041452	574530	4145220	0.0235729	0.0377966	0		
57444041452	574440	4145230	0.0141384	0.0226663	0		
57445041452	574450	4145230	0.0004779	0.0007599	0		
57446041452	574460	4145230	0.0005277	0.0008395	0		
57447041452	574470	4145230	0.0391865	0.0628343	0		
57448041452	574480	4145230	0.0198772	0.0318674	0		
57449041452	574490	4145230	0.0004812	0.0007637	0		
57450041452	574500	4145230	0.0005254	0.0008352	0		
57451041452	574510	4145230	0.1584256	0.2540532	0		
57452041452	574520	4145230	0.0518348	0.0831127	0		
57444041452	574440	4145240	0.023302	0.0373571	0		
57445041452	574450	4145240	0.0004773	0.0007567	0		
57446041452	574460	4145240	0.0005212	0.0008277	0		
57447041452	574470	4145240	0.1094369	0.1753602	0		
57448041452	574480	4145240	0.0758485	0.1216	0		
57449041452	574490	4145240	0.0430908	0.0690827	0		
57450041452	574500	4145240	0.0231057	0.037039	0		
57451041452	574510	4145240	0.0004718	0.0007473	0		
57445041452	574450	4145250	0.0005152	0.0008173	0		
57446041452	574460	4145250	0.0454486	0.0726682	0		
57447041452	574470	4145250	0.03729	0.0597484	0		
57448041452	574480	4145250	0.0268503	0.0430315	0		
57446041452	574460	4145260	0.0181025	0.0290117	0		
57447041452	574470	4145260	0.0004644	0.0007347	0		
57448041452	574480	4145260	0.0005078	0.0008043	0		
57447041452	574470	4145270	0.0204249	0.0321712	0		
57457041450	574570	4145030	0.0245084	0.0391509	0		
57463041450	574630	4145080	0.0248186	0.039735	0		
57461041450	574610	4145090	0.0208903	0.0334656	0		
57462041450	574620	4145090	0.0155677	0.0249426	0		
57463041450	574630	4145090	0.000458	0.0007231	0		
57464041450	574640	4145090	0.0004994	0.0007896	0		
57460041451	574600	4145100	0.0005511	0.0008717	0		
57461041451	574610	4145100	0.0104045	0.0162107	0		
57462041451	574620	4145100	0.0131639	0.0207611	0		
57463041451	574630	4145100	0.0152465	0.0243227	0		
57464041451	574640	4145100	0.0158475	0.0253478	0		
57465041451	574650	4145100	0.0145155	0.0232387	0		
57459041451	574590	4145110	0.0120845	0.0193536	0		
57460041451	574600	4145110	0.0004496	0.0007084	0		
57461041451	574610	4145110	0.0004898	0.0007726	0		
57462041451	574620	4145110	0.0005383	0.0008497	0		
57463041451	574630	4145110	0.0056958	0.0090203	0		
57464041451	574640	4145110	0.0078023	0.01206	0		
57465041451	574650	4145110	0.009339	0.0146268	0		
57466041451	574660	4145110	0.0103855	0.0165316	0		
57460041451	574600	4145120	0.010868	0.0173618	0		
57461041451	574610	4145120	0.010395	0.0166281	0		
57462041451	574620	4145120	0.0091919	0.0147121	0		
57463041451	574630	4145120	0.0004418	0.0006941	0		
57464041451	574640	4145120	0.0004798	0.0007546	0		
57465041451	574650	4145120	0.0005248	0.0008263	0		
57466041451	574660	4145120	0.0035736	0.0056697	0		
57460041451	574600	4145130	0.0045626	0.0071974	0		
57462041451	574620	4145130	0.0061228	0.0093643	0		
57463041451	574630	4145130	0.0069862	0.0108617	0		
57464041451	574640	4145130	0.0075162	0.0119393	0		
57465041451	574650	4145130	0.0079125	0.0126269	0		

Garvey Reservoir Rehab -Unmitigated Administration Building and Water Quality Laboratory

Cancer Risk Summary & Maximum Annual GLC for Chronic Calculations

Cancer Risk Summary

Max Risk: 8.102129

XY	X	Y	Offroad Risk	Haul Risk	Total Risk
7463041451	574630	4145140	0.392424408	0.00405591	0.39648
7464041451	574640	4145140	0.361862781	0.002848383	0.364711
7459041451	574590	4145150	0.020746663	0.001497869	0.022245
7460041451	574600	4145150	0.022536169	0.001561835	0.024098
7460041451	574600	4145160	0.024646694	0.001622571	0.026269
7461041451	574610	4145160	0.100772432	0.003195438	0.103968
7461041451	574610	4145170	0.120808757	0.004059546	0.124868
7457041450	574570	4145030	0.146951259	0.005871205	0.152822
7463041450	574630	4145080	0.17955511	0.010861087	0.190416
7461041450	574610	4145090	0.215229124	0.040695163	0.255924
7462041450	574620	4145090	0.248949709	0.026917918	0.275868
7463041450	574630	4145090	0.280525617	0.010310484	0.290836
7464041450	574640	4145090	0.294694819	0.005690872	0.300386
7460041451	574600	4145100	0.291153373	0.003546914	0.2947
7461041451	574610	4145100	0.279890411	0.002569542	0.28246
7462041451	574620	4145100	0.020094381	0.001741931	0.021836
7463041451	574630	4145100	0.02177802	0.001836893	0.023615
7464041451	574640	4145100	0.023721205	0.001898121	0.025619
7465041451	574650	4145100	0.025684881	0.00182674	0.027512
7459041451	574590	4145110	0.075773984	0.003022684	0.078797
7460041451	574600	4145110	0.088703509	0.003536899	0.09224
7461041451	574610	4145110	0.104337785	0.004444111	0.108782
7462041451	574620	4145110	0.123998449	0.006345378	0.130344
7463041451	574630	4145110	0.146896618	0.011129042	0.158026
7464041451	574640	4145110	0.172882027	0.037069346	0.209951
7465041451	574650	4145110	0.196603232	0.025959208	0.222562
7466041451	574660	4145110	0.218425647	0.010384754	0.22881
7460041451	574600	4145120	0.226509162	0.005561919	0.232071
7461041451	574610	4145120	0.227615651	0.003587758	0.231203
7462041451	574620	4145120	0.220365418	0.002554862	0.22292
7463041451	574630	4145120	0.019267929	0.002032839	0.021301
7464041451	574640	4145120	0.020995964	0.002205915	0.023202
7465041451	574650	4145120	0.022676188	0.002198035	0.024874
7466041451	574660	4145120	0.023758771	0.002120667	0.025879
7460041451	574600	4145130	0.025749768	0.002096494	0.027846
7462041451	574620	4145130	0.04110059	0.002583023	0.043684
7463041451	574630	4145130	0.046277865	0.002737961	0.049016
7464041451	574640	4145130	0.052192798	0.002973938	0.055167
7465041451	574650	4145130	0.059705993	0.003192455	0.062898
7463041451	574630	4145140	0.068506676	0.00351197	0.072019
7464041451	574640	4145140	0.078553866	0.003989524	0.082543
7459041451	574590	4145150	0.091326297	0.005011717	0.096338
7460041451	574600	4145150	0.106055574	0.007103889	0.113159
7460041451	574600	4145160	0.122540207	0.012424625	0.134965
7461041451	574610	4145160	0.140629931	0.03959451	0.180224
7461041451	574610	4145170	0.159351446	0.025780396	0.185132
7457041450	574570	4145030	0.174705684	0.010382363	0.185088
7463041450	574630	4145080	0.179305808	0.005399494	0.184705
7461041450	574610	4145090	0.181351446	0.003561856	0.184913
7462041450	574620	4145090	0.178431545	0.002576363	0.181008
7463041450	574630	4145090	0.01773797	0.002450264	0.020188
7464041450	574640	4145090	0.020196834	0.002774575	0.022971
7460041451	574600	4145100	0.020876436	0.0026073	0.023484
7461041451	574610	4145100	0.023369451	0.00262308	0.025993
7462041451	574620	4145100	0.025579013	0.002669906	0.028249
7463041451	574630	4145100	0.028184726	0.002725623	0.03091
7464041451	574640	4145100	0.031152438	0.002809734	0.033962
7465041451	574650	4145100	0.034444583	0.002962137	0.037407
7459041451	574590	4145110	0.038300218	0.003108496	0.041409
7460041451	574600	4145110	0.042767154	0.003333111	0.0461
7461041451	574610	4145110	0.047968333	0.003585952	0.051554
7462041451	574620	4145110	0.054255511	0.003808817	0.058064

Max GLC for Chronic Calcs

Max GLC: 0.254053

XY	X	Y	2025	2026	2027	2034	2035
7463041451	574630	4145140	0.0077472	0.0123803	0		
7464041451	574640	4145140	0.0071277	0.0113999	0		
7459041451	574590	4145150	0.0004329	0.0006779	0		
7460041451	574600	4145150	0.0004691	0.0007352	0		
7460041451	574600	4145160	0.0005115	0.0008024	0		
7461041451	574610	4145160	0.0020286	0.0032184	0		
7461041451	574610	4145170	0.0024362	0.0038624	0		
7457041450	574570	4145030	0.0029803	0.0047152	0		
7463041450	574630	4145080	0.0037086	0.0058285	0		
7461041450	574610	4145090	0.004949	0.00749	0		
7462041450	574620	4145090	0.0053577	0.0082969	0		
7463041450	574630	4145090	0.005673	0.0089849	0		
7464041450	574640	4145090	0.005866	0.0093452	0		
7460041451	574600	4145100	0.0057577	0.0091951	0		
7461041451	574610	4145100	0.0055197	0.0088242	0		
7462041451	574620	4145100	0.0004246	0.0006619	0		
7463041451	574630	4145100	0.0004593	0.0007164	0		
7464041451	574640	4145100	0.0004984	0.0007784	0		
7465041451	574650	4145100	0.0005355	0.0008387	0		
7459041451	574590	4145110	0.0015367	0.0024313	0		
7460041451	574600	4145110	0.0017989	0.0028461	0		
7461041451	574610	4145110	0.0021211	0.0033529	0		
7462041451	574620	4145110	0.0025401	0.0040041	0		
7463041451	574630	4145110	0.0030749	0.0048092	0		
7464041451	574640	4145110	0.004055	0.0060961	0		
7465041451	574650	4145110	0.0043167	0.0066378	0		
7466041451	574660	4145110	0.00446	0.0070388	0		
7460041451	574600	4145120	0.0045303	0.0072046	0		
7461041451	574610	4145120	0.0045161	0.0072033	0		
7462041451	574620	4145120	0.0043555	0.0069572	0		
7463041451	574630	4145120	0.0004138	0.0006412	0		
7464041451	574640	4145120	0.0004507	0.0006986	0		
7465041451	574650	4145120	0.0004834	0.0007511	0		
7466041451	574660	4145120	0.0005032	0.0007837	0		
7460041451	574600	4145130	0.0005417	0.0008457	0		
7462041451	574620	4145130	0.0008507	0.0013359	0		
7463041451	574630	4145130	0.0009547	0.0015011	0		
7464041451	574640	4145130	0.0010747	0.0016909	0		
7465041451	574650	4145130	0.0012256	0.0019305	0		
7463041451	574630	4145140	0.0014035	0.0022123	0		
7464041451	574640	4145140	0.0016086	0.002536	0		
7459041451	574590	4145150	0.001877	0.0029552	0		
7460041451	574600	4145150	0.0022031	0.0034552	0		
7460041451	574600	4145160	0.0026222	0.0040689	0		
7461041451	574610	4145160	0.0034703	0.0051306	0		
7461041451	574610	4145170	0.003585	0.0054663	0		
7457041450	574570	4145030	0.0036051	0.0056677	0		
7463041450	574630	4145080	0.0036044	0.0057213	0		
7461041450	574610	4145090	0.0036109	0.005752	0		
7462041450	574620	4145090	0.0035359	0.0056425	0		
7463041450	574630	4145090	0.0003914	0.0006008	0		
7464041450	574640	4145090	0.0004454	0.0006839	0		
7460041451	574600	4145100	0.0004557	0.0007021	0		
7461041451	574610	4145100	0.0005047	0.0007806	0		
7462041451	574620	4145100	0.0005487	0.0008507	0		
7463041451	574630	4145100	0.0006007	0.0009335	0		
7464041451	574640	4145100	0.0006603	0.0010281	0		
7465041451	574650	4145100	0.0007274	0.0011341	0		
7459041451	574590	4145110	0.0008055	0.0012577	0		
7460041451	574600	4145110	0.0008969	0.0014018	0		
7461041451	574610	4145110	0.0010032	0.0015695	0		
7462041451	574620	4145110	0.0011302	0.0017708	0		

Garvey Reservoir Rehab -Unmitigated Administration Building and Water Quality Laboratory

Cancer Risk Summary & Maximum Annual GLC for Chronic Calculations

Cancer Risk Summary

Max Risk: 8.102129

XY	X	Y	Offroad Risk	Haul Risk	Total Risk
7463041451	574630	4145110	0.061498914	0.004109344	0.065608
7464041451	574640	4145110	0.069579014	0.004560427	0.074139
7465041451	574650	4145110	0.078359206	0.005483601	0.083843
7466041451	574660	4145110	0.090817449	0.008022329	0.09884
7460041451	574600	4145120	0.103624031	0.015810234	0.119434
7461041451	574610	4145120	0.117520026	0.055073026	0.172593
7462041451	574620	4145120	0.131327229	0.023222481	0.15455
7463041451	574630	4145120	0.142873644	0.01023152	0.153105
7464041451	574640	4145120	0.151168894	0.005963954	0.157133
7465041451	574650	4145120	0.148013352	0.0035403	0.151554
7466041451	574660	4145120	0.147473768	0.00260148	0.150075
7460041451	574600	4145130	0.016730519	0.003158325	0.019889
7462041451	574620	4145130	0.019407948	0.00374652	0.023154
7463041451	574630	4145130	0.020917417	0.003888598	0.024806
7464041451	574640	4145130	0.022642037	0.003821901	0.026464
7465041451	574650	4145130	0.024571562	0.003866832	0.028438
7463041451	574630	4145140	0.026787954	0.00384101	0.030629
7464041451	574640	4145140	0.029291214	0.003905031	0.033196
7459041451	574590	4145150	0.032183794	0.003961127	0.036145
7460041451	574600	4145150	0.035533996	0.004175527	0.03971
7460041451	574600	4145160	0.039461348	0.004397965	0.043859
7461041451	574610	4145160	0.043941944	0.004587872	0.04853
7461041451	574610	4145170	0.049139709	0.004783695	0.053923
7457041450	574570	4145030	0.055177585	0.005056865	0.060234
7463041450	574630	4145080	0.062199007	0.005546939	0.067746
7461041450	574610	4145090	0.068998449	0.006477616	0.075476
7462041450	574620	4145090	0.078625583	0.00903281	0.087658
7463041450	574630	4145090	0.088939151	0.020484184	0.109423
7464041450	574640	4145090	0.099392737	0.056264603	0.155657
7460041451	574600	4145100	0.109801926	0.018830994	0.128633
7461041451	574610	4145100	0.118882647	0.009533214	0.128416
7462041451	574620	4145100	0.125583051	0.005954973	0.131538
7463041451	574630	4145100	0.129203044	0.004063944	0.133267
7464041451	574640	4145100	0.129356723	0.002949548	0.132306
7465041451	574650	4145100	0	0	0
7459041451	574590	4145110	0	0	0
7460041451	574600	4145110	0	0	0
7461041451	574610	4145110	0	0	0
7462041451	574620	4145110	0	0	0
7463041451	574630	4145110	0	0	0
7464041451	574640	4145110	0	0	0
7465041451	574650	4145110	0	0	0
7466041451	574660	4145110	0	0	0
7460041451	574600	4145120	0	0	0
7461041451	574610	4145120	0	0	0
7462041451	574620	4145120	0	0	0
7463041451	574630	4145120	0	0	0
7464041451	574640	4145120	0	0	0
7465041451	574650	4145120	0	0	0
7466041451	574660	4145120	0	0	0
7460041451	574600	4145130	0	0	0
7462041451	574620	4145130	0	0	0
7463041451	574630	4145130	0	0	0
7464041451	574640	4145130	0	0	0
7465041451	574650	4145130	0	0	0
7463041451	574630	4145140	0	0	0
7464041451	574640	4145140	0	0	0
7459041451	574590	4145150	0	0	0
7460041451	574600	4145150	0	0	0
7460041451	574600	4145160	0	0	0
7461041451	574610	4145160	0	0	0
7461041451	574610	4145170	0	0	0

Max GLC for Chronic Calcs

Max GLC: 0.254053

XY	X	Y	2025	2026	2027	2034	2035
57463041451	574630	4145110	0.0012773	0.0020034	0		
57464041451	574640	4145110	0.0014435	0.002265	0		
57465041451	574650	4145110	0.001632	0.0025571	0		
57466041451	574660	4145110	0.0019218	0.002994	0		
57460041451	574600	4145120	0.0023139	0.0035373	0		
57461041451	574610	4145120	0.0033	0.0046875	0		
57462041451	574620	4145120	0.0029905	0.004541	0		
57463041451	574630	4145120	0.0029799	0.0046667	0		
57464041451	574640	4145120	0.0030645	0.0048492	0		
57465041451	574650	4145120	0.0029587	0.0047061	0		
57466041451	574660	4145120	0.002931	0.0046721	0		
57460041451	574600	4145130	0.0003846	0.0005821	0		
57462041451	574620	4145130	0.0004477	0.0006768	0		
57463041451	574630	4145130	0.0004798	0.0007267	0		
57464041451	574640	4145130	0.0005123	0.0007796	0		
57465041451	574650	4145130	0.0005508	0.0008409	0		
57463041451	574630	4145140	0.0005937	0.00091	0		
57464041451	574640	4145140	0.0006438	0.0009896	0		
57459041451	574590	4145150	0.0007014	0.0010814	0		
57460041451	574600	4145150	0.0007708	0.0011903	0		
57460041451	574600	4145160	0.0008516	0.0013175	0		
57461041451	574610	4145160	0.0009427	0.0014615	0		
57461041451	574610	4145170	0.0010479	0.0016281	0		
57457041450	574570	4145030	0.0011709	0.0018224	0		
57463041450	574630	4145080	0.0013172	0.0020515	0		
57461041450	574610	4145090	0.0014671	0.0022817	0		
57462041450	574620	4145090	0.0017018	0.0026301	0		
57463041450	574630	4145090	0.0021118	0.0031618	0		
57464041450	574640	4145090	0.0029672	0.0041407	0		
57460041451	574600	4145100	0.0024897	0.003786	0		
57461041451	574610	4145100	0.0024981	0.0039016	0		
57462041451	574620	4145100	0.002564	0.0040467	0		
57463041451	574630	4145100	0.0026004	0.0041258	0		
57464041451	574640	4145100	0.0025831	0.0041103	0		
57465041451	574650	4145100	0	0	0		
57459041451	574590	4145110	0	0	0		
57460041451	574600	4145110	0	0	0		
57461041451	574610	4145110	0	0	0		
57462041451	574620	4145110	0	0	0		
57463041451	574630	4145110	0	0	0		
57464041451	574640	4145110	0	0	0		
57465041451	574650	4145110	0	0	0		
57466041451	574660	4145110	0	0	0		
57460041451	574600	4145120	0	0	0		
57461041451	574610	4145120	0	0	0		
57462041451	574620	4145120	0	0	0		
57463041451	574630	4145120	0	0	0		
57464041451	574640	4145120	0	0	0		
57465041451	574650	4145120	0	0	0		
57466041451	574660	4145120	0	0	0		
57460041451	574600	4145130	0	0	0		
57462041451	574620	4145130	0	0	0		
57463041451	574630	4145130	0	0	0		
57464041451	574640	4145130	0	0	0		
57465041451	574650	4145130	0	0	0		
57463041451	574630	4145140	0	0	0		
57464041451	574640	4145140	0	0	0		
57459041451	574590	4145150	0	0	0		
57460041451	574600	4145150	0	0	0		
57460041451	574600	4145160	0	0	0		
57461041451	574610	4145160	0	0	0		
57461041451	574610	4145170	0	0	0		

Garvey Reservoir Rehab -Unmitigated Administration Building and Water Quality Laboratory

Construction Modeling Assumptions

AERMOD Sources

Volume Sources		
Offroad Construction Exhaust		
Release Height	3.66	m
Emissions rate	1	g/s
Init Vert Dimension	3.4	m
Line Volume		
Onroad Hauling Exhaust		
Plume Height	7.315	m
Plume Width	20	m
Release Height	3.66	m
Emissions rate	1	g/s

Meteorology:

SCAQMD	Pico	Rivera	2010 - 2012, 2015 - 2016

SCAQMD Met Data

https://www.aqmd.gov/home/air-quality/meteorological-data/data-for-aermod

AERMOD Sources

Garvey Reservoir Rehab -Unmitigated Administration Building and Water Quality Laboratory

Health Risk Assessment Risk Factors

Residential Risk	Abbreviation	UOM	3rd Trimester	0<2	2<16	16<30
Daily Breathing Rate (95th %'ile)	DBR	L/kg-day	361	1090	572	261
Fraction Of Time At Home [a]	FAH	unitless	1	1	1	0.73
Exposure Frequency	EF	days/year	0.96	0.96	0.96	0.96
Age Sensitivity Factor	ASF	unitless	10	10	3	1
Inhalation Absorption Factor	A	unitless	1	1	1	1
Conversion Factor	CF_1	m^3/L	0.001	0.001	0.001	0.001
Conversion Factor	CF_2	$\mu g/m^3$	0.001	0.001	0.001	0.001
Cancer Potency Factor (diesel exhaust)	CPF	$mg/kg\text{-}day^{-1}$	1.1	1.1	1.1	1.1
Averaging Time (for residential exposure)	AT	years	70.00	70.00	70.00	70.00

[a] assume school or daycare will have cancer risk of >1 per million

Risk Factors

Garvey Reservoir Rehab -Unmitigated Administration Building and Water Quality Laboratory

Health Risk Assessment Exposure Duration Assumptions for Offroad Equipment

Residential Receptors

			Start Date	*9/30/2025*	*12/30/2025*
			End Date	*12/29/2025*	*12/30/2027*
	9/30/2025	*7/31/2026*	*Days*	*90*	*730*
Phase	Start Date	End Date	Duration (days)	3rd Tri	0<2
Demolition - 2025			1	0	0
Demolition - 2026			1	0	0
Site Preparation - 2025			1	0	0
Site Preparation - 2026			1	0	0
Grading - 2025			1	0	0
Grading - 2026			1	0	0
Infrastructure - 2025	9/30/2025	12/31/2025	93	91	2
Infrastructure - 2026	1/1/2026	3/31/2026	90	0	90
Paving - 2025		7/31/2026	46235	91	214
Architectural Coating - 2026	4/1/2026		-46112	0	0

			Intake Factor for Inhalation, IF (m^3/kg-day)			Risk Calculation Part 1, R1		
Phase	Year	Year	Equation	3rd Trimester	0<2	Equation	3rd Trimester	0<2
Demolition - 2025		1900		0	0		0	0
Demolition - 2026		1900	$\frac{DBR \cdot FAH \cdot EF \cdot ED \cdot ASF \cdot A \cdot CF_1}{AT}$	0	0		0	0
Site Preparation - 2025		1900		0	0		0	0
Site Preparation - 2026		1900		0	0	$IF \cdot CPF \cdot CF_2$	0	0
Grading - 2025		1900		0	0		0	0
Grading - 2026		1900		0	0		0	0
Infrastructure - 2025		2025		0.012329142	0.000818165		1.35621E-05	8.99981E-07
Infrastructure - 2026		2026		0	0.036817414		0	4.04992E-05
Paving - 2025		1900		0.012329142	0.087543629		1.35621E-05	9.6298E-05
Architectural Coating - 2026		2026		0	0		0	0

Exposure Durations

Garvey Reservoir Rehab -Unmitigated Administration Building and Water Quality Laboratory

Offroad DPM Emissions, Ground Level Concentrations and Health Risk Calculations

Residential Receptors

Phase	Year	Emissions (lbs/day)	Work Hours Per Day	Emissions (g/s)
Demolition - 2025	1900		10	0
Demolition - 2026	1900		10	0
Site Preparation - 2025	1900		10	0
Site Preparation - 2026	1900		10	0
Grading - 2025	1900		10	0
Grading - 2026	1900		10	0
Infrastructure - 2025	2025	0.530	10	0.006677853
Infrastructure - 2026	2026	0.480	10	0.006047867
Paving - 2025	1900		10	0
Architectural Coating - 2026	2026	0.370	10	0.004661897

		AERMOD Column Identifier:	*4*	*4*	*4*	*4*	*4*	*4*	*4*	*4*	*4*	*4*				
-Unitigated Administrative Building and Water Quality Laboratory Rehabilitatio			Demolition - 2025	Demolition - 2026	ite Preparation - 202	ite Preparation - 202	Grading - 2025	Grading - 2026	nfrastructure - 202	nfrastructure - 202	Paving - 2025	itectural Coating -	Child Risk			
Unique Identifier	X (UTM)	Y (UTM)	1900	1900	1900	1900	1900	1900	2025	2026	1900	2026	3rd Trimester	0<2	Total	per million
396166.283767377.2	396166.28	3767377	0	0	0	0	0	0	0.000260637	0.000236048	0	0.000181954	3.53477E-09	9.79432E-09	1.33291E-08	0.0133291
396266.283767377.2	396266.28	3767377	0	0	0	0	0	0	0.000288684	0.000261449	0	0.000201534	3.91514E-09	1.08483E-08	1.47634E-08	0.0147634
396366.283767377.2	396366.28	3767377	0	0	0	0	0	0	0.000330554	0.000299369	0	0.000230764	4.48299E-09	1.24217E-08	1.69047E-08	0.0169047
396466.283767377.2	396466.28	3767377	0	0	0	0	0	0	0.000374828	0.000339467	0	0.000261672	5.08344E-09	1.40855E-08	1.91689E-08	0.0191689
396566.283767377.2	396566.28	3767377	0	0	0	0	0	0	0.000429853	0.000389301	0	0.000300086	5.8297E-09	1.61532E-08	2.19829E-08	0.0219829
396666.283767377.2	396666.28	3767377	0	0	0	0	0	0	0.000479804	0.000434539	0	0.000334957	6.50713E-09	1.80303E-08	2.45374E-08	0.0245374
396766.283767377.2	396766.28	3767377	0	0	0	0	0	0	0.000524812	0.000475302	0	0.000366379	7.11754E-09	1.97216E-08	2.68392E-08	0.0268392
396866.283767377.2	396866.28	3767377	0	0	0	0	0	0	0.000573895	0.000519754	0	0.000400643	7.78319E-09	2.15661E-08	2.93493E-08	0.0293493
396966.283767377.2	396966.28	3767377	0	0	0	0	0	0	0.000633929	0.000574124	0	0.000442554	8.59738E-09	2.38221E-08	3.24194E-08	0.0324194
397066.283767377.2	397066.28	3767377	0	0	0	0	0	0	0.000674129	0.000610532	0	0.000470619	9.14258E-09	2.53327E-08	3.44753E-08	0.0344753
397166.283767377.2	397166.28	3767377	0	0	0	0	0	0	0.000687351	0.000622507	0	0.000479849	9.3219E-09	2.58296E-08	3.51515E-08	0.0351515
397266.283767377.2	397266.28	3767377	0	0	0	0	0	0	0.000678537	0.000614524	0	0.000473695	9.20235E-09	2.54984E-08	3.47007E-08	0.0347007
397366.283767377.2	397366.28	3767377	0	0	0	0	0	0	0.000679271	0.000615189	0	0.000474208	9.21231E-09	2.5526E-08	3.47383E-08	0.0347383
397466.283767377.2	397466.28	3767377	0	0	0	0	0	0	0.000665582	0.000602791	0	0.000464651	9.02666E-09	2.50115E-08	3.40382E-08	0.0340382
397566.283767377.2	397566.28	3767377	0	0	0	0	0	0	0.00063059	0.0005711	0	0.000440223	8.55209E-09	2.36966E-08	3.22487E-08	0.0322487
397666.283767377.2	397666.28	3767377	0	0	0	0	0	0	0.000585447	0.000530216	0	0.000408709	7.93987E-09	2.20002E-08	2.99401E-08	0.0299401
397766.283767377.2	397766.28	3767377	0	0	0	0	0	0	0.00052321	0.00047385	0	0.00036526	7.0958E-09	1.96614E-08	2.67572E-08	0.0267572
397866.283767377.2	397866.28	3767377	0	0	0	0	0	0	0.000468986	0.000424742	0	0.000327405	6.36041E-09	1.76238E-08	2.39842E-08	0.0239842
396166.283767477.2	396166.28	3767477	0	0	0	0	0	0	0.000274794	0.00024887	0	0.000191837	3.72677E-09	1.03263E-08	1.40531E-08	0.0140531
396266.283767477.2	396266.28	3767477	0	0	0	0	0	0	0.000303241	0.000274634	0	0.000211697	4.11258E-09	1.13953E-08	1.55079E-08	0.0155079
396366.283767477.2	396366.28	3767477	0	0	0	0	0	0	0.000352925	0.00031963	0	0.000246381	4.78638E-09	1.32624E-08	1.80487E-08	0.0180487
396466.283767477.2	396466.28	3767477	0	0	0	0	0	0	0.000408217	0.000369706	0	0.000284982	5.53626E-09	1.53402E-08	2.08764E-08	0.0208764
396566.283767477.2	396566.28	3767477	0	0	0	0	0	0	0.000472124	0.000427584	0	0.000329596	6.40298E-09	1.77417E-08	2.41447E-08	0.0241447
396666.283767477.2	396666.28	3767477	0	0	0	0	0	0	0.000540906	0.000489877	0	0.000377614	7.3358E-09	2.03264E-08	2.76622E-08	0.0276622
396766.283767477.2	396766.28	3767477	0	0	0	0	0	0	0.000615631	0.000557553	0	0.00042978	8.34923E-09	2.31345E-08	3.14837E-08	0.0314837
396866.283767477.2	396866.28	3767477	0	0	0	0	0	0	0.000697435	0.000631639	0	0.000486889	9.45865E-09	2.62085E-08	3.56672E-08	0.0356672
396966.283767477.2	396966.28	3767477	0	0	0	0	0	0	0.000795933	0.000720845	0	0.000555652	1.07945E-08	2.99099E-08	4.07044E-08	0.0407044
397066.283767477.2	397066.28	3767477	0	0	0	0	0	0	0.000874331	0.000791847	0	0.000610382	1.18577E-08	3.2856E-08	4.47138E-08	0.0447138
397166.283767477.2	397166.28	3767477	0	0	0	0	0	0	0.000913196	0.000827046	0	0.000637514	1.23848E-08	3.43165E-08	4.67013E-08	0.0467013
397266.283767477.2	397266.28	3767477	0	0	0	0	0	0	0.000913063	0.000826925	0	0.000637421	1.2383E-08	3.43115E-08	4.66945E-08	0.0466945
397366.283767477.2	397366.28	3767477	0	0	0	0	0	0	0.00090151	0.000816462	0	0.000629356	1.22263E-08	3.38774E-08	4.61037E-08	0.0461037
397466.283767477.2	397466.28	3767477	0	0	0	0	0	0	0.000879206	0.000796262	0	0.000613785	1.19238E-08	3.30392E-08	4.49631E-08	0.0449631
397566.283767477.2	397566.28	3767477	0	0	0	0	0	0	0.000820975	0.000743525	0	0.000573134	1.11341E-08	3.0851E-08	4.19851E-08	0.0419851
397666.283767477.2	397666.28	3767477	0	0	0	0	0	0	0.000742978	0.000672886	0	0.000518683	1.00763E-08	2.792E-08	3.79963E-08	0.0379963
397766.283767477.2	397766.28	3767477	0	0	0	0	0	0	0.000657301	0.000595292	0	0.000458871	8.91435E-09	2.47004E-08	3.36147E-08	0.0336147
397866.283767477.2	397866.28	3767477	0	0	0	0	0	0	0.000573895	0.000519754	0	0.000400643	7.78319E-09	2.15661E-08	2.93493E-08	0.0293493
396166.283767577.2	396166.28	3767577	0	0	0	0	0	0	0.000283475	0.000256732	0	0.000197898	3.8445E-09	1.06525E-08	1.44971E-08	0.0144971
396266.283767577.2	396266.28	3767577	0	0	0	0	0	0	0.000318734	0.000288665	0	0.000222512	4.32269E-09	1.19775E-08	1.63002E-08	0.0163002
396366.283767577.2	396366.28	3767577	0	0	0	0	0	0	0.000369218	0.000334387	0	0.000257756	5.00736E-09	1.38747E-08	1.8882E-08	0.018882
396466.283767577.2	396466.28	3767577	0	0	0	0	0	0	0.000434795	0.000393777	0	0.000303536	5.89671E-09	1.63389E-08	2.22356E-08	0.0222356
396566.283767577.2	396566.28	3767577	0	0	0	0	0	0	0.000516799	0.000468044	0	0.000360784	7.00886E-09	1.94205E-08	2.64294E-08	0.0264294

-Unitigated Administrative Building and Water Quality Laboratory Rehabilitatio			Demolition - 2025	Demolition - 2026	ite Preparation - 202	te Preparation - 202	Grading - 2025	Grading - 2026	nfrastructure - 202	nfrastructure - 202	Paving - 2025	itectural Coating -	Child Risk			
Unique Identifier	X (UTM)	Y (UTM)	1900	1900	1900	1900	1900	1900	2025	2026	1900	2026	3rd Trimester	0<2	Total	per million
396666.283767577.2	396666.28	3767577	0	0	0	0	0	0	0.000616366	0.000558218	0	0.000430293	8.35919E-09	2.31621E-08	3.15213E-08	0.0315213
396766.283767577.2	396766.28	3767577	0	0	0	0	0	0	0.000709655	0.000642707	0	0.00049542	9.62439E-09	2.66678E-08	3.62921E-08	0.0362921
396866.283767577.2	396866.28	3767577	0	0	0	0	0	0	0.000855032	0.000774369	0	0.000596909	1.1596E-08	3.21308E-08	4.37268E-08	0.0437268
396966.283767577.2	396966.28	3767577	0	0	0	0	0	0	0.001009892	0.000914619	0	0.000705019	1.36962E-08	3.79502E-08	5.16464E-08	0.0516464
397066.283767577.2	397066.28	3767577	0	0	0	0	0	0	0.001158274	0.001049002	0	0.000808606	1.57086E-08	4.35261E-08	5.92347E-08	0.0592347
397166.283767577.2	397166.28	3767577	0	0	0	0	0	0	0.001267123	0.001147583	0	0.000884595	1.71848E-08	4.76165E-08	6.48013E-08	0.0648013
397266.283767577.2	397266.28	3767577	0	0	0	0	0	0	0.001298108	0.001175645	0	0.000906226	1.7605E-08	4.87809E-08	6.63859E-08	0.0663859
397366.283767577.2	397366.28	3767577	0	0	0	0	0	0	0.001274869	0.001154598	0	0.000890003	1.72898E-08	4.79076E-08	6.51975E-08	0.0651975
397466.283767577.2	397466.28	3767577	0	0	0	0	0	0	0.001229994	0.001113957	0	0.000858675	1.66812E-08	4.62213E-08	6.29025E-08	0.0629025
397566.283767577.2	397566.28	3767577	0	0	0	0	0	0	0.001116871	0.001011506	0	0.000779702	1.51471E-08	4.19703E-08	5.71174E-08	0.0571174
397666.283767577.2	397666.28	3767577	0	0	0	0	0	0	0.000976703	0.000884561	0	0.000681849	1.32461E-08	3.6703E-08	4.99491E-08	0.0499491
397766.283767577.2	397766.28	3767577	0	0	0	0	0	0	0.00083186	0.000753383	0	0.000580733	1.12817E-08	3.126E-08	4.25418E-08	0.0425418
397866.283767577.2	397866.28	3767577	0	0	0	0	0	0	0.00070044	0.000634361	0	0.000488986	9.49941E-09	2.63215E-08	3.58209E-08	0.0358209
396166.283767677.2	396166.28	3767677	0	0	0	0	0	0	0.000293759	0.000266046	0	0.000205077	3.98397E-09	1.1039E-08	1.5023E-08	0.015023
396266.283767677.2	396266.28	3767677	0	0	0	0	0	0	0.000333091	0.000301668	0	0.000232535	4.5174E-09	1.25171E-08	1.70345E-08	0.0170345
396366.283767677.2	396366.28	3767677	0	0	0	0	0	0	0.000389719	0.000352953	0	0.000272068	5.2854E-09	1.46451E-08	1.99305E-08	0.0199305
396466.283767677.2	396466.28	3767677	0	0	0	0	0	0	0.000464779	0.000420932	0	0.000324468	6.30335E-09	1.74657E-08	2.3769E-08	0.023769
396566.283767677.2	396566.28	3767677	0	0	0	0	0	0	0.000557534	0.000504936	0	0.000389222	7.56131E-09	2.09513E-08	2.85126E-08	0.0285126
396666.283767677.2	396666.28	3767677	0	0	0	0	0	0	0.000661976	0.000599525	0	0.000462134	8.97775E-09	2.4876E-08	3.38538E-08	0.0338538
396766.283767677.2	396766.28	3767677	0	0	0	0	0	0	0.000824448	0.00074667	0	0.000575558	1.11812E-08	3.09815E-08	4.21627E-08	0.0421627
396866.283767677.2	396866.28	3767677	0	0	0	0	0	0	0.001054567	0.000955079	0	0.000736207	1.43021E-08	3.9629E-08	5.39311E-08	0.0539311
396966.283767677.2	396966.28	3767677	0	0	0	0	0	0	0.001334101	0.001208243	0	0.000931354	1.80932E-08	5.01335E-08	6.82266E-08	0.0682266
397066.283767677.2	397066.28	3767677	0	0	0	0	0	0	0.001612368	0.001460257	0	0.001125615	2.1867E-08	6.05903E-08	8.24573E-08	0.0824573
397166.283767677.2	397166.28	3767677	0	0	0	0	0	0	0.001861518	0.001685903	0	0.00129955	2.5246E-08	6.9953E-08	9.5199E-08	0.095199
397266.283767677.2	397266.28	3767677	0	0	0	0	0	0	0.00202005	0.00182948	0	0.001410224	2.7396E-08	7.59104E-08	1.03306E-07	0.1033064
397366.283767677.2	397366.28	3767677	0	0	0	0	0	0	0.001979182	0.001792467	0	0.001381693	2.68418E-08	7.43746E-08	1.01216E-07	0.1012164
397466.283767677.2	397466.28	3767677	0	0	0	0	0	0	0.001858847	0.001683484	0	0.001297686	2.52098E-08	6.98526E-08	9.50624E-08	0.0950624
397566.283767677.2	397566.28	3767677	0	0	0	0	0	0	0.001610164	0.001458262	0	0.001124077	2.18371E-08	6.05075E-08	8.23446E-08	0.0823446
397666.283767677.2	397666.28	3767677	0	0	0	0	0	0	0.001327958	0.001202679	0	0.000927065	1.80098E-08	4.99026E-08	6.79125E-08	0.0679125
397766.283767677.2	397766.28	3767677	0	0	0	0	0	0	0.001069792	0.000968868	0	0.000746836	1.45086E-08	4.02011E-08	5.47097E-08	0.0547097
397866.283767677.2	397866.28	3767677	0	0	0	0	0	0	0.000856702	0.000775881	0	0.000598075	1.16186E-08	3.21935E-08	4.38122E-08	0.0438122
396166.283767777.2	396166.28	3767777	0	0	0	0	0	0	0.000300503	0.000272154	0	0.000209785	4.07544E-09	1.12925E-08	1.53679E-08	0.0153679
396266.283767777.2	396266.28	3767777	0	0	0	0	0	0	0.000348116	0.000315275	0	0.000243025	4.72118E-09	1.30817E-08	1.78029E-08	0.0178029
396366.283767777.2	396366.28	3767777	0	0	0	0	0	0	0.000406481	0.000368134	0	0.00028377	5.51272E-09	1.52749E-08	2.07876E-08	0.0207876
396466.283767777.2	396466.28	3767777	0	0	0	0	0	0	0.00048548	0.00043968	0	0.00033892	6.58411E-09	1.82436E-08	2.48277E-08	0.0248277
396566.283767777.2	396566.28	3767777	0	0	0	0	0	0	0.000582977	0.000527979	0	0.000406984	7.90636E-09	2.19074E-08	2.98137E-08	0.0298137
396666.283767777.2	396666.28	3767777	0	0	0	0	0	0	0.000722677	0.0006545	0	0.000504511	9.80099E-09	2.71571E-08	3.69581E-08	0.0369581
396766.283767777.2	396766.28	3767777	0	0	0	0	0	0	0.000944515	0.00085541	0	0.000659379	1.28096E-08	3.54934E-08	4.8303E-08	0.048303
396866.283767777.2	396866.28	3767777	0	0	0	0	0	0	0.001264986	0.001145647	0	0.000883103	1.71558E-08	4.75362E-08	6.4692E-08	0.064692
396966.283767777.2	396966.28	3767777	0	0	0	0	0	0	0.00171307	0.001551459	0	0.001195916	2.32327E-08	6.43745E-08	8.76073E-08	0.0876073
397066.283767777.2	397066.28	3767777	0	0	0	0	0	0	0.002301589	0.002084458	0	0.001606769	3.12143E-08	8.64902E-08	1.17704E-07	0.1177044
397166.283767777.2	397166.28	3767777	0	0	0	0	0	0	0.00294707	0.002669045	0	0.002057388	3.99683E-08	1.10746E-07	1.50715E-07	0.1507147
397266.283767777.2	397266.28	3767777	0	0	0	0	0	0	0.003475021	0.003147189	0	0.002425958	4.71284E-08	1.30586E-07	1.77714E-07	0.1777144
397366.283767777.2	397366.28	3767777	0	0	0	0	0	0	0.003516424	0.003184686	0	0.002454862	4.76899E-08	1.32142E-07	1.79832E-07	0.1798317
397466.283767777.2	397466.28	3767777	0	0	0	0	0	0	0.003056787	0.002768411	0	0.002133983	4.14563E-08	1.14869E-07	1.56326E-07	0.1563257
397566.283767777.2	397566.28	3767777	0	0	0	0	0	0	0.002434945	0.002205234	0	0.001699868	3.30229E-08	9.15015E-08	1.24524E-07	0.1245244
397666.283767777.2	397666.28	3767777	0	0	0	0	0	0	0.001868196	0.001691951	0	0.001304212	2.53366E-08	7.02039E-08	9.55405E-08	0.0955405
397766.283767777.2	397766.28	3767777	0	0	0	0	0	0	0.001389728	0.001258622	0	0.000970187	1.88476E-08	5.22238E-08	7.10714E-08	0.0710714
397866.283767777.2	397866.28	3767777	0	0	0	0	0	0	0.001051094	0.000951934	0	0.000733783	1.4255E-08	3.94985E-08	5.37535E-08	0.0537535
396166.283767877.2	396166.28	3767877	0	0	0	0	0	0	0.000304644	0.000275904	0	0.000212676	4.13159E-09	1.1448E-08	1.55796E-08	0.0155796
396266.283767877.2	396266.28	3767877	0	0	0	0	0	0	0.000354527	0.000321081	0	0.0002475	4.80812E-09	1.33226E-08	1.81307E-08	0.0181307
396366.283767877.2	396366.28	3767877	0	0	0	0	0	0	0.000418034	0.000378596	0	0.000291835	5.6694E-09	1.57091E-08	2.13785E-08	0.0213785
396466.283767877.2	396466.28	3767877	0	0	0	0	0	0	0.00049937	0.000452259	0	0.000348617	6.77248E-09	1.87656E-08	2.5538E-08	0.025538
396566.283767877.2	396566.28	3767877	0	0	0	0	0	0	0.000608085	0.000550719	0	0.000424512	8.24689E-09	2.28509E-08	3.10978E-08	0.0310978
397466.283767877.2	397466.28	3767877	0	0	0	0	0	0	0.006255145	0.005665037	0	0.004366799	8.48326E-08	2.35059E-07	3.19891E-07	0.3198913
397566.283767877.2	397566.28	3767877	0	0	0	0	0	0	0.003931185	0.003560319	0	0.002744412	5.3315E-08	1.47728E-07	2.01043E-07	0.2010428
397666.283767877.2	397666.28	3767877	0	0	0	0	0	0	0.002356013	0.002133748	0	0.001644764	3.19524E-08	8.85354E-08	1.20488E-07	0.1204877
397766.283767877.2	397766.28	3767877	0	0	0	0	0	0	0.001606558	0.001454996	0	0.001121559	2.17882E-08	6.0372E-08	8.21602E-08	0.0821602
397866.283767877.2	397866.28	3767877	0	0	0	0	0	0	0.001265386	0.00114601	0	0.000883383	1.71612E-08	4.75513E-08	6.47125E-08	0.0647125
396166.283767977.2	396166.28	3767977	0	0	0	0	0	0	0.000304577	0.000275843	0	0.000212629	4.13069E-09	1.14455E-08	1.55762E-08	0.0155762
396266.283767977.2	396266.28	3767977	0	0	0	0	0	0	0.000356197	0.000322593	0	0.000248666	4.83076E-09	1.33853E-08	1.82161E-08	0.0182161
396366.283767977.2	396366.28	3767977	0	0	0	0	0	0	0.000421506	0.000381741	0	0.000294259	5.71649E-09	1.58395E-08	2.1556E-08	0.021556
396466.283767977.2	396466.28	3767977	0	0	0	0	0	0	0.000504245	0.000456674	0	0.00035202	6.83859E-09	1.89487E-08	2.57873E-08	0.0257873
397466.283767977.2	397466.28	3767977	0	0	0	0	0	0	0.012973131	0.011749251	0	0.009056714	1.75942E-07	4.8751E-07	6.63453E-07	0.6634527
397566.283767977.2	397566.28	3767977	0	0	0	0	0	0	0.005803321	0.005255838	0	0.004051375	7.8705E-08	2.1808E-07	2.96785E-07	0.2967849
397666.283767977.2	397666.28	3767977	0	0	0	0	0	0	0.003071745	0.002781958	0	0.002144426	4.16592E-08	1.15431E-07	1.57091E-07	0.1570907
397766.283767977.2	397766.28	3767977	0	0	0	0	0	0	0.002240887	0.002029483	0	0.001564393	3.0391E-08	8.42091E-08	1.146E-07	0.1146001
397866.283767977.2	397866.28	3767977	0	0	0	0	0	0	0.001460513	0.001322729	0	0.001019604	1.98076E-08	5.48838E-08	7.46914E-08	0.0746914
396166.283768077.2	396166.28	3768077	0	0	0	0	0	0	0.000306847	0.000277899	0	0.000214214	4.16148E-09	1.15309E-08	1.56923E-08	0.0156923

-Unitigated Administrative Building and Water Quality Laboratory Rehabilitatio			Demolition - 2025	Demolition - 2026	ite Preparation - 202	te Preparation - 202	Grading - 2025	Grading - 2026	nfrastructure - 202	nfrastructure - 202	Paving - 2025	itectural Coating -	Child Risk			
Unique Identifier	X (UTM)	Y (UTM)	1900	1900	1900	1900	1900	1900	2025	2026	1900	2026	3rd Trimester	0<2	Total	per million
396266.283768077.2	396266.28	3768077	0	0	0	0	0	0	0.00035446	0.000321021	0	0.000247454	4.80721E-09	1.33201E-08	1.81273E-08	0.0181273
396366.283768077.2	396366.28	3768077	0	0	0	0	0	0	0.000419503	0.000379927	0	0.00029286	5.68932E-09	1.57643E-08	2.14536E-08	0.0214536
396466.283768077.2	396466.28	3768077	0	0	0	0	0	0	0.00050765	0.000459759	0	0.000354397	6.88478E-09	1.90767E-08	2.59615E-08	0.0259615
397466.283768077.2	397466.28	3768077	0	0	0	0	0	0	0.041394807	0.037489637	0	0.028898262	5.61399E-07	1.55555E-06	2.11695E-06	2.1169519
397566.283768077.2	397566.28	3768077	0	0	0	0	0	0	0.01161539	0.010519599	0	0.008108857	1.57529E-07	4.36489E-07	5.94017E-07	0.5940171
397666.283768077.2	397666.28	3768077	0	0	0	0	0	0	0.00496298	0.004494775	0	0.003464722	6.73082E-08	1.86501E-07	2.53809E-07	0.2538094
397766.283768077.2	397766.28	3768077	0	0	0	0	0	0	0.002718687	0.002462207	0	0.001897952	3.6871E-08	1.02164E-07	1.39035E-07	0.1390351
397866.283768077.2	397866.28	3768077	0	0	0	0	0	0	0.001696709	0.001536642	0	0.001184495	2.30109E-08	6.37597E-08	8.67706E-08	0.0867706
396166.283768177.2	396166.28	3768177	0	0	0	0	0	0	0.000304043	0.000275359	0	0.000212256	4.12344E-09	1.14255E-08	1.55489E-08	0.0155489
396266.283768177.2	396266.28	3768177	0	0	0	0	0	0	0.000352324	0.000319085	0	0.000245962	4.77823E-09	1.32398E-08	1.8018E-08	0.018018
396366.283768177.2	396366.28	3768177	0	0	0	0	0	0	0.000416364	0.000377084	0	0.000290669	5.64675E-09	1.56463E-08	2.12931E-08	0.0212931
396466.283768177.2	396466.28	3768177	0	0	0	0	0	0	0.000500438	0.000453227	0	0.000349363	6.78697E-09	1.88057E-08	2.55927E-08	0.0255927
397466.283768177.2	397466.28	3768177	0	0	0	0	0	0	0.05218595	0.047262747	0	0.036431701	7.07749E-07	1.96107E-06	2.66882E-06	2.6688166
397566.283768177.2	397566.28	3768177	0	0	0	0	0	0	0.014489138	0.013122238	0	0.010115058	1.96503E-07	5.44479E-07	7.40982E-07	0.740982
397666.283768177.2	397666.28	3768177	0	0	0	0	0	0	0.0059895	0.005424453	0	0.004181349	8.12299E-08	2.25076E-07	3.06306E-07	0.3063061
397766.283768177.2	397766.28	3768177	0	0	0	0	0	0	0.003224869	0.002920636	0	0.002251323	4.37359E-08	1.21186E-07	1.64921E-07	0.1649215
397866.283768177.2	397866.28	3768177	0	0	0	0	0	0	0.001915141	0.001734468	0	0.001336986	2.59733E-08	7.19681E-08	9.79413E-08	0.0979413
396166.283768277.2	396166.28	3768277	0	0	0	0	0	0	0.000286747	0.000259695	0	0.000200182	3.88888E-09	1.07755E-08	1.46644E-08	0.0146644
396266.283768277.2	396266.28	3768277	0	0	0	0	0	0	0.000343843	0.000311405	0	0.000240041	4.66321E-09	1.29211E-08	1.75843E-08	0.0175843
396366.283768277.2	396366.28	3768277	0	0	0	0	0	0	0.000405012	0.000366803	0	0.000282744	5.49279E-09	1.52197E-08	2.07125E-08	0.0207125
396466.283768277.2	396466.28	3768277	0	0	0	0	0	0	0.00048528	0.000439498	0	0.00033878	6.58139E-09	1.82361E-08	2.48174E-08	0.0248174
397366.283768277.2	397366.28	3768277	0	0	0	0	0	0	0.026918491	0.024379011	0	0.018792154	3.6507E-07	1.01156E-06	1.37663E-06	1.3766256
397466.283768277.2	397466.28	3768277	0	0	0	0	0	0	0.02325609	0.021062119	0	0.016235383	3.154E-07	8.73928E-07	1.18933E-06	1.1893285
397566.283768277.2	397566.28	3768277	0	0	0	0	0	0	0.012327116	0.01116418	0	0.008605722	1.67181E-07	4.63234E-07	6.30415E-07	0.6304151
397666.283768277.2	397666.28	3768277	0	0	0	0	0	0	0.006087998	0.005513659	0	0.004250112	8.25658E-08	2.28778E-07	3.11343E-07	0.3113434
397766.283768277.2	397766.28	3768277	0	0	0	0	0	0	0.003405838	0.003084533	0	0.002377661	4.61902E-08	1.27986E-07	1.74176E-07	0.1741763
397866.283768277.2	397866.28	3768277	0	0	0	0	0	0	0.002163023	0.001958964	0	0.001510035	2.9335E-08	8.12831E-08	1.10618E-07	0.1106181
396166.283768377.2	396166.28	3768377	0	0	0	0	0	0	0.000266513	0.00024137	0	0.000186056	3.61447E-09	1.00152E-08	1.36296E-08	0.0136296
396266.283768377.2	396266.28	3768377	0	0	0	0	0	0	0.000333425	0.00030197	0	0.000232769	4.52193E-09	1.25296E-08	1.70515E-08	0.0170515
396366.283768377.2	396366.28	3768377	0	0	0	0	0	0	0.00038992	0.000353135	0	0.000272208	5.28811E-09	1.46526E-08	1.99407E-08	0.0199407
396466.283768377.2	396466.28	3768377	0	0	0	0	0	0	0.000464111	0.000420327	0	0.000324002	6.2943E-09	1.74406E-08	2.37349E-08	0.0237349
397266.283768377.2	397266.28	3768377	0	0	0	0	0	0	0.007230312	0.006548207	0	0.005047576	9.80579E-08	2.71704E-07	3.69762E-07	0.3697619
397366.283768377.2	397366.28	3768377	0	0	0	0	0	0	0.01086273	0.009837944	0	0.007583415	1.47321E-07	4.08205E-07	5.55526E-07	0.5555256
397466.283768377.2	397466.28	3768377	0	0	0	0	0	0	0.011298927	0.01023299	0	0.00788793	1.53237E-07	4.24596E-07	5.77833E-07	0.577833
397566.283768377.2	397566.28	3768377	0	0	0	0	0	0	0.008401139	0.007608579	0	0.005864946	1.13937E-07	3.15702E-07	4.29639E-07	0.4296386
397666.283768377.2	397666.28	3768377	0	0	0	0	0	0	0.005401782	0.00489218	0	0.003771055	7.32593E-08	2.02991E-07	2.7625E-07	0.2762499
397766.283768377.2	397766.28	3768377	0	0	0	0	0	0	0.003408376	0.003086831	0	0.002379432	4.62246E-08	1.28082E-07	1.74306E-07	0.1743061
397866.283768377.2	397866.28	3768377	0	0	0	0	0	0	0.002284827	0.002069278	0	0.001595068	3.0987E-08	8.58603E-08	1.16847E-07	0.1168473
396166.283768477.2	396166.28	3768477	0	0	0	0	0	0	0.000256096	0.000231936	0	0.000178784	3.47318E-09	9.62368E-09	1.30969E-08	0.0130969
396266.283768477.2	396266.28	3768477	0	0	0	0	0	0	0.000317332	0.000287395	0	0.000221533	4.30367E-09	1.19248E-08	1.62285E-08	0.0162285
396366.283768477.2	396366.28	3768477	0	0	0	0	0	0	0.000355395	0.000321867	0	0.000248106	4.81989E-09	1.33552E-08	1.81751E-08	0.0181751
396466.283768477.2	396466.28	3768477	0	0	0	0	0	0	0.0004376	0.000396317	0	0.000305494	5.93475E-09	1.64443E-08	2.23791E-08	0.0223791
397166.283768477.2	397166.28	3768477	0	0	0	0	0	0	0.00288964	0.002617033	0	0.002017296	3.91895E-08	1.08588E-07	1.47778E-07	0.1477777
397266.283768477.2	397266.28	3768477	0	0	0	0	0	0	0.004310821	0.00390414	0	0.003009441	5.84636E-08	1.61994E-07	2.20458E-07	0.2204576
397366.283768477.2	397366.28	3768477	0	0	0	0	0	0	0.005750366	0.005207878	0	0.004014406	7.79868E-08	2.1609E-07	2.94077E-07	0.2940767
397466.283768477.2	397466.28	3768477	0	0	0	0	0	0	0.006126462	0.005548494	0	0.004276964	8.30874E-08	2.30223E-07	3.1331E-07	0.3133105
397566.283768477.2	397566.28	3768477	0	0	0	0	0	0	0.005428159	0.004916069	0	0.00378947	7.3617E-08	2.03982E-07	2.77599E-07	0.2775989
397666.283768477.2	397666.28	3768477	0	0	0	0	0	0	0.004078365	0.003693614	0	0.00284716	5.5311E-08	1.53259E-07	2.0857E-07	0.2085697
397766.283768477.2	397766.28	3768477	0	0	0	0	0	0	0.002974583	0.002693962	0	0.002076595	4.03415E-08	1.1178E-07	1.52122E-07	0.1521217
397866.283768477.2	397866.28	3768477	0	0	0	0	0	0	0.002127364	0.001926669	0	0.001485141	2.88514E-08	7.99431E-08	1.08794E-07	0.1087945
396166.283768577.2	396166.28	3768577	0	0	0	0	0	0	0.000267381	0.000242157	0	0.000186662	3.62624E-09	1.00478E-08	1.3674E-08	0.013674
396266.283768577.2	396266.28	3768577	0	0	0	0	0	0	0.000275261	0.000249293	0	0.000192163	3.73311E-09	1.03439E-08	1.4077E-08	0.014077
396366.283768577.2	396366.28	3768577	0	0	0	0	0	0	0.000316063	0.000286246	0	0.000220648	4.28646E-09	1.18772E-08	1.61636E-08	0.0161636
396466.283768577.2	396466.28	3768577	0	0	0	0	0	0	0.000408417	0.000369888	0	0.000285122	5.53898E-09	1.53477E-08	2.08867E-08	0.0208867
396566.283768577.2	396566.28	3768577	0	0	0	0	0	0	0.000476398	0.000431455	0	0.00033258	6.46094E-09	1.79023E-08	2.43632E-08	0.0243632
396866.283768577.2	396866.28	3768577	0	0	0	0	0	0	0.000901777	0.000816704	0	0.000629543	1.223E-08	3.38874E-08	4.61174E-08	0.0461174
396966.283768577.2	396966.28	3768577	0	0	0	0	0	0	0.001165953	0.001055958	0	0.000813967	1.58127E-08	4.38147E-08	5.96274E-08	0.0596274
397066.283768577.2	397066.28	3768577	0	0	0	0	0	0	0.001539245	0.001394033	0	0.001074567	2.08753E-08	5.78425E-08	7.87178E-08	0.0787178
397166.283768577.2	397166.28	3768577	0	0	0	0	0	0	0.002094241	0.001896671	0	0.001462018	2.84022E-08	7.86984E-08	1.07101E-07	0.1071006
397266.283768577.2	397266.28	3768577	0	0	0	0	0	0	0.002812444	0.00254712	0	0.001963405	3.81425E-08	1.05687E-07	1.4383E-07	0.1438299
397366.283768577.2	397366.28	3768577	0	0	0	0	0	0	0.003541532	0.003207426	0	0.002472391	4.80305E-08	1.33085E-07	1.81116E-07	0.1811158
397466.283768577.2	397466.28	3768577	0	0	0	0	0	0	0.00373105	0.003379064	0	0.002604695	5.06007E-08	1.40207E-07	1.90808E-07	0.1908078
397566.283768577.2	397566.28	3768577	0	0	0	0	0	0	0.003653386	0.003308727	0	0.002550477	4.95474E-08	1.37289E-07	1.86836E-07	0.1868361
397666.283768577.2	397666.28	3768577	0	0	0	0	0	0	0.003069809	0.002780204	0	0.002143074	4.16329E-08	1.15359E-07	1.56992E-07	0.1569916
397766.283768577.2	397766.28	3768577	0	0	0	0	0	0	0.002393409	0.002167616	0	0.001670871	3.24596E-08	8.99406E-08	1.224E-07	0.1224002
397866.283768577.2	397866.28	3768577	0	0	0	0	0	0	0.001846293	0.001672114	0	0.001288921	2.50395E-08	6.93808E-08	9.44204E-08	0.0944204
396166.283768677.2	396166.28	3768677	0	0	0	0	0	0	0.000254359	0.000230363	0	0.000177572	3.44964E-09	9.55844E-09	1.30081E-08	0.0130081
396266.283768677.2	396266.28	3768677	0	0	0	0	0	0	0.000287949	0.000260784	0	0.000201021	3.90518E-09	1.08207E-08	1.47259E-08	0.0147259
396366.283768677.2	396366.28	3768677	0	0	0	0	0	0	0.000301104	0.000272698	0	0.000210205	4.08359E-09	1.1315E-08	1.53986E-08	0.0153986

-Unitigated Administrative Building and Water Quality Laboratory Rehabilitatio			Demolition - 2025	Demolition - 2026	ite Preparation - 202	te Preparation - 202	Grading - 2025	Grading - 2026	nfrastructure - 202	nfrastructure - 202	Paving - 2025	itectural Coating -	Child Risk			
Unique Identifier	X (UTM)	Y (UTM)	1900	1900	1900	1900	1900	1900	2025	2026	1900	2026	3rd Trimester	0<2	Total	per million
396466.283768677.2	396466.28	3768677	0	0	0	0	0	0	0.000378234	0.000342551	0	0.00026405	5.12963E-09	1.42134E-08	1.93431E-08	0.0193431
396566.283768677.2	396566.28	3768677	0	0	0	0	0	0	0.000441406	0.000399764	0	0.000308151	5.98637E-09	1.65874E-08	2.25737E-08	0.0225737
396666.283768677.2	396666.28	3768677	0	0	0	0	0	0	0.000522542	0.000473246	0	0.000364793	7.08674E-09	1.96363E-08	2.67231E-08	0.0267231
396766.283768677.2	396766.28	3768677	0	0	0	0	0	0	0.000628052	0.000568802	0	0.000438451	8.51768E-09	2.36012E-08	3.21189E-08	0.0321189
396866.283768677.2	396866.28	3768677	0	0	0	0	0	0	0.000770624	0.000697924	0	0.000537983	1.04512E-08	2.89589E-08	3.94101E-08	0.0394101
396966.283768677.2	396966.28	3768677	0	0	0	0	0	0	0.000962479	0.000871679	0	0.000671919	1.30532E-08	3.61685E-08	4.92217E-08	0.0492217
397066.283768677.2	397066.28	3768677	0	0	0	0	0	0	0.001222247	0.001106941	0	0.000853267	1.65762E-08	4.59302E-08	6.25064E-08	0.0625064
397166.283768677.2	397166.28	3768677	0	0	0	0	0	0	0.001554337	0.001407701	0	0.001085103	2.108E-08	5.84096E-08	7.94896E-08	0.0794896
397366.283768677.2	397366.28	3768677	0	0	0	0	0	0	0.002393276	0.002167495	0	0.001670777	3.24577E-08	8.99356E-08	1.22393E-07	0.1223934
397466.283768677.2	397466.28	3768677	0	0	0	0	0	0	0.002626399	0.002378626	0	0.001833524	3.56194E-08	9.86961E-08	1.34315E-07	0.1343154
397566.283768677.2	397566.28	3768677	0	0	0	0	0	0	0.002581324	0.002337803	0	0.001802056	3.50081E-08	9.70022E-08	1.3201E-07	0.1320102
397666.283768677.2	397666.28	3768677	0	0	0	0	0	0	0.002311539	0.002093469	0	0.001613716	3.13492E-08	8.68641E-08	1.18213E-07	0.1182133
397766.283768677.2	397766.28	3768677	0	0	0	0	0	0	0.001928497	0.001746563	0	0.001346309	2.61544E-08	7.247E-08	9.86243E-08	0.0986243
397866.283768677.2	397866.28	3768677	0	0	0	0	0	0	0.001569496	0.00142143	0	0.001095686	2.12856E-08	5.89792E-08	8.02648E-08	0.0802648
396166.283768777.2	396166.28	3768777	0	0	0	0	0	0	0.000242206	0.000219356	0	0.000169087	3.28481E-09	9.10172E-09	1.23865E-08	0.0123865
396266.283768777.2	396266.28	3768777	0	0	0	0	0	0	0.000270987	0.000245422	0	0.00018918	3.67514E-09	1.01833E-08	1.38584E-08	0.0138584
396366.283768777.2	396366.28	3768777	0	0	0	0	0	0	0.000289752	0.000262417	0	0.00020228	3.92963E-09	1.08884E-08	1.48181E-08	0.0148181
396466.283768777.2	396466.28	3768777	0	0	0	0	0	0	0.000349586	0.000316606	0	0.00024405	4.7411E-09	1.31369E-08	1.7878E-08	0.017878
396566.283768777.2	396566.28	3768777	0	0	0	0	0	0	0.000401406	0.000363537	0	0.000280227	5.44389E-09	1.50842E-08	2.05281E-08	0.0205281
396666.283768777.2	396666.28	3768777	0	0	0	0	0	0	0.000467784	0.000423653	0	0.000326566	6.34411E-09	1.75786E-08	2.39227E-08	0.0239227
396766.283768777.2	396766.28	3768777	0	0	0	0	0	0	0.000553527	0.000501308	0	0.000386425	7.50697E-09	2.08007E-08	2.83077E-08	0.0283077
396866.283768777.2	396866.28	3768777	0	0	0	0	0	0	0.000664246	0.000601581	0	0.000463719	9.00854E-09	2.49613E-08	3.39699E-08	0.0339699
396966.283768777.2	396966.28	3768777	0	0	0	0	0	0	0.000805015	0.00072907	0	0.000561992	1.09177E-08	3.02512E-08	4.11689E-08	0.0411689
397066.283768777.2	397066.28	3768777	0	0	0	0	0	0	0.000983447	0.000890669	0	0.000686558	1.33376E-08	3.69564E-08	5.0294E-08	0.050294
397166.283768777.2	397166.28	3768777	0	0	0	0	0	0	0.001197139	0.001084201	0	0.000835738	1.62357E-08	4.49866E-08	6.12223E-08	0.0612223
397266.283768777.2	397266.28	3768777	0	0	0	0	0	0	0.001462383	0.001324422	0	0.001020909	1.98329E-08	5.49541E-08	7.4787E-08	0.074787
397366.283768777.2	397366.28	3768777	0	0	0	0	0	0	0.001709063	0.001547831	0	0.001193119	2.31784E-08	6.4224E-08	8.74024E-08	0.0874024
397466.283768777.2	397466.28	3768777	0	0	0	0	0	0	0.001864323	0.001688443	0	0.001301508	2.52841E-08	7.00584E-08	9.53424E-08	0.0953424
397566.283768777.2	397566.28	3768777	0	0	0	0	0	0	0.001878213	0.001701023	0	0.001311205	2.54724E-08	7.05804E-08	9.60528E-08	0.0960528
397666.283768777.2	397666.28	3768777	0	0	0	0	0	0	0.001753203	0.001587807	0	0.001223934	2.3777E-08	6.58827E-08	8.96597E-08	0.0896597
397766.283768777.2	397766.28	3768777	0	0	0	0	0	0	0.00154038	0.001395061	0	0.00107536	2.08907E-08	5.78851E-08	7.87758E-08	0.0787758
397866.283768777.2	397866.28	3768777	0	0	0	0	0	0	0.001312999	0.001189132	0	0.000916622	1.7807E-08	4.93405E-08	6.71475E-08	0.0671475
396166.283768877.2	396166.28	3768877	0	0	0	0	0	0	0.000228249	0.000206716	0	0.000159344	3.09553E-09	8.57725E-09	1.16728E-08	0.0116728
396266.283768877.2	396266.28	3768877	0	0	0	0	0	0	0.00025496	0.000230908	0	0.000177991	3.45779E-09	9.58102E-09	1.30388E-08	0.0130388
396366.283768877.2	396366.28	3768877	0	0	0	0	0	0	0.000284677	0.000257821	0	0.000198737	3.8608E-09	1.06977E-08	1.45585E-08	0.0145585
396466.283768877.2	396466.28	3768877	0	0	0	0	0	0	0.000323141	0.000292656	0	0.000225589	4.38246E-09	1.21432E-08	1.65256E-08	0.0165256
396566.283768877.2	396566.28	3768877	0	0	0	0	0	0	0.000367616	0.000332935	0	0.000256637	4.98563E-09	1.38144E-08	1.88001E-08	0.0188001
396666.283768877.2	396666.28	3768877	0	0	0	0	0	0	0.000421439	0.000381681	0	0.000294212	5.71558E-09	1.5837E-08	2.15526E-08	0.0215526
396766.283768877.2	396766.28	3768877	0	0	0	0	0	0	0.000491624	0.000445244	0	0.000343209	6.66743E-09	1.84745E-08	2.51419E-08	0.0251419
396866.283768877.2	396866.28	3768877	0	0	0	0	0	0	0.00058478	0.000529612	0	0.000408242	7.93081E-09	2.19751E-08	2.99059E-08	0.0299059
396966.283768877.2	396966.28	3768877	0	0	0	0	0	0	0.00069049	0.000625349	0	0.00048204	9.36446E-09	2.59476E-08	3.5312E-08	0.035312
397066.283768877.2	397066.28	3768877	0	0	0	0	0	0	0.000810691	0.000734211	0	0.000565954	1.09946E-08	3.04645E-08	4.14592E-08	0.0414592
397166.283768877.2	397166.28	3768877	0	0	0	0	0	0	0.000955668	0.00086551	0	0.000667164	1.29608E-08	3.59125E-08	4.88733E-08	0.0488733
397266.283768877.2	397266.28	3768877	0	0	0	0	0	0	0.001125619	0.001019428	0	0.000785809	1.52657E-08	4.2299E-08	5.75647E-08	0.0575647
397366.283768877.2	397366.28	3768877	0	0	0	0	0	0	0.001277807	0.001157259	0	0.000892054	1.73297E-08	4.8018E-08	6.53477E-08	0.0653477
397466.283768877.2	397466.28	3768877	0	0	0	0	0	0	0.001388392	0.001257412	0	0.000969255	1.88295E-08	5.21736E-08	7.10031E-08	0.0710031
397566.283768877.2	397566.28	3768877	0	0	0	0	0	0	0.001420513	0.001286502	0	0.000991679	1.92651E-08	5.33807E-08	7.26458E-08	0.0726458
397666.283768877.2	397666.28	3768877	0	0	0	0	0	0	0.001356005	0.00122808	0	0.000946645	1.83902E-08	5.09566E-08	6.93468E-08	0.0693468
397766.283768877.2	397766.28	3768877	0	0	0	0	0	0	0.001236404	0.001119763	0	0.00086315	1.67682E-08	4.64622E-08	6.32304E-08	0.0632304
397866.283768877.2	397866.28	3768877	0	0	0	0	0	0	0.001096503	0.00099306	0	0.000765484	1.48708E-08	4.12049E-08	5.60758E-08	0.0560758
3964253767739	396425	3767739	0	0	0	0	0	0	0.000445079	0.00040309	0	0.000310715	6.03619E-09	1.67254E-08	2.27616E-08	0.0227616
3964753767739	396475	3767739	0	0	0	0	0	0	0.000487016	0.000441071	0	0.000339992	6.60494E-09	1.83013E-08	2.49062E-08	0.0249062
3965253767739	396525	3767739	0	0	0	0	0	0	0.000531424	0.000481289	0	0.000370994	7.2072E-09	1.99701E-08	2.71773E-08	0.0271773
3965753767739	396575	3767739	0	0	0	0	0	0	0.000587718	0.000532273	0	0.000410294	7.97066E-09	2.20855E-08	3.00562E-08	0.0300562
3966253767739	396625	3767739	0	0	0	0	0	0	0.000639404	0.000579083	0	0.000446377	8.67164E-09	2.40278E-08	3.26995E-08	0.0326995
3966753767739	396675	3767739	0	0	0	0	0	0	0.000712327	0.000645126	0	0.000497285	9.66061E-09	2.67681E-08	3.64287E-08	0.0364287
3967253767739	396725	3767739	0	0	0	0	0	0	0.000816434	0.000739412	0	0.000569964	1.10725E-08	3.06803E-08	4.17529E-08	0.0417529
3967753767739	396775	3767739	0	0	0	0	0	0	0.000915734	0.000829344	0	0.000639286	1.24192E-08	3.44119E-08	4.68311E-08	0.0468311
3968253767739	396825	3767739	0	0	0	0	0	0	0.001054366	0.000954898	0	0.000736067	1.42994E-08	3.96215E-08	5.39208E-08	0.0539208
3968753767739	396875	3767739	0	0	0	0	0	0	0.001216772	0.001101982	0	0.000849444	1.65019E-08	4.57244E-08	6.22263E-08	0.0622263
3969253767739	396925	3767739	0	0	0	0	0	0	0.001395337	0.001263702	0	0.000974103	1.89236E-08	5.24346E-08	7.13583E-08	0.0713583
3969753767739	396975	3767739	0	0	0	0	0	0	0.001597877	0.001447134	0	0.001115499	2.16705E-08	6.00457E-08	8.17162E-08	0.0817162
3970253767739	397025	3767739	0	0	0	0	0	0	0.00181878	0.001647197	0	0.001269714	2.46664E-08	6.8347E-08	9.30134E-08	0.0930134
3970753767739	397075	3767739	0	0	0	0	0	0	0.00204536	0.001852401	0	0.001427893	2.77393E-08	7.68615E-08	1.04601E-07	0.1046007
3971253767739	397125	3767739	0	0	0	0	0	0	0.0022688	0.002054763	0	0.00158388	3.07696E-08	8.5258E-08	1.16028E-07	0.1160276
3971753767739	397175	3767739	0	0	0	0	0	0	0.002483293	0.00224902	0	0.00173362	3.36786E-08	9.33183E-08	1.26997E-07	0.1269969
3972253767739	397225	3767739	0	0	0	0	0	0	0.002658587	0.002407777	0	0.001855995	3.60559E-08	9.99056E-08	1.35962E-07	0.1359615
3972753767739	397275	3767739	0	0	0	0	0	0	0.00278994	0.002526738	0	0.001947694	3.78373E-08	1.04842E-07	1.42679E-07	0.142679
3973253767739	397325	3767739	0	0	0	0	0	0	0.002810107	0.002545003	0	0.001961773	3.81108E-08	1.056E-07	1.4371E-07	0.1437103

-Unitigated Administrative Building and Water Quality Laboratory Rehabilitatio			Demolition - 2025	Demolition - 2026	ite Preparation - 202	te Preparation - 202	Grading - 2025	Grading - 2026	nfrastructure - 202	nfrastructure - 202	Paving - 2025	itectural Coating -	Child Risk			
Unique Identifier	X (UTM)	Y (UTM)	1900	1900	1900	1900	1900	1900	2025	2026	1900	2026	3rd Trimester	0<2	Total	per million
3973753767739	397375	3767739	0	0	0	0	0	0	0.002747469	0.002488274	0	0.001918044	3.72613E-08	1.03246E-07	1.40507E-07	0.140507
3974253767739	397425	3767739	0	0	0	0	0	0	0.002634814	0.002386246	0	0.001839398	3.57335E-08	9.90122E-08	1.34746E-07	0.1347457
3974753767739	397475	3767739	0	0	0	0	0	0	0.002479687	0.002245754	0	0.001731102	3.36297E-08	9.31828E-08	1.26812E-07	0.1268125
3975253767739	397525	3767739	0	0	0	0	0	0	0.002270069	0.002055912	0	0.001584765	3.07868E-08	8.53057E-08	1.16093E-07	0.1160925
3964253767789	396425	3767789	0	0	0	0	0	0	0.000453359	0.00041059	0	0.000316496	6.14849E-09	1.70365E-08	2.3185E-08	0.023185
3964753767789	396475	3767789	0	0	0	0	0	0	0.000495296	0.00044857	0	0.000345773	6.71724E-09	1.86125E-08	2.53297E-08	0.0253297
3965253767789	396525	3767789	0	0	0	0	0	0	0.000541641	0.000490542	0	0.000378126	7.34576E-09	2.0354E-08	2.76998E-08	0.0276998
3965753767789	396575	3767789	0	0	0	0	0	0	0.000594796	0.000538683	0	0.000415235	8.06666E-09	2.23515E-08	3.04182E-08	0.0304182
3966253767789	396625	3767789	0	0	0	0	0	0	0.000661842	0.000599404	0	0.000462041	8.97594E-09	2.4871E-08	3.38469E-08	0.0338469
3966753767789	396675	3767789	0	0	0	0	0	0	0.00074645	0.000676031	0	0.000521107	1.01234E-08	2.80505E-08	3.81739E-08	0.0381739
3967253767789	396725	3767789	0	0	0	0	0	0	0.000858839	0.000777816	0	0.000599567	1.16476E-08	3.22738E-08	4.39215E-08	0.0439215
3967753767789	396775	3767789	0	0	0	0	0	0	0.000980376	0.000887887	0	0.000684413	1.32959E-08	3.6841E-08	5.01369E-08	0.0501369
3968253767789	396825	3767789	0	0	0	0	0	0	0.001136504	0.001029286	0	0.000793408	1.54133E-08	4.27081E-08	5.81214E-08	0.0581214
3968753767789	396875	3767789	0	0	0	0	0	0	0.001322215	0.001197478	0	0.000923056	1.7932E-08	4.96868E-08	6.76188E-08	0.0676188
3969253767789	396925	3767789	0	0	0	0	0	0	0.001543319	0.001397722	0	0.001077411	2.09306E-08	5.79955E-08	7.89261E-08	0.0789261
3969753767789	396975	3767789	0	0	0	0	0	0	0.001809364	0.001638669	0	0.001263141	2.45387E-08	6.79931E-08	9.25318E-08	0.0925318
3970253767789	397025	3767789	0	0	0	0	0	0	0.002117747	0.00191796	0	0.001478427	2.8721E-08	7.95817E-08	1.08303E-07	0.1083027
3970753767789	397075	3767789	0	0	0	0	0	0	0.002461256	0.002229062	0	0.001718235	3.33797E-08	9.24902E-08	1.2587E-07	0.1258699
3971253767789	397125	3767789	0	0	0	0	0	0	0.002822595	0.002556312	0	0.001970491	3.82802E-08	1.06069E-07	1.44349E-07	0.144349
3971753767789	397175	3767789	0	0	0	0	0	0	0.003184668	0.002884228	0	0.002223259	4.31906E-08	1.19675E-07	1.62866E-07	0.1628656
3972253767789	397225	3767789	0	0	0	0	0	0	0.003504337	0.003173739	0	0.002446424	4.7526E-08	1.31688E-07	1.79214E-07	0.1792136
3972753767789	397275	3767789	0	0	0	0	0	0	0.003768646	0.003413114	0	0.002630942	5.11106E-08	1.4162E-07	1.92731E-07	0.1927305
3973253767789	397325	3767789	0	0	0	0	0	0	0.003860734	0.003496514	0	0.002695229	5.23595E-08	1.4508E-07	1.9744E-07	0.1974399
3973753767789	397375	3767789	0	0	0	0	0	0	0.003778596	0.003422125	0	0.002637888	5.12455E-08	1.41994E-07	1.93239E-07	0.1932394
3974253767789	397425	3767789	0	0	0	0	0	0	0.003571382	0.00323446	0	0.002493229	4.84353E-08	1.34207E-07	1.82642E-07	0.1826423
3974753767789	397475	3767789	0	0	0	0	0	0	0.003204034	0.002901766	0	0.002236778	4.34533E-08	1.20403E-07	1.63856E-07	0.1638559
3975253767789	397525	3767789	0	0	0	0	0	0	0.002892846	0.002619936	0	0.002019534	3.92329E-08	1.08709E-07	1.47942E-07	0.1479416
3964253767839	396425	3767839	0	0	0	0	0	0	0.000460238	0.000416819	0	0.000321298	6.24177E-09	1.7295E-08	2.35368E-08	0.0235368
3964753767839	396475	3767839	0	0	0	0	0	0	0.000505113	0.000457461	0	0.000352626	6.85037E-09	1.89814E-08	2.58317E-08	0.0258317
3965253767839	396525	3767839	0	0	0	0	0	0	0.000549654	0.0004978	0	0.000383721	7.45444E-09	2.06552E-08	2.81096E-08	0.0281096
3965753767839	396575	3767839	0	0	0	0	0	0	0.000609621	0.00055211	0	0.000425585	8.26772E-09	2.29086E-08	3.11763E-08	0.0311763
3966253767839	396625	3767839	0	0	0	0	0	0	0.000682276	0.000617911	0	0.000476306	9.25307E-09	2.56389E-08	3.4892E-08	0.034892
3966753767839	396675	3767839	0	0	0	0	0	0	0.00078625	0.000712076	0	0.000548892	1.06632E-08	2.95461E-08	4.02093E-08	0.0402093
3967253767839	396725	3767839	0	0	0	0	0	0	0.000899907	0.000815011	0	0.000628237	1.22046E-08	3.38171E-08	4.60217E-08	0.0460217
3967753767839	396775	3767839	0	0	0	0	0	0	0.001037471	0.000939597	0	0.000724272	1.40702E-08	3.89866E-08	5.30568E-08	0.0530568
3968253767839	396825	3767839	0	0	0	0	0	0	0.001209292	0.001095208	0	0.000844223	1.64005E-08	4.54433E-08	6.18438E-08	0.0618438
3968753767839	396875	3767839	0	0	0	0	0	0	0.001423718	0.001289405	0	0.000993916	1.93085E-08	5.35011E-08	7.28097E-08	0.0728097
3969253767839	396925	3767839	0	0	0	0	0	0	0.001690766	0.001531259	0	0.001180346	2.29303E-08	6.35364E-08	8.64666E-08	0.0864666
3969753767839	396975	3767839	0	0	0	0	0	0	0.002025259	0.001834197	0	0.00141386	2.74667E-08	7.61061E-08	1.03573E-07	0.1035728
3970253767839	397025	3767839	0	0	0	0	0	0	0.002434344	0.002204689	0	0.001699448	3.30147E-08	9.14789E-08	1.24494E-07	0.1244936
3970753767839	397075	3767839	0	0	0	0	0	0	0.002942596	0.002664992	0	0.002054265	3.99077E-08	1.10578E-07	1.50486E-07	0.1504859
3971253767839	397125	3767839	0	0	0	0	0	0	0.003509612	0.003178517	0	0.002450107	4.75976E-08	1.31886E-07	1.79483E-07	0.1794834
3971753767839	397175	3767839	0	0	0	0	0	0	0.004168382	0.003775139	0	0.002910003	5.65318E-08	1.56641E-07	2.13173E-07	0.2131732
3972253767839	397225	3767839	0	0	0	0	0	0	0.004823947	0.004368858	0	0.003367661	6.54226E-08	1.81277E-07	2.46699E-07	0.2466992
3972753767839	397275	3767839	0	0	0	0	0	0	0.005277974	0.004780052	0	0.003684624	7.15802E-08	1.98338E-07	2.69918E-07	0.2699184
3973253767839	397325	3767839	0	0	0	0	0	0	0.005374202	0.004867202	0	0.003751802	7.28852E-08	2.01954E-07	2.74839E-07	0.2748395
3973753767839	397375	3767839	0	0	0	0	0	0	0.005517242	0.004996747	0	0.003851659	7.48251E-08	2.07329E-07	2.82155E-07	0.2821546
3974753767839	397475	3767839	0	0	0	0	0	0	0.004561508	0.004131177	0	0.003184449	6.18634E-08	1.71414E-07	2.33278E-07	0.2332779
3975253767839	397525	3767839	0	0	0	0	0	0	0.003750683	0.003396845	0	0.002618401	5.0867E-08	1.40945E-07	1.91812E-07	0.1918119
3964253767889	396425	3767889	0	0	0	0	0	0	0.000465313	0.000421415	0	0.000324841	6.3106E-09	1.74857E-08	2.37963E-08	0.0237963
3964753767889	396475	3767889	0	0	0	0	0	0	0.00050558	0.000457884	0	0.000352952	6.85671E-09	1.89989E-08	2.58556E-08	0.0258556
3965253767889	396525	3767889	0	0	0	0	0	0	0.000558536	0.000505844	0	0.000389921	7.57489E-09	2.09889E-08	2.85638E-08	0.0285638
3965753767889	396575	3767889	0	0	0	0	0	0	0.000625715	0.000566685	0	0.00043682	8.48598E-09	2.35134E-08	3.19994E-08	0.0319994
3974753767889	397475	3767889	0	0	0	0	0	0	0.006527067	0.005911306	0	0.004556632	8.85205E-08	2.45277E-07	3.33798E-07	0.3337976
3975253767889	397525	3767889	0	0	0	0	0	0	0.004786685	0.004335111	0	0.003341648	6.49173E-08	1.79876E-07	2.44794E-07	0.2447935
3964253767939	396425	3767939	0	0	0	0	0	0	0.000468718	0.0004245	0	0.000327219	6.35679E-09	1.76137E-08	2.39705E-08	0.0239705
3964753767939	396475	3767939	0	0	0	0	0	0	0.000510255	0.000462117	0	0.000356216	6.9201E-09	1.91746E-08	2.60947E-08	0.0260947
3965253767939	396525	3767939	0	0	0	0	0	0	0.000566415	0.00051298	0	0.000395422	7.68176E-09	2.1285E-08	2.89668E-08	0.0289668
3974753767939	397475	3767939	0	0	0	0	0	0	0.008724748	0.007901659	0	0.006090862	1.18326E-07	3.27863E-07	4.46188E-07	0.4461881
3975253767939	397525	3767939	0	0	0	0	0	0	0.006413009	0.005808008	0	0.004477006	8.69736E-08	2.40991E-07	3.27965E-07	0.3279646
3964253767989	396425	3767989	0	0	0	0	0	0	0.000467183	0.000423109	0	0.000326146	6.33596E-09	1.7556E-08	2.3892E-08	0.023892
3964753767989	396475	3767989	0	0	0	0	0	0	0.000513794	0.000465323	0	0.000358686	6.9681E-09	1.93076E-08	2.62757E-08	0.0262757
3974753767989	397475	3767989	0	0	0	0	0	0	0.013075436	0.011841904	0	0.009128135	1.7733E-07	4.91355E-07	6.68685E-07	0.6686846
3975253767989	397525	3767989	0	0	0	0	0	0	0.008558002	0.007750644	0	0.005974454	1.16064E-07	3.21597E-07	4.37661E-07	0.4376607
3964253768039	396425	3768039	0	0	0	0	0	0	0.000467516	0.000423411	0	0.000326379	6.34048E-09	1.75685E-08	2.3909E-08	0.023909
3964753768039	396475	3768039	0	0	0	0	0	0	0.000516064	0.000467379	0	0.000360271	6.9989E-09	1.93929E-08	2.63918E-08	0.0263918
3974753768039	397475	3768039	0	0	0	0	0	0	0.023558062	0.021335604	0	0.016446194	3.19496E-07	8.85276E-07	1.20477E-06	1.2047715
3975253768039	397525	3768039	0	0	0	0	0	0	0.01412446	0.012791964	0	0.009860472	1.91557E-07	5.30775E-07	7.22332E-07	0.7223322
3964253768089	396425	3768089	0	0	0	0	0	0	0.000467116	0.000423048	0	0.0003261	6.33505E-09	1.75535E-08	2.38885E-08	0.0238885

-Unitigated Administrative Building and Water Quality Laboratory Rehabilitatio			Demolition - 2025	Demolition - 2026	ite Preparation - 202	te Preparation - 202	Grading - 2025	Grading - 2026	nfrastructure - 202	nfrastructure - 202	Paving - 2025	itectural Coating -	Child Risk			
Unique Identifier	X (UTM)	Y (UTM)	1900	1900	1900	1900	1900	1900	2025	2026	1900	2026	3rd Trimester	0<2	Total	per million
3964753768089	396475	3768089	0	0	0	0	0	0	0.000516398	0.000467682	0	0.000360505	7.00342E-09	1.94055E-08	2.64089E-08	0.0264089
3974753768089	397475	3768089	0	0	0	0	0	0	0.039166541	0.035471585	0	0.02734268	5.31179E-07	1.47182E-06	2.003E-06	2.0029972
3975253768089	397525	3768089	0	0	0	0	0	0	0.019858799	0.017985327	0	0.01386369	2.69326E-07	7.46263E-07	1.01559E-06	1.0155893
3964253768139	396425	3768139	0	0	0	0	0	0	0.00046785	0.000423714	0	0.000326613	6.34501E-09	1.75811E-08	2.39261E-08	0.0239261
3964753768139	396475	3768139	0	0	0	0	0	0	0.000513059	0.000464658	0	0.000358174	6.95814E-09	1.928E-08	2.62381E-08	0.0262381
3974253768139	397425	3768139	0	0	0	0	0	0	0.158383175	0.143441366	0	0.110569387	2.148E-06	5.9518E-06	8.0998E-06	8.0997977
3974753768139	397475	3768139	0	0	0	0	0	0	0.051804044	0.04691687	0	0.036165087	7.02569E-07	1.94672E-06	2.64929E-06	2.6492857
3975253768139	397525	3768139	0	0	0	0	0	0	0.023278794	0.021082682	0	0.016251234	3.15708E-07	8.74781E-07	1.19049E-06	1.1904896
3964253768189	396425	3768189	0	0	0	0	0	0	0.000462842	0.000419178	0	0.000323116	6.27709E-09	1.73929E-08	2.367E-08	0.02367
3964753768189	396475	3768189	0	0	0	0	0	0	0.00050765	0.000459759	0	0.000354397	6.88478E-09	1.90767E-08	2.59615E-08	0.0259615
3973753768189	397375	3768189	0	0	0	0	0	0	0.109185497	0.098884979	0	0.076223838	1.48078E-06	4.10302E-06	5.5838E-06	5.5838029
3974253768189	397425	3768189	0	0	0	0	0	0	0.075775933	0.06862726	0	0.052900179	1.02768E-06	2.84754E-06	3.87522E-06	3.8752205
3974753768189	397475	3768189	0	0	0	0	0	0	0.043049179	0.038987935	0	0.0300532	5.83835E-07	1.61772E-06	2.20156E-06	2.2015573
3975253768189	397525	3768189	0	0	0	0	0	0	0.023077057	0.020899976	0	0.016110398	3.12972E-07	8.672E-07	1.18017E-06	1.1801726
3964253768239	396425	3768239	0	0	0	0	0	0	0.000456231	0.00041319	0	0.000318501	6.18743E-09	1.71445E-08	2.33319E-08	0.0233319
3964753768239	396475	3768239	0	0	0	0	0	0	0.000500305	0.000453106	0	0.000349269	6.78516E-09	1.88007E-08	2.55858E-08	0.0255858
3973753768239	397375	3768239	0	0	0	0	0	0	0.045082451	0.04082939	0	0.031472655	6.11411E-07	1.69413E-06	2.30554E-06	2.3055399
3974253768239	397425	3768239	0	0	0	0	0	0	0.037196842	0.033687706	0	0.025967607	5.04466E-07	1.3978E-06	1.90227E-06	1.9022658
3974753768239	397475	3768239	0	0	0	0	0	0	0.026800093	0.024271782	0	0.018709499	3.63464E-07	1.00711E-06	1.37057E-06	1.3705706
3975253768239	397525	3768239	0	0	0	0	0	0	0.0180684	0.016363834	0	0.012613789	2.45045E-07	6.78983E-07	9.24027E-07	0.9240273
3964253768289	396425	3768289	0	0	0	0	0	0	0.000447683	0.000405449	0	0.000312534	6.07151E-09	1.68232E-08	2.28948E-08	0.0228948
3964753768289	396475	3768289	0	0	0	0	0	0	0.000491156	0.000444821	0	0.000342883	6.66109E-09	1.84569E-08	2.5118E-08	0.025118
3973253768289	397325	3768289	0	0	0	0	0	0	0.019454789	0.017619431	0	0.013581645	2.63847E-07	7.31081E-07	9.94928E-07	0.994928
3973753768289	397375	3768289	0	0	0	0	0	0	0.024251624	0.021963735	0	0.016930379	3.28902E-07	9.11339E-07	1.24024E-06	1.2402406
3974253768289	397425	3768289	0	0	0	0	0	0	0.024705384	0.022374688	0	0.017247155	3.35056E-07	9.2839E-07	1.26345E-06	1.2634462
3974753768289	397475	3768289	0	0	0	0	0	0	0.020827889	0.018862994	0	0.014540224	2.82469E-07	7.8268E-07	1.06515E-06	1.065149
3975253768289	397525	3768289	0	0	0	0	0	0	0.01552721	0.014062379	0	0.01083975	2.10581E-07	5.83489E-07	7.9407E-07	0.7940696
3964253768339	396425	3768339	0	0	0	0	0	0	0.000439069	0.000397647	0	0.00030652	5.95468E-09	1.64995E-08	2.24542E-08	0.0224542
3964753768339	396475	3768339	0	0	0	0	0	0	0.000480605	0.000435265	0	0.000335517	6.51799E-09	1.80604E-08	2.45784E-08	0.0245784
3965253768339	396525	3768339	0	0	0	0	0	0	0.000531023	0.000480926	0	0.000370714	7.20176E-09	1.9955E-08	2.71568E-08	0.0271568
3972753768339	397275	3768339	0	0	0	0	0	0	0.009616375	0.00870917	0	0.006713318	1.30418E-07	3.61369E-07	4.91786E-07	0.4917864
3973253768339	397325	3768339	0	0	0	0	0	0	0.012582878	0.011395814	0	0.008784273	1.7065E-07	4.72845E-07	6.43495E-07	0.6434949
3973753768339	397375	3768339	0	0	0	0	0	0	0.015032448	0.013614292	0	0.01049435	2.03871E-07	5.64896E-07	7.68767E-07	0.7687672
3974253768339	397425	3768339	0	0	0	0	0	0	0.015734958	0.014250528	0	0.010984782	2.13398E-07	5.91296E-07	8.04694E-07	0.8046939
3974753768339	397475	3768339	0	0	0	0	0	0	0.014447802	0.013084801	0	0.010086201	1.95942E-07	5.42926E-07	7.38868E-07	0.7388681
3975253768339	397525	3768339	0	0	0	0	0	0	0.012039501	0.010903699	0	0.008404935	1.6328E-07	4.52426E-07	6.15706E-07	0.6157063
3964253768389	396425	3768389	0	0	0	0	0	0	0.000428585	0.000388152	0	0.000299201	5.81249E-09	1.61055E-08	2.1918E-08	0.021918
3964753768389	396475	3768389	0	0	0	0	0	0	0.000468385	0.000424197	0	0.000326985	6.35226E-09	1.76012E-08	2.39534E-08	0.0239534
3965253768389	396525	3768389	0	0	0	0	0	0	0.000515797	0.000467137	0	0.000360085	6.99527E-09	1.93829E-08	2.63781E-08	0.0263781
3972253768389	397225	3768389	0	0	0	0	0	0	0.00550629	0.004986829	0	0.003844014	7.46766E-08	2.06918E-07	2.81595E-07	0.2815945
3972753768389	397275	3768389	0	0	0	0	0	0	0.007051813	0.006386547	0	0.004922963	9.56371E-08	2.64996E-07	3.60633E-07	0.3606333
3973253768389	397325	3768389	0	0	0	0	0	0	0.008757804	0.007931596	0	0.006113938	1.18774E-07	3.29105E-07	4.47879E-07	0.4478786
3973753768389	397375	3768389	0	0	0	0	0	0	0.010179452	0.009219126	0	0.00710641	1.38054E-07	3.82528E-07	5.20582E-07	0.5205824
3974253768389	397425	3768389	0	0	0	0	0	0	0.010755283	0.009740634	0	0.007508405	1.45864E-07	4.04167E-07	5.50031E-07	0.5500307
3974753768389	397475	3768389	0	0	0	0	0	0	0.010323693	0.00934976	0	0.007207107	1.40011E-07	3.87949E-07	5.27959E-07	0.527959
3975253768389	397525	3768389	0	0	0	0	0	0	0.009142915	0.008280376	0	0.00638279	1.23997E-07	3.43577E-07	4.67573E-07	0.4675734
3964253768439	396425	3768439	0	0	0	0	0	0	0.0004179	0.000378475	0	0.000291742	5.66758E-09	1.5704E-08	2.13716E-08	0.0213716
3964753768439	396475	3768439	0	0	0	0	0	0	0.000455162	0.000412223	0	0.000317755	6.17294E-09	1.71043E-08	2.32772E-08	0.0232772
3965253768439	396525	3768439	0	0	0	0	0	0	0.000499303	0.000452199	0	0.00034857	6.77158E-09	1.8763E-08	2.55346E-08	0.0255346
3971753768439	397175	3768439	0	0	0	0	0	0	0.003471549	0.003144044	0	0.002423534	4.70813E-08	1.30455E-07	1.77537E-07	0.1775368
3972253768439	397225	3768439	0	0	0	0	0	0	0.004363843	0.00395216	0	0.003046457	5.91827E-08	1.63987E-07	2.23169E-07	0.2231692
3972753768439	397275	3768439	0	0	0	0	0	0	0.00536866	0.004862182	0	0.003747932	7.28101E-08	2.01746E-07	2.74556E-07	0.274556
3973253768439	397325	3768439	0	0	0	0	0	0	0.006418752	0.005813209	0	0.004481016	8.70515E-08	2.41207E-07	3.28258E-07	0.3282583
3973753768439	397375	3768439	0	0	0	0	0	0	0.007325738	0.006634631	0	0.005114194	9.93521E-08	2.7529E-07	3.74642E-07	0.374642
3974253768439	397425	3768439	0	0	0	0	0	0	0.00780828	0.00707165	0	0.005451063	1.05896E-07	2.93423E-07	3.99319E-07	0.3993195
3974753768439	397475	3768439	0	0	0	0	0	0	0.007673454	0.006949543	0	0.005356939	1.04068E-07	2.88357E-07	3.92424E-07	0.3924244
3975253768439	397525	3768439	0	0	0	0	0	0	0.007075853	0.00640832	0	0.004939746	9.59631E-08	2.659E-07	3.61863E-07	0.3618628
3964253768489	396425	3768489	0	0	0	0	0	0	0.00040568	0.000367408	0	0.00028321	5.50185E-09	1.52448E-08	2.07467E-08	0.0207467
3964753768489	396475	3768489	0	0	0	0	0	0	0.000440672	0.000399099	0	0.000307639	5.97641E-09	1.65598E-08	2.25362E-08	0.0225362
3965253768489	396525	3768489	0	0	0	0	0	0	0.000481941	0.000436475	0	0.000336449	6.53611E-09	1.81106E-08	2.46467E-08	0.0246467
3970753768489	397075	3768489	0	0	0	0	0	0	0.001970501	0.001784604	0	0.001375633	2.6724E-08	7.40484E-08	1.00772E-07	0.1007724
3971253768489	397125	3768489	0	0	0	0	0	0	0.00236229	0.002139433	0	0.001649146	3.20375E-08	8.87712E-08	1.20809E-07	0.1208088
3971753768489	397175	3768489	0	0	0	0	0	0	0.00287348	0.002602397	0	0.002006014	3.89703E-08	1.07981E-07	1.46951E-07	0.1469513
3972253768489	397225	3768489	0	0	0	0	0	0	0.003511015	0.003179787	0	0.002451086	4.76166E-08	1.31939E-07	1.79555E-07	0.1795551
3972753768489	397275	3768489	0	0	0	0	0	0	0.004208583	0.003811547	0	0.002938067	5.7077E-08	1.58152E-07	2.15229E-07	0.2152291
3973253768489	397325	3768489	0	0	0	0	0	0	0.004867954	0.004408713	0	0.003398383	6.60195E-08	1.8293E-07	2.4895E-07	0.2489497
3973753768489	397375	3768489	0	0	0	0	0	0	0.005485389	0.004967899	0	0.003829422	7.43932E-08	2.06132E-07	2.80526E-07	0.2805256
3974253768489	397425	3768489	0	0	0	0	0	0	0.005762453	0.005218825	0	0.004022844	7.81507E-08	2.16544E-07	2.94695E-07	0.2946948
3974753768489	397475	3768489	0	0	0	0	0	0	0.005693203	0.005156109	0	0.0039745	7.72115E-08	2.13942E-07	2.91153E-07	0.2911534

-Unitigated Administrative Building and Water Quality Laboratory Rehabilitatio			Demolition - 2025	Demolition - 2026	ite Preparation - 202	te Preparation - 202	Grading - 2025	Grading - 2026	nfrastructure - 202	nfrastructure - 202	Paving - 2025	itectural Coating -	Child Risk			
Unique Identifier	X (UTM)	Y (UTM)	1900	1900	1900	1900	1900	1900	2025	2026	1900	2026	3rd Trimester	0<2	Total	per million
3975253768489	397525	3768489	0	0	0	0	0	0	0.005472968	0.00495665	0	0.003820751	7.42247E-08	2.05666E-07	2.7989E-07	0.2798904
3964253768539	396425	3768539	0	0	0	0	0	0	0.000392925	0.000355856	0	0.000274306	5.32887E-09	1.47655E-08	2.00944E-08	0.0200944
3964753768539	396475	3768539	0	0	0	0	0	0	0.000425847	0.000385672	0	0.000297289	5.77536E-09	1.60027E-08	2.1778E-08	0.021778
3965253768539	396525	3768539	0	0	0	0	0	0	0.000463844	0.000420085	0	0.000323815	6.29067E-09	1.74305E-08	2.37212E-08	0.0237212
3965753768539	396575	3768539	0	0	0	0	0	0	0.000502241	0.00045486	0	0.000350621	6.81143E-09	1.88735E-08	2.56849E-08	0.0256849
3970253768539	397025	3768539	0	0	0	0	0	0	0.001481682	0.001341901	0	0.001034382	2.00947E-08	5.56793E-08	7.5774E-08	0.075774
3970753768539	397075	3768539	0	0	0	0	0	0	0.001734505	0.001570873	0	0.001210881	2.35235E-08	6.518E-08	8.87035E-08	0.0887035
3971253768539	397125	3768539	0	0	0	0	0	0	0.002040218	0.001847744	0	0.001424303	2.76695E-08	7.66682E-08	1.04338E-07	0.1043378
3971753768539	397175	3768539	0	0	0	0	0	0	0.002424662	0.00219592	0	0.001692688	3.28834E-08	9.11151E-08	1.23998E-07	0.1239984
3972253768539	397225	3768539	0	0	0	0	0	0	0.002872412	0.002601429	0	0.002005268	3.89558E-08	1.07941E-07	1.46897E-07	0.1468966
3972753768539	397275	3768539	0	0	0	0	0	0	0.003380529	0.003061612	0	0.002359992	4.58469E-08	1.27035E-07	1.72882E-07	0.172882
3973253768539	397325	3768539	0	0	0	0	0	0	0.003844373	0.003481696	0	0.002683808	5.21376E-08	1.44466E-07	1.96603E-07	0.1966032
3973753768539	397375	3768539	0	0	0	0	0	0	0.004271088	0.003868155	0	0.002981703	5.79247E-08	1.60501E-07	2.18426E-07	0.2184256
3974253768539	397425	3768539	0	0	0	0	0	0	0.004429153	0.004011308	0	0.00309205	6.00684E-08	1.66441E-07	2.26509E-07	0.2265092
3974753768539	397475	3768539	0	0	0	0	0	0	0.004450789	0.004030903	0	0.003107154	6.03619E-08	1.67254E-07	2.27616E-07	0.2276157
3975253768539	397525	3768539	0	0	0	0	0	0	0.004309018	0.003902507	0	0.003008182	5.84391E-08	1.61926E-07	2.20365E-07	0.2203654
3964253768589	396425	3768589	0	0	0	0	0	0	0.000376764	0.000341221	0	0.000263024	5.1097E-09	1.41582E-08	1.92679E-08	0.0192679
3964753768589	396475	3768589	0	0	0	0	0	0	0.000410554	0.000371823	0	0.000286613	5.56796E-09	1.5428E-08	2.0996E-08	0.020996
3965253768589	396525	3768589	0	0	0	0	0	0	0.000443409	0.000401578	0	0.00030955	6.01354E-09	1.66626E-08	2.26762E-08	0.0226762
3965753768589	396575	3768589	0	0	0	0	0	0	0.000464578	0.00042075	0	0.000324328	6.30064E-09	1.74581E-08	2.37588E-08	0.0237588
3966253768589	396625	3768589	0	0	0	0	0	0	0.00050351	0.000456009	0	0.000351507	6.82863E-09	1.89211E-08	2.57498E-08	0.0257498
3968253768589	396825	3768589	0	0	0	0	0	0	0.00080368	0.000727861	0	0.000561059	1.08995E-08	3.0201E-08	4.11006E-08	0.0411006
3968753768589	396875	3768589	0	0	0	0	0	0	0.000904916	0.000819546	0	0.000631734	1.22725E-08	3.40053E-08	4.62779E-08	0.0462779
3969253768589	396925	3768589	0	0	0	0	0	0	0.001020576	0.000924295	0	0.000712478	1.38411E-08	3.83517E-08	5.21928E-08	0.0521928
3969753768589	396975	3768589	0	0	0	0	0	0	0.001167489	0.001057349	0	0.000815039	1.58336E-08	4.38724E-08	5.9706E-08	0.059706
3970253768589	397025	3768589	0	0	0	0	0	0	0.001339577	0.001213202	0	0.000935177	1.81674E-08	5.03393E-08	6.85067E-08	0.0685067
3970753768589	397075	3768589	0	0	0	0	0	0	0.00153604	0.00139113	0	0.00107233	2.08319E-08	5.7722E-08	7.85539E-08	0.0785539
3971253768589	397125	3768589	0	0	0	0	0	0	0.001785791	0.001617321	0	0.001246685	2.4219E-08	6.71073E-08	9.13263E-08	0.0913263
3971753768589	397175	3768589	0	0	0	0	0	0	0.002073807	0.001878165	0	0.001447752	2.81251E-08	7.79305E-08	1.06056E-07	0.1060556
3972253768589	397225	3768589	0	0	0	0	0	0	0.002396147	0.002170096	0	0.001672782	3.24967E-08	9.00435E-08	1.2254E-07	0.1225402
3972753768589	397275	3768589	0	0	0	0	0	0	0.002749873	0.002490451	0	0.001919723	3.72939E-08	1.03336E-07	1.4063E-07	0.1406299
3973253768589	397325	3768589	0	0	0	0	0	0	0.003115953	0.002821995	0	0.002175288	4.22587E-08	1.17093E-07	1.59351E-07	0.1593514
3973753768589	397375	3768589	0	0	0	0	0	0	0.003416189	0.003093907	0	0.002384887	4.63306E-08	1.28375E-07	1.74706E-07	0.1747057
3974253768589	397425	3768589	0	0	0	0	0	0	0.00350614	0.003175372	0	0.002447683	4.75505E-08	1.31755E-07	1.79306E-07	0.1793058
3974753768589	397475	3768589	0	0	0	0	0	0	0.00354614	0.003211599	0	0.002475607	4.8093E-08	1.33258E-07	1.81351E-07	0.1813514
3975253768589	397525	3768589	0	0	0	0	0	0	0.003489045	0.003159889	0	0.002435748	4.73186E-08	1.31113E-07	1.78432E-07	0.1784315
3964253768639	396425	3768639	0	0	0	0	0	0	0.000346848	0.000314126	0	0.000242139	4.70397E-09	1.3034E-08	1.7738E-08	0.017738
3964753768639	396475	3768639	0	0	0	0	0	0	0.000394928	0.000357671	0	0.000275705	5.35604E-09	1.48408E-08	2.01968E-08	0.0201968
3965253768639	396525	3768639	0	0	0	0	0	0	0.000408217	0.000369706	0	0.000284982	5.53626E-09	1.53402E-08	2.08764E-08	0.0208764
3965753768639	396575	3768639	0	0	0	0	0	0	0.000456965	0.000413856	0	0.000319014	6.19739E-09	1.71721E-08	2.33695E-08	0.0233695
3966253768639	396625	3768639	0	0	0	0	0	0	0.000500171	0.000452985	0	0.000349176	6.78335E-09	1.87957E-08	2.5579E-08	0.025579
3966753768639	396675	3768639	0	0	0	0	0	0	0.000551123	0.00049913	0	0.000384746	7.47436E-09	2.07104E-08	2.81847E-08	0.0281847
3967253768639	396725	3768639	0	0	0	0	0	0	0.000609154	0.000551686	0	0.000425258	8.26138E-09	2.28911E-08	3.11524E-08	0.0311524
3967753768639	396775	3768639	0	0	0	0	0	0	0.000673528	0.000609988	0	0.000470199	9.13443E-09	2.53102E-08	3.44446E-08	0.0344446
3968253768639	396825	3768639	0	0	0	0	0	0	0.000748921	0.000678268	0	0.000522832	1.01569E-08	2.81433E-08	3.83002E-08	0.0383002
3968753768639	396875	3768639	0	0	0	0	0	0	0.000836268	0.000757374	0	0.000583809	1.13415E-08	3.14256E-08	4.27672E-08	0.0427672
3969253768639	396925	3768639	0	0	0	0	0	0	0.000937971	0.000849483	0	0.00065481	1.27208E-08	3.52475E-08	4.79683E-08	0.0479683
3969753768639	396975	3768639	0	0	0	0	0	0	0.00106091	0.000960825	0	0.000740636	1.43881E-08	3.98674E-08	5.42555E-08	0.0542555
3970253768639	397025	3768639	0	0	0	0	0	0	0.001202548	0.0010891	0	0.000839514	1.6309E-08	4.51899E-08	6.14989E-08	0.0614989
3970753768639	397075	3768639	0	0	0	0	0	0	0.001360546	0.001232192	0	0.000949815	1.84518E-08	5.11272E-08	6.9579E-08	0.069579
3971253768639	397125	3768639	0	0	0	0	0	0	0.001532233	0.001387683	0	0.001069672	2.07802E-08	5.7579E-08	7.83592E-08	0.0783592
3971753768639	397175	3768639	0	0	0	0	0	0	0.001775841	0.001608309	0	0.001239738	2.40841E-08	6.67334E-08	9.08174E-08	0.0908174
3972253768639	397225	3768639	0	0	0	0	0	0	0.002026261	0.001835104	0	0.001414559	2.74803E-08	7.61438E-08	1.03624E-07	0.103624
3972753768639	397275	3768639	0	0	0	0	0	0	0.002297983	0.002081192	0	0.001604252	3.11654E-08	8.63547E-08	1.1752E-07	0.11752
3973253768639	397325	3768639	0	0	0	0	0	0	0.002567968	0.002325707	0	0.001792733	3.48269E-08	9.65003E-08	1.31327E-07	0.1313272
3973753768639	397375	3768639	0	0	0	0	0	0	0.002793746	0.002530185	0	0.001950351	3.78889E-08	1.04985E-07	1.42874E-07	0.1428736
3974253768639	397425	3768639	0	0	0	0	0	0	0.002955952	0.002677088	0	0.002063589	4.00888E-08	1.1108E-07	1.51169E-07	0.1511689
3974753768639	397475	3768639	0	0	0	0	0	0	0.002894248	0.002621206	0	0.002020513	3.9252E-08	1.08761E-07	1.48013E-07	0.1480134
3975253768639	397525	3768639	0	0	0	0	0	0	0.002883697	0.00261165	0	0.002013147	3.91089E-08	1.08365E-07	1.47474E-07	0.1474738
3964253768689	396425	3768689	0	0	0	0	0	0	0.000327148	0.000296285	0	0.000228386	4.4368E-09	1.22937E-08	1.67305E-08	0.0167305
3964753768689	396475	3768689	0	0	0	0	0	0	0.000379502	0.0003437	0	0.000264936	5.14683E-09	1.42611E-08	1.94079E-08	0.0194079
3965253768689	396525	3768689	0	0	0	0	0	0	0.000409018	0.000370432	0	0.000285541	5.54713E-09	1.53703E-08	2.09174E-08	0.0209174
3965753768689	396575	3768689	0	0	0	0	0	0	0.000442742	0.000400974	0	0.000309084	6.00449E-09	1.66375E-08	2.2642E-08	0.022642
3966253768689	396625	3768689	0	0	0	0	0	0	0.000480472	0.000435144	0	0.000335424	6.51618E-09	1.80554E-08	2.45716E-08	0.0245716
3966753768689	396675	3768689	0	0	0	0	0	0	0.000523811	0.000474395	0	0.000365679	7.10395E-09	1.9684E-08	2.6788E-08	0.026788
3967253768689	396725	3768689	0	0	0	0	0	0	0.000572759	0.000518726	0	0.000399851	7.7678E-09	2.15234E-08	2.92912E-08	0.0292912
3967753768689	396775	3768689	0	0	0	0	0	0	0.000629321	0.000569951	0	0.000439337	8.53488E-09	2.36489E-08	3.21838E-08	0.0321838
3968253768689	396825	3768689	0	0	0	0	0	0	0.000694831	0.000629281	0	0.00048507	9.42333E-09	2.61107E-08	3.5534E-08	0.035534
3968753768689	396875	3768689	0	0	0	0	0	0	0.000771626	0.000698831	0	0.000538682	1.04648E-08	2.89965E-08	3.94613E-08	0.0394613

-Unitigated Administrative Building and Water Quality Laboratory Rehabilitatio			Demolition - 2025	Demolition - 2026	ite Preparation - 202	te Preparation - 202	Grading - 2025	Grading - 2026	nfrastructure - 202	nfrastructure - 202	Paving - 2025	itectural Coating -	Child Risk			
Unique Identifier	X (UTM)	Y (UTM)	1900	1900	1900	1900	1900	1900	2025	2026	1900	2026	3rd Trimester	0<2	Total	per million
3969253768689	396925	3768689	0	0	0	0	0	0	0.000859239	0.000778179	0	0.000599846	1.16531E-08	3.22889E-08	4.39419E-08	0.0439419
3969753768689	396975	3768689	0	0	0	0	0	0	0.000960876	0.000870228	0	0.0006708	1.30315E-08	3.61083E-08	4.91397E-08	0.0491397
3970253768689	397025	3768689	0	0	0	0	0	0	0.001078941	0.000977154	0	0.000753223	1.46327E-08	4.05449E-08	5.51776E-08	0.0551776
3970753768689	397075	3768689	0	0	0	0	0	0	0.001216237	0.001101498	0	0.000849071	1.64947E-08	4.57043E-08	6.2199E-08	0.062199
3971253768689	397125	3768689	0	0	0	0	0	0	0.001349193	0.001221911	0	0.00094189	1.82978E-08	5.07006E-08	6.89984E-08	0.0689984
3971753768689	397175	3768689	0	0	0	0	0	0	0.001537442	0.0013924	0	0.001073309	2.08509E-08	5.77747E-08	7.86256E-08	0.0786256
3972253768689	397225	3768689	0	0	0	0	0	0	0.001739113	0.001575046	0	0.001214098	2.3586E-08	6.53532E-08	8.89392E-08	0.0889392
3972753768689	397275	3768689	0	0	0	0	0	0	0.001943522	0.001760171	0	0.001356799	2.63582E-08	7.30346E-08	9.93927E-08	0.0993927
3973253768689	397325	3768689	0	0	0	0	0	0	0.002147063	0.00194451	0	0.001498893	2.91186E-08	8.06833E-08	1.09802E-07	0.1098019
3973753768689	397375	3768689	0	0	0	0	0	0	0.002324627	0.002105323	0	0.001622853	3.15267E-08	8.73559E-08	1.18883E-07	0.1188826
3974253768689	397425	3768689	0	0	0	0	0	0	0.002455647	0.002223982	0	0.001714319	3.33036E-08	9.22794E-08	1.25583E-07	0.1255831
3974753768689	397475	3768689	0	0	0	0	0	0	0.002526432	0.002288089	0	0.001763736	3.42636E-08	9.49394E-08	1.29203E-07	0.129203
3975253768689	397525	3768689	0	0	0	0	0	0	0.002529437	0.002290811	0	0.001765833	3.43044E-08	9.50524E-08	1.29357E-07	0.1293567

Garvey Reservoir Rehab -Unmitigated Administration Building and Water Quality Laboratory

Offroad DPM Emissions, Ground Level Concentrations and Health Risk Calculations

Residential Receptors

Phase	Year	Emissions (lbs/day)	Meters	lbs/meter	meters (h1)	lbs/day (H1)	g/s (H1)	meters (h2)	lbs/day (H2)	g/s (H2)	hrs/day
Demolition - 2025	1900		1932.1	0	691.2	0	0	1240.9	0	0	10.00
Demolition - 2026	1900		1932.1	0	691.2	0	0	1240.9	0	0	10.00
Site Preparation - 2025	1900		1932.1	0	691.2	0	0	1240.9	0	0	10.00
Site Preparation - 2026	1900		1932.1	0	691.2	0	0	1240.9	0	0	10.00
Grading - 2025	1900		1932.1	0	691.2	0	0	1240.9	0	0	10.00
Grading - 2026	1900		1932.1	0	691.2	0	0	1240.9	0	0	10.00
Infrastructure - 2025	2025	0.0100	1932.1	5.17572E-06	691.2	0.003577455	4.50749E-05	1240.9	0.006422545	8.09223E-05	10.00
Infrastructure - 2026	2026	0.0100	1932.1	5.17572E-06	691.2	0.003577455	4.50749E-05	1240.9	0.006422545	8.09223E-05	10.00
Paving - 2025	1900	0.0000	1932.1	0	691.2	0	0	1240.9	0	0	10.00
Architectural Coating - 2026	2026		1932.1	0	691.2	0	0	1240.9	0	0	10.00

		AERMOD Column Identifier:	*5*	*5*	*5*	*5*	*5*	*5*	*5*	*5*	*5*	*5*				
			6	*6*	*6*	*6*	*6*	*6*	*6*	*6*	*6*	*6*			*MAX:*	0.056265
-Unitigated Administrative Building and Water Quality Laboratory Rehabilitatio			Demolition - 2025	Demolition - 2026	Site Preparation - 2025	te Preparation - 202	Grading - 2025	Grading - 2026	Infrastructure - 2025	nfrastructure - 2026	Paving - 2025	rchitectural Coating - 202	Child Risk			
Unique Identifier	X (UTM)	Y (UTM)	1900	1900	1900	1900	1900	1900	2025	2026	1900	2026	3rd Trimester	0<2	Total	per million
396166.283767377.2	396166.28	3767377	0	0	0	0	0	0	3.83011E-06	3.83011E-06	0	0	5.19442E-11	1.58563E-10	2.10508E-10	0.0002105
396266.283767377.2	396266.28	3767377	0	0	0	0	0	0	3.91694E-06	3.91694E-06	0	0	5.31218E-11	1.62158E-10	2.1528E-10	0.0002153
396366.283767377.2	396366.28	3767377	0	0	0	0	0	0	4.07625E-06	4.07625E-06	0	0	5.52823E-11	1.68753E-10	2.24036E-10	0.000224
396466.283767377.2	396466.28	3767377	0	0	0	0	0	0	4.18245E-06	4.18245E-06	0	0	5.67227E-11	1.7315E-10	2.29873E-10	0.0002299
396566.283767377.2	396566.28	3767377	0	0	0	0	0	0	4.58512E-06	4.58512E-06	0	0	6.21836E-11	1.8982E-10	2.52003E-10	0.000252
396666.283767377.2	396666.28	3767377	0	0	0	0	0	0	4.33497E-06	4.33497E-06	0	0	5.87912E-11	1.79464E-10	2.38255E-10	0.0002383
396766.283767377.2	396766.28	3767377	0	0	0	0	0	0	4.31797E-06	4.31797E-06	0	0	5.85606E-11	1.7876E-10	2.37321E-10	0.0002373
396866.283767377.2	396866.28	3767377	0	0	0	0	0	0	4.32176E-06	4.32176E-06	0	0	5.86119E-11	1.78917E-10	2.37529E-10	0.0002375
396966.283767377.2	396966.28	3767377	0	0	0	0	0	0	4.37894E-06	4.37894E-06	0	0	5.93874E-11	1.81284E-10	2.40672E-10	0.0002407
397066.283767377.2	397066.28	3767377	0	0	0	0	0	0	4.26851E-06	4.26851E-06	0	0	5.78898E-11	1.76713E-10	2.34602E-10	0.0002346
397166.283767377.2	397166.28	3767377	0	0	0	0	0	0	4.21012E-06	4.21012E-06	0	0	5.70979E-11	1.74295E-10	2.31393E-10	0.0002314
397266.283767377.2	397266.28	3767377	0	0	0	0	0	0	4.2152E-06	4.2152E-06	0	0	5.71668E-11	1.74506E-10	2.31672E-10	0.0002317
397366.283767377.2	397366.28	3767377	0	0	0	0	0	0	4.02305E-06	4.02305E-06	0	0	5.45609E-11	1.66551E-10	2.21112E-10	0.0002211
397466.283767377.2	397466.28	3767377	0	0	0	0	0	0	3.62179E-06	3.62179E-06	0	0	4.91189E-11	1.49939E-10	1.99058E-10	0.0001991
397566.283767377.2	397566.28	3767377	0	0	0	0	0	0	3.56251E-06	3.56251E-06	0	0	4.83149E-11	1.47485E-10	1.958E-10	0.0001958
397666.283767377.2	397666.28	3767377	0	0	0	0	0	0	3.45794E-06	3.45794E-06	0	0	4.68967E-11	1.43156E-10	1.90052E-10	0.0001901
397766.283767377.2	397766.28	3767377	0	0	0	0	0	0	3.56871E-06	3.56871E-06	0	0	4.83991E-11	1.47742E-10	1.96141E-10	0.0001961
397866.283767377.2	397866.28	3767377	0	0	0	0	0	0	3.39922E-06	3.39922E-06	0	0	4.61004E-11	1.40725E-10	1.86825E-10	0.0001868
396166.283767477.2	396166.28	3767477	0	0	0	0	0	0	4.40759E-06	4.40759E-06	0	0	5.9776E-11	1.82471E-10	2.42247E-10	0.0002422
396266.283767477.2	396266.28	3767477	0	0	0	0	0	0	4.30668E-06	4.30668E-06	0	0	5.84075E-11	1.78293E-10	2.367E-10	0.0002367
396366.283767477.2	396366.28	3767477	0	0	0	0	0	0	4.53722E-06	4.53722E-06	0	0	6.1534E-11	1.87837E-10	2.49371E-10	0.0002494
396466.283767477.2	396466.28	3767477	0	0	0	0	0	0	4.96939E-06	4.96939E-06	0	0	6.73951E-11	2.05728E-10	2.73124E-10	0.0002731
396566.283767477.2	396566.28	3767477	0	0	0	0	0	0	5.03692E-06	5.03692E-06	0	0	6.83109E-11	2.08524E-10	2.76835E-10	0.0002768
396666.283767477.2	396666.28	3767477	0	0	0	0	0	0	4.89066E-06	4.89066E-06	0	0	6.63274E-11	2.02469E-10	2.68796E-10	0.0002688
396766.283767477.2	396766.28	3767477	0	0	0	0	0	0	4.92892E-06	4.92892E-06	0	0	6.68462E-11	2.04053E-10	2.70899E-10	0.0002709
396866.283767477.2	396866.28	3767477	0	0	0	0	0	0	4.9577E-06	4.9577E-06	0	0	6.72366E-11	2.05244E-10	2.72481E-10	0.0002725
396966.283767477.2	396966.28	3767477	0	0	0	0	0	0	5.0315E-06	5.0315E-06	0	0	6.82375E-11	2.083E-10	2.76537E-10	0.0002765
397066.283767477.2	397066.28	3767477	0	0	0	0	0	0	4.93481E-06	4.93481E-06	0	0	6.69261E-11	2.04297E-10	2.71223E-10	0.0002712
397166.283767477.2	397166.28	3767477	0	0	0	0	0	0	4.77938E-06	4.77938E-06	0	0	6.48183E-11	1.97862E-10	2.62681E-10	0.0002627
397266.283767477.2	397266.28	3767477	0	0	0	0	0	0	4.79518E-06	4.79518E-06	0	0	6.50325E-11	1.98516E-10	2.63549E-10	0.0002635
397366.283767477.2	397366.28	3767477	0	0	0	0	0	0	4.65093E-06	4.65093E-06	0	0	6.30761E-11	1.92544E-10	2.5562E-10	0.0002556
397466.283767477.2	397466.28	3767477	0	0	0	0	0	0	4.19494E-06	4.19494E-06	0	0	5.6892E-11	1.73667E-10	2.30559E-10	0.0002306
397566.283767477.2	397566.28	3767477	0	0	0	0	0	0	3.9783E-06	3.9783E-06	0	0	5.3954E-11	1.64698E-10	2.18652E-10	0.0002187
397666.283767477.2	397666.28	3767477	0	0	0	0	0	0	3.89105E-06	3.89105E-06	0	0	5.27707E-11	1.61086E-10	2.13857E-10	0.0002139
397766.283767477.2	397766.28	3767477	0	0	0	0	0	0	3.79864E-06	3.79864E-06	0	0	5.15174E-11	1.5726E-10	2.08778E-10	0.0002088
397866.283767477.2	397866.28	3767477	0	0	0	0	0	0	3.65582E-06	3.65582E-06	0	0	4.95804E-11	1.51348E-10	2.00928E-10	0.0002009
396166.283767577.2	396166.28	3767577	0	0	0	0	0	0	4.64617E-06	4.64617E-06	0	0	6.30116E-11	1.92347E-10	2.55359E-10	0.0002554
396266.283767577.2	396266.28	3767577	0	0	0	0	0	0	4.77621E-06	4.77621E-06	0	0	6.47752E-11	1.97731E-10	2.62506E-10	0.0002625
396366.283767577.2	396366.28	3767577	0	0	0	0	0	0	4.99528E-06	4.99528E-06	0	0	6.77463E-11	2.068E-10	2.74547E-10	0.0002745
396466.283767577.2	396466.28	3767577	0	0	0	0	0	0	5.30423E-06	5.30423E-06	0	0	7.19363E-11	2.19591E-10	2.91527E-10	0.0002915
396566.283767577.2	396566.28	3767577	0	0	0	0	0	0	5.89209E-06	5.89209E-06	0	0	7.99089E-11	2.43928E-10	3.23836E-10	0.0003238
396666.283767577.2	396666.28	3767577	0	0	0	0	0	0	5.9828E-06	5.9828E-06	0	0	8.1139E-11	2.47683E-10	3.28822E-10	0.0003288
396766.283767577.2	396766.28	3767577	0	0	0	0	0	0	5.64161E-06	5.64161E-06	0	0	7.65119E-11	2.33558E-10	3.1007E-10	0.0003101
396866.283767577.2	396866.28	3767577	0	0	0	0	0	0	5.78386E-06	5.78386E-06	0	0	7.8441E-11	2.39447E-10	3.17888E-10	0.0003179

-Unitigated Administrative Building and Water Quality Laboratory Rehabilitatio			Demolition - 2025	Demolition - 2026	Site Preparation - 2025	te Preparation - 202	Grading - 2025	Grading - 2026	Infrastructure - 2025	nfrastructure - 2026	Paving - 2025	rchitectural Coating - 202	Child Risk			
Unique Identifier	X (UTM)	Y (UTM)	1900	1900	1900	1900	1900	1900	2025	2026	1900	2026	3rd Trimester	0<2	Total	per million
396966.283767577.2	396966.28	3767577	0	0	0	0	0	0	5.86296E-06	5.86296E-06	0	0	7.95138E-11	2.42721E-10	3.22235E-10	0.0003222
397066.283767577.2	397066.28	3767577	0	0	0	0	0	0	5.86437E-06	5.86437E-06	0	0	7.95329E-11	2.4278E-10	3.22313E-10	0.0003223
397166.283767577.2	397166.28	3767577	0	0	0	0	0	0	5.64799E-06	5.64799E-06	0	0	7.65984E-11	2.33822E-10	3.1042E-10	0.0003104
397266.283767577.2	397266.28	3767577	0	0	0	0	0	0	5.57311E-06	5.57311E-06	0	0	7.55828E-11	2.30722E-10	3.06305E-10	0.0003063
397366.283767577.2	397366.28	3767577	0	0	0	0	0	0	5.43422E-06	5.43422E-06	0	0	7.36991E-11	2.24972E-10	2.98671E-10	0.0002987
397466.283767577.2	397466.28	3767577	0	0	0	0	0	0	4.84076E-06	4.84076E-06	0	0	6.56506E-11	2.00403E-10	2.66054E-10	0.0002661
397566.283767577.2	397566.28	3767577	0	0	0	0	0	0	4.56601E-06	4.56601E-06	0	0	6.19244E-11	1.89029E-10	2.50953E-10	0.000251
397666.283767577.2	397666.28	3767577	0	0	0	0	0	0	4.31766E-06	4.31766E-06	0	0	5.85564E-11	1.78747E-10	2.37304E-10	0.0002373
397766.283767577.2	397766.28	3767577	0	0	0	0	0	0	4.15353E-06	4.15353E-06	0	0	5.63304E-11	1.71952E-10	2.28283E-10	0.0002283
397866.283767577.2	397866.28	3767577	0	0	0	0	0	0	3.94844E-06	3.94844E-06	0	0	5.3549E-11	1.63462E-10	2.17011E-10	0.000217
396166.283767677.2	396166.28	3767677	0	0	0	0	0	0	5.62549E-06	5.62549E-06	0	0	7.62932E-11	2.3289E-10	3.09183E-10	0.0003092
396266.283767677.2	396266.28	3767677	0	0	0	0	0	0	5.32253E-06	5.32253E-06	0	0	7.21845E-11	2.20348E-10	2.92533E-10	0.0002925
396366.283767677.2	396366.28	3767677	0	0	0	0	0	0	5.67165E-06	5.67165E-06	0	0	7.69192E-11	2.34801E-10	3.1172E-10	0.0003117
396466.283767677.2	396466.28	3767677	0	0	0	0	0	0	6.70851E-06	6.70851E-06	0	0	9.09811E-11	2.77726E-10	3.68708E-10	0.0003687
396566.283767677.2	396566.28	3767677	0	0	0	0	0	0	6.76935E-06	6.76935E-06	0	0	9.18063E-11	2.80245E-10	3.72052E-10	0.0003721
396666.283767677.2	396666.28	3767677	0	0	0	0	0	0	6.34121E-06	6.34121E-06	0	0	8.59999E-11	2.62521E-10	3.48521E-10	0.0003485
396766.283767677.2	396766.28	3767677	0	0	0	0	0	0	6.60139E-06	6.60139E-06	0	0	8.95284E-11	2.73292E-10	3.6282E-10	0.0003628
396866.283767677.2	396866.28	3767677	0	0	0	0	0	0	6.97234E-06	6.97234E-06	0	0	9.45593E-11	2.88649E-10	3.83208E-10	0.0003832
396966.283767677.2	396966.28	3767677	0	0	0	0	0	0	7.04825E-06	7.04825E-06	0	0	9.55887E-11	2.91791E-10	3.8738E-10	0.0003874
397066.283767677.2	397066.28	3767677	0	0	0	0	0	0	7.02703E-06	7.02703E-06	0	0	9.5301E-11	2.90913E-10	3.86214E-10	0.0003862
397166.283767677.2	397166.28	3767677	0	0	0	0	0	0	6.87159E-06	6.87159E-06	0	0	9.31929E-11	2.84478E-10	3.77671E-10	0.0003777
397266.283767677.2	397266.28	3767677	0	0	0	0	0	0	6.30158E-06	6.30158E-06	0	0	8.54624E-11	2.6088E-10	3.46342E-10	0.0003463
397366.283767677.2	397366.28	3767677	0	0	0	0	0	0	6.41003E-06	6.41003E-06	0	0	8.69332E-11	2.6537E-10	3.52303E-10	0.0003523
397466.283767677.2	397466.28	3767677	0	0	0	0	0	0	5.51298E-06	5.51298E-06	0	0	7.47673E-11	2.28232E-10	3.03E-10	0.000303
397566.283767677.2	397566.28	3767677	0	0	0	0	0	0	5.28934E-06	5.28934E-06	0	0	7.17343E-11	2.18974E-10	2.90708E-10	0.0002907
397666.283767677.2	397666.28	3767677	0	0	0	0	0	0	4.98117E-06	4.98117E-06	0	0	6.75549E-11	2.06216E-10	2.73771E-10	0.0002738
397766.283767677.2	397766.28	3767677	0	0	0	0	0	0	4.64986E-06	4.64986E-06	0	0	6.30616E-11	1.925E-10	2.55562E-10	0.0002556
397866.283767677.2	397866.28	3767677	0	0	0	0	0	0	4.42501E-06	4.42501E-06	0	0	6.00123E-11	1.83192E-10	2.43204E-10	0.0002432
396166.283767777.2	396166.28	3767777	0	0	0	0	0	0	6.31355E-06	6.31355E-06	0	0	8.56247E-11	2.61376E-10	3.47E-10	0.000347
396266.283767777.2	396266.28	3767777	0	0	0	0	0	0	7.17219E-06	7.17219E-06	0	0	9.72697E-11	2.96923E-10	3.94192E-10	0.0003942
396366.283767777.2	396366.28	3767777	0	0	0	0	0	0	6.98034E-06	6.98034E-06	0	0	9.46677E-11	2.8898E-10	3.83648E-10	0.0003836
396466.283767777.2	396466.28	3767777	0	0	0	0	0	0	7.36938E-06	7.36938E-06	0	0	9.9944E-11	3.05086E-10	4.0503E-10	0.000405
396566.283767777.2	396566.28	3767777	0	0	0	0	0	0	6.97725E-06	6.97725E-06	0	0	9.46258E-11	2.88852E-10	3.83478E-10	0.0003835
396666.283767777.2	396666.28	3767777	0	0	0	0	0	0	7.33794E-06	7.33794E-06	0	0	9.95176E-11	3.03785E-10	4.03302E-10	0.0004033
396766.283767777.2	396766.28	3767777	0	0	0	0	0	0	8.04307E-06	8.04307E-06	0	0	1.09081E-10	3.32976E-10	4.42057E-10	0.0004421
396866.283767777.2	396866.28	3767777	0	0	0	0	0	0	8.58934E-06	8.58934E-06	0	0	1.16489E-10	3.55591E-10	4.7208E-10	0.0004721
396966.283767777.2	396966.28	3767777	0	0	0	0	0	0	8.48403E-06	8.48403E-06	0	0	1.15061E-10	3.51231E-10	4.66292E-10	0.0004663
397066.283767777.2	397066.28	3767777	0	0	0	0	0	0	8.49567E-06	8.49567E-06	0	0	1.15219E-10	3.51713E-10	4.66932E-10	0.0004669
397166.283767777.2	397166.28	3767777	0	0	0	0	0	0	8.50727E-06	8.50727E-06	0	0	1.15376E-10	3.52194E-10	4.6757E-10	0.0004676
397266.283767777.2	397266.28	3767777	0	0	0	0	0	0	7.91515E-06	7.91515E-06	0	0	1.07346E-10	3.2768E-10	4.35026E-10	0.000435
397366.283767777.2	397366.28	3767777	0	0	0	0	0	0	7.76167E-06	7.76167E-06	0	0	1.05264E-10	3.21326E-10	4.2659E-10	0.0004266
397466.283767777.2	397466.28	3767777	0	0	0	0	0	0	6.69808E-06	6.69808E-06	0	0	9.08398E-11	2.77295E-10	3.68135E-10	0.0003681
397566.283767777.2	397566.28	3767777	0	0	0	0	0	0	6.17864E-06	6.17864E-06	0	0	8.37951E-11	2.55791E-10	3.39586E-10	0.0003396
397666.283767777.2	397666.28	3767777	0	0	0	0	0	0	5.88008E-06	5.88008E-06	0	0	7.9746E-11	2.4343E-10	3.23176E-10	0.0003232
397766.283767777.2	397766.28	3767777	0	0	0	0	0	0	5.25012E-06	5.25012E-06	0	0	7.12025E-11	2.17351E-10	2.88553E-10	0.0002886
397866.283767777.2	397866.28	3767777	0	0	0	0	0	0	4.7865E-06	4.7865E-06	0	0	6.49148E-11	1.98157E-10	2.63072E-10	0.0002631
396166.283767877.2	396166.28	3767877	0	0	0	0	0	0	6.97761E-06	6.97761E-06	0	0	9.46308E-11	2.88867E-10	3.83498E-10	0.0003835
396266.283767877.2	396266.28	3767877	0	0	0	0	0	0	8.05927E-06	8.05927E-06	0	0	1.093E-10	3.33647E-10	4.42947E-10	0.0004429
396366.283767877.2	396366.28	3767877	0	0	0	0	0	0	8.5193E-06	8.5193E-06	0	0	1.15539E-10	3.52692E-10	4.68231E-10	0.0004682
396466.283767877.2	396466.28	3767877	0	0	0	0	0	0	8.08394E-06	8.08394E-06	0	0	1.09635E-10	3.34668E-10	4.44303E-10	0.0004443
396566.283767877.2	396566.28	3767877	0	0	0	0	0	0	8.00101E-06	8.00101E-06	0	0	1.0851E-10	3.31235E-10	4.39745E-10	0.0004397
397466.283767877.2	397466.28	3767877	0	0	0	0	0	0	9.38054E-06	9.38054E-06	0	0	1.27219E-10	3.88346E-10	5.15566E-10	0.0005156
397566.283767877.2	397566.28	3767877	0	0	0	0	0	0	7.38854E-06	7.38854E-06	0	0	1.00204E-10	3.05879E-10	4.06083E-10	0.0004061
397666.283767877.2	397666.28	3767877	0	0	0	0	0	0	6.22835E-06	6.22835E-06	0	0	8.44692E-11	2.57848E-10	3.42318E-10	0.0003423
397766.283767877.2	397766.28	3767877	0	0	0	0	0	0	5.51313E-06	5.51313E-06	0	0	7.47694E-11	2.28239E-10	3.03008E-10	0.000303
397866.283767877.2	397866.28	3767877	0	0	0	0	0	0	5.52227E-06	5.52227E-06	0	0	7.48934E-11	2.28617E-10	3.03511E-10	0.0003035
396166.283767977.2	396166.28	3767977	0	0	0	0	0	0	7.31371E-06	7.31371E-06	0	0	9.91889E-11	3.02781E-10	4.0197E-10	0.000402
396266.283767977.2	396266.28	3767977	0	0	0	0	0	0	8.45174E-06	8.45174E-06	0	0	1.14623E-10	3.49895E-10	4.64518E-10	0.0004645
396366.283767977.2	396366.28	3767977	0	0	0	0	0	0	9.14145E-06	9.14145E-06	0	0	1.23977E-10	3.78448E-10	5.02425E-10	0.0005024
396466.283767977.2	396466.28	3767977	0	0	0	0	0	0	8.78313E-06	8.78313E-06	0	0	1.19117E-10	3.63614E-10	4.82731E-10	0.0004827
397466.283767977.2	397466.28	3767977	0	0	0	0	0	0	1.10631E-05	1.10631E-05	0	0	1.50039E-10	4.58004E-10	6.08043E-10	0.000608
397566.283767977.2	397566.28	3767977	0	0	0	0	0	0	8.93416E-06	8.93416E-06	0	0	1.21166E-10	3.69866E-10	4.91032E-10	0.000491
397666.283767977.2	397666.28	3767977	0	0	0	0	0	0	7.41573E-06	7.41573E-06	0	0	1.00573E-10	3.07005E-10	4.07577E-10	0.0004076
397766.283767977.2	397766.28	3767977	0	0	0	0	0	0	7.47003E-06	7.47003E-06	0	0	1.01309E-10	3.09253E-10	4.10562E-10	0.0004106
397866.283767977.2	397866.28	3767977	0	0	0	0	0	0	6.83119E-06	6.83119E-06	0	0	9.2645E-11	2.82805E-10	3.7545E-10	0.0003755
396166.283768077.2	396166.28	3768077	0	0	0	0	0	0	9.85953E-06	9.85953E-06	0	0	1.33715E-10	4.08176E-10	5.41891E-10	0.0005419
396266.283768077.2	396266.28	3768077	0	0	0	0	0	0	9.34415E-06	9.34415E-06	0	0	1.26726E-10	3.8684E-10	5.13566E-10	0.0005136
396366.283768077.2	396366.28	3768077	0	0	0	0	0	0	1.014E-05	1.014E-05	0	0	1.3752E-10	4.19789E-10	5.57309E-10	0.0005573
396466.283768077.2	396466.28	3768077	0	0	0	0	0	0	1.09769E-05	1.09769E-05	0	0	1.48869E-10	4.54433E-10	6.03302E-10	0.0006033
397466.283768077.2	397466.28	3768077	0	0	0	0	0	0	1.91987E-05	1.91987E-05	0	0	2.60374E-10	7.9481E-10	1.05518E-09	0.0010552
397566.283768077.2	397566.28	3768077	0	0	0	0	0	0	1.51719E-05	1.51719E-05	0	0	2.05763E-10	6.28106E-10	8.33868E-10	0.0008339

-Unitigated Administrative Building and Water Quality Laboratory Rehabilitatio			Demolition - 2025	Demolition - 2026	Site Preparation - 2025	ite Preparation - 202	Grading - 2025	Grading - 2026	Infrastructure - 2025	nfrastructure - 2026	Paving - 2025	rchitectural Coating - 202	Child Risk			
Unique Identifier	X (UTM)	Y (UTM)	1900	1900	1900	1900	1900	1900	2025	2026	1900	2026	3rd Trimester	0<2	Total	per million
397666.283768077.2	397666.28	3768077	0	0	0	0	0	0	1.13827E-05	1.13827E-05	0	0	1.54373E-10	4.71234E-10	6.25607E-10	0.0006256
397766.283768077.2	397766.28	3768077	0	0	0	0	0	0	8.88752E-06	8.88752E-06	0	0	1.20533E-10	3.67936E-10	4.88469E-10	0.0004885
397866.283768077.2	397866.28	3768077	0	0	0	0	0	0	7.70344E-06	7.70344E-06	0	0	1.04474E-10	3.18916E-10	4.2339E-10	0.0004234
396166.283768177.2	396166.28	3768177	0	0	0	0	0	0	1.18911E-05	1.18911E-05	0	0	1.61267E-10	4.9228E-10	6.53547E-10	0.0006535
396266.283768177.2	396266.28	3768177	0	0	0	0	0	0	1.22816E-05	1.22816E-05	0	0	1.66564E-10	5.08449E-10	6.75013E-10	0.000675
396366.283768177.2	396366.28	3768177	0	0	0	0	0	0	1.337E-05	1.337E-05	0	0	1.81325E-10	5.53506E-10	7.34831E-10	0.0007348
396466.283768177.2	396466.28	3768177	0	0	0	0	0	0	1.31649E-05	1.31649E-05	0	0	1.78543E-10	5.45015E-10	7.23557E-10	0.0007236
397466.283768177.2	397466.28	3768177	0	0	0	0	0	0	4.19871E-05	4.19871E-05	0	0	5.69432E-10	1.73823E-09	2.30766E-09	0.0023077
397566.283768177.2	397566.28	3768177	0	0	0	0	0	0	2.20253E-05	2.20253E-05	0	0	2.98708E-10	9.11828E-10	1.21054E-09	0.0012105
397666.283768177.2	397666.28	3768177	0	0	0	0	0	0	1.50304E-05	1.50304E-05	0	0	2.03843E-10	6.22246E-10	8.26089E-10	0.0008261
397766.283768177.2	397766.28	3768177	0	0	0	0	0	0	1.10837E-05	1.10837E-05	0	0	1.50318E-10	4.58858E-10	6.09176E-10	0.0006092
397866.283768177.2	397866.28	3768177	0	0	0	0	0	0	9.09468E-06	9.09468E-06	0	0	1.23343E-10	3.76512E-10	4.99854E-10	0.0004999
396166.283768277.2	396166.28	3768277	0	0	0	0	0	0	1.41424E-05	1.41424E-05	0	0	1.918E-10	5.85482E-10	7.77282E-10	0.0007773
396266.283768277.2	396266.28	3768277	0	0	0	0	0	0	1.39172E-05	1.39172E-05	0	0	1.88746E-10	5.76159E-10	7.64905E-10	0.0007649
396366.283768277.2	396366.28	3768277	0	0	0	0	0	0	1.56228E-05	1.56228E-05	0	0	2.11877E-10	6.4677E-10	8.58647E-10	0.0008586
396466.283768277.2	396466.28	3768277	0	0	0	0	0	0	1.61667E-05	1.61667E-05	0	0	2.19254E-10	6.69288E-10	8.88542E-10	0.0008885
397366.283768277.2	397366.28	3768277	0	0	0	0	0	0	0.000333703	0.000333703	0	0	4.5257E-09	1.3815E-08	1.83407E-08	0.0183407
397466.283768277.2	397466.28	3768277	0	0	0	0	0	0	6.55061E-05	6.55061E-05	0	0	8.88398E-10	2.7119E-09	3.60029E-09	0.0036003
397566.283768277.2	397566.28	3768277	0	0	0	0	0	0	2.99056E-05	2.99056E-05	0	0	4.05581E-10	1.23806E-09	1.64365E-09	0.0016436
397666.283768277.2	397666.28	3768277	0	0	0	0	0	0	1.87384E-05	1.87384E-05	0	0	2.54131E-10	7.75753E-10	1.02988E-09	0.0010299
397766.283768277.2	397766.28	3768277	0	0	0	0	0	0	1.3423E-05	1.3423E-05	0	0	1.82044E-10	5.55701E-10	7.37745E-10	0.0007377
397866.283768277.2	397866.28	3768277	0	0	0	0	0	0	1.03337E-05	1.03337E-05	0	0	1.40146E-10	4.27805E-10	5.67951E-10	0.000568
396166.283768377.2	396166.28	3768377	0	0	0	0	0	0	1.6667E-05	1.6667E-05	0	0	2.26038E-10	6.89998E-10	9.16037E-10	0.000916
396266.283768377.2	396266.28	3768377	0	0	0	0	0	0	1.73546E-05	1.73546E-05	0	0	2.35364E-10	7.18466E-10	9.5383E-10	0.0009538
396366.283768377.2	396366.28	3768377	0	0	0	0	0	0	1.93763E-05	1.93763E-05	0	0	2.62783E-10	8.02163E-10	1.06495E-09	0.0010649
396466.283768377.2	396466.28	3768377	0	0	0	0	0	0	2.09048E-05	2.09048E-05	0	0	2.83512E-10	8.6544E-10	1.14895E-09	0.001149
397266.283768377.2	397266.28	3768377	0	0	0	0	0	0	0.000523875	0.000523875	0	0	7.10482E-09	2.1688E-08	2.87928E-08	0.0287928
397366.283768377.2	397366.28	3768377	0	0	0	0	0	0	0.000235623	0.000235623	0	0	3.19553E-09	9.75458E-09	1.29501E-08	0.0129501
397466.283768377.2	397466.28	3768377	0	0	0	0	0	0	7.603E-05	7.603E-05	0	0	1.03112E-09	3.14758E-09	4.1787E-09	0.0041787
397566.283768377.2	397566.28	3768377	0	0	0	0	0	0	3.65004E-05	3.65004E-05	0	0	4.95021E-10	1.51109E-09	2.00611E-09	0.0020061
397666.283768377.2	397666.28	3768377	0	0	0	0	0	0	2.21244E-05	2.21244E-05	0	0	3.00052E-10	9.15931E-10	1.21598E-09	0.001216
397766.283768377.2	397766.28	3768377	0	0	0	0	0	0	1.55538E-05	1.55538E-05	0	0	2.10942E-10	6.43914E-10	8.54856E-10	0.0008549
397866.283768377.2	397866.28	3768377	0	0	0	0	0	0	1.11884E-05	1.11884E-05	0	0	1.51738E-10	4.63191E-10	6.14929E-10	0.0006149
396166.283768477.2	396166.28	3768477	0	0	0	0	0	0	2.04481E-05	2.04481E-05	0	0	2.77319E-10	8.46535E-10	1.12385E-09	0.0011239
396266.283768477.2	396266.28	3768477	0	0	0	0	0	0	2.20367E-05	2.20367E-05	0	0	2.98864E-10	9.12302E-10	1.21117E-09	0.0012112
396366.283768477.2	396366.28	3768477	0	0	0	0	0	0	2.44257E-05	2.44257E-05	0	0	3.31263E-10	1.0112E-09	1.34247E-09	0.0013425
396466.283768477.2	396466.28	3768477	0	0	0	0	0	0	2.73511E-05	2.73511E-05	0	0	3.70938E-10	1.13231E-09	1.50325E-09	0.0015033
397166.283768477.2	397166.28	3768477	0	0	0	0	0	0	9.73672E-05	9.73672E-05	0	0	1.3205E-09	4.03092E-09	5.35142E-09	0.0053514
397266.283768477.2	397266.28	3768477	0	0	0	0	0	0	0.000531762	0.000531762	0	0	7.21178E-09	2.20145E-08	2.92263E-08	0.0292263
397366.283768477.2	397366.28	3768477	0	0	0	0	0	0	0.000215441	0.000215441	0	0	2.92182E-09	8.91907E-09	1.18409E-08	0.0118409
397466.283768477.2	397466.28	3768477	0	0	0	0	0	0	7.00666E-05	7.00666E-05	0	0	9.50247E-10	2.9007E-09	3.85094E-09	0.0038509
397566.283768477.2	397566.28	3768477	0	0	0	0	0	0	4.18824E-05	4.18824E-05	0	0	5.68011E-10	1.73389E-09	2.30191E-09	0.0023019
397666.283768477.2	397666.28	3768477	0	0	0	0	0	0	2.59892E-05	2.59892E-05	0	0	3.52467E-10	1.07593E-09	1.4284E-09	0.0014284
397766.283768477.2	397766.28	3768477	0	0	0	0	0	0	1.64422E-05	1.64422E-05	0	0	2.22991E-10	6.80694E-10	9.03685E-10	0.0009037
397866.283768477.2	397866.28	3768477	0	0	0	0	0	0	1.28178E-05	1.28178E-05	0	0	1.73836E-10	5.30646E-10	7.04482E-10	0.0007045
396166.283768577.2	396166.28	3768577	0	0	0	0	0	0	2.60193E-05	2.60193E-05	0	0	3.52875E-10	1.07718E-09	1.43005E-09	0.0014301
396266.283768577.2	396266.28	3768577	0	0	0	0	0	0	2.93301E-05	2.93301E-05	0	0	3.97777E-10	1.21424E-09	1.61202E-09	0.001612
396366.283768577.2	396366.28	3768577	0	0	0	0	0	0	3.16434E-05	3.16434E-05	0	0	4.2915E-10	1.31001E-09	1.73916E-09	0.0017392
396466.283768577.2	396466.28	3768577	0	0	0	0	0	0	3.79976E-05	3.79976E-05	0	0	5.15326E-10	1.57307E-09	2.08839E-09	0.0020884
396566.283768577.2	396566.28	3768577	0	0	0	0	0	0	3.72132E-05	3.72132E-05	0	0	5.04687E-10	1.54059E-09	2.04528E-09	0.0020453
396866.283768577.2	396866.28	3768577	0	0	0	0	0	0	4.76217E-05	4.76217E-05	0	0	6.45848E-10	1.9715E-09	2.61735E-09	0.0026173
396966.283768577.2	396966.28	3768577	0	0	0	0	0	0	5.52952E-05	5.52952E-05	0	0	7.49917E-10	2.28917E-09	3.03909E-09	0.0030391
397066.283768577.2	397066.28	3768577	0	0	0	0	0	0	6.83391E-05	6.83391E-05	0	0	9.26819E-10	2.82918E-09	3.756E-09	0.003756
397166.283768577.2	397166.28	3768577	0	0	0	0	0	0	0.000117007	0.000117007	0	0	1.58685E-09	4.84398E-09	6.43083E-09	0.0064308
397266.283768577.2	397266.28	3768577	0	0	0	0	0	0	0.000515848	0.000515848	0	0	6.99596E-09	2.13557E-08	2.83516E-08	0.0283516
397366.283768577.2	397366.28	3768577	0	0	0	0	0	0	0.000216068	0.000216068	0	0	2.93032E-09	8.94501E-09	1.18753E-08	0.0118753
397466.283768577.2	397466.28	3768577	0	0	0	0	0	0	6.92328E-05	6.92328E-05	0	0	9.38939E-10	2.86618E-09	3.80512E-09	0.0038051
397566.283768577.2	397566.28	3768577	0	0	0	0	0	0	4.14429E-05	4.14429E-05	0	0	5.62051E-10	1.7157E-09	2.27775E-09	0.0022778
397666.283768577.2	397666.28	3768577	0	0	0	0	0	0	2.75516E-05	2.75516E-05	0	0	3.73657E-10	1.14061E-09	1.51427E-09	0.0015143
397766.283768577.2	397766.28	3768577	0	0	0	0	0	0	1.96067E-05	1.96067E-05	0	0	2.65907E-10	8.117E-10	1.07761E-09	0.0010776
397866.283768577.2	397866.28	3768577	0	0	0	0	0	0	1.43156E-05	1.43156E-05	0	0	1.94149E-10	5.92654E-10	7.86803E-10	0.0007868
396166.283768677.2	396166.28	3768677	0	0	0	0	0	0	4.57094E-05	4.57094E-05	0	0	6.19913E-10	1.89233E-09	2.51224E-09	0.0025122
396266.283768677.2	396266.28	3768677	0	0	0	0	0	0	5.21859E-05	5.21859E-05	0	0	7.07749E-10	2.16045E-09	2.8682E-09	0.0028682
396366.283768677.2	396366.28	3768677	0	0	0	0	0	0	5.06731E-05	5.06731E-05	0	0	6.87231E-10	2.09782E-09	2.78505E-09	0.0027851
396466.283768677.2	396466.28	3768677	0	0	0	0	0	0	6.22106E-05	6.22106E-05	0	0	8.43704E-10	2.57547E-09	3.41917E-09	0.0034192
396566.283768677.2	396566.28	3768677	0	0	0	0	0	0	6.28893E-05	6.28893E-05	0	0	8.52909E-10	2.60356E-09	3.45647E-09	0.0034565
396666.283768677.2	396666.28	3768677	0	0	0	0	0	0	6.42071E-05	6.42071E-05	0	0	8.7078E-10	2.65812E-09	3.5289E-09	0.0035289
396766.283768677.2	396766.28	3768677	0	0	0	0	0	0	6.66299E-05	6.66299E-05	0	0	9.03639E-10	2.75842E-09	3.66206E-09	0.0036621
396866.283768677.2	396866.28	3768677	0	0	0	0	0	0	7.3998E-05	7.3998E-05	0	0	1.00356E-09	3.06345E-09	4.06702E-09	0.004067
396966.283768677.2	396966.28	3768677	0	0	0	0	0	0	8.09988E-05	8.09988E-05	0	0	1.09851E-09	3.35328E-09	4.45179E-09	0.0044518
397066.283768677.2	397066.28	3768677	0	0	0	0	0	0	9.39578E-05	9.39578E-05	0	0	1.27426E-09	3.88977E-09	5.16403E-09	0.005164

-Unitigated Administrative Building and Water Quality Laboratory Rehabilitatio			Demolition - 2025	Demolition - 2026	Site Preparation - 2025	ite Preparation - 202	Grading - 2025	Grading - 2026	Infrastructure - 2025	nfrastructure - 2026	Paving - 2025	rchitectural Coating - 202	Child Risk			
Unique Identifier	X (UTM)	Y (UTM)	1900	1900	1900	1900	1900	1900	2025	2026	1900	2026	3rd Trimester	0<2	Total	per million
397166.283768677.2	397166.28	3768677	0	0	0	0	0	0	0.000147469	0.000147469	0	0	1.99998E-09	6.10507E-09	8.10505E-09	0.0081051
397366.283768677.2	397366.28	3768677	0	0	0	0	0	0	0.000196102	0.000196102	0	0	2.65955E-09	8.11845E-09	1.0778E-08	0.010778
397466.283768677.2	397466.28	3768677	0	0	0	0	0	0	7.90103E-05	7.90103E-05	0	0	1.07154E-09	3.27096E-09	4.3425E-09	0.0043425
397566.283768677.2	397566.28	3768677	0	0	0	0	0	0	4.30868E-05	4.30868E-05	0	0	5.84345E-10	1.78375E-09	2.3681E-09	0.0023681
397666.283768677.2	397666.28	3768677	0	0	0	0	0	0	2.82298E-05	2.82298E-05	0	0	3.82854E-10	1.16869E-09	1.55154E-09	0.0015515
397766.283768677.2	397766.28	3768677	0	0	0	0	0	0	2.08218E-05	2.08218E-05	0	0	2.82386E-10	8.62005E-10	1.14439E-09	0.0011444
397866.283768677.2	397866.28	3768677	0	0	0	0	0	0	1.52892E-05	1.52892E-05	0	0	2.07353E-10	6.32961E-10	8.40314E-10	0.0008403
396166.283768777.2	396166.28	3768777	0	0	0	0	0	0	0.000132727	0.000132727	0	0	1.80005E-09	5.49478E-09	7.29484E-09	0.0072948
396266.283768777.2	396266.28	3768777	0	0	0	0	0	0	0.000164923	0.000164923	0	0	2.23669E-09	6.82766E-09	9.06435E-09	0.0090644
396366.283768777.2	396366.28	3768777	0	0	0	0	0	0	0.000120907	0.000120907	0	0	1.63975E-09	5.00544E-09	6.64519E-09	0.0066452
396466.283768777.2	396466.28	3768777	0	0	0	0	0	0	0.000157991	0.000157991	0	0	2.14269E-09	6.54071E-09	8.6834E-09	0.0086834
396566.283768777.2	396566.28	3768777	0	0	0	0	0	0	0.000169188	0.000169188	0	0	2.29453E-09	7.00423E-09	9.29876E-09	0.0092988
396666.283768777.2	396666.28	3768777	0	0	0	0	0	0	0.000169128	0.000169128	0	0	2.29373E-09	7.00177E-09	9.2955E-09	0.0092955
396766.283768777.2	396766.28	3768777	0	0	0	0	0	0	0.000174954	0.000174954	0	0	2.37274E-09	7.24296E-09	9.61571E-09	0.0096157
396866.283768777.2	396866.28	3768777	0	0	0	0	0	0	0.000181896	0.000181896	0	0	2.46688E-09	7.53032E-09	9.9972E-09	0.0099972
396966.283768777.2	396966.28	3768777	0	0	0	0	0	0	0.000186382	0.000186382	0	0	2.52772E-09	7.71603E-09	1.02438E-08	0.0102438
397066.283768777.2	397066.28	3768777	0	0	0	0	0	0	0.000200791	0.000200791	0	0	2.72314E-09	8.31259E-09	1.10357E-08	0.0110357
397166.283768777.2	397166.28	3768777	0	0	0	0	0	0	0.000241802	0.000241802	0	0	3.27934E-09	1.00104E-08	1.32897E-08	0.0132897
397266.283768777.2	397266.28	3768777	0	0	0	0	0	0	0.000771231	0.000771231	0	0	1.04595E-08	3.19283E-08	4.23878E-08	0.0423878
397366.283768777.2	397366.28	3768777	0	0	0	0	0	0	0.000267969	0.000267969	0	0	3.63421E-09	1.10937E-08	1.47279E-08	0.0147279
397466.283768777.2	397466.28	3768777	0	0	0	0	0	0	9.42505E-05	9.42505E-05	0	0	1.27823E-09	3.90189E-09	5.18012E-09	0.0051801
397566.283768777.2	397566.28	3768777	0	0	0	0	0	0	5.0549E-05	5.0549E-05	0	0	6.85549E-10	2.09269E-09	2.77824E-09	0.0027782
397666.283768777.2	397666.28	3768777	0	0	0	0	0	0	3.17912E-05	3.17912E-05	0	0	4.31155E-10	1.31613E-09	1.74728E-09	0.0017473
397766.283768777.2	397766.28	3768777	0	0	0	0	0	0	2.17646E-05	2.17646E-05	0	0	2.95173E-10	9.01037E-10	1.19621E-09	0.0011962
397866.283768777.2	397866.28	3768777	0	0	0	0	0	0	1.58433E-05	1.58433E-05	0	0	2.14867E-10	6.55898E-10	8.70765E-10	0.0008708
396166.283768877.2	396166.28	3768877	0	0	0	0	0	0	0.000534373	0.000534373	0	0	7.24719E-09	2.21226E-08	2.93698E-08	0.0293698
396266.283768877.2	396266.28	3768877	0	0	0	0	0	0	0.000688214	0.000688214	0	0	9.3336E-09	2.84915E-08	3.78251E-08	0.0378251
396366.283768877.2	396366.28	3768877	0	0	0	0	0	0	0.000673899	0.000673899	0	0	9.13946E-09	2.78988E-08	3.70383E-08	0.0370383
396466.283768877.2	396466.28	3768877	0	0	0	0	0	0	0.000742351	0.000742351	0	0	1.00678E-08	3.07327E-08	4.08005E-08	0.0408005
396566.283768877.2	396566.28	3768877	0	0	0	0	0	0	0.00070014	0.00070014	0	0	9.49534E-09	2.89852E-08	3.84805E-08	0.0384805
396666.283768877.2	396666.28	3768877	0	0	0	0	0	0	0.000760661	0.000760661	0	0	1.03161E-08	3.14907E-08	4.18069E-08	0.0418069
396766.283768877.2	396766.28	3768877	0	0	0	0	0	0	0.000736205	0.000736205	0	0	9.98445E-09	3.04782E-08	4.04627E-08	0.0404627
396866.283768877.2	396866.28	3768877	0	0	0	0	0	0	0.000715148	0.000715148	0	0	9.69888E-09	2.96065E-08	3.93054E-08	0.0393054
396966.283768877.2	396966.28	3768877	0	0	0	0	0	0	0.000687674	0.000687674	0	0	9.32627E-09	2.84691E-08	3.77954E-08	0.0377954
397066.283768877.2	397066.28	3768877	0	0	0	0	0	0	0.000695221	0.000695221	0	0	9.42863E-09	2.87816E-08	3.82102E-08	0.0382102
397166.283768877.2	397166.28	3768877	0	0	0	0	0	0	0.000714546	0.000714546	0	0	9.69072E-09	2.95816E-08	3.92723E-08	0.0392723
397266.283768877.2	397266.28	3768877	0	0	0	0	0	0	0.000750688	0.000750688	0	0	1.01809E-08	3.10779E-08	4.12587E-08	0.0412587
397366.283768877.2	397366.28	3768877	0	0	0	0	0	0	0.000369107	0.000369107	0	0	5.00585E-09	1.52807E-08	2.02865E-08	0.0202865
397466.283768877.2	397466.28	3768877	0	0	0	0	0	0	9.87798E-05	9.87798E-05	0	0	1.33966E-09	4.0894E-09	5.42906E-09	0.0054291
397566.283768877.2	397566.28	3768877	0	0	0	0	0	0	5.05103E-05	5.05103E-05	0	0	6.85024E-10	2.09108E-09	2.77611E-09	0.0027761
397666.283768877.2	397666.28	3768877	0	0	0	0	0	0	3.1331E-05	3.1331E-05	0	0	4.24913E-10	1.29708E-09	1.72199E-09	0.001722
397766.283768877.2	397766.28	3768877	0	0	0	0	0	0	2.16575E-05	2.16575E-05	0	0	2.9372E-10	8.966E-10	1.19032E-09	0.0011903
397866.283768877.2	397866.28	3768877	0	0	0	0	0	0	1.60291E-05	1.60291E-05	0	0	2.17387E-10	6.6359E-10	8.80977E-10	0.000881
3964253767739	396425	3767739	0	0	0	0	0	0	7.20397E-06	7.20397E-06	0	0	9.77007E-11	2.98238E-10	3.95939E-10	0.0003959
3964753767739	396475	3767739	0	0	0	0	0	0	7.37609E-06	7.37609E-06	0	0	1.00035E-10	3.05364E-10	4.05398E-10	0.0004054
3965253767739	396525	3767739	0	0	0	0	0	0	6.87507E-06	6.87507E-06	0	0	9.32401E-11	2.84622E-10	3.77862E-10	0.0003779
3965753767739	396575	3767739	0	0	0	0	0	0	7.07382E-06	7.07382E-06	0	0	9.59355E-11	2.9285E-10	3.88786E-10	0.0003888
3966253767739	396625	3767739	0	0	0	0	0	0	6.79381E-06	6.79381E-06	0	0	9.2138E-11	2.81258E-10	3.73396E-10	0.0003734
3966753767739	396675	3767739	0	0	0	0	0	0	6.95207E-06	6.95207E-06	0	0	9.42844E-11	2.8781E-10	3.82094E-10	0.0003821
3967253767739	396725	3767739	0	0	0	0	0	0	7.26558E-06	7.26558E-06	0	0	9.85362E-11	3.00789E-10	3.99325E-10	0.0003993
3967753767739	396775	3767739	0	0	0	0	0	0	7.32665E-06	7.32665E-06	0	0	9.93644E-11	3.03317E-10	4.02681E-10	0.0004027
3968253767739	396825	3767739	0	0	0	0	0	0	7.73952E-06	7.73952E-06	0	0	1.04964E-10	3.20409E-10	4.25373E-10	0.0004254
3968753767739	396875	3767739	0	0	0	0	0	0	7.96493E-06	7.96493E-06	0	0	1.08021E-10	3.29741E-10	4.37762E-10	0.0004378
3969253767739	396925	3767739	0	0	0	0	0	0	7.94294E-06	7.94294E-06	0	0	1.07723E-10	3.28831E-10	4.36553E-10	0.0004366
3969753767739	396975	3767739	0	0	0	0	0	0	7.89019E-06	7.89019E-06	0	0	1.07007E-10	3.26647E-10	4.33654E-10	0.0004337
3970253767739	397025	3767739	0	0	0	0	0	0	7.85697E-06	7.85697E-06	0	0	1.06557E-10	3.25272E-10	4.31828E-10	0.0004318
3970753767739	397075	3767739	0	0	0	0	0	0	7.89709E-06	7.89709E-06	0	0	1.07101E-10	3.26933E-10	4.34033E-10	0.000434
3971253767739	397125	3767739	0	0	0	0	0	0	7.90673E-06	7.90673E-06	0	0	1.07232E-10	3.27332E-10	4.34563E-10	0.0004346
3971753767739	397175	3767739	0	0	0	0	0	0	7.80276E-06	7.80276E-06	0	0	1.05821E-10	3.23028E-10	4.28849E-10	0.0004288
3972253767739	397225	3767739	0	0	0	0	0	0	7.63719E-06	7.63719E-06	0	0	1.03576E-10	3.16173E-10	4.19749E-10	0.0004197
3972753767739	397275	3767739	0	0	0	0	0	0	7.20278E-06	7.20278E-06	0	0	9.76845E-11	2.98189E-10	3.95873E-10	0.0003959
3973253767739	397325	3767739	0	0	0	0	0	0	7.20566E-06	7.20566E-06	0	0	9.77236E-11	2.98308E-10	3.96032E-10	0.000396
3973753767739	397375	3767739	0	0	0	0	0	0	7.18178E-06	7.18178E-06	0	0	9.73997E-11	2.97319E-10	3.94719E-10	0.0003947
3974253767739	397425	3767739	0	0	0	0	0	0	6.98887E-06	6.98887E-06	0	0	9.47834E-11	2.89333E-10	3.84116E-10	0.0003841
3974753767739	397475	3767739	0	0	0	0	0	0	6.17468E-06	6.17468E-06	0	0	8.37413E-11	2.55626E-10	3.39368E-10	0.0003394
3975253767739	397525	3767739	0	0	0	0	0	0	5.96908E-06	5.96908E-06	0	0	8.0953E-11	2.47115E-10	3.28068E-10	0.0003281
3964253767789	396425	3767789	0	0	0	0	0	0	7.6955E-06	7.6955E-06	0	0	1.04367E-10	3.18587E-10	4.22954E-10	0.000423
3964753767789	396475	3767789	0	0	0	0	0	0	7.41389E-06	7.41389E-06	0	0	1.00548E-10	3.06929E-10	4.07476E-10	0.0004075
3965253767789	396525	3767789	0	0	0	0	0	0	7.02164E-06	7.02164E-06	0	0	9.52279E-11	2.9069E-10	3.85918E-10	0.0003859
3965753767789	396575	3767789	0	0	0	0	0	0	7.10663E-06	7.10663E-06	0	0	9.63805E-11	2.94208E-10	3.90589E-10	0.0003906
3966253767789	396625	3767789	0	0	0	0	0	0	7.29373E-06	7.29373E-06	0	0	9.8918E-11	3.01954E-10	4.00872E-10	0.0004009

-Unitigated Administrative Building and Water Quality Laboratory Rehabilitatio			Demolition - 2025	Demolition - 2026	Site Preparation - 2025	te Preparation - 202	Grading - 2025	Grading - 2026	Infrastructure - 2025	nfrastructure - 2026	Paving - 2025	rchitectural Coating - 202	Child Risk			
Unique Identifier	X (UTM)	Y (UTM)	1900	1900	1900	1900	1900	1900	2025	2026	1900	2026	3rd Trimester	0<2	Total	per million
3966753767789	396675	3767789	0	0	0	0	0	0	7.51273E-06	7.51273E-06	0	0	1.01888E-10	3.11021E-10	4.12909E-10	0.0004129
3967253767789	396725	3767789	0	0	0	0	0	0	8.10376E-06	8.10376E-06	0	0	1.09904E-10	3.35489E-10	4.45393E-10	0.0004454
3967753767789	396775	3767789	0	0	0	0	0	0	8.30081E-06	8.30081E-06	0	0	1.12576E-10	3.43646E-10	4.56222E-10	0.0004562
3968253767789	396825	3767789	0	0	0	0	0	0	8.67271E-06	8.67271E-06	0	0	1.1762E-10	3.59043E-10	4.76663E-10	0.0004767
3968753767789	396875	3767789	0	0	0	0	0	0	8.79661E-06	8.79661E-06	0	0	1.193E-10	3.64172E-10	4.83472E-10	0.0004835
3969253767789	396925	3767789	0	0	0	0	0	0	8.79264E-06	8.79264E-06	0	0	1.19246E-10	3.64008E-10	4.83254E-10	0.0004833
3969753767789	396975	3767789	0	0	0	0	0	0	8.68443E-06	8.68443E-06	0	0	1.17779E-10	3.59528E-10	4.77307E-10	0.0004773
3970253767789	397025	3767789	0	0	0	0	0	0	8.63588E-06	8.63588E-06	0	0	1.1712E-10	3.57518E-10	4.74638E-10	0.0004746
3970753767789	397075	3767789	0	0	0	0	0	0	8.71677E-06	8.71677E-06	0	0	1.18217E-10	3.60867E-10	4.79084E-10	0.0004791
3971253767789	397125	3767789	0	0	0	0	0	0	8.77979E-06	8.77979E-06	0	0	1.19072E-10	3.63476E-10	4.82548E-10	0.0004825
3971753767789	397175	3767789	0	0	0	0	0	0	8.74035E-06	8.74035E-06	0	0	1.18537E-10	3.61843E-10	4.8038E-10	0.0004804
3972253767789	397225	3767789	0	0	0	0	0	0	8.63093E-06	8.63093E-06	0	0	1.17053E-10	3.57313E-10	4.74366E-10	0.0004744
3972753767789	397275	3767789	0	0	0	0	0	0	8.15315E-06	8.15315E-06	0	0	1.10573E-10	3.37533E-10	4.48107E-10	0.0004481
3973253767789	397325	3767789	0	0	0	0	0	0	7.95506E-06	7.95506E-06	0	0	1.07887E-10	3.29333E-10	4.3722E-10	0.0004372
3973753767789	397375	3767789	0	0	0	0	0	0	7.98046E-06	7.98046E-06	0	0	1.08231E-10	3.30384E-10	4.38616E-10	0.0004386
3974253767789	397425	3767789	0	0	0	0	0	0	7.81708E-06	7.81708E-06	0	0	1.06016E-10	3.2362E-10	4.29636E-10	0.0004296
3974753767789	397475	3767789	0	0	0	0	0	0	6.81191E-06	6.81191E-06	0	0	9.23836E-11	2.82007E-10	3.74391E-10	0.0003744
3975253767789	397525	3767789	0	0	0	0	0	0	6.60683E-06	6.60683E-06	0	0	8.96022E-11	2.73517E-10	3.63119E-10	0.0003631
3964253767839	396425	3767839	0	0	0	0	0	0	8.21604E-06	8.21604E-06	0	0	1.11426E-10	3.40137E-10	4.51564E-10	0.0004516
3964753767839	396475	3767839	0	0	0	0	0	0	8.16376E-06	8.16376E-06	0	0	1.10717E-10	3.37973E-10	4.4869E-10	0.0004487
3965253767839	396525	3767839	0	0	0	0	0	0	7.40369E-06	7.40369E-06	0	0	1.00409E-10	3.06506E-10	4.06916E-10	0.0004069
3965753767839	396575	3767839	0	0	0	0	0	0	7.61628E-06	7.61628E-06	0	0	1.03292E-10	3.15307E-10	4.186E-10	0.0004186
3966253767839	396625	3767839	0	0	0	0	0	0	7.84574E-06	7.84574E-06	0	0	1.06404E-10	3.24807E-10	4.31211E-10	0.0004312
3966753767839	396675	3767839	0	0	0	0	0	0	8.75109E-06	8.75109E-06	0	0	1.18683E-10	3.62288E-10	4.8097E-10	0.000481
3967253767839	396725	3767839	0	0	0	0	0	0	9.16746E-06	9.16746E-06	0	0	1.2433E-10	3.79525E-10	5.03854E-10	0.0005039
3967753767839	396775	3767839	0	0	0	0	0	0	9.40771E-06	9.40771E-06	0	0	1.27588E-10	3.89471E-10	5.17059E-10	0.0005171
3968253767839	396825	3767839	0	0	0	0	0	0	9.64221E-06	9.64221E-06	0	0	1.30768E-10	3.99179E-10	5.29947E-10	0.0005299
3968753767839	396875	3767839	0	0	0	0	0	0	9.75542E-06	9.75542E-06	0	0	1.32304E-10	4.03866E-10	5.3617E-10	0.0005362
3969253767839	396925	3767839	0	0	0	0	0	0	9.78484E-06	9.78484E-06	0	0	1.32703E-10	4.05084E-10	5.37786E-10	0.0005378
3969753767839	396975	3767839	0	0	0	0	0	0	9.68405E-06	9.68405E-06	0	0	1.31336E-10	4.00911E-10	5.32247E-10	0.0005322
3970253767839	397025	3767839	0	0	0	0	0	0	9.60676E-06	9.60676E-06	0	0	1.30287E-10	3.97711E-10	5.27999E-10	0.000528
3970753767839	397075	3767839	0	0	0	0	0	0	9.81404E-06	9.81404E-06	0	0	1.33099E-10	4.06293E-10	5.39391E-10	0.0005394
3971253767839	397125	3767839	0	0	0	0	0	0	9.99446E-06	9.99446E-06	0	0	1.35545E-10	4.13762E-10	5.49307E-10	0.0005493
3971753767839	397175	3767839	0	0	0	0	0	0	9.86235E-06	9.86235E-06	0	0	1.33754E-10	4.08293E-10	5.42046E-10	0.000542
3972253767839	397225	3767839	0	0	0	0	0	0	9.48179E-06	9.48179E-06	0	0	1.28593E-10	3.92538E-10	5.21131E-10	0.0005211
3972753767839	397275	3767839	0	0	0	0	0	0	8.98205E-06	8.98205E-06	0	0	1.21815E-10	3.71849E-10	4.93664E-10	0.0004937
3973253767839	397325	3767839	0	0	0	0	0	0	8.56318E-06	8.56318E-06	0	0	1.16134E-10	3.54508E-10	4.70643E-10	0.0004706
3973753767839	397375	3767839	0	0	0	0	0	0	8.90805E-06	8.90805E-06	0	0	1.20812E-10	3.68786E-10	4.89597E-10	0.0004896
3974753767839	397475	3767839	0	0	0	0	0	0	8.39684E-06	8.39684E-06	0	0	1.13878E-10	3.47622E-10	4.615E-10	0.0004615
3975253767839	397525	3767839	0	0	0	0	0	0	7.17645E-06	7.17645E-06	0	0	9.73275E-11	2.97099E-10	3.94426E-10	0.0003944
3964253767889	396425	3767889	0	0	0	0	0	0	8.68786E-06	8.68786E-06	0	0	1.17825E-10	3.5967E-10	4.77495E-10	0.0004775
3964753767889	396475	3767889	0	0	0	0	0	0	7.72394E-06	7.72394E-06	0	0	1.04753E-10	3.19764E-10	4.24517E-10	0.0004245
3965253767889	396525	3767889	0	0	0	0	0	0	7.92693E-06	7.92693E-06	0	0	1.07506E-10	3.28168E-10	4.35674E-10	0.0004357
3965753767889	396575	3767889	0	0	0	0	0	0	8.28594E-06	8.28594E-06	0	0	1.12374E-10	3.43031E-10	4.55405E-10	0.0004554
3974753767889	397475	3767889	0	0	0	0	0	0	9.11005E-06	9.11005E-06	0	0	1.23551E-10	3.77148E-10	5.00699E-10	0.0005007
3975253767889	397525	3767889	0	0	0	0	0	0	7.91657E-06	7.91657E-06	0	0	1.07365E-10	3.27739E-10	4.35104E-10	0.0004351
3964253767939	396425	3767939	0	0	0	0	0	0	9.223E-06	9.223E-06	0	0	1.25083E-10	3.81824E-10	5.06907E-10	0.0005069
3964753767939	396475	3767939	0	0	0	0	0	0	8.29009E-06	8.29009E-06	0	0	1.12431E-10	3.43203E-10	4.55633E-10	0.0004556
3965253767939	396525	3767939	0	0	0	0	0	0	8.58704E-06	8.58704E-06	0	0	1.16458E-10	3.55496E-10	4.71954E-10	0.000472
3974753767939	397475	3767939	0	0	0	0	0	0	9.67969E-06	9.67969E-06	0	0	1.31276E-10	4.00731E-10	5.32007E-10	0.000532
3975253767939	397525	3767939	0	0	0	0	0	0	8.84858E-06	8.84858E-06	0	0	1.20005E-10	3.66323E-10	4.86328E-10	0.0004863
3964253767989	396425	3767989	0	0	0	0	0	0	9.04835E-06	9.04835E-06	0	0	1.22714E-10	3.74594E-10	4.97308E-10	0.0004973
3964753767989	396475	3767989	0	0	0	0	0	0	9.00918E-06	9.00918E-06	0	0	1.22183E-10	3.72972E-10	4.95156E-10	0.0004952
3974753767989	397475	3767989	0	0	0	0	0	0	1.11242E-05	1.11242E-05	0	0	1.50867E-10	4.60532E-10	6.11399E-10	0.0006114
3975253767989	397525	3767989	0	0	0	0	0	0	1.00822E-05	1.00822E-05	0	0	1.36735E-10	4.17395E-10	5.5413E-10	0.0005541
3964253768039	396425	3768039	0	0	0	0	0	0	9.75461E-06	9.75461E-06	0	0	1.32293E-10	4.03832E-10	5.36125E-10	0.0005361
3964753768039	396475	3768039	0	0	0	0	0	0	1.00792E-05	1.00792E-05	0	0	1.36695E-10	4.1727E-10	5.53965E-10	0.000554
3974753768039	397475	3768039	0	0	0	0	0	0	1.48514E-05	1.48514E-05	0	0	2.01416E-10	6.14837E-10	8.16253E-10	0.0008163
3975253768039	397525	3768039	0	0	0	0	0	0	1.38974E-05	1.38974E-05	0	0	1.88477E-10	5.7534E-10	7.63817E-10	0.0007638
3964253768089	396425	3768089	0	0	0	0	0	0	1.07571E-05	1.07571E-05	0	0	1.45888E-10	4.45333E-10	5.91221E-10	0.0005912
3964753768089	396475	3768089	0	0	0	0	0	0	1.13061E-05	1.13061E-05	0	0	1.53334E-10	4.68064E-10	6.21398E-10	0.0006214
3974753768089	397475	3768089	0	0	0	0	0	0	1.99899E-05	1.99899E-05	0	0	2.71104E-10	8.27565E-10	1.09867E-09	0.0010987
3975253768089	397525	3768089	0	0	0	0	0	0	1.841E-05	1.841E-05	0	0	2.49678E-10	7.62159E-10	1.01184E-09	0.0010118
3964253768139	396425	3768139	0	0	0	0	0	0	1.33947E-05	1.33947E-05	0	0	1.8166E-10	5.54529E-10	7.36189E-10	0.0007362
3964753768139	396475	3768139	0	0	0	0	0	0	1.23382E-05	1.23382E-05	0	0	1.67331E-10	5.10791E-10	6.78123E-10	0.0006781
3974253768139	397425	3768139	0	0	0	0	0	0	4.24084E-05	4.24084E-05	0	0	5.75145E-10	1.75567E-09	2.33082E-09	0.0023308
3974753768139	397475	3768139	0	0	0	0	0	0	3.07235E-05	3.07235E-05	0	0	4.16674E-10	1.27193E-09	1.6886E-09	0.0016886
3975253768139	397525	3768139	0	0	0	0	0	0	2.31816E-05	2.31816E-05	0	0	3.1439E-10	9.59697E-10	1.27409E-09	0.0012741
3964253768189	396425	3768189	0	0	0	0	0	0	1.44308E-05	1.44308E-05	0	0	1.95712E-10	5.97425E-10	7.93136E-10	0.0007931
3964753768189	396475	3768189	0	0	0	0	0	0	1.35066E-05	1.35066E-05	0	0	1.83177E-10	5.59161E-10	7.42338E-10	0.0007423
3973753768189	397375	3768189	0	0	0	0	0	0	0.000251374	0.000251374	0	0	3.40915E-09	1.04067E-08	1.38158E-08	0.0138158

-Unitigated Administrative Building and Water Quality Laboratory Rehabilitatio			Demolition - 2025	Demolition - 2026	Site Preparation - 2025	ite Preparation - 202	Grading - 2025	Grading - 2026	Infrastructure - 2025	nfrastructure - 2026	Paving - 2025	rchitectural Coating - 202	Child Risk			
Unique Identifier	X (UTM)	Y (UTM)	1900	1900	1900	1900	1900	1900	2025	2026	1900	2026	3rd Trimester	0<2	Total	per million
3974253768189	397425	3768189	0	0	0	0	0	0	7.26092E-05	7.26092E-05	0	0	9.8473E-10	3.00596E-09	3.99069E-09	0.0039907
3974753768189	397475	3768189	0	0	0	0	0	0	4.16037E-05	4.16037E-05	0	0	5.64232E-10	1.72236E-09	2.28659E-09	0.0022866
3975253768189	397525	3768189	0	0	0	0	0	0	2.86451E-05	2.86451E-05	0	0	3.88487E-10	1.18588E-09	1.57437E-09	0.0015744
3964253768239	396425	3768239	0	0	0	0	0	0	1.56187E-05	1.56187E-05	0	0	2.11822E-10	6.46601E-10	8.58423E-10	0.0008584
3964753768239	396475	3768239	0	0	0	0	0	0	1.49348E-05	1.49348E-05	0	0	2.02547E-10	6.18289E-10	8.20837E-10	0.0008208
3973753768239	397375	3768239	0	0	0	0	0	0	0.000366194	0.000366194	0	0	4.96635E-09	1.51601E-08	2.01265E-08	0.0201265
3974253768239	397425	3768239	0	0	0	0	0	0	9.31217E-05	9.31217E-05	0	0	1.26292E-09	3.85516E-09	5.11808E-09	0.0051181
3974753768239	397475	3768239	0	0	0	0	0	0	5.02084E-05	5.02084E-05	0	0	6.80929E-10	2.07858E-09	2.75951E-09	0.0027595
3975253768239	397525	3768239	0	0	0	0	0	0	3.40586E-05	3.40586E-05	0	0	4.61904E-10	1.41E-09	1.8719E-09	0.0018719
3964253768289	396425	3768289	0	0	0	0	0	0	1.67187E-05	1.67187E-05	0	0	2.2674E-10	6.92141E-10	9.18881E-10	0.0009189
3964753768289	396475	3768289	0	0	0	0	0	0	1.66394E-05	1.66394E-05	0	0	2.25665E-10	6.88858E-10	9.14523E-10	0.0009145
3973253768289	397325	3768289	0	0	0	0	0	0	0.000970128	0.000970128	0	0	1.31569E-08	4.01624E-08	5.33194E-08	0.0533194
3973753768289	397375	3768289	0	0	0	0	0	0	0.000256808	0.000256808	0	0	3.48284E-09	1.06316E-08	1.41145E-08	0.0141145
3974253768289	397425	3768289	0	0	0	0	0	0	0.000113184	0.000113184	0	0	1.53501E-09	4.68571E-09	6.22072E-09	0.0062207
3974753768289	397475	3768289	0	0	0	0	0	0	6.23968E-05	6.23968E-05	0	0	8.46228E-10	2.58317E-09	3.4294E-09	0.0034294
3975253768289	397525	3768289	0	0	0	0	0	0	4.04861E-05	4.04861E-05	0	0	5.49075E-10	1.67609E-09	2.22516E-09	0.0022252
3964253768339	396425	3768339	0	0	0	0	0	0	1.89441E-05	1.89441E-05	0	0	2.56921E-10	7.8427E-10	1.04119E-09	0.0010412
3964753768339	396475	3768339	0	0	0	0	0	0	1.88028E-05	1.88028E-05	0	0	2.55004E-10	7.78419E-10	1.03342E-09	0.0010334
3965253768339	396525	3768339	0	0	0	0	0	0	2.00438E-05	2.00438E-05	0	0	2.71835E-10	8.29797E-10	1.10163E-09	0.0011016
3972753768339	397275	3768339	0	0	0	0	0	0	0.000788164	0.000788164	0	0	1.06891E-08	3.26293E-08	4.33184E-08	0.0433184
3973253768339	397325	3768339	0	0	0	0	0	0	0.000581036	0.000581036	0	0	7.88004E-09	2.40544E-08	3.19344E-08	0.0319344
3973753768339	397375	3768339	0	0	0	0	0	0	0.00021402	0.00021402	0	0	2.90256E-09	8.86026E-09	1.17628E-08	0.0117628
3974253768339	397425	3768339	0	0	0	0	0	0	0.000112533	0.000112533	0	0	1.52618E-09	4.65878E-09	6.18496E-09	0.006185
3974753768339	397475	3768339	0	0	0	0	0	0	6.76729E-05	6.76729E-05	0	0	9.17783E-10	2.8016E-09	3.71938E-09	0.0037194
3975253768339	397525	3768339	0	0	0	0	0	0	4.496E-05	4.496E-05	0	0	6.0975E-10	1.86131E-09	2.47106E-09	0.0024711
3964253768389	396425	3768389	0	0	0	0	0	0	2.10518E-05	2.10518E-05	0	0	2.85505E-10	8.71525E-10	1.15703E-09	0.001157
3964753768389	396475	3768389	0	0	0	0	0	0	2.14284E-05	2.14284E-05	0	0	2.90614E-10	8.87119E-10	1.17773E-09	0.0011777
3965253768389	396525	3768389	0	0	0	0	0	0	2.24599E-05	2.24599E-05	0	0	3.04602E-10	9.29819E-10	1.23442E-09	0.0012344
3972253768389	397225	3768389	0	0	0	0	0	0	0.000189473	0.000189473	0	0	2.56964E-09	7.84402E-09	1.04137E-08	0.0104137
3972753768389	397275	3768389	0	0	0	0	0	0	0.000750467	0.000750467	0	0	1.01779E-08	3.10687E-08	4.12466E-08	0.0412466
3973253768389	397325	3768389	0	0	0	0	0	0	0.00058123	0.00058123	0	0	7.88267E-09	2.40624E-08	3.19451E-08	0.0319451
3973753768389	397375	3768389	0	0	0	0	0	0	0.000206027	0.000206027	0	0	2.79415E-09	8.52934E-09	1.13235E-08	0.0113235
3974253768389	397425	3768389	0	0	0	0	0	0	0.000112723	0.000112723	0	0	1.52876E-09	4.66665E-09	6.19542E-09	0.0061954
3974753768389	397475	3768389	0	0	0	0	0	0	7.12803E-05	7.12803E-05	0	0	9.66707E-10	2.95094E-09	3.91765E-09	0.0039176
3975253768389	397525	3768389	0	0	0	0	0	0	4.89604E-05	4.89604E-05	0	0	6.64004E-10	2.02692E-09	2.69092E-09	0.0026909
3964253768439	396425	3768439	0	0	0	0	0	0	2.38928E-05	2.38928E-05	0	0	3.24035E-10	9.89141E-10	1.31318E-09	0.0013132
3964753768439	396475	3768439	0	0	0	0	0	0	2.46051E-05	2.46051E-05	0	0	3.33695E-10	1.01863E-09	1.35232E-09	0.0013523
3965253768439	396525	3768439	0	0	0	0	0	0	2.54921E-05	2.54921E-05	0	0	3.45725E-10	1.05535E-09	1.40107E-09	0.0014011
3971753768439	397175	3768439	0	0	0	0	0	0	0.000102075	0.000102075	0	0	1.38435E-09	4.22583E-09	5.61019E-09	0.0056102
3972253768439	397225	3768439	0	0	0	0	0	0	0.000198768	0.000198768	0	0	2.69571E-09	8.22884E-09	1.09245E-08	0.0109245
3972753768439	397275	3768439	0	0	0	0	0	0	0.000754179	0.000754179	0	0	1.02282E-08	3.12224E-08	4.14506E-08	0.0414506
3973253768439	397325	3768439	0	0	0	0	0	0	0.000567481	0.000567481	0	0	7.69621E-09	2.34932E-08	3.11894E-08	0.0311894
3973753768439	397375	3768439	0	0	0	0	0	0	0.000190445	0.000190445	0	0	2.58282E-09	7.88424E-09	1.04671E-08	0.0104671
3974253768439	397425	3768439	0	0	0	0	0	0	0.000104214	0.000104214	0	0	1.41335E-09	4.31436E-09	5.72771E-09	0.0057277
3974753768439	397475	3768439	0	0	0	0	0	0	7.37959E-05	7.37959E-05	0	0	1.00082E-09	3.05509E-09	4.05591E-09	0.0040559
3975253768439	397525	3768439	0	0	0	0	0	0	5.18253E-05	5.18253E-05	0	0	7.02858E-10	2.14552E-09	2.84838E-09	0.0028484
3964253768489	396425	3768489	0	0	0	0	0	0	2.72532E-05	2.72532E-05	0	0	3.6961E-10	1.12826E-09	1.49787E-09	0.0014979
3964753768489	396475	3768489	0	0	0	0	0	0	2.8417E-05	2.8417E-05	0	0	3.85394E-10	1.17644E-09	1.56183E-09	0.0015618
3965253768489	396525	3768489	0	0	0	0	0	0	2.95221E-05	2.95221E-05	0	0	4.00381E-10	1.22219E-09	1.62257E-09	0.0016226
3970753768489	397075	3768489	0	0	0	0	0	0	5.81399E-05	5.81399E-05	0	0	7.88496E-10	2.40694E-09	3.19544E-09	0.0031954
3971253768489	397125	3768489	0	0	0	0	0	0	7.3862E-05	7.3862E-05	0	0	1.00172E-09	3.05783E-09	4.05955E-09	0.0040595
3971753768489	397175	3768489	0	0	0	0	0	0	0.000106825	0.000106825	0	0	1.44876E-09	4.42244E-09	5.87121E-09	0.0058712
3972253768489	397225	3768489	0	0	0	0	0	0	0.000197614	0.000197614	0	0	2.68005E-09	8.18104E-09	1.08611E-08	0.0108611
3972753768489	397275	3768489	0	0	0	0	0	0	0.000740434	0.000740434	0	0	1.00418E-08	3.06533E-08	4.06952E-08	0.0406952
3973253768489	397325	3768489	0	0	0	0	0	0	0.000489762	0.000489762	0	0	6.64218E-09	2.02757E-08	2.69179E-08	0.0269179
3973753768489	397375	3768489	0	0	0	0	0	0	0.000187596	0.000187596	0	0	2.54418E-09	7.7663E-09	1.03105E-08	0.0103105
3974253768489	397425	3768489	0	0	0	0	0	0	0.000103543	0.000103543	0	0	1.40426E-09	4.28661E-09	5.69087E-09	0.0056909
3974753768489	397475	3768489	0	0	0	0	0	0	6.45349E-05	6.45349E-05	0	0	8.75226E-10	2.67169E-09	3.54691E-09	0.0035469
3975253768489	397525	3768489	0	0	0	0	0	0	4.67519E-05	4.67519E-05	0	0	6.34052E-10	1.93549E-09	2.56954E-09	0.0025695
3964253768539	396425	3768539	0	0	0	0	0	0	3.16938E-05	3.16938E-05	0	0	4.29834E-10	1.3121E-09	1.74193E-09	0.0017419
3964753768539	396475	3768539	0	0	0	0	0	0	3.34216E-05	3.34216E-05	0	0	4.53266E-10	1.38363E-09	1.83689E-09	0.0018369
3965253768539	396525	3768539	0	0	0	0	0	0	3.45357E-05	3.45357E-05	0	0	4.68375E-10	1.42975E-09	1.89812E-09	0.0018981
3965753768539	396575	3768539	0	0	0	0	0	0	3.32369E-05	3.32369E-05	0	0	4.50761E-10	1.37598E-09	1.82674E-09	0.0018267
3970253768539	397025	3768539	0	0	0	0	0	0	5.49967E-05	5.49967E-05	0	0	7.45868E-10	2.27682E-09	3.02268E-09	0.0030227
3970753768539	397075	3768539	0	0	0	0	0	0	6.43527E-05	6.43527E-05	0	0	8.72754E-10	2.66414E-09	3.5369E-09	0.0035369
3971253768539	397125	3768539	0	0	0	0	0	0	8.08591E-05	8.08591E-05	0	0	1.09662E-09	3.3475E-09	4.44411E-09	0.0044441
3971753768539	397175	3768539	0	0	0	0	0	0	0.000115452	0.000115452	0	0	1.56577E-09	4.77961E-09	6.34538E-09	0.0063454
3972253768539	397225	3768539	0	0	0	0	0	0	0.000202489	0.000202489	0	0	2.74617E-09	8.38287E-09	1.1129E-08	0.011129
3972753768539	397275	3768539	0	0	0	0	0	0	0.000674464	0.000674464	0	0	9.14712E-09	2.79222E-08	3.70693E-08	0.0370693
3973253768539	397325	3768539	0	0	0	0	0	0	0.000472319	0.000472319	0	0	6.40562E-09	1.95536E-08	2.59592E-08	0.0259592
3973753768539	397375	3768539	0	0	0	0	0	0	0.000188947	0.000188947	0	0	2.56251E-09	7.82224E-09	1.03848E-08	0.0103848

-Unitigated Administrative Building and Water Quality Laboratory Rehabilitatio			Demolition - 2025	Demolition - 2026	Site Preparation - 2025	ite Preparation - 202	Grading - 2025	Grading - 2026	Infrastructure - 2025	nfrastructure - 2026	Paving - 2025	rchitectural Coating - 202	Child Risk			
Unique Identifier	X (UTM)	Y (UTM)	1900	1900	1900	1900	1900	1900	2025	2026	1900	2026	3rd Trimester	0<2	Total	per million
3974253768539	397425	3768539	0	0	0	0	0	0	0.000101197	0.000101197	0	0	1.37244E-09	4.18948E-09	5.56192E-09	0.0055619
3974753768539	397475	3768539	0	0	0	0	0	0	6.5278E-05	6.5278E-05	0	0	8.85304E-10	2.70245E-09	3.58776E-09	0.0035878
3975253768539	397525	3768539	0	0	0	0	0	0	4.64848E-05	4.64848E-05	0	0	6.3043E-10	1.92443E-09	2.55486E-09	0.0025549
3964253768589	396425	3768589	0	0	0	0	0	0	3.69868E-05	3.69868E-05	0	0	5.01617E-10	1.53122E-09	2.03284E-09	0.0020328
3964753768589	396475	3768589	0	0	0	0	0	0	4.01359E-05	4.01359E-05	0	0	5.44325E-10	1.66159E-09	2.20592E-09	0.0022059
3965253768589	396525	3768589	0	0	0	0	0	0	3.99925E-05	3.99925E-05	0	0	5.42381E-10	1.65565E-09	2.19804E-09	0.002198
3965753768589	396575	3768589	0	0	0	0	0	0	3.85848E-05	3.85848E-05	0	0	5.23289E-10	1.59738E-09	2.12067E-09	0.0021207
3966253768589	396625	3768589	0	0	0	0	0	0	3.8145E-05	3.8145E-05	0	0	5.17324E-10	1.57917E-09	2.09649E-09	0.0020965
3968253768589	396825	3768589	0	0	0	0	0	0	4.69972E-05	4.69972E-05	0	0	6.37379E-10	1.94564E-09	2.58302E-09	0.002583
3968753768589	396875	3768589	0	0	0	0	0	0	4.98163E-05	4.98163E-05	0	0	6.75611E-10	2.06235E-09	2.73796E-09	0.002738
3969253768589	396925	3768589	0	0	0	0	0	0	5.41098E-05	5.41098E-05	0	0	7.3384E-10	2.2401E-09	2.97394E-09	0.0029739
3969753768589	396975	3768589	0	0	0	0	0	0	5.80856E-05	5.80856E-05	0	0	7.87761E-10	2.40469E-09	3.19246E-09	0.0031925
3970253768589	397025	3768589	0	0	0	0	0	0	6.38991E-05	6.38991E-05	0	0	8.66603E-10	2.64537E-09	3.51197E-09	0.003512
3970753768589	397075	3768589	0	0	0	0	0	0	7.2588E-05	7.2588E-05	0	0	9.84443E-10	3.00508E-09	3.98952E-09	0.0039895
3971253768589	397125	3768589	0	0	0	0	0	0	9.11865E-05	9.11865E-05	0	0	1.23668E-09	3.77504E-09	5.01172E-09	0.0050117
3971753768589	397175	3768589	0	0	0	0	0	0	0.000129253	0.000129253	0	0	1.75293E-09	5.35096E-09	7.10389E-09	0.0071039
3972253768589	397225	3768589	0	0	0	0	0	0	0.000226062	0.000226062	0	0	3.06586E-09	9.35876E-09	1.24246E-08	0.0124246
3972753768589	397275	3768589	0	0	0	0	0	0	0.000720408	0.000720408	0	0	9.77022E-09	2.98243E-08	3.95945E-08	0.0395945
3973253768589	397325	3768589	0	0	0	0	0	0	0.000469065	0.000469065	0	0	6.36149E-09	1.94189E-08	2.57804E-08	0.0257804
3973753768589	397375	3768589	0	0	0	0	0	0	0.000188904	0.000188904	0	0	2.56192E-09	7.82044E-09	1.03824E-08	0.0103824
3974253768589	397425	3768589	0	0	0	0	0	0	9.82419E-05	9.82419E-05	0	0	1.33236E-09	4.06713E-09	5.39949E-09	0.0053995
3974753768589	397475	3768589	0	0	0	0	0	0	6.48067E-05	6.48067E-05	0	0	8.78913E-10	2.68294E-09	3.56186E-09	0.0035619
3975253768589	397525	3768589	0	0	0	0	0	0	4.6876E-05	4.6876E-05	0	0	6.35735E-10	1.94063E-09	2.57636E-09	0.0025764
3964253768639	396425	3768639	0	0	0	0	0	0	4.45817E-05	4.45817E-05	0	0	6.0462E-10	1.84564E-09	2.45026E-09	0.0024503
3964753768639	396475	3768639	0	0	0	0	0	0	5.04824E-05	5.04824E-05	0	0	6.84646E-10	2.08993E-09	2.77458E-09	0.0027746
3965253768639	396525	3768639	0	0	0	0	0	0	4.74389E-05	4.74389E-05	0	0	6.43369E-10	1.96393E-09	2.6073E-09	0.0026073
3965753768639	396575	3768639	0	0	0	0	0	0	4.7726E-05	4.7726E-05	0	0	6.47263E-10	1.97582E-09	2.62308E-09	0.0026231
3966253768639	396625	3768639	0	0	0	0	0	0	4.8578E-05	4.8578E-05	0	0	6.58818E-10	2.01109E-09	2.66991E-09	0.0026699
3966753768639	396675	3768639	0	0	0	0	0	0	4.95918E-05	4.95918E-05	0	0	6.72566E-10	2.05306E-09	2.72562E-09	0.0027256
3967253768639	396725	3768639	0	0	0	0	0	0	5.11221E-05	5.11221E-05	0	0	6.93321E-10	2.11641E-09	2.80973E-09	0.0028097
3967753768639	396775	3768639	0	0	0	0	0	0	5.38951E-05	5.38951E-05	0	0	7.30928E-10	2.23121E-09	2.96214E-09	0.0029621
3968253768639	396825	3768639	0	0	0	0	0	0	5.6558E-05	5.6558E-05	0	0	7.67043E-10	2.34145E-09	3.1085E-09	0.0031085
3968753768639	396875	3768639	0	0	0	0	0	0	6.06448E-05	6.06448E-05	0	0	8.22468E-10	2.51064E-09	3.33311E-09	0.0033331
3969253768639	396925	3768639	0	0	0	0	0	0	6.52452E-05	6.52452E-05	0	0	8.84859E-10	2.70109E-09	3.58595E-09	0.003586
3969753768639	396975	3768639	0	0	0	0	0	0	6.93001E-05	6.93001E-05	0	0	9.39852E-10	2.86897E-09	3.80882E-09	0.0038088
3970253768639	397025	3768639	0	0	0	0	0	0	7.47681E-05	7.47681E-05	0	0	1.01401E-09	3.09534E-09	4.10934E-09	0.0041093
3970753768639	397075	3768639	0	0	0	0	0	0	8.29754E-05	8.29754E-05	0	0	1.12532E-09	3.43511E-09	4.56043E-09	0.0045604
3971253768639	397125	3768639	0	0	0	0	0	0	9.97722E-05	9.97722E-05	0	0	1.35312E-09	4.13048E-09	5.4836E-09	0.0054836
3971753768639	397175	3768639	0	0	0	0	0	0	0.000145964	0.000145964	0	0	1.97957E-09	6.04276E-09	8.02233E-09	0.0080223
3972253768639	397225	3768639	0	0	0	0	0	0	0.000287662	0.000287662	0	0	3.90129E-09	1.19089E-08	1.58102E-08	0.0158102
3972753768639	397275	3768639	0	0	0	0	0	0	0.001002035	0.001002035	0	0	1.35897E-08	4.14834E-08	5.5073E-08	0.055073
3973253768639	397325	3768639	0	0	0	0	0	0	0.000422525	0.000422525	0	0	5.73031E-09	1.74922E-08	2.32225E-08	0.0232225
3973753768639	397375	3768639	0	0	0	0	0	0	0.000186159	0.000186159	0	0	2.5247E-09	7.70682E-09	1.02315E-08	0.0102315
3974253768639	397425	3768639	0	0	0	0	0	0	0.000108512	0.000108512	0	0	1.47165E-09	4.49231E-09	5.96395E-09	0.005964
3974753768639	397475	3768639	0	0	0	0	0	0	6.44145E-05	6.44145E-05	0	0	8.73594E-10	2.66671E-09	3.5403E-09	0.0035403
3975253768639	397525	3768639	0	0	0	0	0	0	4.7333E-05	4.7333E-05	0	0	6.41933E-10	1.95955E-09	2.60148E-09	0.0026015
3964253768689	396425	3768689	0	0	0	0	0	0	5.74646E-05	5.74646E-05	0	0	7.79339E-10	2.37899E-09	3.15832E-09	0.0031583
3964753768689	396475	3768689	0	0	0	0	0	0	6.81666E-05	6.81666E-05	0	0	9.2448E-10	2.82204E-09	3.74652E-09	0.0037465
3965253768689	396525	3768689	0	0	0	0	0	0	7.07517E-05	7.07517E-05	0	0	9.59539E-10	2.92906E-09	3.8886E-09	0.0038886
3965753768689	396575	3768689	0	0	0	0	0	0	6.95382E-05	6.95382E-05	0	0	9.43081E-10	2.87882E-09	3.8219E-09	0.0038219
3966253768689	396625	3768689	0	0	0	0	0	0	7.03557E-05	7.03557E-05	0	0	9.54168E-10	2.91266E-09	3.86683E-09	0.0038668
3966753768689	396675	3768689	0	0	0	0	0	0	6.98859E-05	6.98859E-05	0	0	9.47796E-10	2.89321E-09	3.84101E-09	0.003841
3967253768689	396725	3768689	0	0	0	0	0	0	7.10507E-05	7.10507E-05	0	0	9.63593E-10	2.94144E-09	3.90503E-09	0.003905
3967753768689	396775	3768689	0	0	0	0	0	0	7.20714E-05	7.20714E-05	0	0	9.77436E-10	2.98369E-09	3.96113E-09	0.0039611
3968253768689	396825	3768689	0	0	0	0	0	0	7.59723E-05	7.59723E-05	0	0	1.03034E-09	3.14519E-09	4.17553E-09	0.0041755
3968753768689	396875	3768689	0	0	0	0	0	0	8.00195E-05	8.00195E-05	0	0	1.08523E-09	3.31274E-09	4.39796E-09	0.004398
3969253768689	396925	3768689	0	0	0	0	0	0	8.34748E-05	8.34748E-05	0	0	1.13209E-09	3.45578E-09	4.58787E-09	0.0045879
3969753768689	396975	3768689	0	0	0	0	0	0	8.70377E-05	8.70377E-05	0	0	1.18041E-09	3.60328E-09	4.78369E-09	0.0047837
3970253768689	397025	3768689	0	0	0	0	0	0	9.20079E-05	9.20079E-05	0	0	1.24782E-09	3.80905E-09	5.05687E-09	0.0050569
3970753768689	397075	3768689	0	0	0	0	0	0	0.000100925	0.000100925	0	0	1.36875E-09	4.17819E-09	5.54694E-09	0.0055469
3971253768689	397125	3768689	0	0	0	0	0	0	0.000117858	0.000117858	0	0	1.5984E-09	4.87922E-09	6.47762E-09	0.0064776
3971753768689	397175	3768689	0	0	0	0	0	0	0.000164349	0.000164349	0	0	2.22891E-09	6.8039E-09	9.03281E-09	0.0090328
3972253768689	397225	3768689	0	0	0	0	0	0	0.000372703	0.000372703	0	0	5.05461E-09	1.54296E-08	2.04842E-08	0.0204842
3972753768689	397275	3768689	0	0	0	0	0	0	0.001023715	0.001023715	0	0	1.38837E-08	4.23809E-08	5.62646E-08	0.0562646
3973253768689	397325	3768689	0	0	0	0	0	0	0.000342623	0.000342623	0	0	4.64668E-09	1.41843E-08	1.8831E-08	0.018831
3973753768689	397375	3768689	0	0	0	0	0	0	0.000173454	0.000173454	0	0	2.35239E-09	7.18083E-09	9.53321E-09	0.0095332
3974253768689	397425	3768689	0	0	0	0	0	0	0.000108349	0.000108349	0	0	1.46943E-09	4.48554E-09	5.95497E-09	0.005955
3974753768689	397475	3768689	0	0	0	0	0	0	7.39421E-05	7.39421E-05	0	0	1.00281E-09	3.06114E-09	4.06394E-09	0.0040639
3975253768689	397525	3768689	0	0	0	0	0	0	5.3666E-05	5.3666E-05	0	0	7.27821E-10	2.22173E-09	2.94955E-09	0.0029495

Garvey Reservoir Rehab -Unmitigated Administration Building and Water Quality Laboratory

Maximum Individual Non-Cancer Impact Calculations - Sensitive Receptors (Maximum Impacted Senior Residential Receptor) (IMPACT AT ALL OTHER LOCATIONS ON THE PROJECT SITE WOULD BE LESS THAN SHOWN)

Maximum Non-cancer Chronic Hazards / Toxicological Endpoints*

Receptor Group	Pollutant	CREL[1]	CONC	WFrac	$CONC_{WF}$	HI		ALIM	BN	CVS	DEV	ENDC	EYE	HEM	IMMUN	KIDN	NS	REPRO	RESP	SK
Project:																				
MEI - Max	DPM	5.00E+00	2.54E-01	1.00E+00	2.54E-01	0.051		-	-	-	-	-	-	-	-	-	-	-	5.08E-02	-
							Total Risk				-			-				-	0.051	
							Threshold				1.00			1.00				1.00	1.00	
							Over?				NO			NO				NO	NO	

Notes:

1. California Air Resources Board, "Consolidated Table of OEHHA/ARB Approved Risk Assessment Health Values," "OEHHA/ARB Approved Chronic Reference Exposure Levels and Target Organs," "OEHHA/ARB Approved Acute Reference Exposure Levels and Target Organs," and "OEHHA/ARB Approved 8-Hour Reference Exposure Levels and Target Organs," http://www.arb.ca.gov/toxics/healthval/healthval.htm. Tables last updated: May 8, 2018. Downloaded: 08/14/18.

Source: ESA, 2020

Where:

$CONC_{WF}$	Pollutant Concentration ($\mu g/m^3$) multiplied by the weight fraction
CREL	Chronic Reference Exposure Level
HI	Hazard Index
MEI	Maximally Exposed Individual
WFrac	Weight fraction of speciated component

* Key to Toxicological Endpoints

ALIM	Alimentary Tract	EYE	Eye	NS	Nervous System
BN	Bone	HEM	Hematologic System	REPRO	Reproductive System
CVS	Cardiovascular System	IMMUN	Immune System	RESP	Respiratory System
DEV	Developmental System	KIDN	Kidney	SK	Skin
ENDC	Endocrine System				

Chronic HI

Garvey Reservoir Rehab -Mitigated Administration Building and Water Quality Laboratory

Cancer Risk Summary & Maximum Annual GLC for Chronic Calculations

Cancer Risk Summary

Max Risk: 1.315723

XY	X	Y	Offroad Risk	Haul Risk	Total Risk
7449041451	574490	4145130	0.002161329	0.000210508	0.002372
7448041451	574480	4145140	0.002393909	0.00021528	0.002609
7449041451	574490	4145140	0.002741117	0.000224036	0.002965
7449041451	574490	4145150	0.00310826	0.000229873	0.003338
7450041451	574500	4145150	0.003564559	0.000252003	0.003817
7446041451	574460	4145160	0.003978773	0.000238255	0.004217
7449041451	574490	4145160	0.004352008	0.000237321	0.004589
7450041451	574500	4145160	0.004759022	0.000237529	0.004997
7451041451	574510	4145160	0.005256853	0.000240672	0.005498
7446041451	574460	4145170	0.005590217	0.000234602	0.005825
7447041451	574470	4145170	0.005699862	0.000231393	0.005931
7448041451	574480	4145170	0.005626765	0.000231672	0.005858
7449041451	574490	4145170	0.005632857	0.000221112	0.005854
7450041451	574500	4145170	0.005519336	0.000199058	0.005718
7451041451	574510	4145170	0.005229165	0.0001958	0.005425
7452041451	574520	4145170	0.004854823	0.000190052	0.005045
7446041451	574460	4145180	0.004338717	0.000196141	0.004535
7447041451	574470	4145180	0.003889063	0.000186825	0.004076
7448041451	574480	4145180	0.002278726	0.000242247	0.002521
7449041451	574490	4145180	0.002514629	0.0002367	0.002751
7450041451	574500	4145180	0.002926627	0.000249371	0.003176
7451041451	574510	4145180	0.003385141	0.000273124	0.003658
7452041451	574520	4145180	0.00391509	0.000276835	0.004192
7453041451	574530	4145180	0.004485464	0.000268796	0.004754
7445041451	574450	4145190	0.005105123	0.000270899	0.005376
7446041451	574460	4145190	0.00578348	0.000272481	0.006056
7447041451	574470	4145190	0.006600277	0.000276537	0.006877
7448041451	574480	4145190	0.007250393	0.000271223	0.007522
7449041451	574490	4145190	0.007572681	0.000262681	0.007835
7450041451	574500	4145190	0.007571574	0.000263549	0.007835
7451041451	574510	4145190	0.007475773	0.00025562	0.007731
7452041451	574520	4145190	0.007290817	0.000230559	0.007521
7444041452	574440	4145200	0.006807938	0.000218652	0.007027
7445041452	574450	4145200	0.006161145	0.000213857	0.006375
7446041452	574460	4145200	0.005450669	0.000208778	0.005659
7447041452	574470	4145200	0.004759022	0.000200928	0.00496
7448041452	574480	4145200	0.002350715	0.000255359	0.002606
7449041452	574490	4145200	0.002643101	0.000262506	0.002906
7450041452	574500	4145200	0.003061744	0.000274547	0.003336
7451041452	574510	4145200	0.003605538	0.000291527	0.003897
7443041452	574430	4145210	0.004285556	0.000323836	0.004609
7444041452	574440	4145210	0.005111214	0.000328822	0.00544
7445041452	574450	4145210	0.005884818	0.00031007	0.006195
7446041452	574460	4145210	0.007090356	0.000317888	0.007408
7447041452	574470	4145210	0.008374527	0.000322235	0.008697
7448041452	574480	4145210	0.009604984	0.000322313	0.009927
7449041452	574490	4145210	0.010507615	0.00031042	0.010818
7450041452	574500	4145210	0.01076456	0.000306305	0.011071
7451041452	574510	4145210	0.010571851	0.000298671	0.010871
7443041452	574430	4145220	0.010199724	0.000266054	0.010466
7444041452	574440	4145220	0.009261652	0.000250953	0.009513
7445041452	574450	4145220	0.008099308	0.000237304	0.008337
7446041452	574460	4145220	0.006898201	0.000228283	0.007126
7447041452	574470	4145220	0.005808399	0.000217011	0.006025
7448041452	574480	4145220	0.002435995	0.000309183	0.002745
7449041452	574490	4145220	0.00276216	0.000292533	0.003055
7450041452	574500	4145220	0.003231749	0.00031172	0.003543
7451041452	574510	4145220	0.003854176	0.000368708	0.004223
7452041452	574520	4145220	0.00462335	0.000372052	0.004995
7453041452	574530	4145220	0.005489433	0.000348521	0.005838
7444041452	574440	4145230	0.006836733	0.00036282	0.0072
7445041452	574450	4145230	0.008744993	0.000383208	0.009128
7446041452	574460	4145230	0.011063037	0.00038738	0.01145
7447041452	574470	4145230	0.013370559	0.000386214	0.013757
7448041452	574480	4145230	0.015436641	0.000377671	0.015814
7449041452	574490	4145230	0.01675127	0.000346342	0.017098

Max GLC for Chronic Calcs

Max GLC: 0.023949

XY	X	Y	2025	2026	2027	2034	2035
57449041451	574490	4145130	2.842E-05	4.317E-05	0		
57448041451	574480	4145140	3.115E-05	4.749E-05	0		
57449041451	574490	4145140	3.526E-05	5.397E-05	0		
57449041451	574490	4145150	3.954E-05	6.076E-05	0		
57450041451	574500	4145150	4.514E-05	6.947E-05	0		
57446041451	574460	4145160	4.96E-05	7.676E-05	0		
57449041451	574490	4145160	5.383E-05	8.353E-05	0		
57450041451	574500	4145160	5.846E-05	9.095E-05	0		
57451041451	574510	4145160	6.418E-05	0.0001001	0		
57446041451	574460	4145170	6.787E-05	0.000106	0		
57447041451	574470	4145170	6.905E-05	0.000108	0		
57448041451	574480	4145170	6.823E-05	0.0001066	0		
57449041451	574490	4145170	6.811E-05	0.0001066	0		
57450041451	574500	4145170	6.641E-05	0.0001041	0		
57451041451	574510	4145170	6.305E-05	9.875E-05	0		
57452041451	574520	4145170	5.869E-05	9.183E-05	0		
57446041451	574460	4145180	5.293E-05	8.254E-05	0		
57447041451	574470	4145180	4.764E-05	7.419E-05	0		
57448041451	574480	4145180	3.033E-05	4.589E-05	0		
57449041451	574490	4145180	3.291E-05	5.008E-05	0		
57450041451	574500	4145180	3.783E-05	5.781E-05	0		
57451041451	574510	4145180	4.348E-05	6.659E-05	0		
57452041451	574520	4145180	4.958E-05	7.63E-05	0		
57453041451	574530	4145180	5.592E-05	8.654E-05	0		
57445041451	574450	4145190	6.301E-05	9.785E-05	0		
57446041451	574460	4145190	7.075E-05	0.0001102	0		
57447041451	574470	4145190	8.012E-05	0.0001252	0		
57448041451	574480	4145190	8.742E-05	0.0001369	0		
57449041451	574490	4145190	9.093E-05	0.0001426	0		
57450041451	574500	4145190	9.093E-05	0.0001426	0		
57451041451	574510	4145190	8.97E-05	0.0001407	0		
57452041451	574520	4145190	8.714E-05	0.0001369	0		
57444041452	574440	4145200	8.143E-05	0.0001279	0		
57445041452	574450	4145200	7.398E-05	0.000116	0		
57446041452	574460	4145200	6.581E-05	0.000103	0		
57447041452	574470	4145200	5.78E-05	9.028E-05	0		
57448041452	574480	4145200	3.139E-05	4.743E-05	0		
57449041452	574490	4145200	3.485E-05	5.289E-05	0		
57450041452	574500	4145200	3.983E-05	6.073E-05	0		
57451041452	574510	4145200	4.632E-05	7.093E-05	0		
57443041452	574430	4145210	5.465E-05	8.39E-05	0		
57444041452	574440	4145210	6.413E-05	9.902E-05	0		
57445041452	574450	4145210	7.259E-05	0.0001128	0		
57446041452	574460	4145210	8.645E-05	0.0001348	0		
57447041452	574470	4145210	0.0001011	0.0001583	0		
57448041452	574480	4145210	0.0001151	0.0001807	0		
57449041452	574490	4145210	0.0001252	0.0001969	0		
57450041452	574500	4145210	0.000128	0.0002015	0		
57451041452	574510	4145210	0.0001257	0.0001979	0		
57443041452	574430	4145220	0.0001209	0.0001905	0		
57444041452	574440	4145220	0.0001099	0.0001732	0		
57445041452	574450	4145220	9.646E-05	0.0001517	0		
57446041452	574460	4145220	8.263E-05	0.0001297	0		
57447041452	574470	4145220	7.003E-05	0.0001097	0		
57448041452	574480	4145220	3.334E-05	4.997E-05	0		
57449041452	574490	4145220	3.675E-05	5.56E-05	0		
57450041452	574500	4145220	4.244E-05	6.45E-05	0		
57451041452	574510	4145220	5.056E-05	7.686E-05	0		
57452041452	574520	4145220	5.937E-05	9.093E-05	0		
57453041452	574530	4145220	6.879E-05	0.0001063	0		
57444041452	574440	4145230	8.438E-05	0.000131	0		
57445041452	574450	4145230	0.0001065	0.0001662	0		
57446041452	574460	4145230	0.0001329	0.0002084	0		
57447041452	574470	4145230	0.0001591	0.0002504	0		
57448041452	574480	4145230	0.0001825	0.0002879	0		
57449041452	574490	4145230	0.0001969	0.0003112	0		

Garvey Reservoir Rehab -Mitigated Administration Building and Water Quality Laboratory

Cancer Risk Summary & Maximum Annual GLC for Chronic Calculations

Cancer Risk Summary

Max Risk: 1.315723

XY	X	Y	Offroad Risk	Haul Risk	Total Risk
7450041452	574500	4145230	0.016412368	0.000352303	0.016765
7451041452	574510	4145230	0.015414491	0.000303	0.015717
7452041452	574520	4145230	0.013352285	0.000290708	0.013643
7444041452	574440	4145240	0.011012091	0.000273771	0.011286
7445041452	574450	4145240	0.008871251	0.000255562	0.009127
7446041452	574460	4145240	0.0071042	0.000243204	0.007347
7447041452	574470	4145240	0.002491924	0.000347	0.002839
7448041452	574480	4145240	0.002886756	0.000394192	0.003281
7449041452	574490	4145240	0.003370743	0.000383648	0.003754
7450041452	574500	4145240	0.004025842	0.00040503	0.004431
7451041452	574510	4145240	0.004834333	0.000383478	0.005218
7445041452	574450	4145250	0.005992801	0.000403302	0.006396
7446041452	574460	4145250	0.007832395	0.000442057	0.008274
7447041452	574470	4145250	0.010489894	0.00047208	0.010962
7448041452	574480	4145250	0.014205631	0.000466292	0.014672
7446041452	574460	4145260	0.019085926	0.000466932	0.019553
7447041452	574470	4145260	0.02443858	0.00046757	0.024906
7448041452	574480	4145260	0.028816614	0.000435026	0.029252
7447041452	574470	4145270	0.029159946	0.00042659	0.029587
7449041451	574490	4145130	0.025348409	0.000368135	0.025717
7448041451	574480	4145140	0.020191787	0.000339586	0.020531
7449041451	574490	4145140	0.015492017	0.000323176	0.015815
7449041451	574490	4145150	0.01152432	0.000288553	0.011813
7450041451	574500	4145150	0.008716198	0.000263072	0.008979
7446041451	574460	4145160	0.002526258	0.000383498	0.00291
7449041451	574490	4145160	0.002939917	0.000442947	0.003383
7450041451	574500	4145160	0.003466544	0.000468231	0.003935
7451041451	574510	4145160	0.004141025	0.000444303	0.004585
7446041451	574460	4145170	0.005042548	0.000439745	0.005482
7447041451	574470	4145170	0.051870791	0.000515566	0.052386
7448041451	574480	4145170	0.032599355	0.000406083	0.033005
7449041451	574490	4145170	0.019537241	0.000342318	0.01988
7450041451	574500	4145170	0.013322382	0.000303008	0.013625
7451041451	574510	4145170	0.010493217	0.000303511	0.010797
7452041451	574520	4145170	0.002525704	0.00040197	0.002928
7446041451	574460	4145180	0.002953761	0.000464518	0.003418
7447041451	574470	4145180	0.003495339	0.000502425	0.003998
7448041451	574480	4145180	0.004181449	0.000482731	0.004664
7449041451	574490	4145180	0.1075797	0.000608043	0.108188
7450041451	574500	4145180	0.048124045	0.000491032	0.048615
7451041451	574510	4145180	0.025472451	0.000407577	0.02588
7452041451	574520	4145180	0.018582557	0.000410562	0.018993
7453041451	574530	4145180	0.012111306	0.00037545	0.012487
7445041451	574450	4145190	0.002544532	0.000541891	0.003086
7446041451	574460	4145190	0.002939363	0.000513566	0.003453
7447041451	574470	4145190	0.003478726	0.000557309	0.004036
7448041451	574480	4145190	0.004209691	0.000603302	0.004813
7449041451	574490	4145190	0.343266466	0.001055183	0.344322
7450041451	574500	4145190	0.096320632	0.000833868	0.097155
7451041451	574510	4145190	0.041155516	0.000625607	0.041781
7452041451	574520	4145190	0.022544717	0.000488469	0.023033
7444041452	574440	4145200	0.014069959	0.00042339	0.014493
7445041452	574450	4145200	0.002521274	0.000653547	0.003175
7446041452	574460	4145200	0.002921643	0.000675013	0.003597
7447041452	574470	4145200	0.0034527	0.000734831	0.004188
7448041452	574480	4145200	0.004149885	0.000723557	0.004873
7449041452	574490	4145200	0.432752026	0.002307662	0.43506
7450041452	574500	4145200	0.120151182	0.001210536	0.121362
7451041452	574510	4145200	0.04966793	0.000826089	0.050494
7443041452	574430	4145210	0.026742225	0.000609176	0.027351
7444041452	574440	4145210	0.015881311	0.000499854	0.016381
7445041452	574450	4145210	0.00237785	0.000777282	0.003155
7446041452	574460	4145210	0.002851315	0.000764905	0.003616
7447041452	574470	4145210	0.00335856	0.000858647	0.004217
7448041452	574480	4145210	0.004024181	0.000888542	0.004913
7449041452	574490	4145210	0.223221606	0.018340726	0.241562

Max GLC for Chronic Calcs

Max GLC: 0.023949

XY	X	Y	2025	2026	2027	2034	2035
57450041452	574500	4145230	0.0001931	0.0003052	0		
57451041452	574510	4145230	0.0001809	0.0002861	0		
57452041452	574520	4145230	0.0001572	0.0002483	0		
57444041452	574440	4145240	0.0001303	0.0002054	0		
57445041452	574450	4145240	0.0001056	0.0001661	0		
57446041452	574460	4145240	8.525E-05	0.0001337	0		
57447041452	574470	4145240	3.466E-05	5.167E-05	0		
57448041452	574480	4145240	4.001E-05	5.972E-05	0		
57449041452	574490	4145240	4.533E-05	6.834E-05	0		
57450041452	574500	4145240	5.317E-05	8.065E-05	0		
57451041452	574510	4145240	6.198E-05	9.497E-05	0		
57445041452	574450	4145250	7.552E-05	0.0001164	0		
57446041452	574460	4145250	9.715E-05	0.0001506	0		
57447041452	574470	4145250	0.0001279	0.0001995	0		
57448041452	574480	4145250	0.0001701	0.0002671	0		
57446041452	574460	4145260	0.0002256	0.0003559	0		
57447041452	574470	4145260	0.0002865	0.0004533	0		
57448041452	574480	4145260	0.0003357	0.0005324	0		
57447041452	574470	4145270	0.0003395	0.0005385	0		
57449041451	574490	4145130	0.0002951	0.0004681	0		
57448041451	574480	4145140	0.0002359	0.0003737	0		
57449041451	574490	4145140	0.0001821	0.0002879	0		
57449041451	574490	4145150	0.0001364	0.000215	0		
57450041451	574500	4145150	0.0001039	0.0001634	0		
57446041451	574460	4145160	3.572E-05	5.296E-05	0		
57449041451	574490	4145160	4.151E-05	6.157E-05	0		
57450041451	574500	4145160	4.796E-05	7.162E-05	0		
57451041451	574510	4145160	5.519E-05	8.346E-05	0		
57446041451	574460	4145170	6.537E-05	9.979E-05	0		
57447041451	574470	4145170	0.0005995	0.0009536	0		
57448041451	574480	4145170	0.0003783	0.0006008	0		
57449041451	574490	4145170	0.0002285	0.0003619	0		
57450041451	574500	4145170	0.0001571	0.000248	0		
57451041451	574510	4145170	0.0001249	0.0001965	0		
57452041451	574520	4145170	3.605E-05	5.329E-05	0		
57446041451	574460	4145180	4.206E-05	6.222E-05	0		
57447041451	574470	4145180	4.891E-05	7.277E-05	0		
57448041451	574480	4145180	5.635E-05	8.49E-05	0		
57449041451	574490	4145180	0.0012349	0.0019693	0		
57450041451	574500	4145180	0.0005564	0.0008849	0		
57451041451	574510	4145180	0.0002972	0.0004711	0		
57452041451	574520	4145180	0.0002189	0.0003457	0		
57453041451	574530	4145180	0.0001446	0.0002273	0		
57445041451	574450	4145190	3.881E-05	5.618E-05	0		
57446041451	574460	4145190	4.278E-05	6.285E-05	0		
57447041451	574470	4145190	4.972E-05	7.346E-05	0		
57448041451	574480	4145190	5.887E-05	8.76E-05	0		
57449041451	574490	4145190	0.0039244	0.0062675	0		
57450041451	574500	4145190	0.001111	0.0017684	0		
57451041451	574510	4145190	0.0004796	0.0007605	0		
57452041451	574520	4145190	0.0002654	0.0004193	0		
57444041452	574440	4145200	0.0001678	0.0002638	0		
57445041452	574450	4145200	4.057E-05	5.778E-05	0		
57446041452	574460	4145200	4.552E-05	6.546E-05	0		
57447041452	574470	4145200	5.265E-05	7.622E-05	0		
57448041452	574480	4145200	6.038E-05	8.87E-05	0		
57449041452	574490	4145200	0.0049652	0.0079191	0		
57450041452	574500	4145200	0.0013889	0.0022091	0		
57451041452	574510	4145200	0.0005801	0.0009191	0		
57443041452	574430	4145210	0.0003153	0.0004979	0		
57444041452	574440	4145210	0.0001898	0.0002982	0		
57445041452	574450	4145210	4.119E-05	5.742E-05	0		
57446041452	574460	4145210	4.636E-05	6.582E-05	0		
57447041452	574470	4145210	5.383E-05	7.676E-05	0		
57448041452	574480	4145210	6.195E-05	8.942E-05	0		
57449041452	574490	4145210	0.0028732	0.0043969	0		

Garvey Reservoir Rehab -Mitigated Administration Building and Water Quality Laboratory

Cancer Risk Summary & Maximum Annual GLC for Chronic Calculations

Cancer Risk Summary

Max Risk: 1.315723

XY	X	Y	Offroad Risk	Haul Risk	Total Risk
7450041452	574500	4145210	0.192851139	0.003600294	0.196451
7451041452	574510	4145210	0.102222616	0.001643646	0.103866
7443041452	574430	4145220	0.050484728	0.001029884	0.051515
7444041452	574440	4145220	0.028242918	0.000737745	0.028981
7445041452	574450	4145220	0.017936872	0.000567951	0.018505
7446041452	574460	4145220	0.00221006	0.000916037	0.003126
7447041452	574470	4145220	0.002764929	0.00095383	0.003719
7448041452	574480	4145220	0.00323341	0.001064946	0.004298
7449041452	574490	4145220	0.003848639	0.001148952	0.004998
7450041452	574500	4145220	0.059957363	0.028792782	0.08875
7451041452	574510	4145220	0.090079192	0.012950111	0.103029
7452041452	574520	4145220	0.093696358	0.004178698	0.097875
7453041452	574530	4145220	0.069666454	0.002006106	0.071673
7444041452	574440	4145230	0.04479428	0.001215984	0.04601
7445041452	574450	4145230	0.028263961	0.000854856	0.029119
7446041452	574460	4145230	0.018946932	0.000614929	0.019562
7447041452	574470	4145230	0.002123673	0.001123853	0.003248
7448041452	574480	4145230	0.002631472	0.001211166	0.003843
7449041452	574490	4145230	0.002947116	0.001342466	0.00429
7450041452	574500	4145230	0.003628796	0.001503251	0.005132
7451041452	574510	4145230	0.023962345	0.005351417	0.029314
7452041452	574520	4145230	0.035747487	0.029226262	0.064974
7444041452	574440	4145240	0.047684912	0.01184089	0.059526
7445041452	574450	4145240	0.050803694	0.003850943	0.054655
7446041452	574460	4145240	0.045013015	0.002301906	0.047315
7447041452	574470	4145240	0.033819845	0.001428397	0.035248
7448041452	574480	4145240	0.024666729	0.000903685	0.02557
7449041452	574490	4145240	0.017641164	0.000704482	0.018346
7450041452	574500	4145240	0.002217259	0.00143005	0.003647
7451041452	574510	4145240	0.002282603	0.001612017	0.003895
7445041452	574450	4145250	0.002620951	0.001739162	0.00436
7446041452	574460	4145250	0.003386802	0.002088393	0.005475
7447041452	574470	4145250	0.003950531	0.00204528	0.005996
7448041452	574480	4145250	0.007477988	0.002617346	0.010095
7446041452	574460	4145260	0.009668667	0.003039091	0.012708
7447041452	574470	4145260	0.012764191	0.003755999	0.01652
7448041452	574480	4145260	0.017366498	0.006430831	0.023797
7447041452	574470	4145270	0.023322198	0.028351612	0.051674
7449041451	574490	4145130	0.02936816	0.011875333	0.041243
7448041451	574480	4145140	0.030939734	0.003805116	0.034745
7449041451	574490	4145140	0.03029571	0.002277751	0.032573
7449041451	574490	4145150	0.025456392	0.001514271	0.026971
7450041451	574500	4145150	0.019847347	0.001077606	0.020925
7446041451	574460	4145160	0.015310384	0.000786803	0.016097
7449041451	574490	4145160	0.002109276	0.002512242	0.004622
7450041451	574500	4145160	0.002387817	0.002868202	0.005256
7451041451	574510	4145160	0.002496908	0.002785054	0.005282
7446041451	574460	4145170	0.003136502	0.003419169	0.006556
7447041451	574470	4145170	0.00366036	0.003456473	0.007117
7448041451	574480	4145170	0.00433318	0.003528897	0.007862
7449041451	574490	4145170	0.005208122	0.00366206	0.00887
7450041451	574500	4145170	0.006390402	0.004067017	0.010457
7451041451	574510	4145170	0.007981357	0.004451788	0.012433
7452041451	574520	4145170	0.010135487	0.005164033	0.0153
7446041451	574460	4145180	0.012889341	0.008105052	0.020994
7447041451	574470	4145180	0.01984624	0.010777998	0.030624
7448041451	574480	4145180	0.021779419	0.004342501	0.026122
7449041451	574490	4145180	0.021405631	0.0023681	0.023774
7450041451	574500	4145180	0.019168436	0.001551541	0.02072
7451041451	574510	4145180	0.015992063	0.001144391	0.017136
7452041451	574520	4145180	0.013015044	0.000840314	0.013855
7453041451	574530	4145180	0.002008491	0.007294835	0.009303
7445041451	574450	4145190	0.002247162	0.009064351	0.011312
7446041451	574460	4145190	0.002402769	0.006645186	0.009048
7447041451	574470	4145190	0.002898939	0.008683399	0.011582
7448041451	574480	4145190	0.003328657	0.009298762	0.012627

Max GLC for Chronic Calcs

Max GLC: 0.023949

XY	X	Y	2025	2026	2027	2034	2035
57450041452	574500	4145210	0.0022595	0.0035759	0		
57451041452	574510	4145210	0.0011928	0.0018906	0		
57443041452	574430	4145220	0.0005931	0.0009377	0		
57444041452	574440	4145220	0.0003347	0.0005275	0		
57445041452	574450	4145220	0.0002144	0.0003368	0		
57446041452	574460	4145220	4.181E-05	5.69E-05	0		
57447041452	574470	4145220	4.881E-05	6.768E-05	0		
57448041452	574480	4145220	5.616E-05	7.823E-05	0		
57449041452	574490	4145220	6.469E-05	9.096E-05	0		
57450041452	574500	4145220	0.001206	0.0016152	0		
57451041452	574510	4145220	0.0012604	0.0018753	0		
57452041452	574520	4145220	0.001142	0.0017815	0		
57453041452	574530	4145220	0.0008291	0.0013046	0		
57444041452	574440	4145230	0.0005317	0.0008375	0		
57445041452	574450	4145230	0.0003371	0.00053	0		
57446041452	574460	4145230	0.0002267	0.0003561	0		
57447041452	574470	4145230	4.461E-05	5.91E-05	0		
57448041452	574480	4145230	5.197E-05	6.994E-05	0		
57449041452	574490	4145230	5.795E-05	7.807E-05	0		
57450041452	574500	4145230	6.863E-05	9.34E-05	0		
57451041452	574510	4145230	0.00037	0.0005335	0		
57452041452	574520	4145230	0.0009384	0.0011825	0		
57444041452	574440	4145240	0.0007579	0.0010834	0		
57445041452	574450	4145240	0.000648	0.0009948	0		
57446041452	574460	4145240	0.000554	0.0008612	0		
57447041452	574470	4145240	0.0004107	0.0006416	0		
57448041452	574480	4145240	0.0002971	0.0004654	0		
57449041452	574490	4145240	0.0002135	0.0003339	0		
57450041452	574500	4145240	5.124E-05	6.638E-05	0		
57451041452	574510	4145240	5.53E-05	7.088E-05	0		
57445041452	574450	4145250	6.146E-05	7.935E-05	0		
57446041452	574460	4145250	7.653E-05	9.965E-05	0		
57447041452	574470	4145250	8.216E-05	0.0001091	0		
57448041452	574480	4145250	0.0001327	0.0001837	0		
57446041452	574460	4145260	0.0001653	0.0002313	0		
57447041452	574470	4145260	0.0002136	0.0003007	0		
57448041452	574480	4145260	0.0003146	0.0004331	0		
57447041452	574470	4145270	0.0007812	0.0009404	0		
57449041451	574490	4145130	0.0005502	0.0007506	0		
57448041451	574480	4145140	0.0004212	0.0006324	0		
57449041451	574490	4145140	0.0003861	0.0005929	0		
57449041451	574490	4145150	0.0003172	0.0004909	0		
57450041451	574500	4145150	0.0002454	0.0003809	0		
57446041451	574460	4145160	0.0001885	0.000293	0		
57449041451	574490	4145160	6.971E-05	8.41E-05	0		
57450041451	574500	4145160	7.935E-05	9.565E-05	0		
57451041451	574510	4145160	7.908E-05	9.612E-05	0		
57446041451	574460	4145170	9.789E-05	0.0001193	0		
57447041451	574470	4145170	0.0001045	0.0001295	0		
57448041451	574480	4145170	0.0001135	0.0001431	0		
57449041451	574490	4145170	0.0001259	0.0001614	0		
57450041451	574500	4145170	0.0001467	0.0001903	0		
57451041451	574510	4145170	0.0001718	0.0002263	0		
57452041451	574520	4145170	0.0002093	0.0002784	0		
57446041451	574460	4145180	0.0002941	0.0003821	0		
57447041451	574470	4145180	0.0004219	0.0005574	0		
57448041451	574480	4145180	0.0003268	0.0004754	0		
57449041451	574490	4145180	0.0002866	0.0004327	0		
57450041451	574500	4145180	0.0002463	0.0003771	0		
57451041451	574510	4145180	0.0002028	0.0003119	0		
57452041451	574520	4145180	0.0001634	0.0002522	0		
57453041451	574530	4145180	0.0001556	0.0001693	0		
57445041451	574450	4145190	0.0001905	0.0002058	0		
57446041451	574460	4145190	0.0001482	0.0001646	0		
57447041451	574470	4145190	0.000191	0.0002108	0		
57448041451	574480	4145190	0.0002071	0.0002298	0		

Garvey Reservoir Rehab -Mitigated Administration Building and Water Quality Laboratory

Cancer Risk Summary & Maximum Annual GLC for Chronic Calculations

Cancer Risk Summary

Max Risk: 1.315723

XY	X	Y	Offroad Risk	Haul Risk	Total Risk
74490414519	574490	4145190	0.003879096	0.0092955	0.013175
74500414519	574500	4145190	0.004590125	0.009615708	0.014206
74510414519	574510	4145190	0.005508261	0.009997204	0.015505
74520414519	574520	4145190	0.006675589	0.010243751	0.016919
74440414520	574440	4145200	0.008155238	0.011035736	0.019191
74450414520	574450	4145200	0.009927273	0.013289749	0.023217
74460414520	574460	4145200	0.012126812	0.042387759	0.054515
74470414520	574470	4145200	0.014172405	0.014727886	0.0289
74480414520	574480	4145200	0.015459899	0.005180121	0.02064
74490414520	574490	4145200	0.015575081	0.002778235	0.018353
74500414520	574500	4145200	0.014538441	0.001747285	0.016286
74510414520	574510	4145200	0.012773605	0.001196211	0.01397
74430414521	574430	4145210	0.010888048	0.000870765	0.011759
74440414521	574440	4145210	0.001892755	0.029369766	0.031263
74450414521	574450	4145210	0.002114259	0.037825057	0.039939
74460414521	574460	4145210	0.002360683	0.037038289	0.039399
74470414521	574470	4145210	0.002679649	0.040800513	0.04348
74480414521	574480	4145210	0.003048454	0.038480544	0.041529
74490414521	574490	4145210	0.003494786	0.041806858	0.045302
74500414521	574500	4145210	0.004076788	0.040462691	0.044539
74510414521	574510	4145210	0.004849285	0.039305393	0.044155
74430414522	574430	4145220	0.005725889	0.037795379	0.043521
74440414522	574440	4145220	0.006722658	0.038210201	0.044933
74450414522	574450	4145220	0.007924873	0.039272315	0.047197
74460414522	574460	4145220	0.009334195	0.041258729	0.050593
74470414522	574470	4145220	0.010596216	0.020286548	0.030883
74480414522	574480	4145220	0.011513245	0.005429056	0.016942
74490414522	574490	4145220	0.011779604	0.002776107	0.014556
74500414522	574500	4145220	0.011244671	0.001721991	0.012967
74510414522	574510	4145220	0.010252885	0.00119032	0.011443
74520414522	574520	4145220	0.009092755	0.000880977	0.009974
74530414522	574530	4145220	0.003690817	0.000395939	0.004087
74440414523	574440	4145230	0.004038579	0.000405398	0.004444
74450414523	574450	4145230	0.00440683	0.000377862	0.004785
74460414523	574460	4145230	0.00487365	0.000388786	0.005262
74470414523	574470	4145230	0.005302261	0.000373396	0.005676
74480414523	574480	4145230	0.005906968	0.000382094	0.006289
74490414523	574490	4145230	0.006770282	0.000399325	0.00717
74500414523	574500	4145230	0.007593724	0.000402681	0.007996
74510414523	574510	4145230	0.008743332	0.000425373	0.009169
74520414523	574520	4145230	0.010090079	0.000437762	0.010528
74440414524	574440	4145240	0.011570836	0.000436553	0.012007
74450414524	574450	4145240	0.013250393	0.000433654	0.013684
74460414524	574460	4145240	0.015082234	0.000431828	0.015514
74470414524	574470	4145240	0.016961145	0.000434033	0.017395
74480414524	574480	4145240	0.018814029	0.000434563	0.019249
74490414524	574490	4145240	0.02059271	0.000428849	0.021022
74500414524	574500	4145240	0.022046332	0.000419749	0.022466
74510414524	574510	4145240	0.02313558	0.000395873	0.023531
74450414525	574450	4145250	0.023302816	0.000396032	0.023699
74460414525	574460	4145250	0.022783388	0.000394719	0.023178
74470414525	574470	4145250	0.021849193	0.000384116	0.022233
74480414525	574480	4145250	0.020562807	0.000339368	0.020902
74460414526	574460	4145260	0.018824551	0.000328068	0.019153
74470414526	574470	4145260	0.003759483	0.000422954	0.004182
74480414526	574480	4145260	0.004107245	0.000407476	0.004515
74470414527	574470	4145270	0.004491555	0.000385918	0.004877
74490414513	574490	4145130	0.004932349	0.000390589	0.005323
74480414514	574480	4145140	0.005488325	0.000400872	0.005889
74490414514	574490	4145140	0.00618994	0.000412909	0.006603
74490414515	574490	4145150	0.00712192	0.000445393	0.007567
74500414515	574500	4145150	0.008129765	0.000456222	0.008586
74460414516	574460	4145160	0.009424458	0.000476663	0.009901
74490414516	574490	4145160	0.010964467	0.000483472	0.011448
74500414516	574500	4145160	0.01279797	0.000483254	0.013281
74510414516	574510	4145160	0.015004154	0.000477307	0.015481

Max GLC for Chronic Calcs

Max GLC: 0.023949

XY	X	Y	2025	2026	2027	2034	2035
574490414519	574490	4145190	0.0002133	0.0002397	0		
574500414519	574500	4145190	0.0002272	0.0002585	0		
574510414519	574510	4145190	0.0002446	0.0002822	0		
574520414519	574520	4145190	0.0002623	0.0003079	0		
574440414520	574440	4145200	0.0002936	0.0003492	0		
574450414520	574450	4145200	0.0003547	0.0004225	0		
574460414520	574460	4145200	0.0009092	0.000992	0		
574470414520	574470	4145200	0.0004292	0.0005259	0		
574480414520	574480	4145200	0.0002701	0.0003757	0		
574490414520	574490	4145200	0.0002277	0.0003341	0		
574500414520	574500	4145200	0.0001972	0.0002964	0		
574510414520	574510	4145200	0.0001671	0.0002543	0		
574430414521	574430	4145210	0.0001397	0.000214	0		
574440414521	574440	4145210	0.0005559	0.0005688	0		
574450414521	574450	4145210	0.0007123	0.0007267	0		
574460414521	574460	4145210	0.0007008	0.0007169	0		
574470414521	574470	4145210	0.0007728	0.0007911	0		
574480414521	574480	4145210	0.0007348	0.0007556	0		
574490414521	574490	4145210	0.0008004	0.0008243	0		
574500414521	574500	4145210	0.0007826	0.0008104	0		
574510414521	574510	4145210	0.0007703	0.0008034	0		
574430414522	574430	4145220	0.0007528	0.0007919	0		
574440414522	574440	4145220	0.0007717	0.0008176	0		
574450414522	574450	4145220	0.0008047	0.0008588	0		
574460414522	574460	4145220	0.0008569	0.0009206	0		
574470414522	574470	4145220	0.0004897	0.000562	0		
574480414522	574480	4145220	0.0002298	0.0003083	0		
574490414522	574490	4145220	0.0001845	0.0002649	0		
574500414522	574500	4145220	0.0001593	0.000236	0		
574510414522	574510	4145220	0.0001383	0.0002083	0		
574520414522	574520	4145220	0.0001195	0.0001815	0		
574530414522	574530	4145220	4.919E-05	7.439E-05	0		
574440414523	574440	4145230	5.332E-05	8.089E-05	0		
574450414523	574450	4145230	5.701E-05	8.709E-05	0		
574460414523	574460	4145230	6.252E-05	9.579E-05	0		
574470414523	574470	4145230	6.711E-05	0.0001033	0		
574480414523	574480	4145230	7.415E-05	0.0001145	0		
574490414523	574490	4145230	8.429E-05	0.0001305	0		
574500414523	574500	4145230	9.372E-05	0.0001456	0		
574510414523	574510	4145230	0.0001072	0.0001669	0		
574520414523	574520	4145230	0.0001228	0.0001916	0		
574440414524	574440	4145240	0.0001396	0.0002186	0		
574450414524	574450	4145240	0.0001586	0.0002491	0		
574460414524	574460	4145240	0.0001794	0.0002824	0		
574470414524	574470	4145240	0.0002009	0.0003166	0		
574480414524	574480	4145240	0.0002219	0.0003504	0		
574490414524	574490	4145240	0.0002421	0.0003826	0		
574500414524	574500	4145240	0.0002584	0.0004089	0		
574510414524	574510	4145240	0.0002704	0.0004283	0		
574450414525	574450	4145250	0.0002723	0.0004314	0		
574460414525	574460	4145250	0.0002664	0.0004219	0		
574470414525	574470	4145250	0.0002556	0.0004047	0		
574480414525	574480	4145250	0.0002401	0.0003805	0		
574460414526	574460	4145260	0.0002201	0.0003486	0		
574470414526	574470	4145260	5.047E-05	7.613E-05	0		
574480414526	574480	4145260	5.414E-05	8.218E-05	0		
574470414527	574470	4145270	5.812E-05	8.878E-05	0		
574490414513	574490	4145130	6.322E-05	9.689E-05	0		
574480414514	574480	4145140	6.973E-05	0.0001072	0		
574490414514	574490	4145140	7.793E-05	0.0001202	0		
574490414515	574490	4145150	8.913E-05	0.0001377	0		
574500414515	574500	4145150	0.0001008	0.0001563	0		
574460414516	574460	4145160	0.0001159	0.0001802	0		
574490414516	574490	4145160	0.0001335	0.0002084	0		
574500414516	574500	4145160	0.0001544	0.0002417	0		
574510414516	574510	4145160	0.0001794	0.0002818	0		

Garvey Reservoir Rehab -Mitigated Administration Building and Water Quality Laboratory

Cancer Risk Summary & Maximum Annual GLC for Chronic Calculations

Cancer Risk Summary

Max Risk: 1.315723

XY	X	Y	Offroad Risk	Haul Risk	Total Risk
7446041451	574460	4145170	0.017561422	0.000474638	0.018036
7447041451	574470	4145170	0.020409969	0.000479084	0.020889
7448041451	574480	4145170	0.023406369	0.000482548	0.023889
7449041451	574490	4145170	0.026408861	0.00048038	0.026889
7450041451	574500	4145170	0.029059715	0.000474366	0.029534
7451041451	574510	4145170	0.031251501	0.000448107	0.0317
7452041451	574520	4145170	0.032015138	0.00043722	0.032452
7446041451	574460	4145180	0.031334011	0.000438616	0.031773
7447041451	574470	4145180	0.029615691	0.000429636	0.030045
7448041451	574480	4145180	0.026569452	0.000374391	0.026944
7449041451	574490	4145180	0.023988926	0.000363119	0.024352
7450041451	574500	4145180	0.003816521	0.000451564	0.004268
7451041451	574510	4145180	0.004188648	0.00044869	0.004637
7452041451	574520	4145180	0.004558007	0.000406916	0.004965
7453041451	574530	4145180	0.005055284	0.0004186	0.005474
7445041451	574450	4145190	0.005657776	0.000431211	0.006089
7446041451	574460	4145190	0.006519982	0.00048097	0.007001
7447041451	574470	4145190	0.007462483	0.000503854	0.007966
7448041451	574480	4145190	0.008603231	0.000517059	0.00912
7449041451	574490	4145190	0.010028058	0.000529947	0.010558
7450041451	574500	4145190	0.011806184	0.00053617	0.012342
7451041451	574510	4145190	0.014020674	0.000537786	0.014558
7452041451	574520	4145190	0.016794463	0.000532247	0.017327
7444041452	574440	4145200	0.020186803	0.000527999	0.020715
7445041452	574450	4145200	0.024401478	0.000539391	0.024941
7446041452	574460	4145200	0.029103462	0.000549307	0.029653
7447041452	574470	4145200	0.034566314	0.000542046	0.035108
7448041452	574480	4145200	0.040002586	0.000521131	0.040524
7449041452	574490	4145200	0.043767607	0.000493664	0.044261
7450041452	574500	4145200	0.044565576	0.000470643	0.045036
7451041452	574510	4145200	0.045751732	0.000489597	0.046241
7443041452	574430	4145210	0.037826305	0.0004615	0.038288
7444041452	574440	4145210	0.031102539	0.000394426	0.031497
7445041452	574450	4145210	0.003858607	0.000477495	0.004336
7446041452	574460	4145210	0.004192524	0.000424517	0.004617
7447041452	574470	4145210	0.004631657	0.000435674	0.005067
7448041452	574480	4145210	0.00518874	0.000455405	0.005644
7449041452	574490	4145210	0.054125706	0.000500699	0.054626
7450041452	574500	4145210	0.039693587	0.000435104	0.040129
7451041452	574510	4145210	0.003886848	0.000506907	0.004394
7443041452	574430	4145220	0.004231288	0.000455633	0.004687
7444041452	574440	4145220	0.004697001	0.000471954	0.005169
7445041452	574450	4145220	0.07234998	0.000532007	0.072882
7446041452	574460	4145220	0.053179882	0.000486328	0.053666
7447041452	574470	4145220	0.003874112	0.000497308	0.004371
7448041452	574480	4145220	0.004260637	0.000495156	0.004756
7449041452	574490	4145220	0.108428062	0.000611399	0.109039
7450041452	574500	4145220	0.070967239	0.00055413	0.071521
7451041452	574510	4145220	0.003876881	0.000536125	0.004413
7452041452	574520	4145220	0.004279465	0.000553965	0.004833
7453041452	574530	4145220	0.195355246	0.000816253	0.196171
7444041452	574440	4145230	0.117127093	0.000763817	0.117891
7445041452	574450	4145230	0.003873558	0.000591221	0.004465
7446041452	574460	4145230	0.004282234	0.000621398	0.004904
7447041452	574470	4145230	0.32478857	0.001098669	0.325887
7448041452	574480	4145230	0.164679103	0.001011837	0.165691
7449041452	574490	4145230	0.003879649	0.000736189	0.004616
7450041452	574500	4145230	0.004254546	0.000678123	0.004933
7451041452	574510	4145230	1.31339258	0.002330818	1.315723
7452041452	574520	4145230	0.429585067	0.0016886	0.431274
7444041452	574440	4145240	0.193039418	0.001274087	0.194314
7445041452	574450	4145240	0.003838117	0.000793136	0.004631
7446041452	574460	4145240	0.004209691	0.000742338	0.004952
7447041452	574470	4145240	0.905420805	0.013815811	0.919237
7448041452	574480	4145240	0.62837197	0.003990688	0.632363
7449041452	574490	4145240	0.356985341	0.00228659	0.359272

Max GLC for Chronic Calcs

Max GLC: 0.023949

XY	X	Y	2025	2026	2027	2034	2035
57446041451	574460	4145170	0.0002084	0.0003283	0		
57447041451	574470	4145170	0.0002409	0.0003802	0		
57448041451	574480	4145170	0.0002751	0.0004348	0		
57449041451	574490	4145170	0.0003092	0.0004894	0		
57450041451	574500	4145170	0.0003392	0.0005376	0		
57451041451	574510	4145170	0.0003637	0.000577	0		
57452041451	574520	4145170	0.0003722	0.0005907	0		
57446041451	574460	4145180	0.0003645	0.0005783	0		
57447041451	574470	4145180	0.0003447	0.0005469	0		
57448041451	574480	4145180	0.0003091	0.0004904	0		
57449041451	574490	4145180	0.0002795	0.0004433	0		
57450041451	574500	4145180	5.163E-05	7.769E-05	0		
57451041451	574510	4145180	5.582E-05	8.441E-05	0		
57452041451	574520	4145180	5.926E-05	9.037E-05	0		
57453041451	574530	4145180	6.513E-05	9.963E-05	0		
57445041451	574450	4145190	7.221E-05	0.0001108	0		
57446041451	574460	4145190	8.293E-05	0.0001274	0		
57447041451	574470	4145190	9.406E-05	0.000145	0		
57448041451	574480	4145190	0.0001073	0.000166	0		
57449041451	574490	4145190	0.0001237	0.0001922	0		
57450041451	574500	4145190	0.0001441	0.0002247	0		
57451041451	574510	4145190	0.0001693	0.000265	0		
57452041451	574520	4145190	0.0002007	0.0003154	0		
57444041452	574440	4145200	0.0002393	0.0003771	0		
57445041452	574450	4145200	0.0002874	0.000454	0		
57446041452	574460	4145200	0.0003411	0.0005397	0		
57447041452	574470	4145200	0.0004031	0.0006391	0		
57448041452	574480	4145200	0.0004646	0.0007376	0		
57449041452	574490	4145200	0.0005069	0.0008057	0		
57450041452	574500	4145200	0.0005156	0.0008198	0		
57451041452	574510	4145200	0.0005294	0.0008417	0		
57443041452	574430	4145210	0.0004387	0.0006969	0		
57444041452	574440	4145210	0.000361	0.0005733	0		
57445041452	574450	4145210	5.259E-05	7.892E-05	0		
57446041452	574460	4145210	5.542E-05	8.404E-05	0		
57447041452	574470	4145210	6.062E-05	9.223E-05	0		
57448041452	574480	4145210	6.732E-05	0.0001027	0		
57449041452	574490	4145210	0.0006249	0.0009943	0		
57450041452	574500	4145210	0.0004595	0.0007304	0		
57451041452	574510	4145210	5.344E-05	7.997E-05	0		
57443041452	574430	4145220	5.643E-05	8.531E-05	0		
57444041452	574440	4145220	6.202E-05	9.408E-05	0		
57445041452	574450	4145220	0.0008328	0.0013266	0		
57446041452	574460	4145220	0.0006138	0.0009768	0		
57447041452	574470	4145220	5.312E-05	7.957E-05	0		
57448041452	574480	4145220	5.748E-05	8.656E-05	0		
57449041452	574490	4145220	0.0012447	0.0019848	0		
57450041452	574500	4145220	0.0008174	0.0013019	0		
57451041452	574510	4145220	5.386E-05	8.032E-05	0		
57452041452	574520	4145220	5.876E-05	8.798E-05	0		
57453041452	574530	4145220	0.0022373	0.0035708	0		
57444041452	574440	4145230	0.0013464	0.0021459	0		
57445041452	574450	4145230	5.482E-05	8.127E-05	0		
57446041452	574460	4145230	6.002E-05	8.925E-05	0		
57447041452	574470	4145230	0.0037149	0.0059319	0		
57448041452	574480	4145230	0.0018919	0.003016	0		
57449041452	574490	4145230	5.753E-05	8.401E-05	0		
57450041452	574500	4145230	6.074E-05	8.978E-05	0		
57451041452	574510	4145230	0.0149842	0.0239493	0		
57452041452	574520	4145230	0.0049179	0.0078502	0		
57444041452	574440	4145240	0.0022193	0.003537	0		
57445041452	574450	4145240	5.81E-05	8.429E-05	0		
57446041452	574460	4145240	6.14E-05	9.013E-05	0		
57447041452	574470	4145240	0.0105519	0.0167322	0		
57448041452	574480	4145240	0.0072213	0.0115105	0		
57449041452	574490	4145240	0.0041028	0.0065396	0		

Garvey Reservoir Rehab -Mitigated Administration Building and Water Quality Laboratory

Cancer Risk Summary & Maximum Annual GLC for Chronic Calculations

Cancer Risk Summary

Max Risk: 1.315723

XY	X	Y	Offroad Risk	Haul Risk	Total Risk
7450041452	574500	4145240	0.191366506	0.00157437	0.192941
7451041452	574510	4145240	0.003783295	0.000858423	0.004642
7445041452	574450	4145250	0.004148777	0.000820837	0.00497
7446041452	574460	4145250	0.373846255	0.020126473	0.393973
7447041452	574470	4145250	0.308454836	0.00511808	0.313573
7448041452	574480	4145250	0.222239788	0.002759511	0.224999
7446041452	574460	4145260	0.149832217	0.0018719	0.151704
7447041452	574470	4145260	0.003712414	0.000918881	0.004631
7448041452	574480	4145260	0.004072912	0.000914523	0.004987
7447041452	574470	4145270	0.161328849	0.053319368	0.214648
7457041450	574570	4145030	0.201106608	0.014114457	0.215221
7463041450	574630	4145080	0.204869413	0.006220716	0.21109
7461041450	574610	4145090	0.172715282	0.0034294	0.176145
7462041450	574620	4145090	0.128759396	0.002225165	0.130985
7463041450	574630	4145090	0.003640978	0.001041192	0.004682
7464041450	574640	4145090	0.003985418	0.001033423	0.005019
7460041451	574600	4145100	0.004403507	0.001101632	0.005505
7461041451	574610	4145100	0.079743797	0.043318423	0.123062
7462041451	574620	4145100	0.104343521	0.031934429	0.136278
7463041451	574630	4145100	0.124656581	0.011762819	0.136419
7464041451	574640	4145100	0.130482147	0.006184959	0.136667
7465041451	574650	4145100	0.119808404	0.003719382	0.123528
7459041451	574590	4145110	0.099837568	0.002471055	0.102309
7460041451	574600	4145110	0.003554038	0.001157031	0.004711
7461041451	574610	4145110	0.00388408	0.001177732	0.005062
7462041451	574620	4145110	0.00427725	0.00123442	0.005512
7463041451	574630	4145110	0.045660916	0.010413662	0.056075
7464041451	574640	4145110	0.05847716	0.041246554	0.099724
7465041451	574650	4145110	0.072624092	0.031945081	0.104569
7466041451	574660	4145110	0.084413109	0.011323491	0.095737
7460041451	574600	4145120	0.08918819	0.006195417	0.095384
7461041451	574610	4145120	0.085609233	0.003917648	0.089527
7462041451	574620	4145120	0.075817631	0.002690922	0.078509
7463041451	574630	4145120	0.003465436	0.001313176	0.004779
7464041451	574640	4145120	0.003774435	0.001352324	0.005127
7465041451	574650	4145120	0.004140471	0.001401074	0.005542
7466041451	574660	4145120	0.028787818	0.005610188	0.034398
7460041451	574600	4145130	0.036187173	0.010924542	0.047112
7462041451	574620	4145130	0.044519614	0.041450569	0.08597
7463041451	574630	4145130	0.053227506	0.031189438	0.084417
7464041451	574640	4145130	0.060748687	0.010467064	0.071216
7465041451	574650	4145130	0.064750164	0.005727713	0.070478
7463041451	574630	4145140	0.063632121	0.00405591	0.067688
7464041451	574640	4145140	0.058676514	0.002848383	0.061525
7459041451	574590	4145150	0.003364098	0.001497869	0.004862
7460041451	574600	4145150	0.003654269	0.001561835	0.005216
7460041451	574600	4145160	0.003996493	0.001622571	0.005619
7461041451	574610	4145160	0.016340379	0.003195438	0.019536
7461041451	574610	4145170	0.019589295	0.004059546	0.023649
7457041450	574570	4145030	0.023828335	0.005871205	0.0297
7463041450	574630	4145080	0.029115091	0.010861087	0.039976
7461041450	574610	4145090	0.034899678	0.040695163	0.075595
7462041450	574620	4145090	0.040367514	0.026917918	0.067285
7463041450	574630	4145090	0.045487588	0.010310484	0.055798
7464041450	574640	4145090	0.047785143	0.005690872	0.053476
7460041451	574600	4145100	0.047210893	0.003546914	0.050758
7461041451	574610	4145100	0.045384589	0.002569542	0.047954
7462041451	574620	4145100	0.00325833	0.001741931	0.005
7463041451	574630	4145100	0.003531334	0.001836893	0.005368
7464041451	574640	4145100	0.003846424	0.001898121	0.005745
7465041451	574650	4145100	0.004164836	0.00182674	0.005992
7459041451	574590	4145110	0.012286849	0.003022684	0.01531
7460041451	574600	4145110	0.014383388	0.003536899	0.01792
7461041451	574610	4145110	0.016918506	0.004444111	0.021363
7462041451	574620	4145110	0.020106508	0.006345378	0.026452
7463041451	574630	4145110	0.023819475	0.011129042	0.034949

Max GLC for Chronic Calcs

Max GLC: 0.023949

XY	X	Y	2025	2026	2027	2034	2035
57450041452	574500	4145240	0.0022057	0.003512	0		
57451041452	574510	4145240	5.866E-05	8.448E-05	0		
57445041452	574450	4145250	6.213E-05	9.045E-05	0		
57446041452	574460	4145250	0.0046193	0.0071711	0		
57447041452	574470	4145250	0.0036023	0.0057077	0		
57448041452	574480	4145250	0.0025785	0.0040955	0		
57446041452	574460	4145260	0.0017386	0.0027614	0		
57447041452	574470	4145260	5.895E-05	8.429E-05	0		
57448041452	574480	4145260	6.297E-05	9.078E-05	0		
57447041452	574470	4145270	0.0028055	0.0039067	0		
57457041450	574570	4145030	0.0025447	0.0039174	0		
57463041450	574630	4145080	0.0024439	0.0038423	0		
57461041450	574610	4145090	0.0020273	0.0032062	0		
57462041450	574620	4145090	0.0015053	0.0023842	0		
57463041450	574630	4145090	6.037E-05	8.522E-05	0		
57464041450	574640	4145090	6.414E-05	9.135E-05	0		
57460041451	574600	4145100	7.014E-05	0.0001002	0		
57461041451	574610	4145100	0.0016954	0.0022397	0		
57462041451	574620	4145100	0.0017681	0.0024803	0		
57463041451	574630	4145100	0.0016322	0.0024831	0		
57464041451	574640	4145100	0.001597	0.0024876	0		
57465041451	574650	4145100	0.0014307	0.0022485	0		
57459041451	574590	4145110	0.0011808	0.0018622	0		
57460041451	574600	4145110	6.148E-05	8.574E-05	0		
57461041451	574610	4145110	6.562E-05	9.213E-05	0		
57462041451	574620	4145110	7.112E-05	0.0001003	0		
57463041451	574630	4145110	0.0007089	0.0010206	0		
57464041451	574640	4145110	0.0014157	0.0018149	0		
57465041451	574650	4145110	0.0014074	0.0019032	0		
57466041451	574660	4145110	0.0011664	0.0017425	0		
57460041451	574600	4145120	0.0011274	0.0017362	0		
57461041451	574610	4145120	0.0010452	0.0016296	0		
57462041451	574620	4145120	0.0009115	0.001429	0		
57463041451	574630	4145120	6.332E-05	8.697E-05	0		
57464041451	574640	4145120	6.754E-05	9.331E-05	0		
57465041451	574650	4145120	7.26E-05	0.0001009	0		
57466041451	574660	4145120	0.0004296	0.0006261	0		
57460041451	574600	4145130	0.0006105	0.0008575	0		
57462041451	574620	4145130	0.0012607	0.0015645	0		
57463041451	574630	4145130	0.001173	0.0015363	0		
57464041451	574640	4145130	0.0008816	0.0012962	0		
57465041451	574650	4145130	0.0008408	0.0012828	0		
57463041451	574630	4145140	0.0007977	0.0012321	0		
57464041451	574640	4145140	0.0007194	0.0011199	0		
57459041451	574590	4145150	6.552E-05	8.849E-05	0		
57460041451	574600	4145150	6.999E-05	9.493E-05	0		
57460041451	574600	4145160	7.499E-05	0.0001023	0		
57461041451	574610	4145160	0.000244	0.0003556	0		
57461041451	574610	4145170	0.0002967	0.0004304	0		
57457041450	574570	4145030	0.0003779	0.0005406	0		
57463041450	574630	4145080	0.0005288	0.0007276	0		
57461041450	574610	4145090	0.0011375	0.0013757	0		
57462041450	574620	4145090	0.000949	0.0012245	0		
57463041450	574630	4145090	0.0007051	0.0010156	0		
57464041450	574640	4145090	0.0006472	0.0009733	0		
57460041451	574600	4145100	0.0006016	0.0009239	0		
57461041451	574610	4145100	0.0005631	0.0008729	0		
57462041451	574620	4145100	6.876E-05	9.1E-05	0		
57463041451	574630	4145100	7.36E-05	9.77E-05	0		
57464041451	574640	4145100	7.829E-05	0.0001045	0		
57465041451	574650	4145100	8.062E-05	0.000109	0		
57459041451	574590	4145110	0.0001948	0.0002786	0		
57460041451	574600	4145110	0.000228	0.0003262	0		
57461041451	574610	4145110	0.0002733	0.0003888	0		
57462041451	574620	4145110	0.0003442	0.0004814	0		
57463041451	574630	4145110	0.0004735	0.0006361	0		

Garvey Reservoir Rehab -Mitigated Administration Building and Water Quality Laboratory

Cancer Risk Summary & Maximum Annual GLC for Chronic Calculations

Cancer Risk Summary

Max Risk: 1.315723

XY	X	Y	Offroad Risk	Haul Risk	Total Risk
74640414513	574640	4145110	0.028033042	0.037069346	0.065102
74650414513	574650	4145110	0.031879466	0.025959208	0.057839
74660414513	574660	4145110	0.035417999	0.010384754	0.045803
74600414512	574600	4145120	0.036728751	0.005561919	0.042291
74610414512	574610	4145120	0.03690817	0.003587758	0.040496
74620414512	574620	4145120	0.035732535	0.002554862	0.038287
74630414512	574630	4145120	0.003124319	0.002032839	0.005157
74640414512	574640	4145120	0.003404523	0.002205915	0.00561
74650414512	574650	4145120	0.003676973	0.002198035	0.005875
74660414512	574660	4145120	0.003852515	0.002120667	0.005973
74600414513	574600	4145130	0.004175358	0.002096494	0.006272
74620414513	574620	4145130	0.006664513	0.002583023	0.009248
74630414513	574630	4145130	0.007504015	0.002737961	0.010242
74640414513	574640	4145130	0.008463129	0.002973938	0.011437
74650414513	574650	4145130	0.009681403	0.003192455	0.012874
74630414514	574630	4145140	0.011108445	0.00351197	0.01462
74640414514	574640	4145140	0.01273761	0.003989524	0.016727
74590414515	574590	4145150	0.014808676	0.005011717	0.01982
74600414515	574600	4145150	0.017197047	0.007103889	0.024301
74600414516	574600	4145160	0.019870052	0.012424625	0.032295
74610414516	574610	4145160	0.022803324	0.03959451	0.062398
74610414517	574610	4145170	0.025839041	0.025780396	0.051619
74570414503	574570	4145030	0.028328751	0.010382363	0.038711
74630414508	574630	4145080	0.029074667	0.005399494	0.034474
74610414509	574610	4145090	0.02940637	0.003561856	0.032968
74620414509	574620	4145090	0.028932904	0.002576363	0.031509
74630414509	574630	4145090	0.002876235	0.002450264	0.005326
74640414509	574640	4145090	0.003274942	0.002774575	0.00605
74600414510	574600	4145100	0.003385141	0.0026073	0.005992
74610414510	574610	4145100	0.003789386	0.00262308	0.006412
74620414510	574620	4145100	0.00414767	0.002669906	0.006818
74630414510	574630	4145100	0.004570189	0.002725623	0.007296
74640414510	574640	4145100	0.005051408	0.002809734	0.007861
74650414510	574650	4145100	0.005585233	0.002962137	0.008547
74590414511	574590	4145110	0.006210429	0.003108496	0.009319
74600414511	574600	4145110	0.006934749	0.003333111	0.010268
74610414511	574610	4145110	0.007778127	0.003585952	0.011364
74620414511	574620	4145110	0.008797601	0.003808817	0.012606
74630414511	574630	4145110	0.009972128	0.004109344	0.014081
74640414511	574640	4145110	0.011282326	0.004560427	0.015843
74650414511	574650	4145110	0.012706046	0.005483601	0.01819
74660414511	574660	4145110	0.014726166	0.008022329	0.022748
74600414512	574600	4145120	0.01680277	0.015810234	0.032613
74610414512	574610	4145120	0.019056023	0.055073026	0.074129
74620414512	574620	4145120	0.021294879	0.023222481	0.044517
74630414512	574630	4145120	0.023167145	0.01023152	0.033399
74640414512	574640	4145120	0.02451223	0.005963954	0.030476
74650414512	574650	4145120	0.024000555	0.0035403	0.027541
74660414512	574660	4145120	0.023913061	0.00260148	0.026515
74600414513	574600	4145130	0.002712875	0.003158325	0.005871
74620414513	574620	4145130	0.003147024	0.00374652	0.006894
74630414513	574630	4145130	0.003391786	0.003888598	0.00728
74640414513	574640	4145130	0.003671435	0.003821901	0.007493
74650414513	574650	4145130	0.00398431	0.003866832	0.007851
74630414514	574630	4145140	0.004343701	0.00384101	0.008185
74640414514	574640	4145140	0.004749608	0.003905031	0.008655
74590414515	574590	4145150	0.005218644	0.003961127	0.00918
74600414515	574600	4145150	0.005761883	0.004175527	0.009937
74600414516	574600	4145160	0.006398708	0.004397965	0.010797
74610414516	574610	4145160	0.007125243	0.004587872	0.011713
74610414517	574610	4145170	0.007968067	0.004783695	0.012752
74570414503	574570	4145030	0.008947116	0.005056865	0.014004
74630414508	574630	4145080	0.010085649	0.005546939	0.015633
74610414509	574610	4145090	0.011188187	0.006477616	0.017666
74620414509	574620	4145090	0.012749239	0.00903281	0.021782
74630414509	574630	4145090	0.014421597	0.020484184	0.034906

Max GLC for Chronic Calcs

Max GLC: 0.023949

XY	X	Y	2025	2026	2027	2034	2035
57464041451	574640	4145110	0.0009934	0.0011847	0		
57465041451	574650	4145110	0.000835	0.0010526	0		
57466041451	574660	4145110	0.0005919	0.0008336	0		
57460041451	574600	4145120	0.000519	0.0007697	0		
57461041451	574610	4145120	0.0004852	0.0007371	0		
57462041451	574620	4145120	0.000453	0.0006969	0		
57463041451	574630	4145120	7.253E-05	9.386E-05	0		
57464041451	574640	4145120	7.887E-05	0.0001021	0		
57465041451	574650	4145120	8.182E-05	0.0001069	0		
57466041451	574660	4145120	8.241E-05	0.0001087	0		
57460041451	574600	4145130	8.565E-05	0.0001141	0		
57462041451	574620	4145130	0.0001228	0.0001683	0		
57463041451	574630	4145130	0.0001352	0.0001864	0		
57464041451	574640	4145130	0.0001504	0.0002082	0		
57465041451	574650	4145130	0.0001682	0.0002343	0		
57463041451	574630	4145140	0.0001903	0.0002661	0		
57464041451	574640	4145140	0.0002175	0.0003044	0		
57459041451	574590	4145150	0.0002597	0.0003607	0		
57460041451	574600	4145150	0.0003249	0.0004423	0		
57460041451	574600	4145160	0.0004521	0.0005877	0		
57461041451	574610	4145160	0.0009798	0.0011355	0		
57461041451	574610	4145170	0.000763	0.0009394	0		
57457041450	574570	4145030	0.0005112	0.0007046	0		
57463041450	574630	4145080	0.000429	0.0006275	0		
57461041450	574610	4145090	0.0003993	0.0006001	0		
57462041450	574620	4145090	0.000376	0.0005735	0		
57463041450	574630	4145090	7.73E-05	9.694E-05	0		
57464041450	574640	4145090	8.774E-05	0.0001101	0		
57460041451	574600	4145100	8.595E-05	0.0001091	0		
57461041451	574610	4145100	9.084E-05	0.0001167	0		
57462041451	574620	4145100	9.576E-05	0.0001241	0		
57463041451	574630	4145100	0.0001016	0.0001328	0		
57464041451	574640	4145100	0.0001086	0.0001431	0		
57465041451	574650	4145100	0.0001174	0.0001556	0		
57459041451	574590	4145110	0.0001272	0.0001696	0		
57460041451	574600	4145110	0.0001395	0.0001869	0		
57461041451	574610	4145110	0.0001537	0.0002068	0		
57462041451	574620	4145110	0.0001694	0.0002294	0		
57463041451	574630	4145110	0.0001882	0.0002563	0		
57464041451	574640	4145110	0.0002113	0.0002883	0		
57465041451	574650	4145110	0.0002443	0.0003311	0		
57466041451	574660	4145110	0.0003135	0.000414	0		
57460041451	574600	4145120	0.0004788	0.0005935	0		
57461041451	574610	4145120	0.0012188	0.0013489	0		
57462041451	574620	4145120	0.0006648	0.0008101	0		
57463041451	574630	4145120	0.0004497	0.0006079	0		
57464041451	574640	4145120	0.0003874	0.0005547	0		
57465041451	574650	4145120	0.0003375	0.0005013	0		
57466041451	574660	4145120	0.0003194	0.0004826	0		
57460041451	574600	4145130	8.833E-05	0.0001068	0		
57462041451	574620	4145130	0.000104	0.0001255	0		
57463041451	574630	4145130	0.0001093	0.0001325	0		
57464041451	574640	4145130	0.0001113	0.0001364	0		
57465041451	574650	4145130	0.0001157	0.0001429	0		
57463041451	574630	4145140	0.0001193	0.000149	0		
57464041451	574640	4145140	0.0001251	0.0001575	0		
57459041451	574590	4145150	0.0001314	0.0001671	0		
57460041451	574600	4145150	0.0001415	0.0001809	0		
57460041451	574600	4145160	0.0001528	0.0001965	0		
57461041451	574610	4145160	0.0001645	0.0002132	0		
57461041451	574610	4145170	0.0001777	0.0002321	0		
57457041450	574570	4145030	0.0001938	0.0002549	0		
57463041450	574630	4145080	0.0002157	0.0002845	0		
57461041450	574610	4145090	0.0002451	0.0003215	0		
57462041450	574620	4145090	0.0003094	0.0003964	0		
57463041450	574630	4145090	0.0005368	0.0006352	0		

Garvey Reservoir Rehab -Mitigated Administration Building and Water Quality Laboratory

Cancer Risk Summary & Maximum Annual GLC for Chronic Calculations

Cancer Risk Summary

Max Risk: 1.315723

XY	X	Y	Offroad Risk	Haul Risk	Total Risk
7464041450	574640	4145090	0.01611666	0.056264603	0.072381
7460041451	574600	4145100	0.017804523	0.018830994	0.036636
7461041451	574610	4145100	0.019276974	0.009533214	0.02881
7462041451	574620	4145100	0.020363453	0.005954973	0.026318
7463041451	574630	4145100	0.020950439	0.004063944	0.025014
7464041451	574640	4145100	0.020975359	0.002949548	0.023925

Max GLC for Chronic Calcs

Max GLC: 0.023949

XY	X	Y	2025	2026	2027	2034	2035
57464041450	574640	4145090	0.0012071	0.0013171	0		
57460041451	574600	4145100	0.0005452	0.0006667	0		
57461041451	574610	4145100	0.0003928	0.0005243	0		
57462041451	574620	4145100	0.00034	0.000479	0		
57463041451	574630	4145100	0.0003123	0.0004553	0		
57464041451	574640	4145100	0.0002923	0.0004355	0		

Garvey Reservoir Rehab -Mitigated Administration Building and Water Quality Laboratory

Construction Modeling Assumptions

AERMOD Sources

Volume Sources		
Offroad Construction Exhaust		
Release Height	3.66	m
Emissions rate	1	g/s
Init Vert Dimension	3.4	m
Line Volume		
Onroad Hauling Exhaust		
Plume Height	7.315	m
Plume Width (Orange)	6	m
Plume Width (Garves Avenue)	9	m
Release Height	3.66	m
Emissions rate	1	g/s

Meteorology:

SCAQMD	Pico	Rivera	2010 - 2012, 2015 - 2016

SCAQMD Met Data

https://www.aqmd.gov/home/air-quality/meteorological-data/data-for-aermod

AERMOD Sources

Garvey Reservoir Rehab -Mitigated Administration Building and Water Quality Laboratory

Health Risk Assessment Risk Factors

Residential Risk	Abbreviation	UOM	3rd Trimester	0<2	2<16	16<30
Daily Breathing Rate (95th %'ile)	DBR	L/kg-day	361	1090	572	261
Fraction Of Time At Home [a]	FAH	unitless	1	1	1	0.73
Exposure Frequency	EF	days/year	0.96	0.96	0.96	0.96
Age Sensitivity Factor	ASF	unitless	10	10	3	1
Inhalation Absorption Factor	A	unitless	1	1	1	1
Conversion Factor	CF_1	m^3/L	0.001	0.001	0.001	0.001
Conversion Factor	CF_2	$\mu g/m^3$	0.001	0.001	0.001	0.001
Cancer Potency Factor (diesel exhaust)	CPF	$mg/kg\text{-}day^{-1}$	1.1	1.1	1.1	1.1
Averaging Time (for residential exposure)	AT	years	70.00	70.00	70.00	70.00

[a] assume school or daycare will have cancer risk of >1 per million

Risk Factors

Garvey Reservoir Rehab -Mitigated Administration Building and Water Quality Laboratory

Health Risk Assessment Exposure Duration Assumptions for Offroad Equipment

Residential Receptors

			Start Date	*9/30/2025*	*12/30/2025*	*12/31/2027*
			End Date	*12/29/2025*	*12/30/2027*	*12/27/2041*
	9/30/2025	*7/31/2026*	*Days*	*90*	*730*	*5110*
Phase	Start Date	End Date	Duration (days)	3rd Tri	0<2	02<16
Demolition - 2025			1	0	0	0
Demolition - 2026			1	0	0	0
Site Preparation - 2025			1	0	0	0
Site Preparation - 2026			1	0	0	0
Grading - 2025			1	0	0	0
Grading - 2026			1	0	0	0
Infrastructure - 2025	9/30/2025	12/31/2025	93	91	2	0
Infrastructure - 2026	1/1/2026	3/31/2026	90	0	90	
Paving - 2025			1	0	0	
Architectural Coating - 2026	4/1/2026	7/31/2026	122	0	122	

Intake Factor for Inhalation, IF (m^3/kg-day)

Phase	Year	Year	Equation	3rd Trimester	0<2	0
Demolition - 2025		1900		0	0	0
Demolition - 2026		1900	$\frac{DBR \cdot FAH \cdot EF \cdot ED \cdot ASF \cdot A \cdot CF_1}{AT}$	0	0	0
Site Preparation - 2025		1900		0	0	0
Site Preparation - 2026		1900		0	0	0
Grading - 2025		1900		0	0	0
Grading - 2026		1900		0	0	
Infrastructure - 2025		2025		0.012329142	0.000818165	
Infrastructure - 2026		2026		0	0.036817414	
Paving - 2025		1900		0	0	
Architectural Coating - 2026		2026		0	0.04990805	

Risk Calculation Part 1, R1

Equation	3rd Trimester	0<2
	0	0
	0	0
	0	0
$IF \cdot CPF \cdot CF_2$	0	0
	0	0
	0	0
	1.35621E-05	8.99981E-07
	0	4.04992E-05
	0	0
	0	5.48989E-05

Exposure Durations

Garvey Reservoir Rehab -Mitigated Administration Building and Water Quality Laboratory

Offroad DPM Emissions, Ground Level Concentrations and Health Risk Calculations

Residential Receptors

Phase	Year	Emissions (lbs/day)	Work Hours Per Day	Emissions (g/s)
Demolition - 2025	1900		10	0
Demolition - 2026	1900		10	0
Site Preparation - 2025	1900		10	0
Site Preparation - 2026	1900		10	0
Grading - 2025	1900		10	0
Grading - 2026	1900		10	0
Infrastructure - 2025	2025	0.050	10	0.000629986
Infrastructure - 2026	2026	0.050	10	0.000629986
Paving - 2025	1900		10	0
Architectural Coating - 2026	2026	0.030	10	0.000377992

		AERMOD Column Identifier:	*4*	*4*	*4*	*4*	*4*	*4*	*4*	*4*	*4*	*4*				
-Mitigated Administrative Building and Water Quality Laboratory Rehabilitation			Demolition - 2025	Demolition - 2026	Site Preparation - 202	Site Preparation - 202	Grading - 2025	Grading - 2026	Infrastructure - 202	Infrastructure - 202	Paving - 2025	Architectural Coating -	Child Risk			
Unique Identifier	X (UTM)	Y (UTM)	1900	1900	1900	1900	1900	1900	2025	2026	1900	2026	3rd Trimester	0<2	Total	per million
396166.283767377.2	396166.28	3767377	0	0	0	0	0	0	2.45884E-05	2.45884E-05	0	1.4753E-05	3.33469E-10	1.82786E-09	2.16133E-09	0.0021613
396266.283767377.2	396266.28	3767377	0	0	0	0	0	0	2.72343E-05	2.72343E-05	0	1.63406E-05	3.69353E-10	2.02456E-09	2.39391E-09	0.0023939
396366.283767377.2	396366.28	3767377	0	0	0	0	0	0	3.11843E-05	3.11843E-05	0	1.87106E-05	4.22923E-10	2.31819E-09	2.74112E-09	0.0027411
396466.283767377.2	396466.28	3767377	0	0	0	0	0	0	3.53611E-05	3.53611E-05	0	2.12167E-05	4.7957E-10	2.62869E-09	3.10826E-09	0.0031083
396566.283767377.2	396566.28	3767377	0	0	0	0	0	0	4.05522E-05	4.05522E-05	0	2.43313E-05	5.49971E-10	3.01459E-09	3.56456E-09	0.0035646
396666.283767377.2	396666.28	3767377	0	0	0	0	0	0	4.52645E-05	4.52645E-05	0	2.71587E-05	6.1388E-10	3.36489E-09	3.97877E-09	0.0039788
396766.283767377.2	396766.28	3767377	0	0	0	0	0	0	4.95106E-05	4.95106E-05	0	2.97064E-05	6.71466E-10	3.68054E-09	4.35201E-09	0.004352
396866.283767377.2	396866.28	3767377	0	0	0	0	0	0	5.4141E-05	5.4141E-05	0	3.24846E-05	7.34263E-10	4.02476E-09	4.75902E-09	0.004759
396966.283767377.2	396966.28	3767377	0	0	0	0	0	0	5.98046E-05	5.98046E-05	0	3.58827E-05	8.11073E-10	4.44578E-09	5.25685E-09	0.0052569
397066.283767377.2	397066.28	3767377	0	0	0	0	0	0	6.35971E-05	6.35971E-05	0	3.81583E-05	8.62507E-10	4.72771E-09	5.59022E-09	0.0055902
397166.283767377.2	397166.28	3767377	0	0	0	0	0	0	6.48445E-05	6.48445E-05	0	3.89067E-05	8.79424E-10	4.82044E-09	5.69986E-09	0.0056999
397266.283767377.2	397266.28	3767377	0	0	0	0	0	0	6.40129E-05	6.40129E-05	0	3.84077E-05	8.68146E-10	4.75862E-09	5.62677E-09	0.0056268
397366.283767377.2	397366.28	3767377	0	0	0	0	0	0	6.40822E-05	6.40822E-05	0	3.84493E-05	8.69086E-10	4.76377E-09	5.63286E-09	0.0056329
397466.283767377.2	397466.28	3767377	0	0	0	0	0	0	6.27907E-05	6.27907E-05	0	3.76744E-05	8.51571E-10	4.66776E-09	5.51934E-09	0.0055193
397566.283767377.2	397566.28	3767377	0	0	0	0	0	0	5.94896E-05	5.94896E-05	0	3.56938E-05	8.06801E-10	4.42236E-09	5.22916E-09	0.0052292
397666.283767377.2	397666.28	3767377	0	0	0	0	0	0	5.52309E-05	5.52309E-05	0	3.31385E-05	7.49044E-10	4.10578E-09	4.85482E-09	0.0048548
397766.283767377.2	397766.28	3767377	0	0	0	0	0	0	4.93594E-05	4.93594E-05	0	2.96156E-05	6.69415E-10	3.6693E-09	4.33872E-09	0.0043387
397866.283767377.2	397866.28	3767377	0	0	0	0	0	0	4.42439E-05	4.42439E-05	0	2.65464E-05	6.00039E-10	3.28902E-09	3.88906E-09	0.0038891
396166.283767477.2	396166.28	3767477	0	0	0	0	0	0	2.59239E-05	2.59239E-05	0	1.55544E-05	3.51582E-10	1.92714E-09	2.27873E-09	0.0022787
396266.283767477.2	396266.28	3767477	0	0	0	0	0	0	2.86077E-05	2.86077E-05	0	1.71646E-05	3.87979E-10	2.12665E-09	2.51463E-09	0.0025146
396366.283767477.2	396366.28	3767477	0	0	0	0	0	0	3.32948E-05	3.32948E-05	0	1.99769E-05	4.51546E-10	2.47508E-09	2.92663E-09	0.0029266
396466.283767477.2	396466.28	3767477	0	0	0	0	0	0	3.85111E-05	3.85111E-05	0	2.31066E-05	5.22289E-10	2.86285E-09	3.38514E-09	0.0033851
396566.283767477.2	396566.28	3767477	0	0	0	0	0	0	4.454E-05	4.454E-05	0	2.6724E-05	6.04054E-10	3.31104E-09	3.91509E-09	0.0039151
396666.283767477.2	396666.28	3767477	0	0	0	0	0	0	5.10289E-05	5.10289E-05	0	3.06173E-05	6.92056E-10	3.79341E-09	4.48546E-09	0.0044855
396766.283767477.2	396766.28	3767477	0	0	0	0	0	0	5.80784E-05	5.80784E-05	0	3.48471E-05	7.87663E-10	4.31746E-09	5.10512E-09	0.0051051
396866.283767477.2	396866.28	3767477	0	0	0	0	0	0	6.57957E-05	6.57957E-05	0	3.94774E-05	8.92326E-10	4.89115E-09	5.78348E-09	0.0057835
396966.283767477.2	396966.28	3767477	0	0	0	0	0	0	7.5088E-05	7.5088E-05	0	4.50528E-05	1.01835E-09	5.58193E-09	6.60028E-09	0.0066003
397066.283767477.2	397066.28	3767477	0	0	0	0	0	0	8.24841E-05	8.24841E-05	0	4.94904E-05	1.11865E-09	6.13174E-09	7.25039E-09	0.0072504
397166.283767477.2	397166.28	3767477	0	0	0	0	0	0	8.61506E-05	8.61506E-05	0	5.16904E-05	1.16838E-09	6.4043E-09	7.57268E-09	0.0075727
397266.283767477.2	397266.28	3767477	0	0	0	0	0	0	8.6138E-05	8.6138E-05	0	5.16828E-05	1.16821E-09	6.40337E-09	7.57157E-09	0.0075716
397366.283767477.2	397366.28	3767477	0	0	0	0	0	0	8.50481E-05	8.50481E-05	0	5.10289E-05	1.15343E-09	6.32235E-09	7.47577E-09	0.0074758
397466.283767477.2	397466.28	3767477	0	0	0	0	0	0	8.2944E-05	8.2944E-05	0	4.97664E-05	1.12489E-09	6.16593E-09	7.29082E-09	0.0072908
397566.283767477.2	397566.28	3767477	0	0	0	0	0	0	7.74505E-05	7.74505E-05	0	4.64703E-05	1.05039E-09	5.75755E-09	6.80794E-09	0.0068079
397666.283767477.2	397666.28	3767477	0	0	0	0	0	0	7.00923E-05	7.00923E-05	0	4.20554E-05	9.50595E-10	5.21055E-09	6.16114E-09	0.0061611
397766.283767477.2	397766.28	3767477	0	0	0	0	0	0	6.20095E-05	6.20095E-05	0	3.72057E-05	8.40977E-10	4.60969E-09	5.45067E-09	0.0054507
397866.283767477.2	397866.28	3767477	0	0	0	0	0	0	5.4141E-05	5.4141E-05	0	3.24846E-05	7.34263E-10	4.02476E-09	4.75902E-09	0.004759
396166.283767577.2	396166.28	3767577	0	0	0	0	0	0	2.67429E-05	2.67429E-05	0	1.60457E-05	3.62689E-10	1.98803E-09	2.35072E-09	0.0023507
396266.283767577.2	396266.28	3767577	0	0	0	0	0	0	3.00692E-05	3.00692E-05	0	1.80415E-05	4.07801E-10	2.2353E-09	2.6431E-09	0.0026431
396366.283767577.2	396366.28	3767577	0	0	0	0	0	0	3.48319E-05	3.48319E-05	0	2.08992E-05	4.72393E-10	2.58935E-09	3.06174E-09	0.0030617
396466.283767577.2	396466.28	3767577	0	0	0	0	0	0	4.10184E-05	4.10184E-05	0	2.4611E-05	5.56294E-10	3.04924E-09	3.60554E-09	0.0036055
396566.283767577.2	396566.28	3767577	0	0	0	0	0	0	4.87546E-05	4.87546E-05	0	2.92528E-05	6.61213E-10	3.62434E-09	4.28556E-09	0.0042856

-Mitigated Administration Building and Water Quality Laboratory			Demolition - 2025	Demolition - 2026	ite Preparation - 202	te Preparation - 202	Grading - 2025	Grading - 2026	nfrastructure - 202	nfrastructure - 202	Paving - 2025	itectural Coating - 2	Child Risk			
Unique Identifier	X (UTM)	Y (UTM)	1900	1900	1900	1900	1900	1900	2025	2026	1900	2026	3rd Trimester	0<2	Total	per million
396666.283767577.2	396666.28	3767577	0	0	0	0	0	0	5.81477E-05	5.81477E-05	0	3.48886E-05	7.88603E-10	4.32261E-09	5.11121E-09	0.0051112
396766.283767577.2	396766.28	3767577	0	0	0	0	0	0	6.69486E-05	6.69486E-05	0	4.01692E-05	9.07961E-10	4.97686E-09	5.88482E-09	0.0058848
396866.283767577.2	396866.28	3767577	0	0	0	0	0	0	8.06634E-05	8.06634E-05	0	4.83981E-05	1.09396E-09	5.99639E-09	7.09036E-09	0.0070904
396966.283767577.2	396966.28	3767577	0	0	0	0	0	0	9.52728E-05	9.52728E-05	0	5.71637E-05	1.2921E-09	7.08243E-09	8.37453E-09	0.0083745
397066.283767577.2	397066.28	3767577	0	0	0	0	0	0	0.000109271	0.000109271	0	6.55627E-05	1.48194E-09	8.12304E-09	9.60498E-09	0.009605
397166.283767577.2	397166.28	3767577	0	0	0	0	0	0	0.00011954	0.00011954	0	7.17239E-05	1.62121E-09	8.88641E-09	1.05076E-08	0.0105076
397266.283767577.2	397266.28	3767577	0	0	0	0	0	0	0.000122463	0.000122463	0	7.34778E-05	1.66085E-09	9.10371E-09	1.07646E-08	0.0107646
397366.283767577.2	397366.28	3767577	0	0	0	0	0	0	0.000120271	0.000120271	0	7.21624E-05	1.63112E-09	8.94073E-09	1.05719E-08	0.0105719
397466.283767577.2	397466.28	3767577	0	0	0	0	0	0	0.000116037	0.000116037	0	6.96223E-05	1.5737E-09	8.62602E-09	1.01997E-08	0.0101997
397566.283767577.2	397566.28	3767577	0	0	0	0	0	0	0.000105365	0.000105365	0	6.32191E-05	1.42897E-09	7.83268E-09	9.26165E-09	0.0092617
397666.283767577.2	397666.28	3767577	0	0	0	0	0	0	9.21418E-05	9.21418E-05	0	5.52851E-05	1.24963E-09	6.84968E-09	8.09931E-09	0.0080993
397766.283767577.2	397766.28	3767577	0	0	0	0	0	0	7.84774E-05	7.84774E-05	0	4.70864E-05	1.06431E-09	5.83389E-09	6.8982E-09	0.0068982
397866.283767577.2	397866.28	3767577	0	0	0	0	0	0	6.60792E-05	6.60792E-05	0	3.96475E-05	8.9617E-10	4.91223E-09	5.8084E-09	0.0058084
396166.283767677.2	396166.28	3767677	0	0	0	0	0	0	2.77131E-05	2.77131E-05	0	1.66279E-05	3.75846E-10	2.06015E-09	2.43599E-09	0.002436
396266.283767677.2	396266.28	3767677	0	0	0	0	0	0	3.14237E-05	3.14237E-05	0	1.88542E-05	4.2617E-10	2.33599E-09	2.76216E-09	0.0027622
396366.283767677.2	396366.28	3767677	0	0	0	0	0	0	3.6766E-05	3.6766E-05	0	2.20596E-05	4.98622E-10	2.73313E-09	3.23175E-09	0.0032317
396466.283767677.2	396466.28	3767677	0	0	0	0	0	0	4.3847E-05	4.3847E-05	0	2.63082E-05	5.94656E-10	3.25952E-09	3.85418E-09	0.0038542
396566.283767677.2	396566.28	3767677	0	0	0	0	0	0	5.25975E-05	5.25975E-05	0	3.15585E-05	7.13331E-10	3.91002E-09	4.62335E-09	0.0046234
396666.283767677.2	396666.28	3767677	0	0	0	0	0	0	6.24505E-05	6.24505E-05	0	3.74703E-05	8.46958E-10	4.64248E-09	5.48943E-09	0.0054894
396766.283767677.2	396766.28	3767677	0	0	0	0	0	0	7.77781E-05	7.77781E-05	0	4.66669E-05	1.05483E-09	5.7819E-09	6.83673E-09	0.0068367
396866.283767677.2	396866.28	3767677	0	0	0	0	0	0	9.94874E-05	9.94874E-05	0	5.96924E-05	1.34925E-09	7.39574E-09	8.74499E-09	0.008745
396966.283767677.2	396966.28	3767677	0	0	0	0	0	0	0.000125859	0.000125859	0	7.55152E-05	1.7069E-09	9.35614E-09	1.1063E-08	0.011063
397066.283767677.2	397066.28	3767677	0	0	0	0	0	0	0.00015211	0.00015211	0	9.12661E-05	2.06293E-09	1.13076E-08	1.33706E-08	0.0133706
397166.283767677.2	397166.28	3767677	0	0	0	0	0	0	0.000175615	0.000175615	0	0.000105369	2.3817E-09	1.30549E-08	1.54366E-08	0.0154366
397266.283767677.2	397266.28	3767677	0	0	0	0	0	0	0.000190571	0.000190571	0	0.000114342	2.58453E-09	1.41667E-08	1.67513E-08	0.0167513
397366.283767677.2	397366.28	3767677	0	0	0	0	0	0	0.000186715	0.000186715	0	0.000112029	2.53224E-09	1.38801E-08	1.64124E-08	0.0164124
397466.283767677.2	397466.28	3767677	0	0	0	0	0	0	0.000175363	0.000175363	0	0.000105218	2.37828E-09	1.30362E-08	1.54145E-08	0.0154145
397566.283767677.2	397566.28	3767677	0	0	0	0	0	0	0.000151902	0.000151902	0	9.11414E-05	2.06011E-09	1.12922E-08	1.33523E-08	0.0133523
397666.283767677.2	397666.28	3767677	0	0	0	0	0	0	0.000125279	0.000125279	0	7.51674E-05	1.69904E-09	9.31305E-09	1.10121E-08	0.0110121
397766.283767677.2	397766.28	3767677	0	0	0	0	0	0	0.000100924	0.000100924	0	6.05543E-05	1.36873E-09	7.50252E-09	8.87125E-09	0.0088713
397866.283767677.2	397866.28	3767677	0	0	0	0	0	0	8.08209E-05	8.08209E-05	0	4.84926E-05	1.0961E-09	6.0081E-09	7.1042E-09	0.0071042
396166.283767777.2	396166.28	3767777	0	0	0	0	0	0	2.83494E-05	2.83494E-05	0	1.70096E-05	3.84476E-10	2.10745E-09	2.49192E-09	0.0024919
396266.283767777.2	396266.28	3767777	0	0	0	0	0	0	3.28412E-05	3.28412E-05	0	1.97047E-05	4.45394E-10	2.44136E-09	2.88676E-09	0.0028868
396366.283767777.2	396366.28	3767777	0	0	0	0	0	0	3.83473E-05	3.83473E-05	0	2.30084E-05	5.20068E-10	2.85068E-09	3.37074E-09	0.0033707
396466.283767777.2	396466.28	3767777	0	0	0	0	0	0	4.58E-05	4.58E-05	0	2.748E-05	6.21142E-10	3.4047E-09	4.02584E-09	0.0040258
396566.283767777.2	396566.28	3767777	0	0	0	0	0	0	5.49978E-05	5.49978E-05	0	3.29987E-05	7.45883E-10	4.08845E-09	4.83433E-09	0.0048343
396666.283767777.2	396666.28	3767777	0	0	0	0	0	0	6.81771E-05	6.81771E-05	0	4.09063E-05	9.24622E-10	5.06818E-09	5.9928E-09	0.0059928
396766.283767777.2	396766.28	3767777	0	0	0	0	0	0	8.91052E-05	8.91052E-05	0	5.34631E-05	1.20845E-09	6.62395E-09	7.8324E-09	0.0078324
396866.283767777.2	396866.28	3767777	0	0	0	0	0	0	0.000119338	0.000119338	0	7.1603E-05	1.61847E-09	8.87142E-09	1.04899E-08	0.0104899
396966.283767777.2	396966.28	3767777	0	0	0	0	0	0	0.00016161	0.00016161	0	9.69662E-05	2.19177E-09	1.20139E-08	1.42056E-08	0.0142056
397066.283767777.2	397066.28	3767777	0	0	0	0	0	0	0.000217131	0.000217131	0	0.000130279	2.94474E-09	1.61412E-08	1.90859E-08	0.0190859
397166.283767777.2	397166.28	3767777	0	0	0	0	0	0	0.000278025	0.000278025	0	0.000166815	3.7706E-09	2.0668E-08	2.44386E-08	0.0244386
397266.283767777.2	397266.28	3767777	0	0	0	0	0	0	0.000327832	0.000327832	0	0.000196699	4.44608E-09	2.43705E-08	2.88166E-08	0.0288166
397366.283767777.2	397366.28	3767777	0	0	0	0	0	0	0.000331738	0.000331738	0	0.000199043	4.49905E-09	2.46609E-08	2.91599E-08	0.0291599
397466.283767777.2	397466.28	3767777	0	0	0	0	0	0	0.000288376	0.000288376	0	0.000173026	3.91097E-09	2.14374E-08	2.53484E-08	0.0253484
397566.283767777.2	397566.28	3767777	0	0	0	0	0	0	0.000229712	0.000229712	0	0.000137827	3.11536E-09	1.70764E-08	2.01918E-08	0.0201918
397666.283767777.2	397666.28	3767777	0	0	0	0	0	0	0.000176245	0.000176245	0	0.000105747	2.39024E-09	1.31018E-08	1.5492E-08	0.015492
397766.283767777.2	397766.28	3767777	0	0	0	0	0	0	0.000131106	0.000131106	0	7.86638E-05	1.77807E-09	9.74625E-09	1.15243E-08	0.0115243
397866.283767777.2	397866.28	3767777	0	0	0	0	0	0	9.91598E-05	9.91598E-05	0	5.94959E-05	1.34481E-09	7.37139E-09	8.7162E-09	0.0087162
396166.283767877.2	396166.28	3767877	0	0	0	0	0	0	2.874E-05	2.874E-05	0	1.7244E-05	3.89773E-10	2.13648E-09	2.52626E-09	0.0025263
396266.283767877.2	396266.28	3767877	0	0	0	0	0	0	3.3446E-05	3.3446E-05	0	2.00676E-05	4.53596E-10	2.48632E-09	2.93992E-09	0.0029399
396366.283767877.2	396366.28	3767877	0	0	0	0	0	0	3.94371E-05	3.94371E-05	0	2.36623E-05	5.34849E-10	2.9317E-09	3.46654E-09	0.0034665
396466.283767877.2	396466.28	3767877	0	0	0	0	0	0	4.71104E-05	4.71104E-05	0	2.82662E-05	6.38913E-10	3.50211E-09	4.14102E-09	0.004141
396566.283767877.2	396566.28	3767877	0	0	0	0	0	0	5.73665E-05	5.73665E-05	0	3.44199E-05	7.78008E-10	4.26454E-09	5.04255E-09	0.0050425
397466.283767877.2	397466.28	3767877	0	0	0	0	0	0	0.000590108	0.000590108	0	0.000354065	8.00308E-09	4.38677E-08	5.18708E-08	0.0518708
397566.283767877.2	397566.28	3767877	0	0	0	0	0	0	0.000370867	0.000370867	0	0.00022252	5.02971E-09	2.75696E-08	3.25994E-08	0.0325994
397666.283767877.2	397666.28	3767877	0	0	0	0	0	0	0.000222265	0.000222265	0	0.000133359	3.01438E-09	1.65229E-08	1.95372E-08	0.0195372
397766.283767877.2	397766.28	3767877	0	0	0	0	0	0	0.000151562	0.000151562	0	9.09372E-05	2.05549E-09	1.12669E-08	1.33224E-08	0.0133224
397866.283767877.2	397866.28	3767877	0	0	0	0	0	0	0.000119376	0.000119376	0	7.16256E-05	1.61899E-09	8.87423E-09	1.04932E-08	0.0104932
396166.283767977.2	396166.28	3767977	0	0	0	0	0	0	2.87337E-05	2.87337E-05	0	1.72402E-05	3.89688E-10	2.13602E-09	2.5257E-09	0.0025257
396266.283767977.2	396266.28	3767977	0	0	0	0	0	0	3.36035E-05	3.36035E-05	0	2.01621E-05	4.55732E-10	2.49803E-09	2.95376E-09	0.0029538
396366.283767977.2	396366.28	3767977	0	0	0	0	0	0	3.97647E-05	3.97647E-05	0	2.38588E-05	5.39291E-10	2.95605E-09	3.49534E-09	0.0034953
396466.283767977.2	396466.28	3767977	0	0	0	0	0	0	4.75703E-05	4.75703E-05	0	2.85422E-05	6.4515E-10	3.5363E-09	4.18145E-09	0.0041814
397466.283767977.2	397466.28	3767977	0	0	0	0	0	0	0.00122388	0.00122388	0	0.000734328	1.65983E-08	9.09814E-08	1.0758E-07	0.1075797
397566.283767977.2	397566.28	3767977	0	0	0	0	0	0	0.000547483	0.000547483	0	0.00032849	7.425E-09	4.0699E-08	4.8124E-08	0.048124
397666.283767977.2	397666.28	3767977	0	0	0	0	0	0	0.000289787	0.000289787	0	0.000173872	3.93011E-09	2.15423E-08	2.54725E-08	0.0254725
397766.283767977.2	397766.28	3767977	0	0	0	0	0	0	0.000211404	0.000211404	0	0.000126843	2.86708E-09	1.57155E-08	1.85826E-08	0.0185826
397866.283767977.2	397866.28	3767977	0	0	0	0	0	0	0.000137784	0.000137784	0	8.26706E-05	1.86864E-09	1.02427E-08	1.21113E-08	0.0121113
396166.283768077.2	396166.28	3768077	0	0	0	0	0	0	2.89479E-05	2.89479E-05	0	1.73687E-05	3.92593E-10	2.15194E-09	2.54453E-09	0.0025445

-Mitigated Administration Building and Water Quality Laboratory			Demolition - 2025	Demolition - 2026	ite Preparation - 202	te Preparation - 202	Grading - 2025	Grading - 2026	nfrastructure - 202	nfrastructure - 202	Paving - 2025	itectural Coating - 2	Child Risk			
Unique Identifier	X (UTM)	Y (UTM)	1900	1900	1900	1900	1900	1900	2025	2026	1900	2026	3rd Trimester	0<2	Total	per million
396266.283768077.2	396266.28	3768077	0	0	0	0	0	0	3.34397E-05	3.34397E-05	0	2.00638E-05	4.53511E-10	2.48585E-09	2.93936E-09	0.0029394
396366.283768077.2	396366.28	3768077	0	0	0	0	0	0	3.95757E-05	3.95757E-05	0	2.37454E-05	5.36728E-10	2.942E-09	3.47873E-09	0.0034787
396466.283768077.2	396466.28	3768077	0	0	0	0	0	0	4.78915E-05	4.78915E-05	0	2.87349E-05	6.49508E-10	3.56018E-09	4.20969E-09	0.0042097
397466.283768077.2	397466.28	3768077	0	0	0	0	0	0	0.003905171	0.003905171	0	0.002343102	5.29621E-08	2.90304E-07	3.43266E-07	0.3432665
397566.283768077.2	397566.28	3768077	0	0	0	0	0	0	0.001095792	0.001095792	0	0.000657475	1.48612E-08	8.14594E-08	9.63206E-08	0.0963206
397666.283768077.2	397666.28	3768077	0	0	0	0	0	0	0.000468206	0.000468206	0	0.000280923	6.34983E-09	3.48057E-08	4.11555E-08	0.0411555
397766.283768077.2	397766.28	3768077	0	0	0	0	0	0	0.00025648	0.00025648	0	0.000153888	3.4784E-09	1.90663E-08	2.25447E-08	0.0225447
397866.283768077.2	397866.28	3768077	0	0	0	0	0	0	0.000160067	0.000160067	0	9.60401E-05	2.17084E-09	1.18991E-08	1.407E-08	0.01407
396166.283768177.2	396166.28	3768177	0	0	0	0	0	0	2.86833E-05	2.86833E-05	0	1.721E-05	3.89004E-10	2.13227E-09	2.52127E-09	0.0025213
396266.283768177.2	396266.28	3768177	0	0	0	0	0	0	3.32381E-05	3.32381E-05	0	1.99428E-05	4.50777E-10	2.47087E-09	2.92164E-09	0.0029216
396366.283768177.2	396366.28	3768177	0	0	0	0	0	0	3.92796E-05	3.92796E-05	0	2.35678E-05	5.32713E-10	2.91999E-09	3.4527E-09	0.0034527
396466.283768177.2	396466.28	3768177	0	0	0	0	0	0	4.72112E-05	4.72112E-05	0	2.83267E-05	6.4028E-10	3.5096E-09	4.14988E-09	0.0041499
397466.283768177.2	397466.28	3768177	0	0	0	0	0	0	0.004923203	0.004923203	0	0.002953922	6.67688E-08	3.65983E-07	4.32752E-07	0.432752
397566.283768177.2	397566.28	3768177	0	0	0	0	0	0	0.0013669	0.0013669	0	0.00082014	1.8538E-08	1.01613E-07	1.20151E-07	0.1201512
397666.283768177.2	397666.28	3768177	0	0	0	0	0	0	0.000565047	0.000565047	0	0.000339028	7.6632E-09	4.20047E-08	4.96679E-08	0.0496679
397766.283768177.2	397766.28	3768177	0	0	0	0	0	0	0.000304233	0.000304233	0	0.00018254	4.12602E-09	2.26162E-08	2.67422E-08	0.0267422
397866.283768177.2	397866.28	3768177	0	0	0	0	0	0	0.000180674	0.000180674	0	0.000108404	2.45031E-09	1.3431E-08	1.58813E-08	0.0158813
396166.283768277.2	396166.28	3768277	0	0	0	0	0	0	2.70516E-05	2.70516E-05	0	1.6231E-05	3.66875E-10	2.01097E-09	2.37785E-09	0.0023778
396266.283768277.2	396266.28	3768277	0	0	0	0	0	0	3.2438E-05	3.2438E-05	0	1.94628E-05	4.39926E-10	2.41139E-09	2.85132E-09	0.0028513
396366.283768277.2	396366.28	3768277	0	0	0	0	0	0	3.82087E-05	3.82087E-05	0	2.29252E-05	5.18188E-10	2.84037E-09	3.35856E-09	0.0033586
396466.283768277.2	396466.28	3768277	0	0	0	0	0	0	4.57811E-05	4.57811E-05	0	2.74687E-05	6.20886E-10	3.4033E-09	4.02418E-09	0.0040242
397366.283768277.2	397366.28	3768277	0	0	0	0	0	0	0.00253948	0.00253948	0	0.001523688	3.44406E-08	1.88781E-07	2.23222E-07	0.2232216
397466.283768277.2	397466.28	3768277	0	0	0	0	0	0	0.002193971	0.002193971	0	0.001316382	2.97548E-08	1.63096E-07	1.92851E-07	0.1928511
397566.283768277.2	397566.28	3768277	0	0	0	0	0	0	0.001162935	0.001162935	0	0.000697761	1.57718E-08	8.64508E-08	1.02223E-07	0.1022226
397666.283768277.2	397666.28	3768277	0	0	0	0	0	0	0.000574339	0.000574339	0	0.000344604	7.78922E-09	4.26955E-08	5.04847E-08	0.0504847
397766.283768277.2	397766.28	3768277	0	0	0	0	0	0	0.000321306	0.000321306	0	0.000192783	4.35756E-09	2.38854E-08	2.82429E-08	0.0282429
397866.283768277.2	397866.28	3768277	0	0	0	0	0	0	0.000204059	0.000204059	0	0.000122435	2.76746E-09	1.51694E-08	1.79369E-08	0.0179369
396166.283768377.2	396166.28	3768377	0	0	0	0	0	0	2.51427E-05	2.51427E-05	0	1.50856E-05	3.40987E-10	1.86907E-09	2.21006E-09	0.0022101
396266.283768377.2	396266.28	3768377	0	0	0	0	0	0	3.14552E-05	3.14552E-05	0	1.88731E-05	4.26597E-10	2.33833E-09	2.76493E-09	0.0027649
396366.283768377.2	396366.28	3768377	0	0	0	0	0	0	3.67849E-05	3.67849E-05	0	2.20709E-05	4.98879E-10	2.73453E-09	3.23341E-09	0.0032334
396466.283768377.2	396466.28	3768377	0	0	0	0	0	0	4.3784E-05	4.3784E-05	0	2.62704E-05	5.93802E-10	3.25484E-09	3.84864E-09	0.0038486
397266.283768377.2	397266.28	3768377	0	0	0	0	0	0	0.000682105	0.000682105	0	0.000409263	9.25074E-09	5.07066E-08	5.99574E-08	0.0599574
397366.283768377.2	397366.28	3768377	0	0	0	0	0	0	0.001024786	0.001024786	0	0.000614871	1.38982E-08	7.6181E-08	9.00792E-08	0.0900792
397466.283768377.2	397466.28	3768377	0	0	0	0	0	0	0.001065937	0.001065937	0	0.000639562	1.44563E-08	7.92401E-08	9.36964E-08	0.0936964
397566.283768377.2	397566.28	3768377	0	0	0	0	0	0	0.00079256	0.00079256	0	0.000475536	1.07487E-08	5.89177E-08	6.96665E-08	0.0696665
397666.283768377.2	397666.28	3768377	0	0	0	0	0	0	0.000509602	0.000509602	0	0.000305761	6.91125E-09	3.7883E-08	4.47943E-08	0.0447943
397766.283768377.2	397766.28	3768377	0	0	0	0	0	0	0.000321545	0.000321545	0	0.000192927	4.36081E-09	2.39032E-08	2.8264E-08	0.028264
397866.283768377.2	397866.28	3768377	0	0	0	0	0	0	0.00021555	0.00021555	0	0.00012933	2.9233E-09	1.60236E-08	1.89469E-08	0.0189469
396166.283768477.2	396166.28	3768477	0	0	0	0	0	0	2.416E-05	2.416E-05	0	1.4496E-05	3.27659E-10	1.79601E-09	2.12367E-09	0.0021237
396266.283768477.2	396266.28	3768477	0	0	0	0	0	0	2.99369E-05	2.99369E-05	0	1.79622E-05	4.06006E-10	2.22547E-09	2.63147E-09	0.0026315
396366.283768477.2	396366.28	3768477	0	0	0	0	0	0	3.35279E-05	3.35279E-05	0	2.01167E-05	4.54707E-10	2.49241E-09	2.94712E-09	0.0029471
396466.283768477.2	396466.28	3768477	0	0	0	0	0	0	4.1283E-05	4.1283E-05	0	2.47698E-05	5.59882E-10	3.06891E-09	3.6288E-09	0.0036288
397166.283768477.2	397166.28	3768477	0	0	0	0	0	0	0.000272608	0.000272608	0	0.000163565	3.69712E-09	2.02652E-08	2.39623E-08	0.0239623
397266.283768477.2	397266.28	3768477	0	0	0	0	0	0	0.000406681	0.000406681	0	0.000244009	5.51543E-09	3.02321E-08	3.57475E-08	0.0357475
397366.283768477.2	397366.28	3768477	0	0	0	0	0	0	0.000542487	0.000542487	0	0.000325492	7.35724E-09	4.03277E-08	4.76849E-08	0.0476849
397466.283768477.2	397466.28	3768477	0	0	0	0	0	0	0.000577968	0.000577968	0	0.000346781	7.83844E-09	4.29653E-08	5.08037E-08	0.0508037
397566.283768477.2	397566.28	3768477	0	0	0	0	0	0	0.000512091	0.000512091	0	0.000307254	6.945E-09	3.8068E-08	4.5013E-08	0.045013
397666.283768477.2	397666.28	3768477	0	0	0	0	0	0	0.000384751	0.000384751	0	0.000230851	5.21802E-09	2.86018E-08	3.38198E-08	0.0338198
397766.283768477.2	397766.28	3768477	0	0	0	0	0	0	0.000280621	0.000280621	0	0.000168373	3.8058E-09	2.08609E-08	2.46667E-08	0.0246667
397866.283768477.2	397866.28	3768477	0	0	0	0	0	0	0.000200695	0.000200695	0	0.000120417	2.72183E-09	1.49193E-08	1.76412E-08	0.0176412
396166.283768577.2	396166.28	3768577	0	0	0	0	0	0	2.52246E-05	2.52246E-05	0	1.51348E-05	3.42098E-10	1.87516E-09	2.21726E-09	0.0022173
396266.283768577.2	396266.28	3768577	0	0	0	0	0	0	2.5968E-05	2.5968E-05	0	1.55808E-05	3.5218E-10	1.93042E-09	2.2826E-09	0.0022826
396366.283768577.2	396366.28	3768577	0	0	0	0	0	0	2.98172E-05	2.98172E-05	0	1.78903E-05	4.04383E-10	2.21657E-09	2.62095E-09	0.002621
396466.283768577.2	396466.28	3768577	0	0	0	0	0	0	3.853E-05	3.853E-05	0	2.3118E-05	5.22545E-10	2.86426E-09	3.3868E-09	0.0033868
396566.283768577.2	396566.28	3768577	0	0	0	0	0	0	4.49432E-05	4.49432E-05	0	2.69659E-05	6.09522E-10	3.34101E-09	3.95053E-09	0.0039505
396866.283768577.2	396866.28	3768577	0	0	0	0	0	0	8.50733E-05	8.50733E-05	0	5.1044E-05	1.15377E-09	6.32422E-09	7.47799E-09	0.007478
396966.283768577.2	396966.28	3768577	0	0	0	0	0	0	0.000109996	0.000109996	0	6.59973E-05	1.49177E-09	8.1769E-09	9.66867E-09	0.0096687
397066.283768577.2	397066.28	3768577	0	0	0	0	0	0	0.000145212	0.000145212	0	8.71271E-05	1.96937E-09	1.07948E-08	1.27642E-08	0.0127642
397166.283768577.2	397166.28	3768577	0	0	0	0	0	0	0.00019757	0.00019757	0	0.000118542	2.67945E-09	1.4687E-08	1.73665E-08	0.0173665
397266.283768577.2	397266.28	3768577	0	0	0	0	0	0	0.000265325	0.000265325	0	0.000159195	3.59835E-09	1.97238E-08	2.33222E-08	0.0233222
397366.283768577.2	397366.28	3768577	0	0	0	0	0	0	0.000334107	0.000334107	0	0.000200464	4.53118E-09	2.4837E-08	2.93682E-08	0.0293682
397466.283768577.2	397466.28	3768577	0	0	0	0	0	0	0.000351986	0.000351986	0	0.000211192	4.77365E-09	2.61661E-08	3.09397E-08	0.0309397
397566.283768577.2	397566.28	3768577	0	0	0	0	0	0	0.000344659	0.000344659	0	0.000206795	4.67429E-09	2.56214E-08	3.02957E-08	0.0302957
397666.283768577.2	397666.28	3768577	0	0	0	0	0	0	0.000289605	0.000289605	0	0.000173763	3.92763E-09	2.15288E-08	2.54564E-08	0.0254564
397766.283768577.2	397766.28	3768577	0	0	0	0	0	0	0.000225793	0.000225793	0	0.000135476	3.06222E-09	1.67851E-08	1.98473E-08	0.0198473
397866.283768577.2	397866.28	3768577	0	0	0	0	0	0	0.000174179	0.000174179	0	0.000104507	2.36222E-09	1.29482E-08	1.53104E-08	0.0153104
396166.283768677.2	396166.28	3768677	0	0	0	0	0	0	2.39962E-05	2.39962E-05	0	1.43977E-05	3.25437E-10	1.78384E-09	2.10928E-09	0.0021093
396266.283768677.2	396266.28	3768677	0	0	0	0	0	0	2.7165E-05	2.7165E-05	0	1.6299E-05	3.68413E-10	2.0194E-09	2.38782E-09	0.0023878
396366.283768677.2	396366.28	3768677	0	0	0	0	0	0	2.84061E-05	2.84061E-05	0	1.70436E-05	3.85245E-10	2.11166E-09	2.49691E-09	0.0024969

-Mitigated Administration Building and Water Quality Laboratory			Demolition - 2025	Demolition - 2026	ite Preparation - 202	te Preparation - 202	Grading - 2025	Grading - 2026	nfrastructure - 202	nfrastructure - 202	Paving - 2025	itectural Coating - 2	Child Risk			
Unique Identifier	X (UTM)	Y (UTM)	1900	1900	1900	1900	1900	1900	2025	2026	1900	2026	3rd Trimester	0<2	Total	per million
396466.283768677.2	396466.28	3768677	0	0	0	0	0	0	3.56824E-05	3.56824E-05	0	2.14094E-05	4.83927E-10	2.65258E-09	3.1365E-09	0.0031365
396566.283768677.2	396566.28	3768677	0	0	0	0	0	0	4.16421E-05	4.16421E-05	0	2.49852E-05	5.64752E-10	3.09561E-09	3.66036E-09	0.0036604
396666.283768677.2	396666.28	3768677	0	0	0	0	0	0	4.92964E-05	4.92964E-05	0	2.95778E-05	6.68561E-10	3.66462E-09	4.33318E-09	0.0043332
396766.283768677.2	396766.28	3768677	0	0	0	0	0	0	5.92502E-05	5.92502E-05	0	3.55501E-05	8.03554E-10	4.40457E-09	5.20812E-09	0.0052081
396866.283768677.2	396866.28	3768677	0	0	0	0	0	0	7.27004E-05	7.27004E-05	0	4.36202E-05	9.85967E-10	5.40443E-09	6.3904E-09	0.0063904
396966.283768677.2	396966.28	3768677	0	0	0	0	0	0	9.07999E-05	9.07999E-05	0	5.44799E-05	1.23143E-09	6.74992E-09	7.98136E-09	0.0079814
397066.283768677.2	397066.28	3768677	0	0	0	0	0	0	0.000115306	0.000115306	0	6.91838E-05	1.56379E-09	8.5717E-09	1.01355E-08	0.0101355
397166.283768677.2	397166.28	3768677	0	0	0	0	0	0	0.000146636	0.000146636	0	8.79813E-05	1.98868E-09	1.09007E-08	1.28893E-08	0.0128893
397366.283768677.2	397366.28	3768677	0	0	0	0	0	0	0.000225781	0.000225781	0	0.000135468	3.06205E-09	1.67842E-08	1.98462E-08	0.0198462
397466.283768677.2	397466.28	3768677	0	0	0	0	0	0	0.000247774	0.000247774	0	0.000148664	3.36032E-09	1.84191E-08	2.17794E-08	0.0217794
397566.283768677.2	397566.28	3768677	0	0	0	0	0	0	0.000243521	0.000243521	0	0.000146113	3.30265E-09	1.8103E-08	2.14056E-08	0.0214056
397666.283768677.2	397666.28	3768677	0	0	0	0	0	0	0.00021807	0.00021807	0	0.000130842	2.95747E-09	1.6211E-08	1.91684E-08	0.0191684
397766.283768677.2	397766.28	3768677	0	0	0	0	0	0	0.000181934	0.000181934	0	0.00010916	2.4674E-09	1.35247E-08	1.59921E-08	0.0159921
397866.283768677.2	397866.28	3768677	0	0	0	0	0	0	0.000148066	0.000148066	0	8.88394E-05	2.00807E-09	1.1007E-08	1.3015E-08	0.013015
396166.283768777.2	396166.28	3768777	0	0	0	0	0	0	2.28496E-05	2.28496E-05	0	1.37098E-05	3.09888E-10	1.6986E-09	2.00849E-09	0.0020085
396266.283768777.2	396266.28	3768777	0	0	0	0	0	0	2.55648E-05	2.55648E-05	0	1.53389E-05	3.46712E-10	1.90045E-09	2.24716E-09	0.0022472
396366.283768777.2	396366.28	3768777	0	0	0	0	0	0	2.73351E-05	2.73351E-05	0	1.64011E-05	3.7072E-10	2.03205E-09	2.40277E-09	0.0024028
396466.283768777.2	396466.28	3768777	0	0	0	0	0	0	3.29798E-05	3.29798E-05	0	1.97879E-05	4.47274E-10	2.45167E-09	2.89894E-09	0.0028989
396566.283768777.2	396566.28	3768777	0	0	0	0	0	0	3.78685E-05	3.78685E-05	0	2.27211E-05	5.13574E-10	2.81508E-09	3.32866E-09	0.0033287
396666.283768777.2	396666.28	3768777	0	0	0	0	0	0	4.41305E-05	4.41305E-05	0	2.64783E-05	5.98501E-10	3.28059E-09	3.8791E-09	0.0038791
396766.283768777.2	396766.28	3768777	0	0	0	0	0	0	5.22195E-05	5.22195E-05	0	3.13317E-05	7.08204E-10	3.88192E-09	4.59012E-09	0.0045901
396866.283768777.2	396866.28	3768777	0	0	0	0	0	0	6.26647E-05	6.26647E-05	0	3.75988E-05	8.49862E-10	4.6584E-09	5.50826E-09	0.0055083
396966.283768777.2	396966.28	3768777	0	0	0	0	0	0	7.59448E-05	7.59448E-05	0	4.55669E-05	1.02997E-09	5.64562E-09	6.67559E-09	0.0066756
397066.283768777.2	397066.28	3768777	0	0	0	0	0	0	9.27781E-05	9.27781E-05	0	5.56668E-05	1.25826E-09	6.89698E-09	8.15524E-09	0.0081552
397166.283768777.2	397166.28	3768777	0	0	0	0	0	0	0.000112938	0.000112938	0	6.77626E-05	1.53167E-09	8.39561E-09	9.92727E-09	0.0099273
397266.283768777.2	397266.28	3768777	0	0	0	0	0	0	0.000137961	0.000137961	0	8.27764E-05	1.87103E-09	1.02558E-08	1.21268E-08	0.0121268
397366.283768777.2	397366.28	3768777	0	0	0	0	0	0	0.000161232	0.000161232	0	9.67394E-05	2.18664E-09	1.19858E-08	1.41724E-08	0.0141724
397466.283768777.2	397466.28	3768777	0	0	0	0	0	0	0.00017588	0.00017588	0	0.000105528	2.38529E-09	1.30746E-08	1.54599E-08	0.0154599
397566.283768777.2	397566.28	3768777	0	0	0	0	0	0	0.00017719	0.00017719	0	0.000106314	2.40306E-09	1.3172E-08	1.55751E-08	0.0155751
397666.283768777.2	397666.28	3768777	0	0	0	0	0	0	0.000165397	0.000165397	0	9.92379E-05	2.24312E-09	1.22953E-08	1.45384E-08	0.0145384
397766.283768777.2	397766.28	3768777	0	0	0	0	0	0	0.000145319	0.000145319	0	8.71913E-05	1.97082E-09	1.08028E-08	1.27736E-08	0.0127736
397866.283768777.2	397866.28	3768777	0	0	0	0	0	0	0.000123868	0.000123868	0	7.43207E-05	1.6799E-09	9.20815E-09	1.0888E-08	0.010888
396166.283768877.2	396166.28	3768877	0	0	0	0	0	0	2.15329E-05	2.15329E-05	0	1.29198E-05	2.92031E-10	1.60072E-09	1.89276E-09	0.0018928
396266.283768877.2	396266.28	3768877	0	0	0	0	0	0	2.40529E-05	2.40529E-05	0	1.44317E-05	3.26206E-10	1.78805E-09	2.11426E-09	0.0021143
396366.283768877.2	396366.28	3768877	0	0	0	0	0	0	2.68563E-05	2.68563E-05	0	1.61138E-05	3.64227E-10	1.99646E-09	2.36068E-09	0.0023607
396466.283768877.2	396466.28	3768877	0	0	0	0	0	0	3.0485E-05	3.0485E-05	0	1.8291E-05	4.1344E-10	2.26621E-09	2.67965E-09	0.0026796
396566.283768877.2	396566.28	3768877	0	0	0	0	0	0	3.46807E-05	3.46807E-05	0	2.08084E-05	4.70342E-10	2.57811E-09	3.04845E-09	0.0030485
396666.283768877.2	396666.28	3768877	0	0	0	0	0	0	3.97584E-05	3.97584E-05	0	2.38551E-05	5.39206E-10	2.95558E-09	3.49479E-09	0.0034948
396766.283768877.2	396766.28	3768877	0	0	0	0	0	0	4.63796E-05	4.63796E-05	0	2.78277E-05	6.29002E-10	3.44779E-09	4.07679E-09	0.0040768
396866.283768877.2	396866.28	3768877	0	0	0	0	0	0	5.51679E-05	5.51679E-05	0	3.31007E-05	7.4819E-10	4.10109E-09	4.84928E-09	0.0048493
396966.283768877.2	396966.28	3768877	0	0	0	0	0	0	6.51406E-05	6.51406E-05	0	3.90843E-05	8.8344E-10	4.84245E-09	5.72589E-09	0.0057259
397066.283768877.2	397066.28	3768877	0	0	0	0	0	0	7.64803E-05	7.64803E-05	0	4.58882E-05	1.03723E-09	5.68543E-09	6.72266E-09	0.0067227
397166.283768877.2	397166.28	3768877	0	0	0	0	0	0	9.01573E-05	9.01573E-05	0	5.40944E-05	1.22272E-09	6.70215E-09	7.92487E-09	0.0079249
397266.283768877.2	397266.28	3768877	0	0	0	0	0	0	0.00010619	0.00010619	0	6.37143E-05	1.44016E-09	7.89403E-09	9.3342E-09	0.0093342
397366.283768877.2	397366.28	3768877	0	0	0	0	0	0	0.000120548	0.000120548	0	7.23287E-05	1.63488E-09	8.96134E-09	1.05962E-08	0.0105962
397466.283768877.2	397466.28	3768877	0	0	0	0	0	0	0.00013098	0.00013098	0	7.85882E-05	1.77636E-09	9.73688E-09	1.15132E-08	0.0115132
397566.283768877.2	397566.28	3768877	0	0	0	0	0	0	0.000134011	0.000134011	0	8.04064E-05	1.81746E-09	9.96214E-09	1.17796E-08	0.0117796
397666.283768877.2	397666.28	3768877	0	0	0	0	0	0	0.000127925	0.000127925	0	7.6755E-05	1.73493E-09	9.50974E-09	1.12447E-08	0.0112447
397766.283768877.2	397766.28	3768877	0	0	0	0	0	0	0.000116642	0.000116642	0	6.99852E-05	1.5819E-09	8.67098E-09	1.02529E-08	0.0102529
397866.283768877.2	397866.28	3768877	0	0	0	0	0	0	0.000103444	0.000103444	0	6.20662E-05	1.40291E-09	7.68985E-09	9.09276E-09	0.0090928
3964253767739	396425	3767739	0	0	0	0	0	0	4.19886E-05	4.19886E-05	0	2.51931E-05	5.69451E-10	3.12137E-09	3.69082E-09	0.0036908
3964753767739	396475	3767739	0	0	0	0	0	0	4.59449E-05	4.59449E-05	0	2.75669E-05	6.23107E-10	3.41547E-09	4.03858E-09	0.0040386
3965253767739	396525	3767739	0	0	0	0	0	0	5.01343E-05	5.01343E-05	0	3.00806E-05	6.79924E-10	3.72691E-09	4.40683E-09	0.0044068
3965753767739	396575	3767739	0	0	0	0	0	0	5.54451E-05	5.54451E-05	0	3.3267E-05	7.51949E-10	4.1217E-09	4.87365E-09	0.0048737
3966253767739	396625	3767739	0	0	0	0	0	0	6.03212E-05	6.03212E-05	0	3.61927E-05	8.18079E-10	4.48418E-09	5.30226E-09	0.0053023
3966753767739	396675	3767739	0	0	0	0	0	0	6.72006E-05	6.72006E-05	0	4.03204E-05	9.11379E-10	4.99559E-09	5.90697E-09	0.005907
3967253767739	396725	3767739	0	0	0	0	0	0	7.70221E-05	7.70221E-05	0	4.62133E-05	1.04458E-09	5.7257E-09	6.77028E-09	0.0067703
3967753767739	396775	3767739	0	0	0	0	0	0	8.639E-05	8.639E-05	0	5.1834E-05	1.17163E-09	6.4221E-09	7.59372E-09	0.0075937
3968253767739	396825	3767739	0	0	0	0	0	0	9.94685E-05	9.94685E-05	0	5.96811E-05	1.349E-09	7.39433E-09	8.74333E-09	0.0087433
3968753767739	396875	3767739	0	0	0	0	0	0	0.00011479	0.00011479	0	6.88739E-05	1.55679E-09	8.53329E-09	1.00901E-08	0.0100901
3969253767739	396925	3767739	0	0	0	0	0	0	0.000131636	0.000131636	0	7.89814E-05	1.78525E-09	9.78559E-09	1.15708E-08	0.0115708
3969753767739	396975	3767739	0	0	0	0	0	0	0.000150743	0.000150743	0	9.04458E-05	2.04439E-09	1.1206E-08	1.32504E-08	0.0132504
3970253767739	397025	3767739	0	0	0	0	0	0	0.000171583	0.000171583	0	0.00010295	2.32702E-09	1.27552E-08	1.50822E-08	0.0150822
3970753767739	397075	3767739	0	0	0	0	0	0	0.000192958	0.000192958	0	0.000115775	2.61691E-09	1.43442E-08	1.69611E-08	0.0169611
3971253767739	397125	3767739	0	0	0	0	0	0	0.000214038	0.000214038	0	0.000128423	2.90279E-09	1.59112E-08	1.8814E-08	0.018814
3971753767739	397175	3767739	0	0	0	0	0	0	0.000234273	0.000234273	0	0.000140564	3.17722E-09	1.74155E-08	2.05927E-08	0.0205927
3972253767739	397225	3767739	0	0	0	0	0	0	0.00025081	0.00025081	0	0.000150486	3.4015E-09	1.86448E-08	2.20463E-08	0.0220463
3972753767739	397275	3767739	0	0	0	0	0	0	0.000263202	0.000263202	0	0.000157921	3.56956E-09	1.9566E-08	2.31356E-08	0.0231356
3973253767739	397325	3767739	0	0	0	0	0	0	0.000265104	0.000265104	0	0.000159063	3.59536E-09	1.97075E-08	2.33028E-08	0.0233028

-Mitigated Administration Building and Water Quality Laboratory			Demolition - 2025	Demolition - 2026	ite Preparation - 202	te Preparation - 202	Grading - 2025	Grading - 2026	nfrastructure - 202	nfrastructure - 202	Paving - 2025	itectural Coating - 2	Child Risk			
Unique Identifier	X (UTM)	Y (UTM)	1900	1900	1900	1900	1900	1900	2025	2026	1900	2026	3rd Trimester	0<2	Total	per million
3973753767739	397375	3767739	0	0	0	0	0	0	0.000259195	0.000259195	0	0.000155517	3.51522E-09	1.92682E-08	2.27834E-08	0.0227834
3974253767739	397425	3767739	0	0	0	0	0	0	0.000248567	0.000248567	0	0.00014914	3.37108E-09	1.84781E-08	2.18492E-08	0.0218492
3974753767739	397475	3767739	0	0	0	0	0	0	0.000233933	0.000233933	0	0.00014036	3.17261E-09	1.73902E-08	2.05628E-08	0.0205628
3975253767739	397525	3767739	0	0	0	0	0	0	0.000214157	0.000214157	0	0.000128494	2.90442E-09	1.59201E-08	1.88246E-08	0.0188246
3964253767789	396425	3767789	0	0	0	0	0	0	4.27698E-05	4.27698E-05	0	2.56619E-05	5.80046E-10	3.17944E-09	3.75948E-09	0.0037595
3964753767789	396475	3767789	0	0	0	0	0	0	4.67261E-05	4.67261E-05	0	2.80356E-05	6.33702E-10	3.47354E-09	4.10725E-09	0.0041072
3965253767789	396525	3767789	0	0	0	0	0	0	5.10982E-05	5.10982E-05	0	3.06589E-05	6.92996E-10	3.79856E-09	4.49156E-09	0.0044916
3965753767789	396575	3767789	0	0	0	0	0	0	5.61129E-05	5.61129E-05	0	3.36677E-05	7.61006E-10	4.17134E-09	4.93235E-09	0.0049323
3966253767789	396625	3767789	0	0	0	0	0	0	6.24379E-05	6.24379E-05	0	3.74628E-05	8.46787E-10	4.64154E-09	5.48833E-09	0.0054883
3966753767789	396675	3767789	0	0	0	0	0	0	7.04198E-05	7.04198E-05	0	4.22519E-05	9.55038E-10	5.2349E-09	6.18994E-09	0.0061899
3967253767789	396725	3767789	0	0	0	0	0	0	8.10225E-05	8.10225E-05	0	4.86135E-05	1.09883E-09	6.02309E-09	7.12192E-09	0.0071219
3967753767789	396775	3767789	0	0	0	0	0	0	9.24883E-05	9.24883E-05	0	5.5493E-05	1.25433E-09	6.87543E-09	8.12976E-09	0.0081298
3968253767789	396825	3767789	0	0	0	0	0	0	0.000107217	0.000107217	0	6.43304E-05	1.45409E-09	7.97037E-09	9.42446E-09	0.0094245
3968753767789	396875	3767789	0	0	0	0	0	0	0.000124737	0.000124737	0	7.48424E-05	1.69169E-09	9.27277E-09	1.09645E-08	0.0109645
3969253767789	396925	3767789	0	0	0	0	0	0	0.000145596	0.000145596	0	8.73577E-05	1.97458E-09	1.08234E-08	1.2798E-08	0.012798
3969753767789	396975	3767789	0	0	0	0	0	0	0.000170695	0.000170695	0	0.000102417	2.31497E-09	1.26892E-08	1.50042E-08	0.0150042
3970253767789	397025	3767789	0	0	0	0	0	0	0.000199787	0.000199787	0	0.000119872	2.70953E-09	1.48519E-08	1.75614E-08	0.0175614
3970753767789	397075	3767789	0	0	0	0	0	0	0.000232194	0.000232194	0	0.000139316	3.14903E-09	1.72609E-08	2.041E-08	0.02041
3971253767789	397125	3767789	0	0	0	0	0	0	0.000266283	0.000266283	0	0.00015977	3.61134E-09	1.9795E-08	2.34064E-08	0.0234064
3971753767789	397175	3767789	0	0	0	0	0	0	0.00030044	0.00030044	0	0.000180264	4.07459E-09	2.23343E-08	2.64089E-08	0.0264089
3972253767789	397225	3767789	0	0	0	0	0	0	0.000330598	0.000330598	0	0.000198359	4.48359E-09	2.45761E-08	2.90597E-08	0.0290597
3972753767789	397275	3767789	0	0	0	0	0	0	0.000355533	0.000355533	0	0.00021332	4.82175E-09	2.64297E-08	3.12515E-08	0.0312515
3973253767789	397325	3767789	0	0	0	0	0	0	0.00036422	0.00036422	0	0.000218532	4.93957E-09	2.70756E-08	3.20151E-08	0.0320151
3973753767789	397375	3767789	0	0	0	0	0	0	0.000356471	0.000356471	0	0.000213883	4.83448E-09	2.64995E-08	3.1334E-08	0.031334
3974253767789	397425	3767789	0	0	0	0	0	0	0.000336923	0.000336923	0	0.000202154	4.56937E-09	2.50463E-08	2.96157E-08	0.0296157
3974753767789	397475	3767789	0	0	0	0	0	0	0.000302267	0.000302267	0	0.00018136	4.09937E-09	2.24701E-08	2.65695E-08	0.0265695
3975253767789	397525	3767789	0	0	0	0	0	0	0.00027291	0.00027291	0	0.000163746	3.70122E-09	2.02877E-08	2.39889E-08	0.0239889
3964253767839	396425	3767839	0	0	0	0	0	0	4.34186E-05	4.34186E-05	0	2.60512E-05	5.88846E-10	3.22767E-09	3.81652E-09	0.0038165
3964753767839	396475	3767839	0	0	0	0	0	0	4.76521E-05	4.76521E-05	0	2.85913E-05	6.46261E-10	3.54239E-09	4.18865E-09	0.0041886
3965253767839	396525	3767839	0	0	0	0	0	0	5.18542E-05	5.18542E-05	0	3.11125E-05	7.03249E-10	3.85476E-09	4.55801E-09	0.004558
3965753767839	396575	3767839	0	0	0	0	0	0	5.75114E-05	5.75114E-05	0	3.45069E-05	7.79973E-10	4.27531E-09	5.05528E-09	0.0050553
3966253767839	396625	3767839	0	0	0	0	0	0	6.43657E-05	6.43657E-05	0	3.86194E-05	8.72931E-10	4.78484E-09	5.65778E-09	0.0056578
3966753767839	396675	3767839	0	0	0	0	0	0	7.41746E-05	7.41746E-05	0	4.45047E-05	1.00596E-09	5.51402E-09	6.51998E-09	0.00652
3967253767839	396725	3767839	0	0	0	0	0	0	8.48969E-05	8.48969E-05	0	5.09382E-05	1.15138E-09	6.31111E-09	7.46248E-09	0.0074625
3967753767839	396775	3767839	0	0	0	0	0	0	9.78746E-05	9.78746E-05	0	5.87248E-05	1.32738E-09	7.27585E-09	8.60323E-09	0.0086032
3968253767839	396825	3767839	0	0	0	0	0	0	0.000114084	0.000114084	0	6.84505E-05	1.54722E-09	8.48084E-09	1.00281E-08	0.0100281
3968753767839	396875	3767839	0	0	0	0	0	0	0.000134313	0.000134313	0	8.05878E-05	1.82156E-09	9.98462E-09	1.18062E-08	0.0118062
3969253767839	396925	3767839	0	0	0	0	0	0	0.000159506	0.000159506	0	9.57037E-05	2.16323E-09	1.18574E-08	1.40207E-08	0.0140207
3969753767839	396975	3767839	0	0	0	0	0	0	0.000191062	0.000191062	0	0.000114637	2.5912E-09	1.42033E-08	1.67945E-08	0.0167945
3970253767839	397025	3767839	0	0	0	0	0	0	0.000229655	0.000229655	0	0.000137793	3.1146E-09	1.70722E-08	2.01868E-08	0.0201868
3970753767839	397075	3767839	0	0	0	0	0	0	0.000277603	0.000277603	0	0.000166562	3.76487E-09	2.06366E-08	2.44015E-08	0.0244015
3971253767839	397125	3767839	0	0	0	0	0	0	0.000331096	0.000331096	0	0.000198657	4.49034E-09	2.46131E-08	2.91035E-08	0.0291035
3971753767839	397175	3767839	0	0	0	0	0	0	0.000393244	0.000393244	0	0.000235946	5.33319E-09	2.92331E-08	3.45663E-08	0.0345663
3972253767839	397225	3767839	0	0	0	0	0	0	0.000455089	0.000455089	0	0.000273054	6.17195E-09	3.38306E-08	4.00026E-08	0.0400026
3972753767839	397275	3767839	0	0	0	0	0	0	0.000497922	0.000497922	0	0.000298753	6.75285E-09	3.70148E-08	4.37676E-08	0.0437676
3973253767839	397325	3767839	0	0	0	0	0	0	0.000507	0.000507	0	0.0003042	6.87597E-09	3.76896E-08	4.45656E-08	0.0445656
3973753767839	397375	3767839	0	0	0	0	0	0	0.000520495	0.000520495	0	0.000312297	7.05898E-09	3.86928E-08	4.57517E-08	0.0457517
3974753767839	397475	3767839	0	0	0	0	0	0	0.000430331	0.000430331	0	0.000258199	5.83617E-09	3.19901E-08	3.78263E-08	0.0378263
3975253767839	397525	3767839	0	0	0	0	0	0	0.000353838	0.000353838	0	0.000212303	4.79877E-09	2.63038E-08	3.11025E-08	0.0311025
3964253767889	396425	3767889	0	0	0	0	0	0	4.38974E-05	4.38974E-05	0	2.63385E-05	5.95339E-10	3.26327E-09	3.85861E-09	0.0038586
3964753767889	396475	3767889	0	0	0	0	0	0	4.76962E-05	4.76962E-05	0	2.86177E-05	6.46859E-10	3.54567E-09	4.19252E-09	0.0041925
3965253767889	396525	3767889	0	0	0	0	0	0	5.2692E-05	5.2692E-05	0	3.16152E-05	7.14612E-10	3.91704E-09	4.63166E-09	0.0046317
3965753767889	396575	3767889	0	0	0	0	0	0	5.90297E-05	5.90297E-05	0	3.54178E-05	8.00564E-10	4.38818E-09	5.18874E-09	0.0051887
3974753767889	397475	3767889	0	0	0	0	0	0	0.000615761	0.000615761	0	0.000369457	8.35099E-09	4.57747E-08	5.41257E-08	0.0541257
3975253767889	397525	3767889	0	0	0	0	0	0	0.000451574	0.000451574	0	0.000270944	6.12427E-09	3.35693E-08	3.96936E-08	0.0396936
3964253767939	396425	3767939	0	0	0	0	0	0	4.42187E-05	4.42187E-05	0	2.65312E-05	5.99697E-10	3.28715E-09	3.88685E-09	0.0038868
3964753767939	396475	3767939	0	0	0	0	0	0	4.81372E-05	4.81372E-05	0	2.88823E-05	6.5284E-10	3.57845E-09	4.23129E-09	0.0042313
3965253767939	396525	3767939	0	0	0	0	0	0	5.34354E-05	5.34354E-05	0	3.20613E-05	7.24694E-10	3.97231E-09	4.697E-09	0.004697
3974753767939	397475	3767939	0	0	0	0	0	0	0.000823089	0.000823089	0	0.000493854	1.11628E-08	6.11872E-08	7.235E-08	0.07235
3975253767939	397525	3767939	0	0	0	0	0	0	0.000605001	0.000605001	0	0.000363001	8.20506E-09	4.49748E-08	5.31799E-08	0.0531799
3964253767989	396425	3767989	0	0	0	0	0	0	4.40738E-05	4.40738E-05	0	2.64443E-05	5.97732E-10	3.27638E-09	3.87411E-09	0.0038741
3964753767989	396475	3767989	0	0	0	0	0	0	4.84711E-05	4.84711E-05	0	2.90827E-05	6.57368E-10	3.60327E-09	4.26064E-09	0.0042606
3974753767989	397475	3767989	0	0	0	0	0	0	0.001233532	0.001233532	0	0.000740119	1.67292E-08	9.16988E-08	1.08428E-07	0.1084281
3975253767989	397525	3767989	0	0	0	0	0	0	0.000807359	0.000807359	0	0.000484415	1.09494E-08	6.00178E-08	7.09672E-08	0.0709672
3964253768039	396425	3768039	0	0	0	0	0	0	4.41053E-05	4.41053E-05	0	2.64632E-05	5.98159E-10	3.27872E-09	3.87688E-09	0.0038769
3964753768039	396475	3768039	0	0	0	0	0	0	4.86853E-05	4.86853E-05	0	2.92112E-05	6.60273E-10	3.61919E-09	4.27946E-09	0.0042795
3974753768039	397475	3768039	0	0	0	0	0	0	0.002222459	0.002222459	0	0.001333475	3.01411E-08	1.65214E-07	1.95355E-07	0.1953552
3975253768039	397525	3768039	0	0	0	0	0	0	0.001332496	0.001332496	0	0.000799498	1.80714E-08	9.90557E-08	1.17127E-07	0.1171271
3964253768089	396425	3768089	0	0	0	0	0	0	4.40675E-05	4.40675E-05	0	2.64405E-05	5.97646E-10	3.27591E-09	3.87356E-09	0.0038736

-Mitigated Administration Building and Water Quality Laboratory			Demolition - 2025	Demolition - 2026	ite Preparation - 202	te Preparation - 202	Grading - 2025	Grading - 2026	nfrastructure - 202	nfrastructure - 202	Paving - 2025	itectural Coating - 2	Child Risk			
Unique Identifier	X (UTM)	Y (UTM)	1900	1900	1900	1900	1900	1900	2025	2026	1900	2026	3rd Trimester	0<2	Total	per million
3964753768089	396475	3768089	0	0	0	0	0	0	4.87168E-05	4.87168E-05	0	2.92301E-05	6.607E-10	3.62153E-09	4.28223E-09	0.0042822
3974753768089	397475	3768089	0	0	0	0	0	0	0.003694957	0.003694957	0	0.002216974	5.01112E-08	2.74677E-07	3.24789E-07	0.3247886
3975253768089	397525	3768089	0	0	0	0	0	0	0.001873472	0.001873472	0	0.001124083	2.54081E-08	1.39271E-07	1.64679E-07	0.1646791
3964253768139	396425	3768139	0	0	0	0	0	0	4.41368E-05	4.41368E-05	0	2.64821E-05	5.98586E-10	3.28106E-09	3.87965E-09	0.0038796
3964753768139	396475	3768139	0	0	0	0	0	0	4.84018E-05	4.84018E-05	0	2.90411E-05	6.56428E-10	3.59812E-09	4.25455E-09	0.0042545
3974253768139	397425	3768139	0	0	0	0	0	0	0.014941809	0.014941809	0	0.008965085	2.02642E-07	1.11075E-06	1.31339E-06	1.3133926
3974753768139	397475	3768139	0	0	0	0	0	0	0.004887174	0.004887174	0	0.002932304	6.62801E-08	3.63305E-07	4.29585E-07	0.4295851
3975253768139	397525	3768139	0	0	0	0	0	0	0.002196113	0.002196113	0	0.001317668	2.97838E-08	1.63256E-07	1.93039E-07	0.1930394
3964253768189	396425	3768189	0	0	0	0	0	0	4.36643E-05	4.36643E-05	0	2.61986E-05	5.92178E-10	3.24594E-09	3.83812E-09	0.0038381
3964753768189	396475	3768189	0	0	0	0	0	0	4.78915E-05	4.78915E-05	0	2.87349E-05	6.49508E-10	3.56018E-09	4.20969E-09	0.0042097
3973753768189	397375	3768189	0	0	0	0	0	0	0.010300519	0.010300519	0	0.006180311	1.39696E-07	7.65725E-07	9.05421E-07	0.9054208
3974253768189	397425	3768189	0	0	0	0	0	0	0.007148673	0.007148673	0	0.004289204	9.69507E-08	5.31421E-07	6.28372E-07	0.628372
3974753768189	397475	3768189	0	0	0	0	0	0	0.004061243	0.004061243	0	0.002436746	5.50788E-08	3.01907E-07	3.56985E-07	0.3569853
3975253768189	397525	3768189	0	0	0	0	0	0	0.002177081	0.002177081	0	0.001306248	2.95257E-08	1.61841E-07	1.91367E-07	0.1913665
3964253768239	396425	3768239	0	0	0	0	0	0	4.30407E-05	4.30407E-05	0	2.58244E-05	5.8372E-10	3.19958E-09	3.7833E-09	0.0037833
3964753768239	396475	3768239	0	0	0	0	0	0	4.71986E-05	4.71986E-05	0	2.83191E-05	6.4011E-10	3.50867E-09	4.14878E-09	0.0041488
3973753768239	397375	3768239	0	0	0	0	0	0	0.004253061	0.004253061	0	0.002551837	5.76803E-08	3.16166E-07	3.73846E-07	0.3738463
3974253768239	397425	3768239	0	0	0	0	0	0	0.003509136	0.003509136	0	0.002105482	4.75911E-08	2.60864E-07	3.08455E-07	0.3084548
3974753768239	397475	3768239	0	0	0	0	0	0	0.002528311	0.002528311	0	0.001516986	3.42891E-08	1.87951E-07	2.2224E-07	0.2222398
3975253768239	397525	3768239	0	0	0	0	0	0	0.001704566	0.001704566	0	0.00102274	2.31174E-08	1.26715E-07	1.49832E-07	0.1498322
3964253768289	396425	3768289	0	0	0	0	0	0	4.22343E-05	4.22343E-05	0	2.53406E-05	5.72784E-10	3.13963E-09	3.71241E-09	0.0037124
3964753768289	396475	3768289	0	0	0	0	0	0	4.63355E-05	4.63355E-05	0	2.78013E-05	6.28404E-10	3.44451E-09	4.07291E-09	0.0040729
3973253768289	397325	3768289	0	0	0	0	0	0	0.001835357	0.001835357	0	0.001101214	2.48912E-08	1.36438E-07	1.61329E-07	0.1613288
3973753768289	397375	3768289	0	0	0	0	0	0	0.002287889	0.002287889	0	0.001372733	3.10285E-08	1.70078E-07	2.01107E-07	0.2011066
3974253768289	397425	3768289	0	0	0	0	0	0	0.002330697	0.002330697	0	0.001398418	3.1609E-08	1.7326E-07	2.04869E-07	0.2048694
3974753768289	397475	3768289	0	0	0	0	0	0	0.001964895	0.001964895	0	0.001178937	2.6648E-08	1.46067E-07	1.72715E-07	0.1727153
3975253768289	397525	3768289	0	0	0	0	0	0	0.001464831	0.001464831	0	0.000878899	1.98661E-08	1.08893E-07	1.28759E-07	0.1287594
3964253768339	396425	3768339	0	0	0	0	0	0	4.14216E-05	4.14216E-05	0	2.4853E-05	5.61762E-10	3.07922E-09	3.64098E-09	0.003641
3964753768339	396475	3768339	0	0	0	0	0	0	4.53401E-05	4.53401E-05	0	2.72041E-05	6.14905E-10	3.37051E-09	3.98542E-09	0.0039854
3965253768339	396525	3768339	0	0	0	0	0	0	5.00965E-05	5.00965E-05	0	3.00579E-05	6.79412E-10	3.7241E-09	4.40351E-09	0.0044035
3972753768339	397275	3768339	0	0	0	0	0	0	0.000907205	0.000907205	0	0.000544323	1.23036E-08	6.74402E-08	7.97438E-08	0.0797438
3973253768339	397325	3768339	0	0	0	0	0	0	0.001187064	0.001187064	0	0.000712238	1.6099E-08	8.82445E-08	1.04344E-07	0.1043435
3973753768339	397375	3768339	0	0	0	0	0	0	0.001418155	0.001418155	0	0.000850893	1.92331E-08	1.05423E-07	1.24657E-07	0.1246566
3974253768339	397425	3768339	0	0	0	0	0	0	0.00148443	0.00148443	0	0.000890658	2.01319E-08	1.1035E-07	1.30482E-07	0.1304821
3974753768339	397475	3768339	0	0	0	0	0	0	0.001363	0.001363	0	0.0008178	1.84851E-08	1.01323E-07	1.19808E-07	0.1198084
3975253768339	397525	3768339	0	0	0	0	0	0	0.001135802	0.001135802	0	0.000681481	1.54038E-08	8.44338E-08	9.98376E-08	0.0998376
3964253768389	396425	3768389	0	0	0	0	0	0	4.04325E-05	4.04325E-05	0	2.42595E-05	5.48348E-10	3.00569E-09	3.55404E-09	0.003554
3964753768389	396475	3768389	0	0	0	0	0	0	4.41872E-05	4.41872E-05	0	2.65123E-05	5.9927E-10	3.28481E-09	3.88408E-09	0.0038841
3965253768389	396525	3768389	0	0	0	0	0	0	4.86601E-05	4.86601E-05	0	2.91961E-05	6.59931E-10	3.61732E-09	4.27725E-09	0.0042772
3972253768389	397225	3768389	0	0	0	0	0	0	0.000519461	0.000519461	0	0.000311677	7.04496E-09	3.8616E-08	4.56609E-08	0.0456609
3972753768389	397275	3768389	0	0	0	0	0	0	0.000665265	0.000665265	0	0.000399159	9.02237E-09	4.94548E-08	5.84772E-08	0.0584772
3973253768389	397325	3768389	0	0	0	0	0	0	0.000826208	0.000826208	0	0.000495725	1.12051E-08	6.1419E-08	7.26241E-08	0.0726241
3973753768389	397375	3768389	0	0	0	0	0	0	0.000960326	0.000960326	0	0.000576195	1.3024E-08	7.13891E-08	8.44131E-08	0.0844131
3974253768389	397425	3768389	0	0	0	0	0	0	0.001014649	0.001014649	0	0.00060879	1.37607E-08	7.54275E-08	8.91882E-08	0.0891882
3974753768389	397475	3768389	0	0	0	0	0	0	0.000973933	0.000973933	0	0.00058436	1.32085E-08	7.24007E-08	8.56092E-08	0.0856092
3975253768389	397525	3768389	0	0	0	0	0	0	0.000862539	0.000862539	0	0.000517524	1.16978E-08	6.41198E-08	7.58176E-08	0.0758176
3964253768439	396425	3768439	0	0	0	0	0	0	3.94245E-05	3.94245E-05	0	2.36547E-05	5.34678E-10	2.93076E-09	3.46544E-09	0.0034654
3964753768439	396475	3768439	0	0	0	0	0	0	4.29399E-05	4.29399E-05	0	2.57639E-05	5.82353E-10	3.19208E-09	3.77443E-09	0.0037744
3965253768439	396525	3768439	0	0	0	0	0	0	4.71041E-05	4.71041E-05	0	2.82624E-05	6.38828E-10	3.50164E-09	4.14047E-09	0.0041405
3971753768439	397175	3768439	0	0	0	0	0	0	0.000327505	0.000327505	0	0.000196503	4.44164E-09	2.43462E-08	2.87878E-08	0.0287878
3972253768439	397225	3768439	0	0	0	0	0	0	0.000411683	0.000411683	0	0.00024701	5.58327E-09	3.06039E-08	3.61872E-08	0.0361872
3972753768439	397275	3768439	0	0	0	0	0	0	0.000506477	0.000506477	0	0.000303886	6.86887E-09	3.76507E-08	4.45196E-08	0.0445196
3973253768439	397325	3768439	0	0	0	0	0	0	0.000605543	0.000605543	0	0.000363326	8.2124E-09	4.50151E-08	5.32275E-08	0.0532275
3973753768439	397375	3768439	0	0	0	0	0	0	0.000691107	0.000691107	0	0.000414664	9.37284E-09	5.13759E-08	6.07487E-08	0.0607487
3974253768439	397425	3768439	0	0	0	0	0	0	0.00073663	0.00073663	0	0.000441978	9.99022E-09	5.47599E-08	6.47502E-08	0.0647502
3974753768439	397475	3768439	0	0	0	0	0	0	0.000723911	0.000723911	0	0.000434346	9.81772E-09	5.38144E-08	6.36321E-08	0.0636321
3975253768439	397525	3768439	0	0	0	0	0	0	0.000667533	0.000667533	0	0.00040052	9.05312E-09	4.96234E-08	5.86765E-08	0.0586765
3964253768489	396425	3768489	0	0	0	0	0	0	3.82717E-05	3.82717E-05	0	2.2963E-05	5.19042E-10	2.84506E-09	3.3641E-09	0.0033641
3964753768489	396475	3768489	0	0	0	0	0	0	4.15728E-05	4.15728E-05	0	2.49437E-05	5.63812E-10	3.09046E-09	3.65427E-09	0.0036543
3965253768489	396525	3768489	0	0	0	0	0	0	4.54661E-05	4.54661E-05	0	2.72797E-05	6.16614E-10	3.37988E-09	3.99649E-09	0.0039965
3970753768489	397075	3768489	0	0	0	0	0	0	0.000185896	0.000185896	0	0.000111538	2.52114E-09	1.38192E-08	1.63404E-08	0.0163404
3971253768489	397125	3768489	0	0	0	0	0	0	0.000222858	0.000222858	0	0.000133715	3.02241E-09	1.65669E-08	1.95893E-08	0.0195893
3971753768489	397175	3768489	0	0	0	0	0	0	0.000271083	0.000271083	0	0.00016265	3.67644E-09	2.01519E-08	2.38283E-08	0.0238283
3972253768489	397225	3768489	0	0	0	0	0	0	0.000331228	0.000331228	0	0.000198737	4.49213E-09	2.4623E-08	2.91151E-08	0.0291151
3972753768489	397275	3768489	0	0	0	0	0	0	0.000397036	0.000397036	0	0.000238222	5.38463E-09	2.95151E-08	3.48997E-08	0.0348997
3973253768489	397325	3768489	0	0	0	0	0	0	0.000459241	0.000459241	0	0.000275545	6.22825E-09	3.41393E-08	4.03675E-08	0.0403675
3973753768489	397375	3768489	0	0	0	0	0	0	0.000517489	0.000517489	0	0.000310494	7.01822E-09	3.84694E-08	4.54876E-08	0.0454876
3974253768489	397425	3768489	0	0	0	0	0	0	0.000543628	0.000543628	0	0.000326177	7.37271E-09	4.04124E-08	4.77851E-08	0.0477851
3974753768489	397475	3768489	0	0	0	0	0	0	0.000537095	0.000537095	0	0.000322257	7.28411E-09	3.99268E-08	4.72109E-08	0.0472109

-Mitigated Administration Building and Water Quality Laboratory			Demolition - 2025	Demolition - 2026	ite Preparation - 202	te Preparation - 202	Grading - 2025	Grading - 2026	nfrastructure - 202	nfrastructure - 202	Paving - 2025	itectural Coating - 2	Child Risk			
Unique Identifier	X (UTM)	Y (UTM)	1900	1900	1900	1900	1900	1900	2025	2026	1900	2026	3rd Trimester	0<2	Total	per million
3975253768489	397525	3768489	0	0	0	0	0	0	0.000516318	0.000516318	0	0.000309791	7.00233E-09	3.83823E-08	4.53846E-08	0.0453846
3964253768539	396425	3768539	0	0	0	0	0	0	3.70684E-05	3.70684E-05	0	2.2241E-05	5.02724E-10	2.75561E-09	3.25833E-09	0.0032583
3964753768539	396475	3768539	0	0	0	0	0	0	4.01742E-05	4.01742E-05	0	2.41045E-05	5.44845E-10	2.98649E-09	3.53133E-09	0.0035313
3965253768539	396525	3768539	0	0	0	0	0	0	4.37588E-05	4.37588E-05	0	2.62553E-05	5.9346E-10	3.25296E-09	3.84642E-09	0.0038464
3965753768539	396575	3768539	0	0	0	0	0	0	4.73813E-05	4.73813E-05	0	2.84288E-05	6.42587E-10	3.52225E-09	4.16484E-09	0.0041648
3970253768539	397025	3768539	0	0	0	0	0	0	0.000139781	0.000139781	0	8.38688E-05	1.89572E-09	1.03911E-08	1.22868E-08	0.0122868
3970753768539	397075	3768539	0	0	0	0	0	0	0.000163633	0.000163633	0	9.81796E-05	2.21919E-09	1.21642E-08	1.43834E-08	0.0143834
3971253768539	397125	3768539	0	0	0	0	0	0	0.000192473	0.000192473	0	0.000115484	2.61033E-09	1.43082E-08	1.69185E-08	0.0169185
3971753768539	397175	3768539	0	0	0	0	0	0	0.000228742	0.000228742	0	0.000137245	3.10221E-09	1.70043E-08	2.01065E-08	0.0201065
3972253768539	397225	3768539	0	0	0	0	0	0	0.000270982	0.000270982	0	0.000162589	3.67508E-09	2.01444E-08	2.38195E-08	0.0238195
3972753768539	397275	3768539	0	0	0	0	0	0	0.000318918	0.000318918	0	0.000191351	4.32518E-09	2.37079E-08	2.8033E-08	0.028033
3973253768539	397325	3768539	0	0	0	0	0	0	0.000362677	0.000362677	0	0.000217606	4.91864E-09	2.69608E-08	3.18795E-08	0.0318795
3973753768539	397375	3768539	0	0	0	0	0	0	0.000402933	0.000402933	0	0.00024176	5.4646E-09	2.99534E-08	3.5418E-08	0.035418
3974253768539	397425	3768539	0	0	0	0	0	0	0.000417845	0.000417845	0	0.000250707	5.66683E-09	3.10619E-08	3.67288E-08	0.0367288
3974753768539	397475	3768539	0	0	0	0	0	0	0.000419886	0.000419886	0	0.000251931	5.69451E-09	3.12137E-08	3.69082E-08	0.0369082
3975253768539	397525	3768539	0	0	0	0	0	0	0.000406511	0.000406511	0	0.000243907	5.51313E-09	3.02194E-08	3.57325E-08	0.0357325
3964253768589	396425	3768589	0	0	0	0	0	0	3.55438E-05	3.55438E-05	0	2.13263E-05	4.82047E-10	2.64227E-09	3.12432E-09	0.0031243
3964753768589	396475	3768589	0	0	0	0	0	0	3.87315E-05	3.87315E-05	0	2.32389E-05	5.25279E-10	2.87924E-09	3.40452E-09	0.0034045
3965253768589	396525	3768589	0	0	0	0	0	0	4.18311E-05	4.18311E-05	0	2.50986E-05	5.67315E-10	3.10966E-09	3.67697E-09	0.003677
3965753768589	396575	3768589	0	0	0	0	0	0	4.38281E-05	4.38281E-05	0	2.62969E-05	5.944E-10	3.25812E-09	3.85252E-09	0.0038525
3966253768589	396625	3768589	0	0	0	0	0	0	4.7501E-05	4.7501E-05	0	2.85006E-05	6.44211E-10	3.53115E-09	4.17536E-09	0.0041754
3968253768589	396825	3768589	0	0	0	0	0	0	7.58188E-05	7.58188E-05	0	4.54913E-05	1.02826E-09	5.63625E-09	6.66451E-09	0.0066645
3968753768589	396875	3768589	0	0	0	0	0	0	8.53694E-05	8.53694E-05	0	5.12217E-05	1.15778E-09	6.34623E-09	7.50402E-09	0.007504
3969253768589	396925	3768589	0	0	0	0	0	0	9.62808E-05	9.62808E-05	0	5.77685E-05	1.30577E-09	7.15736E-09	8.46313E-09	0.0084631
3969753768589	396975	3768589	0	0	0	0	0	0	0.00011014	0.00011014	0	6.60843E-05	1.49373E-09	8.18767E-09	9.6814E-09	0.0096814
3970253768589	397025	3768589	0	0	0	0	0	0	0.000126375	0.000126375	0	7.58251E-05	1.71391E-09	9.39454E-09	1.11084E-08	0.0111084
3970753768589	397075	3768589	0	0	0	0	0	0	0.000144909	0.000144909	0	8.69456E-05	1.96527E-09	1.07723E-08	1.27376E-08	0.0127376
3971253768589	397125	3768589	0	0	0	0	0	0	0.000168471	0.000168471	0	0.000101083	2.28481E-09	1.25239E-08	1.48087E-08	0.0148087
3971753768589	397175	3768589	0	0	0	0	0	0	0.000195642	0.000195642	0	0.000117385	2.65331E-09	1.45437E-08	1.7197E-08	0.017197
3972253768589	397225	3768589	0	0	0	0	0	0	0.000226052	0.000226052	0	0.000135631	3.06572E-09	1.68043E-08	1.98701E-08	0.0198701
3972753768589	397275	3768589	0	0	0	0	0	0	0.000259422	0.000259422	0	0.000155653	3.5183E-09	1.9285E-08	2.28033E-08	0.0228033
3973253768589	397325	3768589	0	0	0	0	0	0	0.000293958	0.000293958	0	0.000176375	3.98667E-09	2.18524E-08	2.5839E-08	0.025839
3973753768589	397375	3768589	0	0	0	0	0	0	0.000322282	0.000322282	0	0.000193369	4.37081E-09	2.39579E-08	2.83288E-08	0.0283288
3974253768589	397425	3768589	0	0	0	0	0	0	0.000330768	0.000330768	0	0.000198461	4.48589E-09	2.45888E-08	2.90747E-08	0.0290747
3974753768589	397475	3768589	0	0	0	0	0	0	0.000334542	0.000334542	0	0.000200725	4.53707E-09	2.48693E-08	2.94064E-08	0.0294064
3975253768589	397525	3768589	0	0	0	0	0	0	0.000329155	0.000329155	0	0.000197493	4.46402E-09	2.44689E-08	2.89329E-08	0.0289329
3964253768639	396425	3768639	0	0	0	0	0	0	3.27215E-05	3.27215E-05	0	1.96329E-05	4.43771E-10	2.43246E-09	2.87623E-09	0.0028762
3964753768639	396475	3768639	0	0	0	0	0	0	3.72574E-05	3.72574E-05	0	2.23544E-05	5.05287E-10	2.76966E-09	3.27494E-09	0.0032749
3965253768639	396525	3768639	0	0	0	0	0	0	3.85111E-05	3.85111E-05	0	2.31066E-05	5.22289E-10	2.86285E-09	3.38514E-09	0.0033851
3965753768639	396575	3768639	0	0	0	0	0	0	4.31099E-05	4.31099E-05	0	2.5866E-05	5.8466E-10	3.20473E-09	3.78939E-09	0.0037894
3966253768639	396625	3768639	0	0	0	0	0	0	4.7186E-05	4.7186E-05	0	2.83116E-05	6.39939E-10	3.50773E-09	4.14767E-09	0.0041477
3966753768639	396675	3768639	0	0	0	0	0	0	5.19928E-05	5.19928E-05	0	3.11957E-05	7.05129E-10	3.86506E-09	4.57019E-09	0.0045702
3967253768639	396725	3768639	0	0	0	0	0	0	5.74673E-05	5.74673E-05	0	3.44804E-05	7.79375E-10	4.27203E-09	5.05141E-09	0.0050514
3967753768639	396775	3768639	0	0	0	0	0	0	6.35404E-05	6.35404E-05	0	3.81242E-05	8.61738E-10	4.72349E-09	5.58523E-09	0.0055852
3968253768639	396825	3768639	0	0	0	0	0	0	7.06529E-05	7.06529E-05	0	4.23918E-05	9.58199E-10	5.25223E-09	6.21043E-09	0.0062104
3968753768639	396875	3768639	0	0	0	0	0	0	7.88932E-05	7.88932E-05	0	4.73359E-05	1.06995E-09	5.8648E-09	6.93475E-09	0.0069347
3969253768639	396925	3768639	0	0	0	0	0	0	8.84878E-05	8.84878E-05	0	5.30927E-05	1.20008E-09	6.57805E-09	7.77813E-09	0.0077781
3969753768639	396975	3768639	0	0	0	0	0	0	0.000100086	0.000100086	0	6.00515E-05	1.35737E-09	7.44023E-09	8.7976E-09	0.0087976
3970253768639	397025	3768639	0	0	0	0	0	0	0.000113448	0.000113448	0	6.80687E-05	1.53859E-09	8.43354E-09	9.97213E-09	0.0099721
3970753768639	397075	3768639	0	0	0	0	0	0	0.000128353	0.000128353	0	7.7012E-05	1.74074E-09	9.54159E-09	1.12823E-08	0.0112823
3971253768639	397125	3768639	0	0	0	0	0	0	0.00014455	0.00014455	0	8.67302E-05	1.9604E-09	1.07456E-08	1.2706E-08	0.012706
3971753768639	397175	3768639	0	0	0	0	0	0	0.000167532	0.000167532	0	0.000100519	2.27208E-09	1.24541E-08	1.47262E-08	0.0147262
3972253768639	397225	3768639	0	0	0	0	0	0	0.000191157	0.000191157	0	0.000114694	2.59248E-09	1.42103E-08	1.68028E-08	0.0168028
3972753768639	397275	3768639	0	0	0	0	0	0	0.000216791	0.000216791	0	0.000130074	2.94013E-09	1.61159E-08	1.9056E-08	0.019056
3973253768639	397325	3768639	0	0	0	0	0	0	0.000242261	0.000242261	0	0.000145357	3.28556E-09	1.80093E-08	2.12949E-08	0.0212949
3973753768639	397375	3768639	0	0	0	0	0	0	0.000263561	0.000263561	0	0.000158137	3.57443E-09	1.95927E-08	2.31671E-08	0.0231671
3974253768639	397425	3768639	0	0	0	0	0	0	0.000278863	0.000278863	0	0.000167318	3.78196E-09	2.07303E-08	2.45122E-08	0.0245122
3974753768639	397475	3768639	0	0	0	0	0	0	0.000273042	0.000273042	0	0.000163825	3.70301E-09	2.02975E-08	2.40006E-08	0.0240006
3975253768639	397525	3768639	0	0	0	0	0	0	0.000272047	0.000272047	0	0.000163228	3.68952E-09	2.02235E-08	2.39131E-08	0.0239131
3964253768689	396425	3768689	0	0	0	0	0	0	3.0863E-05	3.0863E-05	0	1.85178E-05	4.18566E-10	2.29431E-09	2.71288E-09	0.0027129
3964753768689	396475	3768689	0	0	0	0	0	0	3.58021E-05	3.58021E-05	0	2.14813E-05	4.8555E-10	2.66147E-09	3.14702E-09	0.003147
3965253768689	396525	3768689	0	0	0	0	0	0	3.85866E-05	3.85866E-05	0	2.3152E-05	5.23314E-10	2.86847E-09	3.39179E-09	0.0033918
3965753768689	396575	3768689	0	0	0	0	0	0	4.17681E-05	4.17681E-05	0	2.50608E-05	5.66461E-10	3.10497E-09	3.67144E-09	0.0036714
3966253768689	396625	3768689	0	0	0	0	0	0	4.53275E-05	4.53275E-05	0	2.71965E-05	6.14734E-10	3.36958E-09	3.98431E-09	0.0039843
3966753768689	396675	3768689	0	0	0	0	0	0	4.94161E-05	4.94161E-05	0	2.96497E-05	6.70184E-10	3.67352E-09	4.3437E-09	0.0043437
3967253768689	396725	3768689	0	0	0	0	0	0	5.40339E-05	5.40339E-05	0	3.24203E-05	7.32811E-10	4.0168E-09	4.74961E-09	0.0047496
3967753768689	396775	3768689	0	0	0	0	0	0	5.93699E-05	5.93699E-05	0	3.56219E-05	8.05178E-10	4.41347E-09	5.21864E-09	0.0052186
3968253768689	396825	3768689	0	0	0	0	0	0	6.55501E-05	6.55501E-05	0	3.933E-05	8.88994E-10	4.87289E-09	5.76188E-09	0.0057619
3968753768689	396875	3768689	0	0	0	0	0	0	7.27949E-05	7.27949E-05	0	4.36769E-05	9.87248E-10	5.41146E-09	6.39871E-09	0.0063987

-Mitigated Administration Building and Water Quality Laboratory			Demolition - 2025	Demolition - 2026	ite Preparation - 202	te Preparation - 202	Grading - 2025	Grading - 2026	nfrastructure - 202	nfrastructure - 202	Paving - 2025	itectural Coating -	Child Risk			
Unique Identifier	X (UTM)	Y (UTM)	1900	1900	1900	1900	1900	1900	2025	2026	1900	2026	3rd Trimester	0<2	Total	per million
3969253768689	396925	3768689	0	0	0	0	0	0	8.10603E-05	8.10603E-05	0	4.86362E-05	1.09934E-09	6.0259E-09	7.12524E-09	0.0071252
3969753768689	396975	3768689	0	0	0	0	0	0	9.06487E-05	9.06487E-05	0	5.43892E-05	1.22938E-09	6.73868E-09	7.96807E-09	0.0079681
3970253768689	397025	3768689	0	0	0	0	0	0	0.000101787	0.000101787	0	6.10721E-05	1.38044E-09	7.56668E-09	8.94712E-09	0.0089471
3970753768689	397075	3768689	0	0	0	0	0	0	0.000114739	0.000114739	0	6.88436E-05	1.5561E-09	8.52955E-09	1.00856E-08	0.0100856
3971253768689	397125	3768689	0	0	0	0	0	0	0.000127282	0.000127282	0	7.63694E-05	1.72621E-09	9.46198E-09	1.11882E-08	0.0111882
3971753768689	397175	3768689	0	0	0	0	0	0	0.000145042	0.000145042	0	8.7025E-05	1.96706E-09	1.07822E-08	1.27492E-08	0.0127492
3972253768689	397225	3768689	0	0	0	0	0	0	0.000164067	0.000164067	0	9.84404E-05	2.22509E-09	1.21965E-08	1.44216E-08	0.0144216
3972753768689	397275	3768689	0	0	0	0	0	0	0.000183351	0.000183351	0	0.000110011	2.48662E-09	1.363E-08	1.61167E-08	0.0161167
3973253768689	397325	3768689	0	0	0	0	0	0	0.000202553	0.000202553	0	0.000121532	2.74704E-09	1.50575E-08	1.78045E-08	0.0178045
3973753768689	397375	3768689	0	0	0	0	0	0	0.000219304	0.000219304	0	0.000131583	2.97422E-09	1.63028E-08	1.9277E-08	0.019277
3974253768689	397425	3768689	0	0	0	0	0	0	0.000231665	0.000231665	0	0.000138999	3.14185E-09	1.72216E-08	2.03635E-08	0.0203635
3974753768689	397475	3768689	0	0	0	0	0	0	0.000238343	0.000238343	0	0.000143006	3.23242E-09	1.7718E-08	2.09504E-08	0.0209504
3975253768689	397525	3768689	0	0	0	0	0	0	0.000238626	0.000238626	0	0.000143176	3.23626E-09	1.77391E-08	2.09754E-08	0.0209754

Garvey Reservoir Rehab -Mitigated Administration Building and Water Quality Laboratory

Offroad DPM Emissions, Ground Level Concentrations and Health Risk Calculations

Residential Receptors

Phase	Year	Emissions (lbs/day)	Meters	lbs/meter	meters (h1)	lbs/day (H1)	g/s (H1)	meters (h2)	lbs/day (H2)	g/s (H2)	hrs/day
Demolition - 2025	1900		1932.1	0	691.2	0	0	1240.9	0	0	10.00
Demolition - 2026	1900		1932.1	0	691.2	0	0	1240.9	0	0	10.00
Site Preparation - 2025	1900		1932.1	0	691.2	0	0	1240.9	0	0	10.00
Site Preparation - 2026	1900		1932.1	0	691.2	0	0	1240.9	0	0	10.00
Grading - 2025	1900		1932.1	0	691.2	0	0	1240.9	0	0	10.00
Grading - 2026	1900		1932.1	0	691.2	0	0	1240.9	0	0	10.00
Infrastructure - 2025	2025	0.0100	1932.1	5.17572E-06	691.2	0.003577455	4.50749E-05	1240.9	0.006422545	8.09223E-05	10.00
Infrastructure - 2026	2026	0.0100	1932.1	5.17572E-06	691.2	0.003577455	4.50749E-05	1240.9	0.006422545	8.09223E-05	10.00
Paving - 2025	1900	0.0000	1932.1	0	691.2	0	0	1240.9	0	0	10.00
Architectural Coating - 2026	2026		1932.1	0	691.2	0	0	1240.9	0	0	10.00

		AERMOD Column Identifier:	*5*	*5*	*5*	*5*	*5*	*5*	*5*	*5*	*5*	*5*				
			6	*6*	*6*	*6*	*6*	*6*	*6*	*6*	*6*	*6*			*MAX:*	0.056265
-Mitigated Administration Building and Water Quality Laboratory			Demolition - 2025	Demolition - 2026	Site Preparation - 2025	te Preparation - 202	Grading - 2025	Grading - 2026	Infrastructure - 2025	nfrastructure - 2026	Paving - 2025	rchitectural Coating - 202	Child Risk			
Unique Identifier	X (UTM)	Y (UTM)	1900	1900	1900	1900	1900	1900	2025	2026	1900	2026	3rd Trimester	0<2	Total	per million
396166.283767377.2	396166.28	3767377	0	0	0	0	0	0	3.83011E-06	3.83011E-06	0	0	5.19442E-11	1.58563E-10	2.10508E-10	0.0002105
396266.283767377.2	396266.28	3767377	0	0	0	0	0	0	3.91694E-06	3.91694E-06	0	0	5.31218E-11	1.62158E-10	2.1528E-10	0.0002153
396366.283767377.2	396366.28	3767377	0	0	0	0	0	0	4.07625E-06	4.07625E-06	0	0	5.52823E-11	1.68753E-10	2.24036E-10	0.000224
396466.283767377.2	396466.28	3767377	0	0	0	0	0	0	4.18245E-06	4.18245E-06	0	0	5.67227E-11	1.7315E-10	2.29873E-10	0.0002299
396566.283767377.2	396566.28	3767377	0	0	0	0	0	0	4.58512E-06	4.58512E-06	0	0	6.21836E-11	1.8982E-10	2.52003E-10	0.000252
396666.283767377.2	396666.28	3767377	0	0	0	0	0	0	4.33497E-06	4.33497E-06	0	0	5.87912E-11	1.79464E-10	2.38255E-10	0.0002383
396766.283767377.2	396766.28	3767377	0	0	0	0	0	0	4.31797E-06	4.31797E-06	0	0	5.85606E-11	1.7876E-10	2.37321E-10	0.0002373
396866.283767377.2	396866.28	3767377	0	0	0	0	0	0	4.32176E-06	4.32176E-06	0	0	5.86119E-11	1.78917E-10	2.37529E-10	0.0002375
396966.283767377.2	396966.28	3767377	0	0	0	0	0	0	4.37894E-06	4.37894E-06	0	0	5.93874E-11	1.81284E-10	2.40672E-10	0.0002407
397066.283767377.2	397066.28	3767377	0	0	0	0	0	0	4.26851E-06	4.26851E-06	0	0	5.78898E-11	1.76713E-10	2.34602E-10	0.0002346
397166.283767377.2	397166.28	3767377	0	0	0	0	0	0	4.21012E-06	4.21012E-06	0	0	5.70979E-11	1.74295E-10	2.31393E-10	0.0002314
397266.283767377.2	397266.28	3767377	0	0	0	0	0	0	4.2152E-06	4.2152E-06	0	0	5.71668E-11	1.74506E-10	2.31672E-10	0.0002317
397366.283767377.2	397366.28	3767377	0	0	0	0	0	0	4.02305E-06	4.02305E-06	0	0	5.45609E-11	1.66551E-10	2.21112E-10	0.0002211
397466.283767377.2	397466.28	3767377	0	0	0	0	0	0	3.62179E-06	3.62179E-06	0	0	4.91189E-11	1.49939E-10	1.99058E-10	0.0001991
397566.283767377.2	397566.28	3767377	0	0	0	0	0	0	3.56251E-06	3.56251E-06	0	0	4.83149E-11	1.47485E-10	1.958E-10	0.0001958
397666.283767377.2	397666.28	3767377	0	0	0	0	0	0	3.45794E-06	3.45794E-06	0	0	4.68967E-11	1.43156E-10	1.90052E-10	0.0001901
397766.283767377.2	397766.28	3767377	0	0	0	0	0	0	3.56871E-06	3.56871E-06	0	0	4.83991E-11	1.47742E-10	1.96141E-10	0.0001961
397866.283767377.2	397866.28	3767377	0	0	0	0	0	0	3.39922E-06	3.39922E-06	0	0	4.61004E-11	1.40725E-10	1.86825E-10	0.0001868
396166.283767477.2	396166.28	3767477	0	0	0	0	0	0	4.40759E-06	4.40759E-06	0	0	5.9776E-11	1.82471E-10	2.42247E-10	0.0002422
396266.283767477.2	396266.28	3767477	0	0	0	0	0	0	4.30668E-06	4.30668E-06	0	0	5.84075E-11	1.78293E-10	2.367E-10	0.0002367
396366.283767477.2	396366.28	3767477	0	0	0	0	0	0	4.53722E-06	4.53722E-06	0	0	6.1534E-11	1.87837E-10	2.49371E-10	0.0002494
396466.283767477.2	396466.28	3767477	0	0	0	0	0	0	4.96939E-06	4.96939E-06	0	0	6.73951E-11	2.05728E-10	2.73124E-10	0.0002731
396566.283767477.2	396566.28	3767477	0	0	0	0	0	0	5.03692E-06	5.03692E-06	0	0	6.83109E-11	2.08524E-10	2.76835E-10	0.0002768
396666.283767477.2	396666.28	3767477	0	0	0	0	0	0	4.89066E-06	4.89066E-06	0	0	6.63274E-11	2.02469E-10	2.68796E-10	0.0002688
396766.283767477.2	396766.28	3767477	0	0	0	0	0	0	4.92892E-06	4.92892E-06	0	0	6.68462E-11	2.04053E-10	2.70899E-10	0.0002709
396866.283767477.2	396866.28	3767477	0	0	0	0	0	0	4.9577E-06	4.9577E-06	0	0	6.72366E-11	2.05244E-10	2.72481E-10	0.0002725
396966.283767477.2	396966.28	3767477	0	0	0	0	0	0	5.0315E-06	5.0315E-06	0	0	6.82375E-11	2.083E-10	2.76537E-10	0.0002765
397066.283767477.2	397066.28	3767477	0	0	0	0	0	0	4.93481E-06	4.93481E-06	0	0	6.69261E-11	2.04297E-10	2.71223E-10	0.0002712
397166.283767477.2	397166.28	3767477	0	0	0	0	0	0	4.77938E-06	4.77938E-06	0	0	6.48183E-11	1.97862E-10	2.62681E-10	0.0002627
397266.283767477.2	397266.28	3767477	0	0	0	0	0	0	4.79518E-06	4.79518E-06	0	0	6.50325E-11	1.98516E-10	2.63549E-10	0.0002635
397366.283767477.2	397366.28	3767477	0	0	0	0	0	0	4.65093E-06	4.65093E-06	0	0	6.30761E-11	1.92544E-10	2.5562E-10	0.0002556
397466.283767477.2	397466.28	3767477	0	0	0	0	0	0	4.19494E-06	4.19494E-06	0	0	5.6892E-11	1.73667E-10	2.30559E-10	0.0002306
397566.283767477.2	397566.28	3767477	0	0	0	0	0	0	3.9783E-06	3.9783E-06	0	0	5.3954E-11	1.64698E-10	2.18652E-10	0.0002187
397666.283767477.2	397666.28	3767477	0	0	0	0	0	0	3.89105E-06	3.89105E-06	0	0	5.27707E-11	1.61086E-10	2.13857E-10	0.0002139
397766.283767477.2	397766.28	3767477	0	0	0	0	0	0	3.79864E-06	3.79864E-06	0	0	5.15174E-11	1.5726E-10	2.08778E-10	0.0002088
397866.283767477.2	397866.28	3767477	0	0	0	0	0	0	3.65582E-06	3.65582E-06	0	0	4.95804E-11	1.51348E-10	2.00928E-10	0.0002009
396166.283767577.2	396166.28	3767577	0	0	0	0	0	0	4.64617E-06	4.64617E-06	0	0	6.30116E-11	1.92347E-10	2.55359E-10	0.0002554
396266.283767577.2	396266.28	3767577	0	0	0	0	0	0	4.77621E-06	4.77621E-06	0	0	6.47752E-11	1.97731E-10	2.62506E-10	0.0002625
396366.283767577.2	396366.28	3767577	0	0	0	0	0	0	4.99528E-06	4.99528E-06	0	0	6.77463E-11	2.068E-10	2.74547E-10	0.0002745
396466.283767577.2	396466.28	3767577	0	0	0	0	0	0	5.30423E-06	5.30423E-06	0	0	7.19363E-11	2.19591E-10	2.91527E-10	0.0002915
396566.283767577.2	396566.28	3767577	0	0	0	0	0	0	5.89209E-06	5.89209E-06	0	0	7.99089E-11	2.43928E-10	3.23836E-10	0.0003238
396666.283767577.2	396666.28	3767577	0	0	0	0	0	0	5.9828E-06	5.9828E-06	0	0	8.1139E-11	2.47683E-10	3.28822E-10	0.0003288
396766.283767577.2	396766.28	3767577	0	0	0	0	0	0	5.64161E-06	5.64161E-06	0	0	7.65119E-11	2.33558E-10	3.1007E-10	0.0003101
396866.283767577.2	396866.28	3767577	0	0	0	0	0	0	5.78386E-06	5.78386E-06	0	0	7.8441E-11	2.39447E-10	3.17888E-10	0.0003179

-Mitigated Administration Building and Water Quality Laboratory			Demolition - 2025	Demolition - 2026	Site Preparation - 2025	ite Preparation - 202	Grading - 2025	Grading - 2026	Infrastructure - 2025	nfrastructure - 2026	Paving - 2025	rchitectural Coating - 202	Child Risk			
Unique Identifier	X (UTM)	Y (UTM)	1900	1900	1900	1900	1900	1900	2025	2026	1900	2026	3rd Trimester	0<2	Total	per million
396966.283767577.2	396966.28	3767577	0	0	0	0	0	0	5.86296E-06	5.86296E-06	0	0	7.95138E-11	2.42721E-10	3.22235E-10	0.0003222
397066.283767577.2	397066.28	3767577	0	0	0	0	0	0	5.86437E-06	5.86437E-06	0	0	7.95329E-11	2.4278E-10	3.22313E-10	0.0003223
397166.283767577.2	397166.28	3767577	0	0	0	0	0	0	5.64799E-06	5.64799E-06	0	0	7.65984E-11	2.33822E-10	3.1042E-10	0.0003104
397266.283767577.2	397266.28	3767577	0	0	0	0	0	0	5.57311E-06	5.57311E-06	0	0	7.55828E-11	2.30722E-10	3.06305E-10	0.0003063
397366.283767577.2	397366.28	3767577	0	0	0	0	0	0	5.43422E-06	5.43422E-06	0	0	7.36991E-11	2.24972E-10	2.98671E-10	0.0002987
397466.283767577.2	397466.28	3767577	0	0	0	0	0	0	4.84076E-06	4.84076E-06	0	0	6.56506E-11	2.00403E-10	2.66054E-10	0.0002661
397566.283767577.2	397566.28	3767577	0	0	0	0	0	0	4.56601E-06	4.56601E-06	0	0	6.19244E-11	1.89029E-10	2.50953E-10	0.000251
397666.283767577.2	397666.28	3767577	0	0	0	0	0	0	4.31766E-06	4.31766E-06	0	0	5.85564E-11	1.78747E-10	2.37304E-10	0.0002373
397766.283767577.2	397766.28	3767577	0	0	0	0	0	0	4.15353E-06	4.15353E-06	0	0	5.63304E-11	1.71952E-10	2.28283E-10	0.0002283
397866.283767577.2	397866.28	3767577	0	0	0	0	0	0	3.94844E-06	3.94844E-06	0	0	5.3549E-11	1.63462E-10	2.17011E-10	0.000217
396166.283767677.2	396166.28	3767677	0	0	0	0	0	0	5.62549E-06	5.62549E-06	0	0	7.62932E-11	2.3289E-10	3.09183E-10	0.0003092
396266.283767677.2	396266.28	3767677	0	0	0	0	0	0	5.32253E-06	5.32253E-06	0	0	7.21845E-11	2.20348E-10	2.92533E-10	0.0002925
396366.283767677.2	396366.28	3767677	0	0	0	0	0	0	5.67165E-06	5.67165E-06	0	0	7.69192E-11	2.34801E-10	3.1172E-10	0.0003117
396466.283767677.2	396466.28	3767677	0	0	0	0	0	0	6.70851E-06	6.70851E-06	0	0	9.09811E-11	2.77726E-10	3.68708E-10	0.0003687
396566.283767677.2	396566.28	3767677	0	0	0	0	0	0	6.76935E-06	6.76935E-06	0	0	9.18063E-11	2.80245E-10	3.72052E-10	0.0003721
396666.283767677.2	396666.28	3767677	0	0	0	0	0	0	6.34121E-06	6.34121E-06	0	0	8.59999E-11	2.62521E-10	3.48521E-10	0.0003485
396766.283767677.2	396766.28	3767677	0	0	0	0	0	0	6.60139E-06	6.60139E-06	0	0	8.95284E-11	2.73292E-10	3.6282E-10	0.0003628
396866.283767677.2	396866.28	3767677	0	0	0	0	0	0	6.97234E-06	6.97234E-06	0	0	9.45593E-11	2.88649E-10	3.83208E-10	0.0003832
396966.283767677.2	396966.28	3767677	0	0	0	0	0	0	7.04825E-06	7.04825E-06	0	0	9.55887E-11	2.91791E-10	3.8738E-10	0.0003874
397066.283767677.2	397066.28	3767677	0	0	0	0	0	0	7.02703E-06	7.02703E-06	0	0	9.5301E-11	2.90913E-10	3.86214E-10	0.0003862
397166.283767677.2	397166.28	3767677	0	0	0	0	0	0	6.87159E-06	6.87159E-06	0	0	9.31929E-11	2.84478E-10	3.77671E-10	0.0003777
397266.283767677.2	397266.28	3767677	0	0	0	0	0	0	6.30158E-06	6.30158E-06	0	0	8.54624E-11	2.6088E-10	3.46342E-10	0.0003463
397366.283767677.2	397366.28	3767677	0	0	0	0	0	0	6.41003E-06	6.41003E-06	0	0	8.69332E-11	2.6537E-10	3.52303E-10	0.0003523
397466.283767677.2	397466.28	3767677	0	0	0	0	0	0	5.51298E-06	5.51298E-06	0	0	7.47673E-11	2.28232E-10	3.03E-10	0.000303
397566.283767677.2	397566.28	3767677	0	0	0	0	0	0	5.28934E-06	5.28934E-06	0	0	7.17343E-11	2.18974E-10	2.90708E-10	0.0002907
397666.283767677.2	397666.28	3767677	0	0	0	0	0	0	4.98117E-06	4.98117E-06	0	0	6.75549E-11	2.06216E-10	2.73771E-10	0.0002738
397766.283767677.2	397766.28	3767677	0	0	0	0	0	0	4.64986E-06	4.64986E-06	0	0	6.30616E-11	1.925E-10	2.55562E-10	0.0002556
397866.283767677.2	397866.28	3767677	0	0	0	0	0	0	4.42501E-06	4.42501E-06	0	0	6.00123E-11	1.83192E-10	2.43204E-10	0.0002432
396166.283767777.2	396166.28	3767777	0	0	0	0	0	0	6.31355E-06	6.31355E-06	0	0	8.56247E-11	2.61376E-10	3.47E-10	0.000347
396266.283767777.2	396266.28	3767777	0	0	0	0	0	0	7.17219E-06	7.17219E-06	0	0	9.72697E-11	2.96923E-10	3.94192E-10	0.0003942
396366.283767777.2	396366.28	3767777	0	0	0	0	0	0	6.98034E-06	6.98034E-06	0	0	9.46677E-11	2.8898E-10	3.83648E-10	0.0003836
396466.283767777.2	396466.28	3767777	0	0	0	0	0	0	7.36938E-06	7.36938E-06	0	0	9.9944E-11	3.05086E-10	4.0503E-10	0.000405
396566.283767777.2	396566.28	3767777	0	0	0	0	0	0	6.97725E-06	6.97725E-06	0	0	9.46258E-11	2.88852E-10	3.83478E-10	0.0003835
396666.283767777.2	396666.28	3767777	0	0	0	0	0	0	7.33794E-06	7.33794E-06	0	0	9.95176E-11	3.03785E-10	4.03302E-10	0.0004033
396766.283767777.2	396766.28	3767777	0	0	0	0	0	0	8.04307E-06	8.04307E-06	0	0	1.09081E-10	3.32976E-10	4.42057E-10	0.0004421
396866.283767777.2	396866.28	3767777	0	0	0	0	0	0	8.58934E-06	8.58934E-06	0	0	1.16489E-10	3.55591E-10	4.7208E-10	0.0004721
396966.283767777.2	396966.28	3767777	0	0	0	0	0	0	8.48403E-06	8.48403E-06	0	0	1.15061E-10	3.51231E-10	4.66292E-10	0.0004663
397066.283767777.2	397066.28	3767777	0	0	0	0	0	0	8.49567E-06	8.49567E-06	0	0	1.15219E-10	3.51713E-10	4.66932E-10	0.0004669
397166.283767777.2	397166.28	3767777	0	0	0	0	0	0	8.50727E-06	8.50727E-06	0	0	1.15376E-10	3.52194E-10	4.6757E-10	0.0004676
397266.283767777.2	397266.28	3767777	0	0	0	0	0	0	7.91515E-06	7.91515E-06	0	0	1.07346E-10	3.2768E-10	4.35026E-10	0.000435
397366.283767777.2	397366.28	3767777	0	0	0	0	0	0	7.76167E-06	7.76167E-06	0	0	1.05264E-10	3.21326E-10	4.2659E-10	0.0004266
397466.283767777.2	397466.28	3767777	0	0	0	0	0	0	6.69808E-06	6.69808E-06	0	0	9.08398E-11	2.77295E-10	3.68135E-10	0.0003681
397566.283767777.2	397566.28	3767777	0	0	0	0	0	0	6.17864E-06	6.17864E-06	0	0	8.37951E-11	2.55791E-10	3.39586E-10	0.0003396
397666.283767777.2	397666.28	3767777	0	0	0	0	0	0	5.88008E-06	5.88008E-06	0	0	7.9746E-11	2.4343E-10	3.23176E-10	0.0003232
397766.283767777.2	397766.28	3767777	0	0	0	0	0	0	5.25012E-06	5.25012E-06	0	0	7.12025E-11	2.17351E-10	2.88553E-10	0.0002886
397866.283767777.2	397866.28	3767777	0	0	0	0	0	0	4.7865E-06	4.7865E-06	0	0	6.49148E-11	1.98157E-10	2.63072E-10	0.0002631
396166.283767877.2	396166.28	3767877	0	0	0	0	0	0	6.97761E-06	6.97761E-06	0	0	9.46308E-11	2.88867E-10	3.83498E-10	0.0003835
396266.283767877.2	396266.28	3767877	0	0	0	0	0	0	8.05927E-06	8.05927E-06	0	0	1.093E-10	3.33647E-10	4.42947E-10	0.0004429
396366.283767877.2	396366.28	3767877	0	0	0	0	0	0	8.5193E-06	8.5193E-06	0	0	1.15539E-10	3.52692E-10	4.68231E-10	0.0004682
396466.283767877.2	396466.28	3767877	0	0	0	0	0	0	8.08394E-06	8.08394E-06	0	0	1.09635E-10	3.34668E-10	4.44303E-10	0.0004443
396566.283767877.2	396566.28	3767877	0	0	0	0	0	0	8.00101E-06	8.00101E-06	0	0	1.0851E-10	3.31235E-10	4.39745E-10	0.0004397
397466.283767877.2	397466.28	3767877	0	0	0	0	0	0	9.38054E-06	9.38054E-06	0	0	1.27219E-10	3.88346E-10	5.15566E-10	0.0005156
397566.283767877.2	397566.28	3767877	0	0	0	0	0	0	7.38854E-06	7.38854E-06	0	0	1.00204E-10	3.05879E-10	4.06083E-10	0.0004061
397666.283767877.2	397666.28	3767877	0	0	0	0	0	0	6.22835E-06	6.22835E-06	0	0	8.44692E-11	2.57848E-10	3.42318E-10	0.0003423
397766.283767877.2	397766.28	3767877	0	0	0	0	0	0	5.51313E-06	5.51313E-06	0	0	7.47694E-11	2.28239E-10	3.03008E-10	0.000303
397866.283767877.2	397866.28	3767877	0	0	0	0	0	0	5.52227E-06	5.52227E-06	0	0	7.48934E-11	2.28617E-10	3.03511E-10	0.0003035
396166.283767977.2	396166.28	3767977	0	0	0	0	0	0	7.31371E-06	7.31371E-06	0	0	9.91889E-11	3.02781E-10	4.0197E-10	0.000402
396266.283767977.2	396266.28	3767977	0	0	0	0	0	0	8.45174E-06	8.45174E-06	0	0	1.14623E-10	3.49895E-10	4.64518E-10	0.0004645
396366.283767977.2	396366.28	3767977	0	0	0	0	0	0	9.14145E-06	9.14145E-06	0	0	1.23977E-10	3.78448E-10	5.02425E-10	0.0005024
396466.283767977.2	396466.28	3767977	0	0	0	0	0	0	8.78313E-06	8.78313E-06	0	0	1.19117E-10	3.63614E-10	4.82731E-10	0.0004827
397466.283767977.2	397466.28	3767977	0	0	0	0	0	0	1.10631E-05	1.10631E-05	0	0	1.50039E-10	4.58004E-10	6.08043E-10	0.000608
397566.283767977.2	397566.28	3767977	0	0	0	0	0	0	8.93416E-06	8.93416E-06	0	0	1.21166E-10	3.69866E-10	4.91032E-10	0.000491
397666.283767977.2	397666.28	3767977	0	0	0	0	0	0	7.41573E-06	7.41573E-06	0	0	1.00573E-10	3.07005E-10	4.07577E-10	0.0004076
397766.283767977.2	397766.28	3767977	0	0	0	0	0	0	7.47003E-06	7.47003E-06	0	0	1.01309E-10	3.09253E-10	4.10562E-10	0.0004106
397866.283767977.2	397866.28	3767977	0	0	0	0	0	0	6.83119E-06	6.83119E-06	0	0	9.2645E-11	2.82805E-10	3.7545E-10	0.0003755
396166.283768077.2	396166.28	3768077	0	0	0	0	0	0	9.85953E-06	9.85953E-06	0	0	1.33715E-10	4.08176E-10	5.41891E-10	0.0005419
396266.283768077.2	396266.28	3768077	0	0	0	0	0	0	9.34415E-06	9.34415E-06	0	0	1.26726E-10	3.8684E-10	5.13566E-10	0.0005136
396366.283768077.2	396366.28	3768077	0	0	0	0	0	0	1.014E-05	1.014E-05	0	0	1.3752E-10	4.19789E-10	5.57309E-10	0.0005573
396466.283768077.2	396466.28	3768077	0	0	0	0	0	0	1.09769E-05	1.09769E-05	0	0	1.48869E-10	4.54433E-10	6.03302E-10	0.0006033
397466.283768077.2	397466.28	3768077	0	0	0	0	0	0	1.91987E-05	1.91987E-05	0	0	2.60374E-10	7.9481E-10	1.05518E-09	0.0010552
397566.283768077.2	397566.28	3768077	0	0	0	0	0	0	1.51719E-05	1.51719E-05	0	0	2.05763E-10	6.28106E-10	8.33868E-10	0.0008339

-Mitigated Administration Building and Water Quality Laboratory			Demolition - 2025	Demolition - 2026	Site Preparation - 2025	te Preparation - 202	Grading - 2025	Grading - 2026	Infrastructure - 2025	nfrastructure - 2026	Paving - 2025	rchitectural Coating - 202	Child Risk			
Unique Identifier	X (UTM)	Y (UTM)	1900	1900	1900	1900	1900	1900	2025	2026	1900	2026	3rd Trimester	0<2	Total	per million
397666.283768077.2	397666.28	3768077	0	0	0	0	0	0	1.13827E-05	1.13827E-05	0	0	1.54373E-10	4.71234E-10	6.25607E-10	0.0006256
397766.283768077.2	397766.28	3768077	0	0	0	0	0	0	8.88752E-06	8.88752E-06	0	0	1.20533E-10	3.67936E-10	4.88469E-10	0.0004885
397866.283768077.2	397866.28	3768077	0	0	0	0	0	0	7.70344E-06	7.70344E-06	0	0	1.04474E-10	3.18916E-10	4.2339E-10	0.0004234
396166.283768177.2	396166.28	3768177	0	0	0	0	0	0	1.18911E-05	1.18911E-05	0	0	1.61267E-10	4.9228E-10	6.53547E-10	0.0006535
396266.283768177.2	396266.28	3768177	0	0	0	0	0	0	1.22816E-05	1.22816E-05	0	0	1.66564E-10	5.08449E-10	6.75013E-10	0.000675
396366.283768177.2	396366.28	3768177	0	0	0	0	0	0	1.337E-05	1.337E-05	0	0	1.81325E-10	5.53506E-10	7.34831E-10	0.0007348
396466.283768177.2	396466.28	3768177	0	0	0	0	0	0	1.31649E-05	1.31649E-05	0	0	1.78543E-10	5.45015E-10	7.23557E-10	0.0007236
397466.283768177.2	397466.28	3768177	0	0	0	0	0	0	4.19871E-05	4.19871E-05	0	0	5.69432E-10	1.73823E-09	2.30766E-09	0.0023077
397566.283768177.2	397566.28	3768177	0	0	0	0	0	0	2.20253E-05	2.20253E-05	0	0	2.98708E-10	9.11828E-10	1.21054E-09	0.0012105
397666.283768177.2	397666.28	3768177	0	0	0	0	0	0	1.50304E-05	1.50304E-05	0	0	2.03843E-10	6.22246E-10	8.26089E-10	0.0008261
397766.283768177.2	397766.28	3768177	0	0	0	0	0	0	1.10837E-05	1.10837E-05	0	0	1.50318E-10	4.58858E-10	6.09176E-10	0.0006092
397866.283768177.2	397866.28	3768177	0	0	0	0	0	0	9.09468E-06	9.09468E-06	0	0	1.23343E-10	3.76512E-10	4.99854E-10	0.0004999
396166.283768277.2	396166.28	3768277	0	0	0	0	0	0	1.41424E-05	1.41424E-05	0	0	1.918E-10	5.85482E-10	7.77282E-10	0.0007773
396266.283768277.2	396266.28	3768277	0	0	0	0	0	0	1.39172E-05	1.39172E-05	0	0	1.88746E-10	5.76159E-10	7.64905E-10	0.0007649
396366.283768277.2	396366.28	3768277	0	0	0	0	0	0	1.56228E-05	1.56228E-05	0	0	2.11877E-10	6.4677E-10	8.58647E-10	0.0008586
396466.283768277.2	396466.28	3768277	0	0	0	0	0	0	1.61667E-05	1.61667E-05	0	0	2.19254E-10	6.69288E-10	8.88542E-10	0.0008885
397366.283768277.2	397366.28	3768277	0	0	0	0	0	0	0.000333703	0.000333703	0	0	4.5257E-09	1.3815E-08	1.83407E-08	0.0183407
397466.283768277.2	397466.28	3768277	0	0	0	0	0	0	6.55061E-05	6.55061E-05	0	0	8.88398E-10	2.7119E-09	3.60029E-09	0.0036003
397566.283768277.2	397566.28	3768277	0	0	0	0	0	0	2.99056E-05	2.99056E-05	0	0	4.05581E-10	1.23806E-09	1.64365E-09	0.0016436
397666.283768277.2	397666.28	3768277	0	0	0	0	0	0	1.87384E-05	1.87384E-05	0	0	2.54131E-10	7.75753E-10	1.02988E-09	0.0010299
397766.283768277.2	397766.28	3768277	0	0	0	0	0	0	1.3423E-05	1.3423E-05	0	0	1.82044E-10	5.55701E-10	7.37745E-10	0.0007377
397866.283768277.2	397866.28	3768277	0	0	0	0	0	0	1.03337E-05	1.03337E-05	0	0	1.40146E-10	4.27805E-10	5.67951E-10	0.000568
396166.283768377.2	396166.28	3768377	0	0	0	0	0	0	1.6667E-05	1.6667E-05	0	0	2.26038E-10	6.89998E-10	9.16037E-10	0.000916
396266.283768377.2	396266.28	3768377	0	0	0	0	0	0	1.73546E-05	1.73546E-05	0	0	2.35364E-10	7.18466E-10	9.5383E-10	0.0009538
396366.283768377.2	396366.28	3768377	0	0	0	0	0	0	1.93763E-05	1.93763E-05	0	0	2.62783E-10	8.02163E-10	1.06495E-09	0.0010649
396466.283768377.2	396466.28	3768377	0	0	0	0	0	0	2.09048E-05	2.09048E-05	0	0	2.83512E-10	8.6544E-10	1.14895E-09	0.001149
397266.283768377.2	397266.28	3768377	0	0	0	0	0	0	0.000523875	0.000523875	0	0	7.10482E-09	2.1688E-08	2.87928E-08	0.0287928
397366.283768377.2	397366.28	3768377	0	0	0	0	0	0	0.000235623	0.000235623	0	0	3.19553E-09	9.75458E-09	1.29501E-08	0.0129501
397466.283768377.2	397466.28	3768377	0	0	0	0	0	0	7.603E-05	7.603E-05	0	0	1.03112E-09	3.14758E-09	4.1787E-09	0.0041787
397566.283768377.2	397566.28	3768377	0	0	0	0	0	0	3.65004E-05	3.65004E-05	0	0	4.95021E-10	1.51109E-09	2.00611E-09	0.0020061
397666.283768377.2	397666.28	3768377	0	0	0	0	0	0	2.21244E-05	2.21244E-05	0	0	3.00052E-10	9.15931E-10	1.21598E-09	0.001216
397766.283768377.2	397766.28	3768377	0	0	0	0	0	0	1.55538E-05	1.55538E-05	0	0	2.10942E-10	6.43914E-10	8.54856E-10	0.0008549
397866.283768377.2	397866.28	3768377	0	0	0	0	0	0	1.11884E-05	1.11884E-05	0	0	1.51738E-10	4.63191E-10	6.14929E-10	0.0006149
396166.283768477.2	396166.28	3768477	0	0	0	0	0	0	2.04481E-05	2.04481E-05	0	0	2.77319E-10	8.46535E-10	1.12385E-09	0.0011239
396266.283768477.2	396266.28	3768477	0	0	0	0	0	0	2.20367E-05	2.20367E-05	0	0	2.98864E-10	9.12302E-10	1.21117E-09	0.0012112
396366.283768477.2	396366.28	3768477	0	0	0	0	0	0	2.44257E-05	2.44257E-05	0	0	3.31263E-10	1.0112E-09	1.34247E-09	0.0013425
396466.283768477.2	396466.28	3768477	0	0	0	0	0	0	2.73511E-05	2.73511E-05	0	0	3.70938E-10	1.13231E-09	1.50325E-09	0.0015033
397166.283768477.2	397166.28	3768477	0	0	0	0	0	0	9.73672E-05	9.73672E-05	0	0	1.3205E-09	4.03092E-09	5.35142E-09	0.0053514
397266.283768477.2	397266.28	3768477	0	0	0	0	0	0	0.000531762	0.000531762	0	0	7.21178E-09	2.20145E-08	2.92263E-08	0.0292263
397366.283768477.2	397366.28	3768477	0	0	0	0	0	0	0.000215441	0.000215441	0	0	2.92182E-09	8.91907E-09	1.18409E-08	0.0118409
397466.283768477.2	397466.28	3768477	0	0	0	0	0	0	7.00666E-05	7.00666E-05	0	0	9.50247E-10	2.9007E-09	3.85094E-09	0.0038509
397566.283768477.2	397566.28	3768477	0	0	0	0	0	0	4.18824E-05	4.18824E-05	0	0	5.68011E-10	1.73389E-09	2.30191E-09	0.0023019
397666.283768477.2	397666.28	3768477	0	0	0	0	0	0	2.59892E-05	2.59892E-05	0	0	3.52467E-10	1.07593E-09	1.4284E-09	0.0014284
397766.283768477.2	397766.28	3768477	0	0	0	0	0	0	1.64422E-05	1.64422E-05	0	0	2.22991E-10	6.80694E-10	9.03685E-10	0.0009037
397866.283768477.2	397866.28	3768477	0	0	0	0	0	0	1.28178E-05	1.28178E-05	0	0	1.73836E-10	5.30646E-10	7.04482E-10	0.0007045
396166.283768577.2	396166.28	3768577	0	0	0	0	0	0	2.60193E-05	2.60193E-05	0	0	3.52875E-10	1.07718E-09	1.43005E-09	0.0014301
396266.283768577.2	396266.28	3768577	0	0	0	0	0	0	2.93301E-05	2.93301E-05	0	0	3.97777E-10	1.21424E-09	1.61202E-09	0.001612
396366.283768577.2	396366.28	3768577	0	0	0	0	0	0	3.16434E-05	3.16434E-05	0	0	4.2915E-10	1.31001E-09	1.73916E-09	0.0017392
396466.283768577.2	396466.28	3768577	0	0	0	0	0	0	3.79976E-05	3.79976E-05	0	0	5.15326E-10	1.57307E-09	2.08839E-09	0.0020884
396566.283768577.2	396566.28	3768577	0	0	0	0	0	0	3.72132E-05	3.72132E-05	0	0	5.04687E-10	1.54059E-09	2.04528E-09	0.0020453
396866.283768577.2	396866.28	3768577	0	0	0	0	0	0	4.76217E-05	4.76217E-05	0	0	6.45848E-10	1.9715E-09	2.61735E-09	0.0026173
396966.283768577.2	396966.28	3768577	0	0	0	0	0	0	5.52952E-05	5.52952E-05	0	0	7.49917E-10	2.28917E-09	3.03909E-09	0.0030391
397066.283768577.2	397066.28	3768577	0	0	0	0	0	0	6.83391E-05	6.83391E-05	0	0	9.26819E-10	2.82918E-09	3.756E-09	0.003756
397166.283768577.2	397166.28	3768577	0	0	0	0	0	0	0.000117007	0.000117007	0	0	1.58685E-09	4.84398E-09	6.43083E-09	0.0064308
397266.283768577.2	397266.28	3768577	0	0	0	0	0	0	0.000515848	0.000515848	0	0	6.99596E-09	2.13557E-08	2.83516E-08	0.0283516
397366.283768577.2	397366.28	3768577	0	0	0	0	0	0	0.000216068	0.000216068	0	0	2.93032E-09	8.94501E-09	1.18753E-08	0.0118753
397466.283768577.2	397466.28	3768577	0	0	0	0	0	0	6.92328E-05	6.92328E-05	0	0	9.38939E-10	2.86618E-09	3.80512E-09	0.0038051
397566.283768577.2	397566.28	3768577	0	0	0	0	0	0	4.14429E-05	4.14429E-05	0	0	5.62051E-10	1.7157E-09	2.27775E-09	0.0022778
397666.283768577.2	397666.28	3768577	0	0	0	0	0	0	2.75516E-05	2.75516E-05	0	0	3.73657E-10	1.14061E-09	1.51427E-09	0.0015143
397766.283768577.2	397766.28	3768577	0	0	0	0	0	0	1.96067E-05	1.96067E-05	0	0	2.65907E-10	8.117E-10	1.07761E-09	0.0010776
397866.283768577.2	397866.28	3768577	0	0	0	0	0	0	1.43156E-05	1.43156E-05	0	0	1.94149E-10	5.92654E-10	7.86803E-10	0.0007868
396166.283768677.2	396166.28	3768677	0	0	0	0	0	0	4.57094E-05	4.57094E-05	0	0	6.19913E-10	1.89233E-09	2.51224E-09	0.0025122
396266.283768677.2	396266.28	3768677	0	0	0	0	0	0	5.21859E-05	5.21859E-05	0	0	7.07749E-10	2.16045E-09	2.8682E-09	0.0028682
396366.283768677.2	396366.28	3768677	0	0	0	0	0	0	5.06731E-05	5.06731E-05	0	0	6.87231E-10	2.09782E-09	2.78505E-09	0.0027851
396466.283768677.2	396466.28	3768677	0	0	0	0	0	0	6.22106E-05	6.22106E-05	0	0	8.43704E-10	2.57547E-09	3.41917E-09	0.0034192
396566.283768677.2	396566.28	3768677	0	0	0	0	0	0	6.28893E-05	6.28893E-05	0	0	8.52909E-10	2.60356E-09	3.45647E-09	0.0034565
396666.283768677.2	396666.28	3768677	0	0	0	0	0	0	6.42071E-05	6.42071E-05	0	0	8.7078E-10	2.65812E-09	3.5289E-09	0.0035289
396766.283768677.2	396766.28	3768677	0	0	0	0	0	0	6.66299E-05	6.66299E-05	0	0	9.03639E-10	2.75842E-09	3.66206E-09	0.0036621
396866.283768677.2	396866.28	3768677	0	0	0	0	0	0	7.3998E-05	7.3998E-05	0	0	1.00356E-09	3.06345E-09	4.06702E-09	0.004067
396966.283768677.2	396966.28	3768677	0	0	0	0	0	0	8.09988E-05	8.09988E-05	0	0	1.09851E-09	3.35328E-09	4.45179E-09	0.0044518
397066.283768677.2	397066.28	3768677	0	0	0	0	0	0	9.39578E-05	9.39578E-05	0	0	1.27426E-09	3.88977E-09	5.16403E-09	0.005164

-Mitigated Administration Building and Water Quality Laboratory			Demolition - 2025	Demolition - 2026	Site Preparation - 2025	ite Preparation - 202	Grading - 2025	Grading - 2026	Infrastructure - 2025	nfrastructure - 2026	Paving - 2025	rchitectural Coating - 202	Child Risk			
Unique Identifier	X (UTM)	Y (UTM)	1900	1900	1900	1900	1900	1900	2025	2026	1900	2026	3rd Trimester	0<2	Total	per million
397166.283768677.2	397166.28	3768677	0	0	0	0	0	0	0.000147469	0.000147469	0	0	1.99998E-09	6.10507E-09	8.10505E-09	0.0081051
397366.283768677.2	397366.28	3768677	0	0	0	0	0	0	0.000196102	0.000196102	0	0	2.65955E-09	8.11845E-09	1.0778E-08	0.010778
397466.283768677.2	397466.28	3768677	0	0	0	0	0	0	7.90103E-05	7.90103E-05	0	0	1.07154E-09	3.27096E-09	4.3425E-09	0.0043425
397566.283768677.2	397566.28	3768677	0	0	0	0	0	0	4.30868E-05	4.30868E-05	0	0	5.84345E-10	1.78375E-09	2.3681E-09	0.0023681
397666.283768677.2	397666.28	3768677	0	0	0	0	0	0	2.82298E-05	2.82298E-05	0	0	3.82854E-10	1.16869E-09	1.55154E-09	0.0015515
397766.283768677.2	397766.28	3768677	0	0	0	0	0	0	2.08218E-05	2.08218E-05	0	0	2.82386E-10	8.62005E-10	1.14439E-09	0.0011444
397866.283768677.2	397866.28	3768677	0	0	0	0	0	0	1.52892E-05	1.52892E-05	0	0	2.07353E-10	6.32961E-10	8.40314E-10	0.0008403
396166.283768777.2	396166.28	3768777	0	0	0	0	0	0	0.000132727	0.000132727	0	0	1.80005E-09	5.49478E-09	7.29484E-09	0.0072948
396266.283768777.2	396266.28	3768777	0	0	0	0	0	0	0.000164923	0.000164923	0	0	2.23669E-09	6.82766E-09	9.06435E-09	0.0090644
396366.283768777.2	396366.28	3768777	0	0	0	0	0	0	0.000120907	0.000120907	0	0	1.63975E-09	5.00544E-09	6.64519E-09	0.0066452
396466.283768777.2	396466.28	3768777	0	0	0	0	0	0	0.000157991	0.000157991	0	0	2.14269E-09	6.54071E-09	8.6834E-09	0.0086834
396566.283768777.2	396566.28	3768777	0	0	0	0	0	0	0.000169188	0.000169188	0	0	2.29453E-09	7.00423E-09	9.29876E-09	0.0092988
396666.283768777.2	396666.28	3768777	0	0	0	0	0	0	0.000169128	0.000169128	0	0	2.29373E-09	7.00177E-09	9.2955E-09	0.0092955
396766.283768777.2	396766.28	3768777	0	0	0	0	0	0	0.000174954	0.000174954	0	0	2.37274E-09	7.24296E-09	9.61571E-09	0.0096157
396866.283768777.2	396866.28	3768777	0	0	0	0	0	0	0.000181896	0.000181896	0	0	2.46688E-09	7.53032E-09	9.9972E-09	0.0099972
396966.283768777.2	396966.28	3768777	0	0	0	0	0	0	0.000186382	0.000186382	0	0	2.52772E-09	7.71603E-09	1.02438E-08	0.0102438
397066.283768777.2	397066.28	3768777	0	0	0	0	0	0	0.000200791	0.000200791	0	0	2.72314E-09	8.31259E-09	1.10357E-08	0.0110357
397166.283768777.2	397166.28	3768777	0	0	0	0	0	0	0.000241802	0.000241802	0	0	3.27934E-09	1.00104E-08	1.32897E-08	0.0132897
397266.283768777.2	397266.28	3768777	0	0	0	0	0	0	0.000771231	0.000771231	0	0	1.04595E-08	3.19283E-08	4.23878E-08	0.0423878
397366.283768777.2	397366.28	3768777	0	0	0	0	0	0	0.000267969	0.000267969	0	0	3.63421E-09	1.10937E-08	1.47279E-08	0.0147279
397466.283768777.2	397466.28	3768777	0	0	0	0	0	0	9.42505E-05	9.42505E-05	0	0	1.27823E-09	3.90189E-09	5.18012E-09	0.0051801
397566.283768777.2	397566.28	3768777	0	0	0	0	0	0	5.0549E-05	5.0549E-05	0	0	6.85549E-10	2.09269E-09	2.77824E-09	0.0027782
397666.283768777.2	397666.28	3768777	0	0	0	0	0	0	3.17912E-05	3.17912E-05	0	0	4.31155E-10	1.31613E-09	1.74728E-09	0.0017473
397766.283768777.2	397766.28	3768777	0	0	0	0	0	0	2.17646E-05	2.17646E-05	0	0	2.95173E-10	9.01037E-10	1.19621E-09	0.0011962
397866.283768777.2	397866.28	3768777	0	0	0	0	0	0	1.58433E-05	1.58433E-05	0	0	2.14867E-10	6.55898E-10	8.70765E-10	0.0008708
396166.283768877.2	396166.28	3768877	0	0	0	0	0	0	0.000534373	0.000534373	0	0	7.24719E-09	2.21226E-08	2.93698E-08	0.0293698
396266.283768877.2	396266.28	3768877	0	0	0	0	0	0	0.000688214	0.000688214	0	0	9.3336E-09	2.84915E-08	3.78251E-08	0.0378251
396366.283768877.2	396366.28	3768877	0	0	0	0	0	0	0.000673899	0.000673899	0	0	9.13946E-09	2.78988E-08	3.70383E-08	0.0370383
396466.283768877.2	396466.28	3768877	0	0	0	0	0	0	0.000742351	0.000742351	0	0	1.00678E-08	3.07327E-08	4.08005E-08	0.0408005
396566.283768877.2	396566.28	3768877	0	0	0	0	0	0	0.00070014	0.00070014	0	0	9.49534E-09	2.89852E-08	3.84805E-08	0.0384805
396666.283768877.2	396666.28	3768877	0	0	0	0	0	0	0.000760661	0.000760661	0	0	1.03161E-08	3.14907E-08	4.18069E-08	0.0418069
396766.283768877.2	396766.28	3768877	0	0	0	0	0	0	0.000736205	0.000736205	0	0	9.98445E-09	3.04782E-08	4.04627E-08	0.0404627
396866.283768877.2	396866.28	3768877	0	0	0	0	0	0	0.000715148	0.000715148	0	0	9.69888E-09	2.96065E-08	3.93054E-08	0.0393054
396966.283768877.2	396966.28	3768877	0	0	0	0	0	0	0.000687674	0.000687674	0	0	9.32627E-09	2.84691E-08	3.77954E-08	0.0377954
397066.283768877.2	397066.28	3768877	0	0	0	0	0	0	0.000695221	0.000695221	0	0	9.42863E-09	2.87816E-08	3.82102E-08	0.0382102
397166.283768877.2	397166.28	3768877	0	0	0	0	0	0	0.000714546	0.000714546	0	0	9.69072E-09	2.95816E-08	3.92723E-08	0.0392723
397266.283768877.2	397266.28	3768877	0	0	0	0	0	0	0.000750688	0.000750688	0	0	1.01809E-08	3.10779E-08	4.12587E-08	0.0412587
397366.283768877.2	397366.28	3768877	0	0	0	0	0	0	0.000369107	0.000369107	0	0	5.00585E-09	1.52807E-08	2.02865E-08	0.0202865
397466.283768877.2	397466.28	3768877	0	0	0	0	0	0	9.87798E-05	9.87798E-05	0	0	1.33966E-09	4.0894E-09	5.42906E-09	0.0054291
397566.283768877.2	397566.28	3768877	0	0	0	0	0	0	5.05103E-05	5.05103E-05	0	0	6.85024E-10	2.09108E-09	2.77611E-09	0.0027761
397666.283768877.2	397666.28	3768877	0	0	0	0	0	0	3.1331E-05	3.1331E-05	0	0	4.24913E-10	1.29708E-09	1.72199E-09	0.001722
397766.283768877.2	397766.28	3768877	0	0	0	0	0	0	2.16575E-05	2.16575E-05	0	0	2.9372E-10	8.966E-10	1.19032E-09	0.0011903
397866.283768877.2	397866.28	3768877	0	0	0	0	0	0	1.60291E-05	1.60291E-05	0	0	2.17387E-10	6.6359E-10	8.80977E-10	0.000881
3964253767739	396425	3767739	0	0	0	0	0	0	7.20397E-06	7.20397E-06	0	0	9.77007E-11	2.98238E-10	3.95939E-10	0.0003959
3964753767739	396475	3767739	0	0	0	0	0	0	7.37609E-06	7.37609E-06	0	0	1.00035E-10	3.05364E-10	4.05398E-10	0.0004054
3965253767739	396525	3767739	0	0	0	0	0	0	6.87507E-06	6.87507E-06	0	0	9.32401E-11	2.84622E-10	3.77862E-10	0.0003779
3965753767739	396575	3767739	0	0	0	0	0	0	7.07382E-06	7.07382E-06	0	0	9.59355E-11	2.9285E-10	3.88786E-10	0.0003888
3966253767739	396625	3767739	0	0	0	0	0	0	6.79381E-06	6.79381E-06	0	0	9.2138E-11	2.81258E-10	3.73396E-10	0.0003734
3966753767739	396675	3767739	0	0	0	0	0	0	6.95207E-06	6.95207E-06	0	0	9.42844E-11	2.8781E-10	3.82094E-10	0.0003821
3967253767739	396725	3767739	0	0	0	0	0	0	7.26558E-06	7.26558E-06	0	0	9.85362E-11	3.00789E-10	3.99325E-10	0.0003993
3967753767739	396775	3767739	0	0	0	0	0	0	7.32665E-06	7.32665E-06	0	0	9.93644E-11	3.03317E-10	4.02681E-10	0.0004027
3968253767739	396825	3767739	0	0	0	0	0	0	7.73952E-06	7.73952E-06	0	0	1.04964E-10	3.20409E-10	4.25373E-10	0.0004254
3968753767739	396875	3767739	0	0	0	0	0	0	7.96493E-06	7.96493E-06	0	0	1.08021E-10	3.29741E-10	4.37762E-10	0.0004378
3969253767739	396925	3767739	0	0	0	0	0	0	7.94294E-06	7.94294E-06	0	0	1.07723E-10	3.28831E-10	4.36553E-10	0.0004366
3969753767739	396975	3767739	0	0	0	0	0	0	7.89019E-06	7.89019E-06	0	0	1.07007E-10	3.26647E-10	4.33654E-10	0.0004337
3970253767739	397025	3767739	0	0	0	0	0	0	7.85697E-06	7.85697E-06	0	0	1.06557E-10	3.25272E-10	4.31828E-10	0.0004318
3970753767739	397075	3767739	0	0	0	0	0	0	7.89709E-06	7.89709E-06	0	0	1.07101E-10	3.26933E-10	4.34033E-10	0.000434
3971253767739	397125	3767739	0	0	0	0	0	0	7.90673E-06	7.90673E-06	0	0	1.07232E-10	3.27332E-10	4.34563E-10	0.0004346
3971753767739	397175	3767739	0	0	0	0	0	0	7.80276E-06	7.80276E-06	0	0	1.05821E-10	3.23028E-10	4.28849E-10	0.0004288
3972253767739	397225	3767739	0	0	0	0	0	0	7.63719E-06	7.63719E-06	0	0	1.03576E-10	3.16173E-10	4.19749E-10	0.0004197
3972753767739	397275	3767739	0	0	0	0	0	0	7.20278E-06	7.20278E-06	0	0	9.76845E-11	2.98189E-10	3.95873E-10	0.0003959
3973253767739	397325	3767739	0	0	0	0	0	0	7.20566E-06	7.20566E-06	0	0	9.77236E-11	2.98308E-10	3.96032E-10	0.000396
3973753767739	397375	3767739	0	0	0	0	0	0	7.18178E-06	7.18178E-06	0	0	9.73997E-11	2.97319E-10	3.94719E-10	0.0003947
3974253767739	397425	3767739	0	0	0	0	0	0	6.98887E-06	6.98887E-06	0	0	9.47834E-11	2.89333E-10	3.84116E-10	0.0003841
3974753767739	397475	3767739	0	0	0	0	0	0	6.17468E-06	6.17468E-06	0	0	8.37413E-11	2.55626E-10	3.39368E-10	0.0003394
3975253767739	397525	3767739	0	0	0	0	0	0	5.96908E-06	5.96908E-06	0	0	8.0953E-11	2.47115E-10	3.28068E-10	0.0003281
3964253767789	396425	3767789	0	0	0	0	0	0	7.6955E-06	7.6955E-06	0	0	1.04367E-10	3.18587E-10	4.22954E-10	0.000423
3964753767789	396475	3767789	0	0	0	0	0	0	7.41389E-06	7.41389E-06	0	0	1.00548E-10	3.06929E-10	4.07476E-10	0.0004075
3965253767789	396525	3767789	0	0	0	0	0	0	7.02164E-06	7.02164E-06	0	0	9.52279E-11	2.9069E-10	3.85918E-10	0.0003859
3965753767789	396575	3767789	0	0	0	0	0	0	7.10663E-06	7.10663E-06	0	0	9.63805E-11	2.94208E-10	3.90589E-10	0.0003906
3966253767789	396625	3767789	0	0	0	0	0	0	7.29373E-06	7.29373E-06	0	0	9.8918E-11	3.01954E-10	4.00872E-10	0.0004009

-Mitigated Administration Building and Water Quality Laboratory			Demolition - 2025	Demolition - 2026	Site Preparation - 2025	ite Preparation - 202	Grading - 2025	Grading - 2026	Infrastructure - 2025	nfrastructure - 2026	Paving - 2025	rchitectural Coating - 202	Child Risk			
Unique Identifier	X (UTM)	Y (UTM)	1900	1900	1900	1900	1900	1900	2025	2026	1900	2026	3rd Trimester	0<2	Total	per million
3966753767789	396675	3767789	0	0	0	0	0	0	7.51273E-06	7.51273E-06	0	0	1.01888E-10	3.11021E-10	4.12909E-10	0.0004129
3967253767789	396725	3767789	0	0	0	0	0	0	8.10376E-06	8.10376E-06	0	0	1.09904E-10	3.35489E-10	4.45393E-10	0.0004454
3967753767789	396775	3767789	0	0	0	0	0	0	8.30081E-06	8.30081E-06	0	0	1.12576E-10	3.43646E-10	4.56222E-10	0.0004562
3968253767789	396825	3767789	0	0	0	0	0	0	8.67271E-06	8.67271E-06	0	0	1.1762E-10	3.59043E-10	4.76663E-10	0.0004767
3968753767789	396875	3767789	0	0	0	0	0	0	8.79661E-06	8.79661E-06	0	0	1.193E-10	3.64172E-10	4.83472E-10	0.0004835
3969253767789	396925	3767789	0	0	0	0	0	0	8.79264E-06	8.79264E-06	0	0	1.19246E-10	3.64008E-10	4.83254E-10	0.0004833
3969753767789	396975	3767789	0	0	0	0	0	0	8.68443E-06	8.68443E-06	0	0	1.17779E-10	3.59528E-10	4.77307E-10	0.0004773
3970253767789	397025	3767789	0	0	0	0	0	0	8.63588E-06	8.63588E-06	0	0	1.1712E-10	3.57518E-10	4.74638E-10	0.0004746
3970753767789	397075	3767789	0	0	0	0	0	0	8.71677E-06	8.71677E-06	0	0	1.18217E-10	3.60867E-10	4.79084E-10	0.0004791
3971253767789	397125	3767789	0	0	0	0	0	0	8.77979E-06	8.77979E-06	0	0	1.19072E-10	3.63476E-10	4.82548E-10	0.0004825
3971753767789	397175	3767789	0	0	0	0	0	0	8.74035E-06	8.74035E-06	0	0	1.18537E-10	3.61843E-10	4.8038E-10	0.0004804
3972253767789	397225	3767789	0	0	0	0	0	0	8.63093E-06	8.63093E-06	0	0	1.17053E-10	3.57313E-10	4.74366E-10	0.0004744
3972753767789	397275	3767789	0	0	0	0	0	0	8.15315E-06	8.15315E-06	0	0	1.10573E-10	3.37533E-10	4.48107E-10	0.0004481
3973253767789	397325	3767789	0	0	0	0	0	0	7.95506E-06	7.95506E-06	0	0	1.07887E-10	3.29333E-10	4.3722E-10	0.0004372
3973753767789	397375	3767789	0	0	0	0	0	0	7.98046E-06	7.98046E-06	0	0	1.08231E-10	3.30384E-10	4.38616E-10	0.0004386
3974253767789	397425	3767789	0	0	0	0	0	0	7.81708E-06	7.81708E-06	0	0	1.06016E-10	3.2362E-10	4.29636E-10	0.0004296
3974753767789	397475	3767789	0	0	0	0	0	0	6.81191E-06	6.81191E-06	0	0	9.23836E-11	2.82007E-10	3.74391E-10	0.0003744
3975253767789	397525	3767789	0	0	0	0	0	0	6.60683E-06	6.60683E-06	0	0	8.96022E-11	2.73517E-10	3.63119E-10	0.0003631
3964253767839	396425	3767839	0	0	0	0	0	0	8.21604E-06	8.21604E-06	0	0	1.11426E-10	3.40137E-10	4.51564E-10	0.0004516
3964753767839	396475	3767839	0	0	0	0	0	0	8.16376E-06	8.16376E-06	0	0	1.10717E-10	3.37973E-10	4.4869E-10	0.0004487
3965253767839	396525	3767839	0	0	0	0	0	0	7.40369E-06	7.40369E-06	0	0	1.00409E-10	3.06506E-10	4.06916E-10	0.0004069
3965753767839	396575	3767839	0	0	0	0	0	0	7.61628E-06	7.61628E-06	0	0	1.03292E-10	3.15307E-10	4.186E-10	0.0004186
3966253767839	396625	3767839	0	0	0	0	0	0	7.84574E-06	7.84574E-06	0	0	1.06404E-10	3.24807E-10	4.31211E-10	0.0004312
3966753767839	396675	3767839	0	0	0	0	0	0	8.75109E-06	8.75109E-06	0	0	1.18683E-10	3.62288E-10	4.8097E-10	0.000481
3967253767839	396725	3767839	0	0	0	0	0	0	9.16746E-06	9.16746E-06	0	0	1.2433E-10	3.79525E-10	5.03854E-10	0.0005039
3967753767839	396775	3767839	0	0	0	0	0	0	9.40771E-06	9.40771E-06	0	0	1.27588E-10	3.89471E-10	5.17059E-10	0.0005171
3968253767839	396825	3767839	0	0	0	0	0	0	9.64221E-06	9.64221E-06	0	0	1.30768E-10	3.99179E-10	5.29947E-10	0.0005299
3968753767839	396875	3767839	0	0	0	0	0	0	9.75542E-06	9.75542E-06	0	0	1.32304E-10	4.03866E-10	5.3617E-10	0.0005362
3969253767839	396925	3767839	0	0	0	0	0	0	9.78484E-06	9.78484E-06	0	0	1.32703E-10	4.05084E-10	5.37786E-10	0.0005378
3969753767839	396975	3767839	0	0	0	0	0	0	9.68405E-06	9.68405E-06	0	0	1.31336E-10	4.00911E-10	5.32247E-10	0.0005322
3970253767839	397025	3767839	0	0	0	0	0	0	9.60676E-06	9.60676E-06	0	0	1.30287E-10	3.97711E-10	5.27999E-10	0.000528
3970753767839	397075	3767839	0	0	0	0	0	0	9.81404E-06	9.81404E-06	0	0	1.33099E-10	4.06293E-10	5.39391E-10	0.0005394
3971253767839	397125	3767839	0	0	0	0	0	0	9.99446E-06	9.99446E-06	0	0	1.35545E-10	4.13762E-10	5.49307E-10	0.0005493
3971753767839	397175	3767839	0	0	0	0	0	0	9.86235E-06	9.86235E-06	0	0	1.33754E-10	4.08293E-10	5.42046E-10	0.000542
3972253767839	397225	3767839	0	0	0	0	0	0	9.48179E-06	9.48179E-06	0	0	1.28593E-10	3.92538E-10	5.21131E-10	0.0005211
3972753767839	397275	3767839	0	0	0	0	0	0	8.98205E-06	8.98205E-06	0	0	1.21815E-10	3.71849E-10	4.93664E-10	0.0004937
3973253767839	397325	3767839	0	0	0	0	0	0	8.56318E-06	8.56318E-06	0	0	1.16134E-10	3.54508E-10	4.70643E-10	0.0004706
3973753767839	397375	3767839	0	0	0	0	0	0	8.90805E-06	8.90805E-06	0	0	1.20812E-10	3.68786E-10	4.89597E-10	0.0004896
3974753767839	397475	3767839	0	0	0	0	0	0	8.39684E-06	8.39684E-06	0	0	1.13878E-10	3.47622E-10	4.615E-10	0.0004615
3975253767839	397525	3767839	0	0	0	0	0	0	7.17645E-06	7.17645E-06	0	0	9.73275E-11	2.97099E-10	3.94426E-10	0.0003944
3964253767889	396425	3767889	0	0	0	0	0	0	8.68786E-06	8.68786E-06	0	0	1.17825E-10	3.5967E-10	4.77495E-10	0.0004775
3964753767889	396475	3767889	0	0	0	0	0	0	7.72394E-06	7.72394E-06	0	0	1.04753E-10	3.19764E-10	4.24517E-10	0.0004245
3965253767889	396525	3767889	0	0	0	0	0	0	7.92693E-06	7.92693E-06	0	0	1.07506E-10	3.28168E-10	4.35674E-10	0.0004357
3965753767889	396575	3767889	0	0	0	0	0	0	8.28594E-06	8.28594E-06	0	0	1.12374E-10	3.43031E-10	4.55405E-10	0.0004554
3974753767889	397475	3767889	0	0	0	0	0	0	9.11005E-06	9.11005E-06	0	0	1.23551E-10	3.77148E-10	5.00699E-10	0.0005007
3975253767889	397525	3767889	0	0	0	0	0	0	7.91657E-06	7.91657E-06	0	0	1.07365E-10	3.27739E-10	4.35104E-10	0.0004351
3964253767939	396425	3767939	0	0	0	0	0	0	9.223E-06	9.223E-06	0	0	1.25083E-10	3.81824E-10	5.06907E-10	0.0005069
3964753767939	396475	3767939	0	0	0	0	0	0	8.29009E-06	8.29009E-06	0	0	1.12431E-10	3.43203E-10	4.55633E-10	0.0004556
3965253767939	396525	3767939	0	0	0	0	0	0	8.58704E-06	8.58704E-06	0	0	1.16458E-10	3.55496E-10	4.71954E-10	0.000472
3974753767939	397475	3767939	0	0	0	0	0	0	9.67969E-06	9.67969E-06	0	0	1.31276E-10	4.00731E-10	5.32007E-10	0.000532
3975253767939	397525	3767939	0	0	0	0	0	0	8.84858E-06	8.84858E-06	0	0	1.20005E-10	3.66323E-10	4.86328E-10	0.0004863
3964253767989	396425	3767989	0	0	0	0	0	0	9.04835E-06	9.04835E-06	0	0	1.22714E-10	3.74594E-10	4.97308E-10	0.0004973
3964753767989	396475	3767989	0	0	0	0	0	0	9.00918E-06	9.00918E-06	0	0	1.22183E-10	3.72972E-10	4.95156E-10	0.0004952
3974753767989	397475	3767989	0	0	0	0	0	0	1.11242E-05	1.11242E-05	0	0	1.50867E-10	4.60532E-10	6.11399E-10	0.0006114
3975253767989	397525	3767989	0	0	0	0	0	0	1.00822E-05	1.00822E-05	0	0	1.36735E-10	4.17395E-10	5.5413E-10	0.0005541
3964253768039	396425	3768039	0	0	0	0	0	0	9.75461E-06	9.75461E-06	0	0	1.32293E-10	4.03832E-10	5.36125E-10	0.0005361
3964753768039	396475	3768039	0	0	0	0	0	0	1.00792E-05	1.00792E-05	0	0	1.36695E-10	4.1727E-10	5.53965E-10	0.000554
3974753768039	397475	3768039	0	0	0	0	0	0	1.48514E-05	1.48514E-05	0	0	2.01416E-10	6.14837E-10	8.16253E-10	0.0008163
3975253768039	397525	3768039	0	0	0	0	0	0	1.38974E-05	1.38974E-05	0	0	1.88477E-10	5.7534E-10	7.63817E-10	0.0007638
3964253768089	396425	3768089	0	0	0	0	0	0	1.07571E-05	1.07571E-05	0	0	1.45888E-10	4.45333E-10	5.91221E-10	0.0005912
3964753768089	396475	3768089	0	0	0	0	0	0	1.13061E-05	1.13061E-05	0	0	1.53334E-10	4.68064E-10	6.21398E-10	0.0006214
3974753768089	397475	3768089	0	0	0	0	0	0	1.99899E-05	1.99899E-05	0	0	2.71104E-10	8.27565E-10	1.09867E-09	0.0010987
3975253768089	397525	3768089	0	0	0	0	0	0	1.841E-05	1.841E-05	0	0	2.49678E-10	7.62159E-10	1.01184E-09	0.0010118
3964253768139	396425	3768139	0	0	0	0	0	0	1.33947E-05	1.33947E-05	0	0	1.8166E-10	5.54529E-10	7.36189E-10	0.0007362
3964753768139	396475	3768139	0	0	0	0	0	0	1.23382E-05	1.23382E-05	0	0	1.67331E-10	5.10791E-10	6.78123E-10	0.0006781
3974253768139	397425	3768139	0	0	0	0	0	0	4.24084E-05	4.24084E-05	0	0	5.75145E-10	1.75567E-09	2.33082E-09	0.0023308
3974753768139	397475	3768139	0	0	0	0	0	0	3.07235E-05	3.07235E-05	0	0	4.16674E-10	1.27193E-09	1.6886E-09	0.0016886
3975253768139	397525	3768139	0	0	0	0	0	0	2.31816E-05	2.31816E-05	0	0	3.1439E-10	9.59697E-10	1.27409E-09	0.0012741
3964253768189	396425	3768189	0	0	0	0	0	0	1.44308E-05	1.44308E-05	0	0	1.95712E-10	5.97425E-10	7.93136E-10	0.0007931
3964753768189	396475	3768189	0	0	0	0	0	0	1.35066E-05	1.35066E-05	0	0	1.83177E-10	5.59161E-10	7.42338E-10	0.0007423
3973753768189	397375	3768189	0	0	0	0	0	0	0.000251374	0.000251374	0	0	3.40915E-09	1.04067E-08	1.38158E-08	0.0138158

-Mitigated Administration Building and Water Quality Laboratory			Demolition - 2025	Demolition - 2026	Site Preparation - 2025	te Preparation - 202	Grading - 2025	Grading - 2026	Infrastructure - 2025	nfrastructure - 2026	Paving - 2025	rchitectural Coating - 202	Child Risk			
Unique Identifier	X (UTM)	Y (UTM)	1900	1900	1900	1900	1900	1900	2025	2026	1900	2026	3rd Trimester	0<2	Total	per million
3974253768189	397425	3768189	0	0	0	0	0	0	7.26092E-05	7.26092E-05	0	0	9.8473E-10	3.00596E-09	3.99069E-09	0.0039907
3974753768189	397475	3768189	0	0	0	0	0	0	4.16037E-05	4.16037E-05	0	0	5.64232E-10	1.72236E-09	2.28659E-09	0.0022866
3975253768189	397525	3768189	0	0	0	0	0	0	2.86451E-05	2.86451E-05	0	0	3.88487E-10	1.18588E-09	1.57437E-09	0.0015744
3964253768239	396425	3768239	0	0	0	0	0	0	1.56187E-05	1.56187E-05	0	0	2.11822E-10	6.46601E-10	8.58423E-10	0.0008584
3964753768239	396475	3768239	0	0	0	0	0	0	1.49348E-05	1.49348E-05	0	0	2.02547E-10	6.18289E-10	8.20837E-10	0.0008208
3973753768239	397375	3768239	0	0	0	0	0	0	0.000366194	0.000366194	0	0	4.96635E-09	1.51601E-08	2.01265E-08	0.0201265
3974253768239	397425	3768239	0	0	0	0	0	0	9.31217E-05	9.31217E-05	0	0	1.26292E-09	3.85516E-09	5.11808E-09	0.0051181
3974753768239	397475	3768239	0	0	0	0	0	0	5.02084E-05	5.02084E-05	0	0	6.80929E-10	2.07858E-09	2.75951E-09	0.0027595
3975253768239	397525	3768239	0	0	0	0	0	0	3.40586E-05	3.40586E-05	0	0	4.61904E-10	1.41E-09	1.8719E-09	0.0018719
3964253768289	396425	3768289	0	0	0	0	0	0	1.67187E-05	1.67187E-05	0	0	2.2674E-10	6.92141E-10	9.18881E-10	0.0009189
3964753768289	396475	3768289	0	0	0	0	0	0	1.66394E-05	1.66394E-05	0	0	2.25665E-10	6.88858E-10	9.14523E-10	0.0009145
3973253768289	397325	3768289	0	0	0	0	0	0	0.000970128	0.000970128	0	0	1.31569E-08	4.01624E-08	5.33194E-08	0.0533194
3973753768289	397375	3768289	0	0	0	0	0	0	0.000256808	0.000256808	0	0	3.48284E-09	1.06316E-08	1.41145E-08	0.0141145
3974253768289	397425	3768289	0	0	0	0	0	0	0.000113184	0.000113184	0	0	1.53501E-09	4.68571E-09	6.22072E-09	0.0062207
3974753768289	397475	3768289	0	0	0	0	0	0	6.23968E-05	6.23968E-05	0	0	8.46228E-10	2.58317E-09	3.4294E-09	0.0034294
3975253768289	397525	3768289	0	0	0	0	0	0	4.04861E-05	4.04861E-05	0	0	5.49075E-10	1.67609E-09	2.22516E-09	0.0022252
3964253768339	396425	3768339	0	0	0	0	0	0	1.89441E-05	1.89441E-05	0	0	2.56921E-10	7.8427E-10	1.04119E-09	0.0010412
3964753768339	396475	3768339	0	0	0	0	0	0	1.88028E-05	1.88028E-05	0	0	2.55004E-10	7.78419E-10	1.03342E-09	0.0010334
3965253768339	396525	3768339	0	0	0	0	0	0	2.00438E-05	2.00438E-05	0	0	2.71835E-10	8.29797E-10	1.10163E-09	0.0011016
3972753768339	397275	3768339	0	0	0	0	0	0	0.000788164	0.000788164	0	0	1.06891E-08	3.26293E-08	4.33184E-08	0.0433184
3973253768339	397325	3768339	0	0	0	0	0	0	0.000581036	0.000581036	0	0	7.88004E-09	2.40544E-08	3.19344E-08	0.0319344
3973753768339	397375	3768339	0	0	0	0	0	0	0.00021402	0.00021402	0	0	2.90256E-09	8.86026E-09	1.17628E-08	0.0117628
3974253768339	397425	3768339	0	0	0	0	0	0	0.000112533	0.000112533	0	0	1.52618E-09	4.65878E-09	6.18496E-09	0.006185
3974753768339	397475	3768339	0	0	0	0	0	0	6.76729E-05	6.76729E-05	0	0	9.17783E-10	2.8016E-09	3.71938E-09	0.0037194
3975253768339	397525	3768339	0	0	0	0	0	0	4.496E-05	4.496E-05	0	0	6.0975E-10	1.86131E-09	2.47106E-09	0.0024711
3964253768389	396425	3768389	0	0	0	0	0	0	2.10518E-05	2.10518E-05	0	0	2.85505E-10	8.71525E-10	1.15703E-09	0.001157
3964753768389	396475	3768389	0	0	0	0	0	0	2.14284E-05	2.14284E-05	0	0	2.90614E-10	8.87119E-10	1.17773E-09	0.0011777
3965253768389	396525	3768389	0	0	0	0	0	0	2.24599E-05	2.24599E-05	0	0	3.04602E-10	9.29819E-10	1.23442E-09	0.0012344
3972253768389	397225	3768389	0	0	0	0	0	0	0.000189473	0.000189473	0	0	2.56964E-09	7.84402E-09	1.04137E-08	0.0104137
3972753768389	397275	3768389	0	0	0	0	0	0	0.000750467	0.000750467	0	0	1.01779E-08	3.10687E-08	4.12466E-08	0.0412466
3973253768389	397325	3768389	0	0	0	0	0	0	0.00058123	0.00058123	0	0	7.88267E-09	2.40624E-08	3.19451E-08	0.0319451
3973753768389	397375	3768389	0	0	0	0	0	0	0.000206027	0.000206027	0	0	2.79415E-09	8.52934E-09	1.13235E-08	0.0113235
3974253768389	397425	3768389	0	0	0	0	0	0	0.000112723	0.000112723	0	0	1.52876E-09	4.66665E-09	6.19542E-09	0.0061954
3974753768389	397475	3768389	0	0	0	0	0	0	7.12803E-05	7.12803E-05	0	0	9.66707E-10	2.95094E-09	3.91765E-09	0.0039176
3975253768389	397525	3768389	0	0	0	0	0	0	4.89604E-05	4.89604E-05	0	0	6.64004E-10	2.02692E-09	2.69092E-09	0.0026909
3964253768439	396425	3768439	0	0	0	0	0	0	2.38928E-05	2.38928E-05	0	0	3.24035E-10	9.89141E-10	1.31318E-09	0.0013132
3964753768439	396475	3768439	0	0	0	0	0	0	2.46051E-05	2.46051E-05	0	0	3.33695E-10	1.01863E-09	1.35232E-09	0.0013523
3965253768439	396525	3768439	0	0	0	0	0	0	2.54921E-05	2.54921E-05	0	0	3.45725E-10	1.05535E-09	1.40107E-09	0.0014011
3971753768439	397175	3768439	0	0	0	0	0	0	0.000102075	0.000102075	0	0	1.38435E-09	4.22583E-09	5.61019E-09	0.0056102
3972253768439	397225	3768439	0	0	0	0	0	0	0.000198768	0.000198768	0	0	2.69571E-09	8.22884E-09	1.09245E-08	0.0109245
3972753768439	397275	3768439	0	0	0	0	0	0	0.000754179	0.000754179	0	0	1.02282E-08	3.12224E-08	4.14506E-08	0.0414506
3973253768439	397325	3768439	0	0	0	0	0	0	0.000567481	0.000567481	0	0	7.69621E-09	2.34932E-08	3.11894E-08	0.0311894
3973753768439	397375	3768439	0	0	0	0	0	0	0.000190445	0.000190445	0	0	2.58282E-09	7.88424E-09	1.04671E-08	0.0104671
3974253768439	397425	3768439	0	0	0	0	0	0	0.000104214	0.000104214	0	0	1.41335E-09	4.31436E-09	5.72771E-09	0.0057277
3974753768439	397475	3768439	0	0	0	0	0	0	7.37959E-05	7.37959E-05	0	0	1.00082E-09	3.05509E-09	4.05591E-09	0.0040559
3975253768439	397525	3768439	0	0	0	0	0	0	5.18253E-05	5.18253E-05	0	0	7.02858E-10	2.14552E-09	2.84838E-09	0.0028484
3964253768489	396425	3768489	0	0	0	0	0	0	2.72532E-05	2.72532E-05	0	0	3.6961E-10	1.12826E-09	1.49787E-09	0.0014979
3964753768489	396475	3768489	0	0	0	0	0	0	2.8417E-05	2.8417E-05	0	0	3.85394E-10	1.17644E-09	1.56183E-09	0.0015618
3965253768489	396525	3768489	0	0	0	0	0	0	2.95221E-05	2.95221E-05	0	0	4.00381E-10	1.22219E-09	1.62257E-09	0.0016226
3970753768489	397075	3768489	0	0	0	0	0	0	5.81399E-05	5.81399E-05	0	0	7.88496E-10	2.40694E-09	3.19544E-09	0.0031954
3971253768489	397125	3768489	0	0	0	0	0	0	7.3862E-05	7.3862E-05	0	0	1.00172E-09	3.05783E-09	4.05955E-09	0.0040595
3971753768489	397175	3768489	0	0	0	0	0	0	0.000106825	0.000106825	0	0	1.44876E-09	4.42244E-09	5.87121E-09	0.0058712
3972253768489	397225	3768489	0	0	0	0	0	0	0.000197614	0.000197614	0	0	2.68005E-09	8.18104E-09	1.08611E-08	0.0108611
3972753768489	397275	3768489	0	0	0	0	0	0	0.000740434	0.000740434	0	0	1.00418E-08	3.06533E-08	4.06952E-08	0.0406952
3973253768489	397325	3768489	0	0	0	0	0	0	0.000489762	0.000489762	0	0	6.64218E-09	2.02757E-08	2.69179E-08	0.0269179
3973753768489	397375	3768489	0	0	0	0	0	0	0.000187596	0.000187596	0	0	2.54418E-09	7.7663E-09	1.03105E-08	0.0103105
3974253768489	397425	3768489	0	0	0	0	0	0	0.000103543	0.000103543	0	0	1.40426E-09	4.28661E-09	5.69087E-09	0.0056909
3974753768489	397475	3768489	0	0	0	0	0	0	6.45349E-05	6.45349E-05	0	0	8.75226E-10	2.67169E-09	3.54691E-09	0.0035469
3975253768489	397525	3768489	0	0	0	0	0	0	4.67519E-05	4.67519E-05	0	0	6.34052E-10	1.93549E-09	2.56954E-09	0.0025695
3964253768539	396425	3768539	0	0	0	0	0	0	3.16938E-05	3.16938E-05	0	0	4.29834E-10	1.3121E-09	1.74193E-09	0.0017419
3964753768539	396475	3768539	0	0	0	0	0	0	3.34216E-05	3.34216E-05	0	0	4.53266E-10	1.38363E-09	1.83689E-09	0.0018369
3965253768539	396525	3768539	0	0	0	0	0	0	3.45357E-05	3.45357E-05	0	0	4.68375E-10	1.42975E-09	1.89812E-09	0.0018981
3965753768539	396575	3768539	0	0	0	0	0	0	3.32369E-05	3.32369E-05	0	0	4.50761E-10	1.37598E-09	1.82674E-09	0.0018267
3970253768539	397025	3768539	0	0	0	0	0	0	5.49967E-05	5.49967E-05	0	0	7.45868E-10	2.27682E-09	3.02268E-09	0.0030227
3970753768539	397075	3768539	0	0	0	0	0	0	6.43527E-05	6.43527E-05	0	0	8.72754E-10	2.66414E-09	3.5369E-09	0.0035369
3971253768539	397125	3768539	0	0	0	0	0	0	8.08591E-05	8.08591E-05	0	0	1.09662E-09	3.3475E-09	4.44411E-09	0.0044441
3971753768539	397175	3768539	0	0	0	0	0	0	0.000115452	0.000115452	0	0	1.56577E-09	4.77961E-09	6.34538E-09	0.0063454
3972253768539	397225	3768539	0	0	0	0	0	0	0.000202489	0.000202489	0	0	2.74617E-09	8.38287E-09	1.1129E-08	0.011129
3972753768539	397275	3768539	0	0	0	0	0	0	0.000674464	0.000674464	0	0	9.14712E-09	2.79222E-08	3.70693E-08	0.0370693
3973253768539	397325	3768539	0	0	0	0	0	0	0.000472319	0.000472319	0	0	6.40562E-09	1.95536E-08	2.59592E-08	0.0259592
3973753768539	397375	3768539	0	0	0	0	0	0	0.000188947	0.000188947	0	0	2.56251E-09	7.82224E-09	1.03848E-08	0.0103848

-Mitigated Administration Building and Water Quality Laboratory			Demolition - 2025	Demolition - 2026	Site Preparation - 2025	ite Preparation - 202	Grading - 2025	Grading - 2026	Infrastructure - 2025	nfrastructure - 2026	Paving - 2025	rchitectural Coating - 202	Child Risk			
Unique Identifier	X (UTM)	Y (UTM)	1900	1900	1900	1900	1900	1900	2025	2026	1900	2026	3rd Trimester	0<2	Total	per million
3974253768539	397425	3768539	0	0	0	0	0	0	0.000101197	0.000101197	0	0	1.37244E-09	4.18948E-09	5.56192E-09	0.0055619
3974753768539	397475	3768539	0	0	0	0	0	0	6.5278E-05	6.5278E-05	0	0	8.85304E-10	2.70245E-09	3.58776E-09	0.0035878
3975253768539	397525	3768539	0	0	0	0	0	0	4.64848E-05	4.64848E-05	0	0	6.3043E-10	1.92443E-09	2.55486E-09	0.0025549
3964253768589	396425	3768589	0	0	0	0	0	0	3.69868E-05	3.69868E-05	0	0	5.01617E-10	1.53122E-09	2.03284E-09	0.0020328
3964753768589	396475	3768589	0	0	0	0	0	0	4.01359E-05	4.01359E-05	0	0	5.44325E-10	1.66159E-09	2.20592E-09	0.0022059
3965253768589	396525	3768589	0	0	0	0	0	0	3.99925E-05	3.99925E-05	0	0	5.42381E-10	1.65565E-09	2.19804E-09	0.002198
3965753768589	396575	3768589	0	0	0	0	0	0	3.85848E-05	3.85848E-05	0	0	5.23289E-10	1.59738E-09	2.12067E-09	0.0021207
3966253768589	396625	3768589	0	0	0	0	0	0	3.8145E-05	3.8145E-05	0	0	5.17324E-10	1.57917E-09	2.09649E-09	0.0020965
3968253768589	396825	3768589	0	0	0	0	0	0	4.69972E-05	4.69972E-05	0	0	6.37379E-10	1.94564E-09	2.58302E-09	0.002583
3968753768589	396875	3768589	0	0	0	0	0	0	4.98163E-05	4.98163E-05	0	0	6.75611E-10	2.06235E-09	2.73796E-09	0.002738
3969253768589	396925	3768589	0	0	0	0	0	0	5.41098E-05	5.41098E-05	0	0	7.3384E-10	2.2401E-09	2.97394E-09	0.0029739
3969753768589	396975	3768589	0	0	0	0	0	0	5.80856E-05	5.80856E-05	0	0	7.87761E-10	2.40469E-09	3.19246E-09	0.0031925
3970253768589	397025	3768589	0	0	0	0	0	0	6.38991E-05	6.38991E-05	0	0	8.66603E-10	2.64537E-09	3.51197E-09	0.003512
3970753768589	397075	3768589	0	0	0	0	0	0	7.2588E-05	7.2588E-05	0	0	9.84443E-10	3.00508E-09	3.98952E-09	0.0039895
3971253768589	397125	3768589	0	0	0	0	0	0	9.11865E-05	9.11865E-05	0	0	1.23668E-09	3.77504E-09	5.01172E-09	0.0050117
3971753768589	397175	3768589	0	0	0	0	0	0	0.000129253	0.000129253	0	0	1.75293E-09	5.35096E-09	7.10389E-09	0.0071039
3972253768589	397225	3768589	0	0	0	0	0	0	0.000226062	0.000226062	0	0	3.06586E-09	9.35876E-09	1.24246E-08	0.0124246
3972753768589	397275	3768589	0	0	0	0	0	0	0.000720408	0.000720408	0	0	9.77022E-09	2.98243E-08	3.95945E-08	0.0395945
3973253768589	397325	3768589	0	0	0	0	0	0	0.000469065	0.000469065	0	0	6.36149E-09	1.94189E-08	2.57804E-08	0.0257804
3973753768589	397375	3768589	0	0	0	0	0	0	0.000188904	0.000188904	0	0	2.56192E-09	7.82044E-09	1.03824E-08	0.0103824
3974253768589	397425	3768589	0	0	0	0	0	0	9.82419E-05	9.82419E-05	0	0	1.33236E-09	4.06713E-09	5.39949E-09	0.0053995
3974753768589	397475	3768589	0	0	0	0	0	0	6.48067E-05	6.48067E-05	0	0	8.78913E-10	2.68294E-09	3.56186E-09	0.0035619
3975253768589	397525	3768589	0	0	0	0	0	0	4.6876E-05	4.6876E-05	0	0	6.35735E-10	1.94063E-09	2.57636E-09	0.0025764
3964253768639	396425	3768639	0	0	0	0	0	0	4.45817E-05	4.45817E-05	0	0	6.0462E-10	1.84564E-09	2.45026E-09	0.0024503
3964753768639	396475	3768639	0	0	0	0	0	0	5.04824E-05	5.04824E-05	0	0	6.84646E-10	2.08993E-09	2.77458E-09	0.0027746
3965253768639	396525	3768639	0	0	0	0	0	0	4.74389E-05	4.74389E-05	0	0	6.43369E-10	1.96393E-09	2.6073E-09	0.0026073
3965753768639	396575	3768639	0	0	0	0	0	0	4.7726E-05	4.7726E-05	0	0	6.47263E-10	1.97582E-09	2.62308E-09	0.0026231
3966253768639	396625	3768639	0	0	0	0	0	0	4.8578E-05	4.8578E-05	0	0	6.58818E-10	2.01109E-09	2.66991E-09	0.0026699
3966753768639	396675	3768639	0	0	0	0	0	0	4.95918E-05	4.95918E-05	0	0	6.72566E-10	2.05306E-09	2.72562E-09	0.0027256
3967253768639	396725	3768639	0	0	0	0	0	0	5.11221E-05	5.11221E-05	0	0	6.93321E-10	2.11641E-09	2.80973E-09	0.0028097
3967753768639	396775	3768639	0	0	0	0	0	0	5.38951E-05	5.38951E-05	0	0	7.30928E-10	2.23121E-09	2.96214E-09	0.0029621
3968253768639	396825	3768639	0	0	0	0	0	0	5.6558E-05	5.6558E-05	0	0	7.67043E-10	2.34145E-09	3.1085E-09	0.0031085
3968753768639	396875	3768639	0	0	0	0	0	0	6.06448E-05	6.06448E-05	0	0	8.22468E-10	2.51064E-09	3.33311E-09	0.0033331
3969253768639	396925	3768639	0	0	0	0	0	0	6.52452E-05	6.52452E-05	0	0	8.84859E-10	2.70109E-09	3.58595E-09	0.003586
3969753768639	396975	3768639	0	0	0	0	0	0	6.93001E-05	6.93001E-05	0	0	9.39852E-10	2.86897E-09	3.80882E-09	0.0038088
3970253768639	397025	3768639	0	0	0	0	0	0	7.47681E-05	7.47681E-05	0	0	1.01401E-09	3.09534E-09	4.10934E-09	0.0041093
3970753768639	397075	3768639	0	0	0	0	0	0	8.29754E-05	8.29754E-05	0	0	1.12532E-09	3.43511E-09	4.56043E-09	0.0045604
3971253768639	397125	3768639	0	0	0	0	0	0	9.97722E-05	9.97722E-05	0	0	1.35312E-09	4.13048E-09	5.4836E-09	0.0054836
3971753768639	397175	3768639	0	0	0	0	0	0	0.000145964	0.000145964	0	0	1.97957E-09	6.04276E-09	8.02233E-09	0.0080223
3972253768639	397225	3768639	0	0	0	0	0	0	0.000287662	0.000287662	0	0	3.90129E-09	1.19089E-08	1.58102E-08	0.0158102
3972753768639	397275	3768639	0	0	0	0	0	0	0.001002035	0.001002035	0	0	1.35897E-08	4.14834E-08	5.5073E-08	0.055073
3973253768639	397325	3768639	0	0	0	0	0	0	0.000422525	0.000422525	0	0	5.73031E-09	1.74922E-08	2.32225E-08	0.0232225
3973753768639	397375	3768639	0	0	0	0	0	0	0.000186159	0.000186159	0	0	2.5247E-09	7.70682E-09	1.02315E-08	0.0102315
3974253768639	397425	3768639	0	0	0	0	0	0	0.000108512	0.000108512	0	0	1.47165E-09	4.49231E-09	5.96395E-09	0.005964
3974753768639	397475	3768639	0	0	0	0	0	0	6.44145E-05	6.44145E-05	0	0	8.73594E-10	2.66671E-09	3.5403E-09	0.0035403
3975253768639	397525	3768639	0	0	0	0	0	0	4.7333E-05	4.7333E-05	0	0	6.41933E-10	1.95955E-09	2.60148E-09	0.0026015
3964253768689	396425	3768689	0	0	0	0	0	0	5.74646E-05	5.74646E-05	0	0	7.79339E-10	2.37899E-09	3.15832E-09	0.0031583
3964753768689	396475	3768689	0	0	0	0	0	0	6.81666E-05	6.81666E-05	0	0	9.2448E-10	2.82204E-09	3.74652E-09	0.0037465
3965253768689	396525	3768689	0	0	0	0	0	0	7.07517E-05	7.07517E-05	0	0	9.59539E-10	2.92906E-09	3.8886E-09	0.0038886
3965753768689	396575	3768689	0	0	0	0	0	0	6.95382E-05	6.95382E-05	0	0	9.43081E-10	2.87882E-09	3.8219E-09	0.0038219
3966253768689	396625	3768689	0	0	0	0	0	0	7.03557E-05	7.03557E-05	0	0	9.54168E-10	2.91266E-09	3.86683E-09	0.0038668
3966753768689	396675	3768689	0	0	0	0	0	0	6.98859E-05	6.98859E-05	0	0	9.47796E-10	2.89321E-09	3.84101E-09	0.003841
3967253768689	396725	3768689	0	0	0	0	0	0	7.10507E-05	7.10507E-05	0	0	9.63593E-10	2.94144E-09	3.90503E-09	0.003905
3967753768689	396775	3768689	0	0	0	0	0	0	7.20714E-05	7.20714E-05	0	0	9.77436E-10	2.98369E-09	3.96113E-09	0.0039611
3968253768689	396825	3768689	0	0	0	0	0	0	7.59723E-05	7.59723E-05	0	0	1.03034E-09	3.14519E-09	4.17553E-09	0.0041755
3968753768689	396875	3768689	0	0	0	0	0	0	8.00195E-05	8.00195E-05	0	0	1.08523E-09	3.31274E-09	4.39796E-09	0.004398
3969253768689	396925	3768689	0	0	0	0	0	0	8.34748E-05	8.34748E-05	0	0	1.13209E-09	3.45578E-09	4.58787E-09	0.0045879
3969753768689	396975	3768689	0	0	0	0	0	0	8.70377E-05	8.70377E-05	0	0	1.18041E-09	3.60328E-09	4.78369E-09	0.0047837
3970253768689	397025	3768689	0	0	0	0	0	0	9.20079E-05	9.20079E-05	0	0	1.24782E-09	3.80905E-09	5.05687E-09	0.0050569
3970753768689	397075	3768689	0	0	0	0	0	0	0.000100925	0.000100925	0	0	1.36875E-09	4.17819E-09	5.54694E-09	0.0055469
3971253768689	397125	3768689	0	0	0	0	0	0	0.000117858	0.000117858	0	0	1.5984E-09	4.87922E-09	6.47762E-09	0.0064776
3971753768689	397175	3768689	0	0	0	0	0	0	0.000164349	0.000164349	0	0	2.22891E-09	6.8039E-09	9.03281E-09	0.0090328
3972253768689	397225	3768689	0	0	0	0	0	0	0.000372703	0.000372703	0	0	5.05461E-09	1.54296E-08	2.04842E-08	0.0204842
3972753768689	397275	3768689	0	0	0	0	0	0	0.001023715	0.001023715	0	0	1.38837E-08	4.23809E-08	5.62646E-08	0.0562646
3973253768689	397325	3768689	0	0	0	0	0	0	0.000342623	0.000342623	0	0	4.64668E-09	1.41843E-08	1.8831E-08	0.018831
3973753768689	397375	3768689	0	0	0	0	0	0	0.000173454	0.000173454	0	0	2.35239E-09	7.18083E-09	9.53321E-09	0.0095332
3974253768689	397425	3768689	0	0	0	0	0	0	0.000108349	0.000108349	0	0	1.46943E-09	4.48554E-09	5.95497E-09	0.005955
3974753768689	397475	3768689	0	0	0	0	0	0	7.39421E-05	7.39421E-05	0	0	1.00281E-09	3.06114E-09	4.06394E-09	0.0040639
3975253768689	397525	3768689	0	0	0	0	0	0	5.3666E-05	5.3666E-05	0	0	7.27821E-10	2.22173E-09	2.94955E-09	0.0029495

-Mitigated Administration Building and Water Quality Laboratory

Garvey Reservoir Rehab -Mitigated Administration Building and Water Quality Laboratory

Maximum Individual Non-Cancer Impact Calculations - Sensitive Receptors (Maximum Impacted Senior Residential Receptor) (IMPACT AT ALL OTHER LOCATIONS ON THE PROJECT SITE WOULD BE LESS THAN SHOWN)

Maximum Non-cancer Chronic Hazards / Toxicological Endpoints*

Receptor Group	Pollutant	CREL[1]	CONC	WFrac	$CONC_{WF}$	HI		ALIM	BN	CVS	DEV	ENDC	EYE	HEM	IMMUN	KIDN	NS	REPRO	RESP	SK
Project:																				
MEI - Max	DPM	5.00E+00	2.39E-02	1.00E+00	2.39E-02	0.005		-	-	-	-	-	-	-	-	-	-	-	4.79E-03	-
							Total Risk				-			-				-	0.005	
							Threshold				1.00			1.00				1.00	1.00	
							Over?				NO			NO				NO	NO	

Notes:

1. California Air Resources Board, "Consolidated Table of OEHHA/ARB Approved Risk Assessment Health Values," "OEHHA/ARB Approved Chronic Reference Exposure Levels and Target Organs," "OEHHA/ARB Approved Acute Reference Exposure Levels and Target Organs," and "OEHHA/ARB Approved 8-Hour Reference Exposure Levels and Target Organs," http://www.arb.ca.gov/toxics/healthval/healthval.htm. Tables last updated: May 8, 2018. Downloaded: 08/14/18.

Source: ESA, 2020

Where:

$CONC_{WF}$	Pollutant Concentration ($\mu g/m^3$) multiplied by the weight fraction
CREL	Chronic Reference Exposure Level
HI	Hazard Index
MEI	Maximally Exposed Individual
WFrac	Weight fraction of speciated component

* Key to Toxicological Endpoints

ALIM	Alimentary Tract	EYE	Eye	NS	Nervous System
BN	Bone	HEM	Hematologic System	REPRO	Reproductive System
CVS	Cardiovascular System	IMMUN	Immune System	RESP	Respiratory System
DEV	Developmental System	KIDN	Kidney	SK	Skin
ENDC	Endocrine System				

Chronic HI

Proposed Pump Station

Garvey Reservoir Rehab - Unmitigated Proposed Pump Station

Cancer Risk Summary & Maximum Annual GLC for Chronic Calculations

Cancer Risk Summary

323

Max Risk: 1.12234

XY	X	Y	Offroad Risk	Haul Risk	Total Risk
7449041451	574490	4145130	0.001502687	0	0.001503
7448041451	574480	4145140	0.001661351	0	0.001661
7449041451	574490	4145140	0.001905172	0	0.001905
7449041451	574490	4145150	0.002164256	0	0.002164
7450041451	574500	4145150	0.002498052	0	0.002498
7446041451	574460	4145160	0.002802125	0	0.002802
7449041451	574490	4145160	0.003094146	0	0.003094
7450041451	574500	4145160	0.003434772	0	0.003435
7451041451	574510	4145160	0.003866578	0	0.003867
7446041451	574460	4145170	0.004195153	0	0.004195
7447041451	574470	4145170	0.004330118	0	0.00433
7448041451	574480	4145170	0.004295573	0	0.004296
7449041451	574490	4145170	0.004340963	0	0.004341
7450041451	574500	4145170	0.004306017	0	0.004306
7451041451	574510	4145170	0.004098348	0	0.004098
7452041451	574520	4145170	0.003817975	0	0.003818
7446041451	574460	4145180	0.003391792	0	0.003392
7447041451	574470	4145180	0.003035501	0	0.003036
7448041451	574480	4145180	0.00157981	0	0.00158
7449041451	574490	4145180	0.001736064	0	0.001736
7450041451	574500	4145180	0.002021257	0	0.002021
7451041451	574510	4145180	0.00233979	0	0.00234
7452041451	574520	4145180	0.00271014	0	0.00271
7453041451	574530	4145180	0.003113427	0	0.003113
7445041451	574450	4145190	0.003573351	0	0.003573
7446041451	574460	4145190	0.004108792	0	0.004109
7447041451	574470	4145190	0.004793657	0	0.004794
7448041451	574480	4145190	0.005407827	0	0.005408
7449041451	574490	4145190	0.005770947	0	0.005771
7450041451	574500	4145190	0.005837224	0	0.005837
7451041451	574510	4145190	0.005823567	0	0.005824
7452041451	574520	4145190	0.005772955	0	0.005773
7444041452	574440	4145200	0.00543956	0	0.00544
7445041452	574450	4145200	0.004932639	0	0.004933
7446041452	574460	4145200	0.004354219	0	0.004354
7447041452	574470	4145200	0.003784234	0	0.003784
7448041452	574480	4145200	0.001621987	0	0.001622
7449041452	574490	4145200	0.001815597	0	0.001816
7450041452	574500	4145200	0.00209838	0	0.002098
7451041452	574510	4145200	0.002467926	0	0.002468
7443041452	574430	4145210	0.002934679	0	0.002935
7444041452	574440	4145210	0.003504664	0	0.003505
7445041452	574450	4145210	0.004039703	0	0.00404
7446041452	574460	4145210	0.004931434	0	0.004931
7447041452	574470	4145210	0.005954113	0	0.005954
7448041452	574480	4145210	0.007043069	0	0.007043
7449041452	574490	4145210	0.007978985	0	0.007979
7450041452	574500	4145210	0.008379863	0	0.00838
7451041452	574510	4145210	0.008369419	0	0.008369
7443041452	574430	4145220	0.008271409	0	0.008271
7444041452	574440	4145220	0.007595782	0	0.007596
7445041452	574450	4145220	0.006665088	0	0.006665
7446041452	574460	4145220	0.005644819	0	0.005645
7447041452	574470	4145220	0.004710911	0	0.004711
7448041452	574480	4145220	0.001676214	0	0.001676
7449041452	574490	4145220	0.001889506	0	0.00189
7450041452	574500	4145220	0.002203219	0	0.002203
7451041452	574510	4145220	0.00262177	0	0.002622
7452041452	574520	4145220	0.003130699	0	0.003131
7453041452	574530	4145220	0.003691847	0	0.003692
7444041452	574440	4145230	0.004598842	0	0.004599
7445041452	574450	4145230	0.005934832	0	0.005935

Max GLC for Chronic Calcs

Max GLC: 0.073931

XY	X	Y	2025	2026	2027	2034	2035
57449041451	574490	4145130	0	0	0	9.898E-05	4.714E-05
57448041451	574480	4145140	0	0	0	0.0001094	5.211E-05
57449041451	574490	4145140	0	0	0	0.0001255	5.976E-05
57449041451	574490	4145150	0	0	0	0.0001426	6.789E-05
57450041451	574500	4145150	0	0	0	0.0001646	7.836E-05
57446041451	574460	4145160	0	0	0	0.0001846	8.79E-05
57449041451	574490	4145160	0	0	0	0.0002038	9.706E-05
57450041451	574500	4145160	0	0	0	0.0002263	0.0001077
57451041451	574510	4145160	0	0	0	0.0002547	0.0001213
57446041451	574460	4145170	0	0	0	0.0002763	0.0001316
57447041451	574470	4145170	0	0	0	0.0002852	0.0001358
57448041451	574480	4145170	0	0	0	0.000283	0.0001347
57449041451	574490	4145170	0	0	0	0.0002859	0.0001362
57450041451	574500	4145170	0	0	0	0.0002836	0.0001351
57451041451	574510	4145170	0	0	0	0.00027	0.0001286
57452041451	574520	4145170	0	0	0	0.0002515	0.0001198
57446041451	574460	4145180	0	0	0	0.0002234	0.0001064
57447041451	574470	4145180	0	0	0	0.0002	9.522E-05
57448041451	574480	4145180	0	0	0	0.0001041	4.955E-05
57449041451	574490	4145180	0	0	0	0.0001144	5.446E-05
57450041451	574500	4145180	0	0	0	0.0001331	6.34E-05
57451041451	574510	4145180	0	0	0	0.0001541	7.339E-05
57452041451	574520	4145180	0	0	0	0.0001785	8.501E-05
57453041451	574530	4145180	0	0	0	0.0002051	9.766E-05
57445041451	574450	4145190	0	0	0	0.0002354	0.0001121
57446041451	574460	4145190	0	0	0	0.0002707	0.0001289
57447041451	574470	4145190	0	0	0	0.0003158	0.0001504
57448041451	574480	4145190	0	0	0	0.0003562	0.0001696
57449041451	574490	4145190	0	0	0	0.0003801	0.000181
57450041451	574500	4145190	0	0	0	0.0003845	0.0001831
57451041451	574510	4145190	0	0	0	0.0003836	0.0001827
57452041451	574520	4145190	0	0	0	0.0003803	0.0001811
57444041452	574440	4145200	0	0	0	0.0003583	0.0001706
57445041452	574450	4145200	0	0	0	0.0003249	0.0001547
57446041452	574460	4145200	0	0	0	0.0002868	0.0001366
57447041452	574470	4145200	0	0	0	0.0002493	0.0001187
57448041452	574480	4145200	0	0	0	0.0001068	5.088E-05
57449041452	574490	4145200	0	0	0	0.0001196	5.695E-05
57450041452	574500	4145200	0	0	0	0.0001382	6.582E-05
57451041452	574510	4145200	0	0	0	0.0001626	7.741E-05
57443041452	574430	4145210	0	0	0	0.0001933	9.205E-05
57444041452	574440	4145210	0	0	0	0.0002309	0.0001099
57445041452	574450	4145210	0	0	0	0.0002661	0.0001267
57446041452	574460	4145210	0	0	0	0.0003248	0.0001547
57447041452	574470	4145210	0	0	0	0.0003922	0.0001868
57448041452	574480	4145210	0	0	0	0.0004639	0.0002209
57449041452	574490	4145210	0	0	0	0.0005256	0.0002503
57450041452	574500	4145210	0	0	0	0.000552	0.0002629
57451041452	574510	4145210	0	0	0	0.0005513	0.0002625
57443041452	574430	4145220	0	0	0	0.0005449	0.0002595
57444041452	574440	4145220	0	0	0	0.0005003	0.0002383
57445041452	574450	4145220	0	0	0	0.000439	0.0002091
57446041452	574460	4145220	0	0	0	0.0003718	0.0001771
57447041452	574470	4145220	0	0	0	0.0003103	0.0001478
57448041452	574480	4145220	0	0	0	0.0001104	5.258E-05
57449041452	574490	4145220	0	0	0	0.0001245	5.927E-05
57450041452	574500	4145220	0	0	0	0.0001451	6.911E-05
57451041452	574510	4145220	0	0	0	0.0001727	8.224E-05
57452041452	574520	4145220	0	0	0	0.0002062	9.82E-05
57453041452	574530	4145220	0	0	0	0.0002432	0.0001158
57444041452	574440	4145230	0	0	0	0.0003029	0.0001443
57445041452	574450	4145230	0	0	0	0.0003909	0.0001862

Garvey Reservoir Rehab - Unmitigated Proposed Pump Station

Cancer Risk Summary & Maximum Annual GLC for Chronic Calculations

Cancer Risk Summary

323

Max Risk: 1.12234

XY	X	Y	Offroad Risk	Haul Risk	Total Risk
7446041452	574460	4145230	0.00766929	0	0.007669
7447041452	574470	4145230	0.009553172	0	0.009553
7448041452	574480	4145230	0.011543098	0	0.011543
7449041452	574490	4145230	0.013242609	0	0.013243
7450041452	574500	4145230	0.013326561	0	0.013327
7451041452	574510	4145230	0.013042171	0	0.013042
7452041452	574520	4145230	0.011412954	0	0.011413
7444041452	574440	4145240	0.009390491	0	0.00939
7445041452	574450	4145240	0.007473671	0	0.007474
7446041452	574460	4145240	0.005874982	0	0.005875
7447041452	574470	4145240	0.00170875	0	0.001709
7448041452	574480	4145240	0.001971449	0	0.001971
7449041452	574490	4145240	0.00228717	0	0.002287
7450041452	574500	4145240	0.00271496	0	0.002715
7451041452	574510	4145240	0.003229513	0	0.00323
7445041452	574450	4145250	0.003971819	0	0.003972
7446041452	574460	4145250	0.005168827	0	0.005169
7447041452	574470	4145250	0.006936624	0	0.006937
7448041452	574480	4145250	0.00950256	0	0.009503
7446041452	574460	4145260	0.013073903	0	0.013074
7447041452	574470	4145260	0.017624142	0	0.017624
7448041452	574480	4145260	0.022721069	0	0.022721
7447041452	574470	4145270	0.024655965	0	0.024656
7449041451	574490	4145130	0.023463375	0	0.023463
7448041451	574480	4145140	0.018866541	0	0.018867
7449041451	574490	4145140	0.013861198	0	0.013861
7449041451	574490	4145150	0.010060896	0	0.010061
7450041451	574500	4145150	0.007398557	0	0.007399
7446041451	574460	4145160	0.001726424	0	0.001726
7449041451	574490	4145160	0.001999567	0	0.002
7450041451	574500	4145160	0.0023422	0	0.002342
7451041451	574510	4145160	0.00276999	0	0.00277
7446041451	574460	4145170	0.003335155	0	0.003335
7447041451	574470	4145170	0.051843321	0	0.051843
7448041451	574480	4145170	0.034980364	0	0.03498
7449041451	574490	4145170	0.021158932	0	0.021159
7450041451	574500	4145170	0.013445056	0	0.013445
7451041451	574510	4145170	0.009059105	0	0.009059
7452041451	574520	4145170	0.001719595	0	0.00172
7446041451	574460	4145180	0.002000772	0	0.002001
7447041451	574470	4145180	0.002349029	0	0.002349
7448041451	574480	4145180	0.002778024	0	0.002778
7449041451	574490	4145180	0.185647982	0	0.185648
7450041451	574500	4145180	0.065852739	0	0.065853
7451041451	574510	4145180	0.029911555	0	0.029912
7452041451	574520	4145180	0.017130477	0	0.01713
7453041451	574530	4145180	0.010454142	0	0.010454
7445041451	574450	4145190	0.001733654	0	0.001734
7446041451	574460	4145190	0.001985106	0	0.001985
7447041451	574470	4145190	0.002329346	0	0.002329
7448041451	574480	4145190	0.002788869	0	0.002789
7449041451	574490	4145190	0.966907703	0	0.966908
7450041451	574500	4145190	0.119916551	0	0.119917
7451041451	574510	4145190	0.042546421	0	0.042546
7452041451	574520	4145190	0.021296307	0	0.021296
7444041452	574440	4145200	0.012382209	0	0.012382
7445041452	574450	4145200	0.00171839	0	0.001718
7446041452	574460	4145200	0.001974261	0	0.001974
7447041452	574470	4145200	0.002312877	0	0.002313
7448041452	574480	4145200	0.002744684	0	0.002745
7449041452	574490	4145200	0.368220295	0	0.36822
7450041452	574500	4145200	0.12169921	0	0.121699

Max GLC for Chronic Calcs

Max GLC: 0.073931

XY	X	Y	2025	2026	2027	2034	2035
57446041452	574460	4145230	0	0	0	0.0005052	0.0002406
57447041452	574470	4145230	0	0	0	0.0006293	0.0002997
57448041452	574480	4145230	0	0	0	0.0007604	0.0003621
57449041452	574490	4145230	0	0	0	0.0008723	0.0004154
57450041452	574500	4145230	0	0	0	0.0008778	0.000418
57451041452	574510	4145230	0	0	0	0.0008591	0.0004091
57452041452	574520	4145230	0	0	0	0.0007518	0.000358
57444041452	574440	4145240	0	0	0	0.0006186	0.0002946
57445041452	574450	4145240	0	0	0	0.0004923	0.0002344
57446041452	574460	4145240	0	0	0	0.000387	0.0001843
57447041452	574470	4145240	0	0	0	0.0001126	5.36E-05
57448041452	574480	4145240	0	0	0	0.0001299	6.184E-05
57449041452	574490	4145240	0	0	0	0.0001507	7.174E-05
57450041452	574500	4145240	0	0	0	0.0001788	8.516E-05
57451041452	574510	4145240	0	0	0	0.0002127	0.0001013
57445041452	574450	4145250	0	0	0	0.0002616	0.0001246
57446041452	574460	4145250	0	0	0	0.0003405	0.0001621
57447041452	574470	4145250	0	0	0	0.0004569	0.0002176
57448041452	574480	4145250	0	0	0	0.000626	0.0002981
57446041452	574460	4145260	0	0	0	0.0008612	0.0004101
57447041452	574470	4145260	0	0	0	0.0011609	0.0005528
57448041452	574480	4145260	0	0	0	0.0014967	0.0007127
57447041452	574470	4145270	0	0	0	0.0016241	0.0007734
57449041451	574490	4145130	0	0	0	0.0015456	0.000736
57448041451	574480	4145140	0	0	0	0.0012428	0.0005918
57449041451	574490	4145140	0	0	0	0.0009131	0.0004348
57449041451	574490	4145150	0	0	0	0.0006627	0.0003156
57450041451	574500	4145150	0	0	0	0.0004874	0.0002321
57446041451	574460	4145160	0	0	0	0.0001137	5.415E-05
57449041451	574490	4145160	0	0	0	0.0001317	6.272E-05
57450041451	574500	4145160	0	0	0	0.0001543	7.347E-05
57451041451	574510	4145160	0	0	0	0.0001825	8.689E-05
57446041451	574460	4145170	0	0	0	0.0002197	0.0001046
57447041451	574470	4145170	0	0	0	0.003415	0.0016262
57448041451	574480	4145170	0	0	0	0.0023042	0.0010972
57449041451	574490	4145170	0	0	0	0.0013938	0.0006637
57450041451	574500	4145170	0	0	0	0.0008856	0.0004217
57451041451	574510	4145170	0	0	0	0.0005967	0.0002842
57452041451	574520	4145170	0	0	0	0.0001133	5.394E-05
57446041451	574460	4145180	0	0	0	0.0001318	6.276E-05
57447041451	574470	4145180	0	0	0	0.0001547	7.368E-05
57448041451	574480	4145180	0	0	0	0.000183	8.714E-05
57449041451	574490	4145180	0	0	0	0.012229	0.0058233
57450041451	574500	4145180	0	0	0	0.0043378	0.0020656
57451041451	574510	4145180	0	0	0	0.0019703	0.0009383
57452041451	574520	4145180	0	0	0	0.0011284	0.0005373
57453041451	574530	4145180	0	0	0	0.0006886	0.0003279
57445041451	574450	4145190	0	0	0	0.0001142	5.438E-05
57446041451	574460	4145190	0	0	0	0.0001308	6.227E-05
57447041451	574470	4145190	0	0	0	0.0001534	7.307E-05
57448041451	574480	4145190	0	0	0	0.0001837	8.748E-05
57449041451	574490	4145190	0	0	0	0.0636919	0.0303295
57450041451	574500	4145190	0	0	0	0.0078991	0.0037615
57451041451	574510	4145190	0	0	0	0.0028026	0.0013346
57452041451	574520	4145190	0	0	0	0.0014028	0.000668
57444041452	574440	4145200	0	0	0	0.0008156	0.0003884
57445041452	574450	4145200	0	0	0	0.0001132	5.39E-05
57446041452	574460	4145200	0	0	0	0.00013	6.193E-05
57447041452	574470	4145200	0	0	0	0.0001524	7.255E-05
57448041452	574480	4145200	0	0	0	0.0001808	8.609E-05
57449041452	574490	4145200	0	0	0	0.0242553	0.0115502
57450041452	574500	4145200	0	0	0	0.0080165	0.0038174

Garvey Reservoir Rehab - Unmitigated Proposed Pump Station

Cancer Risk Summary & Maximum Annual GLC for Chronic Calculations

Cancer Risk Summary

323

Max Risk: 1.12234

XY	X	Y	Offroad Risk	Haul Risk	Total Risk
7451041452(	574510	4145200	0.048012894	0	0.048013
7443041452:	574430	4145210	0.024864035	0	0.024864
7444041452:	574440	4145210	0.013956396	0	0.013956
7445041452:	574450	4145210	0.001687862	0	0.001688
7446041452:	574460	4145210	0.001924452	0	0.001924
7447041452:	574470	4145210	0.002247805	0	0.002248
7448041452:	574480	4145210	0.002661536	0	0.002662
7449041452:	574490	4145210	0.103580197	0	0.10358
7450041452:	574500	4145210	0.121619275	0	0.121619
7451041452:	574510	4145210	0.082508831	0	0.082509
7443041452:	574430	4145220	0.043332912	0	0.043333
7444041452:	574440	4145220	0.024426203	0	0.024426
7445041452:	574450	4145220	0.015444623	0	0.015445
7446041452:	574460	4145220	0.001630422	0	0.00163
7447041452:	574470	4145220	0.001868619	0	0.001869
7448041452:	574480	4145220	0.002166666	0	0.002167
7449041452:	574490	4145220	0.002551476	0	0.002551
7450041452:	574500	4145220	0.031325873	0	0.031326
7451041452:	574510	4145220	0.048422608	0	0.048423
7452041452:	574520	4145220	0.058426064	0	0.058426
7453041452:	574530	4145220	0.051031123	0	0.051031
7444041452:	574440	4145230	0.035541913	0	0.035542
7445041452:	574450	4145230	0.023028756	0	0.023029
7446041452:	574460	4145230	0.015777616	0	0.015778
7447041452:	574470	4145230	0.001572178	0	0.001572
7448041452:	574480	4145230	0.001802341	0	0.001802
7449041452:	574490	4145230	0.002076689	0	0.002077
7450041452:	574500	4145230	0.002413298	0	0.002413
7451041452:	574510	4145230	0.013623001	0	0.013623
7452041452:	574520	4145230	0.02022864	0	0.020229
7444041452(	574440	4145240	0.027858163	0	0.027858
7445041452(	574450	4145240	0.032938219	0	0.032938
7446041452(	574460	4145240	0.031254775	0	0.031255
7447041452(	574470	4145240	0.025091788	0	0.025092
7448041452(	574480	4145240	0.019329277	0	0.019329
7449041452(	574490	4145240	0.013953986	0	0.013954
7450041452(	574500	4145240	0.001509918	0	0.00151
7451041452(	574510	4145240	0.001653318	0	0.001653
7445041452!	574450	4145250	0.001940921	0	0.001941
7446041452!	574460	4145250	0.002263069	0	0.002263
7447041452!	574470	4145250	0.002657921	0	0.002658
7448041452!	574480	4145250	0.004728184	0	0.004728
7446041452(	574460	4145260	0.005977812	0	0.005978
7447041452(	574470	4145260	0.007711868	0	0.007712
7448041452(	574480	4145260	0.01031757	0	0.010318
7447041452:	574470	4145270	0.013768409	0	0.013768
7449041451:	574490	4145130	0.017893268	0	0.017893
7448041451(	574480	4145140	0.020705033	0	0.020705
7449041451(	574490	4145140	0.020914309	0	0.020914
7449041451!	574490	4145150	0.018442366	0	0.018442
7450041451!	574500	4145150	0.01479872	0	0.014799
7446041451(	574460	4145160	0.011655167	0	0.011655
7449041451(	574490	4145160	0.001438017	0	0.001438
7450041451(	574500	4145160	0.001621183	0	0.001621
7451041451(	574510	4145160	0.001832066	0	0.001832
7446041451:	574460	4145170	0.002103602	0	0.002104
7447041451:	574470	4145170	0.002437398	0	0.002437
7448041451:	574480	4145170	0.002852335	0	0.002852
7449041451:	574490	4145170	0.003378135	0	0.003378
7450041451:	574500	4145170	0.004081076	0	0.004081
7451041451:	574510	4145170	0.005015787	0	0.005016
7452041451:	574520	4145170	0.006281081	0	0.006281

Max GLC for Chronic Calcs

Max GLC: 0.073931

XY	X	Y	2025	2026	2027	2034	2035
57451041452(	574510	4145200	0	0	0	0.0031627	0.001506
57443041452:	574430	4145210	0	0	0	0.0016378	0.0007799
57444041452:	574440	4145210	0	0	0	0.0009193	0.0004378
57445041452:	574450	4145210	0	0	0	0.0001112	5.294E-05
57446041452:	574460	4145210	0	0	0	0.0001268	6.037E-05
57447041452:	574470	4145210	0	0	0	0.0001481	7.051E-05
57448041452:	574480	4145210	0	0	0	0.0001753	8.349E-05
57449041452:	574490	4145210	0	0	0	0.006823	0.0032491
57450041452:	574500	4145210	0	0	0	0.0080113	0.0038149
57451041452:	574510	4145210	0	0	0	0.005435	0.0025881
57443041452:	574430	4145220	0	0	0	0.0028544	0.0013592
57444041452:	574440	4145220	0	0	0	0.001609	0.0007662
57445041452:	574450	4145220	0	0	0	0.0010174	0.0004845
57446041452:	574460	4145220	0	0	0	0.0001074	5.114E-05
57447041452:	574470	4145220	0	0	0	0.0001231	5.861E-05
57448041452:	574480	4145220	0	0	0	0.0001427	6.796E-05
57449041452:	574490	4145220	0	0	0	0.0001681	8.003E-05
57450041452:	574500	4145220	0	0	0	0.0020635	0.0009826
57451041452:	574510	4145220	0	0	0	0.0031897	0.0015189
57452041452:	574520	4145220	0	0	0	0.0038486	0.0018327
57453041452:	574530	4145220	0	0	0	0.0033615	0.0016007
57444041452:	574440	4145230	0	0	0	0.0023412	0.0011149
57445041452:	574450	4145230	0	0	0	0.0015169	0.0007224
57446041452:	574460	4145230	0	0	0	0.0010393	0.0004949
57447041452:	574470	4145230	0	0	0	0.0001036	4.932E-05
57448041452:	574480	4145230	0	0	0	0.0001187	5.653E-05
57449041452:	574490	4145230	0	0	0	0.0001368	6.514E-05
57450041452:	574500	4145230	0	0	0	0.000159	7.57E-05
57451041452:	574510	4145230	0	0	0	0.0008974	0.0004273
57452041452:	574520	4145230	0	0	0	0.0013325	0.0006345
57444041452(	574440	4145240	0	0	0	0.0018351	0.0008738
57445041452(	574450	4145240	0	0	0	0.0021697	0.0010332
57446041452(	574460	4145240	0	0	0	0.0020588	0.0009804
57447041452(	574470	4145240	0	0	0	0.0016528	0.0007871
57448041452(	574480	4145240	0	0	0	0.0012733	0.0006063
57449041452(	574490	4145240	0	0	0	0.0009192	0.0004377
57450041452(	574500	4145240	0	0	0	9.946E-05	4.736E-05
57451041452(	574510	4145240	0	0	0	0.0001089	5.186E-05
57445041452!	574450	4145250	0	0	0	0.0001279	6.088E-05
57446041452!	574460	4145250	0	0	0	0.0001491	7.099E-05
57447041452!	574470	4145250	0	0	0	0.0001751	8.337E-05
57448041452!	574480	4145250	0	0	0	0.0003115	0.0001483
57446041452(	574460	4145260	0	0	0	0.0003938	0.0001875
57447041452(	574470	4145260	0	0	0	0.000508	0.0002419
57448041452(	574480	4145260	0	0	0	0.0006796	0.0003236
57447041452:	574470	4145270	0	0	0	0.0009069	0.0004319
57449041451:	574490	4145130	0	0	0	0.0011787	0.0005613
57448041451(	574480	4145140	0	0	0	0.0013639	0.0006495
57449041451(	574490	4145140	0	0	0	0.0013777	0.000656
57449041451!	574490	4145150	0	0	0	0.0012148	0.0005785
57450041451!	574500	4145150	0	0	0	0.0009748	0.0004642
57446041451(	574460	4145160	0	0	0	0.0007677	0.0003656
57449041451(	574490	4145160	0	0	0	9.472E-05	4.511E-05
57450041451(	574500	4145160	0	0	0	0.0001068	5.085E-05
57451041451(	574510	4145160	0	0	0	0.0001207	5.747E-05
57446041451:	574460	4145170	0	0	0	0.0001386	6.598E-05
57447041451:	574470	4145170	0	0	0	0.0001606	7.646E-05
57448041451:	574480	4145170	0	0	0	0.0001879	8.947E-05
57449041451:	574490	4145170	0	0	0	0.0002225	0.000106
57450041451:	574500	4145170	0	0	0	0.0002688	0.000128
57451041451:	574510	4145170	0	0	0	0.0003304	0.0001573
57452041451:	574520	4145170	0	0	0	0.0004137	0.000197

Garvey Reservoir Rehab - Unmitigated Proposed Pump Station

Cancer Risk Summary & Maximum Annual GLC for Chronic Calculations

Cancer Risk Summary

323

Max Risk: 1.12234

XY	X	Y	Offroad Risk	Haul Risk	Total Risk
7446041451	574460	4145180	0.007898649	0	0.007899
7447041451	574470	4145180	0.012387833	0	0.012388
7448041451	574480	4145180	0.014150006	0	0.01415
7449041451	574490	4145180	0.014621981	0	0.014622
7450041451	574500	4145180	0.013661161	0	0.013661
7451041451	574510	4145180	0.011690113	0	0.01169
7452041451	574520	4145180	0.009698179	0	0.009698
7453041451	574530	4145180	0.001373346	0	0.001373
7445041451	574450	4145190	0.001528797	0	0.001529
7446041451	574460	4145190	0.001728834	0	0.001729
7447041451	574470	4145190	0.001953775	0	0.001954
7448041451	574480	4145190	0.002220089	0	0.00222
7449041451	574490	4145190	0.002561919	0	0.002562
7450041451	574500	4145190	0.002998546	0	0.002999
7451041451	574510	4145190	0.003556079	0	0.003556
7452041451	574520	4145190	0.004261029	0	0.004261
7444041452	574440	4145200	0.00515758	0	0.005158
7445041452	574450	4145200	0.006232076	0	0.006232
7446041452	574460	4145200	0.007614259	0	0.007614
7447041452	574470	4145200	0.008999656	0	0.009
7448041452	574480	4145200	0.01005929	0	0.010059
7449041452	574490	4145200	0.010493105	0	0.010493
7450041452	574500	4145200	0.010157702	0	0.010158
7451041452	574510	4145200	0.009186438	0	0.009186
7443041452	574430	4145210	0.007987421	0	0.007987
7444041452	574440	4145210	0.00129542	0	0.001295
7445041452	574450	4145210	0.001442435	0	0.001442
7446041452	574460	4145210	0.001601099	0	0.001601
7447041452	574470	4145210	0.001813588	0	0.001814
7448041452	574480	4145210	0.002044555	0	0.002045
7449041452	574490	4145210	0.002320911	0	0.002321
7450041452	574500	4145210	0.00268403	0	0.002684
7451041452	574510	4145210	0.003173679	0	0.003174
7443041452	574430	4145220	0.00371394	0	0.003714
7444041452	574440	4145220	0.004325298	0	0.004325
7445041452	574450	4145220	0.005072424	0	0.005072
7446041452	574460	4145220	0.005975804	0	0.005976
7447041452	574470	4145220	0.006833794	0	0.006834
7448041452	574480	4145220	0.007559229	0	0.007559
7449041452	574490	4145220	0.007936809	0	0.007937
7450041452	574500	4145220	0.007792204	0	0.007792
7451041452	574510	4145220	0.007291308	0	0.007291
7452041452	574520	4145220	0.006595597	0	0.006596
7453041452	574530	4145220	0.002504077	0	0.002504
7444041452	574440	4145230	0.002733035	0	0.002733
7445041452	574450	4145230	0.002967617	0	0.002968
7446041452	574460	4145230	0.003272894	0	0.003273
7447041452	574470	4145230	0.003541217	0	0.003541
7448041452	574480	4145230	0.003934061	0	0.003934
7449041452	574490	4145230	0.004507661	0	0.004508
7450041452	574500	4145230	0.005043503	0	0.005044
7451041452	574510	4145230	0.005818345	0	0.005818
7452041452	574520	4145230	0.006751449	0	0.006751
7444041452	574440	4145240	0.007790195	0	0.00779
7445041452	574450	4145240	0.009006083	0	0.009006
7446041452	574460	4145240	0.010381839	0	0.010382
7447041452	574470	4145240	0.011869665	0	0.01187
7448041452	574480	4145240	0.013470764	0	0.013471
7449041452	574490	4145240	0.015192367	0	0.015192
7450041452	574500	4145240	0.016823994	0	0.016824
7451041452	574510	4145240	0.018397378	0	0.018397
7445041452	574450	4145250	0.019016368	0	0.019016

Max GLC for Chronic Calcs

Max GLC: 0.073931

XY	X	Y	2025	2026	2027	2034	2035
574460414518	574460	4145180	0	0	0	0.0005203	0.0002478
574470414518	574470	4145180	0	0	0	0.000816	0.0003886
574480414518	574480	4145180	0	0	0	0.0009321	0.0004439
574490414518	574490	4145180	0	0	0	0.0009632	0.0004587
574500414518	574500	4145180	0	0	0	0.0008999	0.0004285
574510414518	574510	4145180	0	0	0	0.00077	0.0003667
574520414518	574520	4145180	0	0	0	0.0006388	0.0003042
574530414518	574530	4145180	0	0	0	9.046E-05	4.308E-05
574450414519	574450	4145190	0	0	0	0.0001007	4.795E-05
574460414519	574460	4145190	0	0	0	0.0001139	5.423E-05
574470414519	574470	4145190	0	0	0	0.0001287	6.129E-05
574480414519	574480	4145190	0	0	0	0.0001462	6.964E-05
574490414519	574490	4145190	0	0	0	0.0001688	8.036E-05
574500414519	574500	4145190	0	0	0	0.0001975	9.406E-05
574510414519	574510	4145190	0	0	0	0.0002342	0.0001115
574520414519	574520	4145190	0	0	0	0.0002807	0.0001337
574440414520	574440	4145200	0	0	0	0.0003397	0.0001618
574450414520	574450	4145200	0	0	0	0.0004105	0.0001955
574460414520	574460	4145200	0	0	0	0.0005016	0.0002388
574470414520	574470	4145200	0	0	0	0.0005928	0.0002823
574480414520	574480	4145200	0	0	0	0.0006626	0.0003155
574490414520	574490	4145200	0	0	0	0.0006912	0.0003291
574500414520	574500	4145200	0	0	0	0.0006691	0.0003186
574510414520	574510	4145200	0	0	0	0.0006051	0.0002882
574430414521	574430	4145210	0	0	0	0.0005261	0.0002505
574440414521	574440	4145210	0	0	0	8.533E-05	4.063E-05
574450414521	574450	4145210	0	0	0	9.502E-05	4.525E-05
574460414521	574460	4145210	0	0	0	0.0001055	5.022E-05
574470414521	574470	4145210	0	0	0	0.0001195	5.689E-05
574480414521	574480	4145210	0	0	0	0.0001347	6.413E-05
574490414521	574490	4145210	0	0	0	0.0001529	7.28E-05
574500414521	574500	4145210	0	0	0	0.0001768	8.419E-05
574510414521	574510	4145210	0	0	0	0.0002091	9.955E-05
574430414522	574430	4145220	0	0	0	0.0002446	0.0001165
574440414522	574440	4145220	0	0	0	0.0002849	0.0001357
574450414522	574450	4145220	0	0	0	0.0003341	0.0001591
574460414522	574460	4145220	0	0	0	0.0003936	0.0001874
574470414522	574470	4145220	0	0	0	0.0004502	0.0002144
574480414522	574480	4145220	0	0	0	0.0004979	0.0002371
574490414522	574490	4145220	0	0	0	0.0005228	0.000249
574500414522	574500	4145220	0	0	0	0.0005133	0.0002444
574510414522	574510	4145220	0	0	0	0.0004803	0.0002287
574520414522	574520	4145220	0	0	0	0.0004345	0.0002069
574530414522	574530	4145220	0	0	0	0.0001649	7.855E-05
574440414523	574440	4145230	0	0	0	0.00018	8.573E-05
574450414523	574450	4145230	0	0	0	0.0001955	9.309E-05
574460414523	574460	4145230	0	0	0	0.0002156	0.0001027
574470414523	574470	4145230	0	0	0	0.0002333	0.0001111
574480414523	574480	4145230	0	0	0	0.0002591	0.0001234
574490414523	574490	4145230	0	0	0	0.0002969	0.0001414
574500414523	574500	4145230	0	0	0	0.0003322	0.0001582
574510414523	574510	4145230	0	0	0	0.0003833	0.0001825
574520414523	574520	4145230	0	0	0	0.0004447	0.0002118
574440414524	574440	4145240	0	0	0	0.0005132	0.0002444
574450414524	574450	4145240	0	0	0	0.0005932	0.0002825
574460414524	574460	4145240	0	0	0	0.0006839	0.0003257
574470414524	574470	4145240	0	0	0	0.0007819	0.0003723
574480414524	574480	4145240	0	0	0	0.0008873	0.0004225
574490414524	574490	4145240	0	0	0	0.0010007	0.0004765
574500414524	574500	4145240	0	0	0	0.0011082	0.0005277
574510414524	574510	4145240	0	0	0	0.0012119	0.0005771
574450414525	574450	4145250	0	0	0	0.0012526	0.0005965

Garvey Reservoir Rehab - Unmitigated Proposed Pump Station

Cancer Risk Summary & Maximum Annual GLC for Chronic Calculations

Cancer Risk Summary

323

Max Risk: 1.12234

XY	X	Y	Offroad Risk	Haul Risk	Total Risk
7446041452	574460	4145250	0.018972183	0	0.018972
7447041452	574470	4145250	0.018552828	0	0.018553
7448041452	574480	4145250	0.018143114	0	0.018143
7446041452	574460	4145260	0.01673683	0	0.016737
7447041452	574470	4145260	0.002541835	0	0.002542
7448041452	574480	4145260	0.002764768	0	0.002765
7447041452	574470	4145270	0.003007785	0	0.003008
7449041451	574490	4145130	0.003287355	0	0.003287
7448041451	574480	4145140	0.003642842	0	0.003643
7449041451	574490	4145140	0.004093528	0	0.004094
7449041451	574490	4145150	0.004702476	0	0.004702
7450041451	574500	4145150	0.005350789	0	0.005351
7446041451	574460	4145160	0.006202352	0	0.006202
7449041451	574490	4145160	0.007226236	0	0.007226
7450041451	574500	4145160	0.008459396	0	0.008459
7451041451	574510	4145160	0.010002653	0	0.010003
7446041451	574460	4145170	0.011827488	0	0.011827
7447041451	574470	4145170	0.013936312	0	0.013936
7448041451	574480	4145170	0.016336354	0	0.016336
7449041451	574490	4145170	0.019034845	0	0.019035
7450041451	574500	4145170	0.021805237	0	0.021805
7451041451	574510	4145170	0.02477205	0	0.024772
7452041451	574520	4145170	0.026554308	0	0.026554
7446041451	574460	4145180	0.026761173	0	0.026761
7447041451	574470	4145180	0.02595018	0	0.02595
7448041451	574480	4145180	0.025081746	0	0.025082
7449041451	574490	4145180	0.022521032	0	0.022521
7450041451	574500	4145180	0.002572363	0	0.002572
7451041451	574510	4145180	0.002810158	0	0.00281
7452041451	574520	4145180	0.003037108	0	0.003037
7453041451	574530	4145180	0.003352025	0	0.003352
7445041451	574450	4145190	0.00373322	0	0.003733
7446041451	574460	4145190	0.004291958	0	0.004292
7447041451	574470	4145190	0.004892471	0	0.004892
7448041451	574480	4145190	0.005615496	0	0.005615
7449041451	574490	4145190	0.006523696	0	0.006524
7450041451	574500	4145190	0.007664871	0	0.007665
7451041451	574510	4145190	0.009096059	0	0.009096
7452041451	574520	4145190	0.010957046	0	0.010957
7444041452	574440	4145200	0.01330005	0	0.0133
7445041452	574450	4145200	0.016126677	0	0.016127
7446041452	574460	4145200	0.019554218	0	0.019554
7447041452	574470	4145200	0.024098432	0	0.024098
7448041452	574480	4145200	0.029531967	0	0.029532
7449041452	574490	4145200	0.034924932	0	0.034925
7450041452	574500	4145200	0.039218898	0	0.039219
7451041452	574510	4145200	0.040644865	0	0.040645
7443041452	574430	4145210	0.035798587	0	0.035799
7444041452	574440	4145210	0.03167413	0	0.031674
7445041452	574450	4145210	0.002592046	0	0.002592
7446041452	574460	4145210	0.002796501	0	0.002797
7447041452	574470	4145210	0.003073661	0	0.003074
7448041452	574480	4145210	0.003426738	0	0.003427
7449041452	574490	4145210	0.05793039	0	0.05793
7450041452	574500	4145210	0.046858062	0	0.046858
7451041452	574510	4145210	0.002604096	0	0.002604
7443041452	574430	4145220	0.002813773	0	0.002814
7444041452	574440	4145220	0.003106599	0	0.003107
7445041452	574450	4145220	0.102758358	0	0.102758
7446041452	574460	4145220	0.072668457	0	0.072668
7447041452	574470	4145220	0.002584815	0	0.002585
7448041452	574480	4145220	0.002826225	0	0.002826

Max GLC for Chronic Calcs

Max GLC: 0.073931

XY	X	Y	2025	2026	2027	2034	2035
57446041452	574460	4145250	0	0	0	0.0012497	0.0005951
57447041452	574470	4145250	0	0	0	0.0012221	0.000582
57448041452	574480	4145250	0	0	0	0.0011951	0.0005691
57446041452	574460	4145260	0	0	0	0.0011025	0.000525
57447041452	574470	4145260	0	0	0	0.0001674	7.973E-05
57448041452	574480	4145260	0	0	0	0.0001821	8.672E-05
57447041452	574470	4145270	0	0	0	0.0001981	9.435E-05
57449041451	574490	4145130	0	0	0	0.0002165	0.0001031
57448041451	574480	4145140	0	0	0	0.00024	0.0001143
57449041451	574490	4145140	0	0	0	0.0002696	0.0001284
57449041451	574490	4145150	0	0	0	0.0003098	0.0001475
57450041451	574500	4145150	0	0	0	0.0003525	0.0001678
57446041451	574460	4145160	0	0	0	0.0004086	0.0001946
57449041451	574490	4145160	0	0	0	0.000476	0.0002267
57450041451	574500	4145160	0	0	0	0.0005572	0.0002654
57451041451	574510	4145160	0	0	0	0.0006589	0.0003138
57446041451	574460	4145170	0	0	0	0.0007791	0.000371
57447041451	574470	4145170	0	0	0	0.000918	0.0004371
57448041451	574480	4145170	0	0	0	0.0010761	0.0005124
57449041451	574490	4145170	0	0	0	0.0012539	0.0005971
57450041451	574500	4145170	0	0	0	0.0014363	0.000684
57451041451	574510	4145170	0	0	0	0.0016318	0.000777
57452041451	574520	4145170	0	0	0	0.0017492	0.0008329
57446041451	574460	4145180	0	0	0	0.0017628	0.0008394
57447041451	574470	4145180	0	0	0	0.0017094	0.000814
57448041451	574480	4145180	0	0	0	0.0016522	0.0007868
57449041451	574490	4145180	0	0	0	0.0014835	0.0007064
57450041451	574500	4145180	0	0	0	0.0001694	8.069E-05
57451041451	574510	4145180	0	0	0	0.0001851	8.815E-05
57452041451	574520	4145180	0	0	0	0.0002001	9.527E-05
57453041451	574530	4145180	0	0	0	0.0002208	0.0001051
57445041451	574450	4145190	0	0	0	0.0002459	0.0001171
57446041451	574460	4145190	0	0	0	0.0002827	0.0001346
57447041451	574470	4145190	0	0	0	0.0003223	0.0001535
57448041451	574480	4145190	0	0	0	0.0003699	0.0001761
57449041451	574490	4145190	0	0	0	0.0004297	0.0002046
57450041451	574500	4145190	0	0	0	0.0005049	0.0002404
57451041451	574510	4145190	0	0	0	0.0005992	0.0002853
57452041451	574520	4145190	0	0	0	0.0007218	0.0003437
57444041452	574440	4145200	0	0	0	0.0008761	0.0004172
57445041452	574450	4145200	0	0	0	0.0010623	0.0005059
57446041452	574460	4145200	0	0	0	0.0012881	0.0006134
57447041452	574470	4145200	0	0	0	0.0015874	0.0007559
57448041452	574480	4145200	0	0	0	0.0019453	0.0009263
57449041452	574490	4145200	0	0	0	0.0023006	0.0010955
57450041452	574500	4145200	0	0	0	0.0025834	0.0012302
57451041452	574510	4145200	0	0	0	0.0026773	0.0012749
57443041452	574430	4145210	0	0	0	0.0023581	0.0011229
57444041452	574440	4145210	0	0	0	0.0020864	0.0009935
57445041452	574450	4145210	0	0	0	0.0001707	8.131E-05
57446041452	574460	4145210	0	0	0	0.0001842	8.772E-05
57447041452	574470	4145210	0	0	0	0.0002025	9.641E-05
57448041452	574480	4145210	0	0	0	0.0002257	0.0001075
57449041452	574490	4145210	0	0	0	0.003816	0.0018171
57450041452	574500	4145210	0	0	0	0.0030866	0.0014698
57451041452	574510	4145210	0	0	0	0.0001715	8.168E-05
57443041452	574430	4145220	0	0	0	0.0001853	8.826E-05
57444041452	574440	4145220	0	0	0	0.0002046	9.745E-05
57445041452	574450	4145220	0	0	0	0.0067689	0.0032233
57446041452	574460	4145220	0	0	0	0.0047868	0.0022794
57447041452	574470	4145220	0	0	0	0.0001703	8.108E-05
57448041452	574480	4145220	0	0	0	0.0001862	8.865E-05

Garvey Reservoir Rehab - Unmitigated Proposed Pump Station

Cancer Risk Summary & Maximum Annual GLC for Chronic Calculations

Cancer Risk Summary

323

Max Risk: 1.12234

XY	X	Y	Offroad Risk	Haul Risk	Total Risk
7449041452	574490	4145220	0.193540204	0	0.19354
7450041452	574500	4145220	0.109590947	0	0.109591
7451041452	574510	4145220	0.002582004	0	0.002582
7452041452	574520	4145220	0.002834259	0	0.002834
7453041452	574530	4145220	0.470072461	0	0.470072
7444041452	574440	4145230	0.180941489	0	0.180941
7445041452	574450	4145230	0.002577183	0	0.002577
7446041452	574460	4145230	0.002833456	0	0.002833
7447041452	574470	4145230	0.771964829	0	0.771965
7448041452	574480	4145230	0.233427901	0	0.233428
7449041452	574490	4145230	0.00258602	0	0.002586
7450041452	574500	4145230	0.002812167	0	0.002812
7451041452	574510	4145230	1.122340459	0	1.12234
7452041452	574520	4145230	0.532441022	0	0.532441
7444041452	574440	4145240	0.230220079	0	0.23022
7445041452	574450	4145240	0.002555894	0	0.002556
7446041452	574460	4145240	0.002781237	0	0.002781
7447041452	574470	4145240	0.300943196	0	0.300943
7448041452	574480	4145240	0.348590963	0	0.348591
7449041452	574490	4145240	0.296977403	0	0.296977
7450041452	574500	4145240	0.184559026	0	0.184559
7451041452	574510	4145240	0.002518136	0	0.002518
7445041452	574450	4145250	0.002740266	0	0.00274
7446041452	574460	4145250	0.160296306	0	0.160296
7447041452	574470	4145250	0.166833258	0	0.166833
7448041452	574480	4145250	0.154870805	0	0.154871
7446041452	574460	4145260	0.121212774	0	0.121213
7447041452	574470	4145260	0.002469533	0	0.00247
7448041452	574480	4145260	0.002691261	0	0.002691
7447041452	574470	4145270	0.073074556	0	0.073075
7457041450	574570	4145030	0.096965319	0	0.096965
7463041450	574630	4145080	0.114525192	0	0.114525
7461041450	574610	4145090	0.112998404	0	0.112998
7462041450	574620	4145090	0.095013954	0	0.095014
7463041450	574630	4145090	0.002424946	0	0.002425
7464041450	574640	4145090	0.002635829	0	0.002636
7460041451	574600	4145100	0.002895716	0	0.002896
7461041451	574610	4145100	0.039650705	0	0.039651
7462041451	574620	4145100	0.051920845	0	0.051921
7463041451	574630	4145100	0.064793908	0	0.064794
7464041451	574640	4145100	0.074751573	0	0.074752
7465041451	574650	4145100	0.07685156	0	0.076852
7459041451	574590	4145110	0.070909095	0	0.070909
7460041451	574600	4145110	0.002368309	0	0.002368
7461041451	574610	4145110	0.002571962	0	0.002572
7462041451	574620	4145110	0.002816183	0	0.002816
7463041451	574630	4145110	0.024422588	0	0.024423
7464041451	574640	4145110	0.03085912	0	0.030859
7465041451	574650	4145110	0.0385501	0	0.03855
7466041451	574660	4145110	0.046271206	0	0.046271
7460041451	574600	4145120	0.052089953	0	0.05209
7461041451	574610	4145120	0.054154993	0	0.054155
7462041451	574620	4145120	0.051748926	0	0.051749
7463041451	574630	4145120	0.002316894	0	0.002317
7464041451	574640	4145120	0.002503676	0	0.002504
7465041451	574650	4145120	0.002730625	0	0.002731
7466041451	574660	4145120	0.01601742	0	0.016017
7460041451	574600	4145130	0.020078813	0	0.020079
7462041451	574620	4145130	0.024519795	0	0.02452
7463041451	574630	4145130	0.029678178	0	0.029678
7464041451	574640	4145130	0.034811256	0	0.034811
7465041451	574650	4145130	0.038883093	0	0.038883

Max GLC for Chronic Calcs

Max GLC: 0.073931

XY	X	Y	2025	2026	2027	2034	2035
57449041452	574490	4145220	0	0	0	0.0127488	0.0060709
57450041452	574500	4145220	0	0	0	0.0072189	0.0034376
57451041452	574510	4145220	0	0	0	0.0001701	8.099E-05
57452041452	574520	4145220	0	0	0	0.0001867	8.89E-05
57453041452	574530	4145220	0	0	0	0.0309645	0.014745
57444041452	574440	4145230	0	0	0	0.0119189	0.0056757
57445041452	574450	4145230	0	0	0	0.0001698	8.084E-05
57446041452	574460	4145230	0	0	0	0.0001866	8.888E-05
57447041452	574470	4145230	0	0	0	0.0508507	0.0242146
57448041452	574480	4145230	0	0	0	0.0153763	0.0073221
57449041452	574490	4145230	0	0	0	0.0001703	8.112E-05
57450041452	574500	4145230	0	0	0	0.0001852	8.821E-05
57451041452	574510	4145230	0	0	0	0.0739305	0.035205
57452041452	574520	4145230	0	0	0	0.0350728	0.0167013
57444041452	574440	4145240	0	0	0	0.015165	0.0072214
57445041452	574450	4145240	0	0	0	0.0001684	8.017E-05
57446041452	574460	4145240	0	0	0	0.0001832	8.724E-05
57447041452	574470	4145240	0	0	0	0.0198237	0.0094398
57448041452	574480	4145240	0	0	0	0.0229623	0.0109344
57449041452	574490	4145240	0	0	0	0.0195624	0.0093154
57450041452	574500	4145240	0	0	0	0.0121572	0.0057892
57451041452	574510	4145240	0	0	0	0.0001659	7.899E-05
57445041452	574450	4145250	0	0	0	0.0001805	8.596E-05
57446041452	574460	4145250	0	0	0	0.010559	0.0050281
57447041452	574470	4145250	0	0	0	0.0109896	0.0052331
57448041452	574480	4145250	0	0	0	0.0102016	0.0048579
57446041452	574460	4145260	0	0	0	0.0079845	0.0038021
57447041452	574470	4145260	0	0	0	0.0001627	7.746E-05
57448041452	574480	4145260	0	0	0	0.0001773	8.442E-05
57447041452	574470	4145270	0	0	0	0.0048135	0.0022922
57457041450	574570	4145030	0	0	0	0.0063873	0.0030416
57463041450	574630	4145080	0	0	0	0.007544	0.0035924
57461041450	574610	4145090	0	0	0	0.0074434	0.0035445
57462041450	574620	4145090	0	0	0	0.0062587	0.0029804
57463041450	574630	4145090	0	0	0	0.0001597	7.606E-05
57464041450	574640	4145090	0	0	0	0.0001736	8.268E-05
57460041451	574600	4145100	0	0	0	0.0001907	9.083E-05
57461041451	574610	4145100	0	0	0	0.0026119	0.0012437
57462041451	574620	4145100	0	0	0	0.0034201	0.0016286
57463041451	574630	4145100	0	0	0	0.0042681	0.0020324
57464041451	574640	4145100	0	0	0	0.004924	0.0023448
57465041451	574650	4145100	0	0	0	0.0050623	0.0024106
57459041451	574590	4145110	0	0	0	0.0046709	0.0022242
57460041451	574600	4145110	0	0	0	0.000156	7.429E-05
57461041451	574610	4145110	0	0	0	0.0001694	8.068E-05
57462041451	574620	4145110	0	0	0	0.0001855	8.834E-05
57463041451	574630	4145110	0	0	0	0.0016088	0.0007661
57464041451	574640	4145110	0	0	0	0.0020327	0.000968
57465041451	574650	4145110	0	0	0	0.0025394	0.0012092
57466041451	574660	4145110	0	0	0	0.003048	0.0014514
57460041451	574600	4145120	0	0	0	0.0034313	0.0016339
57461041451	574610	4145120	0	0	0	0.0035673	0.0016987
57462041451	574620	4145120	0	0	0	0.0034088	0.0016232
57463041451	574630	4145120	0	0	0	0.0001526	7.268E-05
57464041451	574640	4145120	0	0	0	0.0001649	7.853E-05
57465041451	574650	4145120	0	0	0	0.0001799	8.565E-05
57466041451	574660	4145120	0	0	0	0.0010551	0.0005024
57460041451	574600	4145130	0	0	0	0.0013226	0.0006298
57462041451	574620	4145130	0	0	0	0.0016152	0.0007691
57463041451	574630	4145130	0	0	0	0.001955	0.0009309
57464041451	574640	4145130	0	0	0	0.0022931	0.0010919
57465041451	574650	4145130	0	0	0	0.0025613	0.0012197

Garvey Reservoir Rehab - Unmitigated Proposed Pump Station

Cancer Risk Summary & Maximum Annual GLC for Chronic Calculations

Cancer Risk Summary

323

Max Risk: 1.12234

XY	X	Y	Offroad Risk	Haul Risk	Total Risk
74630414514	574630	4145140	0.040393011	0	0.040393
74640414514	574640	4145140	0.039426567	0	0.039427
74590414515	574590	4145150	0.002251019	0	0.002251
74600414515	574600	4145150	0.002428562	0	0.002429
74600414516	574600	4145160	0.002642657	0	0.002643
74610414516	574610	4145160	0.009587717	0	0.009588
74610414517	574610	4145170	0.011321772	0	0.011322
74570414503	574570	4145030	0.013597695	0	0.013598
74630414508	574630	4145080	0.01650988	0	0.01651
74610414509	574610	4145090	0.019893237	0	0.019893
74620414509	574620	4145090	0.023431642	0	0.023432
74630414509	574630	4145090	0.026885694	0	0.026886
74640414509	574640	4145090	0.029682195	0	0.029682
74600414510	574600	4145100	0.031262809	0	0.031263
74610414510	574610	4145100	0.031172832	0	0.031173
74620414510	574620	4145100	0.002183135	0	0.002183
74630414510	574630	4145100	0.002352644	0	0.002353
74640414510	574640	4145100	0.002549467	0	0.002549
74650414510	574650	4145100	0.002784451	0	0.002784
74590414511	574590	4145110	0.007416632	0	0.007417
74600414511	574600	4145110	0.008575481	0	0.008575
74610414511	574610	4145110	0.009970117	0	0.00997
74620414511	574620	4145110	0.011740725	0	0.011741
74630414511	574630	4145110	0.013829063	0	0.013829
74640414511	574640	4145110	0.016426732	0	0.016427
74650414511	574650	4145110	0.01894527	0	0.018945
74660414511	574660	4145110	0.021378652	0	0.021379
74600414512	574600	4145120	0.023351707	0	0.023352
74610414512	574610	4145120	0.024625437	0	0.024625
74620414512	574620	4145120	0.024882111	0	0.024882
74630414512	574630	4145120	0.002116456	0	0.002116
74640414512	574640	4145120	0.002273914	0	0.002274
74650414512	574650	4145120	0.002461098	0	0.002461
74660414512	574660	4145120	0.002669972	0	0.00267
74600414513	574600	4145130	0.002906963	0	0.002907
74620414513	574620	4145130	0.004255004	0	0.004255
74630414513	574630	4145130	0.004744251	0	0.004744
74640414513	574640	4145130	0.005285315	0	0.005285
74650414513	574650	4145130	0.005987452	0	0.005987
74630414514	574630	4145140	0.006797241	0	0.006797
74640414514	574640	4145140	0.007708654	0	0.007709
74590414515	574590	4145150	0.008887989	0	0.008888
74600414515	574600	4145150	0.010250088	0	0.01025
74600414516	574600	4145160	0.011786115	0	0.011786
74610414516	574610	4145160	0.013529811	0	0.01353
74610414517	574610	4145170	0.0156065	0	0.015607
74570414503	574570	4145030	0.017380724	0	0.017381
74630414508	574630	4145080	0.018840431	0	0.01884
74610414509	574610	4145090	0.01984865	0	0.019849
74620414509	574620	4145090	0.020197711	0	0.020198
74630414509	574630	4145090	0.002047768	0	0.002048
74640414509	574640	4145090	0.00219157	0	0.002192
74600414510	574600	4145100	0.002366703	0	0.002367
74610414510	574610	4145100	0.002557099	0	0.002557
74620414510	574620	4145100	0.0027724	0	0.002772
74630414510	574630	4145100	0.003017425	0	0.003017
74640414510	574640	4145100	0.003297799	0	0.003298
74650414510	574650	4145100	0.00361593	0	0.003616
74590414511	574590	4145110	0.003987083	0	0.003987
74600414511	574600	4145110	0.004409249	0	0.004409
74610414511	574610	4145110	0.004897291	0	0.004897
74620414511	574620	4145110	0.005490975	0	0.005491

Max GLC for Chronic Calcs

Max GLC: 0.073931

XY	X	Y	2025	2026	2027	2034	2035
57463041451	574630	4145140	0	0	0	0.0026608	0.001267
57464041451	574640	4145140	0	0	0	0.0025971	0.0012367
57459041451	574590	4145150	0	0	0	0.0001483	7.061E-05
57460041451	574600	4145150	0	0	0	0.00016	7.618E-05
57460041451	574600	4145160	0	0	0	0.0001741	8.289E-05
57461041451	574610	4145160	0	0	0	0.0006316	0.0003007
57461041451	574610	4145170	0	0	0	0.0007458	0.0003551
57457041450	574570	4145030	0	0	0	0.0008957	0.0004265
57463041450	574630	4145080	0	0	0	0.0010875	0.0005179
57461041450	574610	4145090	0	0	0	0.0013104	0.000624
57462041450	574620	4145090	0	0	0	0.0015435	0.000735
57463041450	574630	4145090	0	0	0	0.001771	0.0008433
57464041450	574640	4145090	0	0	0	0.0019552	0.0009311
57460041451	574600	4145100	0	0	0	0.0020593	0.0009806
57461041451	574610	4145100	0	0	0	0.0020534	0.0009778
57462041451	574620	4145100	0	0	0	0.0001438	6.848E-05
57463041451	574630	4145100	0	0	0	0.000155	7.38E-05
57464041451	574640	4145100	0	0	0	0.0001679	7.997E-05
57465041451	574650	4145100	0	0	0	0.0001834	8.734E-05
57459041451	574590	4145110	0	0	0	0.0004885	0.0002326
57460041451	574600	4145110	0	0	0	0.0005649	0.000269
57461041451	574610	4145110	0	0	0	0.0006567	0.0003127
57462041451	574620	4145110	0	0	0	0.0007734	0.0003683
57463041451	574630	4145110	0	0	0	0.0009109	0.0004338
57464041451	574640	4145110	0	0	0	0.0010821	0.0005153
57465041451	574650	4145110	0	0	0	0.001248	0.0005943
57466041451	574660	4145110	0	0	0	0.0014082	0.0006706
57460041451	574600	4145120	0	0	0	0.0015382	0.0007325
57461041451	574610	4145120	0	0	0	0.0016221	0.0007724
57462041451	574620	4145120	0	0	0	0.001639	0.0007805
57463041451	574630	4145120	0	0	0	0.0001394	6.639E-05
57464041451	574640	4145120	0	0	0	0.0001498	7.133E-05
57465041451	574650	4145120	0	0	0	0.0001621	7.72E-05
57466041451	574660	4145120	0	0	0	0.0001759	8.375E-05
57460041451	574600	4145130	0	0	0	0.0001915	9.118E-05
57462041451	574620	4145130	0	0	0	0.0002803	0.0001335
57463041451	574630	4145130	0	0	0	0.0003125	0.0001488
57464041451	574640	4145130	0	0	0	0.0003482	0.0001658
57465041451	574650	4145130	0	0	0	0.0003944	0.0001878
57463041451	574630	4145140	0	0	0	0.0004477	0.0002132
57464041451	574640	4145140	0	0	0	0.0005078	0.0002418
57459041451	574590	4145150	0	0	0	0.0005855	0.0002788
57460041451	574600	4145150	0	0	0	0.0006752	0.0003215
57460041451	574600	4145160	0	0	0	0.0007764	0.0003697
57461041451	574610	4145160	0	0	0	0.0008912	0.0004244
57461041451	574610	4145170	0	0	0	0.001028	0.0004895
57457041450	574570	4145030	0	0	0	0.0011449	0.0005452
57463041450	574630	4145080	0	0	0	0.0012411	0.000591
57461041450	574610	4145090	0	0	0	0.0013075	0.0006226
57462041450	574620	4145090	0	0	0	0.0013305	0.0006336
57463041450	574630	4145090	0	0	0	0.0001349	6.423E-05
57464041450	574640	4145090	0	0	0	0.0001444	6.874E-05
57460041451	574600	4145100	0	0	0	0.0001559	7.424E-05
57461041451	574610	4145100	0	0	0	0.0001684	8.021E-05
57462041451	574620	4145100	0	0	0	0.0001826	8.696E-05
57463041451	574630	4145100	0	0	0	0.0001988	9.465E-05
57464041451	574640	4145100	0	0	0	0.0002172	0.0001034
57465041451	574650	4145100	0	0	0	0.0002382	0.0001134
57459041451	574590	4145110	0	0	0	0.0002626	0.0001251
57460041451	574600	4145110	0	0	0	0.0002904	0.0001383
57461041451	574610	4145110	0	0	0	0.0003226	0.0001536
57462041451	574620	4145110	0	0	0	0.0003617	0.0001722

Garvey Reservoir Rehab - Unmitigated Proposed Pump Station

Cancer Risk Summary & Maximum Annual GLC for Chronic Calculations

Cancer Risk Summary

323

Max Risk: 1.12234

XY	X	Y	Offroad Risk	Haul Risk	Total Risk
7463041451	574630	4145110	0.00616861	0	0.006169
7464041451	574640	4145110	0.006917745	0	0.006918
7465041451	574650	4145110	0.007728738	0	0.007729
7466041451	574660	4145110	0.00891932	0	0.008919
7460041451	574600	4145120	0.010148463	0	0.010148
7461041451	574610	4145120	0.011534261	0	0.011534
7462041451	574620	4145120	0.013030522	0	0.013031
7463041451	574630	4145120	0.014363298	0	0.014363
7464041451	574640	4145120	0.015548658	0	0.015549
7465041451	574650	4145120	0.016316672	0	0.016317
7466041451	574660	4145120	0.016687825	0	0.016688
7460041451	574600	4145130	0.001968637	0	0.001969
7462041451	574620	4145130	0.002109627	0	0.00211
7463041451	574630	4145130	0.002263872	0	0.002264
7464041451	574640	4145130	0.002442219	0	0.002442
7465041451	574650	4145130	0.002635025	0	0.002635
7463041451	574630	4145140	0.002857155	0	0.002857
7464041451	574640	4145140	0.003101778	0	0.003102
7459041451	574590	4145150	0.003383758	0	0.003384
7460041451	574600	4145150	0.003707513	0	0.003708
7460041451	574600	4145160	0.004087101	0	0.004087
7461041451	574610	4145160	0.004514891	0	0.004515
7461041451	574610	4145170	0.005010967	0	0.005011
7457041450	574570	4145030	0.00558778	0	0.005588
7463041450	574630	4145080	0.006260595	0	0.006261
7461041450	574610	4145090	0.006897661	0	0.006898
7462041450	574620	4145090	0.007832774	0	0.007833
7463041450	574630	4145090	0.008851436	0	0.008851
7464041450	574640	4145090	0.009909061	0	0.009909
7460041451	574600	4145100	0.011030554	0	0.011031
7461041451	574610	4145100	0.012105451	0	0.012105
7462041451	574620	4145100	0.013013651	0	0.013014
7463041451	574630	4145100	0.013687671	0	0.013688
7464041451	574640	4145100	0.014042757	0	0.014043
7465041451	574650	4145100	0	0	0
7459041451	574590	4145110	0	0	0
7460041451	574600	4145110	0	0	0
7461041451	574610	4145110	0	0	0
7462041451	574620	4145110	0	0	0
7463041451	574630	4145110	0	0	0
7464041451	574640	4145110	0	0	0
7465041451	574650	4145110	0	0	0
7466041451	574660	4145110	0	0	0
7460041451	574600	4145120	0	0	0
7461041451	574610	4145120	0	0	0
7462041451	574620	4145120	0	0	0
7463041451	574630	4145120	0	0	0
7464041451	574640	4145120	0	0	0
7465041451	574650	4145120	0	0	0
7466041451	574660	4145120	0	0	0
7460041451	574600	4145130	0	0	0
7462041451	574620	4145130	0	0	0
7463041451	574630	4145130	0	0	0
7464041451	574640	4145130	0	0	0
7465041451	574650	4145130	0	0	0
7463041451	574630	4145140	0	0	0
7464041451	574640	4145140	0	0	0
7459041451	574590	4145150	0	0	0
7460041451	574600	4145150	0	0	0
7460041451	574600	4145160	0	0	0
7461041451	574610	4145160	0	0	0
7461041451	574610	4145170	0	0	0

Max GLC for Chronic Calcs

Max GLC: 0.073931

XY	X	Y	2025	2026	2027	2034	2035
57463041451	574630	4145110	0	0	0	0.0004063	0.0001935
57464041451	574640	4145110	0	0	0	0.0004557	0.000217
57465041451	574650	4145110	0	0	0	0.0005091	0.0002424
57466041451	574660	4145110	0	0	0	0.0005875	0.0002798
57460041451	574600	4145120	0	0	0	0.0006685	0.0003183
57461041451	574610	4145120	0	0	0	0.0007598	0.0003618
57462041451	574620	4145120	0	0	0	0.0008583	0.0004087
57463041451	574630	4145120	0	0	0	0.0009461	0.0004505
57464041451	574640	4145120	0	0	0	0.0010242	0.0004877
57465041451	574650	4145120	0	0	0	0.0010748	0.0005118
57466041451	574660	4145120	0	0	0	0.0010993	0.0005235
57460041451	574600	4145130	0	0	0	0.0001297	6.175E-05
57462041451	574620	4145130	0	0	0	0.000139	6.617E-05
57463041451	574630	4145130	0	0	0	0.0001491	7.101E-05
57464041451	574640	4145130	0	0	0	0.0001609	7.661E-05
57465041451	574650	4145130	0	0	0	0.0001736	8.265E-05
57463041451	574630	4145140	0	0	0	0.0001882	8.962E-05
57464041451	574640	4145140	0	0	0	0.0002043	9.73E-05
57459041451	574590	4145150	0	0	0	0.0002229	0.0001061
57460041451	574600	4145150	0	0	0	0.0002442	0.0001163
57460041451	574600	4145160	0	0	0	0.0002692	0.0001282
57461041451	574610	4145160	0	0	0	0.0002974	0.0001416
57461041451	574610	4145170	0	0	0	0.0003301	0.0001572
57457041450	574570	4145030	0	0	0	0.0003681	0.0001753
57463041450	574630	4145080	0	0	0	0.0004124	0.0001964
57461041450	574610	4145090	0	0	0	0.0004544	0.0002164
57462041450	574620	4145090	0	0	0	0.000516	0.0002457
57463041450	574630	4145090	0	0	0	0.0005831	0.0002776
57464041450	574640	4145090	0	0	0	0.0006527	0.0003108
57460041451	574600	4145100	0	0	0	0.0007266	0.000346
57461041451	574610	4145100	0	0	0	0.0007974	0.0003797
57462041451	574620	4145100	0	0	0	0.0008572	0.0004082
57463041451	574630	4145100	0	0	0	0.0009016	0.0004293
57464041451	574640	4145100	0	0	0	0.000925	0.0004405
57465041451	574650	4145100	0	0	0	0	0
57459041451	574590	4145110	0	0	0	0	0
57460041451	574600	4145110	0	0	0	0	0
57461041451	574610	4145110	0	0	0	0	0
57462041451	574620	4145110	0	0	0	0	0
57463041451	574630	4145110	0	0	0	0	0
57464041451	574640	4145110	0	0	0	0	0
57465041451	574650	4145110	0	0	0	0	0
57466041451	574660	4145110	0	0	0	0	0
57460041451	574600	4145120	0	0	0	0	0
57461041451	574610	4145120	0	0	0	0	0
57462041451	574620	4145120	0	0	0	0	0
57463041451	574630	4145120	0	0	0	0	0
57464041451	574640	4145120	0	0	0	0	0
57465041451	574650	4145120	0	0	0	0	0
57466041451	574660	4145120	0	0	0	0	0
57460041451	574600	4145130	0	0	0	0	0
57462041451	574620	4145130	0	0	0	0	0
57463041451	574630	4145130	0	0	0	0	0
57464041451	574640	4145130	0	0	0	0	0
57465041451	574650	4145130	0	0	0	0	0
57463041451	574630	4145140	0	0	0	0	0
57464041451	574640	4145140	0	0	0	0	0
57459041451	574590	4145150	0	0	0	0	0
57460041451	574600	4145150	0	0	0	0	0
57460041451	574600	4145160	0	0	0	0	0
57461041451	574610	4145160	0	0	0	0	0
57461041451	574610	4145170	0	0	0	0	0

Garvey Reservoir Rehab - Unmitigated Proposed Pump Station

Construction Modeling Assumptions

AERMOD Sources

Volume Sources		
Offroad Construction Exhaust		
Release Height	3.66	m
Emissions rate	1	g/s
Init Vert Dimension	3.4	m
Line Volume		
Onroad Hauling Exhaust		
Plume Height	7.315	m
Plume Width	20	m
Release Height	3.66	m
Emissions rate	1	g/s

Meteorology:

SCAQMD	Pico	Rivera	2010 - 2012, 2015 - 2016

SCAQMD Met Data

https://www.aqmd.gov/home/air-quality/meteorological-data/data-for-aermod

AERMOD Sources

Garvey Reservoir Rehab - Unmitigated Proposed Pump Station

Health Risk Assessment Risk Factors

Residential Risk	Abbreviation	UOM	3rd Trimester	0<2	2<16	16<30
Daily Breathing Rate (95th %'ile)	DBR	L/kg-day	361	1090	572	261
Fraction Of Time At Home [a]	FAH	unitless	1	1	1	0.73
Exposure Frequency	EF	days/year	0.96	0.96	0.96	0.96
Age Sensitivity Factor	ASF	unitless	10	10	3	1
Inhalation Absorption Factor	A	unitless	1	1	1	1
Conversion Factor	CF_1	m^3/L	0.001	0.001	0.001	0.001
Conversion Factor	CF_2	$\mu g/m^3$	0.001	0.001	0.001	0.001
Cancer Potency Factor (diesel exhaust)	CPF	$mg/kg\text{-}day^{-1}$	1.1	1.1	1.1	1.1
Averaging Time (for residential exposure)	AT	years	70.00	70.00	70.00	70.00

[a] assume school or daycare will have cancer risk of >1 per million

Garvey Reservoir Rehab - Unmitigated Proposed Pump Station

Health Risk Assessment Exposure Duration Assumptions for Offroad Equipment

Residential Receptors

			Start Date	*9/1/2025*	*12/1/2025*	*12/2/2027*
			End Date	*11/30/2025*	*12/1/2027*	*11/28/2041*
	9/1/2025	*5/31/2035*	*Days*	*90*	*730*	*5110*
Phase	Start Date	End Date	Duration (days)	3rd Tri	0<2	02<16
Demolition - 2025	9/1/2025	12/31/2027	852	0	0	0
Demolition - 2026			1	0	0	0
Site Preparation - 2034	1/1/2034	3/31/2034	90	0	0	90
Site Preparation - 2026			1	0	0	0
Grading - 2034	4/1/2034	5/31/2034	61	0	0	61
Grading - 2026			1	0	0	0
Infrastructure - 2034	6/1/2034	12/31/2034	214	0	0	214
Infrastructure - 2035	1/1/2035	5/31/2035	151	0	0	151
Paving - 2025			1	0	0	0
Architectural Coating - 2026			1	0	0	0

is the start/end dates for Phase 1 and 2

Intake Factor for Inhalation, IF (m^3/kg-day)

Phase	Year	Year	Equation	3rd Trimester	0<2	2<16
Demolition - 2025		2025		0	0	0
Demolition - 2026		1900	$\frac{DBR \cdot FAH \cdot EF \cdot ED \cdot ASF \cdot A \cdot CF_1}{AT}$	0	0	0
Site Preparation - 2034		2034		0	0	0.005802834
Site Preparation - 2026		1900		0	0	0
Grading - 2034		2034		0	0	0.003933032
Grading - 2026		1900		0	0	0
Infrastructure - 2034		2034		0	0	0.013797849
Infrastructure - 2035		2035		0	0	0.009735865
Paving - 2025		1900		0	0	0
Architectural Coating - 2026		1900		0	0	0

Risk Calculation Part 1, R1

Equation	3rd Trimester	0<2	2<16
	0	0	0
	0	0	0
	0	0	6.383E-06
	0	0	0
$IF \cdot CPF \cdot CF_2$	0	0	4.326E-06
	0	0	0
	0	0	1.518E-05
	0	0	1.071E-05
	0	0	0
	0	0	0

Garvey Reservoir Rehab - Unmitigated Proposed Pump Station

Offroad DPM Emissions, Ground Level Concentrations and Health Risk Calculations

Residential Receptors

Phase	Year	Emissions (lbs/day)	Work Hours Per Day	Emissions (g/s)
Demolition - 2025	2025		10	0
Demolition - 2026	1900		10	0
Site Preparation - 2034	2034	0.060	10	0.000755983
Site Preparation - 2026	1900		10	0
Grading - 2034	2034	0.050	10	0.000629986
Grading - 2026	1900		10	0
Infrastructure - 2034	2034	0.100	10	0.001259972
Infrastructure - 2035	2035	0.100	10	0.001259972
Paving - 2025	1900		10	0
Architectural Coating - 2026	1900		10	0

MMULT($D30:$M30, 'Exposure Durations'!M$30:M$39)

Garvey Reservoir Rehab - Unmitigated Proposed Pump Station			Demolition - 2025	Demolition - 2026	Site Preparation - 2034	Site Preparation - 202	Grading - 2034	Grading - 2026	Infrastructure - 2034	Infrastructure - 2035	Paving - 2025	Architectural Coating - 2	Child Risk				
Unique Identifier	X (UTM)	Y (UTM)	2025	1900	2034	1900	2034	1900	2034	2035	1900	1900	3rd Trimester	0<2	2<16	Total	per million
396166.283767377.28	396166.28	3767377	0	0	2.82813E-05	0	2.35678E-05	0	4.71356E-05	4.71356E-05	0	0	0	0	1.50269E-09	1.50269E-09	0.0015027
396266.283767377.28	396266.28	3767377	0	0	3.12675E-05	0	2.60562E-05	0	5.21125E-05	5.21125E-05	0	0	0	0	1.66135E-09	1.66135E-09	0.0016614
396366.283767377.28	396366.28	3767377	0	0	3.58563E-05	0	2.98802E-05	0	5.97605E-05	5.97605E-05	0	0	0	0	1.90517E-09	1.90517E-09	0.0019052
396466.283767377.28	396466.28	3767377	0	0	4.07324E-05	0	3.39437E-05	0	6.78873E-05	6.78873E-05	0	0	0	0	2.16426E-09	2.16426E-09	0.0021643
396566.283767377.28	396566.28	3767377	0	0	4.70146E-05	0	3.91788E-05	0	7.83577E-05	7.83577E-05	0	0	0	0	2.49805E-09	2.49805E-09	0.0024981
396666.283767377.28	396666.28	3767377	0	0	5.27374E-05	0	4.39478E-05	0	8.78957E-05	8.78957E-05	0	0	0	0	2.80212E-09	2.80212E-09	0.0028021
396766.283767377.28	396766.28	3767377	0	0	5.82334E-05	0	4.85278E-05	0	9.70557E-05	9.70557E-05	0	0	0	0	3.09415E-09	3.09415E-09	0.0030941
396866.283767377.28	396866.28	3767377	0	0	6.46441E-05	0	5.38701E-05	0	0.00010774	0.00010774	0	0	0	0	3.43477E-09	3.43477E-09	0.0034348
396966.283767377.28	396966.28	3767377	0	0	7.2771E-05	0	6.06425E-05	0	0.000121285	0.000121285	0	0	0	0	3.86658E-09	3.86658E-09	0.0038666
397066.283767377.28	397066.28	3767377	0	0	7.89549E-05	0	6.57957E-05	0	0.000131591	0.000131591	0	0	0	0	4.19515E-09	4.19515E-09	0.0041952
397166.283767377.28	397166.28	3767377	0	0	8.1495E-05	0	6.79125E-05	0	0.000135825	0.000135825	0	0	0	0	4.33012E-09	4.33012E-09	0.0043301
397266.283767377.28	397266.28	3767377	0	0	8.08449E-05	0	6.73707E-05	0	0.000134741	0.000134741	0	0	0	0	4.29557E-09	4.29557E-09	0.0042956
397366.283767377.28	397366.28	3767377	0	0	8.16991E-05	0	6.80826E-05	0	0.000136165	0.000136165	0	0	0	0	4.34096E-09	4.34096E-09	0.004341
397466.283767377.28	397466.28	3767377	0	0	8.10414E-05	0	6.75345E-05	0	0.000135069	0.000135069	0	0	0	0	4.30602E-09	4.30602E-09	0.004306
397566.283767377.28	397566.28	3767377	0	0	7.7133E-05	0	6.42775E-05	0	0.000128555	0.000128555	0	0	0	0	4.09835E-09	4.09835E-09	0.0040983
397666.283767377.28	397666.28	3767377	0	0	7.18562E-05	0	5.98802E-05	0	0.00011976	0.00011976	0	0	0	0	3.81798E-09	3.81798E-09	0.003818
397766.283767377.28	397766.28	3767377	0	0	6.38352E-05	0	5.3196E-05	0	0.000106392	0.000106392	0	0	0	0	3.39179E-09	3.39179E-09	0.0033918
397866.283767377.28	397866.28	3767377	0	0	5.71297E-05	0	4.76081E-05	0	9.52161E-05	9.52161E-05	0	0	0	0	3.0355E-09	3.0355E-09	0.0030355
396166.283767477.28	396166.28	3767477	0	0	2.97328E-05	0	2.47774E-05	0	4.95547E-05	4.95547E-05	0	0	0	0	1.57981E-09	1.57981E-09	0.0015798
396266.283767477.28	396266.28	3767477	0	0	3.26736E-05	0	2.7228E-05	0	5.4456E-05	5.4456E-05	0	0	0	0	1.73606E-09	1.73606E-09	0.0017361
396366.283767477.28	396366.28	3767477	0	0	3.80411E-05	0	3.17009E-05	0	6.34018E-05	6.34018E-05	0	0	0	0	2.02126E-09	2.02126E-09	0.0020213
396466.283767477.28	396466.28	3767477	0	0	4.4036E-05	0	3.66967E-05	0	7.33934E-05	7.33934E-05	0	0	0	0	2.33979E-09	2.33979E-09	0.0023398
396566.283767477.28	396566.28	3767477	0	0	5.10062E-05	0	4.25052E-05	0	8.50103E-05	8.50103E-05	0	0	0	0	2.71014E-09	2.71014E-09	0.0027101
396666.283767477.28	396666.28	3767477	0	0	5.85963E-05	0	4.88302E-05	0	9.76604E-05	9.76604E-05	0	0	0	0	3.11343E-09	3.11343E-09	0.0031134
396766.283767477.28	396766.28	3767477	0	0	6.72523E-05	0	5.60436E-05	0	0.000112087	0.000112087	0	0	0	0	3.57335E-09	3.57335E-09	0.0035734
396866.283767477.28	396866.28	3767477	0	0	7.73295E-05	0	6.44413E-05	0	0.000128883	0.000128883	0	0	0	0	4.10879E-09	4.10879E-09	0.0041088
396966.283767477.28	396966.28	3767477	0	0	9.02191E-05	0	7.51825E-05	0	0.000150365	0.000150365	0	0	0	0	4.79366E-09	4.79366E-09	0.0047937
397066.283767477.28	397066.28	3767477	0	0	0.000101778	0	8.4815E-05	0	0.00016963	0.00016963	0	0	0	0	5.40783E-09	5.40783E-09	0.0054078
397166.283767477.28	397166.28	3767477	0	0	0.000108612	0	9.05101E-05	0	0.00018102	0.00018102	0	0	0	0	5.77095E-09	5.77095E-09	0.0057709
397266.283767477.28	397266.28	3767477	0	0	0.000109859	0	9.15496E-05	0	0.000183099	0.000183099	0	0	0	0	5.83722E-09	5.83722E-09	0.0058372
397366.283767477.28	397366.28	3767477	0	0	0.000109602	0	9.13354E-05	0	0.000182671	0.000182671	0	0	0	0	5.82357E-09	5.82357E-09	0.0058236
397466.283767477.28	397466.28	3767477	0	0	0.00010865	0	9.05416E-05	0	0.000181083	0.000181083	0	0	0	0	5.77296E-09	5.77296E-09	0.005773
397566.283767477.28	397566.28	3767477	0	0	0.000102375	0	8.53127E-05	0	0.000170625	0.000170625	0	0	0	0	5.43956E-09	5.43956E-09	0.0054396
397666.283767477.28	397666.28	3767477	0	0	9.28348E-05	0	7.73623E-05	0	0.000154725	0.000154725	0	0	0	0	4.93264E-09	4.93264E-09	0.0049326
397766.283767477.28	397766.28	3767477	0	0	8.19486E-05	0	6.82905E-05	0	0.000136581	0.000136581	0	0	0	0	4.35422E-09	4.35422E-09	0.0043542
397866.283767477.28	397866.28	3767477	0	0	7.12212E-05	0	5.9351E-05	0	0.000118702	0.000118702	0	0	0	0	3.78423E-09	3.78423E-09	0.0037842
396166.283767577.28	396166.28	3767577	0	0	3.05266E-05	0	2.54388E-05	0	5.08777E-05	5.08777E-05	0	0	0	0	1.62199E-09	1.62199E-09	0.001622
396266.283767577.28	396266.28	3767577	0	0	3.41704E-05	0	2.84754E-05	0	5.69507E-05	5.69507E-05	0	0	0	0	1.8156E-09	1.8156E-09	0.0018156
396366.283767577.28	396366.28	3767577	0	0	3.94926E-05	0	3.29105E-05	0	6.58209E-05	6.58209E-05	0	0	0	0	2.09838E-09	2.09838E-09	0.0020984
396466.283767577.28	396466.28	3767577	0	0	4.64476E-05	0	3.87063E-05	0	7.74127E-05	7.74127E-05	0	0	0	0	2.46793E-09	2.46793E-09	0.0024679
396566.283767577.28	396566.28	3767577	0	0	5.52321E-05	0	4.60268E-05	0	9.20536E-05	9.20536E-05	0	0	0	0	2.93468E-09	2.93468E-09	0.0029347
396666.283767577.28	396666.28	3767577	0	0	6.59595E-05	0	5.49663E-05	0	0.000109933	0.000109933	0	0	0	0	3.50466E-09	3.50466E-09	0.0035047
396766.283767577.28	396766.28	3767577	0	0	7.60292E-05	0	6.33577E-05	0	0.000126715	0.000126715	0	0	0	0	4.0397E-09	4.0397E-09	0.0040397
396866.283767577.28	396866.28	3767577	0	0	9.28121E-05	0	7.73434E-05	0	0.000154687	0.000154687	0	0	0	0	4.93143E-09	4.93143E-09	0.0049314
396966.283767577.28	396966.28	3767577	0	0	0.000112059	0	9.33828E-05	0	0.000186766	0.000186766	0	0	0	0	5.95411E-09	5.95411E-09	0.0059541
397066.283767577.28	397066.28	3767577	0	0	0.000132554	0	0.000110462	0	0.000220924	0.000220924	0	0	0	0	7.04307E-09	7.04307E-09	0.0070431
397166.283767577.28	397166.28	3767577	0	0	0.000150169	0	0.00012514	0	0.000250281	0.000250281	0	0	0	0	7.97899E-09	7.97899E-09	0.007979
397266.283767577.28	397266.28	3767577	0	0	0.000157713	0	0.000131428	0	0.000262855	0.000262855	0	0	0	0	8.37986E-09	8.37986E-09	0.0083799
397366.283767577.28	397366.28	3767577	0	0	0.000157517	0	0.000131264	0	0.000262528	0.000262528	0	0	0	0	8.36942E-09	8.36942E-09	0.0083694

Garvey Reservoir Rehab - Unmitigated Proposed Pump Station			Demolition - 2025	Demolition - 2026	Site Preparation - 203	Site Preparation - 202	Grading - 2034	Grading - 2026	Infrastructure - 203	Infrastructure - 203	Paving - 2025	Architectural Coating - 2	Child Risk					
Unique Identifier	X (UTM)	Y (UTM)	2025	1900	2034	1900	2034	1900	2034	2035	1900	1900	3rd Trimester	0<2	2<16	Total	per million	
397466.283767577.28	397466.28	3767577	0	0	0.000155672	0	0.000129727	0	0.000259453	0.000259453	0	0	0	0	8.27141E-09	8.27141E-09	0.0082714	
397566.283767577.28	397566.28	3767577	0	0	0.000142956	0	0.00011913	0	0.000238261	0.000238261	0	0	0	0	7.59578E-09	7.59578E-09	0.0075958	
397666.283767577.28	397666.28	3767577	0	0	0.00012544	0	0.000104534	0	0.000209067	0.000209067	0	0	0	0	6.66509E-09	6.66509E-09	0.0066651	
397766.283767577.28	397766.28	3767577	0	0	0.000106238	0	8.85319E-05	0	0.000177064	0.000177064	0	0	0	0	5.64482E-09	5.64482E-09	0.0056448	
397866.283767577.28	397866.28	3767577	0	0	8.86617E-05	0	7.38848E-05	0	0.00014777	0.00014777	0	0	0	0	4.71091E-09	4.71091E-09	0.0047109	
396166.283767677.28	396166.28	3767677	0	0	3.15472E-05	0	2.62893E-05	0	5.25786E-05	5.25786E-05	0	0	0	0	1.67621E-09	1.67621E-09	0.0016762	
396266.283767677.28	396266.28	3767677	0	0	3.55615E-05	0	2.96345E-05	0	5.92691E-05	5.92691E-05	0	0	0	0	1.88951E-09	1.88951E-09	0.0018895	
396366.283767677.28	396366.28	3767677	0	0	4.14657E-05	0	3.45547E-05	0	6.91095E-05	6.91095E-05	0	0	0	0	2.20322E-09	2.20322E-09	0.0022032	
396466.283767677.28	396466.28	3767677	0	0	4.9343E-05	0	4.11192E-05	0	8.22384E-05	8.22384E-05	0	0	0	0	2.62177E-09	2.62177E-09	0.0026218	
396566.283767677.28	396566.28	3767677	0	0	5.89213E-05	0	4.91011E-05	0	9.82022E-05	9.82022E-05	0	0	0	0	3.1307E-09	3.1307E-09	0.0031307	
396666.283767677.28	396666.28	3767677	0	0	6.94824E-05	0	5.7902E-05	0	0.000115804	0.000115804	0	0	0	0	3.69185E-09	3.69185E-09	0.0036918	
396766.283767677.28	396766.28	3767677	0	0	8.65525E-05	0	7.21271E-05	0	0.000144254	0.000144254	0	0	0	0	4.59884E-09	4.59884E-09	0.0045988	
396866.283767677.28	396866.28	3767677	0	0	0.000111697	0	9.30804E-05	0	0.000186161	0.000186161	0	0	0	0	5.93483E-09	5.93483E-09	0.0059348	
396966.283767677.28	396966.28	3767677	0	0	0.00014434	0	0.000120283	0	0.000240566	0.000240566	0	0	0	0	7.66929E-09	7.66929E-09	0.0076693	
397066.283767677.28	397066.28	3767677	0	0	0.000179796	0	0.00014983	0	0.000299659	0.000299659	0	0	0	0	9.55317E-09	9.55317E-09	0.0095532	
397166.283767677.28	397166.28	3767677	0	0	0.000217247	0	0.000181039	0	0.000362078	0.000362078	0	0	0	0	1.15431E-08	1.15431E-08	0.0115431	
397266.283767677.28	397266.28	3767677	0	0	0.000249233	0	0.000207694	0	0.000415388	0.000415388	0	0	0	0	1.32426E-08	1.32426E-08	0.0132426	
397366.283767677.28	397366.28	3767677	0	0	0.000250813	0	0.00020901	0	0.000418021	0.000418021	0	0	0	0	1.33266E-08	1.33266E-08	0.0133266	
397466.283767677.28	397466.28	3767677	0	0	0.00024546	0	0.00020455	0	0.0004091	0.0004091	0	0	0	0	1.30422E-08	1.30422E-08	0.0130422	
397566.283767677.28	397566.28	3767677	0	0	0.000214798	0	0.000178998	0	0.000357996	0.000357996	0	0	0	0	1.1413E-08	1.1413E-08	0.011413	
397666.283767677.28	397666.28	3767677	0	0	0.000176734	0	0.000147278	0	0.000294556	0.000294556	0	0	0	0	9.39049E-09	9.39049E-09	0.0093905	
397766.283767677.28	397766.28	3767677	0	0	0.000140658	0	0.000117215	0	0.00023443	0.00023443	0	0	0	0	7.47367E-09	7.47367E-09	0.0074737	
397866.283767677.28	397866.28	3767677	0	0	0.00011057	0	9.21418E-05	0	0.000184284	0.000184284	0	0	0	0	5.87498E-09	5.87498E-09	0.005875	
396166.283767777.28	396166.28	3767777	0	0	3.21595E-05	0	2.67996E-05	0	5.35992E-05	5.35992E-05	0	0	0	0	1.70875E-09	1.70875E-09	0.0017087	
396266.283767777.28	396266.28	3767777	0	0	3.71037E-05	0	3.09197E-05	0	6.18394E-05	6.18394E-05	0	0	0	0	1.97145E-09	1.97145E-09	0.0019714	
396366.283767777.28	396366.28	3767777	0	0	4.30457E-05	0	3.58714E-05	0	7.17428E-05	7.17428E-05	0	0	0	0	2.28717E-09	2.28717E-09	0.0022872	
396466.283767777.28	396466.28	3767777	0	0	5.10969E-05	0	4.25808E-05	0	8.51615E-05	8.51615E-05	0	0	0	0	2.71496E-09	2.71496E-09	0.002715	
396566.283767777.28	396566.28	3767777	0	0	6.07811E-05	0	5.06509E-05	0	0.000101302	0.000101302	0	0	0	0	3.22951E-09	3.22951E-09	0.0032295	
396666.283767777.28	396666.28	3767777	0	0	7.47516E-05	0	6.2293E-05	0	0.000124586	0.000124586	0	0	0	0	3.97182E-09	3.97182E-09	0.0039718	
396766.283767777.28	396766.28	3767777	0	0	9.72799E-05	0	8.10666E-05	0	0.000162133	0.000162133	0	0	0	0	5.16883E-09	5.16883E-09	0.0051688	
396866.283767777.28	396866.28	3767777	0	0	0.000130551	0	0.000108792	0	0.000217585	0.000217585	0	0	0	0	6.93662E-09	6.93662E-09	0.0069366	
396966.283767777.28	396966.28	3767777	0	0	0.000178843	0	0.000149036	0	0.000298072	0.000298072	0	0	0	0	9.50256E-09	9.50256E-09	0.0095026	
397066.283767777.28	397066.28	3767777	0	0	0.000246057	0	0.000205048	0	0.000410096	0.000410096	0	0	0	0	1.30739E-08	1.30739E-08	0.0130739	
397166.283767777.28	397166.28	3767777	0	0	0.000331695	0	0.000276413	0	0.000552825	0.000552825	0	0	0	0	1.76241E-08	1.76241E-08	0.0176241	
397266.283767777.28	397266.28	3767777	0	0	0.000427622	0	0.000356352	0	0.000712703	0.000712703	0	0	0	0	2.27211E-08	2.27211E-08	0.0227211	
397366.283767777.28	397366.28	3767777	0	0	0.000464038	0	0.000386698	0	0.000773396	0.000773396	0	0	0	0	2.4656E-08	2.4656E-08	0.024656	
397466.283767777.28	397466.28	3767777	0	0	0.000441593	0	0.000367994	0	0.000735988	0.000735988	0	0	0	0	2.34634E-08	2.34634E-08	0.0234634	
397566.283767777.28	397566.28	3767777	0	0	0.000355078	0	0.000295898	0	0.000591796	0.000591796	0	0	0	0	1.88665E-08	1.88665E-08	0.0188665	
397666.283767777.28	397666.28	3767777	0	0	0.000260875	0	0.000217396	0	0.000434791	0.000434791	0	0	0	0	1.38612E-08	1.38612E-08	0.0138612	
397766.283767777.28	397766.28	3767777	0	0	0.000189351	0	0.000157793	0	0.000315585	0.000315585	0	0	0	0	1.00609E-08	1.00609E-08	0.0100609	
397866.283767777.28	397866.28	3767777	0	0	0.000139245	0	0.000116037	0	0.000232074	0.000232074	0	0	0	0	7.39856E-09	7.39856E-09	0.0073986	
396166.283767877.28	396166.28	3767877	0	0	3.24922E-05	0	2.70768E-05	0	5.41536E-05	5.41536E-05	0	0	0	0	1.72642E-09	1.72642E-09	0.0017264	
396266.283767877.28	396266.28	3767877	0	0	3.76329E-05	0	3.13607E-05	0	6.27214E-05	6.27214E-05	0	0	0	0	1.99957E-09	1.99957E-09	0.0019996	
396366.283767877.28	396366.28	3767877	0	0	4.40814E-05	0	3.67345E-05	0	7.3469E-05	7.3469E-05	0	0	0	0	2.3422E-09	2.3422E-09	0.0023422	
396466.283767877.28	396466.28	3767877	0	0	5.21326E-05	0	4.34438E-05	0	8.68877E-05	8.68877E-05	0	0	0	0	2.76999E-09	2.76999E-09	0.00277	
396566.283767877.28	396566.28	3767877	0	0	6.27693E-05	0	5.23077E-05	0	0.000104615	0.000104615	0	0	0	0	3.33515E-09	3.33515E-09	0.0033352	
397466.283767877.28	397466.28	3767877	0	0	0.000975717	0	0.000813098	0	0.001626196	0.001626196	0	0	0	0	5.18433E-08	5.18433E-08	0.0518433	
397566.283767877.28	397566.28	3767877	0	0	0.000658348	0	0.000548623	0	0.001097247	0.001097247	0	0	0	0	3.49804E-08	3.49804E-08	0.0349804	
397666.283767877.28	397666.28	3767877	0	0	0.000398222	0	0.000331851	0	0.000663703	0.000663703	0	0	0	0	2.11589E-08	2.11589E-08	0.0211589	
397766.283767877.28	397766.28	3767877	0	0	0.000253043	0	0.000210869	0	0.000421738	0.000421738	0	0	0	0	1.34451E-08	1.34451E-08	0.0134451	
397866.283767877.28	397866.28	3767877	0	0	0.000170497	0	0.000142081	0	0.000284162	0.000284162	0	0	0	0	9.0591E-09	9.0591E-09	0.0090591	
396166.283767977.28	396166.28	3767977	0	0	3.23636E-05	0	2.69697E-05	0	5.39394E-05	5.39394E-05	0	0	0	0	1.7196E-09	1.7196E-09	0.0017196	
396266.283767977.28	396266.28	3767977	0	0	3.76555E-05	0	3.13796E-05	0	6.27592E-05	6.27592E-05	0	0	0	0	2.00077E-09	2.00077E-09	0.0020008	
396366.283767977.28	396366.28	3767977	0	0	4.42099E-05	0	3.68416E-05	0	7.36832E-05	7.36832E-05	0	0	0	0	2.34903E-09	2.34903E-09	0.002349	
396466.283767977.28	396466.28	3767977	0	0	5.22838E-05	0	4.35698E-05	0	8.71397E-05	8.71397E-05	0	0	0	0	2.77802E-09	2.77802E-09	0.002778	
397466.283767977.28	397466.28	3767977	0	0	0.003493989	0	0.002911657	0	0.005823314	0.005823314	0	0	0	0	1.85648E-07	1.85648E-07	0.185648	
397566.283767977.28	397566.28	3767977	0	0	0.001239382	0	0.001032818	0	0.002065636	0.002065636	0	0	0	0	6.58527E-08	6.58527E-08	0.0658527	
397666.283767977.28	397666.28	3767977	0	0	0.000562951	0	0.000469125	0	0.000938251	0.000938251	0	0	0	0	2.99116E-08	2.99116E-08	0.0299116	
397766.283767977.28	397766.28	3767977	0	0	0.000322404	0	0.00026867	0	0.00053734	0.00053734	0	0	0	0	1.71305E-08	1.71305E-08	0.0171305	
397866.283767977.28	397866.28	3767977	0	0	0.000196752	0	0.00016396	0	0.00032792	0.00032792	0	0	0	0	1.04541E-08	1.04541E-08	0.0104541	
396166.283768077.28	396166.28	3768077	0	0	3.26282E-05	0	2.71902E-05	0	5.43804E-05	5.43804E-05	0	0	0	0	1.73365E-09	1.73365E-09	0.0017337	
396266.283768077.28	396266.28	3768077	0	0	3.73607E-05	0	3.11339E-05	0	6.22678E-05	6.22678E-05	0	0	0	0	1.98511E-09	1.98511E-09	0.0019851	
396366.283768077.28	396366.28	3768077	0	0	4.38395E-05	0	3.65329E-05	0	7.30658E-05	7.30658E-05	0	0	0	0	2.32935E-09	2.32935E-09	0.0023293	
396466.283768077.28	396466.28	3768077	0	0	5.24879E-05	0	4.37399E-05	0	8.74799E-05	8.74799E-05	0	0	0	0	2.78887E-09	2.78887E-09	0.0027889	
397466.283768077.28	397466.28	3768077	0	0	0.018197691	0	0.015164742	0	0.030329484	0.030329484	0	0	0	0	9.66908E-07	9.66908E-07	0.9669077	
397566.283768077.28	397566.28	3768077	0	0	0.00225689	0	0.001880742	0	0.003761483	0.003761483	0	0	0	0	1.19917E-07	1.19917E-07	0.1199166	
397666.283768077.28	397666.28	3768077	0	0	0.000800745	0	0.000667288	0	0.001334575	0.001334575	0	0	0	0	4.25464E-08	4.25464E-08	0.0425464	
397766.283768077.28	397766.28	3768077	0	0	0.000400807	0	0.000334006	0	0.000668012	0.000668012	0	0	0	0	2.12963E-08	2.12963E-08	0.0212963	
397866.283768077.28	397866.28	3768077	0	0	0.000233039	0	0.0001942	0	0.000388399	0.000388399	0	0	0	0	1.23822E-08	1.23822E-08	0.0123822	
396166.283768177.28	396166.28	3768177	0	0	3.2341E-05	0	2.69508E-05	0	5.39016E-05	5.39016E-05	0	0	0	0	1.71839E-09	1.71839E-09	0.0017184	
396266.283768177.28	396266.28	3768177	0	0	3.71566E-05	0	3.09638E-05	0	6.19276E-05	6.19276E-05	0	0	0	0	1.97426E-09	1.97426E-09	0.0019743	
396366.283768177.28	396366.28	3768177	0	0	4.35295E-05	0	3.62746E-05	0	7.25492E-05	7.25492E-05	0	0	0	0	2.31288E-09	2.31288E-09	0.0023129	
396466.283768177.28	396466.28	3768177	0	0	5.16563E-05	0	4.3047E-05	0	8.60939E-05	8.60939E-05	0	0	0	0	2.74468E-09	2.74468E-09	0.0027447	
397466.283768177.28	397466.28	3768177	0	0	0.006930092	0	0.005775076	0	0.011550153	0.011550153	0	0	0	0	3.6822E-07	3.6822E-07	0.3682203	
397566.283768177.28	397566.28	3768177	0	0	0.002290441	0	0.0019087	0	0.003817401	0.003817401	0	0	0	0	1.21699E-07	1.21699E-07	0.1216992	
397666.283768177.28	397666.28	3768177	0	0	0.000903627	0	0.000753022	0	0.001506045	0.001506045	0	0	0	0	4.80129E-08	4.80129E-08	0.0480129	
397766.283768177.28	397766.28	3768177	0	0	0.000467954	0	0.000389961	0	0.000779923	0.000779923	0	0	0	0	2.4864E-08	2.4864E-08	0.024864	

Garvey Reservoir Rehab - Unmitigated Proposed Pump Station			Demolition - 2025	Demolition - 2026	Site Preparation - 203	Site Preparation - 202	Grading - 2034	Grading - 2026	Infrastructure - 203	Infrastructure - 203	Paving - 2025	Architectural Coating - 2	Child Risk					
Unique Identifier	X (UTM)	Y (UTM)	2025	1900	2034	1900	2034	1900	2034	2035	1900	1900	3rd Trimester	0<2	2<16	Total	per million
397866.283768177.28	397866.28	3768177	0	0	0.000262666	0	0.000218889	0	0.000437777	0.000437777	0	0	0	0	1.39564E-08	1.39564E-08	0.0139564
396166.283768277.28	396166.28	3768277	0	0	3.17664E-05	0	2.6472E-05	0	5.2944E-05	5.2944E-05	0	0	0	0	1.68786E-09	1.68786E-09	0.0016879
396266.283768277.28	396266.28	3768277	0	0	3.62192E-05	0	3.01826E-05	0	6.03653E-05	6.03653E-05	0	0	0	0	1.92445E-09	1.92445E-09	0.0019245
396366.283768277.28	396366.28	3768277	0	0	4.23048E-05	0	3.5254E-05	0	7.0508E-05	7.0508E-05	0	0	0	0	2.24781E-09	2.24781E-09	0.0022478
396466.283768277.28	396466.28	3768277	0	0	5.00915E-05	0	4.17429E-05	0	8.34858E-05	8.34858E-05	0	0	0	0	2.66154E-09	2.66154E-09	0.0026615
397366.283768277.28	397366.28	3768277	0	0	0.001949432	0	0.001624526	0	0.003249053	0.003249053	0	0	0	0	1.0358E-07	1.0358E-07	0.1035802
397466.283768277.28	397466.28	3768277	0	0	0.002288936	0	0.001907447	0	0.003814893	0.003814893	0	0	0	0	1.21619E-07	1.21619E-07	0.1216193
397566.283768277.28	397566.28	3768277	0	0	0.001552858	0	0.001294048	0	0.002588096	0.002588096	0	0	0	0	8.25088E-08	8.25088E-08	0.0825088
397666.283768277.28	397666.28	3768277	0	0	0.000815547	0	0.000679623	0	0.001359245	0.001359245	0	0	0	0	4.33329E-08	4.33329E-08	0.0433329
397766.283768277.28	397766.28	3768277	0	0	0.000459713	0	0.000383095	0	0.000766189	0.000766189	0	0	0	0	2.44262E-08	2.44262E-08	0.0244262
397866.283768277.28	397866.28	3768277	0	0	0.000290676	0	0.00024223	0	0.000484459	0.000484459	0	0	0	0	1.54446E-08	1.54446E-08	0.0154446
396166.283768377.28	396166.28	3768377	0	0	3.06854E-05	0	2.55711E-05	0	5.11423E-05	5.11423E-05	0	0	0	0	1.63042E-09	1.63042E-09	0.0016304
396266.283768377.28	396266.28	3768377	0	0	3.51683E-05	0	2.9307E-05	0	5.86139E-05	5.86139E-05	0	0	0	0	1.86862E-09	1.86862E-09	0.0018686
396366.283768377.28	396366.28	3768377	0	0	4.07777E-05	0	3.39815E-05	0	6.79629E-05	6.79629E-05	0	0	0	0	2.16667E-09	2.16667E-09	0.0021667
396466.283768377.28	396466.28	3768377	0	0	4.80201E-05	0	4.00167E-05	0	8.00334E-05	8.00334E-05	0	0	0	0	2.55148E-09	2.55148E-09	0.0025515
397266.283768377.28	397266.28	3768377	0	0	0.000589569	0	0.000491307	0	0.000982615	0.000982615	0	0	0	0	3.13259E-08	3.13259E-08	0.0313259
397366.283768377.28	397366.28	3768377	0	0	0.000911338	0	0.000759448	0	0.001518897	0.001518897	0	0	0	0	4.84226E-08	4.84226E-08	0.0484226
397466.283768377.28	397466.28	3768377	0	0	0.001099608	0	0.00091634	0	0.00183268	0.00183268	0	0	0	0	5.84261E-08	5.84261E-08	0.0584261
397566.283768377.28	397566.28	3768377	0	0	0.000960431	0	0.00080036	0	0.001600719	0.001600719	0	0	0	0	5.10311E-08	5.10311E-08	0.0510311
397666.283768377.28	397666.28	3768377	0	0	0.000668917	0	0.000557431	0	0.001114861	0.001114861	0	0	0	0	3.55419E-08	3.55419E-08	0.0355419
397766.283768377.28	397766.28	3768377	0	0	0.000433413	0	0.000361177	0	0.000722355	0.000722355	0	0	0	0	2.30288E-08	2.30288E-08	0.0230288
397866.283768377.28	397866.28	3768377	0	0	0.000296943	0	0.000247452	0	0.000494904	0.000494904	0	0	0	0	1.57776E-08	1.57776E-08	0.0157776
396166.283768477.28	396166.28	3768477	0	0	2.95892E-05	0	2.46577E-05	0	4.93153E-05	4.93153E-05	0	0	0	0	1.57218E-09	1.57218E-09	0.0015722
396266.283768477.28	396266.28	3768477	0	0	3.3921E-05	0	2.82675E-05	0	5.6535E-05	5.6535E-05	0	0	0	0	1.80234E-09	1.80234E-09	0.0018023
396366.283768477.28	396366.28	3768477	0	0	3.90843E-05	0	3.25703E-05	0	6.51406E-05	6.51406E-05	0	0	0	0	2.07669E-09	2.07669E-09	0.0020767
396466.283768477.28	396466.28	3768477	0	0	4.54195E-05	0	3.78496E-05	0	7.56991E-05	7.56991E-05	0	0	0	0	2.4133E-09	2.4133E-09	0.0024133
397166.283768477.28	397166.28	3768477	0	0	0.000256392	0	0.00021366	0	0.00042732	0.00042732	0	0	0	0	1.3623E-08	1.3623E-08	0.013623
397266.283768477.28	397266.28	3768477	0	0	0.000380713	0	0.000317261	0	0.000634522	0.000634522	0	0	0	0	2.02286E-08	2.02286E-08	0.0202286
397366.283768477.28	397366.28	3768477	0	0	0.000524305	0	0.000436921	0	0.000873841	0.000873841	0	0	0	0	2.78582E-08	2.78582E-08	0.0278582
397466.283768477.28	397466.28	3768477	0	0	0.000619914	0	0.000516595	0	0.00103319	0.00103319	0	0	0	0	3.29382E-08	3.29382E-08	0.0329382
397566.283768477.28	397566.28	3768477	0	0	0.000588231	0	0.000490192	0	0.000980384	0.000980384	0	0	0	0	3.12548E-08	3.12548E-08	0.0312548
397666.283768477.28	397666.28	3768477	0	0	0.00047224	0	0.000393533	0	0.000787067	0.000787067	0	0	0	0	2.50918E-08	2.50918E-08	0.0250918
397766.283768477.28	397766.28	3768477	0	0	0.000363787	0	0.000303156	0	0.000606311	0.000606311	0	0	0	0	1.93293E-08	1.93293E-08	0.0193293
397866.283768477.28	397866.28	3768477	0	0	0.000262621	0	0.000218851	0	0.000437702	0.000437702	0	0	0	0	1.3954E-08	1.3954E-08	0.013954
396166.283768577.28	396166.28	3768577	0	0	2.84174E-05	0	2.36812E-05	0	4.73624E-05	4.73624E-05	0	0	0	0	1.50992E-09	1.50992E-09	0.0015099
396266.283768577.28	396266.28	3768577	0	0	3.11163E-05	0	2.59302E-05	0	5.18605E-05	5.18605E-05	0	0	0	0	1.65332E-09	1.65332E-09	0.0016533
396366.283768577.28	396366.28	3768577	0	0	3.65291E-05	0	3.04409E-05	0	6.08819E-05	6.08819E-05	0	0	0	0	1.94092E-09	1.94092E-09	0.0019409
396466.283768577.28	396466.28	3768577	0	0	4.25921E-05	0	3.54934E-05	0	7.09868E-05	7.09868E-05	0	0	0	0	2.26307E-09	2.26307E-09	0.0022631
396566.283768577.28	396566.28	3768577	0	0	5.00234E-05	0	4.16862E-05	0	8.33724E-05	8.33724E-05	0	0	0	0	2.65792E-09	2.65792E-09	0.0026579
396866.283768577.28	396866.28	3768577	0	0	8.89868E-05	0	7.41557E-05	0	0.000148311	0.000148311	0	0	0	0	4.72818E-09	4.72818E-09	0.0047282
396966.283768577.28	396966.28	3768577	0	0	0.000112505	0	9.37545E-05	0	0.000187509	0.000187509	0	0	0	0	5.97781E-09	5.97781E-09	0.0059778
397066.283768577.28	397066.28	3768577	0	0	0.000145141	0	0.000120951	0	0.000241902	0.000241902	0	0	0	0	7.71187E-09	7.71187E-09	0.0077119
397166.283768577.28	397166.28	3768577	0	0	0.000194182	0	0.000161818	0	0.000323636	0.000323636	0	0	0	0	1.03176E-08	1.03176E-08	0.0103176
397266.283768577.28	397266.28	3768577	0	0	0.000259128	0	0.00021594	0	0.000431881	0.000431881	0	0	0	0	1.37684E-08	1.37684E-08	0.0137684
397366.283768577.28	397366.28	3768577	0	0	0.00033676	0	0.000280634	0	0.000561267	0.000561267	0	0	0	0	1.78933E-08	1.78933E-08	0.0178933
397466.283768577.28	397466.28	3768577	0	0	0.000389679	0	0.000324733	0	0.000649465	0.000649465	0	0	0	0	2.0705E-08	2.0705E-08	0.020705
397566.283768577.28	397566.28	3768577	0	0	0.000393618	0	0.000328015	0	0.00065603	0.00065603	0	0	0	0	2.09143E-08	2.09143E-08	0.0209143
397666.283768577.28	397666.28	3768577	0	0	0.000347095	0	0.000289246	0	0.000578491	0.000578491	0	0	0	0	1.84424E-08	1.84424E-08	0.0184424
397766.283768577.28	397766.28	3768577	0	0	0.000278519	0	0.000232099	0	0.000464199	0.000464199	0	0	0	0	1.47987E-08	1.47987E-08	0.0147987
397866.283768577.28	397866.28	3768577	0	0	0.000219356	0	0.000182797	0	0.000365594	0.000365594	0	0	0	0	1.16552E-08	1.16552E-08	0.0116552
396166.283768677.28	396166.28	3768677	0	0	2.70642E-05	0	2.25535E-05	0	4.5107E-05	4.5107E-05	0	0	0	0	1.43802E-09	1.43802E-09	0.001438
396266.283768677.28	396266.28	3768677	0	0	3.05115E-05	0	2.54262E-05	0	5.08525E-05	5.08525E-05	0	0	0	0	1.62118E-09	1.62118E-09	0.0016212
396366.283768677.28	396366.28	3768677	0	0	3.44804E-05	0	2.87337E-05	0	5.74673E-05	5.74673E-05	0	0	0	0	1.83207E-09	1.83207E-09	0.0018321
396466.283768677.28	396466.28	3768677	0	0	3.95908E-05	0	3.29924E-05	0	6.59847E-05	6.59847E-05	0	0	0	0	2.1036E-09	2.1036E-09	0.0021036
396566.283768677.28	396566.28	3768677	0	0	4.58731E-05	0	3.82276E-05	0	7.64551E-05	7.64551E-05	0	0	0	0	2.4374E-09	2.4374E-09	0.0024374
396666.283768677.28	396666.28	3768677	0	0	5.36824E-05	0	4.47353E-05	0	8.94706E-05	8.94706E-05	0	0	0	0	2.85233E-09	2.85233E-09	0.0028523
396766.283768677.28	396766.28	3768677	0	0	6.35782E-05	0	5.29818E-05	0	0.000105964	0.000105964	0	0	0	0	3.37813E-09	3.37813E-09	0.0033781
396866.283768677.28	396866.28	3768677	0	0	7.68079E-05	0	6.40066E-05	0	0.000128013	0.000128013	0	0	0	0	4.08108E-09	4.08108E-09	0.0040811
396966.283768677.28	396966.28	3768677	0	0	9.43996E-05	0	7.86664E-05	0	0.000157333	0.000157333	0	0	0	0	5.01579E-09	5.01579E-09	0.0050158
397066.283768677.28	397066.28	3768677	0	0	0.000118213	0	9.85109E-05	0	0.000197022	0.000197022	0	0	0	0	6.28108E-09	6.28108E-09	0.0062811
397166.283768677.28	397166.28	3768677	0	0	0.000148657	0	0.00012388	0	0.000247761	0.000247761	0	0	0	0	7.89865E-09	7.89865E-09	0.0078986
397366.283768677.28	397366.28	3768677	0	0	0.000233145	0	0.000194288	0	0.000388575	0.000388575	0	0	0	0	1.23878E-08	1.23878E-08	0.0123878
397466.283768677.28	397466.28	3768677	0	0	0.00026631	0	0.000221925	0	0.00044385	0.00044385	0	0	0	0	1.415E-08	1.415E-08	0.01415
397566.283768677.28	397566.28	3768677	0	0	0.000275193	0	0.000229328	0	0.000458655	0.000458655	0	0	0	0	1.4622E-08	1.4622E-08	0.014622
397666.283768677.28	397666.28	3768677	0	0	0.00025711	0	0.000214258	0	0.000428517	0.000428517	0	0	0	0	1.36612E-08	1.36612E-08	0.0136612
397766.283768677.28	397766.28	3768677	0	0	0.000220014	0	0.000183345	0	0.00036669	0.00036669	0	0	0	0	1.16901E-08	1.16901E-08	0.0116901
397866.283768677.28	397866.28	3768677	0	0	0.000182525	0	0.000152104	0	0.000304208	0.000304208	0	0	0	0	9.69818E-09	9.69818E-09	0.0096982
396166.283768777.28	396166.28	3768777	0	0	2.58471E-05	0	2.15392E-05	0	4.30785E-05	4.30785E-05	0	0	0	0	1.37335E-09	1.37335E-09	0.0013733
396266.283768777.28	396266.28	3768777	0	0	2.87727E-05	0	2.39773E-05	0	4.79545E-05	4.79545E-05	0	0	0	0	1.5288E-09	1.5288E-09	0.0015288
396366.283768777.28	396366.28	3768777	0	0	3.25375E-05	0	2.71146E-05	0	5.42292E-05	5.42292E-05	0	0	0	0	1.72883E-09	1.72883E-09	0.0017288
396466.283768777.28	396466.28	3768777	0	0	3.6771E-05	0	3.06425E-05	0	6.1285E-05	6.1285E-05	0	0	0	0	1.95377E-09	1.95377E-09	0.0019538
396566.283768777.28	396566.28	3768777	0	0	4.17832E-05	0	3.48193E-05	0	6.96387E-05	6.96387E-05	0	0	0	0	2.22009E-09	2.22009E-09	0.0022201
396666.283768777.28	396666.28	3768777	0	0	4.82166E-05	0	4.01805E-05	0	8.0361E-05	8.0361E-05	0	0	0	0	2.56192E-09	2.56192E-09	0.0025619
396766.283768777.28	396766.28	3768777	0	0	5.64342E-05	0	4.70285E-05	0	9.40569E-05	9.40569E-05	0	0	0	0	2.99855E-09	2.99855E-09	0.0029985
396866.283768777.28	396866.28	3768777	0	0	6.69272E-05	0	5.57727E-05	0	0.000111545	0.000111545	0	0	0	0	3.55608E-09	3.55608E-09	0.0035561
396966.283768777.28	396966.28	3768777	0	0	8.01947E-05	0	6.68289E-05	0	0.000133658	0.000133658	0	0	0	0	4.26103E-09	4.26103E-09	0.004261
397066.283768777.28	397066.28	3768777	0	0	9.70683E-05	0	8.08902E-05	0	0.00016178	0.00016178	0	0	0	0	5.15758E-09	5.15758E-09	0.0051576

Garvey Reservoir Rehab - Unmitigated Proposed Pump Station			Demolition - 2025	Demolition - 2026	Site Preparation - 203	Site Preparation - 202	Grading - 2034	Grading - 2026	Infrastructure - 203	Infrastructure - 203	Paving - 2025	Architectural Coating - 2	Child Risk				
Unique Identifier	X (UTM)	Y (UTM)	2025	1900	2034	1900	2034	1900	2034	2035	1900	1900	3rd Trimester	0<2	2<16	Total	per million
397166.283768777.28	397166.28	3768777	0	0	0.000117291	0	9.77423E-05	0	0.000195485	0.000195485	0	0	0	0	6.23208E-09	6.23208E-09	0.0062321
397266.283768777.28	397266.28	3768777	0	0	0.000143304	0	0.00011942	0	0.00023884	0.00023884	0	0	0	0	7.61426E-09	7.61426E-09	0.0076143
397366.283768777.28	397366.28	3768777	0	0	0.000169378	0	0.000141148	0	0.000282297	0.000282297	0	0	0	0	8.99966E-09	8.99966E-09	0.0089997
397466.283768777.28	397466.28	3768777	0	0	0.000189321	0	0.000157767	0	0.000315535	0.000315535	0	0	0	0	1.00593E-08	1.00593E-08	0.0100593
397566.283768777.28	397566.28	3768777	0	0	0.000197486	0	0.000164571	0	0.000329143	0.000329143	0	0	0	0	1.04931E-08	1.04931E-08	0.0104931
397666.283768777.28	397666.28	3768777	0	0	0.000191173	0	0.000159311	0	0.000318622	0.000318622	0	0	0	0	1.01577E-08	1.01577E-08	0.0101577
397766.283768777.28	397766.28	3768777	0	0	0.000172893	0	0.000144078	0	0.000288156	0.000288156	0	0	0	0	9.18644E-09	9.18644E-09	0.0091864
397866.283768777.28	397866.28	3768777	0	0	0.000150327	0	0.000125273	0	0.000250545	0.000250545	0	0	0	0	7.98742E-09	7.98742E-09	0.0079874
396166.283768877.28	396166.28	3768877	0	0	2.43805E-05	0	2.03171E-05	0	4.06341E-05	4.06341E-05	0	0	0	0	1.29542E-09	1.29542E-09	0.0012954
396266.283768877.28	396266.28	3768877	0	0	2.71474E-05	0	2.26228E-05	0	4.52456E-05	4.52456E-05	0	0	0	0	1.44244E-09	1.44244E-09	0.0014424
396366.283768877.28	396366.28	3768877	0	0	3.01335E-05	0	2.51112E-05	0	5.02225E-05	5.02225E-05	0	0	0	0	1.6011E-09	1.6011E-09	0.0016011
396466.283768877.28	396466.28	3768877	0	0	3.41326E-05	0	2.84439E-05	0	5.68877E-05	5.68877E-05	0	0	0	0	1.81359E-09	1.81359E-09	0.0018136
396566.283768877.28	396566.28	3768877	0	0	3.84796E-05	0	3.20663E-05	0	6.41326E-05	6.41326E-05	0	0	0	0	2.04455E-09	2.04455E-09	0.0020446
396666.283768877.28	396666.28	3768877	0	0	4.36807E-05	0	3.64006E-05	0	7.28012E-05	7.28012E-05	0	0	0	0	2.32091E-09	2.32091E-09	0.0023209
396766.283768877.28	396766.28	3768877	0	0	5.05148E-05	0	4.20957E-05	0	8.41913E-05	8.41913E-05	0	0	0	0	2.68403E-09	2.68403E-09	0.002684
396866.283768877.28	396866.28	3768877	0	0	5.97302E-05	0	4.97752E-05	0	9.95504E-05	9.95504E-05	0	0	0	0	3.17368E-09	3.17368E-09	0.0031737
396966.283768877.28	396966.28	3768877	0	0	6.98982E-05	0	5.82485E-05	0	0.000116497	0.000116497	0	0	0	0	3.71394E-09	3.71394E-09	0.0037139
397066.283768877.28	397066.28	3768877	0	0	8.14043E-05	0	6.78369E-05	0	0.000135674	0.000135674	0	0	0	0	4.3253E-09	4.3253E-09	0.0043253
397166.283768877.28	397166.28	3768877	0	0	9.54656E-05	0	7.95546E-05	0	0.000159109	0.000159109	0	0	0	0	5.07242E-09	5.07242E-09	0.0050724
397266.283768877.28	397266.28	3768877	0	0	0.000112468	0	9.3723E-05	0	0.000187446	0.000187446	0	0	0	0	5.9758E-09	5.9758E-09	0.0059758
397366.283768877.28	397366.28	3768877	0	0	0.000128615	0	0.00010718	0	0.000214359	0.000214359	0	0	0	0	6.83379E-09	6.83379E-09	0.0068338
397466.283768877.28	397466.28	3768877	0	0	0.000142269	0	0.000118557	0	0.000237114	0.000237114	0	0	0	0	7.55923E-09	7.55923E-09	0.0075592
397566.283768877.28	397566.28	3768877	0	0	0.000149375	0	0.000124479	0	0.000248958	0.000248958	0	0	0	0	7.93681E-09	7.93681E-09	0.0079368
397666.283768877.28	397666.28	3768877	0	0	0.000146653	0	0.000122211	0	0.000244422	0.000244422	0	0	0	0	7.7922E-09	7.7922E-09	0.0077922
397766.283768877.28	397766.28	3768877	0	0	0.000137226	0	0.000114355	0	0.00022871	0.00022871	0	0	0	0	7.29131E-09	7.29131E-09	0.0072913
397866.283768877.28	397866.28	3768877	0	0	0.000124132	0	0.000103444	0	0.000206887	0.000206887	0	0	0	0	6.5956E-09	6.5956E-09	0.0065956
3964253767739	396425	3767739	0	0	4.7128E-05	0	3.92733E-05	0	7.85467E-05	7.85467E-05	0	0	0	0	2.50408E-09	2.50408E-09	0.0025041
3964753767739	396475	3767739	0	0	5.14371E-05	0	4.28643E-05	0	8.57285E-05	8.57285E-05	0	0	0	0	2.73304E-09	2.73304E-09	0.002733
3965253767739	396525	3767739	0	0	5.5852E-05	0	4.65434E-05	0	9.30867E-05	9.30867E-05	0	0	0	0	2.96762E-09	2.96762E-09	0.0029676
3965753767739	396575	3767739	0	0	6.15975E-05	0	5.13313E-05	0	0.000102663	0.000102663	0	0	0	0	3.27289E-09	3.27289E-09	0.0032729
3966253767739	396625	3767739	0	0	6.66475E-05	0	5.55396E-05	0	0.000111079	0.000111079	0	0	0	0	3.54122E-09	3.54122E-09	0.0035412
3966753767739	396675	3767739	0	0	7.4041E-05	0	6.17008E-05	0	0.000123402	0.000123402	0	0	0	0	3.93406E-09	3.93406E-09	0.0039341
3967253767739	396725	3767739	0	0	8.48364E-05	0	7.0697E-05	0	0.000141394	0.000141394	0	0	0	0	4.50766E-09	4.50766E-09	0.0045077
3967753767739	396775	3767739	0	0	9.49213E-05	0	7.91011E-05	0	0.000158202	0.000158202	0	0	0	0	5.0435E-09	5.0435E-09	0.0050435
3968253767739	396825	3767739	0	0	0.000109504	0	9.12535E-05	0	0.000182507	0.000182507	0	0	0	0	5.81834E-09	5.81834E-09	0.0058183
3968753767739	396875	3767739	0	0	0.000127066	0	0.000105888	0	0.000211776	0.000211776	0	0	0	0	6.75145E-09	6.75145E-09	0.0067514
3969253767739	396925	3767739	0	0	0.000146615	0	0.00012218	0	0.000244359	0.000244359	0	0	0	0	7.7902E-09	7.7902E-09	0.0077902
3969753767739	396975	3767739	0	0	0.000169499	0	0.000141249	0	0.000282498	0.000282498	0	0	0	0	9.00608E-09	9.00608E-09	0.0090061
3970253767739	397025	3767739	0	0	0.000195391	0	0.000162826	0	0.000325652	0.000325652	0	0	0	0	1.03818E-08	1.03818E-08	0.0103818
3970753767739	397075	3767739	0	0	0.000223393	0	0.000186161	0	0.000372322	0.000372322	0	0	0	0	1.18697E-08	1.18697E-08	0.0118697
3971253767739	397125	3767739	0	0	0.000253527	0	0.000211272	0	0.000422544	0.000422544	0	0	0	0	1.34708E-08	1.34708E-08	0.0134708
3971753767739	397175	3767739	0	0	0.000285928	0	0.000238273	0	0.000476547	0.000476547	0	0	0	0	1.51924E-08	1.51924E-08	0.0151924
3972253767739	397225	3767739	0	0	0.000316636	0	0.000263863	0	0.000527727	0.000527727	0	0	0	0	1.6824E-08	1.6824E-08	0.016824
3972753767739	397275	3767739	0	0	0.000346248	0	0.00028854	0	0.00057708	0.00057708	0	0	0	0	1.83974E-08	1.83974E-08	0.0183974
3973253767739	397325	3767739	0	0	0.000357898	0	0.000298248	0	0.000596496	0.000596496	0	0	0	0	1.90164E-08	1.90164E-08	0.0190164
3973753767739	397375	3767739	0	0	0.000357066	0	0.000297555	0	0.00059511	0.00059511	0	0	0	0	1.89722E-08	1.89722E-08	0.0189722
3974253767739	397425	3767739	0	0	0.000349174	0	0.000290978	0	0.000581956	0.000581956	0	0	0	0	1.85528E-08	1.85528E-08	0.0185528
3974753767739	397475	3767739	0	0	0.000341463	0	0.000284552	0	0.000569104	0.000569104	0	0	0	0	1.81431E-08	1.81431E-08	0.0181431
3975253767739	397525	3767739	0	0	0.000314996	0	0.000262496	0	0.000524993	0.000524993	0	0	0	0	1.67368E-08	1.67368E-08	0.0167368
3964253767789	396425	3767789	0	0	4.78386E-05	0	3.98655E-05	0	7.9731E-05	7.9731E-05	0	0	0	0	2.54184E-09	2.54184E-09	0.0025418
3964753767789	396475	3767789	0	0	5.20343E-05	0	4.33619E-05	0	8.67239E-05	8.67239E-05	0	0	0	0	2.76477E-09	2.76477E-09	0.0027648
3965253767789	396525	3767789	0	0	5.6608E-05	0	4.71734E-05	0	9.43467E-05	9.43467E-05	0	0	0	0	3.00779E-09	3.00779E-09	0.0030078
3965753767789	396575	3767789	0	0	6.18697E-05	0	5.15581E-05	0	0.000103116	0.000103116	0	0	0	0	3.28735E-09	3.28735E-09	0.0032874
3966253767789	396625	3767789	0	0	6.85601E-05	0	5.71334E-05	0	0.000114267	0.000114267	0	0	0	0	3.64284E-09	3.64284E-09	0.0036428
3966753767789	396675	3767789	0	0	7.70423E-05	0	6.42019E-05	0	0.000128404	0.000128404	0	0	0	0	4.09353E-09	4.09353E-09	0.0040935
3967253767789	396725	3767789	0	0	8.8503E-05	0	7.37525E-05	0	0.000147505	0.000147505	0	0	0	0	4.70248E-09	4.70248E-09	0.0047025
3967753767789	396775	3767789	0	0	0.000100705	0	8.39204E-05	0	0.000167841	0.000167841	0	0	0	0	5.35079E-09	5.35079E-09	0.0053508
3968253767789	396825	3767789	0	0	0.000116731	0	9.72762E-05	0	0.000194552	0.000194552	0	0	0	0	6.20235E-09	6.20235E-09	0.0062024
3968753767789	396875	3767789	0	0	0.000136001	0	0.000113335	0	0.000226669	0.000226669	0	0	0	0	7.22624E-09	7.22624E-09	0.0072262
3969253767789	396925	3767789	0	0	0.00015921	0	0.000132675	0	0.00026535	0.00026535	0	0	0	0	8.4594E-09	8.4594E-09	0.0084594
3969753767789	396975	3767789	0	0	0.000188255	0	0.000156879	0	0.000313758	0.000313758	0	0	0	0	1.00027E-08	1.00027E-08	0.0100027
3970253767789	397025	3767789	0	0	0.000222599	0	0.000185499	0	0.000370999	0.000370999	0	0	0	0	1.18275E-08	1.18275E-08	0.0118275
3970753767789	397075	3767789	0	0	0.000262288	0	0.000218574	0	0.000437147	0.000437147	0	0	0	0	1.39363E-08	1.39363E-08	0.0139363
3971253767789	397125	3767789	0	0	0.000307458	0	0.000256215	0	0.000512431	0.000512431	0	0	0	0	1.63364E-08	1.63364E-08	0.0163364
3971753767789	397175	3767789	0	0	0.000358245	0	0.000298538	0	0.000597076	0.000597076	0	0	0	0	1.90348E-08	1.90348E-08	0.0190348
3972253767789	397225	3767789	0	0	0.000410386	0	0.000341988	0	0.000683976	0.000683976	0	0	0	0	2.18052E-08	2.18052E-08	0.0218052
3972753767789	397275	3767789	0	0	0.000466222	0	0.000388519	0	0.000777037	0.000777037	0	0	0	0	2.47721E-08	2.47721E-08	0.0247721
3973253767789	397325	3767789	0	0	0.000499765	0	0.000416471	0	0.000832942	0.000832942	0	0	0	0	2.65543E-08	2.65543E-08	0.0265543
3973753767789	397375	3767789	0	0	0.000503659	0	0.000419716	0	0.000839431	0.000839431	0	0	0	0	2.67612E-08	2.67612E-08	0.0267612
3974253767789	397425	3767789	0	0	0.000488395	0	0.000406996	0	0.000813992	0.000813992	0	0	0	0	2.59502E-08	2.59502E-08	0.0259502
3974753767789	397475	3767789	0	0	0.000472051	0	0.000393376	0	0.000786752	0.000786752	0	0	0	0	2.50817E-08	2.50817E-08	0.0250817
3975253767789	397525	3767789	0	0	0.000423857	0	0.000353214	0	0.000706429	0.000706429	0	0	0	0	2.2521E-08	2.2521E-08	0.022521
3964253767839	396425	3767839	0	0	4.84132E-05	0	4.03443E-05	0	8.06886E-05	8.06886E-05	0	0	0	0	2.57236E-09	2.57236E-09	0.0025724
3964753767839	396475	3767839	0	0	5.28886E-05	0	4.40738E-05	0	8.81477E-05	8.81477E-05	0	0	0	0	2.81016E-09	2.81016E-09	0.0028102
3965253767839	396525	3767839	0	0	5.71599E-05	0	4.76332E-05	0	9.52665E-05	9.52665E-05	0	0	0	0	3.03711E-09	3.03711E-09	0.0030371
3965753767839	396575	3767839	0	0	6.30868E-05	0	5.25723E-05	0	0.000105145	0.000105145	0	0	0	0	3.35203E-09	3.35203E-09	0.003352
3966253767839	396625	3767839	0	0	7.02611E-05	0	5.85509E-05	0	0.000117102	0.000117102	0	0	0	0	3.73322E-09	3.73322E-09	0.0037332

Garvey Reservoir Rehab - Unmitigated Proposed Pump Station			Demolition - 2025	Demolition - 2026	Site Preparation - 203	Site Preparation - 202	Grading - 2034	Grading - 2026	Infrastructure - 203	Infrastructure - 203	Paving - 2025	Architectural Coating - 2	Child Risk				
Unique Identifier	X (UTM)	Y (UTM)	2025	1900	2034	1900	2034	1900	2034	2035	1900	1900	3rd Trimester	0<2	2<16	Total	per million
3966753767839	396675	3767839	0	0	8.07768E-05	0	6.7314E-05	0	0.000134628	0.000134628	0	0	0	0	4.29196E-09	4.29196E-09	0.004292
3967253767839	396725	3767839	0	0	9.20788E-05	0	7.67323E-05	0	0.000153465	0.000153465	0	0	0	0	4.89247E-09	4.89247E-09	0.0048925
3967753767839	396775	3767839	0	0	0.000105686	0	8.80721E-05	0	0.000176144	0.000176144	0	0	0	0	5.6155E-09	5.6155E-09	0.0056155
3968253767839	396825	3767839	0	0	0.000122779	0	0.000102316	0	0.000204632	0.000204632	0	0	0	0	6.5237E-09	6.5237E-09	0.0065237
3968753767839	396875	3767839	0	0	0.000144257	0	0.000120214	0	0.000240428	0.000240428	0	0	0	0	7.66487E-09	7.66487E-09	0.0076649
3969253767839	396925	3767839	0	0	0.000171192	0	0.00014266	0	0.000285321	0.000285321	0	0	0	0	9.09606E-09	9.09606E-09	0.0090961
3969753767839	396975	3767839	0	0	0.000206217	0	0.000171848	0	0.000343695	0.000343695	0	0	0	0	1.0957E-08	1.0957E-08	0.010957
3970253767839	397025	3767839	0	0	0.000250314	0	0.000208595	0	0.000417189	0.000417189	0	0	0	0	1.33E-08	1.33E-08	0.0133
3970753767839	397075	3767839	0	0	0.000303512	0	0.000252927	0	0.000505854	0.000505854	0	0	0	0	1.61267E-08	1.61267E-08	0.0161267
3971253767839	397125	3767839	0	0	0.00036802	0	0.000306684	0	0.000613367	0.000613367	0	0	0	0	1.95542E-08	1.95542E-08	0.0195542
3971753767839	397175	3767839	0	0	0.000453545	0	0.000377954	0	0.000755908	0.000755908	0	0	0	0	2.40984E-08	2.40984E-08	0.0240984
3972253767839	397225	3767839	0	0	0.000555807	0	0.000463172	0	0.000926344	0.000926344	0	0	0	0	2.9532E-08	2.9532E-08	0.029532
3972753767839	397275	3767839	0	0	0.000657305	0	0.000547754	0	0.001095508	0.001095508	0	0	0	0	3.49249E-08	3.49249E-08	0.0349249
3973253767839	397325	3767839	0	0	0.000738119	0	0.0006151	0	0.001230199	0.001230199	0	0	0	0	3.92189E-08	3.92189E-08	0.0392189
3973753767839	397375	3767839	0	0	0.000764957	0	0.000637464	0	0.001274928	0.001274928	0	0	0	0	4.06449E-08	4.06449E-08	0.0406449
3974753767839	397475	3767839	0	0	0.000673747	0	0.000561456	0	0.001122912	0.001122912	0	0	0	0	3.57986E-08	3.57986E-08	0.0357986
3975253767839	397525	3767839	0	0	0.000596123	0	0.000496769	0	0.000993538	0.000993538	0	0	0	0	3.16741E-08	3.16741E-08	0.0316741
3964253767889	396425	3767889	0	0	4.87836E-05	0	4.0653E-05	0	8.1306E-05	8.1306E-05	0	0	0	0	2.59205E-09	2.59205E-09	0.002592
3964753767889	396475	3767889	0	0	5.26316E-05	0	4.38596E-05	0	8.77193E-05	8.77193E-05	0	0	0	0	2.7965E-09	2.7965E-09	0.0027965
3965253767889	396525	3767889	0	0	5.78478E-05	0	4.82065E-05	0	9.64131E-05	9.64131E-05	0	0	0	0	3.07366E-09	3.07366E-09	0.0030737
3965753767889	396575	3767889	0	0	6.44929E-05	0	5.37441E-05	0	0.000107488	0.000107488	0	0	0	0	3.42674E-09	3.42674E-09	0.0034267
3974753767889	397475	3767889	0	0	0.001090279	0	0.000908566	0	0.001817132	0.001817132	0	0	0	0	5.79304E-08	5.79304E-08	0.0579304
3975253767889	397525	3767889	0	0	0.000881892	0	0.00073491	0	0.001469821	0.001469821	0	0	0	0	4.68581E-08	4.68581E-08	0.0468581
3964253767939	396425	3767939	0	0	4.90104E-05	0	4.0842E-05	0	8.1684E-05	8.1684E-05	0	0	0	0	2.6041E-09	2.6041E-09	0.0026041
3964753767939	396475	3767939	0	0	5.29566E-05	0	4.41305E-05	0	8.82611E-05	8.82611E-05	0	0	0	0	2.81377E-09	2.81377E-09	0.0028138
3965253767939	396525	3767939	0	0	5.84678E-05	0	4.87231E-05	0	9.74463E-05	9.74463E-05	0	0	0	0	3.1066E-09	3.1066E-09	0.0031066
3974753767939	397475	3767939	0	0	0.001933964	0	0.001611637	0	0.003223274	0.003223274	0	0	0	0	1.02758E-07	1.02758E-07	0.1027584
3975253767939	397525	3767939	0	0	0.001367657	0	0.001139714	0	0.002279428	0.002279428	0	0	0	0	7.26685E-08	7.26685E-08	0.0726685
3964253767989	396425	3767989	0	0	4.86475E-05	0	4.05396E-05	0	8.10792E-05	8.10792E-05	0	0	0	0	2.58482E-09	2.58482E-09	0.0025848
3964753767989	396475	3767989	0	0	5.3191E-05	0	4.43258E-05	0	8.86516E-05	8.86516E-05	0	0	0	0	2.82623E-09	2.82623E-09	0.0028262
3974753767989	397475	3767989	0	0	0.003642524	0	0.003035437	0	0.006070874	0.006070874	0	0	0	0	1.9354E-07	1.9354E-07	0.1935402
3975253767989	397525	3767989	0	0	0.002062557	0	0.001718797	0	0.003437595	0.003437595	0	0	0	0	1.09591E-07	1.09591E-07	0.1095909
3964253768039	396425	3768039	0	0	4.85946E-05	0	4.04955E-05	0	8.0991E-05	8.0991E-05	0	0	0	0	2.582E-09	2.582E-09	0.002582
3964753768039	396475	3768039	0	0	5.33422E-05	0	4.44518E-05	0	8.89036E-05	8.89036E-05	0	0	0	0	2.83426E-09	2.83426E-09	0.0028343
3974753768039	397475	3768039	0	0	0.008847001	0	0.007372501	0	0.014745001	0.014745001	0	0	0	0	4.70072E-07	4.70072E-07	0.4700725
3975253768039	397525	3768039	0	0	0.00340541	0	0.002837842	0	0.005675683	0.005675683	0	0	0	0	1.80941E-07	1.80941E-07	0.1809415
3964253768089	396425	3768089	0	0	4.85039E-05	0	4.04199E-05	0	8.08398E-05	8.08398E-05	0	0	0	0	2.57718E-09	2.57718E-09	0.0025772
3964753768089	396475	3768089	0	0	5.33271E-05	0	4.44392E-05	0	8.88784E-05	8.88784E-05	0	0	0	0	2.83346E-09	2.83346E-09	0.0028335
3974753768089	397475	3768089	0	0	0.014528767	0	0.012107306	0	0.024214612	0.024214612	0	0	0	0	7.71965E-07	7.71965E-07	0.7719648
3975253768089	397525	3768089	0	0	0.004393231	0	0.003661026	0	0.007322051	0.007322051	0	0	0	0	2.33428E-07	2.33428E-07	0.2334279
3964253768139	396425	3768139	0	0	4.86702E-05	0	4.05585E-05	0	8.1117E-05	8.1117E-05	0	0	0	0	2.58602E-09	2.58602E-09	0.002586
3964753768139	396475	3768139	0	0	5.29264E-05	0	4.41053E-05	0	8.82107E-05	8.82107E-05	0	0	0	0	2.81217E-09	2.81217E-09	0.0028122
3974253768139	397425	3768139	0	0	0.021123013	0	0.017602511	0	0.035205022	0.035205022	0	0	0	0	1.12234E-06	1.12234E-06	1.1223405
3974753768139	397475	3768139	0	0	0.010020809	0	0.008350674	0	0.016701348	0.016701348	0	0	0	0	5.32441E-07	5.32441E-07	0.532441
3975253768139	397525	3768139	0	0	0.004332858	0	0.003610715	0	0.00722143	0.00722143	0	0	0	0	2.3022E-07	2.3022E-07	0.2302201
3964253768189	396425	3768189	0	0	4.81032E-05	0	4.0086E-05	0	8.0172E-05	8.0172E-05	0	0	0	0	2.55589E-09	2.55589E-09	0.0025559
3964753768189	396475	3768189	0	0	5.23443E-05	0	4.36202E-05	0	8.72405E-05	8.72405E-05	0	0	0	0	2.78124E-09	2.78124E-09	0.0027812
3973753768189	397375	3768189	0	0	0.005663903	0	0.004719919	0	0.009439838	0.009439838	0	0	0	0	3.00943E-07	3.00943E-07	0.3009432
3974253768189	397425	3768189	0	0	0.006560658	0	0.005467215	0	0.01093443	0.01093443	0	0	0	0	3.48591E-07	3.48591E-07	0.348591
3974753768189	397475	3768189	0	0	0.005589264	0	0.00465772	0	0.009315441	0.009315441	0	0	0	0	2.96977E-07	2.96977E-07	0.2969774
3975253768189	397525	3768189	0	0	0.003473494	0	0.002894578	0	0.005789157	0.005789157	0	0	0	0	1.84559E-07	1.84559E-07	0.184559
3964253768239	396425	3768239	0	0	4.73926E-05	0	3.94938E-05	0	7.89877E-05	7.89877E-05	0	0	0	0	2.51814E-09	2.51814E-09	0.0025181
3964753768239	396475	3768239	0	0	5.15732E-05	0	4.29777E-05	0	8.59553E-05	8.59553E-05	0	0	0	0	2.74027E-09	2.74027E-09	0.0027403
3973753768239	397375	3768239	0	0	0.003016857	0	0.002514048	0	0.005028096	0.005028096	0	0	0	0	1.60296E-07	1.60296E-07	0.1602963
3974253768239	397425	3768239	0	0	0.003139886	0	0.002616572	0	0.005233143	0.005233143	0	0	0	0	1.66833E-07	1.66833E-07	0.1668333
3974753768239	397475	3768239	0	0	0.002914747	0	0.002428956	0	0.004857911	0.004857911	0	0	0	0	1.54871E-07	1.54871E-07	0.1548708
3975253768239	397525	3768239	0	0	0.002281286	0	0.001901071	0	0.003802143	0.003802143	0	0	0	0	1.21213E-07	1.21213E-07	0.1212128
3964253768289	396425	3768289	0	0	4.64779E-05	0	3.87315E-05	0	7.74631E-05	7.74631E-05	0	0	0	0	2.46953E-09	2.46953E-09	0.0024695
3964753768289	396475	3768289	0	0	5.06509E-05	0	4.22091E-05	0	8.44181E-05	8.44181E-05	0	0	0	0	2.69126E-09	2.69126E-09	0.0026913
3973253768289	397325	3768289	0	0	0.0013753	0	0.001146083	0	0.002292167	0.002292167	0	0	0	0	7.30746E-08	7.30746E-08	0.0730746
3973753768289	397375	3768289	0	0	0.001824936	0	0.00152078	0	0.00304156	0.00304156	0	0	0	0	9.69653E-08	9.69653E-08	0.0969653
3974253768289	397425	3768289	0	0	0.002155422	0	0.001796185	0	0.00359237	0.00359237	0	0	0	0	1.14525E-07	1.14525E-07	0.1145252
3974753768289	397475	3768289	0	0	0.002126687	0	0.001772239	0	0.003544478	0.003544478	0	0	0	0	1.12998E-07	1.12998E-07	0.1129984
3975253768289	397525	3768289	0	0	0.001788211	0	0.001490175	0	0.002980351	0.002980351	0	0	0	0	9.5014E-08	9.5014E-08	0.095014
3964253768339	396425	3768339	0	0	4.56387E-05	0	3.80323E-05	0	7.60645E-05	7.60645E-05	0	0	0	0	2.42495E-09	2.42495E-09	0.0024249
3964753768339	396475	3768339	0	0	4.96076E-05	0	4.13397E-05	0	8.26794E-05	8.26794E-05	0	0	0	0	2.63583E-09	2.63583E-09	0.0026358
3965253768339	396525	3768339	0	0	5.44988E-05	0	4.54157E-05	0	9.08314E-05	9.08314E-05	0	0	0	0	2.89572E-09	2.89572E-09	0.0028957
3972753768339	397275	3768339	0	0	0.000746246	0	0.000621872	0	0.001243744	0.001243744	0	0	0	0	3.96507E-08	3.96507E-08	0.0396507
3973253768339	397325	3768339	0	0	0.000977176	0	0.000814314	0	0.001628627	0.001628627	0	0	0	0	5.19208E-08	5.19208E-08	0.0519208
3973753768339	397375	3768339	0	0	0.001219454	0	0.001016212	0	0.002032423	0.002032423	0	0	0	0	6.47939E-08	6.47939E-08	0.0647939
3974253768339	397425	3768339	0	0	0.001406862	0	0.001172385	0	0.002344771	0.002344771	0	0	0	0	7.47516E-08	7.47516E-08	0.0747516
3974753768339	397475	3768339	0	0	0.001446385	0	0.001205321	0	0.002410642	0.002410642	0	0	0	0	7.68516E-08	7.68516E-08	0.0768516
3975253768339	397525	3768339	0	0	0.001334545	0	0.001112121	0	0.002224242	0.002224242	0	0	0	0	7.09091E-08	7.09091E-08	0.0709091
3964253768389	396425	3768389	0	0	4.45728E-05	0	3.7144E-05	0	7.4288E-05	7.4288E-05	0	0	0	0	2.36831E-09	2.36831E-09	0.0023683
3964753768389	396475	3768389	0	0	4.84056E-05	0	4.0338E-05	0	8.0676E-05	8.0676E-05	0	0	0	0	2.57196E-09	2.57196E-09	0.002572
3965253768389	396525	3768389	0	0	5.3002E-05	0	4.41683E-05	0	8.83367E-05	8.83367E-05	0	0	0	0	2.81618E-09	2.81618E-09	0.0028162
3972253768389	397225	3768389	0	0	0.000459645	0	0.000383038	0	0.000766076	0.000766076	0	0	0	0	2.44226E-08	2.44226E-08	0.0244226

Garvey Reservoir Rehab - Unmitigated Proposed Pump Station			Demolition - 2025	Demolition - 2026	Site Preparation - 203	Site Preparation - 202	Grading - 2034	Grading - 2026	Infrastructure - 203	Infrastructure - 203	Paving - 2025	Architectural Coating - 2	Child Risk					
Unique Identifier	X (UTM)	Y (UTM)	2025	1900	2034	1900	2034	1900	2034	2035	1900	1900	3rd Trimester	0<2	2<16	Total	per million
3972753768389	397275	3768389	0	0	0.000580784	0	0.000483987	0	0.000967974	0.000967974	0	0	0	0	3.08591E-08	3.08591E-08	0.0308591
3973253768389	397325	3768389	0	0	0.000725532	0	0.00060461	0	0.001209221	0.001209221	0	0	0	0	3.85501E-08	3.85501E-08	0.0385501
3973753768389	397375	3768389	0	0	0.000870847	0	0.000725706	0	0.001451412	0.001451412	0	0	0	0	4.62712E-08	4.62712E-08	0.0462712
3974253768389	397425	3768389	0	0	0.000980359	0	0.000816966	0	0.001633932	0.001633932	0	0	0	0	5.209E-08	5.209E-08	0.05209
3974753768389	397475	3768389	0	0	0.001019224	0	0.000849354	0	0.001698707	0.001698707	0	0	0	0	5.4155E-08	5.4155E-08	0.054155
3975253768389	397525	3768389	0	0	0.000973941	0	0.000811617	0	0.001623235	0.001623235	0	0	0	0	5.17489E-08	5.17489E-08	0.0517489
3964253768439	396425	3768439	0	0	4.36051E-05	0	3.63376E-05	0	7.26752E-05	7.26752E-05	0	0	0	0	2.31689E-09	2.31689E-09	0.0023169
3964753768439	396475	3768439	0	0	4.71204E-05	0	3.9267E-05	0	7.85341E-05	7.85341E-05	0	0	0	0	2.50368E-09	2.50368E-09	0.0025037
3965253768439	396525	3768439	0	0	5.13917E-05	0	4.28265E-05	0	8.56529E-05	8.56529E-05	0	0	0	0	2.73063E-09	2.73063E-09	0.0027306
3971753768439	397175	3768439	0	0	0.000301456	0	0.000251213	0	0.000502427	0.000502427	0	0	0	0	1.60174E-08	1.60174E-08	0.0160174
3972253768439	397225	3768439	0	0	0.000377893	0	0.000314911	0	0.000629822	0.000629822	0	0	0	0	2.00788E-08	2.00788E-08	0.0200788
3972753768439	397275	3768439	0	0	0.000461475	0	0.000384562	0	0.000769125	0.000769125	0	0	0	0	2.45198E-08	2.45198E-08	0.0245198
3973253768439	397325	3768439	0	0	0.000558558	0	0.000465465	0	0.00093093	0.00093093	0	0	0	0	2.96782E-08	2.96782E-08	0.0296782
3973753768439	397375	3768439	0	0	0.000655165	0	0.000545971	0	0.001091942	0.001091942	0	0	0	0	3.48113E-08	3.48113E-08	0.0348113
3974253768439	397425	3768439	0	0	0.000731799	0	0.000609833	0	0.001219666	0.001219666	0	0	0	0	3.88831E-08	3.88831E-08	0.0388831
3974753768439	397475	3768439	0	0	0.000760217	0	0.000633514	0	0.001267028	0.001267028	0	0	0	0	4.0393E-08	4.0393E-08	0.040393
3975253768439	397525	3768439	0	0	0.000742028	0	0.000618357	0	0.001236713	0.001236713	0	0	0	0	3.94266E-08	3.94266E-08	0.0394266
3964253768489	396425	3768489	0	0	4.23653E-05	0	3.53044E-05	0	7.06088E-05	7.06088E-05	0	0	0	0	2.25102E-09	2.25102E-09	0.002251
3964753768489	396475	3768489	0	0	4.57068E-05	0	3.8089E-05	0	7.61779E-05	7.61779E-05	0	0	0	0	2.42856E-09	2.42856E-09	0.0024286
3965253768489	396525	3768489	0	0	4.97361E-05	0	4.14468E-05	0	8.28936E-05	8.28936E-05	0	0	0	0	2.64266E-09	2.64266E-09	0.0026427
3970753768489	397075	3768489	0	0	0.000180446	0	0.000150371	0	0.000300743	0.000300743	0	0	0	0	9.58772E-09	9.58772E-09	0.0095877
3971253768489	397125	3768489	0	0	0.000213081	0	0.000177568	0	0.000355136	0.000355136	0	0	0	0	1.13218E-08	1.13218E-08	0.0113218
3971753768489	397175	3768489	0	0	0.000255915	0	0.000213263	0	0.000426526	0.000426526	0	0	0	0	1.35977E-08	1.35977E-08	0.0135977
3972253768489	397225	3768489	0	0	0.000310724	0	0.000258937	0	0.000517874	0.000517874	0	0	0	0	1.65099E-08	1.65099E-08	0.0165099
3972753768489	397275	3768489	0	0	0.000374401	0	0.000312001	0	0.000624001	0.000624001	0	0	0	0	1.98932E-08	1.98932E-08	0.0198932
3973253768489	397325	3768489	0	0	0.000440995	0	0.000367496	0	0.000734992	0.000734992	0	0	0	0	2.34316E-08	2.34316E-08	0.0234316
3973753768489	397375	3768489	0	0	0.000506002	0	0.000421669	0	0.000843337	0.000843337	0	0	0	0	2.68857E-08	2.68857E-08	0.0268857
3974253768489	397425	3768489	0	0	0.000558634	0	0.000465528	0	0.000931056	0.000931056	0	0	0	0	2.96822E-08	2.96822E-08	0.0296822
3974753768489	397475	3768489	0	0	0.000588382	0	0.000490318	0	0.000980636	0.000980636	0	0	0	0	3.12628E-08	3.12628E-08	0.0312628
3975253768489	397525	3768489	0	0	0.000586688	0	0.000488907	0	0.000977814	0.000977814	0	0	0	0	3.11728E-08	3.11728E-08	0.0311728
3964253768539	396425	3768539	0	0	4.10877E-05	0	3.42397E-05	0	6.84795E-05	6.84795E-05	0	0	0	0	2.18313E-09	2.18313E-09	0.0021831
3964753768539	396475	3768539	0	0	4.42779E-05	0	3.68983E-05	0	7.37966E-05	7.37966E-05	0	0	0	0	2.35264E-09	2.35264E-09	0.0023526
3965253768539	396525	3768539	0	0	4.79823E-05	0	3.99852E-05	0	7.99704E-05	7.99704E-05	0	0	0	0	2.54947E-09	2.54947E-09	0.0025495
3965753768539	396575	3768539	0	0	5.24048E-05	0	4.36706E-05	0	8.73413E-05	8.73413E-05	0	0	0	0	2.78445E-09	2.78445E-09	0.0027845
3970253768539	397025	3768539	0	0	0.000139585	0	0.000116321	0	0.000232641	0.000232641	0	0	0	0	7.41663E-09	7.41663E-09	0.0074166
3970753768539	397075	3768539	0	0	0.000161395	0	0.000134496	0	0.000268991	0.000268991	0	0	0	0	8.57548E-09	8.57548E-09	0.0085755
3971253768539	397125	3768539	0	0	0.000187643	0	0.000156369	0	0.000312738	0.000312738	0	0	0	0	9.97012E-09	9.97012E-09	0.0099701
3971753768539	397175	3768539	0	0	0.000220966	0	0.000184139	0	0.000368277	0.000368277	0	0	0	0	1.17407E-08	1.17407E-08	0.0117407
3972253768539	397225	3768539	0	0	0.00026027	0	0.000216892	0	0.000433783	0.000433783	0	0	0	0	1.38291E-08	1.38291E-08	0.0138291
3972753768539	397275	3768539	0	0	0.000309159	0	0.000257633	0	0.000515266	0.000515266	0	0	0	0	1.64267E-08	1.64267E-08	0.0164267
3973253768539	397325	3768539	0	0	0.00035656	0	0.000297133	0	0.000594266	0.000594266	0	0	0	0	1.89453E-08	1.89453E-08	0.0189453
3973753768539	397375	3768539	0	0	0.000402357	0	0.000335298	0	0.000670595	0.000670595	0	0	0	0	2.13787E-08	2.13787E-08	0.0213787
3974253768539	397425	3768539	0	0	0.000439491	0	0.000366242	0	0.000732485	0.000732485	0	0	0	0	2.33517E-08	2.33517E-08	0.0233517
3974753768539	397475	3768539	0	0	0.000463463	0	0.000386219	0	0.000772439	0.000772439	0	0	0	0	2.46254E-08	2.46254E-08	0.0246254
3975253768539	397525	3768539	0	0	0.000468294	0	0.000390245	0	0.00078049	0.00078049	0	0	0	0	2.48821E-08	2.48821E-08	0.0248821
3964253768589	396425	3768589	0	0	3.98328E-05	0	3.3194E-05	0	6.63879E-05	6.63879E-05	0	0	0	0	2.11646E-09	2.11646E-09	0.0021165
3964753768589	396475	3768589	0	0	4.27962E-05	0	3.56635E-05	0	7.1327E-05	7.1327E-05	0	0	0	0	2.27391E-09	2.27391E-09	0.0022739
3965253768589	396525	3768589	0	0	4.63191E-05	0	3.85992E-05	0	7.71985E-05	7.71985E-05	0	0	0	0	2.4611E-09	2.4611E-09	0.0024611
3965753768589	396575	3768589	0	0	5.02502E-05	0	4.18752E-05	0	8.37504E-05	8.37504E-05	0	0	0	0	2.66997E-09	2.66997E-09	0.00267
3966253768589	396625	3768589	0	0	5.47105E-05	0	4.55921E-05	0	9.11842E-05	9.11842E-05	0	0	0	0	2.90696E-09	2.90696E-09	0.002907
3968253768589	396825	3768589	0	0	8.00813E-05	0	6.67344E-05	0	0.000133469	0.000133469	0	0	0	0	4.255E-09	4.255E-09	0.004255
3968753768589	396875	3768589	0	0	8.92892E-05	0	7.44077E-05	0	0.000148815	0.000148815	0	0	0	0	4.74425E-09	4.74425E-09	0.0047443
3969253768589	396925	3768589	0	0	9.94723E-05	0	8.28936E-05	0	0.000165787	0.000165787	0	0	0	0	5.28531E-09	5.28531E-09	0.0052853
3969753768589	396975	3768589	0	0	0.000112687	0	9.39057E-05	0	0.000187811	0.000187811	0	0	0	0	5.98745E-09	5.98745E-09	0.0059875
3970253768589	397025	3768589	0	0	0.000127927	0	0.000106606	0	0.000213212	0.000213212	0	0	0	0	6.79724E-09	6.79724E-09	0.0067972
3970753768589	397075	3768589	0	0	0.000145081	0	0.000120901	0	0.000241801	0.000241801	0	0	0	0	7.70865E-09	7.70865E-09	0.0077087
3971253768589	397125	3768589	0	0	0.000167276	0	0.000139397	0	0.000278794	0.000278794	0	0	0	0	8.88799E-09	8.88799E-09	0.008888
3971753768589	397175	3768589	0	0	0.000192912	0	0.00016076	0	0.00032152	0.00032152	0	0	0	0	1.02501E-08	1.02501E-08	0.0102501
3972253768589	397225	3768589	0	0	0.000221821	0	0.000184851	0	0.000369701	0.000369701	0	0	0	0	1.17861E-08	1.17861E-08	0.0117861
3972753768589	397275	3768589	0	0	0.000254638	0	0.000212198	0	0.000424396	0.000424396	0	0	0	0	1.35298E-08	1.35298E-08	0.0135298
3973253768589	397325	3768589	0	0	0.000293722	0	0.000244769	0	0.000489537	0.000489537	0	0	0	0	1.56065E-08	1.56065E-08	0.0156065
3973753768589	397375	3768589	0	0	0.000327114	0	0.000272595	0	0.00054519	0.00054519	0	0	0	0	1.73807E-08	1.73807E-08	0.0173807
3974253768589	397425	3768589	0	0	0.000354586	0	0.000295489	0	0.000590977	0.000590977	0	0	0	0	1.88404E-08	1.88404E-08	0.0188404
3974753768589	397475	3768589	0	0	0.000373562	0	0.000311301	0	0.000622603	0.000622603	0	0	0	0	1.98487E-08	1.98487E-08	0.0198487
3975253768589	397525	3768589	0	0	0.000380131	0	0.000316776	0	0.000633552	0.000633552	0	0	0	0	2.01977E-08	2.01977E-08	0.0201977
3964253768639	396425	3768639	0	0	3.854E-05	0	3.21167E-05	0	6.42334E-05	6.42334E-05	0	0	0	0	2.04777E-09	2.04777E-09	0.0020478
3964753768639	396475	3768639	0	0	4.12465E-05	0	3.4372E-05	0	6.87441E-05	6.87441E-05	0	0	0	0	2.19157E-09	2.19157E-09	0.0021916
3965253768639	396525	3768639	0	0	4.45425E-05	0	3.71188E-05	0	7.42376E-05	7.42376E-05	0	0	0	0	2.3667E-09	2.3667E-09	0.0023667
3965753768639	396575	3768639	0	0	4.81259E-05	0	4.01049E-05	0	8.02098E-05	8.02098E-05	0	0	0	0	2.5571E-09	2.5571E-09	0.0025571
3966253768639	396625	3768639	0	0	5.2178E-05	0	4.34816E-05	0	8.69633E-05	8.69633E-05	0	0	0	0	2.7724E-09	2.7724E-09	0.0027724
3966753768639	396675	3768639	0	0	5.67895E-05	0	4.73246E-05	0	9.46491E-05	9.46491E-05	0	0	0	0	3.01743E-09	3.01743E-09	0.0030174
3967253768639	396725	3768639	0	0	6.20662E-05	0	5.17219E-05	0	0.000103444	0.000103444	0	0	0	0	3.2978E-09	3.2978E-09	0.0032978
3967753768639	396775	3768639	0	0	6.80536E-05	0	5.67113E-05	0	0.000113423	0.000113423	0	0	0	0	3.61593E-09	3.61593E-09	0.0036159
3968253768639	396825	3768639	0	0	7.50389E-05	0	6.25324E-05	0	0.000125065	0.000125065	0	0	0	0	3.98708E-09	3.98708E-09	0.0039871
3968753768639	396875	3768639	0	0	8.29843E-05	0	6.91536E-05	0	0.000138307	0.000138307	0	0	0	0	4.40925E-09	4.40925E-09	0.0044092
3969253768639	396925	3768639	0	0	9.21695E-05	0	7.68079E-05	0	0.000153616	0.000153616	0	0	0	0	4.89729E-09	4.89729E-09	0.0048973
3969753768639	396975	3768639	0	0	0.000103343	0	8.61191E-05	0	0.000172238	0.000172238	0	0	0	0	5.49098E-09	5.49098E-09	0.005491

Garvey Reservoir Rehab - Unmitigated Proposed Pump Station			Demolition - 2025	Demolition - 2026	Site Preparation - 203	Site Preparation - 202	Grading - 2034	Grading - 2026	Infrastructure - 203	Infrastructure - 203	Paving - 2025	Architectural Coating - 2	Child Risk				
Unique Identifier	X (UTM)	Y (UTM)	2025	1900	2034	1900	2034	1900	2034	2035	1900	1900	3rd Trimester	0<2	2<16	Total	per million
3970253768639	397025	3768639	0	0	0.000116096	0	9.6747E-05	0	0.000193494	0.000193494	0	0	0	0	6.16861E-09	6.16861E-09	0.0061686
3970753768639	397075	3768639	0	0	0.000130195	0	0.000108496	0	0.000216992	0.000216992	0	0	0	0	6.91774E-09	6.91774E-09	0.0069177
3971253768639	397125	3768639	0	0	0.000145459	0	0.000121216	0	0.000242431	0.000242431	0	0	0	0	7.72874E-09	7.72874E-09	0.0077287
3971753768639	397175	3768639	0	0	0.000167866	0	0.000139888	0	0.000279777	0.000279777	0	0	0	0	8.91932E-09	8.91932E-09	0.0089193
3972253768639	397225	3768639	0	0	0.000190999	0	0.000159166	0	0.000318332	0.000318332	0	0	0	0	1.01485E-08	1.01485E-08	0.0101485
3972753768639	397275	3768639	0	0	0.000217081	0	0.000180901	0	0.000361801	0.000361801	0	0	0	0	1.15343E-08	1.15343E-08	0.0115343
3973253768639	397325	3768639	0	0	0.000245241	0	0.000204367	0	0.000408735	0.000408735	0	0	0	0	1.30305E-08	1.30305E-08	0.0130305
3973753768639	397375	3768639	0	0	0.000270325	0	0.00022527	0	0.000450541	0.000450541	0	0	0	0	1.43633E-08	1.43633E-08	0.0143633
3974253768639	397425	3768639	0	0	0.000292634	0	0.000243861	0	0.000487723	0.000487723	0	0	0	0	1.55487E-08	1.55487E-08	0.0155487
3974753768639	397475	3768639	0	0	0.000307088	0	0.000255907	0	0.000511813	0.000511813	0	0	0	0	1.63167E-08	1.63167E-08	0.0163167
3975253768639	397525	3768639	0	0	0.000314073	0	0.000261728	0	0.000523455	0.000523455	0	0	0	0	1.66878E-08	1.66878E-08	0.0166878
3964253768689	396425	3768689	0	0	3.70507E-05	0	3.08756E-05	0	6.17512E-05	6.17512E-05	0	0	0	0	1.96864E-09	1.96864E-09	0.0019686
3964753768689	396475	3768689	0	0	3.97042E-05	0	3.30869E-05	0	6.61737E-05	6.61737E-05	0	0	0	0	2.10963E-09	2.10963E-09	0.0021096
3965253768689	396525	3768689	0	0	4.26072E-05	0	3.5506E-05	0	7.1012E-05	7.1012E-05	0	0	0	0	2.26387E-09	2.26387E-09	0.0022639
3965753768689	396575	3768689	0	0	4.59638E-05	0	3.83032E-05	0	7.66063E-05	7.66063E-05	0	0	0	0	2.44222E-09	2.44222E-09	0.0024422
3966253768689	396625	3768689	0	0	4.95925E-05	0	4.13271E-05	0	8.26542E-05	8.26542E-05	0	0	0	0	2.63503E-09	2.63503E-09	0.002635
3966753768689	396675	3768689	0	0	5.37731E-05	0	4.48109E-05	0	8.96218E-05	8.96218E-05	0	0	0	0	2.85715E-09	2.85715E-09	0.0028572
3967253768689	396725	3768689	0	0	5.8377E-05	0	4.86475E-05	0	9.72951E-05	9.72951E-05	0	0	0	0	3.10178E-09	3.10178E-09	0.0031018
3967753768689	396775	3768689	0	0	6.3684E-05	0	5.307E-05	0	0.00010614	0.00010614	0	0	0	0	3.38376E-09	3.38376E-09	0.0033838
3968253768689	396825	3768689	0	0	6.97773E-05	0	5.81477E-05	0	0.000116295	0.000116295	0	0	0	0	3.70751E-09	3.70751E-09	0.0037075
3968753768689	396875	3768689	0	0	7.69213E-05	0	6.41011E-05	0	0.000128202	0.000128202	0	0	0	0	4.0871E-09	4.0871E-09	0.0040871
3969253768689	396925	3768689	0	0	8.49725E-05	0	7.08104E-05	0	0.000141621	0.000141621	0	0	0	0	4.51489E-09	4.51489E-09	0.0045149
3969753768689	396975	3768689	0	0	9.43089E-05	0	7.85908E-05	0	0.000157182	0.000157182	0	0	0	0	5.01097E-09	5.01097E-09	0.005011
3970253768689	397025	3768689	0	0	0.000105165	0	8.76374E-05	0	0.000175275	0.000175275	0	0	0	0	5.58778E-09	5.58778E-09	0.0055878
3970753768689	397075	3768689	0	0	0.000117828	0	9.81896E-05	0	0.000196379	0.000196379	0	0	0	0	6.2606E-09	6.2606E-09	0.0062606
3971253768689	397125	3768689	0	0	0.000129817	0	0.000108181	0	0.000216362	0.000216362	0	0	0	0	6.89766E-09	6.89766E-09	0.0068977
3971753768689	397175	3768689	0	0	0.000147417	0	0.000122847	0	0.000245695	0.000245695	0	0	0	0	7.83277E-09	7.83277E-09	0.0078328
3972253768689	397225	3768689	0	0	0.000166588	0	0.000138824	0	0.000277647	0.000277647	0	0	0	0	8.85144E-09	8.85144E-09	0.0088514
3972753768689	397275	3768689	0	0	0.000186494	0	0.000155411	0	0.000310823	0.000310823	0	0	0	0	9.90906E-09	9.90906E-09	0.0099091
3973253768689	397325	3768689	0	0	0.000207601	0	0.000173	0	0.000346001	0.000346001	0	0	0	0	1.10306E-08	1.10306E-08	0.0110306
3973753768689	397375	3768689	0	0	0.000227831	0	0.000189859	0	0.000379718	0.000379718	0	0	0	0	1.21055E-08	1.21055E-08	0.0121055
3974253768689	397425	3768689	0	0	0.000244923	0	0.000204103	0	0.000408206	0.000408206	0	0	0	0	1.30137E-08	1.30137E-08	0.0130137
3974753768689	397475	3768689	0	0	0.000257609	0	0.000214674	0	0.000429348	0.000429348	0	0	0	0	1.36877E-08	1.36877E-08	0.0136877
3975253768689	397525	3768689	0	0	0.000264292	0	0.000220243	0	0.000440486	0.000440486	0	0	0	0	1.40428E-08	1.40428E-08	0.0140428

Garvey Reservoir Rehab - Unmitigated Proposed Pump Station

Offroad DPM Emissions, Ground Level Concentrations and Health Risk Calculations

Residential Receptors

Phase	Year	Emissions (lbs/day)	Meters	lbs/meter	meters (h1)	lbs/day (H1)	g/s (H1)	meters (h2)	lbs/day (H2)	g/s (H2)	hrs/day
Demolition - 2025	2025		1932.1	0	691.2	0	0	1240.9	0	0	10.00
Demolition - 2026	1900		1932.1	0	691.2	0	0	1240.9	0	0	10.00
Site Preparation - 2034	2034	0.0000	1932.1	0	691.2	0	0	1240.9	0	0	10.00
Site Preparation - 2026	1900		1932.1	0	691.2	0	0	1240.9	0	0	10.00
Grading - 2034	2034	0.0000	1932.1	0	691.2	0	0	1240.9	0	0	10.00
Grading - 2026	1900		1932.1	0	691.2	0	0	1240.9	0	0	10.00
Infrastructure - 2034	2034	0.0000	1932.1	0	691.2	0	0	1240.9	0	0	10.00
Infrastructure - 2035	2035	0.0000	1932.1	0	691.2	0	0	1240.9	0	0	10.00
Paving - 2025	1900		1932.1	0	691.2	0	0	1240.9	0	0	10.00
Architectural Coating - 2026	1900		1932.1	0	691.2	0	0	1240.9	0	0	10.00

		AERMOD Column Identifier:	*5*	*5*	*5*	*5*	*5*	*5*	*5*	*5*	*5*	*5*					
			6	*6*	*6*	*6*	*6*	*6*	*6*	*6*	*6*	*6*				*MAX:*	0
Garvey Reservoir Rehab - Unmitigated Proposed Pump Station			Demolition - 2025	Demolition - 2026	Site Preparation - 2034	te Preparation - 20	Grading - 2034	Grading - 2026	Infrastructure - 2034	nfrastructure - 203	Paving - 2025	rchitectural Coating - 202	Child Risk				
Unique Identifier	X (UTM)	Y (UTM)	2025	1900	2034	1900	2034	1900	2034	2035	1900	1900	3rd Trimester	0<2	2<16	Total	per million
396166.283767377.2	396166.28	3767377	0	0	0	0	0	0	0	0	0	0	0	0	0	0	0
396266.283767377.2	396266.28	3767377	0	0	0	0	0	0	0	0	0	0	0	0	0	0	0
396366.283767377.2	396366.28	3767377	0	0	0	0	0	0	0	0	0	0	0	0	0	0	0
396466.283767377.2	396466.28	3767377	0	0	0	0	0	0	0	0	0	0	0	0	0	0	0
396566.283767377.2	396566.28	3767377	0	0	0	0	0	0	0	0	0	0	0	0	0	0	0
396666.283767377.2	396666.28	3767377	0	0	0	0	0	0	0	0	0	0	0	0	0	0	0
396766.283767377.2	396766.28	3767377	0	0	0	0	0	0	0	0	0	0	0	0	0	0	0
396866.283767377.2	396866.28	3767377	0	0	0	0	0	0	0	0	0	0	0	0	0	0	0
396966.283767377.2	396966.28	3767377	0	0	0	0	0	0	0	0	0	0	0	0	0	0	0
397066.283767377.2	397066.28	3767377	0	0	0	0	0	0	0	0	0	0	0	0	0	0	0
397166.283767377.2	397166.28	3767377	0	0	0	0	0	0	0	0	0	0	0	0	0	0	0
397266.283767377.2	397266.28	3767377	0	0	0	0	0	0	0	0	0	0	0	0	0	0	0
397366.283767377.2	397366.28	3767377	0	0	0	0	0	0	0	0	0	0	0	0	0	0	0
397466.283767377.2	397466.28	3767377	0	0	0	0	0	0	0	0	0	0	0	0	0	0	0
397566.283767377.2	397566.28	3767377	0	0	0	0	0	0	0	0	0	0	0	0	0	0	0
397666.283767377.2	397666.28	3767377	0	0	0	0	0	0	0	0	0	0	0	0	0	0	0
397766.283767377.2	397766.28	3767377	0	0	0	0	0	0	0	0	0	0	0	0	0	0	0
397866.283767377.2	397866.28	3767377	0	0	0	0	0	0	0	0	0	0	0	0	0	0	0
396166.283767477.2	396166.28	3767477	0	0	0	0	0	0	0	0	0	0	0	0	0	0	0
396266.283767477.2	396266.28	3767477	0	0	0	0	0	0	0	0	0	0	0	0	0	0	0
396366.283767477.2	396366.28	3767477	0	0	0	0	0	0	0	0	0	0	0	0	0	0	0
396466.283767477.2	396466.28	3767477	0	0	0	0	0	0	0	0	0	0	0	0	0	0	0
396566.283767477.2	396566.28	3767477	0	0	0	0	0	0	0	0	0	0	0	0	0	0	0
396666.283767477.2	396666.28	3767477	0	0	0	0	0	0	0	0	0	0	0	0	0	0	0
396766.283767477.2	396766.28	3767477	0	0	0	0	0	0	0	0	0	0	0	0	0	0	0
396866.283767477.2	396866.28	3767477	0	0	0	0	0	0	0	0	0	0	0	0	0	0	0
396966.283767477.2	396966.28	3767477	0	0	0	0	0	0	0	0	0	0	0	0	0	0	0
397066.283767477.2	397066.28	3767477	0	0	0	0	0	0	0	0	0	0	0	0	0	0	0
397166.283767477.2	397166.28	3767477	0	0	0	0	0	0	0	0	0	0	0	0	0	0	0
397266.283767477.2	397266.28	3767477	0	0	0	0	0	0	0	0	0	0	0	0	0	0	0
397366.283767477.2	397366.28	3767477	0	0	0	0	0	0	0	0	0	0	0	0	0	0	0
397466.283767477.2	397466.28	3767477	0	0	0	0	0	0	0	0	0	0	0	0	0	0	0
397566.283767477.2	397566.28	3767477	0	0	0	0	0	0	0	0	0	0	0	0	0	0	0
397666.283767477.2	397666.28	3767477	0	0	0	0	0	0	0	0	0	0	0	0	0	0	0
397766.283767477.2	397766.28	3767477	0	0	0	0	0	0	0	0	0	0	0	0	0	0	0
397866.283767477.2	397866.28	3767477	0	0	0	0	0	0	0	0	0	0	0	0	0	0	0
396166.283767577.2	396166.28	3767577	0	0	0	0	0	0	0	0	0	0	0	0	0	0	0
396266.283767577.2	396266.28	3767577	0	0	0	0	0	0	0	0	0	0	0	0	0	0	0
396366.283767577.2	396366.28	3767577	0	0	0	0	0	0	0	0	0	0	0	0	0	0	0
396466.283767577.2	396466.28	3767577	0	0	0	0	0	0	0	0	0	0	0	0	0	0	0
396566.283767577.2	396566.28	3767577	0	0	0	0	0	0	0	0	0	0	0	0	0	0	0
396666.283767577.2	396666.28	3767577	0	0	0	0	0	0	0	0	0	0	0	0	0	0	0
396766.283767577.2	396766.28	3767577	0	0	0	0	0	0	0	0	0	0	0	0	0	0	0
396866.283767577.2	396866.28	3767577	0	0	0	0	0	0	0	0	0	0	0	0	0	0	0
396966.283767577.2	396966.28	3767577	0	0	0	0	0	0	0	0	0	0	0	0	0	0	0
397066.283767577.2	397066.28	3767577	0	0	0	0	0	0	0	0	0	0	0	0	0	0	0
397166.283767577.2	397166.28	3767577	0	0	0	0	0	0	0	0	0	0	0	0	0	0	0
397266.283767577.2	397266.28	3767577	0	0	0	0	0	0	0	0	0	0	0	0	0	0	0

Garvey Reservoir Rehab - Unmitigated Proposed Pump Station			Demolition - 2025	Demolition - 2026	Site Preparation - 2034	te Preparation - 20	Grading - 2034	Grading - 2026	Infrastructure - 2034	nfrastructure - 203	Paving - 2025	rchitectural Coating - 202	Child Risk				
Unique Identifier	X (UTM)	Y (UTM)	2025	1900	2034	1900	2034	1900	2034	2035	1900	1900	3rd Trimester	0<2	2<16	Total	per million
397366.283767577.2	397366.28	3767577	0	0	0	0	0	0	0	0	0	0	0	0	0	0	0
397466.283767577.2	397466.28	3767577	0	0	0	0	0	0	0	0	0	0	0	0	0	0	0
397566.283767577.2	397566.28	3767577	0	0	0	0	0	0	0	0	0	0	0	0	0	0	0
397666.283767577.2	397666.28	3767577	0	0	0	0	0	0	0	0	0	0	0	0	0	0	0
397766.283767577.2	397766.28	3767577	0	0	0	0	0	0	0	0	0	0	0	0	0	0	0
397866.283767577.2	397866.28	3767577	0	0	0	0	0	0	0	0	0	0	0	0	0	0	0
396166.283767677.2	396166.28	3767677	0	0	0	0	0	0	0	0	0	0	0	0	0	0	0
396266.283767677.2	396266.28	3767677	0	0	0	0	0	0	0	0	0	0	0	0	0	0	0
396366.283767677.2	396366.28	3767677	0	0	0	0	0	0	0	0	0	0	0	0	0	0	0
396466.283767677.2	396466.28	3767677	0	0	0	0	0	0	0	0	0	0	0	0	0	0	0
396566.283767677.2	396566.28	3767677	0	0	0	0	0	0	0	0	0	0	0	0	0	0	0
396666.283767677.2	396666.28	3767677	0	0	0	0	0	0	0	0	0	0	0	0	0	0	0
396766.283767677.2	396766.28	3767677	0	0	0	0	0	0	0	0	0	0	0	0	0	0	0
396866.283767677.2	396866.28	3767677	0	0	0	0	0	0	0	0	0	0	0	0	0	0	0
396966.283767677.2	396966.28	3767677	0	0	0	0	0	0	0	0	0	0	0	0	0	0	0
397066.283767677.2	397066.28	3767677	0	0	0	0	0	0	0	0	0	0	0	0	0	0	0
397166.283767677.2	397166.28	3767677	0	0	0	0	0	0	0	0	0	0	0	0	0	0	0
397266.283767677.2	397266.28	3767677	0	0	0	0	0	0	0	0	0	0	0	0	0	0	0
397366.283767677.2	397366.28	3767677	0	0	0	0	0	0	0	0	0	0	0	0	0	0	0
397466.283767677.2	397466.28	3767677	0	0	0	0	0	0	0	0	0	0	0	0	0	0	0
397566.283767677.2	397566.28	3767677	0	0	0	0	0	0	0	0	0	0	0	0	0	0	0
397666.283767677.2	397666.28	3767677	0	0	0	0	0	0	0	0	0	0	0	0	0	0	0
397766.283767677.2	397766.28	3767677	0	0	0	0	0	0	0	0	0	0	0	0	0	0	0
397866.283767677.2	397866.28	3767677	0	0	0	0	0	0	0	0	0	0	0	0	0	0	0
396166.283767777.2	396166.28	3767777	0	0	0	0	0	0	0	0	0	0	0	0	0	0	0
396266.283767777.2	396266.28	3767777	0	0	0	0	0	0	0	0	0	0	0	0	0	0	0
396366.283767777.2	396366.28	3767777	0	0	0	0	0	0	0	0	0	0	0	0	0	0	0
396466.283767777.2	396466.28	3767777	0	0	0	0	0	0	0	0	0	0	0	0	0	0	0
396566.283767777.2	396566.28	3767777	0	0	0	0	0	0	0	0	0	0	0	0	0	0	0
396666.283767777.2	396666.28	3767777	0	0	0	0	0	0	0	0	0	0	0	0	0	0	0
396766.283767777.2	396766.28	3767777	0	0	0	0	0	0	0	0	0	0	0	0	0	0	0
396866.283767777.2	396866.28	3767777	0	0	0	0	0	0	0	0	0	0	0	0	0	0	0
396966.283767777.2	396966.28	3767777	0	0	0	0	0	0	0	0	0	0	0	0	0	0	0
397066.283767777.2	397066.28	3767777	0	0	0	0	0	0	0	0	0	0	0	0	0	0	0
397166.283767777.2	397166.28	3767777	0	0	0	0	0	0	0	0	0	0	0	0	0	0	0
397266.283767777.2	397266.28	3767777	0	0	0	0	0	0	0	0	0	0	0	0	0	0	0
397366.283767777.2	397366.28	3767777	0	0	0	0	0	0	0	0	0	0	0	0	0	0	0
397466.283767777.2	397466.28	3767777	0	0	0	0	0	0	0	0	0	0	0	0	0	0	0
397566.283767777.2	397566.28	3767777	0	0	0	0	0	0	0	0	0	0	0	0	0	0	0
397666.283767777.2	397666.28	3767777	0	0	0	0	0	0	0	0	0	0	0	0	0	0	0
397766.283767777.2	397766.28	3767777	0	0	0	0	0	0	0	0	0	0	0	0	0	0	0
397866.283767777.2	397866.28	3767777	0	0	0	0	0	0	0	0	0	0	0	0	0	0	0
396166.283767877.2	396166.28	3767877	0	0	0	0	0	0	0	0	0	0	0	0	0	0	0
396266.283767877.2	396266.28	3767877	0	0	0	0	0	0	0	0	0	0	0	0	0	0	0
396366.283767877.2	396366.28	3767877	0	0	0	0	0	0	0	0	0	0	0	0	0	0	0
396466.283767877.2	396466.28	3767877	0	0	0	0	0	0	0	0	0	0	0	0	0	0	0
396566.283767877.2	396566.28	3767877	0	0	0	0	0	0	0	0	0	0	0	0	0	0	0
397466.283767877.2	397466.28	3767877	0	0	0	0	0	0	0	0	0	0	0	0	0	0	0
397566.283767877.2	397566.28	3767877	0	0	0	0	0	0	0	0	0	0	0	0	0	0	0
397666.283767877.2	397666.28	3767877	0	0	0	0	0	0	0	0	0	0	0	0	0	0	0
397766.283767877.2	397766.28	3767877	0	0	0	0	0	0	0	0	0	0	0	0	0	0	0
397866.283767877.2	397866.28	3767877	0	0	0	0	0	0	0	0	0	0	0	0	0	0	0
396166.283767977.2	396166.28	3767977	0	0	0	0	0	0	0	0	0	0	0	0	0	0	0
396266.283767977.2	396266.28	3767977	0	0	0	0	0	0	0	0	0	0	0	0	0	0	0
396366.283767977.2	396366.28	3767977	0	0	0	0	0	0	0	0	0	0	0	0	0	0	0
396466.283767977.2	396466.28	3767977	0	0	0	0	0	0	0	0	0	0	0	0	0	0	0
397466.283767977.2	397466.28	3767977	0	0	0	0	0	0	0	0	0	0	0	0	0	0	0
397566.283767977.2	397566.28	3767977	0	0	0	0	0	0	0	0	0	0	0	0	0	0	0
397666.283767977.2	397666.28	3767977	0	0	0	0	0	0	0	0	0	0	0	0	0	0	0
397766.283767977.2	397766.28	3767977	0	0	0	0	0	0	0	0	0	0	0	0	0	0	0
397866.283767977.2	397866.28	3767977	0	0	0	0	0	0	0	0	0	0	0	0	0	0	0
396166.283768077.2	396166.28	3768077	0	0	0	0	0	0	0	0	0	0	0	0	0	0	0
396266.283768077.2	396266.28	3768077	0	0	0	0	0	0	0	0	0	0	0	0	0	0	0
396366.283768077.2	396366.28	3768077	0	0	0	0	0	0	0	0	0	0	0	0	0	0	0
396466.283768077.2	396466.28	3768077	0	0	0	0	0	0	0	0	0	0	0	0	0	0	0
397466.283768077.2	397466.28	3768077	0	0	0	0	0	0	0	0	0	0	0	0	0	0	0
397566.283768077.2	397566.28	3768077	0	0	0	0	0	0	0	0	0	0	0	0	0	0	0
397666.283768077.2	397666.28	3768077	0	0	0	0	0	0	0	0	0	0	0	0	0	0	0
397766.283768077.2	397766.28	3768077	0	0	0	0	0	0	0	0	0	0	0	0	0	0	0
397866.283768077.2	397866.28	3768077	0	0	0	0	0	0	0	0	0	0	0	0	0	0	0
396166.283768177.2	396166.28	3768177	0	0	0	0	0	0	0	0	0	0	0	0	0	0	0
396266.283768177.2	396266.28	3768177	0	0	0	0	0	0	0	0	0	0	0	0	0	0	0
396366.283768177.2	396366.28	3768177	0	0	0	0	0	0	0	0	0	0	0	0	0	0	0
396466.283768177.2	396466.28	3768177	0	0	0	0	0	0	0	0	0	0	0	0	0	0	0
397466.283768177.2	397466.28	3768177	0	0	0	0	0	0	0	0	0	0	0	0	0	0	0

Garvey Reservoir Rehab - Unmitigated Proposed Pump Station			Demolition - 2025	Demolition - 2026	Site Preparation - 2034	te Preparation - 20	Grading - 2034	Grading - 2026	Infrastructure - 2034	nfrastructure - 203	Paving - 2025	rchitectural Coating - 202	Child Risk				
Unique Identifier	X (UTM)	Y (UTM)	2025	1900	2034	1900	2034	1900	2034	2035	1900	1900	3rd Trimester	0<2	2<16	Total	per million
397566.283768177.2	397566.28	3768177	0	0	0	0	0	0	0	0	0	0	0	0	0	0	0
397666.283768177.2	397666.28	3768177	0	0	0	0	0	0	0	0	0	0	0	0	0	0	0
397766.283768177.2	397766.28	3768177	0	0	0	0	0	0	0	0	0	0	0	0	0	0	0
397866.283768177.2	397866.28	3768177	0	0	0	0	0	0	0	0	0	0	0	0	0	0	0
396166.283768277.2	396166.28	3768277	0	0	0	0	0	0	0	0	0	0	0	0	0	0	0
396266.283768277.2	396266.28	3768277	0	0	0	0	0	0	0	0	0	0	0	0	0	0	0
396366.283768277.2	396366.28	3768277	0	0	0	0	0	0	0	0	0	0	0	0	0	0	0
396466.283768277.2	396466.28	3768277	0	0	0	0	0	0	0	0	0	0	0	0	0	0	0
397366.283768277.2	397366.28	3768277	0	0	0	0	0	0	0	0	0	0	0	0	0	0	0
397466.283768277.2	397466.28	3768277	0	0	0	0	0	0	0	0	0	0	0	0	0	0	0
397566.283768277.2	397566.28	3768277	0	0	0	0	0	0	0	0	0	0	0	0	0	0	0
397666.283768277.2	397666.28	3768277	0	0	0	0	0	0	0	0	0	0	0	0	0	0	0
397766.283768277.2	397766.28	3768277	0	0	0	0	0	0	0	0	0	0	0	0	0	0	0
397866.283768277.2	397866.28	3768277	0	0	0	0	0	0	0	0	0	0	0	0	0	0	0
396166.283768377.2	396166.28	3768377	0	0	0	0	0	0	0	0	0	0	0	0	0	0	0
396266.283768377.2	396266.28	3768377	0	0	0	0	0	0	0	0	0	0	0	0	0	0	0
396366.283768377.2	396366.28	3768377	0	0	0	0	0	0	0	0	0	0	0	0	0	0	0
396466.283768377.2	396466.28	3768377	0	0	0	0	0	0	0	0	0	0	0	0	0	0	0
397266.283768377.2	397266.28	3768377	0	0	0	0	0	0	0	0	0	0	0	0	0	0	0
397366.283768377.2	397366.28	3768377	0	0	0	0	0	0	0	0	0	0	0	0	0	0	0
397466.283768377.2	397466.28	3768377	0	0	0	0	0	0	0	0	0	0	0	0	0	0	0
397566.283768377.2	397566.28	3768377	0	0	0	0	0	0	0	0	0	0	0	0	0	0	0
397666.283768377.2	397666.28	3768377	0	0	0	0	0	0	0	0	0	0	0	0	0	0	0
397766.283768377.2	397766.28	3768377	0	0	0	0	0	0	0	0	0	0	0	0	0	0	0
397866.283768377.2	397866.28	3768377	0	0	0	0	0	0	0	0	0	0	0	0	0	0	0
396166.283768477.2	396166.28	3768477	0	0	0	0	0	0	0	0	0	0	0	0	0	0	0
396266.283768477.2	396266.28	3768477	0	0	0	0	0	0	0	0	0	0	0	0	0	0	0
396366.283768477.2	396366.28	3768477	0	0	0	0	0	0	0	0	0	0	0	0	0	0	0
396466.283768477.2	396466.28	3768477	0	0	0	0	0	0	0	0	0	0	0	0	0	0	0
397166.283768477.2	397166.28	3768477	0	0	0	0	0	0	0	0	0	0	0	0	0	0	0
397266.283768477.2	397266.28	3768477	0	0	0	0	0	0	0	0	0	0	0	0	0	0	0
397366.283768477.2	397366.28	3768477	0	0	0	0	0	0	0	0	0	0	0	0	0	0	0
397466.283768477.2	397466.28	3768477	0	0	0	0	0	0	0	0	0	0	0	0	0	0	0
397566.283768477.2	397566.28	3768477	0	0	0	0	0	0	0	0	0	0	0	0	0	0	0
397666.283768477.2	397666.28	3768477	0	0	0	0	0	0	0	0	0	0	0	0	0	0	0
397766.283768477.2	397766.28	3768477	0	0	0	0	0	0	0	0	0	0	0	0	0	0	0
397866.283768477.2	397866.28	3768477	0	0	0	0	0	0	0	0	0	0	0	0	0	0	0
396166.283768577.2	396166.28	3768577	0	0	0	0	0	0	0	0	0	0	0	0	0	0	0
396266.283768577.2	396266.28	3768577	0	0	0	0	0	0	0	0	0	0	0	0	0	0	0
396366.283768577.2	396366.28	3768577	0	0	0	0	0	0	0	0	0	0	0	0	0	0	0
396466.283768577.2	396466.28	3768577	0	0	0	0	0	0	0	0	0	0	0	0	0	0	0
396566.283768577.2	396566.28	3768577	0	0	0	0	0	0	0	0	0	0	0	0	0	0	0
396866.283768577.2	396866.28	3768577	0	0	0	0	0	0	0	0	0	0	0	0	0	0	0
396966.283768577.2	396966.28	3768577	0	0	0	0	0	0	0	0	0	0	0	0	0	0	0
397066.283768577.2	397066.28	3768577	0	0	0	0	0	0	0	0	0	0	0	0	0	0	0
397166.283768577.2	397166.28	3768577	0	0	0	0	0	0	0	0	0	0	0	0	0	0	0
397266.283768577.2	397266.28	3768577	0	0	0	0	0	0	0	0	0	0	0	0	0	0	0
397366.283768577.2	397366.28	3768577	0	0	0	0	0	0	0	0	0	0	0	0	0	0	0
397466.283768577.2	397466.28	3768577	0	0	0	0	0	0	0	0	0	0	0	0	0	0	0
397566.283768577.2	397566.28	3768577	0	0	0	0	0	0	0	0	0	0	0	0	0	0	0
397666.283768577.2	397666.28	3768577	0	0	0	0	0	0	0	0	0	0	0	0	0	0	0
397766.283768577.2	397766.28	3768577	0	0	0	0	0	0	0	0	0	0	0	0	0	0	0
397866.283768577.2	397866.28	3768577	0	0	0	0	0	0	0	0	0	0	0	0	0	0	0
396166.283768677.2	396166.28	3768677	0	0	0	0	0	0	0	0	0	0	0	0	0	0	0
396266.283768677.2	396266.28	3768677	0	0	0	0	0	0	0	0	0	0	0	0	0	0	0
396366.283768677.2	396366.28	3768677	0	0	0	0	0	0	0	0	0	0	0	0	0	0	0
396466.283768677.2	396466.28	3768677	0	0	0	0	0	0	0	0	0	0	0	0	0	0	0
396566.283768677.2	396566.28	3768677	0	0	0	0	0	0	0	0	0	0	0	0	0	0	0
396666.283768677.2	396666.28	3768677	0	0	0	0	0	0	0	0	0	0	0	0	0	0	0
396766.283768677.2	396766.28	3768677	0	0	0	0	0	0	0	0	0	0	0	0	0	0	0
396866.283768677.2	396866.28	3768677	0	0	0	0	0	0	0	0	0	0	0	0	0	0	0
396966.283768677.2	396966.28	3768677	0	0	0	0	0	0	0	0	0	0	0	0	0	0	0
397066.283768677.2	397066.28	3768677	0	0	0	0	0	0	0	0	0	0	0	0	0	0	0
397166.283768677.2	397166.28	3768677	0	0	0	0	0	0	0	0	0	0	0	0	0	0	0
397366.283768677.2	397366.28	3768677	0	0	0	0	0	0	0	0	0	0	0	0	0	0	0
397466.283768677.2	397466.28	3768677	0	0	0	0	0	0	0	0	0	0	0	0	0	0	0
397566.283768677.2	397566.28	3768677	0	0	0	0	0	0	0	0	0	0	0	0	0	0	0
397666.283768677.2	397666.28	3768677	0	0	0	0	0	0	0	0	0	0	0	0	0	0	0
397766.283768677.2	397766.28	3768677	0	0	0	0	0	0	0	0	0	0	0	0	0	0	0
397866.283768677.2	397866.28	3768677	0	0	0	0	0	0	0	0	0	0	0	0	0	0	0
396166.283768777.2	396166.28	3768777	0	0	0	0	0	0	0	0	0	0	0	0	0	0	0
396266.283768777.2	396266.28	3768777	0	0	0	0	0	0	0	0	0	0	0	0	0	0	0
396366.283768777.2	396366.28	3768777	0	0	0	0	0	0	0	0	0	0	0	0	0	0	0
396466.283768777.2	396466.28	3768777	0	0	0	0	0	0	0	0	0	0	0	0	0	0	0
396566.283768777.2	396566.28	3768777	0	0	0	0	0	0	0	0	0	0	0	0	0	0	0

Garvey Reservoir Rehab - Unmitigated Proposed Pump Station			Demolition - 2025	Demolition - 2026	Site Preparation - 2034	te Preparation - 20	Grading - 2034	Grading - 2026	Infrastructure - 2034	nfrastructure - 203	Paving - 2025	rchitectural Coating - 202	Child Risk				
Unique Identifier	X (UTM)	Y (UTM)	2025	1900	2034	1900	2034	1900	2034	2035	1900	1900	3rd Trimester	0<2	2<16	Total	per million
396666.283768777.2	396666.28	3768777	0	0	0	0	0	0	0	0	0	0	0	0	0	0	0
396766.283768777.2	396766.28	3768777	0	0	0	0	0	0	0	0	0	0	0	0	0	0	0
396866.283768777.2	396866.28	3768777	0	0	0	0	0	0	0	0	0	0	0	0	0	0	0
396966.283768777.2	396966.28	3768777	0	0	0	0	0	0	0	0	0	0	0	0	0	0	0
397066.283768777.2	397066.28	3768777	0	0	0	0	0	0	0	0	0	0	0	0	0	0	0
397166.283768777.2	397166.28	3768777	0	0	0	0	0	0	0	0	0	0	0	0	0	0	0
397266.283768777.2	397266.28	3768777	0	0	0	0	0	0	0	0	0	0	0	0	0	0	0
397366.283768777.2	397366.28	3768777	0	0	0	0	0	0	0	0	0	0	0	0	0	0	0
397466.283768777.2	397466.28	3768777	0	0	0	0	0	0	0	0	0	0	0	0	0	0	0
397566.283768777.2	397566.28	3768777	0	0	0	0	0	0	0	0	0	0	0	0	0	0	0
397666.283768777.2	397666.28	3768777	0	0	0	0	0	0	0	0	0	0	0	0	0	0	0
397766.283768777.2	397766.28	3768777	0	0	0	0	0	0	0	0	0	0	0	0	0	0	0
397866.283768777.2	397866.28	3768777	0	0	0	0	0	0	0	0	0	0	0	0	0	0	0
396166.283768877.2	396166.28	3768877	0	0	0	0	0	0	0	0	0	0	0	0	0	0	0
396266.283768877.2	396266.28	3768877	0	0	0	0	0	0	0	0	0	0	0	0	0	0	0
396366.283768877.2	396366.28	3768877	0	0	0	0	0	0	0	0	0	0	0	0	0	0	0
396466.283768877.2	396466.28	3768877	0	0	0	0	0	0	0	0	0	0	0	0	0	0	0
396566.283768877.2	396566.28	3768877	0	0	0	0	0	0	0	0	0	0	0	0	0	0	0
396666.283768877.2	396666.28	3768877	0	0	0	0	0	0	0	0	0	0	0	0	0	0	0
396766.283768877.2	396766.28	3768877	0	0	0	0	0	0	0	0	0	0	0	0	0	0	0
396866.283768877.2	396866.28	3768877	0	0	0	0	0	0	0	0	0	0	0	0	0	0	0
396966.283768877.2	396966.28	3768877	0	0	0	0	0	0	0	0	0	0	0	0	0	0	0
397066.283768877.2	397066.28	3768877	0	0	0	0	0	0	0	0	0	0	0	0	0	0	0
397166.283768877.2	397166.28	3768877	0	0	0	0	0	0	0	0	0	0	0	0	0	0	0
397266.283768877.2	397266.28	3768877	0	0	0	0	0	0	0	0	0	0	0	0	0	0	0
397366.283768877.2	397366.28	3768877	0	0	0	0	0	0	0	0	0	0	0	0	0	0	0
397466.283768877.2	397466.28	3768877	0	0	0	0	0	0	0	0	0	0	0	0	0	0	0
397566.283768877.2	397566.28	3768877	0	0	0	0	0	0	0	0	0	0	0	0	0	0	0
397666.283768877.2	397666.28	3768877	0	0	0	0	0	0	0	0	0	0	0	0	0	0	0
397766.283768877.2	397766.28	3768877	0	0	0	0	0	0	0	0	0	0	0	0	0	0	0
397866.283768877.2	397866.28	3768877	0	0	0	0	0	0	0	0	0	0	0	0	0	0	0
3964253767739	396425	3767739	0	0	0	0	0	0	0	0	0	0	0	0	0	0	0
3964753767739	396475	3767739	0	0	0	0	0	0	0	0	0	0	0	0	0	0	0
3965253767739	396525	3767739	0	0	0	0	0	0	0	0	0	0	0	0	0	0	0
3965753767739	396575	3767739	0	0	0	0	0	0	0	0	0	0	0	0	0	0	0
3966253767739	396625	3767739	0	0	0	0	0	0	0	0	0	0	0	0	0	0	0
3966753767739	396675	3767739	0	0	0	0	0	0	0	0	0	0	0	0	0	0	0
3967253767739	396725	3767739	0	0	0	0	0	0	0	0	0	0	0	0	0	0	0
3967753767739	396775	3767739	0	0	0	0	0	0	0	0	0	0	0	0	0	0	0
3968253767739	396825	3767739	0	0	0	0	0	0	0	0	0	0	0	0	0	0	0
3968753767739	396875	3767739	0	0	0	0	0	0	0	0	0	0	0	0	0	0	0
3969253767739	396925	3767739	0	0	0	0	0	0	0	0	0	0	0	0	0	0	0
3969753767739	396975	3767739	0	0	0	0	0	0	0	0	0	0	0	0	0	0	0
3970253767739	397025	3767739	0	0	0	0	0	0	0	0	0	0	0	0	0	0	0
3970753767739	397075	3767739	0	0	0	0	0	0	0	0	0	0	0	0	0	0	0
3971253767739	397125	3767739	0	0	0	0	0	0	0	0	0	0	0	0	0	0	0
3971753767739	397175	3767739	0	0	0	0	0	0	0	0	0	0	0	0	0	0	0
3972253767739	397225	3767739	0	0	0	0	0	0	0	0	0	0	0	0	0	0	0
3972753767739	397275	3767739	0	0	0	0	0	0	0	0	0	0	0	0	0	0	0
3973253767739	397325	3767739	0	0	0	0	0	0	0	0	0	0	0	0	0	0	0
3973753767739	397375	3767739	0	0	0	0	0	0	0	0	0	0	0	0	0	0	0
3974253767739	397425	3767739	0	0	0	0	0	0	0	0	0	0	0	0	0	0	0
3974753767739	397475	3767739	0	0	0	0	0	0	0	0	0	0	0	0	0	0	0
3975253767739	397525	3767739	0	0	0	0	0	0	0	0	0	0	0	0	0	0	0
3964253767789	396425	3767789	0	0	0	0	0	0	0	0	0	0	0	0	0	0	0
3964753767789	396475	3767789	0	0	0	0	0	0	0	0	0	0	0	0	0	0	0
3965253767789	396525	3767789	0	0	0	0	0	0	0	0	0	0	0	0	0	0	0
3965753767789	396575	3767789	0	0	0	0	0	0	0	0	0	0	0	0	0	0	0
3966253767789	396625	3767789	0	0	0	0	0	0	0	0	0	0	0	0	0	0	0
3966753767789	396675	3767789	0	0	0	0	0	0	0	0	0	0	0	0	0	0	0
3967253767789	396725	3767789	0	0	0	0	0	0	0	0	0	0	0	0	0	0	0
3967753767789	396775	3767789	0	0	0	0	0	0	0	0	0	0	0	0	0	0	0
3968253767789	396825	3767789	0	0	0	0	0	0	0	0	0	0	0	0	0	0	0
3968753767789	396875	3767789	0	0	0	0	0	0	0	0	0	0	0	0	0	0	0
3969253767789	396925	3767789	0	0	0	0	0	0	0	0	0	0	0	0	0	0	0
3969753767789	396975	3767789	0	0	0	0	0	0	0	0	0	0	0	0	0	0	0
3970253767789	397025	3767789	0	0	0	0	0	0	0	0	0	0	0	0	0	0	0
3970753767789	397075	3767789	0	0	0	0	0	0	0	0	0	0	0	0	0	0	0
3971253767789	397125	3767789	0	0	0	0	0	0	0	0	0	0	0	0	0	0	0
3971753767789	397175	3767789	0	0	0	0	0	0	0	0	0	0	0	0	0	0	0
3972253767789	397225	3767789	0	0	0	0	0	0	0	0	0	0	0	0	0	0	0
3972753767789	397275	3767789	0	0	0	0	0	0	0	0	0	0	0	0	0	0	0
3973253767789	397325	3767789	0	0	0	0	0	0	0	0	0	0	0	0	0	0	0
3973753767789	397375	3767789	0	0	0	0	0	0	0	0	0	0	0	0	0	0	0
3974253767789	397425	3767789	0	0	0	0	0	0	0	0	0	0	0	0	0	0	0

Garvey Reservoir Rehab - Unmitigated Proposed Pump Station			Demolition - 2025	Demolition - 2026	Site Preparation - 2034	te Preparation - 20	Grading - 2034	Grading - 2026	Infrastructure - 2034	nfrastructure - 203	Paving - 2025	rchitectural Coating - 202	Child Risk				
Unique Identifier	X (UTM)	Y (UTM)	2025	1900	2034	1900	2034	1900	2034	2035	1900	1900	3rd Trimester	0<2	2<16	Total	per million
3974753767789	397475	3767789	0	0	0	0	0	0	0	0	0	0	0	0	0	0	0
3975253767789	397525	3767789	0	0	0	0	0	0	0	0	0	0	0	0	0	0	0
3964253767839	396425	3767839	0	0	0	0	0	0	0	0	0	0	0	0	0	0	0
3964753767839	396475	3767839	0	0	0	0	0	0	0	0	0	0	0	0	0	0	0
3965253767839	396525	3767839	0	0	0	0	0	0	0	0	0	0	0	0	0	0	0
3965753767839	396575	3767839	0	0	0	0	0	0	0	0	0	0	0	0	0	0	0
3966253767839	396625	3767839	0	0	0	0	0	0	0	0	0	0	0	0	0	0	0
3966753767839	396675	3767839	0	0	0	0	0	0	0	0	0	0	0	0	0	0	0
3967253767839	396725	3767839	0	0	0	0	0	0	0	0	0	0	0	0	0	0	0
3967753767839	396775	3767839	0	0	0	0	0	0	0	0	0	0	0	0	0	0	0
3968253767839	396825	3767839	0	0	0	0	0	0	0	0	0	0	0	0	0	0	0
3968753767839	396875	3767839	0	0	0	0	0	0	0	0	0	0	0	0	0	0	0
3969253767839	396925	3767839	0	0	0	0	0	0	0	0	0	0	0	0	0	0	0
3969753767839	396975	3767839	0	0	0	0	0	0	0	0	0	0	0	0	0	0	0
3970253767839	397025	3767839	0	0	0	0	0	0	0	0	0	0	0	0	0	0	0
3970753767839	397075	3767839	0	0	0	0	0	0	0	0	0	0	0	0	0	0	0
3971253767839	397125	3767839	0	0	0	0	0	0	0	0	0	0	0	0	0	0	0
3971753767839	397175	3767839	0	0	0	0	0	0	0	0	0	0	0	0	0	0	0
3972253767839	397225	3767839	0	0	0	0	0	0	0	0	0	0	0	0	0	0	0
3972753767839	397275	3767839	0	0	0	0	0	0	0	0	0	0	0	0	0	0	0
3973253767839	397325	3767839	0	0	0	0	0	0	0	0	0	0	0	0	0	0	0
3973753767839	397375	3767839	0	0	0	0	0	0	0	0	0	0	0	0	0	0	0
3974753767839	397475	3767839	0	0	0	0	0	0	0	0	0	0	0	0	0	0	0
3975253767839	397525	3767839	0	0	0	0	0	0	0	0	0	0	0	0	0	0	0
3964253767889	396425	3767889	0	0	0	0	0	0	0	0	0	0	0	0	0	0	0
3964753767889	396475	3767889	0	0	0	0	0	0	0	0	0	0	0	0	0	0	0
3965253767889	396525	3767889	0	0	0	0	0	0	0	0	0	0	0	0	0	0	0
3965753767889	396575	3767889	0	0	0	0	0	0	0	0	0	0	0	0	0	0	0
3974753767889	397475	3767889	0	0	0	0	0	0	0	0	0	0	0	0	0	0	0
3975253767889	397525	3767889	0	0	0	0	0	0	0	0	0	0	0	0	0	0	0
3964253767939	396425	3767939	0	0	0	0	0	0	0	0	0	0	0	0	0	0	0
3964753767939	396475	3767939	0	0	0	0	0	0	0	0	0	0	0	0	0	0	0
3965253767939	396525	3767939	0	0	0	0	0	0	0	0	0	0	0	0	0	0	0
3974753767939	397475	3767939	0	0	0	0	0	0	0	0	0	0	0	0	0	0	0
3975253767939	397525	3767939	0	0	0	0	0	0	0	0	0	0	0	0	0	0	0
3964253767989	396425	3767989	0	0	0	0	0	0	0	0	0	0	0	0	0	0	0
3964753767989	396475	3767989	0	0	0	0	0	0	0	0	0	0	0	0	0	0	0
3974753767989	397475	3767989	0	0	0	0	0	0	0	0	0	0	0	0	0	0	0
3975253767989	397525	3767989	0	0	0	0	0	0	0	0	0	0	0	0	0	0	0
3964253768039	396425	3768039	0	0	0	0	0	0	0	0	0	0	0	0	0	0	0
3964753768039	396475	3768039	0	0	0	0	0	0	0	0	0	0	0	0	0	0	0
3974753768039	397475	3768039	0	0	0	0	0	0	0	0	0	0	0	0	0	0	0
3975253768039	397525	3768039	0	0	0	0	0	0	0	0	0	0	0	0	0	0	0
3964253768089	396425	3768089	0	0	0	0	0	0	0	0	0	0	0	0	0	0	0
3964753768089	396475	3768089	0	0	0	0	0	0	0	0	0	0	0	0	0	0	0
3974753768089	397475	3768089	0	0	0	0	0	0	0	0	0	0	0	0	0	0	0
3975253768089	397525	3768089	0	0	0	0	0	0	0	0	0	0	0	0	0	0	0
3964253768139	396425	3768139	0	0	0	0	0	0	0	0	0	0	0	0	0	0	0
3964753768139	396475	3768139	0	0	0	0	0	0	0	0	0	0	0	0	0	0	0
3974253768139	397425	3768139	0	0	0	0	0	0	0	0	0	0	0	0	0	0	0
3974753768139	397475	3768139	0	0	0	0	0	0	0	0	0	0	0	0	0	0	0
3975253768139	397525	3768139	0	0	0	0	0	0	0	0	0	0	0	0	0	0	0
3964253768189	396425	3768189	0	0	0	0	0	0	0	0	0	0	0	0	0	0	0
3964753768189	396475	3768189	0	0	0	0	0	0	0	0	0	0	0	0	0	0	0
3973753768189	397375	3768189	0	0	0	0	0	0	0	0	0	0	0	0	0	0	0
3974253768189	397425	3768189	0	0	0	0	0	0	0	0	0	0	0	0	0	0	0
3974753768189	397475	3768189	0	0	0	0	0	0	0	0	0	0	0	0	0	0	0
3975253768189	397525	3768189	0	0	0	0	0	0	0	0	0	0	0	0	0	0	0
3964253768239	396425	3768239	0	0	0	0	0	0	0	0	0	0	0	0	0	0	0
3964753768239	396475	3768239	0	0	0	0	0	0	0	0	0	0	0	0	0	0	0
3973753768239	397375	3768239	0	0	0	0	0	0	0	0	0	0	0	0	0	0	0
3974253768239	397425	3768239	0	0	0	0	0	0	0	0	0	0	0	0	0	0	0
3974753768239	397475	3768239	0	0	0	0	0	0	0	0	0	0	0	0	0	0	0
3975253768239	397525	3768239	0	0	0	0	0	0	0	0	0	0	0	0	0	0	0
3964253768289	396425	3768289	0	0	0	0	0	0	0	0	0	0	0	0	0	0	0
3964753768289	396475	3768289	0	0	0	0	0	0	0	0	0	0	0	0	0	0	0
3973253768289	397325	3768289	0	0	0	0	0	0	0	0	0	0	0	0	0	0	0
3973753768289	397375	3768289	0	0	0	0	0	0	0	0	0	0	0	0	0	0	0
3974253768289	397425	3768289	0	0	0	0	0	0	0	0	0	0	0	0	0	0	0
3974753768289	397475	3768289	0	0	0	0	0	0	0	0	0	0	0	0	0	0	0
3975253768289	397525	3768289	0	0	0	0	0	0	0	0	0	0	0	0	0	0	0
3964253768339	396425	3768339	0	0	0	0	0	0	0	0	0	0	0	0	0	0	0
3964753768339	396475	3768339	0	0	0	0	0	0	0	0	0	0	0	0	0	0	0
3965253768339	396525	3768339	0	0	0	0	0	0	0	0	0	0	0	0	0	0	0
3972753768339	397275	3768339	0	0	0	0	0	0	0	0	0	0	0	0	0	0	0

Garvey Reservoir Rehab - Unmitigated Proposed Pump Station			Demolition - 2025	Demolition - 2026	Site Preparation - 2034	te Preparation - 20	Grading - 2034	Grading - 2026	Infrastructure - 2034	nfrastructure - 203	Paving - 2025	rchitectural Coating - 202	Child Risk				
Unique Identifier	X (UTM)	Y (UTM)	2025	1900	2034	1900	2034	1900	2034	2035	1900	1900	3rd Trimester	0<2	2<16	Total	per million
3973253768339	397325	3768339	0	0	0	0	0	0	0	0	0	0	0	0	0	0	0
3973753768339	397375	3768339	0	0	0	0	0	0	0	0	0	0	0	0	0	0	0
3974253768339	397425	3768339	0	0	0	0	0	0	0	0	0	0	0	0	0	0	0
3974753768339	397475	3768339	0	0	0	0	0	0	0	0	0	0	0	0	0	0	0
3975253768339	397525	3768339	0	0	0	0	0	0	0	0	0	0	0	0	0	0	0
3964253768389	396425	3768389	0	0	0	0	0	0	0	0	0	0	0	0	0	0	0
3964753768389	396475	3768389	0	0	0	0	0	0	0	0	0	0	0	0	0	0	0
3965253768389	396525	3768389	0	0	0	0	0	0	0	0	0	0	0	0	0	0	0
3972253768389	397225	3768389	0	0	0	0	0	0	0	0	0	0	0	0	0	0	0
3972753768389	397275	3768389	0	0	0	0	0	0	0	0	0	0	0	0	0	0	0
3973253768389	397325	3768389	0	0	0	0	0	0	0	0	0	0	0	0	0	0	0
3973753768389	397375	3768389	0	0	0	0	0	0	0	0	0	0	0	0	0	0	0
3974253768389	397425	3768389	0	0	0	0	0	0	0	0	0	0	0	0	0	0	0
3974753768389	397475	3768389	0	0	0	0	0	0	0	0	0	0	0	0	0	0	0
3975253768389	397525	3768389	0	0	0	0	0	0	0	0	0	0	0	0	0	0	0
3964253768439	396425	3768439	0	0	0	0	0	0	0	0	0	0	0	0	0	0	0
3964753768439	396475	3768439	0	0	0	0	0	0	0	0	0	0	0	0	0	0	0
3965253768439	396525	3768439	0	0	0	0	0	0	0	0	0	0	0	0	0	0	0
3971753768439	397175	3768439	0	0	0	0	0	0	0	0	0	0	0	0	0	0	0
3972253768439	397225	3768439	0	0	0	0	0	0	0	0	0	0	0	0	0	0	0
3972753768439	397275	3768439	0	0	0	0	0	0	0	0	0	0	0	0	0	0	0
3973253768439	397325	3768439	0	0	0	0	0	0	0	0	0	0	0	0	0	0	0
3973753768439	397375	3768439	0	0	0	0	0	0	0	0	0	0	0	0	0	0	0
3974253768439	397425	3768439	0	0	0	0	0	0	0	0	0	0	0	0	0	0	0
3974753768439	397475	3768439	0	0	0	0	0	0	0	0	0	0	0	0	0	0	0
3975253768439	397525	3768439	0	0	0	0	0	0	0	0	0	0	0	0	0	0	0
3964253768489	396425	3768489	0	0	0	0	0	0	0	0	0	0	0	0	0	0	0
3964753768489	396475	3768489	0	0	0	0	0	0	0	0	0	0	0	0	0	0	0
3965253768489	396525	3768489	0	0	0	0	0	0	0	0	0	0	0	0	0	0	0
3970753768489	397075	3768489	0	0	0	0	0	0	0	0	0	0	0	0	0	0	0
3971253768489	397125	3768489	0	0	0	0	0	0	0	0	0	0	0	0	0	0	0
3971753768489	397175	3768489	0	0	0	0	0	0	0	0	0	0	0	0	0	0	0
3972253768489	397225	3768489	0	0	0	0	0	0	0	0	0	0	0	0	0	0	0
3972753768489	397275	3768489	0	0	0	0	0	0	0	0	0	0	0	0	0	0	0
3973253768489	397325	3768489	0	0	0	0	0	0	0	0	0	0	0	0	0	0	0
3973753768489	397375	3768489	0	0	0	0	0	0	0	0	0	0	0	0	0	0	0
3974253768489	397425	3768489	0	0	0	0	0	0	0	0	0	0	0	0	0	0	0
3974753768489	397475	3768489	0	0	0	0	0	0	0	0	0	0	0	0	0	0	0
3975253768489	397525	3768489	0	0	0	0	0	0	0	0	0	0	0	0	0	0	0
3964253768539	396425	3768539	0	0	0	0	0	0	0	0	0	0	0	0	0	0	0
3964753768539	396475	3768539	0	0	0	0	0	0	0	0	0	0	0	0	0	0	0
3965253768539	396525	3768539	0	0	0	0	0	0	0	0	0	0	0	0	0	0	0
3965753768539	396575	3768539	0	0	0	0	0	0	0	0	0	0	0	0	0	0	0
3970253768539	397025	3768539	0	0	0	0	0	0	0	0	0	0	0	0	0	0	0
3970753768539	397075	3768539	0	0	0	0	0	0	0	0	0	0	0	0	0	0	0
3971253768539	397125	3768539	0	0	0	0	0	0	0	0	0	0	0	0	0	0	0
3971753768539	397175	3768539	0	0	0	0	0	0	0	0	0	0	0	0	0	0	0
3972253768539	397225	3768539	0	0	0	0	0	0	0	0	0	0	0	0	0	0	0
3972753768539	397275	3768539	0	0	0	0	0	0	0	0	0	0	0	0	0	0	0
3973253768539	397325	3768539	0	0	0	0	0	0	0	0	0	0	0	0	0	0	0
3973753768539	397375	3768539	0	0	0	0	0	0	0	0	0	0	0	0	0	0	0
3974253768539	397425	3768539	0	0	0	0	0	0	0	0	0	0	0	0	0	0	0
3974753768539	397475	3768539	0	0	0	0	0	0	0	0	0	0	0	0	0	0	0
3975253768539	397525	3768539	0	0	0	0	0	0	0	0	0	0	0	0	0	0	0
3964253768589	396425	3768589	0	0	0	0	0	0	0	0	0	0	0	0	0	0	0
3964753768589	396475	3768589	0	0	0	0	0	0	0	0	0	0	0	0	0	0	0
3965253768589	396525	3768589	0	0	0	0	0	0	0	0	0	0	0	0	0	0	0
3965753768589	396575	3768589	0	0	0	0	0	0	0	0	0	0	0	0	0	0	0
3966253768589	396625	3768589	0	0	0	0	0	0	0	0	0	0	0	0	0	0	0
3968253768589	396825	3768589	0	0	0	0	0	0	0	0	0	0	0	0	0	0	0
3968753768589	396875	3768589	0	0	0	0	0	0	0	0	0	0	0	0	0	0	0
3969253768589	396925	3768589	0	0	0	0	0	0	0	0	0	0	0	0	0	0	0
3969753768589	396975	3768589	0	0	0	0	0	0	0	0	0	0	0	0	0	0	0
3970253768589	397025	3768589	0	0	0	0	0	0	0	0	0	0	0	0	0	0	0
3970753768589	397075	3768589	0	0	0	0	0	0	0	0	0	0	0	0	0	0	0
3971253768589	397125	3768589	0	0	0	0	0	0	0	0	0	0	0	0	0	0	0
3971753768589	397175	3768589	0	0	0	0	0	0	0	0	0	0	0	0	0	0	0
3972253768589	397225	3768589	0	0	0	0	0	0	0	0	0	0	0	0	0	0	0
3972753768589	397275	3768589	0	0	0	0	0	0	0	0	0	0	0	0	0	0	0
3973253768589	397325	3768589	0	0	0	0	0	0	0	0	0	0	0	0	0	0	0
3973753768589	397375	3768589	0	0	0	0	0	0	0	0	0	0	0	0	0	0	0
3974253768589	397425	3768589	0	0	0	0	0	0	0	0	0	0	0	0	0	0	0
3974753768589	397475	3768589	0	0	0	0	0	0	0	0	0	0	0	0	0	0	0
3975253768589	397525	3768589	0	0	0	0	0	0	0	0	0	0	0	0	0	0	0
3964253768639	396425	3768639	0	0	0	0	0	0	0	0	0	0	0	0	0	0	0

Garvey Reservoir Rehab - Unmitigated Proposed Pump Station			Demolition - 2025	Demolition - 2026	Site Preparation - 2034	te Preparation - 20	Grading - 2034	Grading - 2026	Infrastructure - 2034	nfrastructure - 203	Paving - 2025	rchitectural Coating - 202	Child Risk				
Unique Identifier	X (UTM)	Y (UTM)	2025	1900	2034	1900	2034	1900	2034	2035	1900	1900	3rd Trimester	0<2	2<16	Total	per million
3964753768639	396475	3768639	0	0	0	0	0	0	0	0	0	0	0	0	0	0	0
3965253768639	396525	3768639	0	0	0	0	0	0	0	0	0	0	0	0	0	0	0
3965753768639	396575	3768639	0	0	0	0	0	0	0	0	0	0	0	0	0	0	0
3966253768639	396625	3768639	0	0	0	0	0	0	0	0	0	0	0	0	0	0	0
3966753768639	396675	3768639	0	0	0	0	0	0	0	0	0	0	0	0	0	0	0
3967253768639	396725	3768639	0	0	0	0	0	0	0	0	0	0	0	0	0	0	0
3967753768639	396775	3768639	0	0	0	0	0	0	0	0	0	0	0	0	0	0	0
3968253768639	396825	3768639	0	0	0	0	0	0	0	0	0	0	0	0	0	0	0
3968753768639	396875	3768639	0	0	0	0	0	0	0	0	0	0	0	0	0	0	0
3969253768639	396925	3768639	0	0	0	0	0	0	0	0	0	0	0	0	0	0	0
3969753768639	396975	3768639	0	0	0	0	0	0	0	0	0	0	0	0	0	0	0
3970253768639	397025	3768639	0	0	0	0	0	0	0	0	0	0	0	0	0	0	0
3970753768639	397075	3768639	0	0	0	0	0	0	0	0	0	0	0	0	0	0	0
3971253768639	397125	3768639	0	0	0	0	0	0	0	0	0	0	0	0	0	0	0
3971753768639	397175	3768639	0	0	0	0	0	0	0	0	0	0	0	0	0	0	0
3972253768639	397225	3768639	0	0	0	0	0	0	0	0	0	0	0	0	0	0	0
3972753768639	397275	3768639	0	0	0	0	0	0	0	0	0	0	0	0	0	0	0
3973253768639	397325	3768639	0	0	0	0	0	0	0	0	0	0	0	0	0	0	0
3973753768639	397375	3768639	0	0	0	0	0	0	0	0	0	0	0	0	0	0	0
3974253768639	397425	3768639	0	0	0	0	0	0	0	0	0	0	0	0	0	0	0
3974753768639	397475	3768639	0	0	0	0	0	0	0	0	0	0	0	0	0	0	0
3975253768639	397525	3768639	0	0	0	0	0	0	0	0	0	0	0	0	0	0	0
3964253768689	396425	3768689	0	0	0	0	0	0	0	0	0	0	0	0	0	0	0
3964753768689	396475	3768689	0	0	0	0	0	0	0	0	0	0	0	0	0	0	0
3965253768689	396525	3768689	0	0	0	0	0	0	0	0	0	0	0	0	0	0	0
3965753768689	396575	3768689	0	0	0	0	0	0	0	0	0	0	0	0	0	0	0
3966253768689	396625	3768689	0	0	0	0	0	0	0	0	0	0	0	0	0	0	0
3966753768689	396675	3768689	0	0	0	0	0	0	0	0	0	0	0	0	0	0	0
3967253768689	396725	3768689	0	0	0	0	0	0	0	0	0	0	0	0	0	0	0
3967753768689	396775	3768689	0	0	0	0	0	0	0	0	0	0	0	0	0	0	0
3968253768689	396825	3768689	0	0	0	0	0	0	0	0	0	0	0	0	0	0	0
3968753768689	396875	3768689	0	0	0	0	0	0	0	0	0	0	0	0	0	0	0
3969253768689	396925	3768689	0	0	0	0	0	0	0	0	0	0	0	0	0	0	0
3969753768689	396975	3768689	0	0	0	0	0	0	0	0	0	0	0	0	0	0	0
3970253768689	397025	3768689	0	0	0	0	0	0	0	0	0	0	0	0	0	0	0
3970753768689	397075	3768689	0	0	0	0	0	0	0	0	0	0	0	0	0	0	0
3971253768689	397125	3768689	0	0	0	0	0	0	0	0	0	0	0	0	0	0	0
3971753768689	397175	3768689	0	0	0	0	0	0	0	0	0	0	0	0	0	0	0
3972253768689	397225	3768689	0	0	0	0	0	0	0	0	0	0	0	0	0	0	0
3972753768689	397275	3768689	0	0	0	0	0	0	0	0	0	0	0	0	0	0	0
3973253768689	397325	3768689	0	0	0	0	0	0	0	0	0	0	0	0	0	0	0
3973753768689	397375	3768689	0	0	0	0	0	0	0	0	0	0	0	0	0	0	0
3974253768689	397425	3768689	0	0	0	0	0	0	0	0	0	0	0	0	0	0	0
3974753768689	397475	3768689	0	0	0	0	0	0	0	0	0	0	0	0	0	0	0
3975253768689	397525	3768689	0	0	0	0	0	0	0	0	0	0	0	0	0	0	0

Garvey Reservoir Rehab - Unmitigated Proposed Pump Station

Maximum Individual Non-Cancer Impact Calculations - Sensitive Receptors (Maximum Impacted Senior Residential Receptor) (IMPACT AT ALL OTHER LOCATIONS ON THE PROJECT SITE WOULD BE LESS THAN SHOWN)

Maximum Non-cancer Chronic Hazards / Toxicological Endpoints*

Receptor Group	Pollutant	CREL[1]	CONC	WFrac	$CONC_{WF}$	HI		ALIM	BN	CVS	DEV	ENDC	EYE	HEM	IMMUN	KIDN	NS	REPRO	RESP	SK
Project:																				
MEI - Max	DPM	5.00E+00	7.39E-02	1.00E+00	7.39E-02	0.015		-	-	-	-	-	-	-	-	-	-	-	1.48E-02	-
							Total Risk				-			-				-	0.015	
							Threshold				1.00			1.00				1.00	1.00	
							Over?				NO			NO				NO	NO	

Notes:

1. California Air Resources Board, "Consolidated Table of OEHHA/ARB Approved Risk Assessment Health Values," "OEHHA/ARB Approved Chronic Reference Exposure Levels and Target Organs," "OEHHA/ARB Approved Acute Reference Exposure Levels and Target Organs," and "OEHHA/ARB Approved 8-Hour Reference Exposure Levels and Target Organs," http://www.arb.ca.gov/toxics/healthval/healthval.htm. Tables last updated: May 8, 2018. Downloaded: 08/14/18.

Source: ESA, 2020

Where:

$CONC_{WF}$	Pollutant Concentration ($\mu g/m^3$) multiplied by the weight fraction
CREL	Chronic Reference Exposure Level
HI	Hazard Index
MEI	Maximally Exposed Individual
WFrac	Weight fraction of speciated component

* Key to Toxicological Endpoints

ALIM	Alimentary Tract	EYE	Eye	NS	Nervous System
BN	Bone	HEM	Hematologic System	REPRO	Reproductive System
CVS	Cardiovascular System	IMMUN	Immune System	RESP	Respiratory System
DEV	Developmental System	KIDN	Kidney	SK	Skin
ENDC	Endocrine System				

Chronic HI

Garvey Reservoir Rehab - Mitigated Proposed Pump Station

Cancer Risk Summary & Maximum Annual GLC for Chronic Calculations

Cancer Risk Summary

323

Max Risk: 0.15131

XY	X	Y	Offroad Risk	Haul Risk	Total Risk
7449041451	574490	4145130	0.000202587	0	0.000203
7448041451	574480	4145140	0.000223978	0	0.000224
7449041451	574490	4145140	0.000256848	0	0.000257
7449041451	574490	4145150	0.000291777	0	0.000292
7450041451	574500	4145150	0.000336779	0	0.000337
7446041451	574460	4145160	0.000377773	0	0.000378
7449041451	574490	4145160	0.000417142	0	0.000417
7450041451	574500	4145160	0.000463064	0	0.000463
7451041451	574510	4145160	0.000521278	0	0.000521
7446041451	574460	4145170	0.000565576	0	0.000566
7447041451	574470	4145170	0.000583771	0	0.000584
7448041451	574480	4145170	0.000579114	0	0.000579
7449041451	574490	4145170	0.000585233	0	0.000585
7450041451	574500	4145170	0.000580522	0	0.000581
7451041451	574510	4145170	0.000552525	0	0.000553
7452041451	574520	4145170	0.000514726	0	0.000515
7446041451	574460	4145180	0.000457269	0	0.000457
7447041451	574470	4145180	0.000409236	0	0.000409
7448041451	574480	4145180	0.000212984	0	0.000213
7449041451	574490	4145180	0.00023405	0	0.000234
7450041451	574500	4145180	0.000272499	0	0.000272
7451041451	574510	4145180	0.000315442	0	0.000315
7452041451	574520	4145180	0.000365371	0	0.000365
7453041451	574530	4145180	0.000419741	0	0.00042
7445041451	574450	4145190	0.000481747	0	0.000482
7446041451	574460	4145190	0.000553933	0	0.000554
7447041451	574470	4145190	0.000646264	0	0.000646
7448041451	574480	4145190	0.000729064	0	0.000729
7449041451	574490	4145190	0.000778019	0	0.000778
7450041451	574500	4145190	0.000786954	0	0.000787
7451041451	574510	4145190	0.000785113	0	0.000785
7452041451	574520	4145190	0.000778289	0	0.000778
7444041452	574440	4145200	0.000733342	0	0.000733
7445041452	574450	4145200	0.000665001	0	0.000665
7446041452	574460	4145200	0.00058702	0	0.000587
7447041452	574470	4145200	0.000510177	0	0.00051
7448041452	574480	4145200	0.000218671	0	0.000219
7449041452	574490	4145200	0.000244772	0	0.000245
7450041452	574500	4145200	0.000282896	0	0.000283
7451041452	574510	4145200	0.000332717	0	0.000333
7443041452	574430	4145210	0.000395643	0	0.000396
7444041452	574440	4145210	0.000472486	0	0.000472
7445041452	574450	4145210	0.000544618	0	0.000545
7446041452	574460	4145210	0.000664838	0	0.000665
7447041452	574470	4145210	0.000802712	0	0.000803
7448041452	574480	4145210	0.000949522	0	0.00095
7449041452	574490	4145210	0.001075699	0	0.001076
7450041452	574500	4145210	0.001129743	0	0.00113
7451041452	574510	4145210	0.001128335	0	0.001128
7443041452	574430	4145220	0.001115122	0	0.001115
7444041452	574440	4145220	0.001024036	0	0.001024
7445041452	574450	4145220	0.000898564	0	0.000899
7446041452	574460	4145220	0.000761015	0	0.000761
7447041452	574470	4145220	0.000635108	0	0.000635
7448041452	574480	4145220	0.000225981	0	0.000226
7449041452	574490	4145220	0.000254737	0	0.000255
7450041452	574500	4145220	0.00029703	0	0.000297
7451041452	574510	4145220	0.000353458	0	0.000353
7452041452	574520	4145220	0.00042207	0	0.000422
7453041452	574530	4145220	0.000497722	0	0.000498
7444041452	574440	4145230	0.00062	0	0.00062
7445041452	574450	4145230	0.000800113	0	0.0008

Max GLC for Chronic Calcs

Max GLC: 0.014082

XY	X	Y	2025	2026	2027	2034	2035
57449041451	574490	4145130	0	0	0	1.885E-05	4.714E-06
57448041451	574480	4145140	0	0	0	2.084E-05	5.211E-06
57449041451	574490	4145140	0	0	0	2.39E-05	5.976E-06
57449041451	574490	4145150	0	0	0	2.715E-05	6.789E-06
57450041451	574500	4145150	0	0	0	3.134E-05	7.836E-06
57446041451	574460	4145160	0	0	0	3.516E-05	8.79E-06
57449041451	574490	4145160	0	0	0	3.882E-05	9.706E-06
57450041451	574500	4145160	0	0	0	4.31E-05	1.077E-05
57451041451	574510	4145160	0	0	0	4.851E-05	1.213E-05
57446041451	574460	4145170	0	0	0	5.264E-05	1.316E-05
57447041451	574470	4145170	0	0	0	5.433E-05	1.358E-05
57448041451	574480	4145170	0	0	0	5.39E-05	1.347E-05
57449041451	574490	4145170	0	0	0	5.447E-05	1.362E-05
57450041451	574500	4145170	0	0	0	5.403E-05	1.351E-05
57451041451	574510	4145170	0	0	0	5.142E-05	1.286E-05
57452041451	574520	4145170	0	0	0	4.79E-05	1.198E-05
57446041451	574460	4145180	0	0	0	4.256E-05	1.064E-05
57447041451	574470	4145180	0	0	0	3.809E-05	9.522E-06
57448041451	574480	4145180	0	0	0	1.982E-05	4.955E-06
57449041451	574490	4145180	0	0	0	2.178E-05	5.446E-06
57450041451	574500	4145180	0	0	0	2.536E-05	6.34E-06
57451041451	574510	4145180	0	0	0	2.936E-05	7.339E-06
57452041451	574520	4145180	0	0	0	3.4E-05	8.501E-06
57453041451	574530	4145180	0	0	0	3.906E-05	9.766E-06
57445041451	574450	4145190	0	0	0	4.483E-05	1.121E-05
57446041451	574460	4145190	0	0	0	5.155E-05	1.289E-05
57447041451	574470	4145190	0	0	0	6.015E-05	1.504E-05
57448041451	574480	4145190	0	0	0	6.785E-05	1.696E-05
57449041451	574490	4145190	0	0	0	7.241E-05	1.81E-05
57450041451	574500	4145190	0	0	0	7.324E-05	1.831E-05
57451041451	574510	4145190	0	0	0	7.307E-05	1.827E-05
57452041451	574520	4145190	0	0	0	7.243E-05	1.811E-05
57444041452	574440	4145200	0	0	0	6.825E-05	1.706E-05
57445041452	574450	4145200	0	0	0	6.189E-05	1.547E-05
57446041452	574460	4145200	0	0	0	5.463E-05	1.366E-05
57447041452	574470	4145200	0	0	0	4.748E-05	1.187E-05
57448041452	574480	4145200	0	0	0	2.035E-05	5.088E-06
57449041452	574490	4145200	0	0	0	2.278E-05	5.695E-06
57450041452	574500	4145200	0	0	0	2.633E-05	6.582E-06
57451041452	574510	4145200	0	0	0	3.097E-05	7.741E-06
57443041452	574430	4145210	0	0	0	3.682E-05	9.205E-06
57444041452	574440	4145210	0	0	0	4.397E-05	1.099E-05
57445041452	574450	4145210	0	0	0	5.069E-05	1.267E-05
57446041452	574460	4145210	0	0	0	6.187E-05	1.547E-05
57447041452	574470	4145210	0	0	0	7.471E-05	1.868E-05
57448041452	574480	4145210	0	0	0	8.837E-05	2.209E-05
57449041452	574490	4145210	0	0	0	0.0001001	2.503E-05
57450041452	574500	4145210	0	0	0	0.0001051	2.629E-05
57451041452	574510	4145210	0	0	0	0.000105	2.625E-05
57443041452	574430	4145220	0	0	0	0.0001038	2.595E-05
57444041452	574440	4145220	0	0	0	9.53E-05	2.383E-05
57445041452	574450	4145220	0	0	0	8.363E-05	2.091E-05
57446041452	574460	4145220	0	0	0	7.083E-05	1.771E-05
57447041452	574470	4145220	0	0	0	5.911E-05	1.478E-05
57448041452	574480	4145220	0	0	0	2.103E-05	5.258E-06
57449041452	574490	4145220	0	0	0	2.371E-05	5.927E-06
57450041452	574500	4145220	0	0	0	2.764E-05	6.911E-06
57451041452	574510	4145220	0	0	0	3.29E-05	8.224E-06
57452041452	574520	4145220	0	0	0	3.928E-05	9.82E-06
57453041452	574530	4145220	0	0	0	4.632E-05	1.158E-05
57444041452	574440	4145230	0	0	0	5.77E-05	1.443E-05
57445041452	574450	4145230	0	0	0	7.446E-05	1.862E-05

Garvey Reservoir Rehab - Mitigated Proposed Pump Station

Cancer Risk Summary & Maximum Annual GLC for Chronic Calculations

Cancer Risk Summary

323

Max Risk: 0.15131

XY	X	Y	Offroad Risk	Haul Risk	Total Risk
7446041452	574460	4145230	0.001033946	0	0.001034
7447041452	574470	4145230	0.001287925	0	0.001288
7448041452	574480	4145230	0.0015562	0	0.001556
7449041452	574490	4145230	0.001785322	0	0.001785
7450041452	574500	4145230	0.00179664	0	0.001797
7451041452	574510	4145230	0.001758299	0	0.001758
7452041452	574520	4145230	0.001538654	0	0.001539
7444041452	574440	4145240	0.001265993	0	0.001266
7445041452	574450	4145240	0.001007574	0	0.001008
7446041452	574460	4145240	0.000792044	0	0.000792
7447041452	574470	4145240	0.000230368	0	0.00023
7448041452	574480	4145240	0.000265784	0	0.000266
7449041452	574490	4145240	0.000308348	0	0.000308
7450041452	574500	4145240	0.000366021	0	0.000366
7451041452	574510	4145240	0.000435391	0	0.000435
7445041452	574450	4145250	0.000535467	0	0.000535
7446041452	574460	4145250	0.000696843	0	0.000697
7447041452	574470	4145250	0.000935171	0	0.000935
7448041452	574480	4145250	0.001281102	0	0.001281
7446041452	574460	4145260	0.001762577	0	0.001763
7447041452	574470	4145260	0.002376025	0	0.002376
7448041452	574480	4145260	0.003063174	0	0.003063
7447041452	574470	4145270	0.00332403	0	0.003324
7449041451	574490	4145130	0.003163249	0	0.003163
7448041451	574480	4145140	0.00254352	0	0.002544
7449041451	574490	4145140	0.001868718	0	0.001869
7449041451	574490	4145150	0.001356374	0	0.001356
7450041451	574500	4145150	0.000997447	0	0.000997
7446041451	574460	4145160	0.00023275	0	0.000233
7449041451	574490	4145160	0.000269574	0	0.00027
7450041451	574500	4145160	0.000315767	0	0.000316
7451041451	574510	4145160	0.00037344	0	0.000373
7446041451	574460	4145170	0.000449634	0	0.00045
7447041451	574470	4145170	0.006989333	0	0.006989
7448041451	574480	4145170	0.004715929	0	0.004716
7449041451	574490	4145170	0.002852572	0	0.002853
7450041451	574500	4145170	0.001812615	0	0.001813
7451041451	574510	4145170	0.001221316	0	0.001221
7452041451	574520	4145170	0.00023183	0	0.000232
7446041451	574460	4145180	0.000269737	0	0.00027
7447041451	574470	4145180	0.000316688	0	0.000317
7448041451	574480	4145180	0.000374523	0	0.000375
7449041451	574490	4145180	0.025028404	0	0.025028
7450041451	574500	4145180	0.008878033	0	0.008878
7451041451	574510	4145180	0.00403257	0	0.004033
7452041451	574520	4145180	0.00230947	0	0.002309
7453041451	574530	4145180	0.00140939	0	0.001409
7445041451	574450	4145190	0.000233725	0	0.000234
7446041451	574460	4145190	0.000267625	0	0.000268
7447041451	574470	4145190	0.000314034	0	0.000314
7448041451	574480	4145190	0.000375985	0	0.000376
7449041451	574490	4145190	0.130355076	0	0.130355
7450041451	574500	4145190	0.016166725	0	0.016167
7451041451	574510	4145190	0.005735958	0	0.005736
7452041451	574520	4145190	0.002871093	0	0.002871
7444041452	574440	4145200	0.001669326	0	0.001669
7445041452	574450	4145200	0.000231667	0	0.000232
7446041452	574460	4145200	0.000266163	0	0.000266
7447041452	574470	4145200	0.000311814	0	0.000312
7448041452	574480	4145200	0.000370029	0	0.00037
7449041452	574490	4145200	0.049642158	0	0.049642
7450041452	574500	4145200	0.016407057	0	0.016407

Max GLC for Chronic Calcs

Max GLC: 0.014082

XY	X	Y	2025	2026	2027	2034	2035
57446041452	574460	4145230	0	0	0	9.623E-05	2.406E-05
57447041452	574470	4145230	0	0	0	0.0001199	2.997E-05
57448041452	574480	4145230	0	0	0	0.0001448	3.621E-05
57449041452	574490	4145230	0	0	0	0.0001662	4.154E-05
57450041452	574500	4145230	0	0	0	0.0001672	4.18E-05
57451041452	574510	4145230	0	0	0	0.0001636	4.091E-05
57452041452	574520	4145230	0	0	0	0.0001432	3.58E-05
57444041452	574440	4145240	0	0	0	0.0001178	2.946E-05
57445041452	574450	4145240	0	0	0	9.377E-05	2.344E-05
57446041452	574460	4145240	0	0	0	7.371E-05	1.843E-05
57447041452	574470	4145240	0	0	0	2.144E-05	5.36E-06
57448041452	574480	4145240	0	0	0	2.474E-05	6.184E-06
57449041452	574490	4145240	0	0	0	2.87E-05	7.174E-06
57450041452	574500	4145240	0	0	0	3.406E-05	8.516E-06
57451041452	574510	4145240	0	0	0	4.052E-05	1.013E-05
57445041452	574450	4145250	0	0	0	4.983E-05	1.246E-05
57446041452	574460	4145250	0	0	0	6.485E-05	1.621E-05
57447041452	574470	4145250	0	0	0	8.703E-05	2.176E-05
57448041452	574480	4145250	0	0	0	0.0001192	2.981E-05
57446041452	574460	4145260	0	0	0	0.000164	4.101E-05
57447041452	574470	4145260	0	0	0	0.0002211	5.528E-05
57448041452	574480	4145260	0	0	0	0.0002851	7.127E-05
57447041452	574470	4145270	0	0	0	0.0003094	7.734E-05
57449041451	574490	4145130	0	0	0	0.0002944	7.36E-05
57448041451	574480	4145140	0	0	0	0.0002367	5.918E-05
57449041451	574490	4145140	0	0	0	0.0001739	4.348E-05
57449041451	574490	4145150	0	0	0	0.0001262	3.156E-05
57450041451	574500	4145150	0	0	0	9.283E-05	2.321E-05
57446041451	574460	4145160	0	0	0	2.166E-05	5.415E-06
57449041451	574490	4145160	0	0	0	2.509E-05	6.272E-06
57450041451	574500	4145160	0	0	0	2.939E-05	7.347E-06
57451041451	574510	4145160	0	0	0	3.476E-05	8.689E-06
57446041451	574460	4145170	0	0	0	4.185E-05	1.046E-05
57447041451	574470	4145170	0	0	0	0.0006505	0.0001626
57448041451	574480	4145170	0	0	0	0.0004389	0.0001097
57449041451	574490	4145170	0	0	0	0.0002655	6.637E-05
57450041451	574500	4145170	0	0	0	0.0001687	4.217E-05
57451041451	574510	4145170	0	0	0	0.0001137	2.842E-05
57452041451	574520	4145170	0	0	0	2.158E-05	5.394E-06
57446041451	574460	4145180	0	0	0	2.51E-05	6.276E-06
57447041451	574470	4145180	0	0	0	2.947E-05	7.368E-06
57448041451	574480	4145180	0	0	0	3.486E-05	8.714E-06
57449041451	574490	4145180	0	0	0	0.0023293	0.0005823
57450041451	574500	4145180	0	0	0	0.0008263	0.0002066
57451041451	574510	4145180	0	0	0	0.0003753	9.383E-05
57452041451	574520	4145180	0	0	0	0.0002149	5.373E-05
57453041451	574530	4145180	0	0	0	0.0001312	3.279E-05
57445041451	574450	4145190	0	0	0	2.175E-05	5.438E-06
57446041451	574460	4145190	0	0	0	2.491E-05	6.227E-06
57447041451	574470	4145190	0	0	0	2.923E-05	7.307E-06
57448041451	574480	4145190	0	0	0	3.499E-05	8.748E-06
57449041451	574490	4145190	0	0	0	0.0121318	0.0030329
57450041451	574500	4145190	0	0	0	0.0015046	0.0003761
57451041451	574510	4145190	0	0	0	0.0005338	0.0001335
57452041451	574520	4145190	0	0	0	0.0002672	6.68E-05
57444041452	574440	4145200	0	0	0	0.0001554	3.884E-05
57445041452	574450	4145200	0	0	0	2.156E-05	5.39E-06
57446041452	574460	4145200	0	0	0	2.477E-05	6.193E-06
57447041452	574470	4145200	0	0	0	2.902E-05	7.255E-06
57448041452	574480	4145200	0	0	0	3.444E-05	8.609E-06
57449041452	574490	4145200	0	0	0	0.0046201	0.001155
57450041452	574500	4145200	0	0	0	0.001527	0.0003817

Garvey Reservoir Rehab - Mitigated Proposed Pump Station

Cancer Risk Summary & Maximum Annual GLC for Chronic Calculations

Cancer Risk Summary

323

Max Risk: 0.15131

XY	X	Y	Offroad Risk	Haul Risk	Total Risk
7451041452(	574510	4145200	0.006472929	0	0.006473
7443041452:	574430	4145210	0.003352081	0	0.003352
7444041452:	574440	4145210	0.001881552	0	0.001882
7445041452:	574450	4145210	0.000227552	0	0.000228
7446041452:	574460	4145210	0.000259448	0	0.000259
7447041452:	574470	4145210	0.000303041	0	0.000303
7448041452:	574480	4145210	0.000358819	0	0.000359
7449041452:	574490	4145210	0.013964316	0	0.013964
7450041452:	574500	4145210	0.01639628	0	0.016396
7451041452:	574510	4145210	0.011123549	0	0.011124
7443041452:	574430	4145220	0.00584199	0	0.005842
7444041452:	574440	4145220	0.003293054	0	0.003293
7445041452:	574450	4145220	0.002082189	0	0.002082
7446041452:	574460	4145220	0.000219808	0	0.00022
7447041452:	574470	4145220	0.000251921	0	0.000252
7448041452:	574480	4145220	0.000292102	0	0.000292
7449041452:	574490	4145220	0.000343981	0	0.000344
7450041452:	574500	4145220	0.004223243	0	0.004223
7451041452:	574510	4145220	0.006528165	0	0.006528
7452041452:	574520	4145220	0.007876795	0	0.007877
7453041452:	574530	4145220	0.006879835	0	0.00688
7444041452:	574440	4145230	0.004791635	0	0.004792
7445041452:	574450	4145230	0.003104655	0	0.003105
7446041452:	574460	4145230	0.002127082	0	0.002127
7447041452:	574470	4145230	0.000211956	0	0.000212
7448041452:	574480	4145230	0.000242985	0	0.000243
7449041452:	574490	4145230	0.000279972	0	0.00028
7450041452:	574500	4145230	0.000325352	0	0.000325
7451041452:	574510	4145230	0.001836605	0	0.001837
7452041452:	574520	4145230	0.002727154	0	0.002727
7444041452(	574440	4145240	0.003755739	0	0.003756
7445041452(	574450	4145240	0.004440614	0	0.004441
7446041452(	574460	4145240	0.004213658	0	0.004214
7447041452(	574470	4145240	0.003382786	0	0.003383
7448041452(	574480	4145240	0.002605905	0	0.002606
7449041452(	574490	4145240	0.001881227	0	0.001881
7450041452(	574500	4145240	0.000203562	0	0.000204
7451041452(	574510	4145240	0.000222894	0	0.000223
7445041452!	574450	4145250	0.000261668	0	0.000262
7446041452!	574460	4145250	0.000305099	0	0.000305
7447041452!	574470	4145250	0.000358332	0	0.000358
7448041452!	574480	4145250	0.000637437	0	0.000637
7446041452(	574460	4145260	0.000805907	0	0.000806
7447041452(	574470	4145260	0.001039687	0	0.00104
7448041452(	574480	4145260	0.001390978	0	0.001391
7447041452:	574470	4145270	0.001856208	0	0.001856
7449041451:	574490	4145130	0.002412307	0	0.002412
7448041451(	574480	4145140	0.002791379	0	0.002791
7449041451(	574490	4145140	0.002819593	0	0.00282
7449041451!	574490	4145150	0.002486335	0	0.002486
7450041451!	574500	4145150	0.001995111	0	0.001995
7446041451(	574460	4145160	0.001571308	0	0.001571
7449041451(	574490	4145160	0.000193868	0	0.000194
7450041451(	574500	4145160	0.000218562	0	0.000219
7451041451(	574510	4145160	0.000246993	0	0.000247
7446041451:	574460	4145170	0.0002836	0	0.000284
7447041451:	574470	4145170	0.000328601	0	0.000329
7448041451:	574480	4145170	0.000384542	0	0.000385
7449041451:	574490	4145170	0.000455428	0	0.000455
7450041451:	574500	4145170	0.000550196	0	0.00055
7451041451:	574510	4145170	0.000676211	0	0.000676
7452041451:	574520	4145170	0.000846793	0	0.000847

Max GLC for Chronic Calcs

Max GLC: 0.014082

XY	X	Y	2025	2026	2027	2034	2035
57451041452(	574510	4145200	0	0	0	0.0006024	0.0001506
57443041452:	574430	4145210	0	0	0	0.000312	7.799E-05
57444041452:	574440	4145210	0	0	0	0.0001751	4.378E-05
57445041452:	574450	4145210	0	0	0	2.118E-05	5.294E-06
57446041452:	574460	4145210	0	0	0	2.415E-05	6.037E-06
57447041452:	574470	4145210	0	0	0	2.82E-05	7.051E-06
57448041452:	574480	4145210	0	0	0	3.339E-05	8.349E-06
57449041452:	574490	4145210	0	0	0	0.0012996	0.0003249
57450041452:	574500	4145210	0	0	0	0.001526	0.0003815
57451041452:	574510	4145210	0	0	0	0.0010352	0.0002588
57443041452:	574430	4145220	0	0	0	0.0005437	0.0001359
57444041452:	574440	4145220	0	0	0	0.0003065	7.662E-05
57445041452:	574450	4145220	0	0	0	0.0001938	4.845E-05
57446041452:	574460	4145220	0	0	0	2.046E-05	5.114E-06
57447041452:	574470	4145220	0	0	0	2.345E-05	5.861E-06
57448041452:	574480	4145220	0	0	0	2.719E-05	6.796E-06
57449041452:	574490	4145220	0	0	0	3.201E-05	8.003E-06
57450041452:	574500	4145220	0	0	0	0.000393	9.826E-05
57451041452:	574510	4145220	0	0	0	0.0006076	0.0001519
57452041452:	574520	4145220	0	0	0	0.0007331	0.0001833
57453041452:	574530	4145220	0	0	0	0.0006403	0.0001601
57444041452:	574440	4145230	0	0	0	0.0004459	0.0001115
57445041452:	574450	4145230	0	0	0	0.0002889	7.224E-05
57446041452:	574460	4145230	0	0	0	0.000198	4.949E-05
57447041452:	574470	4145230	0	0	0	1.973E-05	4.932E-06
57448041452:	574480	4145230	0	0	0	2.261E-05	5.653E-06
57449041452:	574490	4145230	0	0	0	2.606E-05	6.514E-06
57450041452:	574500	4145230	0	0	0	3.028E-05	7.57E-06
57451041452:	574510	4145230	0	0	0	0.0001709	4.273E-05
57452041452:	574520	4145230	0	0	0	0.0002538	6.345E-05
57444041452(	574440	4145240	0	0	0	0.0003495	8.738E-05
57445041452(	574450	4145240	0	0	0	0.0004133	0.0001033
57446041452(	574460	4145240	0	0	0	0.0003922	9.804E-05
57447041452(	574470	4145240	0	0	0	0.0003148	7.871E-05
57448041452(	574480	4145240	0	0	0	0.0002425	6.063E-05
57449041452(	574490	4145240	0	0	0	0.0001751	4.377E-05
57450041452(	574500	4145240	0	0	0	1.894E-05	4.736E-06
57451041452(	574510	4145240	0	0	0	2.074E-05	5.186E-06
57445041452!	574450	4145250	0	0	0	2.435E-05	6.088E-06
57446041452!	574460	4145250	0	0	0	2.839E-05	7.099E-06
57447041452!	574470	4145250	0	0	0	3.335E-05	8.337E-06
57448041452!	574480	4145250	0	0	0	5.932E-05	1.483E-05
57446041452(	574460	4145260	0	0	0	7.5E-05	1.875E-05
57447041452(	574470	4145260	0	0	0	9.676E-05	2.419E-05
57448041452(	574480	4145260	0	0	0	0.0001295	3.236E-05
57447041452:	574470	4145270	0	0	0	0.0001728	4.319E-05
57449041451:	574490	4145130	0	0	0	0.0002245	5.613E-05
57448041451(	574480	4145140	0	0	0	0.0002598	6.495E-05
57449041451(	574490	4145140	0	0	0	0.0002624	6.56E-05
57449041451!	574490	4145150	0	0	0	0.0002314	5.785E-05
57450041451!	574500	4145150	0	0	0	0.0001857	4.642E-05
57446041451(	574460	4145160	0	0	0	0.0001462	3.656E-05
57449041451(	574490	4145160	0	0	0	1.804E-05	4.511E-06
57450041451(	574500	4145160	0	0	0	2.034E-05	5.085E-06
57451041451(	574510	4145160	0	0	0	2.299E-05	5.747E-06
57446041451:	574460	4145170	0	0	0	2.639E-05	6.598E-06
57447041451:	574470	4145170	0	0	0	3.058E-05	7.646E-06
57448041451:	574480	4145170	0	0	0	3.579E-05	8.947E-06
57449041451:	574490	4145170	0	0	0	4.239E-05	1.06E-05
57450041451:	574500	4145170	0	0	0	5.121E-05	1.28E-05
57451041451:	574510	4145170	0	0	0	6.293E-05	1.573E-05
57452041451:	574520	4145170	0	0	0	7.881E-05	1.97E-05

Garvey Reservoir Rehab - Mitigated Proposed Pump Station

Cancer Risk Summary & Maximum Annual GLC for Chronic Calculations

Cancer Risk Summary

323

Max Risk: 0.15131

XY	X	Y	Offroad Risk	Haul Risk	Total Risk
7446041451	574460	4145180	0.001064868	0	0.001065
7447041451	574470	4145180	0.001670084	0	0.00167
7448041451	574480	4145180	0.001907654	0	0.001908
7449041451	574490	4145180	0.001971284	0	0.001971
7450041451	574500	4145180	0.001841749	0	0.001842
7451041451	574510	4145180	0.00157602	0	0.001576
7452041451	574520	4145180	0.001307474	0	0.001307
7453041451	574530	4145180	0.00018515	0	0.000185
7445041451	574450	4145190	0.000206107	0	0.000206
7446041451	574460	4145190	0.000233075	0	0.000233
7447041451	574470	4145190	0.000263401	0	0.000263
7448041451	574480	4145190	0.000299305	0	0.000299
7449041451	574490	4145190	0.000345389	0	0.000345
7450041451	574500	4145190	0.000404253	0	0.000404
7451041451	574510	4145190	0.000479418	0	0.000479
7452041451	574520	4145190	0.000574457	0	0.000574
7444041452	574440	4145200	0.000695327	0	0.000695
7445041452	574450	4145200	0.000840186	0	0.00084
7446041452	574460	4145200	0.001026528	0	0.001027
7447041452	574470	4145200	0.001213302	0	0.001213
7448041452	574480	4145200	0.001356158	0	0.001356
7449041452	574490	4145200	0.001414643	0	0.001415
7450041452	574500	4145200	0.001369425	0	0.001369
7451041452	574510	4145200	0.001238483	0	0.001238
7443041452	574430	4145210	0.001076836	0	0.001077
7444041452	574440	4145210	0.000174644	0	0.000175
7445041452	574450	4145210	0.000194464	0	0.000194
7446041452	574460	4145210	0.000215855	0	0.000216
7447041452	574470	4145210	0.000244502	0	0.000245
7448041452	574480	4145210	0.00027564	0	0.000276
7449041452	574490	4145210	0.000312897	0	0.000313
7450041452	574500	4145210	0.000361851	0	0.000362
7451041452	574510	4145210	0.000427864	0	0.000428
7443041452	574430	4145220	0.0005007	0	0.000501
7444041452	574440	4145220	0.000583121	0	0.000583
7445041452	574450	4145220	0.000683846	0	0.000684
7446041452	574460	4145220	0.000805637	0	0.000806
7447041452	574470	4145220	0.000921308	0	0.000921
7448041452	574480	4145220	0.001019109	0	0.001019
7449041452	574490	4145220	0.001070013	0	0.00107
7450041452	574500	4145220	0.001050517	0	0.001051
7451041452	574510	4145220	0.000982988	0	0.000983
7452041452	574520	4145220	0.000889195	0	0.000889
7453041452	574530	4145220	0.000337591	0	0.000338
7444041452	574440	4145230	0.000368458	0	0.000368
7445041452	574450	4145230	0.000400084	0	0.0004
7446041452	574460	4145230	0.00044124	0	0.000441
7447041452	574470	4145230	0.000477414	0	0.000477
7448041452	574480	4145230	0.000530376	0	0.00053
7449041452	574490	4145230	0.000607707	0	0.000608
7450041452	574500	4145230	0.000679947	0	0.00068
7451041452	574510	4145230	0.000784409	0	0.000784
7452041452	574520	4145230	0.000910206	0	0.00091
7444041452	574440	4145240	0.001050247	0	0.00105
7445041452	574450	4145240	0.001214168	0	0.001214
7446041452	574460	4145240	0.001399643	0	0.0014
7447041452	574470	4145240	0.001600226	0	0.0016
7448041452	574480	4145240	0.001816081	0	0.001816
7449041452	574490	4145240	0.002048181	0	0.002048
7450041452	574500	4145240	0.002268151	0	0.002268
7451041452	574510	4145240	0.002480269	0	0.00248
7445041452	574450	4145250	0.002563719	0	0.002564

Max GLC for Chronic Calcs

Max GLC: 0.014082

XY	X	Y	2025	2026	2027	2034	2035
574460414518	574460	4145180	0	0	0	9.91E-05	2.478E-05
574470414518	574470	4145180	0	0	0	0.0001554	3.886E-05
574480414518	574480	4145180	0	0	0	0.0001775	4.439E-05
574490414518	574490	4145180	0	0	0	0.0001835	4.587E-05
574500414518	574500	4145180	0	0	0	0.0001714	4.285E-05
574510414518	574510	4145180	0	0	0	0.0001467	3.667E-05
574520414518	574520	4145180	0	0	0	0.0001217	3.042E-05
574530414518	574530	4145180	0	0	0	1.723E-05	4.308E-06
574450414519	574450	4145190	0	0	0	1.918E-05	4.795E-06
574460414519	574460	4145190	0	0	0	2.169E-05	5.423E-06
574470414519	574470	4145190	0	0	0	2.451E-05	6.129E-06
574480414519	574480	4145190	0	0	0	2.786E-05	6.964E-06
574490414519	574490	4145190	0	0	0	3.214E-05	8.036E-06
574500414519	574500	4145190	0	0	0	3.762E-05	9.406E-06
574510414519	574510	4145190	0	0	0	4.462E-05	1.115E-05
574520414519	574520	4145190	0	0	0	5.346E-05	1.337E-05
574440414520	574440	4145200	0	0	0	6.471E-05	1.618E-05
574450414520	574450	4145200	0	0	0	7.819E-05	1.955E-05
574460414520	574460	4145200	0	0	0	9.554E-05	2.388E-05
574470414520	574470	4145200	0	0	0	0.0001129	2.823E-05
574480414520	574480	4145200	0	0	0	0.0001262	3.155E-05
574490414520	574490	4145200	0	0	0	0.0001317	3.291E-05
574500414520	574500	4145200	0	0	0	0.0001274	3.186E-05
574510414520	574510	4145200	0	0	0	0.0001153	2.882E-05
574430414521	574430	4145210	0	0	0	0.0001002	2.505E-05
574440414521	574440	4145210	0	0	0	1.625E-05	4.063E-06
574450414521	574450	4145210	0	0	0	1.81E-05	4.525E-06
574460414521	574460	4145210	0	0	0	2.009E-05	5.022E-06
574470414521	574470	4145210	0	0	0	2.276E-05	5.689E-06
574480414521	574480	4145210	0	0	0	2.565E-05	6.413E-06
574490414521	574490	4145210	0	0	0	2.912E-05	7.28E-06
574500414521	574500	4145210	0	0	0	3.368E-05	8.419E-06
574510414521	574510	4145210	0	0	0	3.982E-05	9.955E-06
574430414522	574430	4145220	0	0	0	4.66E-05	1.165E-05
574440414522	574440	4145220	0	0	0	5.427E-05	1.357E-05
574450414522	574450	4145220	0	0	0	6.364E-05	1.591E-05
574460414522	574460	4145220	0	0	0	7.498E-05	1.874E-05
574470414522	574470	4145220	0	0	0	8.574E-05	2.144E-05
574480414522	574480	4145220	0	0	0	9.485E-05	2.371E-05
574490414522	574490	4145220	0	0	0	9.958E-05	2.49E-05
574500414522	574500	4145220	0	0	0	9.777E-05	2.444E-05
574510414522	574510	4145220	0	0	0	9.148E-05	2.287E-05
574520414522	574520	4145220	0	0	0	8.275E-05	2.069E-05
574530414522	574530	4145220	0	0	0	3.142E-05	7.855E-06
574440414523	574440	4145230	0	0	0	3.429E-05	8.573E-06
574450414523	574450	4145230	0	0	0	3.723E-05	9.309E-06
574460414523	574460	4145230	0	0	0	4.107E-05	1.027E-05
574470414523	574470	4145230	0	0	0	4.443E-05	1.111E-05
574480414523	574480	4145230	0	0	0	4.936E-05	1.234E-05
574490414523	574490	4145230	0	0	0	5.656E-05	1.414E-05
574500414523	574500	4145230	0	0	0	6.328E-05	1.582E-05
574510414523	574510	4145230	0	0	0	7.3E-05	1.825E-05
574520414523	574520	4145230	0	0	0	8.471E-05	2.118E-05
574440414524	574440	4145240	0	0	0	9.774E-05	2.444E-05
574450414524	574450	4145240	0	0	0	0.000113	2.825E-05
574460414524	574460	4145240	0	0	0	0.0001303	3.257E-05
574470414524	574470	4145240	0	0	0	0.0001489	3.723E-05
574480414524	574480	4145240	0	0	0	0.000169	4.225E-05
574490414524	574490	4145240	0	0	0	0.0001906	4.765E-05
574500414524	574500	4145240	0	0	0	0.0002111	5.277E-05
574510414524	574510	4145240	0	0	0	0.0002308	5.771E-05
574450414525	574450	4145250	0	0	0	0.0002386	5.965E-05

Garvey Reservoir Rehab - Mitigated Proposed Pump Station

Cancer Risk Summary & Maximum Annual GLC for Chronic Calculations

Cancer Risk Summary

323

Max Risk: 0.15131

XY	X	Y	Offroad Risk	Haul Risk	Total Risk
7446041452	574460	4145250	0.002557763	0	0.002558
7447041452	574470	4145250	0.002501227	0	0.002501
7448041452	574480	4145250	0.00244599	0	0.002446
7446041452	574460	4145260	0.0022564	0	0.002256
7447041452	574470	4145260	0.000342681	0	0.000343
7448041452	574480	4145260	0.000372736	0	0.000373
7447041452	574470	4145270	0.000405499	0	0.000405
7449041451	574490	4145130	0.00044319	0	0.000443
7448041451	574480	4145140	0.000491115	0	0.000491
7449041451	574490	4145140	0.000551875	0	0.000552
7449041451	574490	4145150	0.000633971	0	0.000634
7450041451	574500	4145150	0.000721374	0	0.000721
7446041451	574460	4145160	0.000836179	0	0.000836
7449041451	574490	4145160	0.000974216	0	0.000974
7450041451	574500	4145160	0.001140466	0	0.00114
7451041451	574510	4145160	0.001348522	0	0.001349
7446041451	574460	4145170	0.00159454	0	0.001595
7447041451	574470	4145170	0.001878844	0	0.001879
7448041451	574480	4145170	0.002202409	0	0.002202
7449041451	574490	4145170	0.00256621	0	0.002566
7450041451	574500	4145170	0.002939705	0	0.00294
7451041451	574510	4145170	0.00333968	0	0.00334
7452041451	574520	4145170	0.003579958	0	0.00358
7446041451	574460	4145180	0.003607847	0	0.003608
7447041451	574470	4145180	0.003498511	0	0.003499
7448041451	574480	4145180	0.003381432	0	0.003381
7449041451	574490	4145180	0.003036206	0	0.003036
7450041451	574500	4145180	0.000346797	0	0.000347
7451041451	574510	4145180	0.000378856	0	0.000379
7452041451	574520	4145180	0.000409452	0	0.000409
7453041451	574530	4145180	0.000451908	0	0.000452
7445041451	574450	4145190	0.0005033	0	0.000503
7446041451	574460	4145190	0.000578627	0	0.000579
7447041451	574470	4145190	0.000659586	0	0.00066
7448041451	574480	4145190	0.000757061	0	0.000757
7449041451	574490	4145190	0.000879502	0	0.00088
7450041451	574500	4145190	0.001033351	0	0.001033
7451041451	574510	4145190	0.001226299	0	0.001226
7452041451	574520	4145190	0.00147719	0	0.001477
7444041452	574440	4145200	0.001793066	0	0.001793
7445041452	574450	4145200	0.002174142	0	0.002174
7446041452	574460	4145200	0.002636231	0	0.002636
7447041452	574470	4145200	0.003248865	0	0.003249
7448041452	574480	4145200	0.003981395	0	0.003981
7449041452	574490	4145200	0.004708456	0	0.004708
7450041452	574500	4145200	0.005287353	0	0.005287
7451041452	574510	4145200	0.005479597	0	0.00548
7443041452	574430	4145210	0.004826239	0	0.004826
7444041452	574440	4145210	0.004270194	0	0.00427
7445041452	574450	4145210	0.00034945	0	0.000349
7446041452	574460	4145210	0.000377014	0	0.000377
7447041452	574470	4145210	0.00041438	0	0.000414
7448041452	574480	4145210	0.000461981	0	0.000462
7449041452	574490	4145210	0.00780997	0	0.00781
7450041452	574500	4145210	0.006317238	0	0.006317
7451041452	574510	4145210	0.000351075	0	0.000351
7443041452	574430	4145220	0.000379343	0	0.000379
7444041452	574440	4145220	0.000418821	0	0.000419
7445041452	574450	4145220	0.013853518	0	0.013854
7446041452	574460	4145220	0.009796904	0	0.009797
7447041452	574470	4145220	0.000348476	0	0.000348
7448041452	574480	4145220	0.000381022	0	0.000381

Max GLC for Chronic Calcs

Max GLC: 0.014082

XY	X	Y	2025	2026	2027	2034	2035
57446041452	574460	4145250	0	0	0	0.000238	5.951E-05
57447041452	574470	4145250	0	0	0	0.0002328	5.82E-05
57448041452	574480	4145250	0	0	0	0.0002276	5.691E-05
57446041452	574460	4145260	0	0	0	0.00021	5.25E-05
57447041452	574470	4145260	0	0	0	3.189E-05	7.973E-06
57448041452	574480	4145260	0	0	0	3.469E-05	8.672E-06
57447041452	574470	4145270	0	0	0	3.774E-05	9.435E-06
57449041451	574490	4145130	0	0	0	4.125E-05	1.031E-05
57448041451	574480	4145140	0	0	0	4.571E-05	1.143E-05
57449041451	574490	4145140	0	0	0	5.136E-05	1.284E-05
57449041451	574490	4145150	0	0	0	5.9E-05	1.475E-05
57450041451	574500	4145150	0	0	0	6.714E-05	1.678E-05
57446041451	574460	4145160	0	0	0	7.782E-05	1.946E-05
57449041451	574490	4145160	0	0	0	9.067E-05	2.267E-05
57450041451	574500	4145160	0	0	0	0.0001061	2.654E-05
57451041451	574510	4145160	0	0	0	0.0001255	3.138E-05
57446041451	574460	4145170	0	0	0	0.0001484	3.71E-05
57447041451	574470	4145170	0	0	0	0.0001749	4.371E-05
57448041451	574480	4145170	0	0	0	0.000205	5.124E-05
57449041451	574490	4145170	0	0	0	0.0002388	5.971E-05
57450041451	574500	4145170	0	0	0	0.0002736	6.84E-05
57451041451	574510	4145170	0	0	0	0.0003108	7.77E-05
57452041451	574520	4145170	0	0	0	0.0003332	8.329E-05
57446041451	574460	4145180	0	0	0	0.0003358	8.394E-05
57447041451	574470	4145180	0	0	0	0.0003256	8.14E-05
57448041451	574480	4145180	0	0	0	0.0003147	7.868E-05
57449041451	574490	4145180	0	0	0	0.0002826	7.064E-05
57450041451	574500	4145180	0	0	0	3.228E-05	8.069E-06
57451041451	574510	4145180	0	0	0	3.526E-05	8.815E-06
57452041451	574520	4145180	0	0	0	3.811E-05	9.527E-06
57453041451	574530	4145180	0	0	0	4.206E-05	1.051E-05
57445041451	574450	4145190	0	0	0	4.684E-05	1.171E-05
57446041451	574460	4145190	0	0	0	5.385E-05	1.346E-05
57447041451	574470	4145190	0	0	0	6.139E-05	1.535E-05
57448041451	574480	4145190	0	0	0	7.046E-05	1.761E-05
57449041451	574490	4145190	0	0	0	8.185E-05	2.046E-05
57450041451	574500	4145190	0	0	0	9.617E-05	2.404E-05
57451041451	574510	4145190	0	0	0	0.0001141	2.853E-05
57452041451	574520	4145190	0	0	0	0.0001375	3.437E-05
57444041452	574440	4145200	0	0	0	0.0001669	4.172E-05
57445041452	574450	4145200	0	0	0	0.0002023	5.059E-05
57446041452	574460	4145200	0	0	0	0.0002453	6.134E-05
57447041452	574470	4145200	0	0	0	0.0003024	7.559E-05
57448041452	574480	4145200	0	0	0	0.0003705	9.263E-05
57449041452	574490	4145200	0	0	0	0.0004382	0.0001096
57450041452	574500	4145200	0	0	0	0.0004921	0.000123
57451041452	574510	4145200	0	0	0	0.00051	0.0001275
57443041452	574430	4145210	0	0	0	0.0004492	0.0001123
57444041452	574440	4145210	0	0	0	0.0003974	9.935E-05
57445041452	574450	4145210	0	0	0	3.252E-05	8.131E-06
57446041452	574460	4145210	0	0	0	3.509E-05	8.772E-06
57447041452	574470	4145210	0	0	0	3.857E-05	9.641E-06
57448041452	574480	4145210	0	0	0	4.3E-05	1.075E-05
57449041452	574490	4145210	0	0	0	0.0007269	0.0001817
57450041452	574500	4145210	0	0	0	0.0005879	0.000147
57451041452	574510	4145210	0	0	0	3.267E-05	8.168E-06
57443041452	574430	4145220	0	0	0	3.53E-05	8.826E-06
57444041452	574440	4145220	0	0	0	3.898E-05	9.745E-06
57445041452	574450	4145220	0	0	0	0.0012893	0.0003223
57446041452	574460	4145220	0	0	0	0.0009118	0.0002279
57447041452	574470	4145220	0	0	0	3.243E-05	8.108E-06
57448041452	574480	4145220	0	0	0	3.546E-05	8.865E-06

Garvey Reservoir Rehab - Mitigated Proposed Pump Station

Cancer Risk Summary & Maximum Annual GLC for Chronic Calculations

Cancer Risk Summary

323

Max Risk: 0.15131

XY	X	Y	Offroad Risk	Haul Risk	Total Risk
7449041452	574490	4145220	0.026092406	0	0.026092
7450041452	574500	4145220	0.014774664	0	0.014775
7451041452	574510	4145220	0.000348097	0	0.000348
7452041452	574520	4145220	0.000382105	0	0.000382
7453041452	574530	4145220	0.063373506	0	0.063374
7444041452	574440	4145230	0.024393892	0	0.024394
7445041452	574450	4145230	0.000347447	0	0.000347
7446041452	574460	4145230	0.000381996	0	0.000382
7447041452	574470	4145230	0.104073568	0	0.104074
7448041452	574480	4145230	0.031469924	0	0.03147
7449041452	574490	4145230	0.000348638	0	0.000349
7450041452	574500	4145230	0.000379126	0	0.000379
7451041452	574510	4145230	0.151309971	0	0.15131
7452041452	574520	4145230	0.071781815	0	0.071782
7444041452	574440	4145240	0.031037457	0	0.031037
7445041452	574450	4145240	0.000344577	0	0.000345
7446041452	574460	4145240	0.000374957	0	0.000375
7447041452	574470	4145240	0.040572097	0	0.040572
7448041452	574480	4145240	0.046995801	0	0.046996
7449041452	574490	4145240	0.040037443	0	0.040037
7450041452	574500	4145240	0.024881595	0	0.024882
7451041452	574510	4145240	0.000339486	0	0.000339
7445041452	574450	4145250	0.000369433	0	0.000369
7446041452	574460	4145250	0.021610581	0	0.021611
7447041452	574470	4145250	0.02249187	0	0.022492
7448041452	574480	4145250	0.020879134	0	0.020879
7446041452	574460	4145260	0.016341477	0	0.016341
7447041452	574470	4145260	0.000332934	0	0.000333
7448041452	574480	4145260	0.000362826	0	0.000363
7447041452	574470	4145270	0.009851653	0	0.009852
7457041450	574570	4145030	0.013072521	0	0.013073
7463041450	574630	4145080	0.015439881	0	0.01544
7461041450	574610	4145090	0.015234045	0	0.015234
7462041450	574620	4145090	0.012809445	0	0.012809
7463041450	574630	4145090	0.000326923	0	0.000327
7464041450	574640	4145090	0.000355353	0	0.000355
7460041451	574600	4145100	0.00039039	0	0.00039
7461041451	574610	4145100	0.005345568	0	0.005346
7462041451	574620	4145100	0.006999785	0	0.007
7463041451	574630	4145100	0.008735286	0	0.008735
7464041451	574640	4145100	0.010077743	0	0.010078
7465041451	574650	4145100	0.010360855	0	0.010361
7459041451	574590	4145110	0.009559713	0	0.00956
7460041451	574600	4145110	0.000319287	0	0.000319
7461041451	574610	4145110	0.000346743	0	0.000347
7462041451	574620	4145110	0.000379668	0	0.00038
7463041451	574630	4145110	0.003292567	0	0.003293
7464041451	574640	4145110	0.004160317	0	0.00416
7465041451	574650	4145110	0.005197188	0	0.005197
7466041451	574660	4145110	0.00623812	0	0.006238
7460041451	574600	4145120	0.007022583	0	0.007023
7461041451	574610	4145120	0.007300985	0	0.007301
7462041451	574620	4145120	0.006976607	0	0.006977
7463041451	574630	4145120	0.000312355	0	0.000312
7464041451	574640	4145120	0.000337537	0	0.000338
7465041451	574650	4145120	0.000368133	0	0.000368
7466041451	574660	4145120	0.002159412	0	0.002159
7460041451	574600	4145130	0.002706955	0	0.002707
7462041451	574620	4145130	0.003305672	0	0.003306
7463041451	574630	4145130	0.004001107	0	0.004001
7464041451	574640	4145130	0.00469313	0	0.004693
7465041451	574650	4145130	0.005242081	0	0.005242

Max GLC for Chronic Calcs

Max GLC: 0.014082

XY	X	Y	2025	2026	2027	2034	2035
57449041452	574490	4145220	0	0	0	0.0024283	0.0006071
57450041452	574500	4145220	0	0	0	0.001375	0.0003438
57451041452	574510	4145220	0	0	0	3.24E-05	8.099E-06
57452041452	574520	4145220	0	0	0	3.556E-05	8.89E-06
57453041452	574530	4145220	0	0	0	0.005898	0.0014745
57444041452	574440	4145230	0	0	0	0.0022703	0.0005676
57445041452	574450	4145230	0	0	0	3.234E-05	8.084E-06
57446041452	574460	4145230	0	0	0	3.555E-05	8.888E-06
57447041452	574470	4145230	0	0	0	0.0096858	0.0024215
57448041452	574480	4145230	0	0	0	0.0029288	0.0007322
57449041452	574490	4145230	0	0	0	3.245E-05	8.112E-06
57450041452	574500	4145230	0	0	0	3.528E-05	8.821E-06
57451041452	574510	4145230	0	0	0	0.014082	0.0035205
57452041452	574520	4145230	0	0	0	0.0066805	0.0016701
57444041452	574440	4145240	0	0	0	0.0028886	0.0007221
57445041452	574450	4145240	0	0	0	3.207E-05	8.017E-06
57446041452	574460	4145240	0	0	0	3.49E-05	8.724E-06
57447041452	574470	4145240	0	0	0	0.0037759	0.000944
57448041452	574480	4145240	0	0	0	0.0043738	0.0010934
57449041452	574490	4145240	0	0	0	0.0037262	0.0009315
57450041452	574500	4145240	0	0	0	0.0023157	0.0005789
57451041452	574510	4145240	0	0	0	3.16E-05	7.899E-06
57445041452	574450	4145250	0	0	0	3.438E-05	8.596E-06
57446041452	574460	4145250	0	0	0	0.0020112	0.0005028
57447041452	574470	4145250	0	0	0	0.0020933	0.0005233
57448041452	574480	4145250	0	0	0	0.0019432	0.0004858
57446041452	574460	4145260	0	0	0	0.0015209	0.0003802
57447041452	574470	4145260	0	0	0	3.099E-05	7.746E-06
57448041452	574480	4145260	0	0	0	3.377E-05	8.442E-06
57447041452	574470	4145270	0	0	0	0.0009169	0.0002292
57457041450	574570	4145030	0	0	0	0.0012166	0.0003042
57463041450	574630	4145080	0	0	0	0.0014369	0.0003592
57461041450	574610	4145090	0	0	0	0.0014178	0.0003544
57462041450	574620	4145090	0	0	0	0.0011921	0.000298
57463041450	574630	4145090	0	0	0	3.043E-05	7.606E-06
57464041450	574640	4145090	0	0	0	3.307E-05	8.268E-06
57460041451	574600	4145100	0	0	0	3.633E-05	9.083E-06
57461041451	574610	4145100	0	0	0	0.0004975	0.0001244
57462041451	574620	4145100	0	0	0	0.0006515	0.0001629
57463041451	574630	4145100	0	0	0	0.000813	0.0002032
57464041451	574640	4145100	0	0	0	0.0009379	0.0002345
57465041451	574650	4145100	0	0	0	0.0009643	0.0002411
57459041451	574590	4145110	0	0	0	0.0008897	0.0002224
57460041451	574600	4145110	0	0	0	2.972E-05	7.429E-06
57461041451	574610	4145110	0	0	0	3.227E-05	8.068E-06
57462041451	574620	4145110	0	0	0	3.533E-05	8.834E-06
57463041451	574630	4145110	0	0	0	0.0003064	7.661E-05
57464041451	574640	4145110	0	0	0	0.0003872	9.68E-05
57465041451	574650	4145110	0	0	0	0.0004837	0.0001209
57466041451	574660	4145110	0	0	0	0.0005806	0.0001451
57460041451	574600	4145120	0	0	0	0.0006536	0.0001634
57461041451	574610	4145120	0	0	0	0.0006795	0.0001699
57462041451	574620	4145120	0	0	0	0.0006493	0.0001623
57463041451	574630	4145120	0	0	0	2.907E-05	7.268E-06
57464041451	574640	4145120	0	0	0	3.141E-05	7.853E-06
57465041451	574650	4145120	0	0	0	3.426E-05	8.565E-06
57466041451	574660	4145120	0	0	0	0.000201	5.024E-05
57460041451	574600	4145130	0	0	0	0.0002519	6.298E-05
57462041451	574620	4145130	0	0	0	0.0003076	7.691E-05
57463041451	574630	4145130	0	0	0	0.0003724	9.309E-05
57464041451	574640	4145130	0	0	0	0.0004368	0.0001092
57465041451	574650	4145130	0	0	0	0.0004879	0.000122

Garvey Reservoir Rehab - Mitigated Proposed Pump Station

Cancer Risk Summary & Maximum Annual GLC for Chronic Calculations

Cancer Risk Summary

323

Max Risk: 0.15131

XY	X	Y	Offroad Risk	Haul Risk	Total Risk
7463041451	574630	4145140	0.005445643	0	0.005446
7464041451	574640	4145140	0.00531535	0	0.005315
7459041451	574590	4145150	0.000303474	0	0.000303
7460041451	574600	4145150	0.00032741	0	0.000327
7460041451	574600	4145160	0.000356274	0	0.000356
7461041451	574610	4145160	0.001292582	0	0.001293
7461041451	574610	4145170	0.001526361	0	0.001526
7457041450	574570	4145030	0.001833193	0	0.001833
7463041450	574630	4145080	0.002225804	0	0.002226
7461041450	574610	4145090	0.002681936	0	0.002682
7462041450	574620	4145090	0.003158971	0	0.003159
7463041450	574630	4145090	0.003624634	0	0.003625
7464041450	574640	4145090	0.004001649	0	0.004002
7460041451	574600	4145100	0.004214741	0	0.004215
7461041451	574610	4145100	0.004202611	0	0.004203
7462041451	574620	4145100	0.000294322	0	0.000294
7463041451	574630	4145100	0.000317175	0	0.000317
7464041451	574640	4145100	0.00034371	0	0.000344
7465041451	574650	4145100	0.00037539	0	0.000375
7459041451	574590	4145110	0.000999884	0	0.001
7460041451	574600	4145110	0.001156116	0	0.001156
7461041451	574610	4145110	0.001344136	0	0.001344
7462041451	574620	4145110	0.001582843	0	0.001583
7463041451	574630	4145110	0.001864385	0	0.001864
7464041451	574640	4145110	0.002214594	0	0.002215
7465041451	574650	4145110	0.002554134	0	0.002554
7466041451	574660	4145110	0.002882194	0	0.002882
7460041451	574600	4145120	0.003148195	0	0.003148
7461041451	574610	4145120	0.003319914	0	0.00332
7462041451	574620	4145120	0.003354518	0	0.003355
7463041451	574630	4145120	0.000285333	0	0.000285
7464041451	574640	4145120	0.000306561	0	0.000307
7465041451	574650	4145120	0.000331796	0	0.000332
7466041451	574660	4145120	0.000359956	0	0.00036
7460041451	574600	4145130	0.000391906	0	0.000392
7462041451	574620	4145130	0.000573645	0	0.000574
7463041451	574630	4145130	0.000639603	0	0.00064
7464041451	574640	4145130	0.000712547	0	0.000713
7465041451	574650	4145130	0.000807207	0	0.000807
7463041451	574630	4145140	0.00091638	0	0.000916
7464041451	574640	4145140	0.001039254	0	0.001039
7459041451	574590	4145150	0.001198247	0	0.001198
7460041451	574600	4145150	0.001381881	0	0.001382
7460041451	574600	4145160	0.001588962	0	0.001589
7461041451	574610	4145160	0.001824041	0	0.001824
7461041451	574610	4145170	0.002104013	0	0.002104
7457041450	574570	4145030	0.002343208	0	0.002343
7463041450	574630	4145080	0.00254	0	0.00254
7461041450	574610	4145090	0.002675925	0	0.002676
7462041450	574620	4145090	0.002722984	0	0.002723
7463041450	574630	4145090	0.000276073	0	0.000276
7464041450	574640	4145090	0.00029546	0	0.000295
7460041451	574600	4145100	0.00031907	0	0.000319
7461041451	574610	4145100	0.000344739	0	0.000345
7462041451	574620	4145100	0.000373765	0	0.000374
7463041451	574630	4145100	0.000406799	0	0.000407
7464041451	574640	4145100	0.000444598	0	0.000445
7465041451	574650	4145100	0.000487487	0	0.000487
7459041451	574590	4145110	0.000537524	0	0.000538
7460041451	574600	4145110	0.000594439	0	0.000594
7461041451	574610	4145110	0.000660235	0	0.00066
7462041451	574620	4145110	0.000740274	0	0.00074

Max GLC for Chronic Calcs

Max GLC: 0.014082

XY	X	Y	2025	2026	2027	2034	2035
57463041451	574630	4145140	0	0	0	0.0005068	0.0001267
57464041451	574640	4145140	0	0	0	0.0004947	0.0001237
57459041451	574590	4145150	0	0	0	2.824E-05	7.061E-06
57460041451	574600	4145150	0	0	0	3.047E-05	7.618E-06
57460041451	574600	4145160	0	0	0	3.316E-05	8.289E-06
57461041451	574610	4145160	0	0	0	0.0001203	3.007E-05
57461041451	574610	4145170	0	0	0	0.0001421	3.551E-05
57457041450	574570	4145030	0	0	0	0.0001706	4.265E-05
57463041450	574630	4145080	0	0	0	0.0002071	5.179E-05
57461041450	574610	4145090	0	0	0	0.0002496	6.24E-05
57462041450	574620	4145090	0	0	0	0.000294	7.35E-05
57463041450	574630	4145090	0	0	0	0.0003373	8.433E-05
57464041450	574640	4145090	0	0	0	0.0003724	9.311E-05
57460041451	574600	4145100	0	0	0	0.0003923	9.806E-05
57461041451	574610	4145100	0	0	0	0.0003911	9.778E-05
57462041451	574620	4145100	0	0	0	2.739E-05	6.848E-06
57463041451	574630	4145100	0	0	0	2.952E-05	7.38E-06
57464041451	574640	4145100	0	0	0	3.199E-05	7.997E-06
57465041451	574650	4145100	0	0	0	3.494E-05	8.734E-06
57459041451	574590	4145110	0	0	0	9.306E-05	2.326E-05
57460041451	574600	4145110	0	0	0	0.0001076	2.69E-05
57461041451	574610	4145110	0	0	0	0.0001251	3.127E-05
57462041451	574620	4145110	0	0	0	0.0001473	3.683E-05
57463041451	574630	4145110	0	0	0	0.0001735	4.338E-05
57464041451	574640	4145110	0	0	0	0.0002061	5.153E-05
57465041451	574650	4145110	0	0	0	0.0002377	5.943E-05
57466041451	574660	4145110	0	0	0	0.0002682	6.706E-05
57460041451	574600	4145120	0	0	0	0.000293	7.325E-05
57461041451	574610	4145120	0	0	0	0.000309	7.724E-05
57462041451	574620	4145120	0	0	0	0.0003122	7.805E-05
57463041451	574630	4145120	0	0	0	2.656E-05	6.639E-06
57464041451	574640	4145120	0	0	0	2.853E-05	7.133E-06
57465041451	574650	4145120	0	0	0	3.088E-05	7.72E-06
57466041451	574660	4145120	0	0	0	3.35E-05	8.375E-06
57460041451	574600	4145130	0	0	0	3.647E-05	9.118E-06
57462041451	574620	4145130	0	0	0	5.339E-05	1.335E-05
57463041451	574630	4145130	0	0	0	5.953E-05	1.488E-05
57464041451	574640	4145130	0	0	0	6.631E-05	1.658E-05
57465041451	574650	4145130	0	0	0	7.512E-05	1.878E-05
57463041451	574630	4145140	0	0	0	8.528E-05	2.132E-05
57464041451	574640	4145140	0	0	0	9.672E-05	2.418E-05
57459041451	574590	4145150	0	0	0	0.0001115	2.788E-05
57460041451	574600	4145150	0	0	0	0.0001286	3.215E-05
57460041451	574600	4145160	0	0	0	0.0001479	3.697E-05
57461041451	574610	4145160	0	0	0	0.0001698	4.244E-05
57461041451	574610	4145170	0	0	0	0.0001958	4.895E-05
57457041450	574570	4145030	0	0	0	0.0002181	5.452E-05
57463041450	574630	4145080	0	0	0	0.0002364	5.91E-05
57461041450	574610	4145090	0	0	0	0.000249	6.226E-05
57462041450	574620	4145090	0	0	0	0.0002534	6.336E-05
57463041450	574630	4145090	0	0	0	2.569E-05	6.423E-06
57464041450	574640	4145090	0	0	0	2.75E-05	6.874E-06
57460041451	574600	4145100	0	0	0	2.97E-05	7.424E-06
57461041451	574610	4145100	0	0	0	3.208E-05	8.021E-06
57462041451	574620	4145100	0	0	0	3.479E-05	8.696E-06
57463041451	574630	4145100	0	0	0	3.786E-05	9.465E-06
57464041451	574640	4145100	0	0	0	4.138E-05	1.034E-05
57465041451	574650	4145100	0	0	0	4.537E-05	1.134E-05
57459041451	574590	4145110	0	0	0	5.003E-05	1.251E-05
57460041451	574600	4145110	0	0	0	5.532E-05	1.383E-05
57461041451	574610	4145110	0	0	0	6.145E-05	1.536E-05
57462041451	574620	4145110	0	0	0	6.89E-05	1.722E-05

Garvey Reservoir Rehab - Mitigated Proposed Pump Station

Cancer Risk Summary & Maximum Annual GLC for Chronic Calculations

Cancer Risk Summary

323

Max Risk: 0.15131

XY	X	Y	Offroad Risk	Haul Risk	Total Risk
7463041451	574630	4145110	0.00083163	0	0.000832
7464041451	574640	4145110	0.000932626	0	0.000933
7465041451	574650	4145110	0.001041961	0	0.001042
7466041451	574660	4145110	0.001202471	0	0.001202
7460041451	574600	4145120	0.00136818	0	0.001368
7461041451	574610	4145120	0.001555008	0	0.001555
7462041451	574620	4145120	0.001756729	0	0.001757
7463041451	574630	4145120	0.001936409	0	0.001936
7464041451	574640	4145120	0.002096215	0	0.002096
7465041451	574650	4145120	0.002199756	0	0.0022
7466041451	574660	4145120	0.002249793	0	0.00225
7460041451	574600	4145130	0.000265405	0	0.000265
7462041451	574620	4145130	0.000284412	0	0.000284
7463041451	574630	4145130	0.000305207	0	0.000305
7464041451	574640	4145130	0.000329251	0	0.000329
7465041451	574650	4145130	0.000355245	0	0.000355
7463041451	574630	4145140	0.000385192	0	0.000385
7464041451	574640	4145140	0.000418171	0	0.000418
7459041451	574590	4145150	0.000456186	0	0.000456
7460041451	574600	4145150	0.000499834	0	0.0005
7460041451	574600	4145160	0.000551009	0	0.000551
7461041451	574610	4145160	0.000608682	0	0.000609
7461041451	574610	4145170	0.000675561	0	0.000676
7457041450	574570	4145030	0.000753325	0	0.000753
7463041450	574630	4145080	0.000844031	0	0.000844
7461041450	574610	4145090	0.000929918	0	0.00093
7462041450	574620	4145090	0.001055987	0	0.001056
7463041450	574630	4145090	0.001193319	0	0.001193
7464041450	574640	4145090	0.001335905	0	0.001336
7460041451	574600	4145100	0.0014871	0	0.001487
7461041451	574610	4145100	0.001632014	0	0.001632
7462041451	574620	4145100	0.001754454	0	0.001754
7463041451	574630	4145100	0.001845323	0	0.001845
7464041451	574640	4145100	0.001893195	0	0.001893
7465041451	574650	4145100	0	0	0
7459041451	574590	4145110	0	0	0
7460041451	574600	4145110	0	0	0
7461041451	574610	4145110	0	0	0
7462041451	574620	4145110	0	0	0
7463041451	574630	4145110	0	0	0
7464041451	574640	4145110	0	0	0
7465041451	574650	4145110	0	0	0
7466041451	574660	4145110	0	0	0
7460041451	574600	4145120	0	0	0
7461041451	574610	4145120	0	0	0
7462041451	574620	4145120	0	0	0
7463041451	574630	4145120	0	0	0
7464041451	574640	4145120	0	0	0
7465041451	574650	4145120	0	0	0
7466041451	574660	4145120	0	0	0
7460041451	574600	4145130	0	0	0
7462041451	574620	4145130	0	0	0
7463041451	574630	4145130	0	0	0
7464041451	574640	4145130	0	0	0
7465041451	574650	4145130	0	0	0
7463041451	574630	4145140	0	0	0
7464041451	574640	4145140	0	0	0
7459041451	574590	4145150	0	0	0
7460041451	574600	4145150	0	0	0
7460041451	574600	4145160	0	0	0
7461041451	574610	4145160	0	0	0
7461041451	574610	4145170	0	0	0

Max GLC for Chronic Calcs

Max GLC: 0.014082

XY	X	Y	2025	2026	2027	2034	2035
57463041451	574630	4145110	0	0	0	7.74E-05	1.935E-05
57464041451	574640	4145110	0	0	0	8.68E-05	2.17E-05
57465041451	574650	4145110	0	0	0	9.697E-05	2.424E-05
57466041451	574660	4145110	0	0	0	0.0001119	2.798E-05
57460041451	574600	4145120	0	0	0	0.0001273	3.183E-05
57461041451	574610	4145120	0	0	0	0.0001447	3.618E-05
57462041451	574620	4145120	0	0	0	0.0001635	4.087E-05
57463041451	574630	4145120	0	0	0	0.0001802	4.505E-05
57464041451	574640	4145120	0	0	0	0.0001951	4.877E-05
57465041451	574650	4145120	0	0	0	0.0002047	5.118E-05
57466041451	574660	4145120	0	0	0	0.0002094	5.235E-05
57460041451	574600	4145130	0	0	0	2.47E-05	6.175E-06
57462041451	574620	4145130	0	0	0	2.647E-05	6.617E-06
57463041451	574630	4145130	0	0	0	2.84E-05	7.101E-06
57464041451	574640	4145130	0	0	0	3.064E-05	7.661E-06
57465041451	574650	4145130	0	0	0	3.306E-05	8.265E-06
57463041451	574630	4145140	0	0	0	3.585E-05	8.962E-06
57464041451	574640	4145140	0	0	0	3.892E-05	9.73E-06
57459041451	574590	4145150	0	0	0	4.246E-05	1.061E-05
57460041451	574600	4145150	0	0	0	4.652E-05	1.163E-05
57460041451	574600	4145160	0	0	0	5.128E-05	1.282E-05
57461041451	574610	4145160	0	0	0	5.665E-05	1.416E-05
57461041451	574610	4145170	0	0	0	6.287E-05	1.572E-05
57457041450	574570	4145030	0	0	0	7.011E-05	1.753E-05
57463041450	574630	4145080	0	0	0	7.855E-05	1.964E-05
57461041450	574610	4145090	0	0	0	8.654E-05	2.164E-05
57462041450	574620	4145090	0	0	0	9.828E-05	2.457E-05
57463041450	574630	4145090	0	0	0	0.0001111	2.776E-05
57464041450	574640	4145090	0	0	0	0.0001243	3.108E-05
57460041451	574600	4145100	0	0	0	0.0001384	3.46E-05
57461041451	574610	4145100	0	0	0	0.0001519	3.797E-05
57462041451	574620	4145100	0	0	0	0.0001633	4.082E-05
57463041451	574630	4145100	0	0	0	0.0001717	4.293E-05
57464041451	574640	4145100	0	0	0	0.0001762	4.405E-05
57465041451	574650	4145100	0	0	0	0	0
57459041451	574590	4145110	0	0	0	0	0
57460041451	574600	4145110	0	0	0	0	0
57461041451	574610	4145110	0	0	0	0	0
57462041451	574620	4145110	0	0	0	0	0
57463041451	574630	4145110	0	0	0	0	0
57464041451	574640	4145110	0	0	0	0	0
57465041451	574650	4145110	0	0	0	0	0
57466041451	574660	4145110	0	0	0	0	0
57460041451	574600	4145120	0	0	0	0	0
57461041451	574610	4145120	0	0	0	0	0
57462041451	574620	4145120	0	0	0	0	0
57463041451	574630	4145120	0	0	0	0	0
57464041451	574640	4145120	0	0	0	0	0
57465041451	574650	4145120	0	0	0	0	0
57466041451	574660	4145120	0	0	0	0	0
57460041451	574600	4145130	0	0	0	0	0
57462041451	574620	4145130	0	0	0	0	0
57463041451	574630	4145130	0	0	0	0	0
57464041451	574640	4145130	0	0	0	0	0
57465041451	574650	4145130	0	0	0	0	0
57463041451	574630	4145140	0	0	0	0	0
57464041451	574640	4145140	0	0	0	0	0
57459041451	574590	4145150	0	0	0	0	0
57460041451	574600	4145150	0	0	0	0	0
57460041451	574600	4145160	0	0	0	0	0
57461041451	574610	4145160	0	0	0	0	0
57461041451	574610	4145170	0	0	0	0	0

Garvey Reservoir Rehab - Mitigated Proposed Pump Station

Construction Modeling Assumptions

AERMOD Sources

Volume Sources		
Offroad Construction Exhaust		
Release Height	3.66	m
Emissions rate	1	g/s
Init Vert Dimension	3.4	m
Line Volume		
Onroad Hauling Exhaust		
Plume Height	7.315	m
Plume Width	20	m
Release Height	3.66	m
Emissions rate	1	g/s

Meteorology:

SCAQMD	Pico	Rivera	2010 - 2012, 2015 - 2016

SCAQMD Met Data

https://www.aqmd.gov/home/air-quality/meteorological-data/data-for-aermod

AERMOD Sources

Garvey Reservoir Rehab - Mitigated Proposed Pump Station

Health Risk Assessment Risk Factors

Residential Risk	Abbreviation	UOM	3rd Trimester	0<2	2<16	16<30
Daily Breathing Rate (95th %'ile)	DBR	L/kg-day	361	1090	572	261
Fraction Of Time At Home [a]	FAH	unitless	1	1	1	0.73
Exposure Frequency	EF	days/year	0.96	0.96	0.96	0.96
Age Sensitivity Factor	ASF	unitless	10	10	3	1
Inhalation Absorption Factor	A	unitless	1	1	1	1
Conversion Factor	CF_1	m^3/L	0.001	0.001	0.001	0.001
Conversion Factor	CF_2	$\mu g/m^3$	0.001	0.001	0.001	0.001
Cancer Potency Factor (diesel exhaust)	CPF	$mg/kg\text{-}day^{-1}$	1.1	1.1	1.1	1.1
Averaging Time (for residential exposure)	AT	years	70.00	70.00	70.00	70.00

[a] assume school or daycare will have cancer risk of >1 per million

Garvey Reservoir Rehab - Mitigated Proposed Pump Station

Health Risk Assessment Exposure Duration Assumptions for Offroad Equipment

Residential Receptors

			Start Date	*9/1/2025*	*12/1/2025*	*12/2/2027*
			End Date	*11/30/2025*	*12/1/2027*	*11/28/2041*
	9/1/2025	*5/31/2035*	*Days*	*90*	*730*	*5110*
Phase	Start Date	End Date	Duration (days)	3rd Tri	0<2	02<16
Demolition - 2025	9/1/2025	12/31/2027	852	0	0	0
Demolition - 2026			1	0	0	0
Site Preparation - 2034	1/1/2034	3/31/2034	90	0	0	90
Site Preparation - 2026			1	0	0	0
Grading - 2034	4/1/2034	5/31/2034	61	0	0	61
Grading - 2026			1	0	0	0
Infrastructure - 2034	6/1/2034	12/31/2034	214	0	0	214
Infrastructure - 2035	1/1/2035	5/31/2035	151	0	0	151
Paving - 2025			1	0	0	0
Architectural Coating - 2026			1	0	0	0

is the start/end dates for Phase 1 and 2

Intake Factor for Inhalation, IF (m^3/kg-day)

Phase	Year	Year	Equation	3rd Trimester	0<2	2<16
Demolition - 2025		2025		0	0	0
Demolition - 2026		1900	$\frac{DBR \cdot FAH \cdot EF \cdot ED \cdot ASF \cdot A \cdot CF_1}{AT}$	0	0	0
Site Preparation - 2034		2034		0	0	0.005802834
Site Preparation - 2026		1900		0	0	0
Grading - 2034		2034		0	0	0.003933032
Grading - 2026		1900		0	0	0
Infrastructure - 2034		2034		0	0	0.013797849
Infrastructure - 2035		2035		0	0	0.009735865
Paving - 2025		1900		0	0	0
Architectural Coating - 2026		1900		0	0	0

Risk Calculation Part 1, R1

Equation	3rd Trimester	0<2	2<16
	0	0	0
	0	0	0
	0	0	6.383E-06
	0	0	0
$IF \cdot CPF \cdot CF_2$	0	0	4.326E-06
	0	0	0
	0	0	1.518E-05
	0	0	1.071E-05
	0	0	0
	0	0	0

Garvey Reservoir Rehab - Mitigated Proposed Pump Station

Offroad DPM Emissions, Ground Level Concentrations and Health Risk Calculations

Residential Receptors

Phase	Year	Emissions (lbs/day)	Work Hours Per Day	Emissions (g/s)
Demolition - 2025	2025		10	0
Demolition - 2026	1900		10	0
Site Preparation - 2034	2034	0.020	10	0.000251994
Site Preparation - 2026	1900		10	0
Grading - 2034	2034	0.010	10	0.000125997
Grading - 2026	1900		10	0
Infrastructure - 2034	2034	0.010	10	0.000125997
Infrastructure - 2035	2035	0.010	10	0.000125997
Paving - 2025	1900		10	0
Architectural Coating - 2026	1900		10	0

			AERMOD Column Identifier:	*4*	*4*	*4*	*4*	*4*	*4*	*4*	*4*	*4*	*4*					
																		MMULT($D30:$M30, 'Exposure Durations'!M$30:M$39)
Garvey Reservoir Rehab - Mitigated Proposed Pump Station			Demolition - 2025	Demolition - 2026	Site Preparation - 2034	Site Preparation - 202	Grading - 2034	Grading - 2026	Infrastructure - 203	Infrastructure - 203	Paving - 2025	Architectural Coating - 2	Child Risk					
Unique Identifier	X (UTM)	Y (UTM)	2025	1900	2034	1900	2034	1900	2034	2035	1900	1900	3rd Trimester	0<2	2<16	Total	per million	
396166.283767377.28	396166.28	3767377	0	0	9.42711E-06	0	4.71356E-06	0	4.71356E-06	4.71356E-06	0	0	0	0	2.02587E-10	2.02587E-10	0.0002026	
396266.283767377.28	396266.28	3767377	0	0	1.04225E-05	0	5.21125E-06	0	5.21125E-06	5.21125E-06	0	0	0	0	2.23978E-10	2.23978E-10	0.000224	
396366.283767377.28	396366.28	3767377	0	0	1.19521E-05	0	5.97605E-06	0	5.97605E-06	5.97605E-06	0	0	0	0	2.56848E-10	2.56848E-10	0.0002568	
396466.283767377.28	396466.28	3767377	0	0	1.35775E-05	0	6.78873E-06	0	6.78873E-06	6.78873E-06	0	0	0	0	2.91777E-10	2.91777E-10	0.0002918	
396566.283767377.28	396566.28	3767377	0	0	1.56715E-05	0	7.83577E-06	0	7.83577E-06	7.83577E-06	0	0	0	0	3.36779E-10	3.36779E-10	0.0003368	
396666.283767377.28	396666.28	3767377	0	0	1.75791E-05	0	8.78957E-06	0	8.78957E-06	8.78957E-06	0	0	0	0	3.77773E-10	3.77773E-10	0.0003778	
396766.283767377.28	396766.28	3767377	0	0	1.94111E-05	0	9.70557E-06	0	9.70557E-06	9.70557E-06	0	0	0	0	4.17142E-10	4.17142E-10	0.0004171	
396866.283767377.28	396866.28	3767377	0	0	2.1548E-05	0	1.0774E-05	0	1.0774E-05	1.0774E-05	0	0	0	0	4.63064E-10	4.63064E-10	0.0004631	
396966.283767377.28	396966.28	3767377	0	0	2.4257E-05	0	1.21285E-05	0	1.21285E-05	1.21285E-05	0	0	0	0	5.21278E-10	5.21278E-10	0.0005213	
397066.283767377.28	397066.28	3767377	0	0	2.63183E-05	0	1.31591E-05	0	1.31591E-05	1.31591E-05	0	0	0	0	5.65576E-10	5.65576E-10	0.0005656	
397166.283767377.28	397166.28	3767377	0	0	2.7165E-05	0	1.35825E-05	0	1.35825E-05	1.35825E-05	0	0	0	0	5.83771E-10	5.83771E-10	0.0005838	
397266.283767377.28	397266.28	3767377	0	0	2.69483E-05	0	1.34741E-05	0	1.34741E-05	1.34741E-05	0	0	0	0	5.79114E-10	5.79114E-10	0.0005791	
397366.283767377.28	397366.28	3767377	0	0	2.7233E-05	0	1.36165E-05	0	1.36165E-05	1.36165E-05	0	0	0	0	5.85233E-10	5.85233E-10	0.0005852	
397466.283767377.28	397466.28	3767377	0	0	2.70138E-05	0	1.35069E-05	0	1.35069E-05	1.35069E-05	0	0	0	0	5.80522E-10	5.80522E-10	0.0005805	
397566.283767377.28	397566.28	3767377	0	0	2.5711E-05	0	1.28555E-05	0	1.28555E-05	1.28555E-05	0	0	0	0	5.52525E-10	5.52525E-10	0.0005525	
397666.283767377.28	397666.28	3767377	0	0	2.39521E-05	0	1.1976E-05	0	1.1976E-05	1.1976E-05	0	0	0	0	5.14726E-10	5.14726E-10	0.0005147	
397766.283767377.28	397766.28	3767377	0	0	2.12784E-05	0	1.06392E-05	0	1.06392E-05	1.06392E-05	0	0	0	0	4.57269E-10	4.57269E-10	0.0004573	
397866.283767377.28	397866.28	3767377	0	0	1.90432E-05	0	9.52161E-06	0	9.52161E-06	9.52161E-06	0	0	0	0	4.09236E-10	4.09236E-10	0.0004092	
396166.283767477.28	396166.28	3767477	0	0	9.91094E-06	0	4.95547E-06	0	4.95547E-06	4.95547E-06	0	0	0	0	2.12984E-10	2.12984E-10	0.000213	
396266.283767477.28	396266.28	3767477	0	0	1.08912E-05	0	5.4456E-06	0	5.4456E-06	5.4456E-06	0	0	0	0	2.3405E-10	2.3405E-10	0.0002341	
396366.283767477.28	396366.28	3767477	0	0	1.26804E-05	0	6.34018E-06	0	6.34018E-06	6.34018E-06	0	0	0	0	2.72499E-10	2.72499E-10	0.0002725	
396466.283767477.28	396466.28	3767477	0	0	1.46787E-05	0	7.33934E-06	0	7.33934E-06	7.33934E-06	0	0	0	0	3.15442E-10	3.15442E-10	0.0003154	
396566.283767477.28	396566.28	3767477	0	0	1.70021E-05	0	8.50103E-06	0	8.50103E-06	8.50103E-06	0	0	0	0	3.65371E-10	3.65371E-10	0.0003654	
396666.283767477.28	396666.28	3767477	0	0	1.95321E-05	0	9.76604E-06	0	9.76604E-06	9.76604E-06	0	0	0	0	4.19741E-10	4.19741E-10	0.0004197	
396766.283767477.28	396766.28	3767477	0	0	2.24174E-05	0	1.12087E-05	0	1.12087E-05	1.12087E-05	0	0	0	0	4.81747E-10	4.81747E-10	0.0004817	
396866.283767477.28	396866.28	3767477	0	0	2.57765E-05	0	1.28883E-05	0	1.28883E-05	1.28883E-05	0	0	0	0	5.53933E-10	5.53933E-10	0.0005539	
396966.283767477.28	396966.28	3767477	0	0	3.0073E-05	0	1.50365E-05	0	1.50365E-05	1.50365E-05	0	0	0	0	6.46264E-10	6.46264E-10	0.0006463	
397066.283767477.28	397066.28	3767477	0	0	3.3926E-05	0	1.6963E-05	0	1.6963E-05	1.6963E-05	0	0	0	0	7.29064E-10	7.29064E-10	0.0007291	
397166.283767477.28	397166.28	3767477	0	0	3.6204E-05	0	1.8102E-05	0	1.8102E-05	1.8102E-05	0	0	0	0	7.78019E-10	7.78019E-10	0.000778	
397266.283767477.28	397266.28	3767477	0	0	3.66198E-05	0	1.83099E-05	0	1.83099E-05	1.83099E-05	0	0	0	0	7.86954E-10	7.86954E-10	0.000787	
397366.283767477.28	397366.28	3767477	0	0	3.65342E-05	0	1.82671E-05	0	1.82671E-05	1.82671E-05	0	0	0	0	7.85113E-10	7.85113E-10	0.0007851	
397466.283767477.28	397466.28	3767477	0	0	3.62166E-05	0	1.81083E-05	0	1.81083E-05	1.81083E-05	0	0	0	0	7.78289E-10	7.78289E-10	0.0007783	
397566.283767477.28	397566.28	3767477	0	0	3.41251E-05	0	1.70625E-05	0	1.70625E-05	1.70625E-05	0	0	0	0	7.33342E-10	7.33342E-10	0.0007333	
397666.283767477.28	397666.28	3767477	0	0	3.09449E-05	0	1.54725E-05	0	1.54725E-05	1.54725E-05	0	0	0	0	6.65001E-10	6.65001E-10	0.000665	
397766.283767477.28	397766.28	3767477	0	0	2.73162E-05	0	1.36581E-05	0	1.36581E-05	1.36581E-05	0	0	0	0	5.8702E-10	5.8702E-10	0.000587	
397866.283767477.28	397866.28	3767477	0	0	2.37404E-05	0	1.18702E-05	0	1.18702E-05	1.18702E-05	0	0	0	0	5.10177E-10	5.10177E-10	0.0005102	
396166.283767577.28	396166.28	3767577	0	0	1.01755E-05	0	5.08777E-06	0	5.08777E-06	5.08777E-06	0	0	0	0	2.18671E-10	2.18671E-10	0.0002187	
396266.283767577.28	396266.28	3767577	0	0	1.13901E-05	0	5.69507E-06	0	5.69507E-06	5.69507E-06	0	0	0	0	2.44772E-10	2.44772E-10	0.0002448	
396366.283767577.28	396366.28	3767577	0	0	1.31642E-05	0	6.58209E-06	0	6.58209E-06	6.58209E-06	0	0	0	0	2.82896E-10	2.82896E-10	0.0002829	
396466.283767577.28	396466.28	3767577	0	0	1.54825E-05	0	7.74127E-06	0	7.74127E-06	7.74127E-06	0	0	0	0	3.32717E-10	3.32717E-10	0.0003327	
396566.283767577.28	396566.28	3767577	0	0	1.84107E-05	0	9.20536E-06	0	9.20536E-06	9.20536E-06	0	0	0	0	3.95643E-10	3.95643E-10	0.0003956	
396666.283767577.28	396666.28	3767577	0	0	2.19865E-05	0	1.09933E-05	0	1.09933E-05	1.09933E-05	0	0	0	0	4.72486E-10	4.72486E-10	0.0004725	
396766.283767577.28	396766.28	3767577	0	0	2.53431E-05	0	1.26715E-05	0	1.26715E-05	1.26715E-05	0	0	0	0	5.44618E-10	5.44618E-10	0.0005446	
396866.283767577.28	396866.28	3767577	0	0	3.09374E-05	0	1.54687E-05	0	1.54687E-05	1.54687E-05	0	0	0	0	6.64838E-10	6.64838E-10	0.0006648	
396966.283767577.28	396966.28	3767577	0	0	3.73531E-05	0	1.86766E-05	0	1.86766E-05	1.86766E-05	0	0	0	0	8.02712E-10	8.02712E-10	0.0008027	
397066.283767577.28	397066.28	3767577	0	0	4.41847E-05	0	2.20924E-05	0	2.20924E-05	2.20924E-05	0	0	0	0	9.49522E-10	9.49522E-10	0.0009495	
397166.283767577.28	397166.28	3767577	0	0	5.00562E-05	0	2.50281E-05	0	2.50281E-05	2.50281E-05	0	0	0	0	1.0757E-09	1.0757E-09	0.0010757	
397266.283767577.28	397266.28	3767577	0	0	5.25711E-05	0	2.62855E-05	0	2.62855E-05	2.62855E-05	0	0	0	0	1.12974E-09	1.12974E-09	0.0011297	
397366.283767577.28	397366.28	3767577	0	0	5.25056E-05	0	2.62528E-05	0	2.62528E-05	2.62528E-05	0	0	0	0	1.12834E-09	1.12834E-09	0.0011283	

Garvey Reservoir Rehab - Mitigated Proposed Pump Station			Demolition - 2025	Demolition - 2026	Site Preparation - 203	Site Preparation - 202	Grading - 2034	Grading - 2026	Infrastructure - 203	Infrastructure - 203	Paving - 2025	Architectural Coating - 2	Child Risk					
Unique Identifier	X (UTM)	Y (UTM)	2025	1900	2034	1900	2034	1900	2034	2035	1900	1900	3rd Trimester	0<2	2<16	Total	per million
397466.283767577.28	397466.28	3767577	0	0	5.18907E-05	0	2.59453E-05	0	2.59453E-05	2.59453E-05	0	0	0	0	1.11512E-09	1.11512E-09	0.0011151
397566.283767577.28	397566.28	3767577	0	0	4.76521E-05	0	2.38261E-05	0	2.38261E-05	2.38261E-05	0	0	0	0	1.02404E-09	1.02404E-09	0.001024
397666.283767577.28	397666.28	3767577	0	0	4.18134E-05	0	2.09067E-05	0	2.09067E-05	2.09067E-05	0	0	0	0	8.98564E-10	8.98564E-10	0.0008986
397766.283767577.28	397766.28	3767577	0	0	3.54128E-05	0	1.77064E-05	0	1.77064E-05	1.77064E-05	0	0	0	0	7.61015E-10	7.61015E-10	0.000761
397866.283767577.28	397866.28	3767577	0	0	2.95539E-05	0	1.4777E-05	0	1.4777E-05	1.4777E-05	0	0	0	0	6.35108E-10	6.35108E-10	0.0006351
396166.283767677.28	396166.28	3767677	0	0	1.05157E-05	0	5.25786E-06	0	5.25786E-06	5.25786E-06	0	0	0	0	2.25981E-10	2.25981E-10	0.000226
396266.283767677.28	396266.28	3767677	0	0	1.18538E-05	0	5.92691E-06	0	5.92691E-06	5.92691E-06	0	0	0	0	2.54737E-10	2.54737E-10	0.0002547
396366.283767677.28	396366.28	3767677	0	0	1.38219E-05	0	6.91095E-06	0	6.91095E-06	6.91095E-06	0	0	0	0	2.9703E-10	2.9703E-10	0.000297
396466.283767677.28	396466.28	3767677	0	0	1.64477E-05	0	8.22384E-06	0	8.22384E-06	8.22384E-06	0	0	0	0	3.53458E-10	3.53458E-10	0.0003535
396566.283767677.28	396566.28	3767677	0	0	1.96404E-05	0	9.82022E-06	0	9.82022E-06	9.82022E-06	0	0	0	0	4.2207E-10	4.2207E-10	0.0004221
396666.283767677.28	396666.28	3767677	0	0	2.31608E-05	0	1.15804E-05	0	1.15804E-05	1.15804E-05	0	0	0	0	4.97722E-10	4.97722E-10	0.0004977
396766.283767677.28	396766.28	3767677	0	0	2.88508E-05	0	1.44254E-05	0	1.44254E-05	1.44254E-05	0	0	0	0	6.2E-10	6.2E-10	0.00062
396866.283767677.28	396866.28	3767677	0	0	3.72322E-05	0	1.86161E-05	0	1.86161E-05	1.86161E-05	0	0	0	0	8.00113E-10	8.00113E-10	0.0008001
396966.283767677.28	396966.28	3767677	0	0	4.81133E-05	0	2.40566E-05	0	2.40566E-05	2.40566E-05	0	0	0	0	1.03395E-09	1.03395E-09	0.0010339
397066.283767677.28	397066.28	3767677	0	0	5.99318E-05	0	2.99659E-05	0	2.99659E-05	2.99659E-05	0	0	0	0	1.28792E-09	1.28792E-09	0.0012879
397166.283767677.28	397166.28	3767677	0	0	7.24156E-05	0	3.62078E-05	0	3.62078E-05	3.62078E-05	0	0	0	0	1.5562E-09	1.5562E-09	0.0015562
397266.283767677.28	397266.28	3767677	0	0	8.30775E-05	0	4.15388E-05	0	4.15388E-05	4.15388E-05	0	0	0	0	1.78532E-09	1.78532E-09	0.0017853
397366.283767677.28	397366.28	3767677	0	0	8.36042E-05	0	4.18021E-05	0	4.18021E-05	4.18021E-05	0	0	0	0	1.79664E-09	1.79664E-09	0.0017966
397466.283767677.28	397466.28	3767677	0	0	8.18201E-05	0	4.091E-05	0	4.091E-05	4.091E-05	0	0	0	0	1.7583E-09	1.7583E-09	0.0017583
397566.283767677.28	397566.28	3767677	0	0	7.15992E-05	0	3.57996E-05	0	3.57996E-05	3.57996E-05	0	0	0	0	1.53865E-09	1.53865E-09	0.0015387
397666.283767677.28	397666.28	3767677	0	0	5.89113E-05	0	2.94556E-05	0	2.94556E-05	2.94556E-05	0	0	0	0	1.26599E-09	1.26599E-09	0.001266
397766.283767677.28	397766.28	3767677	0	0	4.68861E-05	0	2.3443E-05	0	2.3443E-05	2.3443E-05	0	0	0	0	1.00757E-09	1.00757E-09	0.0010076
397866.283767677.28	397866.28	3767677	0	0	3.68567E-05	0	1.84284E-05	0	1.84284E-05	1.84284E-05	0	0	0	0	7.92044E-10	7.92044E-10	0.000792
396166.283767777.28	396166.28	3767777	0	0	1.07198E-05	0	5.35992E-06	0	5.35992E-06	5.35992E-06	0	0	0	0	2.30368E-10	2.30368E-10	0.0002304
396266.283767777.28	396266.28	3767777	0	0	1.23679E-05	0	6.18394E-06	0	6.18394E-06	6.18394E-06	0	0	0	0	2.65784E-10	2.65784E-10	0.0002658
396366.283767777.28	396366.28	3767777	0	0	1.43486E-05	0	7.17428E-06	0	7.17428E-06	7.17428E-06	0	0	0	0	3.08348E-10	3.08348E-10	0.0003083
396466.283767777.28	396466.28	3767777	0	0	1.70323E-05	0	8.51615E-06	0	8.51615E-06	8.51615E-06	0	0	0	0	3.66021E-10	3.66021E-10	0.000366
396566.283767777.28	396566.28	3767777	0	0	2.02604E-05	0	1.01302E-05	0	1.01302E-05	1.01302E-05	0	0	0	0	4.35391E-10	4.35391E-10	0.0004354
396666.283767777.28	396666.28	3767777	0	0	2.49172E-05	0	1.24586E-05	0	1.24586E-05	1.24586E-05	0	0	0	0	5.35467E-10	5.35467E-10	0.0005355
396766.283767777.28	396766.28	3767777	0	0	3.24266E-05	0	1.62133E-05	0	1.62133E-05	1.62133E-05	0	0	0	0	6.96843E-10	6.96843E-10	0.0006968
396866.283767777.28	396866.28	3767777	0	0	4.35169E-05	0	2.17585E-05	0	2.17585E-05	2.17585E-05	0	0	0	0	9.35171E-10	9.35171E-10	0.0009352
396966.283767777.28	396966.28	3767777	0	0	5.96143E-05	0	2.98072E-05	0	2.98072E-05	2.98072E-05	0	0	0	0	1.2811E-09	1.2811E-09	0.0012811
397066.283767777.28	397066.28	3767777	0	0	8.20192E-05	0	4.10096E-05	0	4.10096E-05	4.10096E-05	0	0	0	0	1.76258E-09	1.76258E-09	0.0017626
397166.283767777.28	397166.28	3767777	0	0	0.000110565	0	5.52825E-05	0	5.52825E-05	5.52825E-05	0	0	0	0	2.37602E-09	2.37602E-09	0.002376
397266.283767777.28	397266.28	3767777	0	0	0.000142541	0	7.12703E-05	0	7.12703E-05	7.12703E-05	0	0	0	0	3.06317E-09	3.06317E-09	0.0030632
397366.283767777.28	397366.28	3767777	0	0	0.000154679	0	7.73396E-05	0	7.73396E-05	7.73396E-05	0	0	0	0	3.32403E-09	3.32403E-09	0.003324
397466.283767777.28	397466.28	3767777	0	0	0.000147198	0	7.35988E-05	0	7.35988E-05	7.35988E-05	0	0	0	0	3.16325E-09	3.16325E-09	0.0031632
397566.283767777.28	397566.28	3767777	0	0	0.000118359	0	5.91796E-05	0	5.91796E-05	5.91796E-05	0	0	0	0	2.54352E-09	2.54352E-09	0.0025435
397666.283767777.28	397666.28	3767777	0	0	8.69582E-05	0	4.34791E-05	0	4.34791E-05	4.34791E-05	0	0	0	0	1.86872E-09	1.86872E-09	0.0018687
397766.283767777.28	397766.28	3767777	0	0	6.3117E-05	0	3.15585E-05	0	3.15585E-05	3.15585E-05	0	0	0	0	1.35637E-09	1.35637E-09	0.0013564
397866.283767777.28	397866.28	3767777	0	0	4.64149E-05	0	2.32074E-05	0	2.32074E-05	2.32074E-05	0	0	0	0	9.97447E-10	9.97447E-10	0.0009974
396166.283767877.28	396166.28	3767877	0	0	1.08307E-05	0	5.41536E-06	0	5.41536E-06	5.41536E-06	0	0	0	0	2.3275E-10	2.3275E-10	0.0002328
396266.283767877.28	396266.28	3767877	0	0	1.25443E-05	0	6.27214E-06	0	6.27214E-06	6.27214E-06	0	0	0	0	2.69574E-10	2.69574E-10	0.0002696
396366.283767877.28	396366.28	3767877	0	0	1.46938E-05	0	7.3469E-06	0	7.3469E-06	7.3469E-06	0	0	0	0	3.15767E-10	3.15767E-10	0.0003158
396466.283767877.28	396466.28	3767877	0	0	1.73775E-05	0	8.68877E-06	0	8.68877E-06	8.68877E-06	0	0	0	0	3.7344E-10	3.7344E-10	0.0003734
396566.283767877.28	396566.28	3767877	0	0	2.09231E-05	0	1.04615E-05	0	1.04615E-05	1.04615E-05	0	0	0	0	4.49634E-10	4.49634E-10	0.0004496
397466.283767877.28	397466.28	3767877	0	0	0.000325239	0	0.00016262	0	0.00016262	0.00016262	0	0	0	0	6.98933E-09	6.98933E-09	0.0069893
397566.283767877.28	397566.28	3767877	0	0	0.000219449	0	0.000109725	0	0.000109725	0.000109725	0	0	0	0	4.71593E-09	4.71593E-09	0.0047159
397666.283767877.28	397666.28	3767877	0	0	0.000132741	0	6.63703E-05	0	6.63703E-05	6.63703E-05	0	0	0	0	2.85257E-09	2.85257E-09	0.0028526
397766.283767877.28	397766.28	3767877	0	0	8.43476E-05	0	4.21738E-05	0	4.21738E-05	4.21738E-05	0	0	0	0	1.81261E-09	1.81261E-09	0.0018126
397866.283767877.28	397866.28	3767877	0	0	5.68323E-05	0	2.84162E-05	0	2.84162E-05	2.84162E-05	0	0	0	0	1.22132E-09	1.22132E-09	0.0012213
396166.283767977.28	396166.28	3767977	0	0	1.07879E-05	0	5.39394E-06	0	5.39394E-06	5.39394E-06	0	0	0	0	2.3183E-10	2.3183E-10	0.0002318
396266.283767977.28	396266.28	3767977	0	0	1.25518E-05	0	6.27592E-06	0	6.27592E-06	6.27592E-06	0	0	0	0	2.69737E-10	2.69737E-10	0.0002697
396366.283767977.28	396366.28	3767977	0	0	1.47366E-05	0	7.36832E-06	0	7.36832E-06	7.36832E-06	0	0	0	0	3.16688E-10	3.16688E-10	0.0003167
396466.283767977.28	396466.28	3767977	0	0	1.74279E-05	0	8.71397E-06	0	8.71397E-06	8.71397E-06	0	0	0	0	3.74523E-10	3.74523E-10	0.0003745
397466.283767977.28	397466.28	3767977	0	0	0.001164663	0	0.000582331	0	0.000582331	0.000582331	0	0	0	0	2.50284E-08	2.50284E-08	0.0250284
397566.283767977.28	397566.28	3767977	0	0	0.000413127	0	0.000206564	0	0.000206564	0.000206564	0	0	0	0	8.87803E-09	8.87803E-09	0.008878
397666.283767977.28	397666.28	3767977	0	0	0.00018765	0	9.38251E-05	0	9.38251E-05	9.38251E-05	0	0	0	0	4.03257E-09	4.03257E-09	0.0040326
397766.283767977.28	397766.28	3767977	0	0	0.000107468	0	5.3734E-05	0	5.3734E-05	5.3734E-05	0	0	0	0	2.30947E-09	2.30947E-09	0.0023095
397866.283767977.28	397866.28	3767977	0	0	6.55841E-05	0	3.2792E-05	0	3.2792E-05	3.2792E-05	0	0	0	0	1.40939E-09	1.40939E-09	0.0014094
396166.283768077.28	396166.28	3768077	0	0	1.08761E-05	0	5.43804E-06	0	5.43804E-06	5.43804E-06	0	0	0	0	2.33725E-10	2.33725E-10	0.0002337
396266.283768077.28	396266.28	3768077	0	0	1.24536E-05	0	6.22678E-06	0	6.22678E-06	6.22678E-06	0	0	0	0	2.67625E-10	2.67625E-10	0.0002676
396366.283768077.28	396366.28	3768077	0	0	1.46132E-05	0	7.30658E-06	0	7.30658E-06	7.30658E-06	0	0	0	0	3.14034E-10	3.14034E-10	0.000314
396466.283768077.28	396466.28	3768077	0	0	1.7496E-05	0	8.74799E-06	0	8.74799E-06	8.74799E-06	0	0	0	0	3.75985E-10	3.75985E-10	0.000376
397466.283768077.28	397466.28	3768077	0	0	0.006065897	0	0.003032948	0	0.003032948	0.003032948	0	0	0	0	1.30355E-07	1.30355E-07	0.1303551
397566.283768077.28	397566.28	3768077	0	0	0.000752297	0	0.000376148	0	0.000376148	0.000376148	0	0	0	0	1.61667E-08	1.61667E-08	0.0161667
397666.283768077.28	397666.28	3768077	0	0	0.000266915	0	0.000133458	0	0.000133458	0.000133458	0	0	0	0	5.73596E-09	5.73596E-09	0.005736
397766.283768077.28	397766.28	3768077	0	0	0.000133602	0	6.68012E-05	0	6.68012E-05	6.68012E-05	0	0	0	0	2.87109E-09	2.87109E-09	0.0028711
397866.283768077.28	397866.28	3768077	0	0	7.76798E-05	0	3.88399E-05	0	3.88399E-05	3.88399E-05	0	0	0	0	1.66933E-09	1.66933E-09	0.0016693
396166.283768177.28	396166.28	3768177	0	0	1.07803E-05	0	5.39016E-06	0	5.39016E-06	5.39016E-06	0	0	0	0	2.31667E-10	2.31667E-10	0.0002317
396266.283768177.28	396266.28	3768177	0	0	1.23855E-05	0	6.19276E-06	0	6.19276E-06	6.19276E-06	0	0	0	0	2.66163E-10	2.66163E-10	0.0002662
396366.283768177.28	396366.28	3768177	0	0	1.45098E-05	0	7.25492E-06	0	7.25492E-06	7.25492E-06	0	0	0	0	3.11814E-10	3.11814E-10	0.0003118
396466.283768177.28	396466.28	3768177	0	0	1.72188E-05	0	8.60939E-06	0	8.60939E-06	8.60939E-06	0	0	0	0	3.70029E-10	3.70029E-10	0.00037
397466.283768177.28	397466.28	3768177	0	0	0.002310031	0	0.001155015	0	0.001155015	0.001155015	0	0	0	0	4.96422E-08	4.96422E-08	0.0496422
397566.283768177.28	397566.28	3768177	0	0	0.00076348	0	0.00038174	0	0.00038174	0.00038174	0	0	0	0	1.64071E-08	1.64071E-08	0.0164071
397666.283768177.28	397666.28	3768177	0	0	0.000301209	0	0.000150604	0	0.000150604	0.000150604	0	0	0	0	6.47293E-09	6.47293E-09	0.0064729
397766.283768177.28	397766.28	3768177	0	0	0.000155985	0	7.79923E-05	0	7.79923E-05	7.79923E-05	0	0	0	0	3.35208E-09	3.35208E-09	0.0033521

Garvey Reservoir Rehab - Mitigated Proposed Pump Station			Demolition - 2025	Demolition - 2026	Site Preparation - 203	Site Preparation - 202	Grading - 2034	Grading - 2026	Infrastructure - 203	Infrastructure - 203	Paving - 2025	Architectural Coating - 2	Child Risk					
Unique Identifier	X (UTM)	Y (UTM)	2025	1900	2034	1900	2034	1900	2034	2035	1900	1900	3rd Trimester	0<2	2<16	Total	per million	
397866.283768177.28	397866.28	3768177	0	0	8.75555E-05	0	4.37777E-05	0	4.37777E-05	4.37777E-05	0	0	0	0	1.88155E-09	1.88155E-09	0.0018816	
396166.283768277.28	396166.28	3768277	0	0	1.05888E-05	0	5.2944E-06	0	5.2944E-06	5.2944E-06	0	0	0	0	2.27552E-10	2.27552E-10	0.0002276	
396266.283768277.28	396266.28	3768277	0	0	1.20731E-05	0	6.03653E-06	0	6.03653E-06	6.03653E-06	0	0	0	0	2.59448E-10	2.59448E-10	0.0002594	
396366.283768277.28	396366.28	3768277	0	0	1.41016E-05	0	7.0508E-06	0	7.0508E-06	7.0508E-06	0	0	0	0	3.03041E-10	3.03041E-10	0.000303	
396466.283768277.28	396466.28	3768277	0	0	1.66972E-05	0	8.34858E-06	0	8.34858E-06	8.34858E-06	0	0	0	0	3.58819E-10	3.58819E-10	0.0003588	
397366.283768277.28	397366.28	3768277	0	0	0.000649811	0	0.000324905	0	0.000324905	0.000324905	0	0	0	0	1.39643E-08	1.39643E-08	0.0139643	
397466.283768277.28	397466.28	3768277	0	0	0.000762979	0	0.000381489	0	0.000381489	0.000381489	0	0	0	0	1.63963E-08	1.63963E-08	0.0163963	
397566.283768277.28	397566.28	3768277	0	0	0.000517619	0	0.00025881	0	0.00025881	0.00025881	0	0	0	0	1.11235E-08	1.11235E-08	0.0111235	
397666.283768277.28	397666.28	3768277	0	0	0.000271849	0	0.000135925	0	0.000135925	0.000135925	0	0	0	0	5.84199E-09	5.84199E-09	0.005842	
397766.283768277.28	397766.28	3768277	0	0	0.000153238	0	7.66189E-05	0	7.66189E-05	7.66189E-05	0	0	0	0	3.29305E-09	3.29305E-09	0.0032931	
397866.283768277.28	397866.28	3768277	0	0	9.68919E-05	0	4.84459E-05	0	4.84459E-05	4.84459E-05	0	0	0	0	2.08219E-09	2.08219E-09	0.0020822	
396166.283768377.28	396166.28	3768377	0	0	1.02285E-05	0	5.11423E-06	0	5.11423E-06	5.11423E-06	0	0	0	0	2.19808E-10	2.19808E-10	0.0002198	
396266.283768377.28	396266.28	3768377	0	0	1.17228E-05	0	5.86139E-06	0	5.86139E-06	5.86139E-06	0	0	0	0	2.51921E-10	2.51921E-10	0.0002519	
396366.283768377.28	396366.28	3768377	0	0	1.35926E-05	0	6.79629E-06	0	6.79629E-06	6.79629E-06	0	0	0	0	2.92102E-10	2.92102E-10	0.0002921	
396466.283768377.28	396466.28	3768377	0	0	1.60067E-05	0	8.00334E-06	0	8.00334E-06	8.00334E-06	0	0	0	0	3.43981E-10	3.43981E-10	0.000344	
397266.283768377.28	397266.28	3768377	0	0	0.000196523	0	9.82615E-05	0	9.82615E-05	9.82615E-05	0	0	0	0	4.22324E-09	4.22324E-09	0.0042232	
397366.283768377.28	397366.28	3768377	0	0	0.000303779	0	0.00015189	0	0.00015189	0.00015189	0	0	0	0	6.52816E-09	6.52816E-09	0.0065282	
397466.283768377.28	397466.28	3768377	0	0	0.000366536	0	0.000183268	0	0.000183268	0.000183268	0	0	0	0	7.8768E-09	7.8768E-09	0.0078768	
397566.283768377.28	397566.28	3768377	0	0	0.000320144	0	0.000160072	0	0.000160072	0.000160072	0	0	0	0	6.87984E-09	6.87984E-09	0.0068798	
397666.283768377.28	397666.28	3768377	0	0	0.000222972	0	0.000111486	0	0.000111486	0.000111486	0	0	0	0	4.79164E-09	4.79164E-09	0.0047916	
397766.283768377.28	397766.28	3768377	0	0	0.000144471	0	7.22355E-05	0	7.22355E-05	7.22355E-05	0	0	0	0	3.10466E-09	3.10466E-09	0.0031047	
397866.283768377.28	397866.28	3768377	0	0	9.89809E-05	0	4.94904E-05	0	4.94904E-05	4.94904E-05	0	0	0	0	2.12708E-09	2.12708E-09	0.0021271	
396166.283768477.28	396166.28	3768477	0	0	9.86306E-06	0	4.93153E-06	0	4.93153E-06	4.93153E-06	0	0	0	0	2.11956E-10	2.11956E-10	0.000212	
396266.283768477.28	396266.28	3768477	0	0	1.1307E-05	0	5.6535E-06	0	5.6535E-06	5.6535E-06	0	0	0	0	2.42985E-10	2.42985E-10	0.000243	
396366.283768477.28	396366.28	3768477	0	0	1.30281E-05	0	6.51406E-06	0	6.51406E-06	6.51406E-06	0	0	0	0	2.79972E-10	2.79972E-10	0.00028	
396466.283768477.28	396466.28	3768477	0	0	1.51398E-05	0	7.56991E-06	0	7.56991E-06	7.56991E-06	0	0	0	0	3.25352E-10	3.25352E-10	0.0003254	
397166.283768477.28	397166.28	3768477	0	0	8.54639E-05	0	4.2732E-05	0	4.2732E-05	4.2732E-05	0	0	0	0	1.8366E-09	1.8366E-09	0.0018366	
397266.283768477.28	397266.28	3768477	0	0	0.000126904	0	6.34522E-05	0	6.34522E-05	6.34522E-05	0	0	0	0	2.72715E-09	2.72715E-09	0.0027272	
397366.283768477.28	397366.28	3768477	0	0	0.000174768	0	8.73841E-05	0	8.73841E-05	8.73841E-05	0	0	0	0	3.75574E-09	3.75574E-09	0.0037557	
397466.283768477.28	397466.28	3768477	0	0	0.000206638	0	0.000103319	0	0.000103319	0.000103319	0	0	0	0	4.44061E-09	4.44061E-09	0.0044406	
397566.283768477.28	397566.28	3768477	0	0	0.000196077	0	9.80384E-05	0	9.80384E-05	9.80384E-05	0	0	0	0	4.21366E-09	4.21366E-09	0.0042137	
397666.283768477.28	397666.28	3768477	0	0	0.000157413	0	7.87067E-05	0	7.87067E-05	7.87067E-05	0	0	0	0	3.38279E-09	3.38279E-09	0.0033828	
397766.283768477.28	397766.28	3768477	0	0	0.000121262	0	6.06311E-05	0	6.06311E-05	6.06311E-05	0	0	0	0	2.6059E-09	2.6059E-09	0.0026059	
397866.283768477.28	397866.28	3768477	0	0	8.75404E-05	0	4.37702E-05	0	4.37702E-05	4.37702E-05	0	0	0	0	1.88123E-09	1.88123E-09	0.0018812	
396166.283768577.28	396166.28	3768577	0	0	9.47247E-06	0	4.73624E-06	0	4.73624E-06	4.73624E-06	0	0	0	0	2.03562E-10	2.03562E-10	0.0002036	
396266.283768577.28	396266.28	3768577	0	0	1.03721E-05	0	5.18605E-06	0	5.18605E-06	5.18605E-06	0	0	0	0	2.22894E-10	2.22894E-10	0.0002229	
396366.283768577.28	396366.28	3768577	0	0	1.21764E-05	0	6.08819E-06	0	6.08819E-06	6.08819E-06	0	0	0	0	2.61668E-10	2.61668E-10	0.0002617	
396466.283768577.28	396466.28	3768577	0	0	1.41974E-05	0	7.09868E-06	0	7.09868E-06	7.09868E-06	0	0	0	0	3.05099E-10	3.05099E-10	0.0003051	
396566.283768577.28	396566.28	3768577	0	0	1.66745E-05	0	8.33724E-06	0	8.33724E-06	8.33724E-06	0	0	0	0	3.58332E-10	3.58332E-10	0.0003583	
396866.283768577.28	396866.28	3768577	0	0	2.96623E-05	0	1.48311E-05	0	1.48311E-05	1.48311E-05	0	0	0	0	6.37437E-10	6.37437E-10	0.0006374	
396966.283768577.28	396966.28	3768577	0	0	3.75018E-05	0	1.87509E-05	0	1.87509E-05	1.87509E-05	0	0	0	0	8.05907E-10	8.05907E-10	0.0008059	
397066.283768577.28	397066.28	3768577	0	0	4.83804E-05	0	2.41902E-05	0	2.41902E-05	2.41902E-05	0	0	0	0	1.03969E-09	1.03969E-09	0.0010397	
397166.283768577.28	397166.28	3768577	0	0	6.47273E-05	0	3.23636E-05	0	3.23636E-05	3.23636E-05	0	0	0	0	1.39098E-09	1.39098E-09	0.001391	
397266.283768577.28	397266.28	3768577	0	0	8.63761E-05	0	4.31881E-05	0	4.31881E-05	4.31881E-05	0	0	0	0	1.85621E-09	1.85621E-09	0.0018562	
397366.283768577.28	397366.28	3768577	0	0	0.000112253	0	5.61267E-05	0	5.61267E-05	5.61267E-05	0	0	0	0	2.41231E-09	2.41231E-09	0.0024123	
397466.283768577.28	397466.28	3768577	0	0	0.000129893	0	6.49465E-05	0	6.49465E-05	6.49465E-05	0	0	0	0	2.79138E-09	2.79138E-09	0.0027914	
397566.283768577.28	397566.28	3768577	0	0	0.000131206	0	6.5603E-05	0	6.5603E-05	6.5603E-05	0	0	0	0	2.81959E-09	2.81959E-09	0.0028196	
397666.283768577.28	397666.28	3768577	0	0	0.000115698	0	5.78491E-05	0	5.78491E-05	5.78491E-05	0	0	0	0	2.48633E-09	2.48633E-09	0.0024863	
397766.283768577.28	397766.28	3768577	0	0	9.28398E-05	0	4.64199E-05	0	4.64199E-05	4.64199E-05	0	0	0	0	1.99511E-09	1.99511E-09	0.0019951	
397866.283768577.28	397866.28	3768577	0	0	7.31187E-05	0	3.65594E-05	0	3.65594E-05	3.65594E-05	0	0	0	0	1.57131E-09	1.57131E-09	0.0015713	
396166.283768677.28	396166.28	3768677	0	0	9.0214E-06	0	4.5107E-06	0	4.5107E-06	4.5107E-06	0	0	0	0	1.93868E-10	1.93868E-10	0.0001939	
396266.283768677.28	396266.28	3768677	0	0	1.01705E-05	0	5.08525E-06	0	5.08525E-06	5.08525E-06	0	0	0	0	2.18562E-10	2.18562E-10	0.0002186	
396366.283768677.28	396366.28	3768677	0	0	1.14935E-05	0	5.74673E-06	0	5.74673E-06	5.74673E-06	0	0	0	0	2.46993E-10	2.46993E-10	0.000247	
396466.283768677.28	396466.28	3768677	0	0	1.31969E-05	0	6.59847E-06	0	6.59847E-06	6.59847E-06	0	0	0	0	2.836E-10	2.836E-10	0.0002836	
396566.283768677.28	396566.28	3768677	0	0	1.5291E-05	0	7.64551E-06	0	7.64551E-06	7.64551E-06	0	0	0	0	3.28601E-10	3.28601E-10	0.0003286	
396666.283768677.28	396666.28	3768677	0	0	1.78941E-05	0	8.94706E-06	0	8.94706E-06	8.94706E-06	0	0	0	0	3.84542E-10	3.84542E-10	0.0003845	
396766.283768677.28	396766.28	3768677	0	0	2.11927E-05	0	1.05964E-05	0	1.05964E-05	1.05964E-05	0	0	0	0	4.55428E-10	4.55428E-10	0.0004554	
396866.283768677.28	396866.28	3768677	0	0	2.56026E-05	0	1.28013E-05	0	1.28013E-05	1.28013E-05	0	0	0	0	5.50196E-10	5.50196E-10	0.0005502	
396966.283768677.28	396966.28	3768677	0	0	3.14665E-05	0	1.57333E-05	0	1.57333E-05	1.57333E-05	0	0	0	0	6.76211E-10	6.76211E-10	0.0006762	
397066.283768677.28	397066.28	3768677	0	0	3.94044E-05	0	1.97022E-05	0	1.97022E-05	1.97022E-05	0	0	0	0	8.46793E-10	8.46793E-10	0.0008468	
397166.283768677.28	397166.28	3768677	0	0	4.95522E-05	0	2.47761E-05	0	2.47761E-05	2.47761E-05	0	0	0	0	1.06487E-09	1.06487E-09	0.0010649	
397366.283768677.28	397366.28	3768677	0	0	7.77151E-05	0	3.88575E-05	0	3.88575E-05	3.88575E-05	0	0	0	0	1.67008E-09	1.67008E-09	0.0016701	
397466.283768677.28	397466.28	3768677	0	0	8.87701E-05	0	4.4385E-05	0	4.4385E-05	4.4385E-05	0	0	0	0	1.90765E-09	1.90765E-09	0.0019077	
397566.283768677.28	397566.28	3768677	0	0	9.1731E-05	0	4.58655E-05	0	4.58655E-05	4.58655E-05	0	0	0	0	1.97128E-09	1.97128E-09	0.0019713	
397666.283768677.28	397666.28	3768677	0	0	8.57033E-05	0	4.28517E-05	0	4.28517E-05	4.28517E-05	0	0	0	0	1.84175E-09	1.84175E-09	0.0018417	
397766.283768677.28	397766.28	3768677	0	0	7.33379E-05	0	3.6669E-05	0	3.6669E-05	3.6669E-05	0	0	0	0	1.57602E-09	1.57602E-09	0.001576	
397866.283768677.28	397866.28	3768677	0	0	6.08415E-05	0	3.04208E-05	0	3.04208E-05	3.04208E-05	0	0	0	0	1.30747E-09	1.30747E-09	0.0013075	
396166.283768777.28	396166.28	3768777	0	0	8.61569E-06	0	4.30785E-06	0	4.30785E-06	4.30785E-06	0	0	0	0	1.8515E-10	1.8515E-10	0.0001851	
396266.283768777.28	396266.28	3768777	0	0	9.59091E-06	0	4.79545E-06	0	4.79545E-06	4.79545E-06	0	0	0	0	2.06107E-10	2.06107E-10	0.0002061	
396366.283768777.28	396366.28	3768777	0	0	1.08458E-05	0	5.42292E-06	0	5.42292E-06	5.42292E-06	0	0	0	0	2.33075E-10	2.33075E-10	0.0002331	
396466.283768777.28	396466.28	3768777	0	0	1.2257E-05	0	6.1285E-06	0	6.1285E-06	6.1285E-06	0	0	0	0	2.63401E-10	2.63401E-10	0.0002634	
396566.283768777.28	396566.28	3768777	0	0	1.39277E-05	0	6.96387E-06	0	6.96387E-06	6.96387E-06	0	0	0	0	2.99305E-10	2.99305E-10	0.0002993	
396666.283768777.28	396666.28	3768777	0	0	1.60722E-05	0	8.0361E-06	0	8.0361E-06	8.0361E-06	0	0	0	0	3.45389E-10	3.45389E-10	0.0003454	
396766.283768777.28	396766.28	3768777	0	0	1.88114E-05	0	9.40569E-06	0	9.40569E-06	9.40569E-06	0	0	0	0	4.04253E-10	4.04253E-10	0.0004043	
396866.283768777.28	396866.28	3768777	0	0	2.23091E-05	0	1.11545E-05	0	1.11545E-05	1.11545E-05	0	0	0	0	4.79418E-10	4.79418E-10	0.0004794	
396966.283768777.28	396966.28	3768777	0	0	2.67316E-05	0	1.33658E-05	0	1.33658E-05	1.33658E-05	0	0	0	0	5.74457E-10	5.74457E-10	0.0005745	
397066.283768777.28	397066.28	3768777	0	0	3.23561E-05	0	1.6178E-05	0	1.6178E-05	1.6178E-05	0	0	0	0	6.95327E-10	6.95327E-10	0.0006953	

Garvey Reservoir Rehab - Mitigated Proposed Pump Station			Demolition - 2025	Demolition - 2026	Site Preparation - 203	Site Preparation - 202	Grading - 2034	Grading - 2026	Infrastructure - 203	Infrastructure - 203	Paving - 2025	Architectural Coating - 2	Child Risk					
Unique Identifier	X (UTM)	Y (UTM)	2025	1900	2034	1900	2034	1900	2034	2035	1900	1900	3rd Trimester	0<2	2<16	Total	per million	
397166.283768777.28	397166.28	3768777	0	0	3.90969E-05	0	1.95485E-05	0	1.95485E-05	1.95485E-05	0	0	0	0	8.40186E-10	8.40186E-10	0.0008402	
397266.283768777.28	397266.28	3768777	0	0	4.77681E-05	0	2.3884E-05	0	2.3884E-05	2.3884E-05	0	0	0	0	1.02653E-09	1.02653E-09	0.0010265	
397366.283768777.28	397366.28	3768777	0	0	5.64594E-05	0	2.82297E-05	0	2.82297E-05	2.82297E-05	0	0	0	0	1.2133E-09	1.2133E-09	0.0012133	
397466.283768777.28	397466.28	3768777	0	0	6.3107E-05	0	3.15535E-05	0	3.15535E-05	3.15535E-05	0	0	0	0	1.35616E-09	1.35616E-09	0.0013562	
397566.283768777.28	397566.28	3768777	0	0	6.58285E-05	0	3.29143E-05	0	3.29143E-05	3.29143E-05	0	0	0	0	1.41464E-09	1.41464E-09	0.0014146	
397666.283768777.28	397666.28	3768777	0	0	6.37244E-05	0	3.18622E-05	0	3.18622E-05	3.18622E-05	0	0	0	0	1.36943E-09	1.36943E-09	0.0013694	
397766.283768777.28	397766.28	3768777	0	0	5.76311E-05	0	2.88156E-05	0	2.88156E-05	2.88156E-05	0	0	0	0	1.23848E-09	1.23848E-09	0.0012385	
397866.283768777.28	397866.28	3768777	0	0	5.01091E-05	0	2.50545E-05	0	2.50545E-05	2.50545E-05	0	0	0	0	1.07684E-09	1.07684E-09	0.0010768	
396166.283768877.28	396166.28	3768877	0	0	8.12682E-06	0	4.06341E-06	0	4.06341E-06	4.06341E-06	0	0	0	0	1.74644E-10	1.74644E-10	0.0001746	
396266.283768877.28	396266.28	3768877	0	0	9.04912E-06	0	4.52456E-06	0	4.52456E-06	4.52456E-06	0	0	0	0	1.94464E-10	1.94464E-10	0.0001945	
396366.283768877.28	396366.28	3768877	0	0	1.00445E-05	0	5.02225E-06	0	5.02225E-06	5.02225E-06	0	0	0	0	2.15855E-10	2.15855E-10	0.0002159	
396466.283768877.28	396466.28	3768877	0	0	1.13775E-05	0	5.68877E-06	0	5.68877E-06	5.68877E-06	0	0	0	0	2.44502E-10	2.44502E-10	0.0002445	
396566.283768877.28	396566.28	3768877	0	0	1.28265E-05	0	6.41326E-06	0	6.41326E-06	6.41326E-06	0	0	0	0	2.7564E-10	2.7564E-10	0.0002756	
396666.283768877.28	396666.28	3768877	0	0	1.45602E-05	0	7.28012E-06	0	7.28012E-06	7.28012E-06	0	0	0	0	3.12897E-10	3.12897E-10	0.0003129	
396766.283768877.28	396766.28	3768877	0	0	1.68383E-05	0	8.41913E-06	0	8.41913E-06	8.41913E-06	0	0	0	0	3.61851E-10	3.61851E-10	0.0003619	
396866.283768877.28	396866.28	3768877	0	0	1.99101E-05	0	9.95504E-06	0	9.95504E-06	9.95504E-06	0	0	0	0	4.27864E-10	4.27864E-10	0.0004279	
396966.283768877.28	396966.28	3768877	0	0	2.32994E-05	0	1.16497E-05	0	1.16497E-05	1.16497E-05	0	0	0	0	5.007E-10	5.007E-10	0.0005007	
397066.283768877.28	397066.28	3768877	0	0	2.71348E-05	0	1.35674E-05	0	1.35674E-05	1.35674E-05	0	0	0	0	5.83121E-10	5.83121E-10	0.0005831	
397166.283768877.28	397166.28	3768877	0	0	3.18219E-05	0	1.59109E-05	0	1.59109E-05	1.59109E-05	0	0	0	0	6.83846E-10	6.83846E-10	0.0006838	
397266.283768877.28	397266.28	3768877	0	0	3.74892E-05	0	1.87446E-05	0	1.87446E-05	1.87446E-05	0	0	0	0	8.05637E-10	8.05637E-10	0.0008056	
397366.283768877.28	397366.28	3768877	0	0	4.28718E-05	0	2.14359E-05	0	2.14359E-05	2.14359E-05	0	0	0	0	9.21308E-10	9.21308E-10	0.0009213	
397466.283768877.28	397466.28	3768877	0	0	4.74228E-05	0	2.37114E-05	0	2.37114E-05	2.37114E-05	0	0	0	0	1.01911E-09	1.01911E-09	0.0010191	
397566.283768877.28	397566.28	3768877	0	0	4.97916E-05	0	2.48958E-05	0	2.48958E-05	2.48958E-05	0	0	0	0	1.07001E-09	1.07001E-09	0.00107	
397666.283768877.28	397666.28	3768877	0	0	4.88844E-05	0	2.44422E-05	0	2.44422E-05	2.44422E-05	0	0	0	0	1.05052E-09	1.05052E-09	0.0010505	
397766.283768877.28	397766.28	3768877	0	0	4.5742E-05	0	2.2871E-05	0	2.2871E-05	2.2871E-05	0	0	0	0	9.82988E-10	9.82988E-10	0.000983	
397866.283768877.28	397866.28	3768877	0	0	4.13775E-05	0	2.06887E-05	0	2.06887E-05	2.06887E-05	0	0	0	0	8.89195E-10	8.89195E-10	0.0008892	
3964253767739	396425	3767739	0	0	1.57093E-05	0	7.85467E-06	0	7.85467E-06	7.85467E-06	0	0	0	0	3.37591E-10	3.37591E-10	0.0003376	
3964753767739	396475	3767739	0	0	1.71457E-05	0	8.57285E-06	0	8.57285E-06	8.57285E-06	0	0	0	0	3.68458E-10	3.68458E-10	0.0003685	
3965253767739	396525	3767739	0	0	1.86173E-05	0	9.30867E-06	0	9.30867E-06	9.30867E-06	0	0	0	0	4.00084E-10	4.00084E-10	0.0004001	
3965753767739	396575	3767739	0	0	2.05325E-05	0	1.02663E-05	0	1.02663E-05	1.02663E-05	0	0	0	0	4.4124E-10	4.4124E-10	0.0004412	
3966253767739	396625	3767739	0	0	2.22158E-05	0	1.11079E-05	0	1.11079E-05	1.11079E-05	0	0	0	0	4.77414E-10	4.77414E-10	0.0004774	
3966753767739	396675	3767739	0	0	2.46803E-05	0	1.23402E-05	0	1.23402E-05	1.23402E-05	0	0	0	0	5.30376E-10	5.30376E-10	0.0005304	
3967253767739	396725	3767739	0	0	2.82788E-05	0	1.41394E-05	0	1.41394E-05	1.41394E-05	0	0	0	0	6.07707E-10	6.07707E-10	0.0006077	
3967753767739	396775	3767739	0	0	3.16404E-05	0	1.58202E-05	0	1.58202E-05	1.58202E-05	0	0	0	0	6.79947E-10	6.79947E-10	0.0006799	
3968253767739	396825	3767739	0	0	3.65014E-05	0	1.82507E-05	0	1.82507E-05	1.82507E-05	0	0	0	0	7.84409E-10	7.84409E-10	0.0007844	
3968753767739	396875	3767739	0	0	4.23552E-05	0	2.11776E-05	0	2.11776E-05	2.11776E-05	0	0	0	0	9.10206E-10	9.10206E-10	0.0009102	
3969253767739	396925	3767739	0	0	4.88718E-05	0	2.44359E-05	0	2.44359E-05	2.44359E-05	0	0	0	0	1.05025E-09	1.05025E-09	0.0010502	
3969753767739	396975	3767739	0	0	5.64997E-05	0	2.82498E-05	0	2.82498E-05	2.82498E-05	0	0	0	0	1.21417E-09	1.21417E-09	0.0012142	
3970253767739	397025	3767739	0	0	6.51305E-05	0	3.25652E-05	0	3.25652E-05	3.25652E-05	0	0	0	0	1.39964E-09	1.39964E-09	0.0013996	
3970753767739	397075	3767739	0	0	7.44644E-05	0	3.72322E-05	0	3.72322E-05	3.72322E-05	0	0	0	0	1.60023E-09	1.60023E-09	0.0016002	
3971253767739	397125	3767739	0	0	8.45089E-05	0	4.22544E-05	0	4.22544E-05	4.22544E-05	0	0	0	0	1.81608E-09	1.81608E-09	0.0018161	
3971753767739	397175	3767739	0	0	9.53093E-05	0	4.76547E-05	0	4.76547E-05	4.76547E-05	0	0	0	0	2.04818E-09	2.04818E-09	0.0020482	
3972253767739	397225	3767739	0	0	0.000105545	0	5.27727E-05	0	5.27727E-05	5.27727E-05	0	0	0	0	2.26815E-09	2.26815E-09	0.0022682	
3972753767739	397275	3767739	0	0	0.000115416	0	5.7708E-05	0	5.7708E-05	5.7708E-05	0	0	0	0	2.48027E-09	2.48027E-09	0.0024803	
3973253767739	397325	3767739	0	0	0.000119299	0	5.96496E-05	0	5.96496E-05	5.96496E-05	0	0	0	0	2.56372E-09	2.56372E-09	0.0025637	
3973753767739	397375	3767739	0	0	0.000119022	0	5.9511E-05	0	5.9511E-05	5.9511E-05	0	0	0	0	2.55776E-09	2.55776E-09	0.0025578	
3974253767739	397425	3767739	0	0	0.000116391	0	5.81956E-05	0	5.81956E-05	5.81956E-05	0	0	0	0	2.50123E-09	2.50123E-09	0.0025012	
3974753767739	397475	3767739	0	0	0.000113821	0	5.69104E-05	0	5.69104E-05	5.69104E-05	0	0	0	0	2.44599E-09	2.44599E-09	0.002446	
3975253767739	397525	3767739	0	0	0.000104999	0	5.24993E-05	0	5.24993E-05	5.24993E-05	0	0	0	0	2.2564E-09	2.2564E-09	0.0022564	
3964253767789	396425	3767789	0	0	1.59462E-05	0	7.9731E-06	0	7.9731E-06	7.9731E-06	0	0	0	0	3.42681E-10	3.42681E-10	0.0003427	
3964753767789	396475	3767789	0	0	1.73448E-05	0	8.67239E-06	0	8.67239E-06	8.67239E-06	0	0	0	0	3.72736E-10	3.72736E-10	0.0003727	
3965253767789	396525	3767789	0	0	1.88693E-05	0	9.43467E-06	0	9.43467E-06	9.43467E-06	0	0	0	0	4.05499E-10	4.05499E-10	0.0004055	
3965753767789	396575	3767789	0	0	2.06232E-05	0	1.03116E-05	0	1.03116E-05	1.03116E-05	0	0	0	0	4.4319E-10	4.4319E-10	0.0004432	
3966253767789	396625	3767789	0	0	2.28534E-05	0	1.14267E-05	0	1.14267E-05	1.14267E-05	0	0	0	0	4.91115E-10	4.91115E-10	0.0004911	
3966753767789	396675	3767789	0	0	2.56808E-05	0	1.28404E-05	0	1.28404E-05	1.28404E-05	0	0	0	0	5.51875E-10	5.51875E-10	0.0005519	
3967253767789	396725	3767789	0	0	2.9501E-05	0	1.47505E-05	0	1.47505E-05	1.47505E-05	0	0	0	0	6.33971E-10	6.33971E-10	0.000634	
3967753767789	396775	3767789	0	0	3.35682E-05	0	1.67841E-05	0	1.67841E-05	1.67841E-05	0	0	0	0	7.21374E-10	7.21374E-10	0.0007214	
3968253767789	396825	3767789	0	0	3.89105E-05	0	1.94552E-05	0	1.94552E-05	1.94552E-05	0	0	0	0	8.36179E-10	8.36179E-10	0.0008362	
3968753767789	396875	3767789	0	0	4.53338E-05	0	2.26669E-05	0	2.26669E-05	2.26669E-05	0	0	0	0	9.74216E-10	9.74216E-10	0.0009742	
3969253767789	396925	3767789	0	0	5.307E-05	0	2.6535E-05	0	2.6535E-05	2.6535E-05	0	0	0	0	1.14047E-09	1.14047E-09	0.0011405	
3969753767789	396975	3767789	0	0	6.27517E-05	0	3.13758E-05	0	3.13758E-05	3.13758E-05	0	0	0	0	1.34852E-09	1.34852E-09	0.0013485	
3970253767789	397025	3767789	0	0	7.41998E-05	0	3.70999E-05	0	3.70999E-05	3.70999E-05	0	0	0	0	1.59454E-09	1.59454E-09	0.0015945	
3970753767789	397075	3767789	0	0	8.74295E-05	0	4.37147E-05	0	4.37147E-05	4.37147E-05	0	0	0	0	1.87884E-09	1.87884E-09	0.0018788	
3971253767789	397125	3767789	0	0	0.000102486	0	5.12431E-05	0	5.12431E-05	5.12431E-05	0	0	0	0	2.20241E-09	2.20241E-09	0.0022024	
3971753767789	397175	3767789	0	0	0.000119415	0	5.97076E-05	0	5.97076E-05	5.97076E-05	0	0	0	0	2.56621E-09	2.56621E-09	0.0025662	
3972253767789	397225	3767789	0	0	0.000136795	0	6.83976E-05	0	6.83976E-05	6.83976E-05	0	0	0	0	2.9397E-09	2.9397E-09	0.0029397	
3972753767789	397275	3767789	0	0	0.000155407	0	7.77037E-05	0	7.77037E-05	7.77037E-05	0	0	0	0	3.33968E-09	3.33968E-09	0.0033397	
3973253767789	397325	3767789	0	0	0.000166588	0	8.32942E-05	0	8.32942E-05	8.32942E-05	0	0	0	0	3.57996E-09	3.57996E-09	0.00358	
3973753767789	397375	3767789	0	0	0.000167886	0	8.39431E-05	0	8.39431E-05	8.39431E-05	0	0	0	0	3.60785E-09	3.60785E-09	0.0036078	
3974253767789	397425	3767789	0	0	0.000162798	0	8.13992E-05	0	8.13992E-05	8.13992E-05	0	0	0	0	3.49851E-09	3.49851E-09	0.0034985	
3974753767789	397475	3767789	0	0	0.00015735	0	7.86752E-05	0	7.86752E-05	7.86752E-05	0	0	0	0	3.38143E-09	3.38143E-09	0.0033814	
3975253767789	397525	3767789	0	0	0.000141286	0	7.06429E-05	0	7.06429E-05	7.06429E-05	0	0	0	0	3.03621E-09	3.03621E-09	0.0030362	
3964253767839	396425	3767839	0	0	1.61377E-05	0	8.06886E-06	0	8.06886E-06	8.06886E-06	0	0	0	0	3.46797E-10	3.46797E-10	0.0003468	
3964753767839	396475	3767839	0	0	1.76295E-05	0	8.81477E-06	0	8.81477E-06	8.81477E-06	0	0	0	0	3.78856E-10	3.78856E-10	0.0003789	
3965253767839	396525	3767839	0	0	1.90533E-05	0	9.52665E-06	0	9.52665E-06	9.52665E-06	0	0	0	0	4.09452E-10	4.09452E-10	0.0004095	
3965753767839	396575	3767839	0	0	2.10289E-05	0	1.05145E-05	0	1.05145E-05	1.05145E-05	0	0	0	0	4.51908E-10	4.51908E-10	0.0004519	
3966253767839	396625	3767839	0	0	2.34204E-05	0	1.17102E-05	0	1.17102E-05	1.17102E-05	0	0	0	0	5.033E-10	5.033E-10	0.0005033	

Garvey Reservoir Rehab - Mitigated Proposed Pump Station			Demolition - 2025	Demolition - 2026	Site Preparation - 203	Site Preparation - 202	Grading - 2034	Grading - 2026	Infrastructure - 203	Infrastructure - 203	Paving - 2025	Architectural Coating - 2	Child Risk				
Unique Identifier	X (UTM)	Y (UTM)	2025	1900	2034	1900	2034	1900	2034	2035	1900	1900	3rd Trimester	0<2	2<16	Total	per million
3966753767839	396675	3767839	0	0	2.69256E-05	0	1.34628E-05	0	1.34628E-05	1.34628E-05	0	0	0	0	5.78627E-10	5.78627E-10	0.0005786
3967253767839	396725	3767839	0	0	3.06929E-05	0	1.53465E-05	0	1.53465E-05	1.53465E-05	0	0	0	0	6.59586E-10	6.59586E-10	0.0006596
3967753767839	396775	3767839	0	0	3.52288E-05	0	1.76144E-05	0	1.76144E-05	1.76144E-05	0	0	0	0	7.57061E-10	7.57061E-10	0.0007571
3968253767839	396825	3767839	0	0	4.09264E-05	0	2.04632E-05	0	2.04632E-05	2.04632E-05	0	0	0	0	8.79502E-10	8.79502E-10	0.0008795
3968753767839	396875	3767839	0	0	4.80856E-05	0	2.40428E-05	0	2.40428E-05	2.40428E-05	0	0	0	0	1.03335E-09	1.03335E-09	0.0010334
3969253767839	396925	3767839	0	0	5.70641E-05	0	2.85321E-05	0	2.85321E-05	2.85321E-05	0	0	0	0	1.2263E-09	1.2263E-09	0.0012263
3969753767839	396975	3767839	0	0	6.8739E-05	0	3.43695E-05	0	3.43695E-05	3.43695E-05	0	0	0	0	1.47719E-09	1.47719E-09	0.0014772
3970253767839	397025	3767839	0	0	8.34379E-05	0	4.17189E-05	0	4.17189E-05	4.17189E-05	0	0	0	0	1.79307E-09	1.79307E-09	0.0017931
3970753767839	397075	3767839	0	0	0.000101171	0	5.05854E-05	0	5.05854E-05	5.05854E-05	0	0	0	0	2.17414E-09	2.17414E-09	0.0021741
3971253767839	397125	3767839	0	0	0.000122673	0	6.13367E-05	0	6.13367E-05	6.13367E-05	0	0	0	0	2.63623E-09	2.63623E-09	0.0026362
3971753767839	397175	3767839	0	0	0.000151182	0	7.55908E-05	0	7.55908E-05	7.55908E-05	0	0	0	0	3.24887E-09	3.24887E-09	0.0032489
3972253767839	397225	3767839	0	0	0.000185269	0	9.26344E-05	0	9.26344E-05	9.26344E-05	0	0	0	0	3.9814E-09	3.9814E-09	0.0039814
3972753767839	397275	3767839	0	0	0.000219102	0	0.000109551	0	0.000109551	0.000109551	0	0	0	0	4.70846E-09	4.70846E-09	0.0047085
3973253767839	397325	3767839	0	0	0.00024604	0	0.00012302	0	0.00012302	0.00012302	0	0	0	0	5.28735E-09	5.28735E-09	0.0052874
3973753767839	397375	3767839	0	0	0.000254986	0	0.000127493	0	0.000127493	0.000127493	0	0	0	0	5.4796E-09	5.4796E-09	0.0054796
3974753767839	397475	3767839	0	0	0.000224582	0	0.000112291	0	0.000112291	0.000112291	0	0	0	0	4.82624E-09	4.82624E-09	0.0048262
3975253767839	397525	3767839	0	0	0.000198708	0	9.93538E-05	0	9.93538E-05	9.93538E-05	0	0	0	0	4.27019E-09	4.27019E-09	0.0042702
3964253767889	396425	3767889	0	0	1.62612E-05	0	8.1306E-06	0	8.1306E-06	8.1306E-06	0	0	0	0	3.4945E-10	3.4945E-10	0.0003495
3964753767889	396475	3767889	0	0	1.75439E-05	0	8.77193E-06	0	8.77193E-06	8.77193E-06	0	0	0	0	3.77014E-10	3.77014E-10	0.000377
3965253767889	396525	3767889	0	0	1.92826E-05	0	9.64131E-06	0	9.64131E-06	9.64131E-06	0	0	0	0	4.1438E-10	4.1438E-10	0.0004144
3965753767889	396575	3767889	0	0	2.14976E-05	0	1.07488E-05	0	1.07488E-05	1.07488E-05	0	0	0	0	4.61981E-10	4.61981E-10	0.000462
3974753767889	397475	3767889	0	0	0.000363426	0	0.000181713	0	0.000181713	0.000181713	0	0	0	0	7.80997E-09	7.80997E-09	0.00781
3975253767889	397525	3767889	0	0	0.000293964	0	0.000146982	0	0.000146982	0.000146982	0	0	0	0	6.31724E-09	6.31724E-09	0.0063172
3964253767939	396425	3767939	0	0	1.63368E-05	0	8.1684E-06	0	8.1684E-06	8.1684E-06	0	0	0	0	3.51075E-10	3.51075E-10	0.0003511
3964753767939	396475	3767939	0	0	1.76522E-05	0	8.82611E-06	0	8.82611E-06	8.82611E-06	0	0	0	0	3.79343E-10	3.79343E-10	0.0003793
3965253767939	396525	3767939	0	0	1.94893E-05	0	9.74463E-06	0	9.74463E-06	9.74463E-06	0	0	0	0	4.18821E-10	4.18821E-10	0.0004188
3974753767939	397475	3767939	0	0	0.000644655	0	0.000322327	0	0.000322327	0.000322327	0	0	0	0	1.38535E-08	1.38535E-08	0.0138535
3975253767939	397525	3767939	0	0	0.000455886	0	0.000227943	0	0.000227943	0.000227943	0	0	0	0	9.7969E-09	9.7969E-09	0.0097969
3964253767989	396425	3767989	0	0	1.62158E-05	0	8.10792E-06	0	8.10792E-06	8.10792E-06	0	0	0	0	3.48476E-10	3.48476E-10	0.0003485
3964753767989	396475	3767989	0	0	1.77303E-05	0	8.86516E-06	0	8.86516E-06	8.86516E-06	0	0	0	0	3.81022E-10	3.81022E-10	0.000381
3974753767989	397475	3767989	0	0	0.001214175	0	0.000607087	0	0.000607087	0.000607087	0	0	0	0	2.60924E-08	2.60924E-08	0.0260924
3975253767989	397525	3767989	0	0	0.000687519	0	0.000343759	0	0.000343759	0.000343759	0	0	0	0	1.47747E-08	1.47747E-08	0.0147747
3964253768039	396425	3768039	0	0	1.61982E-05	0	8.0991E-06	0	8.0991E-06	8.0991E-06	0	0	0	0	3.48097E-10	3.48097E-10	0.0003481
3964753768039	396475	3768039	0	0	1.77807E-05	0	8.89036E-06	0	8.89036E-06	8.89036E-06	0	0	0	0	3.82105E-10	3.82105E-10	0.0003821
3974753768039	397475	3768039	0	0	0.002949	0	0.0014745	0	0.0014745	0.0014745	0	0	0	0	6.33735E-08	6.33735E-08	0.0633735
3975253768039	397525	3768039	0	0	0.001135137	0	0.000567568	0	0.000567568	0.000567568	0	0	0	0	2.43939E-08	2.43939E-08	0.0243939
3964253768089	396425	3768089	0	0	1.6168E-05	0	8.08398E-06	0	8.08398E-06	8.08398E-06	0	0	0	0	3.47447E-10	3.47447E-10	0.0003474
3964753768089	396475	3768089	0	0	1.77757E-05	0	8.88784E-06	0	8.88784E-06	8.88784E-06	0	0	0	0	3.81996E-10	3.81996E-10	0.000382
3974753768089	397475	3768089	0	0	0.004842922	0	0.002421461	0	0.002421461	0.002421461	0	0	0	0	1.04074E-07	1.04074E-07	0.1040736
3975253768089	397525	3768089	0	0	0.00146441	0	0.000732205	0	0.000732205	0.000732205	0	0	0	0	3.14699E-08	3.14699E-08	0.0314699
3964253768139	396425	3768139	0	0	1.62234E-05	0	8.1117E-06	0	8.1117E-06	8.1117E-06	0	0	0	0	3.48638E-10	3.48638E-10	0.0003486
3964753768139	396475	3768139	0	0	1.76421E-05	0	8.82107E-06	0	8.82107E-06	8.82107E-06	0	0	0	0	3.79126E-10	3.79126E-10	0.0003791
3974253768139	397425	3768139	0	0	0.007041004	0	0.003520502	0	0.003520502	0.003520502	0	0	0	0	1.5131E-07	1.5131E-07	0.15131
3974753768139	397475	3768139	0	0	0.00334027	0	0.001670135	0	0.001670135	0.001670135	0	0	0	0	7.17818E-08	7.17818E-08	0.0717818
3975253768139	397525	3768139	0	0	0.001444286	0	0.000722143	0	0.000722143	0.000722143	0	0	0	0	3.10375E-08	3.10375E-08	0.0310375
3964253768189	396425	3768189	0	0	1.60344E-05	0	8.0172E-06	0	8.0172E-06	8.0172E-06	0	0	0	0	3.44577E-10	3.44577E-10	0.0003446
3964753768189	396475	3768189	0	0	1.74481E-05	0	8.72405E-06	0	8.72405E-06	8.72405E-06	0	0	0	0	3.74957E-10	3.74957E-10	0.000375
3973753768189	397375	3768189	0	0	0.001887968	0	0.000943984	0	0.000943984	0.000943984	0	0	0	0	4.05721E-08	4.05721E-08	0.0405721
3974253768189	397425	3768189	0	0	0.002186886	0	0.001093443	0	0.001093443	0.001093443	0	0	0	0	4.69958E-08	4.69958E-08	0.0469958
3974753768189	397475	3768189	0	0	0.001863088	0	0.000931544	0	0.000931544	0.000931544	0	0	0	0	4.00374E-08	4.00374E-08	0.0400374
3975253768189	397525	3768189	0	0	0.001157831	0	0.000578916	0	0.000578916	0.000578916	0	0	0	0	2.48816E-08	2.48816E-08	0.0248816
3964253768239	396425	3768239	0	0	1.57975E-05	0	7.89877E-06	0	7.89877E-06	7.89877E-06	0	0	0	0	3.39486E-10	3.39486E-10	0.0003395
3964753768239	396475	3768239	0	0	1.71911E-05	0	8.59553E-06	0	8.59553E-06	8.59553E-06	0	0	0	0	3.69433E-10	3.69433E-10	0.0003694
3973753768239	397375	3768239	0	0	0.001005619	0	0.00050281	0	0.00050281	0.00050281	0	0	0	0	2.16106E-08	2.16106E-08	0.0216106
3974253768239	397425	3768239	0	0	0.001046629	0	0.000523314	0	0.000523314	0.000523314	0	0	0	0	2.24919E-08	2.24919E-08	0.0224919
3974753768239	397475	3768239	0	0	0.000971582	0	0.000485791	0	0.000485791	0.000485791	0	0	0	0	2.08791E-08	2.08791E-08	0.0208791
3975253768239	397525	3768239	0	0	0.000760429	0	0.000380214	0	0.000380214	0.000380214	0	0	0	0	1.63415E-08	1.63415E-08	0.0163415
3964253768289	396425	3768289	0	0	1.54926E-05	0	7.74631E-06	0	7.74631E-06	7.74631E-06	0	0	0	0	3.32934E-10	3.32934E-10	0.0003329
3964753768289	396475	3768289	0	0	1.68836E-05	0	8.44181E-06	0	8.44181E-06	8.44181E-06	0	0	0	0	3.62826E-10	3.62826E-10	0.0003628
3973253768289	397325	3768289	0	0	0.000458433	0	0.000229217	0	0.000229217	0.000229217	0	0	0	0	9.85165E-09	9.85165E-09	0.0098517
3973753768289	397375	3768289	0	0	0.000608312	0	0.000304156	0	0.000304156	0.000304156	0	0	0	0	1.30725E-08	1.30725E-08	0.0130725
3974253768289	397425	3768289	0	0	0.000718474	0	0.000359237	0	0.000359237	0.000359237	0	0	0	0	1.54399E-08	1.54399E-08	0.0154399
3974753768289	397475	3768289	0	0	0.000708896	0	0.000354448	0	0.000354448	0.000354448	0	0	0	0	1.5234E-08	1.5234E-08	0.015234
3975253768289	397525	3768289	0	0	0.00059607	0	0.000298035	0	0.000298035	0.000298035	0	0	0	0	1.28094E-08	1.28094E-08	0.0128094
3964253768339	396425	3768339	0	0	1.52129E-05	0	7.60645E-06	0	7.60645E-06	7.60645E-06	0	0	0	0	3.26923E-10	3.26923E-10	0.0003269
3964753768339	396475	3768339	0	0	1.65359E-05	0	8.26794E-06	0	8.26794E-06	8.26794E-06	0	0	0	0	3.55353E-10	3.55353E-10	0.0003554
3965253768339	396525	3768339	0	0	1.81663E-05	0	9.08314E-06	0	9.08314E-06	9.08314E-06	0	0	0	0	3.9039E-10	3.9039E-10	0.0003904
3972753768339	397275	3768339	0	0	0.000248749	0	0.000124374	0	0.000124374	0.000124374	0	0	0	0	5.34557E-09	5.34557E-09	0.0053456
3973253768339	397325	3768339	0	0	0.000325725	0	0.000162863	0	0.000162863	0.000162863	0	0	0	0	6.99978E-09	6.99978E-09	0.0069998
3973753768339	397375	3768339	0	0	0.000406485	0	0.000203242	0	0.000203242	0.000203242	0	0	0	0	8.73529E-09	8.73529E-09	0.0087353
3974253768339	397425	3768339	0	0	0.000468954	0	0.000234477	0	0.000234477	0.000234477	0	0	0	0	1.00777E-08	1.00777E-08	0.0100777
3974753768339	397475	3768339	0	0	0.000482128	0	0.000241064	0	0.000241064	0.000241064	0	0	0	0	1.03609E-08	1.03609E-08	0.0103609
3975253768339	397525	3768339	0	0	0.000444848	0	0.000222424	0	0.000222424	0.000222424	0	0	0	0	9.55971E-09	9.55971E-09	0.0095597
3964253768389	396425	3768389	0	0	1.48576E-05	0	7.4288E-06	0	7.4288E-06	7.4288E-06	0	0	0	0	3.19287E-10	3.19287E-10	0.0003193
3964753768389	396475	3768389	0	0	1.61352E-05	0	8.0676E-06	0	8.0676E-06	8.0676E-06	0	0	0	0	3.46743E-10	3.46743E-10	0.0003467
3965253768389	396525	3768389	0	0	1.76673E-05	0	8.83367E-06	0	8.83367E-06	8.83367E-06	0	0	0	0	3.79668E-10	3.79668E-10	0.0003797
3972253768389	397225	3768389	0	0	0.000153215	0	7.66076E-05	0	7.66076E-05	7.66076E-05	0	0	0	0	3.29257E-09	3.29257E-09	0.0032926

Garvey Reservoir Rehab - Mitigated Proposed Pump Station			Demolition - 2025	Demolition - 2026	Site Preparation - 203	Site Preparation - 202	Grading - 2034	Grading - 2026	Infrastructure - 203	Infrastructure - 203	Paving - 2025	Architectural Coating - 2	Child Risk					
Unique Identifier	X (UTM)	Y (UTM)	2025	1900	2034	1900	2034	1900	2034	2035	1900	1900	3rd Trimester	0<2	2<16	Total	per million	
3972753768389	397275	3768389	0	0	0.000193595	0	9.67974E-05	0	9.67974E-05	9.67974E-05	0	0	0	0	4.16032E-09	4.16032E-09	0.0041603	
3973253768389	397325	3768389	0	0	0.000241844	0	0.000120922	0	0.000120922	0.000120922	0	0	0	0	5.19719E-09	5.19719E-09	0.0051972	
3973753768389	397375	3768389	0	0	0.000290282	0	0.000145141	0	0.000145141	0.000145141	0	0	0	0	6.23812E-09	6.23812E-09	0.0062381	
3974253768389	397425	3768389	0	0	0.000326786	0	0.000163393	0	0.000163393	0.000163393	0	0	0	0	7.02258E-09	7.02258E-09	0.0070226	
3974753768389	397475	3768389	0	0	0.000339741	0	0.000169871	0	0.000169871	0.000169871	0	0	0	0	7.30098E-09	7.30098E-09	0.007301	
3975253768389	397525	3768389	0	0	0.000324647	0	0.000162323	0	0.000162323	0.000162323	0	0	0	0	6.97661E-09	6.97661E-09	0.0069766	
3964253768439	396425	3768439	0	0	1.4535E-05	0	7.26752E-06	0	7.26752E-06	7.26752E-06	0	0	0	0	3.12355E-10	3.12355E-10	0.0003124	
3964753768439	396475	3768439	0	0	1.57068E-05	0	7.85341E-06	0	7.85341E-06	7.85341E-06	0	0	0	0	3.37537E-10	3.37537E-10	0.0003375	
3965253768439	396525	3768439	0	0	1.71306E-05	0	8.56529E-06	0	8.56529E-06	8.56529E-06	0	0	0	0	3.68133E-10	3.68133E-10	0.0003681	
3971753768439	397175	3768439	0	0	0.000100485	0	5.02427E-05	0	5.02427E-05	5.02427E-05	0	0	0	0	2.15941E-09	2.15941E-09	0.0021594	
3972253768439	397225	3768439	0	0	0.000125964	0	6.29822E-05	0	6.29822E-05	6.29822E-05	0	0	0	0	2.70695E-09	2.70695E-09	0.002707	
3972753768439	397275	3768439	0	0	0.000153825	0	7.69125E-05	0	7.69125E-05	7.69125E-05	0	0	0	0	3.30567E-09	3.30567E-09	0.0033057	
3973253768439	397325	3768439	0	0	0.000186186	0	9.3093E-05	0	9.3093E-05	9.3093E-05	0	0	0	0	4.00111E-09	4.00111E-09	0.0040011	
3973753768439	397375	3768439	0	0	0.000218388	0	0.000109194	0	0.000109194	0.000109194	0	0	0	0	4.69313E-09	4.69313E-09	0.0046931	
3974253768439	397425	3768439	0	0	0.000243933	0	0.000121967	0	0.000121967	0.000121967	0	0	0	0	5.24208E-09	5.24208E-09	0.0052421	
3974753768439	397475	3768439	0	0	0.000253406	0	0.000126703	0	0.000126703	0.000126703	0	0	0	0	5.44564E-09	5.44564E-09	0.0054456	
3975253768439	397525	3768439	0	0	0.000247343	0	0.000123671	0	0.000123671	0.000123671	0	0	0	0	5.31535E-09	5.31535E-09	0.0053154	
3964253768489	396425	3768489	0	0	1.41218E-05	0	7.06088E-06	0	7.06088E-06	7.06088E-06	0	0	0	0	3.03474E-10	3.03474E-10	0.0003035	
3964753768489	396475	3768489	0	0	1.52356E-05	0	7.61779E-06	0	7.61779E-06	7.61779E-06	0	0	0	0	3.2741E-10	3.2741E-10	0.0003274	
3965253768489	396525	3768489	0	0	1.65787E-05	0	8.28936E-06	0	8.28936E-06	8.28936E-06	0	0	0	0	3.56274E-10	3.56274E-10	0.0003563	
3970753768489	397075	3768489	0	0	6.01486E-05	0	3.00743E-05	0	3.00743E-05	3.00743E-05	0	0	0	0	1.29258E-09	1.29258E-09	0.0012926	
3971253768489	397125	3768489	0	0	7.10272E-05	0	3.55136E-05	0	3.55136E-05	3.55136E-05	0	0	0	0	1.52636E-09	1.52636E-09	0.0015264	
3971753768489	397175	3768489	0	0	8.53052E-05	0	4.26526E-05	0	4.26526E-05	4.26526E-05	0	0	0	0	1.83319E-09	1.83319E-09	0.0018332	
3972253768489	397225	3768489	0	0	0.000103575	0	5.17874E-05	0	5.17874E-05	5.17874E-05	0	0	0	0	2.2258E-09	2.2258E-09	0.0022258	
3972753768489	397275	3768489	0	0	0.0001248	0	6.24001E-05	0	6.24001E-05	6.24001E-05	0	0	0	0	2.68194E-09	2.68194E-09	0.0026819	
3973253768489	397325	3768489	0	0	0.000146998	0	7.34992E-05	0	7.34992E-05	7.34992E-05	0	0	0	0	3.15897E-09	3.15897E-09	0.003159	
3973753768489	397375	3768489	0	0	0.000168667	0	8.43337E-05	0	8.43337E-05	8.43337E-05	0	0	0	0	3.62463E-09	3.62463E-09	0.0036246	
3974253768489	397425	3768489	0	0	0.000186211	0	9.31056E-05	0	9.31056E-05	9.31056E-05	0	0	0	0	4.00165E-09	4.00165E-09	0.0040016	
3974753768489	397475	3768489	0	0	0.000196127	0	9.80636E-05	0	9.80636E-05	9.80636E-05	0	0	0	0	4.21474E-09	4.21474E-09	0.0042147	
3975253768489	397525	3768489	0	0	0.000195563	0	9.77814E-05	0	9.77814E-05	9.77814E-05	0	0	0	0	4.20261E-09	4.20261E-09	0.0042026	
3964253768539	396425	3768539	0	0	1.36959E-05	0	6.84795E-06	0	6.84795E-06	6.84795E-06	0	0	0	0	2.94322E-10	2.94322E-10	0.0002943	
3964753768539	396475	3768539	0	0	1.47593E-05	0	7.37966E-06	0	7.37966E-06	7.37966E-06	0	0	0	0	3.17175E-10	3.17175E-10	0.0003172	
3965253768539	396525	3768539	0	0	1.59941E-05	0	7.99704E-06	0	7.99704E-06	7.99704E-06	0	0	0	0	3.4371E-10	3.4371E-10	0.0003437	
3965753768539	396575	3768539	0	0	1.74683E-05	0	8.73413E-06	0	8.73413E-06	8.73413E-06	0	0	0	0	3.7539E-10	3.7539E-10	0.0003754	
3970253768539	397025	3768539	0	0	4.65283E-05	0	2.32641E-05	0	2.32641E-05	2.32641E-05	0	0	0	0	9.99884E-10	9.99884E-10	0.0009999	
3970753768539	397075	3768539	0	0	5.37983E-05	0	2.68991E-05	0	2.68991E-05	2.68991E-05	0	0	0	0	1.15612E-09	1.15612E-09	0.0011561	
3971253768539	397125	3768539	0	0	6.25475E-05	0	3.12738E-05	0	3.12738E-05	3.12738E-05	0	0	0	0	1.34414E-09	1.34414E-09	0.0013441	
3971753768539	397175	3768539	0	0	7.36555E-05	0	3.68277E-05	0	3.68277E-05	3.68277E-05	0	0	0	0	1.58284E-09	1.58284E-09	0.0015828	
3972253768539	397225	3768539	0	0	8.67566E-05	0	4.33783E-05	0	4.33783E-05	4.33783E-05	0	0	0	0	1.86439E-09	1.86439E-09	0.0018644	
3972753768539	397275	3768539	0	0	0.000103053	0	5.15266E-05	0	5.15266E-05	5.15266E-05	0	0	0	0	2.21459E-09	2.21459E-09	0.0022146	
3973253768539	397325	3768539	0	0	0.000118853	0	5.94266E-05	0	5.94266E-05	5.94266E-05	0	0	0	0	2.55413E-09	2.55413E-09	0.0025541	
3973753768539	397375	3768539	0	0	0.000134119	0	6.70595E-05	0	6.70595E-05	6.70595E-05	0	0	0	0	2.88219E-09	2.88219E-09	0.0028822	
3974253768539	397425	3768539	0	0	0.000146497	0	7.32485E-05	0	7.32485E-05	7.32485E-05	0	0	0	0	3.14819E-09	3.14819E-09	0.0031482	
3974753768539	397475	3768539	0	0	0.000154488	0	7.72439E-05	0	7.72439E-05	7.72439E-05	0	0	0	0	3.31991E-09	3.31991E-09	0.0033199	
3975253768539	397525	3768539	0	0	0.000156098	0	7.8049E-05	0	7.8049E-05	7.8049E-05	0	0	0	0	3.35452E-09	3.35452E-09	0.0033545	
3964253768589	396425	3768589	0	0	1.32776E-05	0	6.63879E-06	0	6.63879E-06	6.63879E-06	0	0	0	0	2.85333E-10	2.85333E-10	0.0002853	
3964753768589	396475	3768589	0	0	1.42654E-05	0	7.1327E-06	0	7.1327E-06	7.1327E-06	0	0	0	0	3.06561E-10	3.06561E-10	0.0003066	
3965253768589	396525	3768589	0	0	1.54397E-05	0	7.71985E-06	0	7.71985E-06	7.71985E-06	0	0	0	0	3.31796E-10	3.31796E-10	0.0003318	
3965753768589	396575	3768589	0	0	1.67501E-05	0	8.37504E-06	0	8.37504E-06	8.37504E-06	0	0	0	0	3.59956E-10	3.59956E-10	0.00036	
3966253768589	396625	3768589	0	0	1.82368E-05	0	9.11842E-06	0	9.11842E-06	9.11842E-06	0	0	0	0	3.91906E-10	3.91906E-10	0.0003919	
3968253768589	396825	3768589	0	0	2.66938E-05	0	1.33469E-05	0	1.33469E-05	1.33469E-05	0	0	0	0	5.73645E-10	5.73645E-10	0.0005736	
3968753768589	396875	3768589	0	0	2.97631E-05	0	1.48815E-05	0	1.48815E-05	1.48815E-05	0	0	0	0	6.39603E-10	6.39603E-10	0.0006396	
3969253768589	396925	3768589	0	0	3.31574E-05	0	1.65787E-05	0	1.65787E-05	1.65787E-05	0	0	0	0	7.12547E-10	7.12547E-10	0.0007125	
3969753768589	396975	3768589	0	0	3.75623E-05	0	1.87811E-05	0	1.87811E-05	1.87811E-05	0	0	0	0	8.07207E-10	8.07207E-10	0.0008072	
3970253768589	397025	3768589	0	0	4.26425E-05	0	2.13212E-05	0	2.13212E-05	2.13212E-05	0	0	0	0	9.1638E-10	9.1638E-10	0.0009164	
3970753768589	397075	3768589	0	0	4.83603E-05	0	2.41801E-05	0	2.41801E-05	2.41801E-05	0	0	0	0	1.03925E-09	1.03925E-09	0.0010393	
3971253768589	397125	3768589	0	0	5.57588E-05	0	2.78794E-05	0	2.78794E-05	2.78794E-05	0	0	0	0	1.19825E-09	1.19825E-09	0.0011982	
3971753768589	397175	3768589	0	0	6.43039E-05	0	3.2152E-05	0	3.2152E-05	3.2152E-05	0	0	0	0	1.38188E-09	1.38188E-09	0.0013819	
3972253768589	397225	3768589	0	0	7.39402E-05	0	3.69701E-05	0	3.69701E-05	3.69701E-05	0	0	0	0	1.58896E-09	1.58896E-09	0.001589	
3972753768589	397275	3768589	0	0	8.48793E-05	0	4.24396E-05	0	4.24396E-05	4.24396E-05	0	0	0	0	1.82404E-09	1.82404E-09	0.001824	
3973253768589	397325	3768589	0	0	9.79074E-05	0	4.89537E-05	0	4.89537E-05	4.89537E-05	0	0	0	0	2.10401E-09	2.10401E-09	0.002104	
3973753768589	397375	3768589	0	0	0.000109038	0	5.4519E-05	0	5.4519E-05	5.4519E-05	0	0	0	0	2.34321E-09	2.34321E-09	0.0023432	
3974253768589	397425	3768589	0	0	0.000118195	0	5.90977E-05	0	5.90977E-05	5.90977E-05	0	0	0	0	2.54E-09	2.54E-09	0.00254	
3974753768589	397475	3768589	0	0	0.000124521	0	6.22603E-05	0	6.22603E-05	6.22603E-05	0	0	0	0	2.67592E-09	2.67592E-09	0.0026759	
3975253768589	397525	3768589	0	0	0.00012671	0	6.33552E-05	0	6.33552E-05	6.33552E-05	0	0	0	0	2.72298E-09	2.72298E-09	0.002723	
3964253768639	396425	3768639	0	0	1.28467E-05	0	6.42334E-06	0	6.42334E-06	6.42334E-06	0	0	0	0	2.76073E-10	2.76073E-10	0.0002761	
3964753768639	396475	3768639	0	0	1.37488E-05	0	6.87441E-06	0	6.87441E-06	6.87441E-06	0	0	0	0	2.9546E-10	2.9546E-10	0.0002955	
3965253768639	396525	3768639	0	0	1.48475E-05	0	7.42376E-06	0	7.42376E-06	7.42376E-06	0	0	0	0	3.1907E-10	3.1907E-10	0.0003191	
3965753768639	396575	3768639	0	0	1.6042E-05	0	8.02098E-06	0	8.02098E-06	8.02098E-06	0	0	0	0	3.44739E-10	3.44739E-10	0.0003447	
3966253768639	396625	3768639	0	0	1.73927E-05	0	8.69633E-06	0	8.69633E-06	8.69633E-06	0	0	0	0	3.73765E-10	3.73765E-10	0.0003738	
3966753768639	396675	3768639	0	0	1.89298E-05	0	9.46491E-06	0	9.46491E-06	9.46491E-06	0	0	0	0	4.06799E-10	4.06799E-10	0.0004068	
3967253768639	396725	3768639	0	0	2.06887E-05	0	1.03444E-05	0	1.03444E-05	1.03444E-05	0	0	0	0	4.44598E-10	4.44598E-10	0.0004446	
3967753768639	396775	3768639	0	0	2.26845E-05	0	1.13423E-05	0	1.13423E-05	1.13423E-05	0	0	0	0	4.87487E-10	4.87487E-10	0.0004875	
3968253768639	396825	3768639	0	0	2.5013E-05	0	1.25065E-05	0	1.25065E-05	1.25065E-05	0	0	0	0	5.37524E-10	5.37524E-10	0.0005375	
3968753768639	396875	3768639	0	0	2.76614E-05	0	1.38307E-05	0	1.38307E-05	1.38307E-05	0	0	0	0	5.94439E-10	5.94439E-10	0.0005944	
3969253768639	396925	3768639	0	0	3.07232E-05	0	1.53616E-05	0	1.53616E-05	1.53616E-05	0	0	0	0	6.60235E-10	6.60235E-10	0.0006602	
3969753768639	396975	3768639	0	0	3.44476E-05	0	1.72238E-05	0	1.72238E-05	1.72238E-05	0	0	0	0	7.40274E-10	7.40274E-10	0.0007403	

Garvey Reservoir Rehab - Mitigated Proposed Pump Station			Demolition - 2025	Demolition - 2026	Site Preparation - 203	Site Preparation - 202	Grading - 2034	Grading - 2026	Infrastructure - 203	Infrastructure - 203	Paving - 2025	Architectural Coating - 2	Child Risk				
Unique Identifier	X (UTM)	Y (UTM)	2025	1900	2034	1900	2034	1900	2034	2035	1900	1900	3rd Trimester	0<2	2<16	Total	per million
3970253768639	397025	3768639	0	0	3.86988E-05	0	1.93494E-05	0	1.93494E-05	1.93494E-05	0	0	0	0	8.3163E-10	8.3163E-10	0.0008316
3970753768639	397075	3768639	0	0	4.33985E-05	0	2.16992E-05	0	2.16992E-05	2.16992E-05	0	0	0	0	9.32626E-10	9.32626E-10	0.0009326
3971253768639	397125	3768639	0	0	4.84863E-05	0	2.42431E-05	0	2.42431E-05	2.42431E-05	0	0	0	0	1.04196E-09	1.04196E-09	0.001042
3971753768639	397175	3768639	0	0	5.59554E-05	0	2.79777E-05	0	2.79777E-05	2.79777E-05	0	0	0	0	1.20247E-09	1.20247E-09	0.0012025
3972253768639	397225	3768639	0	0	6.36664E-05	0	3.18332E-05	0	3.18332E-05	3.18332E-05	0	0	0	0	1.36818E-09	1.36818E-09	0.0013682
3972753768639	397275	3768639	0	0	7.23602E-05	0	3.61801E-05	0	3.61801E-05	3.61801E-05	0	0	0	0	1.55501E-09	1.55501E-09	0.001555
3973253768639	397325	3768639	0	0	8.1747E-05	0	4.08735E-05	0	4.08735E-05	4.08735E-05	0	0	0	0	1.75673E-09	1.75673E-09	0.0017567
3973753768639	397375	3768639	0	0	9.01082E-05	0	4.50541E-05	0	4.50541E-05	4.50541E-05	0	0	0	0	1.93641E-09	1.93641E-09	0.0019364
3974253768639	397425	3768639	0	0	9.75445E-05	0	4.87723E-05	0	4.87723E-05	4.87723E-05	0	0	0	0	2.09622E-09	2.09622E-09	0.0020962
3974753768639	397475	3768639	0	0	0.000102363	0	5.11813E-05	0	5.11813E-05	5.11813E-05	0	0	0	0	2.19976E-09	2.19976E-09	0.0021998
3975253768639	397525	3768639	0	0	0.000104691	0	5.23455E-05	0	5.23455E-05	5.23455E-05	0	0	0	0	2.24979E-09	2.24979E-09	0.0022498
3964253768689	396425	3768689	0	0	1.23502E-05	0	6.17512E-06	0	6.17512E-06	6.17512E-06	0	0	0	0	2.65405E-10	2.65405E-10	0.0002654
3964753768689	396475	3768689	0	0	1.32347E-05	0	6.61737E-06	0	6.61737E-06	6.61737E-06	0	0	0	0	2.84412E-10	2.84412E-10	0.0002844
3965253768689	396525	3768689	0	0	1.42024E-05	0	7.1012E-06	0	7.1012E-06	7.1012E-06	0	0	0	0	3.05207E-10	3.05207E-10	0.0003052
3965753768689	396575	3768689	0	0	1.53213E-05	0	7.66063E-06	0	7.66063E-06	7.66063E-06	0	0	0	0	3.29251E-10	3.29251E-10	0.0003293
3966253768689	396625	3768689	0	0	1.65308E-05	0	8.26542E-06	0	8.26542E-06	8.26542E-06	0	0	0	0	3.55245E-10	3.55245E-10	0.0003552
3966753768689	396675	3768689	0	0	1.79244E-05	0	8.96218E-06	0	8.96218E-06	8.96218E-06	0	0	0	0	3.85192E-10	3.85192E-10	0.0003852
3967253768689	396725	3768689	0	0	1.9459E-05	0	9.72951E-06	0	9.72951E-06	9.72951E-06	0	0	0	0	4.18171E-10	4.18171E-10	0.0004182
3967753768689	396775	3768689	0	0	2.1228E-05	0	1.0614E-05	0	1.0614E-05	1.0614E-05	0	0	0	0	4.56186E-10	4.56186E-10	0.0004562
3968253768689	396825	3768689	0	0	2.32591E-05	0	1.16295E-05	0	1.16295E-05	1.16295E-05	0	0	0	0	4.99834E-10	4.99834E-10	0.0004998
3968753768689	396875	3768689	0	0	2.56404E-05	0	1.28202E-05	0	1.28202E-05	1.28202E-05	0	0	0	0	5.51009E-10	5.51009E-10	0.000551
3969253768689	396925	3768689	0	0	2.83242E-05	0	1.41621E-05	0	1.41621E-05	1.41621E-05	0	0	0	0	6.08682E-10	6.08682E-10	0.0006087
3969753768689	396975	3768689	0	0	3.14363E-05	0	1.57182E-05	0	1.57182E-05	1.57182E-05	0	0	0	0	6.75561E-10	6.75561E-10	0.0006756
3970253768689	397025	3768689	0	0	3.50549E-05	0	1.75275E-05	0	1.75275E-05	1.75275E-05	0	0	0	0	7.53325E-10	7.53325E-10	0.0007533
3970753768689	397075	3768689	0	0	3.92759E-05	0	1.96379E-05	0	1.96379E-05	1.96379E-05	0	0	0	0	8.44031E-10	8.44031E-10	0.000844
3971253768689	397125	3768689	0	0	4.32725E-05	0	2.16362E-05	0	2.16362E-05	2.16362E-05	0	0	0	0	9.29918E-10	9.29918E-10	0.0009299
3971753768689	397175	3768689	0	0	4.91389E-05	0	2.45695E-05	0	2.45695E-05	2.45695E-05	0	0	0	0	1.05599E-09	1.05599E-09	0.001056
3972253768689	397225	3768689	0	0	5.55295E-05	0	2.77647E-05	0	2.77647E-05	2.77647E-05	0	0	0	0	1.19332E-09	1.19332E-09	0.0011933
3972753768689	397275	3768689	0	0	6.21645E-05	0	3.10823E-05	0	3.10823E-05	3.10823E-05	0	0	0	0	1.3359E-09	1.3359E-09	0.0013359
3973253768689	397325	3768689	0	0	6.92002E-05	0	3.46001E-05	0	3.46001E-05	3.46001E-05	0	0	0	0	1.4871E-09	1.4871E-09	0.0014871
3973753768689	397375	3768689	0	0	7.59436E-05	0	3.79718E-05	0	3.79718E-05	3.79718E-05	0	0	0	0	1.63201E-09	1.63201E-09	0.001632
3974253768689	397425	3768689	0	0	8.16412E-05	0	4.08206E-05	0	4.08206E-05	4.08206E-05	0	0	0	0	1.75445E-09	1.75445E-09	0.0017545
3974753768689	397475	3768689	0	0	8.58696E-05	0	4.29348E-05	0	4.29348E-05	4.29348E-05	0	0	0	0	1.84532E-09	1.84532E-09	0.0018453
3975253768689	397525	3768689	0	0	8.80973E-05	0	4.40486E-05	0	4.40486E-05	4.40486E-05	0	0	0	0	1.89319E-09	1.89319E-09	0.0018932

Garvey Reservoir Rehab - Mitigated Proposed Pump Station

Offroad DPM Emissions, Ground Level Concentrations and Health Risk Calculations

Residential Receptors

Phase	Year	Emissions (lbs/day)	Meters	lbs/meter	meters (h1)	lbs/day (H1)	g/s (H1)	meters (h2)	lbs/day (H2)	g/s (H2)	hrs/day
Demolition - 2025	2025		1932.1	0	691.2	0	0	1240.9	0	0	10.00
Demolition - 2026	1900		1932.1	0	691.2	0	0	1240.9	0	0	10.00
Site Preparation - 2034	2034	0.0000	1932.1	0	691.2	0	0	1240.9	0	0	10.00
Site Preparation - 2026	1900		1932.1	0	691.2	0	0	1240.9	0	0	10.00
Grading - 2034	2034	0.0000	1932.1	0	691.2	0	0	1240.9	0	0	10.00
Grading - 2026	1900		1932.1	0	691.2	0	0	1240.9	0	0	10.00
Infrastructure - 2034	2034	0.0000	1932.1	0	691.2	0	0	1240.9	0	0	10.00
Infrastructure - 2035	2035	0.0000	1932.1	0	691.2	0	0	1240.9	0	0	10.00
Paving - 2025	1900		1932.1	0	691.2	0	0	1240.9	0	0	10.00
Architectural Coating - 2026	1900		1932.1	0	691.2	0	0	1240.9	0	0	10.00

		AERMOD Column Identifier:	*5*	*5*	*5*	*5*	*5*	*5*	*5*	*5*	*5*	*5*					
			6	*6*	*6*	*6*	*6*	*6*	*6*	*6*	*6*	*6*				*MAX:*	0
Garvey Reservoir Rehab - Mitigated Proposed Pump Station			Demolition - 2025	Demolition - 2026	Site Preparation - 2034	te Preparation - 20	Grading - 2034	Grading - 2026	Infrastructure - 2034	nfrastructure - 203	Paving - 2025	rchitectural Coating - 202	Child Risk				
Unique Identifier	X (UTM)	Y (UTM)	2025	1900	2034	1900	2034	1900	2034	2035	1900	1900	3rd Trimester	0<2	2<16	Total	per million
396166.283767377.2	396166.28	3767377	0	0	0	0	0	0	0	0	0	0	0	0	0	0	0
396266.283767377.2	396266.28	3767377	0	0	0	0	0	0	0	0	0	0	0	0	0	0	0
396366.283767377.2	396366.28	3767377	0	0	0	0	0	0	0	0	0	0	0	0	0	0	0
396466.283767377.2	396466.28	3767377	0	0	0	0	0	0	0	0	0	0	0	0	0	0	0
396566.283767377.2	396566.28	3767377	0	0	0	0	0	0	0	0	0	0	0	0	0	0	0
396666.283767377.2	396666.28	3767377	0	0	0	0	0	0	0	0	0	0	0	0	0	0	0
396766.283767377.2	396766.28	3767377	0	0	0	0	0	0	0	0	0	0	0	0	0	0	0
396866.283767377.2	396866.28	3767377	0	0	0	0	0	0	0	0	0	0	0	0	0	0	0
396966.283767377.2	396966.28	3767377	0	0	0	0	0	0	0	0	0	0	0	0	0	0	0
397066.283767377.2	397066.28	3767377	0	0	0	0	0	0	0	0	0	0	0	0	0	0	0
397166.283767377.2	397166.28	3767377	0	0	0	0	0	0	0	0	0	0	0	0	0	0	0
397266.283767377.2	397266.28	3767377	0	0	0	0	0	0	0	0	0	0	0	0	0	0	0
397366.283767377.2	397366.28	3767377	0	0	0	0	0	0	0	0	0	0	0	0	0	0	0
397466.283767377.2	397466.28	3767377	0	0	0	0	0	0	0	0	0	0	0	0	0	0	0
397566.283767377.2	397566.28	3767377	0	0	0	0	0	0	0	0	0	0	0	0	0	0	0
397666.283767377.2	397666.28	3767377	0	0	0	0	0	0	0	0	0	0	0	0	0	0	0
397766.283767377.2	397766.28	3767377	0	0	0	0	0	0	0	0	0	0	0	0	0	0	0
397866.283767377.2	397866.28	3767377	0	0	0	0	0	0	0	0	0	0	0	0	0	0	0
396166.283767477.2	396166.28	3767477	0	0	0	0	0	0	0	0	0	0	0	0	0	0	0
396266.283767477.2	396266.28	3767477	0	0	0	0	0	0	0	0	0	0	0	0	0	0	0
396366.283767477.2	396366.28	3767477	0	0	0	0	0	0	0	0	0	0	0	0	0	0	0
396466.283767477.2	396466.28	3767477	0	0	0	0	0	0	0	0	0	0	0	0	0	0	0
396566.283767477.2	396566.28	3767477	0	0	0	0	0	0	0	0	0	0	0	0	0	0	0
396666.283767477.2	396666.28	3767477	0	0	0	0	0	0	0	0	0	0	0	0	0	0	0
396766.283767477.2	396766.28	3767477	0	0	0	0	0	0	0	0	0	0	0	0	0	0	0
396866.283767477.2	396866.28	3767477	0	0	0	0	0	0	0	0	0	0	0	0	0	0	0
396966.283767477.2	396966.28	3767477	0	0	0	0	0	0	0	0	0	0	0	0	0	0	0
397066.283767477.2	397066.28	3767477	0	0	0	0	0	0	0	0	0	0	0	0	0	0	0
397166.283767477.2	397166.28	3767477	0	0	0	0	0	0	0	0	0	0	0	0	0	0	0
397266.283767477.2	397266.28	3767477	0	0	0	0	0	0	0	0	0	0	0	0	0	0	0
397366.283767477.2	397366.28	3767477	0	0	0	0	0	0	0	0	0	0	0	0	0	0	0
397466.283767477.2	397466.28	3767477	0	0	0	0	0	0	0	0	0	0	0	0	0	0	0
397566.283767477.2	397566.28	3767477	0	0	0	0	0	0	0	0	0	0	0	0	0	0	0
397666.283767477.2	397666.28	3767477	0	0	0	0	0	0	0	0	0	0	0	0	0	0	0
397766.283767477.2	397766.28	3767477	0	0	0	0	0	0	0	0	0	0	0	0	0	0	0
397866.283767477.2	397866.28	3767477	0	0	0	0	0	0	0	0	0	0	0	0	0	0	0
396166.283767577.2	396166.28	3767577	0	0	0	0	0	0	0	0	0	0	0	0	0	0	0
396266.283767577.2	396266.28	3767577	0	0	0	0	0	0	0	0	0	0	0	0	0	0	0
396366.283767577.2	396366.28	3767577	0	0	0	0	0	0	0	0	0	0	0	0	0	0	0
396466.283767577.2	396466.28	3767577	0	0	0	0	0	0	0	0	0	0	0	0	0	0	0
396566.283767577.2	396566.28	3767577	0	0	0	0	0	0	0	0	0	0	0	0	0	0	0
396666.283767577.2	396666.28	3767577	0	0	0	0	0	0	0	0	0	0	0	0	0	0	0
396766.283767577.2	396766.28	3767577	0	0	0	0	0	0	0	0	0	0	0	0	0	0	0
396866.283767577.2	396866.28	3767577	0	0	0	0	0	0	0	0	0	0	0	0	0	0	0
396966.283767577.2	396966.28	3767577	0	0	0	0	0	0	0	0	0	0	0	0	0	0	0
397066.283767577.2	397066.28	3767577	0	0	0	0	0	0	0	0	0	0	0	0	0	0	0
397166.283767577.2	397166.28	3767577	0	0	0	0	0	0	0	0	0	0	0	0	0	0	0
397266.283767577.2	397266.28	3767577	0	0	0	0	0	0	0	0	0	0	0	0	0	0	0

Garvey Reservoir Rehab - Mitigated Proposed Pump Station			Demolition - 2025	Demolition - 2026	Site Preparation - 2034	te Preparation - 20	Grading - 2034	Grading - 2026	Infrastructure - 2034	nfrastructure - 203	Paving - 2025	rchitectural Coating - 202	Child Risk				
Unique Identifier	X (UTM)	Y (UTM)	2025	1900	2034	1900	2034	1900	2034	2035	1900	1900	3rd Trimester	0<2	2<16	Total	per million
397366.283767577.2	397366.28	3767577	0	0	0	0	0	0	0	0	0	0	0	0	0	0	0
397466.283767577.2	397466.28	3767577	0	0	0	0	0	0	0	0	0	0	0	0	0	0	0
397566.283767577.2	397566.28	3767577	0	0	0	0	0	0	0	0	0	0	0	0	0	0	0
397666.283767577.2	397666.28	3767577	0	0	0	0	0	0	0	0	0	0	0	0	0	0	0
397766.283767577.2	397766.28	3767577	0	0	0	0	0	0	0	0	0	0	0	0	0	0	0
397866.283767577.2	397866.28	3767577	0	0	0	0	0	0	0	0	0	0	0	0	0	0	0
396166.283767677.2	396166.28	3767677	0	0	0	0	0	0	0	0	0	0	0	0	0	0	0
396266.283767677.2	396266.28	3767677	0	0	0	0	0	0	0	0	0	0	0	0	0	0	0
396366.283767677.2	396366.28	3767677	0	0	0	0	0	0	0	0	0	0	0	0	0	0	0
396466.283767677.2	396466.28	3767677	0	0	0	0	0	0	0	0	0	0	0	0	0	0	0
396566.283767677.2	396566.28	3767677	0	0	0	0	0	0	0	0	0	0	0	0	0	0	0
396666.283767677.2	396666.28	3767677	0	0	0	0	0	0	0	0	0	0	0	0	0	0	0
396766.283767677.2	396766.28	3767677	0	0	0	0	0	0	0	0	0	0	0	0	0	0	0
396866.283767677.2	396866.28	3767677	0	0	0	0	0	0	0	0	0	0	0	0	0	0	0
396966.283767677.2	396966.28	3767677	0	0	0	0	0	0	0	0	0	0	0	0	0	0	0
397066.283767677.2	397066.28	3767677	0	0	0	0	0	0	0	0	0	0	0	0	0	0	0
397166.283767677.2	397166.28	3767677	0	0	0	0	0	0	0	0	0	0	0	0	0	0	0
397266.283767677.2	397266.28	3767677	0	0	0	0	0	0	0	0	0	0	0	0	0	0	0
397366.283767677.2	397366.28	3767677	0	0	0	0	0	0	0	0	0	0	0	0	0	0	0
397466.283767677.2	397466.28	3767677	0	0	0	0	0	0	0	0	0	0	0	0	0	0	0
397566.283767677.2	397566.28	3767677	0	0	0	0	0	0	0	0	0	0	0	0	0	0	0
397666.283767677.2	397666.28	3767677	0	0	0	0	0	0	0	0	0	0	0	0	0	0	0
397766.283767677.2	397766.28	3767677	0	0	0	0	0	0	0	0	0	0	0	0	0	0	0
397866.283767677.2	397866.28	3767677	0	0	0	0	0	0	0	0	0	0	0	0	0	0	0
396166.283767777.2	396166.28	3767777	0	0	0	0	0	0	0	0	0	0	0	0	0	0	0
396266.283767777.2	396266.28	3767777	0	0	0	0	0	0	0	0	0	0	0	0	0	0	0
396366.283767777.2	396366.28	3767777	0	0	0	0	0	0	0	0	0	0	0	0	0	0	0
396466.283767777.2	396466.28	3767777	0	0	0	0	0	0	0	0	0	0	0	0	0	0	0
396566.283767777.2	396566.28	3767777	0	0	0	0	0	0	0	0	0	0	0	0	0	0	0
396666.283767777.2	396666.28	3767777	0	0	0	0	0	0	0	0	0	0	0	0	0	0	0
396766.283767777.2	396766.28	3767777	0	0	0	0	0	0	0	0	0	0	0	0	0	0	0
396866.283767777.2	396866.28	3767777	0	0	0	0	0	0	0	0	0	0	0	0	0	0	0
396966.283767777.2	396966.28	3767777	0	0	0	0	0	0	0	0	0	0	0	0	0	0	0
397066.283767777.2	397066.28	3767777	0	0	0	0	0	0	0	0	0	0	0	0	0	0	0
397166.283767777.2	397166.28	3767777	0	0	0	0	0	0	0	0	0	0	0	0	0	0	0
397266.283767777.2	397266.28	3767777	0	0	0	0	0	0	0	0	0	0	0	0	0	0	0
397366.283767777.2	397366.28	3767777	0	0	0	0	0	0	0	0	0	0	0	0	0	0	0
397466.283767777.2	397466.28	3767777	0	0	0	0	0	0	0	0	0	0	0	0	0	0	0
397566.283767777.2	397566.28	3767777	0	0	0	0	0	0	0	0	0	0	0	0	0	0	0
397666.283767777.2	397666.28	3767777	0	0	0	0	0	0	0	0	0	0	0	0	0	0	0
397766.283767777.2	397766.28	3767777	0	0	0	0	0	0	0	0	0	0	0	0	0	0	0
397866.283767777.2	397866.28	3767777	0	0	0	0	0	0	0	0	0	0	0	0	0	0	0
396166.283767877.2	396166.28	3767877	0	0	0	0	0	0	0	0	0	0	0	0	0	0	0
396266.283767877.2	396266.28	3767877	0	0	0	0	0	0	0	0	0	0	0	0	0	0	0
396366.283767877.2	396366.28	3767877	0	0	0	0	0	0	0	0	0	0	0	0	0	0	0
396466.283767877.2	396466.28	3767877	0	0	0	0	0	0	0	0	0	0	0	0	0	0	0
396566.283767877.2	396566.28	3767877	0	0	0	0	0	0	0	0	0	0	0	0	0	0	0
397466.283767877.2	397466.28	3767877	0	0	0	0	0	0	0	0	0	0	0	0	0	0	0
397566.283767877.2	397566.28	3767877	0	0	0	0	0	0	0	0	0	0	0	0	0	0	0
397666.283767877.2	397666.28	3767877	0	0	0	0	0	0	0	0	0	0	0	0	0	0	0
397766.283767877.2	397766.28	3767877	0	0	0	0	0	0	0	0	0	0	0	0	0	0	0
397866.283767877.2	397866.28	3767877	0	0	0	0	0	0	0	0	0	0	0	0	0	0	0
396166.283767977.2	396166.28	3767977	0	0	0	0	0	0	0	0	0	0	0	0	0	0	0
396266.283767977.2	396266.28	3767977	0	0	0	0	0	0	0	0	0	0	0	0	0	0	0
396366.283767977.2	396366.28	3767977	0	0	0	0	0	0	0	0	0	0	0	0	0	0	0
396466.283767977.2	396466.28	3767977	0	0	0	0	0	0	0	0	0	0	0	0	0	0	0
397466.283767977.2	397466.28	3767977	0	0	0	0	0	0	0	0	0	0	0	0	0	0	0
397566.283767977.2	397566.28	3767977	0	0	0	0	0	0	0	0	0	0	0	0	0	0	0
397666.283767977.2	397666.28	3767977	0	0	0	0	0	0	0	0	0	0	0	0	0	0	0
397766.283767977.2	397766.28	3767977	0	0	0	0	0	0	0	0	0	0	0	0	0	0	0
397866.283767977.2	397866.28	3767977	0	0	0	0	0	0	0	0	0	0	0	0	0	0	0
396166.283768077.2	396166.28	3768077	0	0	0	0	0	0	0	0	0	0	0	0	0	0	0
396266.283768077.2	396266.28	3768077	0	0	0	0	0	0	0	0	0	0	0	0	0	0	0
396366.283768077.2	396366.28	3768077	0	0	0	0	0	0	0	0	0	0	0	0	0	0	0
396466.283768077.2	396466.28	3768077	0	0	0	0	0	0	0	0	0	0	0	0	0	0	0
397466.283768077.2	397466.28	3768077	0	0	0	0	0	0	0	0	0	0	0	0	0	0	0
397566.283768077.2	397566.28	3768077	0	0	0	0	0	0	0	0	0	0	0	0	0	0	0
397666.283768077.2	397666.28	3768077	0	0	0	0	0	0	0	0	0	0	0	0	0	0	0
397766.283768077.2	397766.28	3768077	0	0	0	0	0	0	0	0	0	0	0	0	0	0	0
397866.283768077.2	397866.28	3768077	0	0	0	0	0	0	0	0	0	0	0	0	0	0	0
396166.283768177.2	396166.28	3768177	0	0	0	0	0	0	0	0	0	0	0	0	0	0	0
396266.283768177.2	396266.28	3768177	0	0	0	0	0	0	0	0	0	0	0	0	0	0	0
396366.283768177.2	396366.28	3768177	0	0	0	0	0	0	0	0	0	0	0	0	0	0	0
396466.283768177.2	396466.28	3768177	0	0	0	0	0	0	0	0	0	0	0	0	0	0	0
397466.283768177.2	397466.28	3768177	0	0	0	0	0	0	0	0	0	0	0	0	0	0	0

Garvey Reservoir Rehab - Mitigated Proposed Pump Station			Demolition - 2025	Demolition - 2026	Site Preparation - 2034	te Preparation - 20	Grading - 2034	Grading - 2026	Infrastructure - 2034	nfrastructure - 203	Paving - 2025	rchitectural Coating - 202	Child Risk				
Unique Identifier	X (UTM)	Y (UTM)	2025	1900	2034	1900	2034	1900	2034	2035	1900	1900	3rd Trimester	0<2	2<16	Total	per million
397566.283768177.2	397566.28	3768177	0	0	0	0	0	0	0	0	0	0	0	0	0	0	0
397666.283768177.2	397666.28	3768177	0	0	0	0	0	0	0	0	0	0	0	0	0	0	0
397766.283768177.2	397766.28	3768177	0	0	0	0	0	0	0	0	0	0	0	0	0	0	0
397866.283768177.2	397866.28	3768177	0	0	0	0	0	0	0	0	0	0	0	0	0	0	0
396166.283768277.2	396166.28	3768277	0	0	0	0	0	0	0	0	0	0	0	0	0	0	0
396266.283768277.2	396266.28	3768277	0	0	0	0	0	0	0	0	0	0	0	0	0	0	0
396366.283768277.2	396366.28	3768277	0	0	0	0	0	0	0	0	0	0	0	0	0	0	0
396466.283768277.2	396466.28	3768277	0	0	0	0	0	0	0	0	0	0	0	0	0	0	0
397366.283768277.2	397366.28	3768277	0	0	0	0	0	0	0	0	0	0	0	0	0	0	0
397466.283768277.2	397466.28	3768277	0	0	0	0	0	0	0	0	0	0	0	0	0	0	0
397566.283768277.2	397566.28	3768277	0	0	0	0	0	0	0	0	0	0	0	0	0	0	0
397666.283768277.2	397666.28	3768277	0	0	0	0	0	0	0	0	0	0	0	0	0	0	0
397766.283768277.2	397766.28	3768277	0	0	0	0	0	0	0	0	0	0	0	0	0	0	0
397866.283768277.2	397866.28	3768277	0	0	0	0	0	0	0	0	0	0	0	0	0	0	0
396166.283768377.2	396166.28	3768377	0	0	0	0	0	0	0	0	0	0	0	0	0	0	0
396266.283768377.2	396266.28	3768377	0	0	0	0	0	0	0	0	0	0	0	0	0	0	0
396366.283768377.2	396366.28	3768377	0	0	0	0	0	0	0	0	0	0	0	0	0	0	0
396466.283768377.2	396466.28	3768377	0	0	0	0	0	0	0	0	0	0	0	0	0	0	0
397266.283768377.2	397266.28	3768377	0	0	0	0	0	0	0	0	0	0	0	0	0	0	0
397366.283768377.2	397366.28	3768377	0	0	0	0	0	0	0	0	0	0	0	0	0	0	0
397466.283768377.2	397466.28	3768377	0	0	0	0	0	0	0	0	0	0	0	0	0	0	0
397566.283768377.2	397566.28	3768377	0	0	0	0	0	0	0	0	0	0	0	0	0	0	0
397666.283768377.2	397666.28	3768377	0	0	0	0	0	0	0	0	0	0	0	0	0	0	0
397766.283768377.2	397766.28	3768377	0	0	0	0	0	0	0	0	0	0	0	0	0	0	0
397866.283768377.2	397866.28	3768377	0	0	0	0	0	0	0	0	0	0	0	0	0	0	0
396166.283768477.2	396166.28	3768477	0	0	0	0	0	0	0	0	0	0	0	0	0	0	0
396266.283768477.2	396266.28	3768477	0	0	0	0	0	0	0	0	0	0	0	0	0	0	0
396366.283768477.2	396366.28	3768477	0	0	0	0	0	0	0	0	0	0	0	0	0	0	0
396466.283768477.2	396466.28	3768477	0	0	0	0	0	0	0	0	0	0	0	0	0	0	0
397166.283768477.2	397166.28	3768477	0	0	0	0	0	0	0	0	0	0	0	0	0	0	0
397266.283768477.2	397266.28	3768477	0	0	0	0	0	0	0	0	0	0	0	0	0	0	0
397366.283768477.2	397366.28	3768477	0	0	0	0	0	0	0	0	0	0	0	0	0	0	0
397466.283768477.2	397466.28	3768477	0	0	0	0	0	0	0	0	0	0	0	0	0	0	0
397566.283768477.2	397566.28	3768477	0	0	0	0	0	0	0	0	0	0	0	0	0	0	0
397666.283768477.2	397666.28	3768477	0	0	0	0	0	0	0	0	0	0	0	0	0	0	0
397766.283768477.2	397766.28	3768477	0	0	0	0	0	0	0	0	0	0	0	0	0	0	0
397866.283768477.2	397866.28	3768477	0	0	0	0	0	0	0	0	0	0	0	0	0	0	0
396166.283768577.2	396166.28	3768577	0	0	0	0	0	0	0	0	0	0	0	0	0	0	0
396266.283768577.2	396266.28	3768577	0	0	0	0	0	0	0	0	0	0	0	0	0	0	0
396366.283768577.2	396366.28	3768577	0	0	0	0	0	0	0	0	0	0	0	0	0	0	0
396466.283768577.2	396466.28	3768577	0	0	0	0	0	0	0	0	0	0	0	0	0	0	0
396566.283768577.2	396566.28	3768577	0	0	0	0	0	0	0	0	0	0	0	0	0	0	0
396866.283768577.2	396866.28	3768577	0	0	0	0	0	0	0	0	0	0	0	0	0	0	0
396966.283768577.2	396966.28	3768577	0	0	0	0	0	0	0	0	0	0	0	0	0	0	0
397066.283768577.2	397066.28	3768577	0	0	0	0	0	0	0	0	0	0	0	0	0	0	0
397166.283768577.2	397166.28	3768577	0	0	0	0	0	0	0	0	0	0	0	0	0	0	0
397266.283768577.2	397266.28	3768577	0	0	0	0	0	0	0	0	0	0	0	0	0	0	0
397366.283768577.2	397366.28	3768577	0	0	0	0	0	0	0	0	0	0	0	0	0	0	0
397466.283768577.2	397466.28	3768577	0	0	0	0	0	0	0	0	0	0	0	0	0	0	0
397566.283768577.2	397566.28	3768577	0	0	0	0	0	0	0	0	0	0	0	0	0	0	0
397666.283768577.2	397666.28	3768577	0	0	0	0	0	0	0	0	0	0	0	0	0	0	0
397766.283768577.2	397766.28	3768577	0	0	0	0	0	0	0	0	0	0	0	0	0	0	0
397866.283768577.2	397866.28	3768577	0	0	0	0	0	0	0	0	0	0	0	0	0	0	0
396166.283768677.2	396166.28	3768677	0	0	0	0	0	0	0	0	0	0	0	0	0	0	0
396266.283768677.2	396266.28	3768677	0	0	0	0	0	0	0	0	0	0	0	0	0	0	0
396366.283768677.2	396366.28	3768677	0	0	0	0	0	0	0	0	0	0	0	0	0	0	0
396466.283768677.2	396466.28	3768677	0	0	0	0	0	0	0	0	0	0	0	0	0	0	0
396566.283768677.2	396566.28	3768677	0	0	0	0	0	0	0	0	0	0	0	0	0	0	0
396666.283768677.2	396666.28	3768677	0	0	0	0	0	0	0	0	0	0	0	0	0	0	0
396766.283768677.2	396766.28	3768677	0	0	0	0	0	0	0	0	0	0	0	0	0	0	0
396866.283768677.2	396866.28	3768677	0	0	0	0	0	0	0	0	0	0	0	0	0	0	0
396966.283768677.2	396966.28	3768677	0	0	0	0	0	0	0	0	0	0	0	0	0	0	0
397066.283768677.2	397066.28	3768677	0	0	0	0	0	0	0	0	0	0	0	0	0	0	0
397166.283768677.2	397166.28	3768677	0	0	0	0	0	0	0	0	0	0	0	0	0	0	0
397366.283768677.2	397366.28	3768677	0	0	0	0	0	0	0	0	0	0	0	0	0	0	0
397466.283768677.2	397466.28	3768677	0	0	0	0	0	0	0	0	0	0	0	0	0	0	0
397566.283768677.2	397566.28	3768677	0	0	0	0	0	0	0	0	0	0	0	0	0	0	0
397666.283768677.2	397666.28	3768677	0	0	0	0	0	0	0	0	0	0	0	0	0	0	0
397766.283768677.2	397766.28	3768677	0	0	0	0	0	0	0	0	0	0	0	0	0	0	0
397866.283768677.2	397866.28	3768677	0	0	0	0	0	0	0	0	0	0	0	0	0	0	0
396166.283768777.2	396166.28	3768777	0	0	0	0	0	0	0	0	0	0	0	0	0	0	0
396266.283768777.2	396266.28	3768777	0	0	0	0	0	0	0	0	0	0	0	0	0	0	0
396366.283768777.2	396366.28	3768777	0	0	0	0	0	0	0	0	0	0	0	0	0	0	0
396466.283768777.2	396466.28	3768777	0	0	0	0	0	0	0	0	0	0	0	0	0	0	0
396566.283768777.2	396566.28	3768777	0	0	0	0	0	0	0	0	0	0	0	0	0	0	0

Garvey Reservoir Rehab - Mitigated Proposed Pump Station			Demolition - 2025	Demolition - 2026	Site Preparation - 2034	te Preparation - 20	Grading - 2034	Grading - 2026	Infrastructure - 2034	nfrastructure - 203	Paving - 2025	rchitectural Coating - 202	Child Risk				
Unique Identifier	X (UTM)	Y (UTM)	2025	1900	2034	1900	2034	1900	2034	2035	1900	1900	3rd Trimester	0<2	2<16	Total	per million
396666.283768777.2	396666.28	3768777	0	0	0	0	0	0	0	0	0	0	0	0	0	0	0
396766.283768777.2	396766.28	3768777	0	0	0	0	0	0	0	0	0	0	0	0	0	0	0
396866.283768777.2	396866.28	3768777	0	0	0	0	0	0	0	0	0	0	0	0	0	0	0
396966.283768777.2	396966.28	3768777	0	0	0	0	0	0	0	0	0	0	0	0	0	0	0
397066.283768777.2	397066.28	3768777	0	0	0	0	0	0	0	0	0	0	0	0	0	0	0
397166.283768777.2	397166.28	3768777	0	0	0	0	0	0	0	0	0	0	0	0	0	0	0
397266.283768777.2	397266.28	3768777	0	0	0	0	0	0	0	0	0	0	0	0	0	0	0
397366.283768777.2	397366.28	3768777	0	0	0	0	0	0	0	0	0	0	0	0	0	0	0
397466.283768777.2	397466.28	3768777	0	0	0	0	0	0	0	0	0	0	0	0	0	0	0
397566.283768777.2	397566.28	3768777	0	0	0	0	0	0	0	0	0	0	0	0	0	0	0
397666.283768777.2	397666.28	3768777	0	0	0	0	0	0	0	0	0	0	0	0	0	0	0
397766.283768777.2	397766.28	3768777	0	0	0	0	0	0	0	0	0	0	0	0	0	0	0
397866.283768777.2	397866.28	3768777	0	0	0	0	0	0	0	0	0	0	0	0	0	0	0
396166.283768877.2	396166.28	3768877	0	0	0	0	0	0	0	0	0	0	0	0	0	0	0
396266.283768877.2	396266.28	3768877	0	0	0	0	0	0	0	0	0	0	0	0	0	0	0
396366.283768877.2	396366.28	3768877	0	0	0	0	0	0	0	0	0	0	0	0	0	0	0
396466.283768877.2	396466.28	3768877	0	0	0	0	0	0	0	0	0	0	0	0	0	0	0
396566.283768877.2	396566.28	3768877	0	0	0	0	0	0	0	0	0	0	0	0	0	0	0
396666.283768877.2	396666.28	3768877	0	0	0	0	0	0	0	0	0	0	0	0	0	0	0
396766.283768877.2	396766.28	3768877	0	0	0	0	0	0	0	0	0	0	0	0	0	0	0
396866.283768877.2	396866.28	3768877	0	0	0	0	0	0	0	0	0	0	0	0	0	0	0
396966.283768877.2	396966.28	3768877	0	0	0	0	0	0	0	0	0	0	0	0	0	0	0
397066.283768877.2	397066.28	3768877	0	0	0	0	0	0	0	0	0	0	0	0	0	0	0
397166.283768877.2	397166.28	3768877	0	0	0	0	0	0	0	0	0	0	0	0	0	0	0
397266.283768877.2	397266.28	3768877	0	0	0	0	0	0	0	0	0	0	0	0	0	0	0
397366.283768877.2	397366.28	3768877	0	0	0	0	0	0	0	0	0	0	0	0	0	0	0
397466.283768877.2	397466.28	3768877	0	0	0	0	0	0	0	0	0	0	0	0	0	0	0
397566.283768877.2	397566.28	3768877	0	0	0	0	0	0	0	0	0	0	0	0	0	0	0
397666.283768877.2	397666.28	3768877	0	0	0	0	0	0	0	0	0	0	0	0	0	0	0
397766.283768877.2	397766.28	3768877	0	0	0	0	0	0	0	0	0	0	0	0	0	0	0
397866.283768877.2	397866.28	3768877	0	0	0	0	0	0	0	0	0	0	0	0	0	0	0
3964253767739	396425	3767739	0	0	0	0	0	0	0	0	0	0	0	0	0	0	0
3964753767739	396475	3767739	0	0	0	0	0	0	0	0	0	0	0	0	0	0	0
3965253767739	396525	3767739	0	0	0	0	0	0	0	0	0	0	0	0	0	0	0
3965753767739	396575	3767739	0	0	0	0	0	0	0	0	0	0	0	0	0	0	0
3966253767739	396625	3767739	0	0	0	0	0	0	0	0	0	0	0	0	0	0	0
3966753767739	396675	3767739	0	0	0	0	0	0	0	0	0	0	0	0	0	0	0
3967253767739	396725	3767739	0	0	0	0	0	0	0	0	0	0	0	0	0	0	0
3967753767739	396775	3767739	0	0	0	0	0	0	0	0	0	0	0	0	0	0	0
3968253767739	396825	3767739	0	0	0	0	0	0	0	0	0	0	0	0	0	0	0
3968753767739	396875	3767739	0	0	0	0	0	0	0	0	0	0	0	0	0	0	0
3969253767739	396925	3767739	0	0	0	0	0	0	0	0	0	0	0	0	0	0	0
3969753767739	396975	3767739	0	0	0	0	0	0	0	0	0	0	0	0	0	0	0
3970253767739	397025	3767739	0	0	0	0	0	0	0	0	0	0	0	0	0	0	0
3970753767739	397075	3767739	0	0	0	0	0	0	0	0	0	0	0	0	0	0	0
3971253767739	397125	3767739	0	0	0	0	0	0	0	0	0	0	0	0	0	0	0
3971753767739	397175	3767739	0	0	0	0	0	0	0	0	0	0	0	0	0	0	0
3972253767739	397225	3767739	0	0	0	0	0	0	0	0	0	0	0	0	0	0	0
3972753767739	397275	3767739	0	0	0	0	0	0	0	0	0	0	0	0	0	0	0
3973253767739	397325	3767739	0	0	0	0	0	0	0	0	0	0	0	0	0	0	0
3973753767739	397375	3767739	0	0	0	0	0	0	0	0	0	0	0	0	0	0	0
3974253767739	397425	3767739	0	0	0	0	0	0	0	0	0	0	0	0	0	0	0
3974753767739	397475	3767739	0	0	0	0	0	0	0	0	0	0	0	0	0	0	0
3975253767739	397525	3767739	0	0	0	0	0	0	0	0	0	0	0	0	0	0	0
3964253767789	396425	3767789	0	0	0	0	0	0	0	0	0	0	0	0	0	0	0
3964753767789	396475	3767789	0	0	0	0	0	0	0	0	0	0	0	0	0	0	0
3965253767789	396525	3767789	0	0	0	0	0	0	0	0	0	0	0	0	0	0	0
3965753767789	396575	3767789	0	0	0	0	0	0	0	0	0	0	0	0	0	0	0
3966253767789	396625	3767789	0	0	0	0	0	0	0	0	0	0	0	0	0	0	0
3966753767789	396675	3767789	0	0	0	0	0	0	0	0	0	0	0	0	0	0	0
3967253767789	396725	3767789	0	0	0	0	0	0	0	0	0	0	0	0	0	0	0
3967753767789	396775	3767789	0	0	0	0	0	0	0	0	0	0	0	0	0	0	0
3968253767789	396825	3767789	0	0	0	0	0	0	0	0	0	0	0	0	0	0	0
3968753767789	396875	3767789	0	0	0	0	0	0	0	0	0	0	0	0	0	0	0
3969253767789	396925	3767789	0	0	0	0	0	0	0	0	0	0	0	0	0	0	0
3969753767789	396975	3767789	0	0	0	0	0	0	0	0	0	0	0	0	0	0	0
3970253767789	397025	3767789	0	0	0	0	0	0	0	0	0	0	0	0	0	0	0
3970753767789	397075	3767789	0	0	0	0	0	0	0	0	0	0	0	0	0	0	0
3971253767789	397125	3767789	0	0	0	0	0	0	0	0	0	0	0	0	0	0	0
3971753767789	397175	3767789	0	0	0	0	0	0	0	0	0	0	0	0	0	0	0
3972253767789	397225	3767789	0	0	0	0	0	0	0	0	0	0	0	0	0	0	0
3972753767789	397275	3767789	0	0	0	0	0	0	0	0	0	0	0	0	0	0	0
3973253767789	397325	3767789	0	0	0	0	0	0	0	0	0	0	0	0	0	0	0
3973753767789	397375	3767789	0	0	0	0	0	0	0	0	0	0	0	0	0	0	0
3974253767789	397425	3767789	0	0	0	0	0	0	0	0	0	0	0	0	0	0	0

Garvey Reservoir Rehab - Mitigated Proposed Pump Station			Demolition - 2025	Demolition - 2026	Site Preparation - 2034	te Preparation - 20	Grading - 2034	Grading - 2026	Infrastructure - 2034	nfrastructure - 203	Paving - 2025	rchitectural Coating - 202	Child Risk				
Unique Identifier	X (UTM)	Y (UTM)	2025	1900	2034	1900	2034	1900	2034	2035	1900	1900	3rd Trimester	0<2	2<16	Total	per million
3974753767789	397475	3767789	0	0	0	0	0	0	0	0	0	0	0	0	0	0	0
3975253767789	397525	3767789	0	0	0	0	0	0	0	0	0	0	0	0	0	0	0
3964253767839	396425	3767839	0	0	0	0	0	0	0	0	0	0	0	0	0	0	0
3964753767839	396475	3767839	0	0	0	0	0	0	0	0	0	0	0	0	0	0	0
3965253767839	396525	3767839	0	0	0	0	0	0	0	0	0	0	0	0	0	0	0
3965753767839	396575	3767839	0	0	0	0	0	0	0	0	0	0	0	0	0	0	0
3966253767839	396625	3767839	0	0	0	0	0	0	0	0	0	0	0	0	0	0	0
3966753767839	396675	3767839	0	0	0	0	0	0	0	0	0	0	0	0	0	0	0
3967253767839	396725	3767839	0	0	0	0	0	0	0	0	0	0	0	0	0	0	0
3967753767839	396775	3767839	0	0	0	0	0	0	0	0	0	0	0	0	0	0	0
3968253767839	396825	3767839	0	0	0	0	0	0	0	0	0	0	0	0	0	0	0
3968753767839	396875	3767839	0	0	0	0	0	0	0	0	0	0	0	0	0	0	0
3969253767839	396925	3767839	0	0	0	0	0	0	0	0	0	0	0	0	0	0	0
3969753767839	396975	3767839	0	0	0	0	0	0	0	0	0	0	0	0	0	0	0
3970253767839	397025	3767839	0	0	0	0	0	0	0	0	0	0	0	0	0	0	0
3970753767839	397075	3767839	0	0	0	0	0	0	0	0	0	0	0	0	0	0	0
3971253767839	397125	3767839	0	0	0	0	0	0	0	0	0	0	0	0	0	0	0
3971753767839	397175	3767839	0	0	0	0	0	0	0	0	0	0	0	0	0	0	0
3972253767839	397225	3767839	0	0	0	0	0	0	0	0	0	0	0	0	0	0	0
3972753767839	397275	3767839	0	0	0	0	0	0	0	0	0	0	0	0	0	0	0
3973253767839	397325	3767839	0	0	0	0	0	0	0	0	0	0	0	0	0	0	0
3973753767839	397375	3767839	0	0	0	0	0	0	0	0	0	0	0	0	0	0	0
3974753767839	397475	3767839	0	0	0	0	0	0	0	0	0	0	0	0	0	0	0
3975253767839	397525	3767839	0	0	0	0	0	0	0	0	0	0	0	0	0	0	0
3964253767889	396425	3767889	0	0	0	0	0	0	0	0	0	0	0	0	0	0	0
3964753767889	396475	3767889	0	0	0	0	0	0	0	0	0	0	0	0	0	0	0
3965253767889	396525	3767889	0	0	0	0	0	0	0	0	0	0	0	0	0	0	0
3965753767889	396575	3767889	0	0	0	0	0	0	0	0	0	0	0	0	0	0	0
3974753767889	397475	3767889	0	0	0	0	0	0	0	0	0	0	0	0	0	0	0
3975253767889	397525	3767889	0	0	0	0	0	0	0	0	0	0	0	0	0	0	0
3964253767939	396425	3767939	0	0	0	0	0	0	0	0	0	0	0	0	0	0	0
3964753767939	396475	3767939	0	0	0	0	0	0	0	0	0	0	0	0	0	0	0
3965253767939	396525	3767939	0	0	0	0	0	0	0	0	0	0	0	0	0	0	0
3974753767939	397475	3767939	0	0	0	0	0	0	0	0	0	0	0	0	0	0	0
3975253767939	397525	3767939	0	0	0	0	0	0	0	0	0	0	0	0	0	0	0
3964253767989	396425	3767989	0	0	0	0	0	0	0	0	0	0	0	0	0	0	0
3964753767989	396475	3767989	0	0	0	0	0	0	0	0	0	0	0	0	0	0	0
3974753767989	397475	3767989	0	0	0	0	0	0	0	0	0	0	0	0	0	0	0
3975253767989	397525	3767989	0	0	0	0	0	0	0	0	0	0	0	0	0	0	0
3964253768039	396425	3768039	0	0	0	0	0	0	0	0	0	0	0	0	0	0	0
3964753768039	396475	3768039	0	0	0	0	0	0	0	0	0	0	0	0	0	0	0
3974753768039	397475	3768039	0	0	0	0	0	0	0	0	0	0	0	0	0	0	0
3975253768039	397525	3768039	0	0	0	0	0	0	0	0	0	0	0	0	0	0	0
3964253768089	396425	3768089	0	0	0	0	0	0	0	0	0	0	0	0	0	0	0
3964753768089	396475	3768089	0	0	0	0	0	0	0	0	0	0	0	0	0	0	0
3974753768089	397475	3768089	0	0	0	0	0	0	0	0	0	0	0	0	0	0	0
3975253768089	397525	3768089	0	0	0	0	0	0	0	0	0	0	0	0	0	0	0
3964253768139	396425	3768139	0	0	0	0	0	0	0	0	0	0	0	0	0	0	0
3964753768139	396475	3768139	0	0	0	0	0	0	0	0	0	0	0	0	0	0	0
3974253768139	397425	3768139	0	0	0	0	0	0	0	0	0	0	0	0	0	0	0
3974753768139	397475	3768139	0	0	0	0	0	0	0	0	0	0	0	0	0	0	0
3975253768139	397525	3768139	0	0	0	0	0	0	0	0	0	0	0	0	0	0	0
3964253768189	396425	3768189	0	0	0	0	0	0	0	0	0	0	0	0	0	0	0
3964753768189	396475	3768189	0	0	0	0	0	0	0	0	0	0	0	0	0	0	0
3973753768189	397375	3768189	0	0	0	0	0	0	0	0	0	0	0	0	0	0	0
3974253768189	397425	3768189	0	0	0	0	0	0	0	0	0	0	0	0	0	0	0
3974753768189	397475	3768189	0	0	0	0	0	0	0	0	0	0	0	0	0	0	0
3975253768189	397525	3768189	0	0	0	0	0	0	0	0	0	0	0	0	0	0	0
3964253768239	396425	3768239	0	0	0	0	0	0	0	0	0	0	0	0	0	0	0
3964753768239	396475	3768239	0	0	0	0	0	0	0	0	0	0	0	0	0	0	0
3973753768239	397375	3768239	0	0	0	0	0	0	0	0	0	0	0	0	0	0	0
3974253768239	397425	3768239	0	0	0	0	0	0	0	0	0	0	0	0	0	0	0
3974753768239	397475	3768239	0	0	0	0	0	0	0	0	0	0	0	0	0	0	0
3975253768239	397525	3768239	0	0	0	0	0	0	0	0	0	0	0	0	0	0	0
3964253768289	396425	3768289	0	0	0	0	0	0	0	0	0	0	0	0	0	0	0
3964753768289	396475	3768289	0	0	0	0	0	0	0	0	0	0	0	0	0	0	0
3973253768289	397325	3768289	0	0	0	0	0	0	0	0	0	0	0	0	0	0	0
3973753768289	397375	3768289	0	0	0	0	0	0	0	0	0	0	0	0	0	0	0
3974253768289	397425	3768289	0	0	0	0	0	0	0	0	0	0	0	0	0	0	0
3974753768289	397475	3768289	0	0	0	0	0	0	0	0	0	0	0	0	0	0	0
3975253768289	397525	3768289	0	0	0	0	0	0	0	0	0	0	0	0	0	0	0
3964253768339	396425	3768339	0	0	0	0	0	0	0	0	0	0	0	0	0	0	0
3964753768339	396475	3768339	0	0	0	0	0	0	0	0	0	0	0	0	0	0	0
3965253768339	396525	3768339	0	0	0	0	0	0	0	0	0	0	0	0	0	0	0
3972753768339	397275	3768339	0	0	0	0	0	0	0	0	0	0	0	0	0	0	0

Garvey Reservoir Rehab - Mitigated Proposed Pump Station			Demolition - 2025	Demolition - 2026	Site Preparation - 2034	te Preparation - 20	Grading - 2034	Grading - 2026	Infrastructure - 2034	nfrastructure - 203	Paving - 2025	rchitectural Coating - 202	Child Risk				
Unique Identifier	X (UTM)	Y (UTM)	2025	1900	2034	1900	2034	1900	2034	2035	1900	1900	3rd Trimester	0<2	2<16	Total	per million
3973253768339	397325	3768339	0	0	0	0	0	0	0	0	0	0	0	0	0	0	0
3973753768339	397375	3768339	0	0	0	0	0	0	0	0	0	0	0	0	0	0	0
3974253768339	397425	3768339	0	0	0	0	0	0	0	0	0	0	0	0	0	0	0
3974753768339	397475	3768339	0	0	0	0	0	0	0	0	0	0	0	0	0	0	0
3975253768339	397525	3768339	0	0	0	0	0	0	0	0	0	0	0	0	0	0	0
3964253768389	396425	3768389	0	0	0	0	0	0	0	0	0	0	0	0	0	0	0
3964753768389	396475	3768389	0	0	0	0	0	0	0	0	0	0	0	0	0	0	0
3965253768389	396525	3768389	0	0	0	0	0	0	0	0	0	0	0	0	0	0	0
3972253768389	397225	3768389	0	0	0	0	0	0	0	0	0	0	0	0	0	0	0
3972753768389	397275	3768389	0	0	0	0	0	0	0	0	0	0	0	0	0	0	0
3973253768389	397325	3768389	0	0	0	0	0	0	0	0	0	0	0	0	0	0	0
3973753768389	397375	3768389	0	0	0	0	0	0	0	0	0	0	0	0	0	0	0
3974253768389	397425	3768389	0	0	0	0	0	0	0	0	0	0	0	0	0	0	0
3974753768389	397475	3768389	0	0	0	0	0	0	0	0	0	0	0	0	0	0	0
3975253768389	397525	3768389	0	0	0	0	0	0	0	0	0	0	0	0	0	0	0
3964253768439	396425	3768439	0	0	0	0	0	0	0	0	0	0	0	0	0	0	0
3964753768439	396475	3768439	0	0	0	0	0	0	0	0	0	0	0	0	0	0	0
3965253768439	396525	3768439	0	0	0	0	0	0	0	0	0	0	0	0	0	0	0
3971753768439	397175	3768439	0	0	0	0	0	0	0	0	0	0	0	0	0	0	0
3972253768439	397225	3768439	0	0	0	0	0	0	0	0	0	0	0	0	0	0	0
3972753768439	397275	3768439	0	0	0	0	0	0	0	0	0	0	0	0	0	0	0
3973253768439	397325	3768439	0	0	0	0	0	0	0	0	0	0	0	0	0	0	0
3973753768439	397375	3768439	0	0	0	0	0	0	0	0	0	0	0	0	0	0	0
3974253768439	397425	3768439	0	0	0	0	0	0	0	0	0	0	0	0	0	0	0
3974753768439	397475	3768439	0	0	0	0	0	0	0	0	0	0	0	0	0	0	0
3975253768439	397525	3768439	0	0	0	0	0	0	0	0	0	0	0	0	0	0	0
3964253768489	396425	3768489	0	0	0	0	0	0	0	0	0	0	0	0	0	0	0
3964753768489	396475	3768489	0	0	0	0	0	0	0	0	0	0	0	0	0	0	0
3965253768489	396525	3768489	0	0	0	0	0	0	0	0	0	0	0	0	0	0	0
3970753768489	397075	3768489	0	0	0	0	0	0	0	0	0	0	0	0	0	0	0
3971253768489	397125	3768489	0	0	0	0	0	0	0	0	0	0	0	0	0	0	0
3971753768489	397175	3768489	0	0	0	0	0	0	0	0	0	0	0	0	0	0	0
3972253768489	397225	3768489	0	0	0	0	0	0	0	0	0	0	0	0	0	0	0
3972753768489	397275	3768489	0	0	0	0	0	0	0	0	0	0	0	0	0	0	0
3973253768489	397325	3768489	0	0	0	0	0	0	0	0	0	0	0	0	0	0	0
3973753768489	397375	3768489	0	0	0	0	0	0	0	0	0	0	0	0	0	0	0
3974253768489	397425	3768489	0	0	0	0	0	0	0	0	0	0	0	0	0	0	0
3974753768489	397475	3768489	0	0	0	0	0	0	0	0	0	0	0	0	0	0	0
3975253768489	397525	3768489	0	0	0	0	0	0	0	0	0	0	0	0	0	0	0
3964253768539	396425	3768539	0	0	0	0	0	0	0	0	0	0	0	0	0	0	0
3964753768539	396475	3768539	0	0	0	0	0	0	0	0	0	0	0	0	0	0	0
3965253768539	396525	3768539	0	0	0	0	0	0	0	0	0	0	0	0	0	0	0
3965753768539	396575	3768539	0	0	0	0	0	0	0	0	0	0	0	0	0	0	0
3970253768539	397025	3768539	0	0	0	0	0	0	0	0	0	0	0	0	0	0	0
3970753768539	397075	3768539	0	0	0	0	0	0	0	0	0	0	0	0	0	0	0
3971253768539	397125	3768539	0	0	0	0	0	0	0	0	0	0	0	0	0	0	0
3971753768539	397175	3768539	0	0	0	0	0	0	0	0	0	0	0	0	0	0	0
3972253768539	397225	3768539	0	0	0	0	0	0	0	0	0	0	0	0	0	0	0
3972753768539	397275	3768539	0	0	0	0	0	0	0	0	0	0	0	0	0	0	0
3973253768539	397325	3768539	0	0	0	0	0	0	0	0	0	0	0	0	0	0	0
3973753768539	397375	3768539	0	0	0	0	0	0	0	0	0	0	0	0	0	0	0
3974253768539	397425	3768539	0	0	0	0	0	0	0	0	0	0	0	0	0	0	0
3974753768539	397475	3768539	0	0	0	0	0	0	0	0	0	0	0	0	0	0	0
3975253768539	397525	3768539	0	0	0	0	0	0	0	0	0	0	0	0	0	0	0
3964253768589	396425	3768589	0	0	0	0	0	0	0	0	0	0	0	0	0	0	0
3964753768589	396475	3768589	0	0	0	0	0	0	0	0	0	0	0	0	0	0	0
3965253768589	396525	3768589	0	0	0	0	0	0	0	0	0	0	0	0	0	0	0
3965753768589	396575	3768589	0	0	0	0	0	0	0	0	0	0	0	0	0	0	0
3966253768589	396625	3768589	0	0	0	0	0	0	0	0	0	0	0	0	0	0	0
3968253768589	396825	3768589	0	0	0	0	0	0	0	0	0	0	0	0	0	0	0
3968753768589	396875	3768589	0	0	0	0	0	0	0	0	0	0	0	0	0	0	0
3969253768589	396925	3768589	0	0	0	0	0	0	0	0	0	0	0	0	0	0	0
3969753768589	396975	3768589	0	0	0	0	0	0	0	0	0	0	0	0	0	0	0
3970253768589	397025	3768589	0	0	0	0	0	0	0	0	0	0	0	0	0	0	0
3970753768589	397075	3768589	0	0	0	0	0	0	0	0	0	0	0	0	0	0	0
3971253768589	397125	3768589	0	0	0	0	0	0	0	0	0	0	0	0	0	0	0
3971753768589	397175	3768589	0	0	0	0	0	0	0	0	0	0	0	0	0	0	0
3972253768589	397225	3768589	0	0	0	0	0	0	0	0	0	0	0	0	0	0	0
3972753768589	397275	3768589	0	0	0	0	0	0	0	0	0	0	0	0	0	0	0
3973253768589	397325	3768589	0	0	0	0	0	0	0	0	0	0	0	0	0	0	0
3973753768589	397375	3768589	0	0	0	0	0	0	0	0	0	0	0	0	0	0	0
3974253768589	397425	3768589	0	0	0	0	0	0	0	0	0	0	0	0	0	0	0
3974753768589	397475	3768589	0	0	0	0	0	0	0	0	0	0	0	0	0	0	0
3975253768589	397525	3768589	0	0	0	0	0	0	0	0	0	0	0	0	0	0	0
3964253768639	396425	3768639	0	0	0	0	0	0	0	0	0	0	0	0	0	0	0

Garvey Reservoir Rehab - Mitigated Proposed Pump Station			Demolition - 2025	Demolition - 2026	Site Preparation - 2034	te Preparation - 20	Grading - 2034	Grading - 2026	Infrastructure - 2034	nfrastructure - 203	Paving - 2025	rchitectural Coating - 202	Child Risk				
Unique Identifier	X (UTM)	Y (UTM)	2025	1900	2034	1900	2034	1900	2034	2035	1900	1900	3rd Trimester	0<2	2<16	Total	per million
3964753768639	396475	3768639	0	0	0	0	0	0	0	0	0	0	0	0	0	0	0
3965253768639	396525	3768639	0	0	0	0	0	0	0	0	0	0	0	0	0	0	0
3965753768639	396575	3768639	0	0	0	0	0	0	0	0	0	0	0	0	0	0	0
3966253768639	396625	3768639	0	0	0	0	0	0	0	0	0	0	0	0	0	0	0
3966753768639	396675	3768639	0	0	0	0	0	0	0	0	0	0	0	0	0	0	0
3967253768639	396725	3768639	0	0	0	0	0	0	0	0	0	0	0	0	0	0	0
3967753768639	396775	3768639	0	0	0	0	0	0	0	0	0	0	0	0	0	0	0
3968253768639	396825	3768639	0	0	0	0	0	0	0	0	0	0	0	0	0	0	0
3968753768639	396875	3768639	0	0	0	0	0	0	0	0	0	0	0	0	0	0	0
3969253768639	396925	3768639	0	0	0	0	0	0	0	0	0	0	0	0	0	0	0
3969753768639	396975	3768639	0	0	0	0	0	0	0	0	0	0	0	0	0	0	0
3970253768639	397025	3768639	0	0	0	0	0	0	0	0	0	0	0	0	0	0	0
3970753768639	397075	3768639	0	0	0	0	0	0	0	0	0	0	0	0	0	0	0
3971253768639	397125	3768639	0	0	0	0	0	0	0	0	0	0	0	0	0	0	0
3971753768639	397175	3768639	0	0	0	0	0	0	0	0	0	0	0	0	0	0	0
3972253768639	397225	3768639	0	0	0	0	0	0	0	0	0	0	0	0	0	0	0
3972753768639	397275	3768639	0	0	0	0	0	0	0	0	0	0	0	0	0	0	0
3973253768639	397325	3768639	0	0	0	0	0	0	0	0	0	0	0	0	0	0	0
3973753768639	397375	3768639	0	0	0	0	0	0	0	0	0	0	0	0	0	0	0
3974253768639	397425	3768639	0	0	0	0	0	0	0	0	0	0	0	0	0	0	0
3974753768639	397475	3768639	0	0	0	0	0	0	0	0	0	0	0	0	0	0	0
3975253768639	397525	3768639	0	0	0	0	0	0	0	0	0	0	0	0	0	0	0
3964253768689	396425	3768689	0	0	0	0	0	0	0	0	0	0	0	0	0	0	0
3964753768689	396475	3768689	0	0	0	0	0	0	0	0	0	0	0	0	0	0	0
3965253768689	396525	3768689	0	0	0	0	0	0	0	0	0	0	0	0	0	0	0
3965753768689	396575	3768689	0	0	0	0	0	0	0	0	0	0	0	0	0	0	0
3966253768689	396625	3768689	0	0	0	0	0	0	0	0	0	0	0	0	0	0	0
3966753768689	396675	3768689	0	0	0	0	0	0	0	0	0	0	0	0	0	0	0
3967253768689	396725	3768689	0	0	0	0	0	0	0	0	0	0	0	0	0	0	0
3967753768689	396775	3768689	0	0	0	0	0	0	0	0	0	0	0	0	0	0	0
3968253768689	396825	3768689	0	0	0	0	0	0	0	0	0	0	0	0	0	0	0
3968753768689	396875	3768689	0	0	0	0	0	0	0	0	0	0	0	0	0	0	0
3969253768689	396925	3768689	0	0	0	0	0	0	0	0	0	0	0	0	0	0	0
3969753768689	396975	3768689	0	0	0	0	0	0	0	0	0	0	0	0	0	0	0
3970253768689	397025	3768689	0	0	0	0	0	0	0	0	0	0	0	0	0	0	0
3970753768689	397075	3768689	0	0	0	0	0	0	0	0	0	0	0	0	0	0	0
3971253768689	397125	3768689	0	0	0	0	0	0	0	0	0	0	0	0	0	0	0
3971753768689	397175	3768689	0	0	0	0	0	0	0	0	0	0	0	0	0	0	0
3972253768689	397225	3768689	0	0	0	0	0	0	0	0	0	0	0	0	0	0	0
3972753768689	397275	3768689	0	0	0	0	0	0	0	0	0	0	0	0	0	0	0
3973253768689	397325	3768689	0	0	0	0	0	0	0	0	0	0	0	0	0	0	0
3973753768689	397375	3768689	0	0	0	0	0	0	0	0	0	0	0	0	0	0	0
3974253768689	397425	3768689	0	0	0	0	0	0	0	0	0	0	0	0	0	0	0
3974753768689	397475	3768689	0	0	0	0	0	0	0	0	0	0	0	0	0	0	0
3975253768689	397525	3768689	0	0	0	0	0	0	0	0	0	0	0	0	0	0	0

Garvey Reservoir Rehab - Mitigated Proposed Pump Station

Maximum Individual Non-Cancer Impact Calculations - Sensitive Receptors (Maximum Impacted Senior Residential Receptor) (IMPACT AT ALL OTHER LOCATIONS ON THE PROJECT SITE WOULD BE LESS THAN SHOWN)

Maximum Non-cancer Chronic Hazards / Toxicological Endpoints*

Receptor Group	Pollutant	CREL[1]	CONC	WFrac	$CONC_{WF}$	HI		ALIM	BN	CVS	DEV	ENDC	EYE	HEM	IMMUN	KIDN	NS	REPRO	RESP	SK
Project:																				
MEI - Max	DPM	5.00E+00	1.41E-02	1.00E+00	1.41E-02	0.003		-	-	-	-	-	-	-	-	-	-	-	2.82E-03	-
							Total Risk				-			-				-	0.003	
							Threshold				1.00			1.00				1.00	1.00	
							Over?				NO			NO				NO	NO	

Notes:

1. California Air Resources Board, "Consolidated Table of OEHHA/ARB Approved Risk Assessment Health Values," "OEHHA/ARB Approved Chronic Reference Exposure Levels and Target Organs," "OEHHA/ARB Approved Acute Reference Exposure Levels and Target Organs," and "OEHHA/ARB Approved 8-Hour Reference Exposure Levels and Target Organs," http://www.arb.ca.gov/toxics/healthval/healthval.htm. Tables last updated: May 8, 2018. Downloaded: 08/14/18.

Source: ESA, 2020

Where:

$CONC_{WF}$	Pollutant Concentration ($\mu g/m^3$) multiplied by the weight fraction
CREL	Chronic Reference Exposure Level
HI	Hazard Index
MEI	Maximally Exposed Individual
WFrac	Weight fraction of speciated component

* Key to Toxicological Endpoints

ALIM	Alimentary Tract	EYE	Eye	NS	Nervous System
BN	Bone	HEM	Hematologic System	REPRO	Reproductive System
CVS	Cardiovascular System	IMMUN	Immune System	RESP	Respiratory System
DEV	Developmental System	KIDN	Kidney	SK	Skin
ENDC	Endocrine System				

Chronic HI

Garvey Reservoir Rehab - Unmitigated Proposed Pump Station - 3rd Trimester Start

Cancer Risk Summary & Maximum Annual GLC for Chronic Calculations

Cancer Risk Summary

323

Max Risk: 6.540886

XY	X	Y	Offroad Risk	Haul Risk	Total Risk
7449041451	574490	4145130	0.008757509	0	0.008758
7448041451	574480	4145140	0.009682186	0	0.009682
7449041451	574490	4145140	0.011103146	0	0.011103
7449041451	574490	4145150	0.012613061	0	0.012613
7450041451	574500	4145150	0.014558394	0	0.014558
7446041451	574460	4145160	0.016330496	0	0.01633
7449041451	574490	4145160	0.01803237	0	0.018032
7450041451	574500	4145160	0.020017499	0	0.020017
7451041451	574510	4145160	0.022534025	0	0.022534
7446041451	574460	4145170	0.024448925	0	0.024449
7447041451	574470	4145170	0.025235486	0	0.025235
7448041451	574480	4145170	0.025034164	0	0.025034
7449041451	574490	4145170	0.025298691	0	0.025299
7450041451	574500	4145170	0.025095028	0	0.025095
7451041451	574510	4145170	0.023884755	0	0.023885
7452041451	574520	4145170	0.022250769	0	0.022251
7446041451	574460	4145180	0.019767017	0	0.019767
7447041451	574470	4145180	0.01769059	0	0.017691
7448041451	574480	4145180	0.009206973	0	0.009207
7449041451	574490	4145180	0.010117604	0	0.010118
7450041451	574500	4145180	0.011779681	0	0.01178
7451041451	574510	4145180	0.013636058	0	0.013636
7452041451	574520	4145180	0.015794418	0	0.015794
7453041451	574530	4145180	0.018144736	0	0.018145
7445041451	574450	4145190	0.020825128	0	0.020825
7446041451	574460	4145190	0.02394562	0	0.023946
7447041451	574470	4145190	0.027936947	0	0.027937
7448041451	574480	4145190	0.031516266	0	0.031516
7449041451	574490	4145190	0.033632488	0	0.033632
7450041451	574500	4145190	0.034018746	0	0.034019
7451041451	574510	4145190	0.033939153	0	0.033939
7452041451	574520	4145190	0.033644193	0	0.033644
7444041452	574440	4145200	0.031701201	0	0.031701
7445041452	574450	4145200	0.028746917	0	0.028747
7446041452	574460	4145200	0.025375943	0	0.025376
7447041452	574470	4145200	0.022054129	0	0.022054
7448041452	574480	4145200	0.009452773	0	0.009453
7449041452	574490	4145200	0.010581113	0	0.010581
7450041452	574500	4145200	0.012229144	0	0.012229
7451041452	574510	4145200	0.014382822	0	0.014383
7443041452	574430	4145210	0.017103011	0	0.017103
7444041452	574440	4145210	0.020424825	0	0.020425
7445041452	574450	4145210	0.023542976	0	0.023543
7446041452	574460	4145210	0.028739894	0	0.02874
7447041452	574470	4145210	0.034699963	0	0.0347
7448041452	574480	4145210	0.04104629	0	0.041046
7449041452	574490	4145210	0.046500713	0	0.046501
7450041452	574500	4145210	0.048836985	0	0.048837
7451041452	574510	4145210	0.048776121	0	0.048776
7443041452	574430	4145220	0.048204928	0	0.048205
7444041452	574440	4145220	0.044267443	0	0.044267
7445041452	574450	4145220	0.038843452	0	0.038843
7446041452	574460	4145220	0.032897429	0	0.032897
7447041452	574470	4145220	0.02745471	0	0.027455
7448041452	574480	4145220	0.009768802	0	0.009769
7449041452	574490	4145220	0.011011848	0	0.011012
7450041452	574500	4145220	0.012840134	0	0.01284
7451041452	574510	4145220	0.015279408	0	0.015279
7452041452	574520	4145220	0.018245397	0	0.018245
7453041452	574530	4145220	0.02151571	0	0.021516
7444041452	574440	4145230	0.026801584	0	0.026802
7445041452	574450	4145230	0.034587598	0	0.034588

Max GLC for Chronic Calcs

Max GLC: 0.073931

XY	X	Y	2025	2026	2027	2034	2035
57449041451	574490	4145130	0	0	0	9.898E-05	4.714E-05
57448041451	574480	4145140	0	0	0	0.0001094	5.211E-05
57449041451	574490	4145140	0	0	0	0.0001255	5.976E-05
57449041451	574490	4145150	0	0	0	0.0001426	6.789E-05
57450041451	574500	4145150	0	0	0	0.0001646	7.836E-05
57446041451	574460	4145160	0	0	0	0.0001846	8.79E-05
57449041451	574490	4145160	0	0	0	0.0002038	9.706E-05
57450041451	574500	4145160	0	0	0	0.0002263	0.0001077
57451041451	574510	4145160	0	0	0	0.0002547	0.0001213
57446041451	574460	4145170	0	0	0	0.0002763	0.0001316
57447041451	574470	4145170	0	0	0	0.0002852	0.0001358
57448041451	574480	4145170	0	0	0	0.000283	0.0001347
57449041451	574490	4145170	0	0	0	0.0002859	0.0001362
57450041451	574500	4145170	0	0	0	0.0002836	0.0001351
57451041451	574510	4145170	0	0	0	0.00027	0.0001286
57452041451	574520	4145170	0	0	0	0.0002515	0.0001198
57446041451	574460	4145180	0	0	0	0.0002234	0.0001064
57447041451	574470	4145180	0	0	0	0.0002	9.522E-05
57448041451	574480	4145180	0	0	0	0.0001041	4.955E-05
57449041451	574490	4145180	0	0	0	0.0001144	5.446E-05
57450041451	574500	4145180	0	0	0	0.0001331	6.34E-05
57451041451	574510	4145180	0	0	0	0.0001541	7.339E-05
57452041451	574520	4145180	0	0	0	0.0001785	8.501E-05
57453041451	574530	4145180	0	0	0	0.0002051	9.766E-05
57445041451	574450	4145190	0	0	0	0.0002354	0.0001121
57446041451	574460	4145190	0	0	0	0.0002707	0.0001289
57447041451	574470	4145190	0	0	0	0.0003158	0.0001504
57448041451	574480	4145190	0	0	0	0.0003562	0.0001696
57449041451	574490	4145190	0	0	0	0.0003801	0.000181
57450041451	574500	4145190	0	0	0	0.0003845	0.0001831
57451041451	574510	4145190	0	0	0	0.0003836	0.0001827
57452041451	574520	4145190	0	0	0	0.0003803	0.0001811
57444041452	574440	4145200	0	0	0	0.0003583	0.0001706
57445041452	574450	4145200	0	0	0	0.0003249	0.0001547
57446041452	574460	4145200	0	0	0	0.0002868	0.0001366
57447041452	574470	4145200	0	0	0	0.0002493	0.0001187
57448041452	574480	4145200	0	0	0	0.0001068	5.088E-05
57449041452	574490	4145200	0	0	0	0.0001196	5.695E-05
57450041452	574500	4145200	0	0	0	0.0001382	6.582E-05
57451041452	574510	4145200	0	0	0	0.0001626	7.741E-05
57443041452	574430	4145210	0	0	0	0.0001933	9.205E-05
57444041452	574440	4145210	0	0	0	0.0002309	0.0001099
57445041452	574450	4145210	0	0	0	0.0002661	0.0001267
57446041452	574460	4145210	0	0	0	0.0003248	0.0001547
57447041452	574470	4145210	0	0	0	0.0003922	0.0001868
57448041452	574480	4145210	0	0	0	0.0004639	0.0002209
57449041452	574490	4145210	0	0	0	0.0005256	0.0002503
57450041452	574500	4145210	0	0	0	0.000552	0.0002629
57451041452	574510	4145210	0	0	0	0.0005513	0.0002625
57443041452	574430	4145220	0	0	0	0.0005449	0.0002595
57444041452	574440	4145220	0	0	0	0.0005003	0.0002383
57445041452	574450	4145220	0	0	0	0.000439	0.0002091
57446041452	574460	4145220	0	0	0	0.0003718	0.0001771
57447041452	574470	4145220	0	0	0	0.0003103	0.0001478
57448041452	574480	4145220	0	0	0	0.0001104	5.258E-05
57449041452	574490	4145220	0	0	0	0.0001245	5.927E-05
57450041452	574500	4145220	0	0	0	0.0001451	6.911E-05
57451041452	574510	4145220	0	0	0	0.0001727	8.224E-05
57452041452	574520	4145220	0	0	0	0.0002062	9.82E-05
57453041452	574530	4145220	0	0	0	0.0002432	0.0001158
57444041452	574440	4145230	0	0	0	0.0003029	0.0001443
57445041452	574450	4145230	0	0	0	0.0003909	0.0001862

Garvey Reservoir Rehab - Unmitigated Proposed Pump Station - 3rd Trimester Start

Cancer Risk Summary & Maximum Annual GLC for Chronic Calculations

Cancer Risk Summary

323

Max Risk: 6.540886

XY	X	Y	Offroad Risk	Haul Risk	Total Risk
7446041452	574460	4145230	0.044695838	0	0.044696
7447041452	574470	4145230	0.055674912	0	0.055675
7448041452	574480	4145230	0.067271999	0	0.067272
7449041452	574490	4145230	0.077176576	0	0.077177
7450041452	574500	4145230	0.077665836	0	0.077666
7451041452	574510	4145230	0.07600844	0	0.076008
7452041452	574520	4145230	0.06651353	0	0.066514
7444041452	574440	4145240	0.054726826	0	0.054727
7445041452	574450	4145240	0.043555793	0	0.043556
7446041452	574460	4145240	0.034238795	0	0.034239
7447041452	574470	4145240	0.009958419	0	0.009958
7448041452	574480	4145240	0.011489403	0	0.011489
7449041452	574490	4145240	0.013329393	0	0.013329
7450041452	574500	4145240	0.015822509	0	0.015823
7451041452	574510	4145240	0.018821271	0	0.018821
7445041452	574450	4145250	0.023147355	0	0.023147
7446041452	574460	4145250	0.030123398	0	0.030123
7447041452	574470	4145250	0.040425937	0	0.040426
7448041452	574480	4145250	0.055379952	0	0.05538
7446041452	574460	4145260	0.076193376	0	0.076193
7447041452	574470	4145260	0.102711704	0	0.102712
7448041452	574480	4145260	0.132416071	0	0.132416
7447041452	574470	4145270	0.143692447	0	0.143692
7449041451	574490	4145130	0.136742155	0	0.136742
7448041451	574480	4145140	0.109952275	0	0.109952
7449041451	574490	4145140	0.080781646	0	0.080782
7449041451	574490	4145150	0.058633879	0	0.058634
7450041451	574500	4145150	0.043118034	0	0.043118
7446041451	574460	4145160	0.010061421	0	0.010061
7449041451	574490	4145160	0.01165327	0	0.011653
7450041451	574500	4145160	0.013650104	0	0.01365
7451041451	574510	4145160	0.01614322	0	0.016143
7446041451	574460	4145170	0.019436942	0	0.019437
7447041451	574470	4145170	0.302137588	0	0.302138
7448041451	574480	4145170	0.203861992	0	0.203862
7449041451	574490	4145170	0.123312101	0	0.123312
7450041451	574500	4145170	0.078356417	0	0.078356
7451041451	574510	4145170	0.052795539	0	0.052796
7452041451	574520	4145170	0.010021625	0	0.010022
7446041451	574460	4145180	0.011660293	0	0.01166
7447041451	574470	4145180	0.0136899	0	0.01369
7448041451	574480	4145180	0.016190039	0	0.01619
7449041451	574490	4145180	1.081937506	0	1.081938
7450041451	574500	4145180	0.383783046	0	0.383783
7451041451	574510	4145180	0.174321492	0	0.174321
7452041451	574520	4145180	0.099834672	0	0.099835
7453041451	574530	4145180	0.060925673	0	0.060926
7445041451	574450	4145190	0.010103558	0	0.010104
7446041451	574460	4145190	0.011568995	0	0.011569
7447041451	574470	4145190	0.013575193	0	0.013575
7448041451	574480	4145190	0.016253245	0	0.016253
7449041451	574490	4145190	5.635039481	0	5.635039
7450041451	574500	4145190	0.698861428	0	0.698861
7451041451	574510	4145190	0.247956204	0	0.247956
7452041451	574520	4145190	0.124112707	0	0.124113
7444041452	574440	4145200	0.072162253	0	0.072162
7445041452	574450	4145200	0.010014602	0	0.010015
7446041452	574460	4145200	0.01150579	0	0.011506
7447041452	574470	4145200	0.013479214	0	0.013479
7448041452	574480	4145200	0.01599574	0	0.015996
7449041452	574490	4145200	2.145950326	0	2.14595
7450041452	574500	4145200	0.709250583	0	0.709251

Max GLC for Chronic Calcs

Max GLC: 0.073931

XY	X	Y	2025	2026	2027	2034	2035
57446041452	574460	4145230	0	0	0	0.0005052	0.0002406
57447041452	574470	4145230	0	0	0	0.0006293	0.0002997
57448041452	574480	4145230	0	0	0	0.0007604	0.0003621
57449041452	574490	4145230	0	0	0	0.0008723	0.0004154
57450041452	574500	4145230	0	0	0	0.0008778	0.000418
57451041452	574510	4145230	0	0	0	0.0008591	0.0004091
57452041452	574520	4145230	0	0	0	0.0007518	0.000358
57444041452	574440	4145240	0	0	0	0.0006186	0.0002946
57445041452	574450	4145240	0	0	0	0.0004923	0.0002344
57446041452	574460	4145240	0	0	0	0.000387	0.0001843
57447041452	574470	4145240	0	0	0	0.0001126	5.36E-05
57448041452	574480	4145240	0	0	0	0.0001299	6.184E-05
57449041452	574490	4145240	0	0	0	0.0001507	7.174E-05
57450041452	574500	4145240	0	0	0	0.0001788	8.516E-05
57451041452	574510	4145240	0	0	0	0.0002127	0.0001013
57445041452	574450	4145250	0	0	0	0.0002616	0.0001246
57446041452	574460	4145250	0	0	0	0.0003405	0.0001621
57447041452	574470	4145250	0	0	0	0.0004569	0.0002176
57448041452	574480	4145250	0	0	0	0.000626	0.0002981
57446041452	574460	4145260	0	0	0	0.0008612	0.0004101
57447041452	574470	4145260	0	0	0	0.0011609	0.0005528
57448041452	574480	4145260	0	0	0	0.0014967	0.0007127
57447041452	574470	4145270	0	0	0	0.0016241	0.0007734
57449041451	574490	4145130	0	0	0	0.0015456	0.000736
57448041451	574480	4145140	0	0	0	0.0012428	0.0005918
57449041451	574490	4145140	0	0	0	0.0009131	0.0004348
57449041451	574490	4145150	0	0	0	0.0006627	0.0003156
57450041451	574500	4145150	0	0	0	0.0004874	0.0002321
57446041451	574460	4145160	0	0	0	0.0001137	5.415E-05
57449041451	574490	4145160	0	0	0	0.0001317	6.272E-05
57450041451	574500	4145160	0	0	0	0.0001543	7.347E-05
57451041451	574510	4145160	0	0	0	0.0001825	8.689E-05
57446041451	574460	4145170	0	0	0	0.0002197	0.0001046
57447041451	574470	4145170	0	0	0	0.003415	0.0016262
57448041451	574480	4145170	0	0	0	0.0023042	0.0010972
57449041451	574490	4145170	0	0	0	0.0013938	0.0006637
57450041451	574500	4145170	0	0	0	0.0008856	0.0004217
57451041451	574510	4145170	0	0	0	0.0005967	0.0002842
57452041451	574520	4145170	0	0	0	0.0001133	5.394E-05
57446041451	574460	4145180	0	0	0	0.0001318	6.276E-05
57447041451	574470	4145180	0	0	0	0.0001547	7.368E-05
57448041451	574480	4145180	0	0	0	0.000183	8.714E-05
57449041451	574490	4145180	0	0	0	0.012229	0.0058233
57450041451	574500	4145180	0	0	0	0.0043378	0.0020656
57451041451	574510	4145180	0	0	0	0.0019703	0.0009383
57452041451	574520	4145180	0	0	0	0.0011284	0.0005373
57453041451	574530	4145180	0	0	0	0.0006886	0.0003279
57445041451	574450	4145190	0	0	0	0.0001142	5.438E-05
57446041451	574460	4145190	0	0	0	0.0001308	6.227E-05
57447041451	574470	4145190	0	0	0	0.0001534	7.307E-05
57448041451	574480	4145190	0	0	0	0.0001837	8.748E-05
57449041451	574490	4145190	0	0	0	0.0636919	0.0303295
57450041451	574500	4145190	0	0	0	0.0078991	0.0037615
57451041451	574510	4145190	0	0	0	0.0028026	0.0013346
57452041451	574520	4145190	0	0	0	0.0014028	0.000668
57444041452	574440	4145200	0	0	0	0.0008156	0.0003884
57445041452	574450	4145200	0	0	0	0.0001132	5.39E-05
57446041452	574460	4145200	0	0	0	0.00013	6.193E-05
57447041452	574470	4145200	0	0	0	0.0001524	7.255E-05
57448041452	574480	4145200	0	0	0	0.0001808	8.609E-05
57449041452	574490	4145200	0	0	0	0.0242553	0.0115502
57450041452	574500	4145200	0	0	0	0.0080165	0.0038174

Garvey Reservoir Rehab - Unmitigated Proposed Pump Station - 3rd Trimester Start

Cancer Risk Summary & Maximum Annual GLC for Chronic Calculations

Cancer Risk Summary

323

Max Risk: 6.540886

XY	X	Y	Offroad Risk	Haul Risk	Total Risk
7451041452(	574510	4145200	0.279814249	0	0.279814
7443041452:	574430	4145210	0.144905062	0	0.144905
7444041452:	574440	4145210	0.081336452	0	0.081336
7445041452:	574450	4145210	0.009836689	0	0.009837
7446041452:	574460	4145210	0.011215511	0	0.011216
7447041452:	574470	4145210	0.013099979	0	0.0131
7448041452:	574480	4145210	0.015511162	0	0.015511
7449041452:	574490	4145210	0.603654823	0	0.603655
7450041452:	574500	4145210	0.708784733	0	0.708785
7451041452:	574510	4145210	0.480853051	0	0.480853
7443041452:	574430	4145220	0.252539793	0	0.25254
7444041452:	574440	4145220	0.142353422	0	0.142353
7445041452:	574450	4145220	0.090009687	0	0.09001
7446041452:	574460	4145220	0.009501933	0	0.009502
7447041452:	574470	4145220	0.010890119	0	0.01089
7448041452:	574480	4145220	0.012627107	0	0.012627
7449041452:	574490	4145220	0.014869741	0	0.01487
7450041452:	574500	4145220	0.182563991	0	0.182564
7451041452:	574510	4145220	0.282202023	0	0.282202
7452041452:	574520	4145220	0.340501145	0	0.340501
7453041452:	574530	4145220	0.297404179	0	0.297404
7444041452:	574440	4145230	0.207134646	0	0.207135
7445041452:	574450	4145230	0.134209242	0	0.134209
7446041452:	574460	4145230	0.091950338	0	0.09195
7447041452:	574470	4145230	0.009162495	0	0.009162
7448041452:	574480	4145230	0.010503861	0	0.010504
7449041452:	574490	4145230	0.012102733	0	0.012103
7450041452:	574500	4145230	0.014064453	0	0.014064
7451041452:	574510	4145230	0.07939346	0	0.079393
7452041452:	574520	4145230	0.117890451	0	0.11789
7444041452(	574440	4145240	0.162354534	0	0.162355
7445041452(	574450	4145240	0.191960581	0	0.191961
7446041452(	574460	4145240	0.182149642	0	0.18215
7447041452(	574470	4145240	0.146232383	0	0.146232
7448041452(	574480	4145240	0.112649055	0	0.112649
7449041452(	574490	4145240	0.081322406	0	0.081322
7450041452(	574500	4145240	0.008799647	0	0.0088
7451041452(	574510	4145240	0.009635367	0	0.009635
7445041452!	574450	4145250	0.01131149	0	0.011311
7446041452!	574460	4145250	0.013188936	0	0.013189
7447041452!	574470	4145250	0.015490094	0	0.01549
7448041452!	574480	4145250	0.027555371	0	0.027555
7446041452(	574460	4145260	0.03483808	0	0.034838
7447041452(	574470	4145260	0.044943979	0	0.044944
7448041452(	574480	4145260	0.060129748	0	0.06013
7447041452:	574470	4145270	0.080240885	0	0.080241
7449041451:	574490	4145130	0.104280143	0	0.10428
7448041451(	574480	4145140	0.120666822	0	0.120667
7449041451(	574490	4145140	0.12188646	0	0.121886
7449041451!	574490	4145150	0.107480228	0	0.10748
7450041451!	574500	4145150	0.086245433	0	0.086245
7446041451(	574460	4145160	0.067925126	0	0.067925
7449041451(	574490	4145160	0.008380616	0	0.008381
7450041451(	574500	4145160	0.009448091	0	0.009448
7451041451(	574510	4145160	0.010677092	0	0.010677
7446041451:	574460	4145170	0.012259577	0	0.01226
7447041451:	574470	4145170	0.01420491	0	0.014205
7448041451:	574480	4145170	0.016623115	0	0.016623
7449041451:	574490	4145170	0.019687424	0	0.019687
7450041451:	574500	4145170	0.023784094	0	0.023784
7451041451:	574510	4145170	0.029231494	0	0.029231
7452041451:	574520	4145170	0.0366055	0	0.036606

Max GLC for Chronic Calcs

Max GLC: 0.073931

XY	X	Y	2025	2026	2027	2034	2035
57451041452(	574510	4145200	0	0	0	0.0031627	0.001506
57443041452:	574430	4145210	0	0	0	0.0016378	0.0007799
57444041452:	574440	4145210	0	0	0	0.0009193	0.0004378
57445041452:	574450	4145210	0	0	0	0.0001112	5.294E-05
57446041452:	574460	4145210	0	0	0	0.0001268	6.037E-05
57447041452:	574470	4145210	0	0	0	0.0001481	7.051E-05
57448041452:	574480	4145210	0	0	0	0.0001753	8.349E-05
57449041452:	574490	4145210	0	0	0	0.006823	0.0032491
57450041452:	574500	4145210	0	0	0	0.0080113	0.0038149
57451041452:	574510	4145210	0	0	0	0.005435	0.0025881
57443041452:	574430	4145220	0	0	0	0.0028544	0.0013592
57444041452:	574440	4145220	0	0	0	0.001609	0.0007662
57445041452:	574450	4145220	0	0	0	0.0010174	0.0004845
57446041452:	574460	4145220	0	0	0	0.0001074	5.114E-05
57447041452:	574470	4145220	0	0	0	0.0001231	5.861E-05
57448041452:	574480	4145220	0	0	0	0.0001427	6.796E-05
57449041452:	574490	4145220	0	0	0	0.0001681	8.003E-05
57450041452:	574500	4145220	0	0	0	0.0020635	0.0009826
57451041452:	574510	4145220	0	0	0	0.0031897	0.0015189
57452041452:	574520	4145220	0	0	0	0.0038486	0.0018327
57453041452:	574530	4145220	0	0	0	0.0033615	0.0016007
57444041452:	574440	4145230	0	0	0	0.0023412	0.0011149
57445041452:	574450	4145230	0	0	0	0.0015169	0.0007224
57446041452:	574460	4145230	0	0	0	0.0010393	0.0004949
57447041452:	574470	4145230	0	0	0	0.0001036	4.932E-05
57448041452:	574480	4145230	0	0	0	0.0001187	5.653E-05
57449041452:	574490	4145230	0	0	0	0.0001368	6.514E-05
57450041452:	574500	4145230	0	0	0	0.000159	7.57E-05
57451041452:	574510	4145230	0	0	0	0.0008974	0.0004273
57452041452:	574520	4145230	0	0	0	0.0013325	0.0006345
57444041452(	574440	4145240	0	0	0	0.0018351	0.0008738
57445041452(	574450	4145240	0	0	0	0.0021697	0.0010332
57446041452(	574460	4145240	0	0	0	0.0020588	0.0009804
57447041452(	574470	4145240	0	0	0	0.0016528	0.0007871
57448041452(	574480	4145240	0	0	0	0.0012733	0.0006063
57449041452(	574490	4145240	0	0	0	0.0009192	0.0004377
57450041452(	574500	4145240	0	0	0	9.946E-05	4.736E-05
57451041452(	574510	4145240	0	0	0	0.0001089	5.186E-05
57445041452!	574450	4145250	0	0	0	0.0001279	6.088E-05
57446041452!	574460	4145250	0	0	0	0.0001491	7.099E-05
57447041452!	574470	4145250	0	0	0	0.0001751	8.337E-05
57448041452!	574480	4145250	0	0	0	0.0003115	0.0001483
57446041452(	574460	4145260	0	0	0	0.0003938	0.0001875
57447041452(	574470	4145260	0	0	0	0.000508	0.0002419
57448041452(	574480	4145260	0	0	0	0.0006796	0.0003236
57447041452:	574470	4145270	0	0	0	0.0009069	0.0004319
57449041451:	574490	4145130	0	0	0	0.0011787	0.0005613
57448041451(	574480	4145140	0	0	0	0.0013639	0.0006495
57449041451(	574490	4145140	0	0	0	0.0013777	0.000656
57449041451!	574490	4145150	0	0	0	0.0012148	0.0005785
57450041451!	574500	4145150	0	0	0	0.0009748	0.0004642
57446041451(	574460	4145160	0	0	0	0.0007677	0.0003656
57449041451(	574490	4145160	0	0	0	9.472E-05	4.511E-05
57450041451(	574500	4145160	0	0	0	0.0001068	5.085E-05
57451041451(	574510	4145160	0	0	0	0.0001207	5.747E-05
57446041451:	574460	4145170	0	0	0	0.0001386	6.598E-05
57447041451:	574470	4145170	0	0	0	0.0001606	7.646E-05
57448041451:	574480	4145170	0	0	0	0.0001879	8.947E-05
57449041451:	574490	4145170	0	0	0	0.0002225	0.000106
57450041451:	574500	4145170	0	0	0	0.0002688	0.000128
57451041451:	574510	4145170	0	0	0	0.0003304	0.0001573
57452041451:	574520	4145170	0	0	0	0.0004137	0.000197

Garvey Reservoir Rehab - Unmitigated Proposed Pump Station - 3rd Trimester Start

Cancer Risk Summary & Maximum Annual GLC for Chronic Calculations

Cancer Risk Summary

323

Max Risk: 6.540886

XY	X	Y	Offroad Risk	Haul Risk	Total Risk
7446041451	574460	4145180	0.046032522	0	0.046033
7447041451	574470	4145180	0.072195026	0	0.072195
7448041451	574480	4145180	0.082464792	0	0.082465
7449041451	574490	4145180	0.085215413	0	0.085215
7450041451	574500	4145180	0.079615851	0	0.079616
7451041451	574510	4145180	0.068128789	0	0.068129
7452041451	574520	4145180	0.056519997	0	0.05652
7453041451	574530	4145180	0.008003722	0	0.008004
7445041451	574450	4145190	0.008909671	0	0.00891
7446041451	574460	4145190	0.010075467	0	0.010075
7447041451	574470	4145190	0.011386401	0	0.011386
7448041451	574480	4145190	0.012938454	0	0.012938
7449041451	574490	4145190	0.014930606	0	0.014931
7450041451	574500	4145190	0.017475223	0	0.017475
7451041451	574510	4145190	0.020724467	0	0.020724
7452041451	574520	4145190	0.024832842	0	0.024833
7444041452	574440	4145200	0.030057851	0	0.030058
7445041452	574450	4145200	0.036319904	0	0.03632
7446041452	574460	4145200	0.044375127	0	0.044375
7447041452	574470	4145200	0.052449078	0	0.052449
7448041452	574480	4145200	0.058624515	0	0.058625
7449041452	574490	4145200	0.061152745	0	0.061153
7450041452	574500	4145200	0.059198048	0	0.059198
7451041452	574510	4145200	0.053537621	0	0.053538
7443041452	574430	4145210	0.046549873	0	0.04655
7444041452	574440	4145210	0.007549577	0	0.00755
7445041452	574450	4145210	0.008406366	0	0.008406
7446041452	574460	4145210	0.009331043	0	0.009331
7447041452	574470	4145210	0.010569408	0	0.010569
7448041452	574480	4145210	0.011915457	0	0.011915
7449041452	574490	4145210	0.013526033	0	0.013526
7450041452	574500	4145210	0.015642256	0	0.015642
7451041452	574510	4145210	0.018495879	0	0.018496
7443041452	574430	4145220	0.021644462	0	0.021644
7444041452	574440	4145220	0.025207394	0	0.025207
7445041452	574450	4145220	0.029561569	0	0.029562
7446041452	574460	4145220	0.034826375	0	0.034826
7447041452	574470	4145220	0.039826653	0	0.039827
7448041452	574480	4145220	0.044054416	0	0.044054
7449041452	574490	4145220	0.046254913	0	0.046255
7450041452	574500	4145220	0.04541217	0	0.045412
7451041452	574510	4145220	0.042493	0	0.042493
7452041452	574520	4145220	0.038438467	0	0.038438
7453041452	574530	4145220	0.014593508	0	0.014594
7444041452	574440	4145230	0.015927852	0	0.015928
7445041452	574450	4145230	0.017294969	0	0.017295
7446041452	574460	4145230	0.019074094	0	0.019074
7447041452	574470	4145230	0.020637852	0	0.020638
7448041452	574480	4145230	0.022927305	0	0.022927
7449041452	574490	4145230	0.026270187	0	0.02627
7450041452	574500	4145230	0.02939302	0	0.029393
7451041452	574510	4145230	0.033908721	0	0.033909
7452041452	574520	4145230	0.039346757	0	0.039347
7444041452	574440	4145240	0.045400465	0	0.0454
7445041452	574450	4145240	0.052486533	0	0.052487
7446041452	574460	4145240	0.060504301	0	0.060504
7447041452	574470	4145240	0.069175195	0	0.069175
7448041452	574480	4145240	0.078506238	0	0.078506
7449041452	574490	4145240	0.088539568	0	0.08854
7450041452	574500	4145240	0.098048524	0	0.098049
7451041452	574510	4145240	0.107218041	0	0.107218
7445041452	574450	4145250	0.110825451	0	0.110825

Max GLC for Chronic Calcs

Max GLC: 0.073931

XY	X	Y	2025	2026	2027	2034	2035
574460414518	574460	4145180	0	0	0	0.0005203	0.0002478
574470414518	574470	4145180	0	0	0	0.000816	0.0003886
574480414518	574480	4145180	0	0	0	0.0009321	0.0004439
574490414518	574490	4145180	0	0	0	0.0009632	0.0004587
574500414518	574500	4145180	0	0	0	0.0008999	0.0004285
574510414518	574510	4145180	0	0	0	0.00077	0.0003667
574520414518	574520	4145180	0	0	0	0.0006388	0.0003042
574530414518	574530	4145180	0	0	0	9.046E-05	4.308E-05
574450414519	574450	4145190	0	0	0	0.0001007	4.795E-05
574460414519	574460	4145190	0	0	0	0.0001139	5.423E-05
574470414519	574470	4145190	0	0	0	0.0001287	6.129E-05
574480414519	574480	4145190	0	0	0	0.0001462	6.964E-05
574490414519	574490	4145190	0	0	0	0.0001688	8.036E-05
574500414519	574500	4145190	0	0	0	0.0001975	9.406E-05
574510414519	574510	4145190	0	0	0	0.0002342	0.0001115
574520414519	574520	4145190	0	0	0	0.0002807	0.0001337
574440414520	574440	4145200	0	0	0	0.0003397	0.0001618
574450414520	574450	4145200	0	0	0	0.0004105	0.0001955
574460414520	574460	4145200	0	0	0	0.0005016	0.0002388
574470414520	574470	4145200	0	0	0	0.0005928	0.0002823
574480414520	574480	4145200	0	0	0	0.0006626	0.0003155
574490414520	574490	4145200	0	0	0	0.0006912	0.0003291
574500414520	574500	4145200	0	0	0	0.0006691	0.0003186
574510414520	574510	4145200	0	0	0	0.0006051	0.0002882
574430414521	574430	4145210	0	0	0	0.0005261	0.0002505
574440414521	574440	4145210	0	0	0	8.533E-05	4.063E-05
574450414521	574450	4145210	0	0	0	9.502E-05	4.525E-05
574460414521	574460	4145210	0	0	0	0.0001055	5.022E-05
574470414521	574470	4145210	0	0	0	0.0001195	5.689E-05
574480414521	574480	4145210	0	0	0	0.0001347	6.413E-05
574490414521	574490	4145210	0	0	0	0.0001529	7.28E-05
574500414521	574500	4145210	0	0	0	0.0001768	8.419E-05
574510414521	574510	4145210	0	0	0	0.0002091	9.955E-05
574430414522	574430	4145220	0	0	0	0.0002446	0.0001165
574440414522	574440	4145220	0	0	0	0.0002849	0.0001357
574450414522	574450	4145220	0	0	0	0.0003341	0.0001591
574460414522	574460	4145220	0	0	0	0.0003936	0.0001874
574470414522	574470	4145220	0	0	0	0.0004502	0.0002144
574480414522	574480	4145220	0	0	0	0.0004979	0.0002371
574490414522	574490	4145220	0	0	0	0.0005228	0.000249
574500414522	574500	4145220	0	0	0	0.0005133	0.0002444
574510414522	574510	4145220	0	0	0	0.0004803	0.0002287
574520414522	574520	4145220	0	0	0	0.0004345	0.0002069
574530414522	574530	4145220	0	0	0	0.0001649	7.855E-05
574440414523	574440	4145230	0	0	0	0.00018	8.573E-05
574450414523	574450	4145230	0	0	0	0.0001955	9.309E-05
574460414523	574460	4145230	0	0	0	0.0002156	0.0001027
574470414523	574470	4145230	0	0	0	0.0002333	0.0001111
574480414523	574480	4145230	0	0	0	0.0002591	0.0001234
574490414523	574490	4145230	0	0	0	0.0002969	0.0001414
574500414523	574500	4145230	0	0	0	0.0003322	0.0001582
574510414523	574510	4145230	0	0	0	0.0003833	0.0001825
574520414523	574520	4145230	0	0	0	0.0004447	0.0002118
574440414524	574440	4145240	0	0	0	0.0005132	0.0002444
574450414524	574450	4145240	0	0	0	0.0005932	0.0002825
574460414524	574460	4145240	0	0	0	0.0006839	0.0003257
574470414524	574470	4145240	0	0	0	0.0007819	0.0003723
574480414524	574480	4145240	0	0	0	0.0008873	0.0004225
574490414524	574490	4145240	0	0	0	0.0010007	0.0004765
574500414524	574500	4145240	0	0	0	0.0011082	0.0005277
574510414524	574510	4145240	0	0	0	0.0012119	0.0005771
574450414525	574450	4145250	0	0	0	0.0012526	0.0005965

Garvey Reservoir Rehab - Unmitigated Proposed Pump Station - 3rd Trimester Start

Cancer Risk Summary & Maximum Annual GLC for Chronic Calculations

Cancer Risk Summary

323

Max Risk: 6.540886

XY	X	Y	Offroad Risk	Haul Risk	Total Risk
7446041452	574460	4145250	0.110567946	0	0.110568
7447041452	574470	4145250	0.10812399	0	0.108124
7448041452	574480	4145250	0.105736217	0	0.105736
7446041452	574460	4145260	0.097540536	0	0.097541
7447041452	574470	4145260	0.014813558	0	0.014814
7448041452	574480	4145260	0.016112787	0	0.016113
7447041452	574470	4145270	0.017529065	0	0.017529
7449041451	574490	4145130	0.019158369	0	0.019158
7448041451	574480	4145140	0.021230113	0	0.02123
7449041451	574490	4145140	0.023856664	0	0.023857
7449041451	574490	4145150	0.02740555	0	0.027406
7450041451	574500	4145150	0.03118385	0	0.031184
7446041451	574460	4145160	0.036146673	0	0.036147
7449041451	574490	4145160	0.042113765	0	0.042114
7450041451	574500	4145160	0.049300494	0	0.0493
7451041451	574510	4145160	0.05829444	0	0.058294
7446041451	574460	4145170	0.068929395	0	0.068929
7447041451	574470	4145170	0.081219404	0	0.081219
7448041451	574480	4145170	0.095206605	0	0.095207
7449041451	574490	4145170	0.110933135	0	0.110933
7450041451	574500	4145170	0.127078696	0	0.127079
7451041451	574510	4145170	0.144368983	0	0.144369
7452041451	574520	4145170	0.154755797	0	0.154756
7446041451	574460	4145180	0.155961388	0	0.155961
7447041451	574470	4145180	0.151235002	0	0.151235
7448041451	574480	4145180	0.146173859	0	0.146174
7449041451	574490	4145180	0.131250276	0	0.13125
7450041451	574500	4145180	0.01499147	0	0.014991
7451041451	574510	4145180	0.016377315	0	0.016377
7452041451	574520	4145180	0.017699954	0	0.0177
7453041451	574530	4145180	0.019535262	0	0.019535
7445041451	574450	4145190	0.021756828	0	0.021757
7446041451	574460	4145190	0.025013095	0	0.025013
7447041451	574470	4145190	0.028512822	0	0.028513
7448041451	574480	4145190	0.032726539	0	0.032727
7449041451	574490	4145190	0.038019436	0	0.038019
7450041451	574500	4145190	0.044670087	0	0.04467
7451041451	574510	4145190	0.053010907	0	0.053011
7452041451	574520	4145190	0.063856547	0	0.063857
7444041452	574440	4145200	0.077511333	0	0.077511
7445041452	574450	4145200	0.093984627	0	0.093985
7446041452	574460	4145200	0.113959989	0	0.11396
7447041452	574470	4145200	0.140443203	0	0.140443
7448041452	574480	4145200	0.17210929	0	0.172109
7449041452	574490	4145200	0.20353894	0	0.203539
7450041452	574500	4145200	0.22856374	0	0.228564
7451041452	574510	4145200	0.236874127	0	0.236874
7443041452	574430	4145210	0.208630516	0	0.208631
7444041452	574440	4145210	0.184593598	0	0.184594
7445041452	574450	4145210	0.015106177	0	0.015106
7446041452	574460	4145210	0.016297723	0	0.016298
7447041452	574470	4145210	0.017912981	0	0.017913
7448041452	574480	4145210	0.01997068	0	0.019971
7449041452	574490	4145210	0.337612407	0	0.337612
7450041452	574500	4145210	0.273084006	0	0.273084
7451041452	574510	4145210	0.015176406	0	0.015176
7443041452	574430	4145220	0.016398384	0	0.016398
7444041452	574440	4145220	0.018104939	0	0.018105
7445041452	574450	4145220	0.598865231	0	0.598865
7446041452	574460	4145220	0.423504356	0	0.423504
7447041452	574470	4145220	0.01506404	0	0.015064
7448041452	574480	4145220	0.016470953	0	0.016471

Max GLC for Chronic Calcs

Max GLC: 0.073931

XY	X	Y	2025	2026	2027	2034	2035
57446041452	574460	4145250	0	0	0	0.0012497	0.0005951
57447041452	574470	4145250	0	0	0	0.0012221	0.000582
57448041452	574480	4145250	0	0	0	0.0011951	0.0005691
57446041452	574460	4145260	0	0	0	0.0011025	0.000525
57447041452	574470	4145260	0	0	0	0.0001674	7.973E-05
57448041452	574480	4145260	0	0	0	0.0001821	8.672E-05
57447041452	574470	4145270	0	0	0	0.0001981	9.435E-05
57449041451	574490	4145130	0	0	0	0.0002165	0.0001031
57448041451	574480	4145140	0	0	0	0.00024	0.0001143
57449041451	574490	4145140	0	0	0	0.0002696	0.0001284
57449041451	574490	4145150	0	0	0	0.0003098	0.0001475
57450041451	574500	4145150	0	0	0	0.0003525	0.0001678
57446041451	574460	4145160	0	0	0	0.0004086	0.0001946
57449041451	574490	4145160	0	0	0	0.000476	0.0002267
57450041451	574500	4145160	0	0	0	0.0005572	0.0002654
57451041451	574510	4145160	0	0	0	0.0006589	0.0003138
57446041451	574460	4145170	0	0	0	0.0007791	0.000371
57447041451	574470	4145170	0	0	0	0.000918	0.0004371
57448041451	574480	4145170	0	0	0	0.0010761	0.0005124
57449041451	574490	4145170	0	0	0	0.0012539	0.0005971
57450041451	574500	4145170	0	0	0	0.0014363	0.000684
57451041451	574510	4145170	0	0	0	0.0016318	0.000777
57452041451	574520	4145170	0	0	0	0.0017492	0.0008329
57446041451	574460	4145180	0	0	0	0.0017628	0.0008394
57447041451	574470	4145180	0	0	0	0.0017094	0.000814
57448041451	574480	4145180	0	0	0	0.0016522	0.0007868
57449041451	574490	4145180	0	0	0	0.0014835	0.0007064
57450041451	574500	4145180	0	0	0	0.0001694	8.069E-05
57451041451	574510	4145180	0	0	0	0.0001851	8.815E-05
57452041451	574520	4145180	0	0	0	0.0002001	9.527E-05
57453041451	574530	4145180	0	0	0	0.0002208	0.0001051
57445041451	574450	4145190	0	0	0	0.0002459	0.0001171
57446041451	574460	4145190	0	0	0	0.0002827	0.0001346
57447041451	574470	4145190	0	0	0	0.0003223	0.0001535
57448041451	574480	4145190	0	0	0	0.0003699	0.0001761
57449041451	574490	4145190	0	0	0	0.0004297	0.0002046
57450041451	574500	4145190	0	0	0	0.0005049	0.0002404
57451041451	574510	4145190	0	0	0	0.0005992	0.0002853
57452041451	574520	4145190	0	0	0	0.0007218	0.0003437
57444041452	574440	4145200	0	0	0	0.0008761	0.0004172
57445041452	574450	4145200	0	0	0	0.0010623	0.0005059
57446041452	574460	4145200	0	0	0	0.0012881	0.0006134
57447041452	574470	4145200	0	0	0	0.0015874	0.0007559
57448041452	574480	4145200	0	0	0	0.0019453	0.0009263
57449041452	574490	4145200	0	0	0	0.0023006	0.0010955
57450041452	574500	4145200	0	0	0	0.0025834	0.0012302
57451041452	574510	4145200	0	0	0	0.0026773	0.0012749
57443041452	574430	4145210	0	0	0	0.0023581	0.0011229
57444041452	574440	4145210	0	0	0	0.0020864	0.0009935
57445041452	574450	4145210	0	0	0	0.0001707	8.131E-05
57446041452	574460	4145210	0	0	0	0.0001842	8.772E-05
57447041452	574470	4145210	0	0	0	0.0002025	9.641E-05
57448041452	574480	4145210	0	0	0	0.0002257	0.0001075
57449041452	574490	4145210	0	0	0	0.003816	0.0018171
57450041452	574500	4145210	0	0	0	0.0030866	0.0014698
57451041452	574510	4145210	0	0	0	0.0001715	8.168E-05
57443041452	574430	4145220	0	0	0	0.0001853	8.826E-05
57444041452	574440	4145220	0	0	0	0.0002046	9.745E-05
57445041452	574450	4145220	0	0	0	0.0067689	0.0032233
57446041452	574460	4145220	0	0	0	0.0047868	0.0022794
57447041452	574470	4145220	0	0	0	0.0001703	8.108E-05
57448041452	574480	4145220	0	0	0	0.0001862	8.865E-05

Garvey Reservoir Rehab - Unmitigated Proposed Pump Station - 3rd Trimester Start

Cancer Risk Summary & Maximum Annual GLC for Chronic Calculations

Cancer Risk Summary

323

Max Risk: 6.540886

XY	X	Y	Offroad Risk	Haul Risk	Total Risk
7449041452	574490	4145220	1.127932573	0	1.127933
7450041452	574500	4145220	0.638684861	0	0.638685
7451041452	574510	4145220	0.015047653	0	0.015048
7452041452	574520	4145220	0.016517772	0	0.016518
7453041452	574530	4145220	2.739534365	0	2.739534
7444041452	574440	4145230	1.054508546	0	1.054509
7445041452	574450	4145230	0.015019562	0	0.01502
7446041452	574460	4145230	0.016513091	0	0.016513
7447041452	574470	4145230	4.498932296	0	4.498932
7448041452	574480	4145230	1.360394002	0	1.360394
7449041452	574490	4145230	0.015071063	0	0.015071
7450041452	574500	4145230	0.01638902	0	0.016389
7451041452	574510	4145230	6.540885735	0	6.540886
7452041452	574520	4145230	3.103011974	0	3.103012
7444041452	574440	4145240	1.341699142	0	1.341699
7445041452	574450	4145240	0.014895491	0	0.014895
7446041452	574460	4145240	0.016208767	0	0.016209
7447041452	574470	4145240	1.753866257	0	1.753866
7448041452	574480	4145240	2.031552579	0	2.031553
7449041452	574490	4145240	1.730754017	0	1.730754
7450041452	574500	4145240	1.075591179	0	1.075591
7451041452	574510	4145240	0.014675442	0	0.014675
7445041452	574450	4145250	0.015969989	0	0.01597
7446041452	574460	4145250	0.934190526	0	0.934191
7447041452	574470	4145250	0.972287214	0	0.972287
7448041452	574480	4145250	0.902571258	0	0.902571
7446041452	574460	4145260	0.706415687	0	0.706416
7447041452	574470	4145260	0.014392186	0	0.014392
7448041452	574480	4145260	0.015684393	0	0.015684
7447041452	574470	4145270	0.42587106	0	0.425871
7457041450	574570	4145030	0.56510399	0	0.565104
7463041450	574630	4145080	0.667441142	0	0.667441
7461041450	574610	4145090	0.658543175	0	0.658543
7462041450	574620	4145090	0.553731635	0	0.553732
7463041450	574630	4145090	0.01413234	0	0.014132
7464041450	574640	4145090	0.015361341	0	0.015361
7460041451	574600	4145100	0.016875938	0	0.016876
7461041451	574610	4145100	0.231080266	0	0.23108
7462041451	574620	4145100	0.302589392	0	0.302589
7463041451	574630	4145100	0.377612291	0	0.377612
7464041451	574640	4145100	0.435644544	0	0.435645
7465041451	574650	4145100	0.447883052	0	0.447883
7459041451	574590	4145110	0.413250977	0	0.413251
7460041451	574600	4145110	0.013802266	0	0.013802
7461041451	574610	4145110	0.014989129	0	0.014989
7462041451	574620	4145110	0.01641243	0	0.016412
7463041451	574630	4145110	0.142332353	0	0.142332
7464041451	574640	4145110	0.179843802	0	0.179844
7465041451	574650	4145110	0.224666051	0	0.224666
7466041451	574660	4145110	0.269663872	0	0.269664
7460041451	574600	4145120	0.303574934	0	0.303575
7461041451	574610	4145120	0.315609779	0	0.31561
7462041451	574620	4145120	0.301587464	0	0.301587
7463041451	574630	4145120	0.013502624	0	0.013503
7464041451	574640	4145120	0.014591167	0	0.014591
7465041451	574650	4145120	0.015913806	0	0.015914
7466041451	574660	4145120	0.093347888	0	0.093348
7460041451	574600	4145130	0.117017275	0	0.117017
7462041451	574620	4145130	0.142898864	0	0.142899
7463041451	574630	4145130	0.172961397	0	0.172961
7464041451	574640	4145130	0.20287645	0	0.202876
7465041451	574650	4145130	0.226606702	0	0.226607

Max GLC for Chronic Calcs

Max GLC: 0.073931

XY	X	Y	2025	2026	2027	2034	2035
57449041452	574490	4145220	0	0	0	0.0127488	0.0060709
57450041452	574500	4145220	0	0	0	0.0072189	0.0034376
57451041452	574510	4145220	0	0	0	0.0001701	8.099E-05
57452041452	574520	4145220	0	0	0	0.0001867	8.89E-05
57453041452	574530	4145220	0	0	0	0.0309645	0.014745
57444041452	574440	4145230	0	0	0	0.0119189	0.0056757
57445041452	574450	4145230	0	0	0	0.0001698	8.084E-05
57446041452	574460	4145230	0	0	0	0.0001866	8.888E-05
57447041452	574470	4145230	0	0	0	0.0508507	0.0242146
57448041452	574480	4145230	0	0	0	0.0153763	0.0073221
57449041452	574490	4145230	0	0	0	0.0001703	8.112E-05
57450041452	574500	4145230	0	0	0	0.0001852	8.821E-05
57451041452	574510	4145230	0	0	0	0.0739305	0.035205
57452041452	574520	4145230	0	0	0	0.0350728	0.0167013
57444041452	574440	4145240	0	0	0	0.015165	0.0072214
57445041452	574450	4145240	0	0	0	0.0001684	8.017E-05
57446041452	574460	4145240	0	0	0	0.0001832	8.724E-05
57447041452	574470	4145240	0	0	0	0.0198237	0.0094398
57448041452	574480	4145240	0	0	0	0.0229623	0.0109344
57449041452	574490	4145240	0	0	0	0.0195624	0.0093154
57450041452	574500	4145240	0	0	0	0.0121572	0.0057892
57451041452	574510	4145240	0	0	0	0.0001659	7.899E-05
57445041452	574450	4145250	0	0	0	0.0001805	8.596E-05
57446041452	574460	4145250	0	0	0	0.010559	0.0050281
57447041452	574470	4145250	0	0	0	0.0109896	0.0052331
57448041452	574480	4145250	0	0	0	0.0102016	0.0048579
57446041452	574460	4145260	0	0	0	0.0079845	0.0038021
57447041452	574470	4145260	0	0	0	0.0001627	7.746E-05
57448041452	574480	4145260	0	0	0	0.0001773	8.442E-05
57447041452	574470	4145270	0	0	0	0.0048135	0.0022922
57457041450	574570	4145030	0	0	0	0.0063873	0.0030416
57463041450	574630	4145080	0	0	0	0.007544	0.0035924
57461041450	574610	4145090	0	0	0	0.0074434	0.0035445
57462041450	574620	4145090	0	0	0	0.0062587	0.0029804
57463041450	574630	4145090	0	0	0	0.0001597	7.606E-05
57464041450	574640	4145090	0	0	0	0.0001736	8.268E-05
57460041451	574600	4145100	0	0	0	0.0001907	9.083E-05
57461041451	574610	4145100	0	0	0	0.0026119	0.0012437
57462041451	574620	4145100	0	0	0	0.0034201	0.0016286
57463041451	574630	4145100	0	0	0	0.0042681	0.0020324
57464041451	574640	4145100	0	0	0	0.004924	0.0023448
57465041451	574650	4145100	0	0	0	0.0050623	0.0024106
57459041451	574590	4145110	0	0	0	0.0046709	0.0022242
57460041451	574600	4145110	0	0	0	0.000156	7.429E-05
57461041451	574610	4145110	0	0	0	0.0001694	8.068E-05
57462041451	574620	4145110	0	0	0	0.0001855	8.834E-05
57463041451	574630	4145110	0	0	0	0.0016088	0.0007661
57464041451	574640	4145110	0	0	0	0.0020327	0.000968
57465041451	574650	4145110	0	0	0	0.0025394	0.0012092
57466041451	574660	4145110	0	0	0	0.003048	0.0014514
57460041451	574600	4145120	0	0	0	0.0034313	0.0016339
57461041451	574610	4145120	0	0	0	0.0035673	0.0016987
57462041451	574620	4145120	0	0	0	0.0034088	0.0016232
57463041451	574630	4145120	0	0	0	0.0001526	7.268E-05
57464041451	574640	4145120	0	0	0	0.0001649	7.853E-05
57465041451	574650	4145120	0	0	0	0.0001799	8.565E-05
57466041451	574660	4145120	0	0	0	0.0010551	0.0005024
57460041451	574600	4145130	0	0	0	0.0013226	0.0006298
57462041451	574620	4145130	0	0	0	0.0016152	0.0007691
57463041451	574630	4145130	0	0	0	0.001955	0.0009309
57464041451	574640	4145130	0	0	0	0.0022931	0.0010919
57465041451	574650	4145130	0	0	0	0.0025613	0.0012197

Garvey Reservoir Rehab - Unmitigated Proposed Pump Station - 3rd Trimester Start

Cancer Risk Summary & Maximum Annual GLC for Chronic Calculations

Cancer Risk Summary

323

Max Risk: 6.540886

XY	X	Y	Offroad Risk	Haul Risk	Total Risk
7463041451	574630	4145140	0.235406349	0	0.235406
7464041451	574640	4145140	0.229774013	0	0.229774
7459041451	574590	4145150	0.013118707	0	0.013119
7460041451	574600	4145150	0.014153409	0	0.014153
7460041451	574600	4145160	0.015401137	0	0.015401
7461041451	574610	4145160	0.055876235	0	0.055876
7461041451	574610	4145170	0.065982134	0	0.065982
7457041450	574570	4145030	0.07924598	0	0.079246
7463041450	574630	4145080	0.096217897	0	0.096218
7461041450	574610	4145090	0.115935754	0	0.115936
7462041450	574620	4145090	0.136557219	0	0.136557
7463041450	574630	4145090	0.156687084	0	0.156687
7464041450	574640	4145090	0.172984807	0	0.172985
7460041451	574600	4145100	0.182196461	0	0.182196
7461041451	574610	4145100	0.181672088	0	0.181672
7462041451	574620	4145100	0.012723086	0	0.012723
7463041451	574630	4145100	0.013710968	0	0.013711
7464041451	574640	4145100	0.014858036	0	0.014858
7465041451	574650	4145100	0.016227494	0	0.016227
7459041451	574590	4145110	0.043223377	0	0.043223
7460041451	574600	4145110	0.04997703	0	0.049977
7461041451	574610	4145110	0.058104823	0	0.058105
7462041451	574620	4145110	0.068423749	0	0.068424
7463041451	574630	4145110	0.080594369	0	0.080594
7464041451	574640	4145110	0.09573332	0	0.095733
7465041451	574650	4145110	0.110411102	0	0.110411
7466041451	574660	4145110	0.124592603	0	0.124593
7460041451	574600	4145120	0.136091369	0	0.136091
7461041451	574610	4145120	0.143514535	0	0.143515
7462041451	574620	4145120	0.145010405	0	0.14501
7463041451	574630	4145120	0.012334487	0	0.012334
7464041451	574640	4145120	0.013252141	0	0.013252
7465041451	574650	4145120	0.014343026	0	0.014343
7466041451	574660	4145120	0.015560322	0	0.01556
7460041451	574600	4145130	0.016941485	0	0.016941
7462041451	574620	4145130	0.024797727	0	0.024798
7463041451	574630	4145130	0.027649009	0	0.027649
7464041451	574640	4145130	0.030802275	0	0.030802
7465041451	574650	4145130	0.034894263	0	0.034894
7463041451	574630	4145140	0.039613626	0	0.039614
7464041451	574640	4145140	0.044925251	0	0.044925
7459041451	574590	4145150	0.051798292	0	0.051798
7460041451	574600	4145150	0.059736468	0	0.059736
7460041451	574600	4145160	0.068688277	0	0.068688
7461041451	574610	4145160	0.078850359	0	0.07885
7461041451	574610	4145170	0.090953092	0	0.090953
7457041450	574570	4145030	0.101293086	0	0.101293
7463041450	574630	4145080	0.109800113	0	0.1098
7461041450	574610	4145090	0.115675908	0	0.115676
7462041450	574620	4145090	0.117710197	0	0.11771
7463041450	574630	4145090	0.011934184	0	0.011934
7464041450	574640	4145090	0.012772246	0	0.012772
7460041451	574600	4145100	0.013792902	0	0.013793
7461041451	574610	4145100	0.014902514	0	0.014903
7462041451	574620	4145100	0.016157266	0	0.016157
7463041451	574630	4145100	0.017585248	0	0.017585
7464041451	574640	4145100	0.019219234	0	0.019219
7465041451	574650	4145100	0.021073269	0	0.021073
7459041451	574590	4145110	0.023236311	0	0.023236
7460041451	574600	4145110	0.025696654	0	0.025697
7461041451	574610	4145110	0.028540913	0	0.028541
7462041451	574620	4145110	0.032000843	0	0.032001

Max GLC for Chronic Calcs

Max GLC: 0.073931

XY	X	Y	2025	2026	2027	2034	2035
57463041451	574630	4145140	0	0	0	0.0026608	0.001267
57464041451	574640	4145140	0	0	0	0.0025971	0.0012367
57459041451	574590	4145150	0	0	0	0.0001483	7.061E-05
57460041451	574600	4145150	0	0	0	0.00016	7.618E-05
57460041451	574600	4145160	0	0	0	0.0001741	8.289E-05
57461041451	574610	4145160	0	0	0	0.0006316	0.0003007
57461041451	574610	4145170	0	0	0	0.0007458	0.0003551
57457041450	574570	4145030	0	0	0	0.0008957	0.0004265
57463041450	574630	4145080	0	0	0	0.0010875	0.0005179
57461041450	574610	4145090	0	0	0	0.0013104	0.000624
57462041450	574620	4145090	0	0	0	0.0015435	0.000735
57463041450	574630	4145090	0	0	0	0.001771	0.0008433
57464041450	574640	4145090	0	0	0	0.0019552	0.0009311
57460041451	574600	4145100	0	0	0	0.0020593	0.0009806
57461041451	574610	4145100	0	0	0	0.0020534	0.0009778
57462041451	574620	4145100	0	0	0	0.0001438	6.848E-05
57463041451	574630	4145100	0	0	0	0.000155	7.38E-05
57464041451	574640	4145100	0	0	0	0.0001679	7.997E-05
57465041451	574650	4145100	0	0	0	0.0001834	8.734E-05
57459041451	574590	4145110	0	0	0	0.0004885	0.0002326
57460041451	574600	4145110	0	0	0	0.0005649	0.000269
57461041451	574610	4145110	0	0	0	0.0006567	0.0003127
57462041451	574620	4145110	0	0	0	0.0007734	0.0003683
57463041451	574630	4145110	0	0	0	0.0009109	0.0004338
57464041451	574640	4145110	0	0	0	0.0010821	0.0005153
57465041451	574650	4145110	0	0	0	0.001248	0.0005943
57466041451	574660	4145110	0	0	0	0.0014082	0.0006706
57460041451	574600	4145120	0	0	0	0.0015382	0.0007325
57461041451	574610	4145120	0	0	0	0.0016221	0.0007724
57462041451	574620	4145120	0	0	0	0.001639	0.0007805
57463041451	574630	4145120	0	0	0	0.0001394	6.639E-05
57464041451	574640	4145120	0	0	0	0.0001498	7.133E-05
57465041451	574650	4145120	0	0	0	0.0001621	7.72E-05
57466041451	574660	4145120	0	0	0	0.0001759	8.375E-05
57460041451	574600	4145130	0	0	0	0.0001915	9.118E-05
57462041451	574620	4145130	0	0	0	0.0002803	0.0001335
57463041451	574630	4145130	0	0	0	0.0003125	0.0001488
57464041451	574640	4145130	0	0	0	0.0003482	0.0001658
57465041451	574650	4145130	0	0	0	0.0003944	0.0001878
57463041451	574630	4145140	0	0	0	0.0004477	0.0002132
57464041451	574640	4145140	0	0	0	0.0005078	0.0002418
57459041451	574590	4145150	0	0	0	0.0005855	0.0002788
57460041451	574600	4145150	0	0	0	0.0006752	0.0003215
57460041451	574600	4145160	0	0	0	0.0007764	0.0003697
57461041451	574610	4145160	0	0	0	0.0008912	0.0004244
57461041451	574610	4145170	0	0	0	0.001028	0.0004895
57457041450	574570	4145030	0	0	0	0.0011449	0.0005452
57463041450	574630	4145080	0	0	0	0.0012411	0.000591
57461041450	574610	4145090	0	0	0	0.0013075	0.0006226
57462041450	574620	4145090	0	0	0	0.0013305	0.0006336
57463041450	574630	4145090	0	0	0	0.0001349	6.423E-05
57464041450	574640	4145090	0	0	0	0.0001444	6.874E-05
57460041451	574600	4145100	0	0	0	0.0001559	7.424E-05
57461041451	574610	4145100	0	0	0	0.0001684	8.021E-05
57462041451	574620	4145100	0	0	0	0.0001826	8.696E-05
57463041451	574630	4145100	0	0	0	0.0001988	9.465E-05
57464041451	574640	4145100	0	0	0	0.0002172	0.0001034
57465041451	574650	4145100	0	0	0	0.0002382	0.0001134
57459041451	574590	4145110	0	0	0	0.0002626	0.0001251
57460041451	574600	4145110	0	0	0	0.0002904	0.0001383
57461041451	574610	4145110	0	0	0	0.0003226	0.0001536
57462041451	574620	4145110	0	0	0	0.0003617	0.0001722

Garvey Reservoir Rehab - Unmitigated Proposed Pump Station - 3rd Trimester Start

Cancer Risk Summary & Maximum Annual GLC for Chronic Calculations

Cancer Risk Summary

323

Max Risk: 6.540886

XY	X	Y	Offroad Risk	Haul Risk	Total Risk
7463041451	574630	4145110	0.035950033	0	0.03595
7464041451	574640	4145110	0.040315912	0	0.040316
7465041451	574650	4145110	0.045042299	0	0.045042
7466041451	574660	4145110	0.051980887	0	0.051981
7460041451	574600	4145120	0.059144207	0	0.059144
7461041451	574610	4145120	0.067220498	0	0.06722
7462041451	574620	4145120	0.075940553	0	0.075941
7463041451	574630	4145120	0.083707838	0	0.083708
7464041451	574640	4145120	0.090615994	0	0.090616
7465041451	574650	4145120	0.095091898	0	0.095092
7466041451	574660	4145120	0.09725494	0	0.097255
7460041451	574600	4145130	0.011473016	0	0.011473
7462041451	574620	4145130	0.012294691	0	0.012295
7463041451	574630	4145130	0.013193618	0	0.013194
7464041451	574640	4145130	0.014233001	0	0.014233
7465041451	574650	4145130	0.015356659	0	0.015357
7463041451	574630	4145140	0.016651207	0	0.016651
7464041451	574640	4145140	0.018076848	0	0.018077
7459041451	574590	4145150	0.019720198	0	0.01972
7460041451	574600	4145150	0.021607007	0	0.021607
7460041451	574600	4145160	0.023819208	0	0.023819
7461041451	574610	4145160	0.026312325	0	0.026312
7461041451	574610	4145170	0.029203403	0	0.029203
7457041450	574570	4145030	0.032565013	0	0.032565
7463041450	574630	4145080	0.036486111	0	0.036486
7461041450	574610	4145090	0.040198865	0	0.040199
7462041450	574620	4145090	0.045648606	0	0.045649
7463041450	574630	4145090	0.051585266	0	0.051585
7464041450	574640	4145090	0.057748998	0	0.057749
7460041451	574600	4145100	0.064284942	0	0.064285
7461041451	574610	4145100	0.070549335	0	0.070549
7462041451	574620	4145100	0.075842232	0	0.075842
7463041451	574630	4145100	0.079770354	0	0.07977
7464041451	574640	4145100	0.081839757	0	0.08184
7465041451	574650	4145100	0	0	0
7459041451	574590	4145110	0	0	0
7460041451	574600	4145110	0	0	0
7461041451	574610	4145110	0	0	0
7462041451	574620	4145110	0	0	0
7463041451	574630	4145110	0	0	0
7464041451	574640	4145110	0	0	0
7465041451	574650	4145110	0	0	0
7466041451	574660	4145110	0	0	0
7460041451	574600	4145120	0	0	0
7461041451	574610	4145120	0	0	0
7462041451	574620	4145120	0	0	0
7463041451	574630	4145120	0	0	0
7464041451	574640	4145120	0	0	0
7465041451	574650	4145120	0	0	0
7466041451	574660	4145120	0	0	0
7460041451	574600	4145130	0	0	0
7462041451	574620	4145130	0	0	0
7463041451	574630	4145130	0	0	0
7464041451	574640	4145130	0	0	0
7465041451	574650	4145130	0	0	0
7463041451	574630	4145140	0	0	0
7464041451	574640	4145140	0	0	0
7459041451	574590	4145150	0	0	0
7460041451	574600	4145150	0	0	0
7460041451	574600	4145160	0	0	0
7461041451	574610	4145160	0	0	0
7461041451	574610	4145170	0	0	0

Max GLC for Chronic Calcs

Max GLC: 0.073931

XY	X	Y	2025	2026	2027	2034	2035
57463041451	574630	4145110	0	0	0	0.0004063	0.0001935
57464041451	574640	4145110	0	0	0	0.0004557	0.000217
57465041451	574650	4145110	0	0	0	0.0005091	0.0002424
57466041451	574660	4145110	0	0	0	0.0005875	0.0002798
57460041451	574600	4145120	0	0	0	0.0006685	0.0003183
57461041451	574610	4145120	0	0	0	0.0007598	0.0003618
57462041451	574620	4145120	0	0	0	0.0008583	0.0004087
57463041451	574630	4145120	0	0	0	0.0009461	0.0004505
57464041451	574640	4145120	0	0	0	0.0010242	0.0004877
57465041451	574650	4145120	0	0	0	0.0010748	0.0005118
57466041451	574660	4145120	0	0	0	0.0010993	0.0005235
57460041451	574600	4145130	0	0	0	0.0001297	6.175E-05
57462041451	574620	4145130	0	0	0	0.000139	6.617E-05
57463041451	574630	4145130	0	0	0	0.0001491	7.101E-05
57464041451	574640	4145130	0	0	0	0.0001609	7.661E-05
57465041451	574650	4145130	0	0	0	0.0001736	8.265E-05
57463041451	574630	4145140	0	0	0	0.0001882	8.962E-05
57464041451	574640	4145140	0	0	0	0.0002043	9.73E-05
57459041451	574590	4145150	0	0	0	0.0002229	0.0001061
57460041451	574600	4145150	0	0	0	0.0002442	0.0001163
57460041451	574600	4145160	0	0	0	0.0002692	0.0001282
57461041451	574610	4145160	0	0	0	0.0002974	0.0001416
57461041451	574610	4145170	0	0	0	0.0003301	0.0001572
57457041450	574570	4145030	0	0	0	0.0003681	0.0001753
57463041450	574630	4145080	0	0	0	0.0004124	0.0001964
57461041450	574610	4145090	0	0	0	0.0004544	0.0002164
57462041450	574620	4145090	0	0	0	0.000516	0.0002457
57463041450	574630	4145090	0	0	0	0.0005831	0.0002776
57464041450	574640	4145090	0	0	0	0.0006527	0.0003108
57460041451	574600	4145100	0	0	0	0.0007266	0.000346
57461041451	574610	4145100	0	0	0	0.0007974	0.0003797
57462041451	574620	4145100	0	0	0	0.0008572	0.0004082
57463041451	574630	4145100	0	0	0	0.0009016	0.0004293
57464041451	574640	4145100	0	0	0	0.000925	0.0004405
57465041451	574650	4145100	0	0	0	0	0
57459041451	574590	4145110	0	0	0	0	0
57460041451	574600	4145110	0	0	0	0	0
57461041451	574610	4145110	0	0	0	0	0
57462041451	574620	4145110	0	0	0	0	0
57463041451	574630	4145110	0	0	0	0	0
57464041451	574640	4145110	0	0	0	0	0
57465041451	574650	4145110	0	0	0	0	0
57466041451	574660	4145110	0	0	0	0	0
57460041451	574600	4145120	0	0	0	0	0
57461041451	574610	4145120	0	0	0	0	0
57462041451	574620	4145120	0	0	0	0	0
57463041451	574630	4145120	0	0	0	0	0
57464041451	574640	4145120	0	0	0	0	0
57465041451	574650	4145120	0	0	0	0	0
57466041451	574660	4145120	0	0	0	0	0
57460041451	574600	4145130	0	0	0	0	0
57462041451	574620	4145130	0	0	0	0	0
57463041451	574630	4145130	0	0	0	0	0
57464041451	574640	4145130	0	0	0	0	0
57465041451	574650	4145130	0	0	0	0	0
57463041451	574630	4145140	0	0	0	0	0
57464041451	574640	4145140	0	0	0	0	0
57459041451	574590	4145150	0	0	0	0	0
57460041451	574600	4145150	0	0	0	0	0
57460041451	574600	4145160	0	0	0	0	0
57461041451	574610	4145160	0	0	0	0	0
57461041451	574610	4145170	0	0	0	0	0

Garvey Reservoir Rehab - Unmitigated Proposed Pump Station - 3rd Trimester Start

Construction Modeling Assumptions

AERMOD Sources

Volume Sources		
Offroad Construction Exhaust		
Release Height	3.66	m
Emissions rate	1	g/s
Init Vert Dimension	3.4	m
Line Volume		
Onroad Hauling Exhaust		
Plume Height	7.315	m
Plume Width	20	m
Release Height	3.66	m
Emissions rate	1	g/s

Meteorology:

SCAQMD	Pico	Rivera	2010 - 2012, 2015 - 2016

SCAQMD Met Data

https://www.aqmd.gov/home/air-quality/meteorological-data/data-for-aermod

AERMOD Sources

Garvey Reservoir Rehab - Unmitigated Proposed Pump Station - 3rd Trimester Start

Health Risk Assessment Risk Factors

Residential Risk	Abbreviation	UOM	3rd Trimester	0<2	2<16	16<30
Daily Breathing Rate (95th %'ile)	DBR	L/kg-day	361	1090	572	261
Fraction Of Time At Home [a]	FAH	unitless	1	1	1	0.73
Exposure Frequency	EF	days/year	0.96	0.96	0.96	0.96
Age Sensitivity Factor	ASF	unitless	10	10	3	1
Inhalation Absorption Factor	A	unitless	1	1	1	1
Conversion Factor	CF_1	m^3/L	0.001	0.001	0.001	0.001
Conversion Factor	CF_2	$\mu g/m^3$	0.001	0.001	0.001	0.001
Cancer Potency Factor (diesel exhaust)	CPF	$mg/kg\text{-}day^{-1}$	1.1	1.1	1.1	1.1
Averaging Time (for residential exposure)	AT	years	70.00	70.00	70.00	70.00

[a] assume school or daycare will have cancer risk of >1 per million

Garvey Reservoir Rehab - Unmitigated Proposed Pump Station - 3rd Trimester Start

Health Risk Assessment Exposure Duration Assumptions for Offroad Equipment

Residential Receptors

			Start Date	*1/1/2034*	*4/2/2034*	*4/2/2036*
			End Date	*4/1/2034*	*4/1/2036*	*3/30/2050*
	1/1/2034	*5/31/2035*	*Days*	*90*	*730*	*5110*
Phase	Start Date	End Date	Duration (days)	3rd Tri	0<2	02<16
Demolition - 2025			1	0	0	0
Demolition - 2026			1	0	0	0
Site Preparation - 2034	1/1/2034	3/31/2034	90	90	0	0
Site Preparation - 2026			1	0	0	0
Grading - 2034	4/1/2034	5/31/2034	61	0	60	0
Grading - 2026			1	0	0	0
Infrastructure - 2034	6/1/2034	12/31/2034	214	0	214	0
Infrastructure - 2035	1/1/2035	5/31/2035	151	0	151	0
Paving - 2025			1	0	0	0
Architectural Coating - 2026			1	0	0	0

Intake Factor for Inhalation, IF (m^3/kg-day)

Phase	Year	Year	Equation	3rd Trimester	0<2	2<16
Demolition - 2025		1900		0	0	0
Demolition - 2026		1900	$\frac{DBR \cdot FAH \cdot EF \cdot ED \cdot ASF \cdot A \cdot CF_1}{AT}$	0	0	0
Site Preparation - 2034		2034		0.012193657	0	0
Site Preparation - 2026		1900		0	0	0
Grading - 2034		2034		0	0.024544943	0
Grading - 2026		1900		0	0	0
Infrastructure - 2034		2034		0	0.087543629	0
Infrastructure - 2035		2035		0	0.061771439	0
Paving - 2025		1900		0	0	0
Architectural Coating - 2026		1900		0	0	0

Risk Calculation Part 1, R1

Equation	3rd Trimester	0<2	2<16
	0	0	0
	0	0	0
	1.3413E-05	0	0
	0	0	0
$IF \cdot CPF \cdot CF_2$	0	2.69994E-05	0
	0	0	0
	0	9.6298E-05	0
	0	6.79486E-05	0
	0	0	0
	0	0	0

Exposure Durations

Garvey Reservoir Rehab - Unmitigated Proposed Pump Station - 3rd Trimester Start

Offroad DPM Emissions, Ground Level Concentrations and Health Risk Calculations

Residential Receptors

Phase	Year	Emissions (lbs/day)	Work Hours Per Day	Emissions (g/s)
Demolition - 2025	1900		10	0
Demolition - 2026	1900		10	0
Site Preparation - 2034	2034	0.060	10	0.000755983
Site Preparation - 2026	1900		10	0
Grading - 2034	2034	0.050	10	0.000629986
Grading - 2026	1900		10	0
Infrastructure - 2034	2034	0.100	10	0.001259972
Infrastructure - 2035	2035	0.100	10	0.001259972
Paving - 2025	1900		10	0
Architectural Coating - 2026	1900		10	0

		AERMOD Column Identifier:	*4*	*4*	*4*	*4*	*4*	*4*	*4*	*4*	*4*	*4*					
													MMULT($D30:$M30, 'Exposure Durations'!M$30:M$39)				
Garvey Reservoir Rehab - Unmitigated Proposed Pump Station - 3rd Trimester S			Demolition - 2025	Demolition - 2026	Site Preparation - 2034	Site Preparation - 202	Grading - 2034	Grading - 2026	Infrastructure - 2034	Infrastructure - 2035	Paving - 2025	Architectural Coating - 2	Child Risk				
Unique Identifier	X (UTM)	Y (UTM)	1900	1900	2034	1900	2034	1900	2034	2035	1900	1900	3rd Trimester	0<2	2<16	Total	per million
396166.283767377.28	396166.28	3767377	0	0	2.82813E-05	0	2.35678E-05	0	4.71356E-05	4.71356E-05	0	0	3.79338E-10	8.37817E-09	0	8.75751E-09	0.0087575
396266.283767377.28	396266.28	3767377	0	0	3.12675E-05	0	2.60562E-05	0	5.21125E-05	5.21125E-05	0	0	4.19391E-10	9.2628E-09	0	9.68219E-09	0.0096822
396366.283767377.28	396366.28	3767377	0	0	3.58563E-05	0	2.98802E-05	0	5.97605E-05	5.97605E-05	0	0	4.80941E-10	1.06222E-08	0	1.11031E-08	0.0111031
396466.283767377.28	396466.28	3767377	0	0	4.07324E-05	0	3.39437E-05	0	6.78873E-05	6.78873E-05	0	0	5.46344E-10	1.20667E-08	0	1.26131E-08	0.0126131
396566.283767377.28	396566.28	3767377	0	0	4.70146E-05	0	3.91788E-05	0	7.83577E-05	7.83577E-05	0	0	6.30608E-10	1.39278E-08	0	1.45584E-08	0.0145584
396666.283767377.28	396666.28	3767377	0	0	5.27374E-05	0	4.39478E-05	0	8.78957E-05	8.78957E-05	0	0	7.07368E-10	1.56231E-08	0	1.63305E-08	0.0163305
396766.283767377.28	396766.28	3767377	0	0	5.82334E-05	0	4.85278E-05	0	9.70557E-05	9.70557E-05	0	0	7.81086E-10	1.72513E-08	0	1.80324E-08	0.0180324
396866.283767377.28	396866.28	3767377	0	0	6.46441E-05	0	5.38701E-05	0	0.00010774	0.00010774	0	0	8.67073E-10	1.91504E-08	0	2.00175E-08	0.0200175
396966.283767377.28	396966.28	3767377	0	0	7.2771E-05	0	6.06425E-05	0	0.000121285	0.000121285	0	0	9.76079E-10	2.15579E-08	0	2.2534E-08	0.022534
397066.283767377.28	397066.28	3767377	0	0	7.89549E-05	0	6.57957E-05	0	0.000131591	0.000131591	0	0	1.05902E-09	2.33899E-08	0	2.44489E-08	0.0244489
397166.283767377.28	397166.28	3767377	0	0	8.1495E-05	0	6.79125E-05	0	0.000135825	0.000135825	0	0	1.09309E-09	2.41424E-08	0	2.52355E-08	0.0252355
397266.283767377.28	397266.28	3767377	0	0	8.08449E-05	0	6.73707E-05	0	0.000134741	0.000134741	0	0	1.08437E-09	2.39498E-08	0	2.50342E-08	0.0250342
397366.283767377.28	397366.28	3767377	0	0	8.16991E-05	0	6.80826E-05	0	0.000136165	0.000136165	0	0	1.09583E-09	2.42029E-08	0	2.52987E-08	0.0252987
397466.283767377.28	397466.28	3767377	0	0	8.10414E-05	0	6.75345E-05	0	0.000135069	0.000135069	0	0	1.08701E-09	2.4008E-08	0	2.5095E-08	0.025095
397566.283767377.28	397566.28	3767377	0	0	7.7133E-05	0	6.42775E-05	0	0.000128555	0.000128555	0	0	1.03459E-09	2.28502E-08	0	2.38848E-08	0.0238848
397666.283767377.28	397666.28	3767377	0	0	7.18562E-05	0	5.98802E-05	0	0.00011976	0.00011976	0	0	9.63809E-10	2.1287E-08	0	2.22508E-08	0.0222508
397766.283767377.28	397766.28	3767377	0	0	6.38352E-05	0	5.3196E-05	0	0.000106392	0.000106392	0	0	8.56223E-10	1.89108E-08	0	1.9767E-08	0.019767
397866.283767377.28	397866.28	3767377	0	0	5.71297E-05	0	4.76081E-05	0	9.52161E-05	9.52161E-05	0	0	7.66281E-10	1.69243E-08	0	1.76906E-08	0.0176906
396166.283767477.28	396166.28	3767477	0	0	2.97328E-05	0	2.47774E-05	0	4.95547E-05	4.95547E-05	0	0	3.98807E-10	8.80817E-09	0	9.20697E-09	0.009207
396266.283767477.28	396266.28	3767477	0	0	3.26736E-05	0	2.7228E-05	0	5.4456E-05	5.4456E-05	0	0	4.38252E-10	9.67935E-09	0	1.01176E-08	0.0101176
396366.283767477.28	396366.28	3767477	0	0	3.80411E-05	0	3.17009E-05	0	6.34018E-05	6.34018E-05	0	0	5.10246E-10	1.12694E-08	0	1.17797E-08	0.0117797
396466.283767477.28	396466.28	3767477	0	0	4.4036E-05	0	3.66967E-05	0	7.33934E-05	7.33934E-05	0	0	5.90656E-10	1.30454E-08	0	1.36361E-08	0.0136361
396566.283767477.28	396566.28	3767477	0	0	5.10062E-05	0	4.25052E-05	0	8.50103E-05	8.50103E-05	0	0	6.84147E-10	1.51103E-08	0	1.57944E-08	0.0157944
396666.283767477.28	396666.28	3767477	0	0	5.85963E-05	0	4.88302E-05	0	9.76604E-05	9.76604E-05	0	0	7.85953E-10	1.73588E-08	0	1.81447E-08	0.0181447
396766.283767477.28	396766.28	3767477	0	0	6.72523E-05	0	5.60436E-05	0	0.000112087	0.000112087	0	0	9.02056E-10	1.99231E-08	0	2.08251E-08	0.0208251
396866.283767477.28	396866.28	3767477	0	0	7.73295E-05	0	6.44413E-05	0	0.000128883	0.000128883	0	0	1.03722E-09	2.29084E-08	0	2.39456E-08	0.0239456
396966.283767477.28	396966.28	3767477	0	0	9.02191E-05	0	7.51825E-05	0	0.000150365	0.000150365	0	0	1.21011E-09	2.67268E-08	0	2.79369E-08	0.0279369
397066.283767477.28	397066.28	3767477	0	0	0.000101778	0	8.4815E-05	0	0.00016963	0.00016963	0	0	1.36515E-09	3.01511E-08	0	3.15163E-08	0.0315163
397166.283767477.28	397166.28	3767477	0	0	0.000108612	0	9.05101E-05	0	0.00018102	0.00018102	0	0	1.45682E-09	3.21757E-08	0	3.36325E-08	0.0336325
397266.283767477.28	397266.28	3767477	0	0	0.000109859	0	9.15496E-05	0	0.000183099	0.000183099	0	0	1.47355E-09	3.25452E-08	0	3.40187E-08	0.0340187
397366.283767477.28	397366.28	3767477	0	0	0.000109602	0	9.13354E-05	0	0.000182671	0.000182671	0	0	1.4701E-09	3.24691E-08	0	3.39392E-08	0.0339392
397466.283767477.28	397466.28	3767477	0	0	0.00010865	0	9.05416E-05	0	0.000181083	0.000181083	0	0	1.45732E-09	3.21869E-08	0	3.36442E-08	0.0336442
397566.283767477.28	397566.28	3767477	0	0	0.000102375	0	8.53127E-05	0	0.000170625	0.000170625	0	0	1.37316E-09	3.0328E-08	0	3.17012E-08	0.0317012
397666.283767477.28	397666.28	3767477	0	0	9.28348E-05	0	7.73623E-05	0	0.000154725	0.000154725	0	0	1.24519E-09	2.75017E-08	0	2.87469E-08	0.0287469
397766.283767477.28	397766.28	3767477	0	0	8.19486E-05	0	6.82905E-05	0	0.000136581	0.000136581	0	0	1.09918E-09	2.42768E-08	0	2.53759E-08	0.0253759
397866.283767477.28	397866.28	3767477	0	0	7.12212E-05	0	5.9351E-05	0	0.000118702	0.000118702	0	0	9.55291E-10	2.10988E-08	0	2.20541E-08	0.0220541
396166.283767577.28	396166.28	3767577	0	0	3.05266E-05	0	2.54388E-05	0	5.08777E-05	5.08777E-05	0	0	4.09454E-10	9.04332E-09	0	9.45277E-09	0.0094528
396266.283767577.28	396266.28	3767577	0	0	3.41704E-05	0	2.84754E-05	0	5.69507E-05	5.69507E-05	0	0	4.58329E-10	1.01228E-08	0	1.05811E-08	0.0105811
396366.283767577.28	396366.28	3767577	0	0	3.94926E-05	0	3.29105E-05	0	6.58209E-05	6.58209E-05	0	0	5.29715E-10	1.16994E-08	0	1.22291E-08	0.0122291
396466.283767577.28	396466.28	3767577	0	0	4.64476E-05	0	3.87063E-05	0	7.74127E-05	7.74127E-05	0	0	6.23003E-10	1.37598E-08	0	1.43828E-08	0.0143828
396566.283767577.28	396566.28	3767577	0	0	5.52321E-05	0	4.60268E-05	0	9.20536E-05	9.20536E-05	0	0	7.4083E-10	1.63622E-08	0	1.7103E-08	0.017103
396666.283767577.28	396666.28	3767577	0	0	6.59595E-05	0	5.49663E-05	0	0.000109933	0.000109933	0	0	8.84717E-10	1.95401E-08	0	2.04248E-08	0.0204248
396766.283767577.28	396766.28	3767577	0	0	7.60292E-05	0	6.33577E-05	0	0.000126715	0.000126715	0	0	1.01978E-09	2.25232E-08	0	2.3543E-08	0.023543
396866.283767577.28	396866.28	3767577	0	0	9.28121E-05	0	7.73434E-05	0	0.000154687	0.000154687	0	0	1.24489E-09	2.7495E-08	0	2.87399E-08	0.0287399
396966.283767577.28	396966.28	3767577	0	0	0.000112059	0	9.33828E-05	0	0.000186766	0.000186766	0	0	1.50306E-09	3.31969E-08	0	3.47E-08	0.0347
397066.283767577.28	397066.28	3767577	0	0	0.000132554	0	0.000110462	0	0.000220924	0.000220924	0	0	1.77795E-09	3.92683E-08	0	4.10463E-08	0.0410463
397166.283767577.28	397166.28	3767577	0	0	0.000150169	0	0.00012514	0	0.000250281	0.000250281	0	0	2.01421E-09	4.44865E-08	0	4.65007E-08	0.0465007
397266.283767577.28	397266.28	3767577	0	0	0.000157713	0	0.000131428	0	0.000262855	0.000262855	0	0	2.11541E-09	4.67216E-08	0	4.8837E-08	0.048837
397366.283767577.28	397366.28	3767577	0	0	0.000157517	0	0.000131264	0	0.000262528	0.000262528	0	0	2.11277E-09	4.66633E-08	0	4.87761E-08	0.0487761

Garvey Reservoir Rehab - Unmitigated Proposed Pump Station - 3rd Trimester S			Demolition - 2025	Demolition - 2026	Site Preparation - 203	Site Preparation - 202	Grading - 2034	Grading - 2026	Infrastructure - 203	Infrastructure - 203	Paving - 2025	Architectural Coating - 2	Child Risk				
Unique Identifier	X (UTM)	Y (UTM)	1900	1900	2034	1900	2034	1900	2034	2035	1900	1900	3rd Trimester	0<2	2<16	Total	per million
397466.283767577.28	397466.28	3767577	0	0	0.000155672	0	0.000129727	0	0.000259453	0.000259453	0	0	2.08803E-09	4.61169E-08	0	4.82049E-08	0.0482049
397566.283767577.28	397566.28	3767577	0	0	0.000142956	0	0.00011913	0	0.000238261	0.000238261	0	0	1.91748E-09	4.235E-08	0	4.42674E-08	0.0442674
397666.283767577.28	397666.28	3767577	0	0	0.00012544	0	0.000104534	0	0.000209067	0.000209067	0	0	1.68253E-09	3.71609E-08	0	3.88435E-08	0.0388435
397766.283767577.28	397766.28	3767577	0	0	0.000106238	0	8.85319E-05	0	0.000177064	0.000177064	0	0	1.42498E-09	3.14725E-08	0	3.28974E-08	0.0328974
397866.283767577.28	397866.28	3767577	0	0	8.86617E-05	0	7.38848E-05	0	0.00014777	0.00014777	0	0	1.18922E-09	2.62655E-08	0	2.74547E-08	0.0274547
396166.283767677.28	396166.28	3767677	0	0	3.15472E-05	0	2.62893E-05	0	5.25786E-05	5.25786E-05	0	0	4.23143E-10	9.34566E-09	0	9.7688E-09	0.0097688
396266.283767677.28	396266.28	3767677	0	0	3.55615E-05	0	2.96345E-05	0	5.92691E-05	5.92691E-05	0	0	4.76987E-10	1.05349E-08	0	1.10118E-08	0.0110118
396366.283767677.28	396366.28	3767677	0	0	4.14657E-05	0	3.45547E-05	0	6.91095E-05	6.91095E-05	0	0	5.5618E-10	1.2284E-08	0	1.28401E-08	0.0128401
396466.283767677.28	396466.28	3767677	0	0	4.9343E-05	0	4.11192E-05	0	8.22384E-05	8.22384E-05	0	0	6.61839E-10	1.46176E-08	0	1.52794E-08	0.0152794
396566.283767677.28	396566.28	3767677	0	0	5.89213E-05	0	4.91011E-05	0	9.82022E-05	9.82022E-05	0	0	7.90313E-10	1.74551E-08	0	1.82454E-08	0.0182454
396666.283767677.28	396666.28	3767677	0	0	6.94824E-05	0	5.7902E-05	0	0.000115804	0.000115804	0	0	9.31969E-10	2.05837E-08	0	2.15157E-08	0.0215157
396766.283767677.28	396766.28	3767677	0	0	8.65525E-05	0	7.21271E-05	0	0.000144254	0.000144254	0	0	1.16093E-09	2.56407E-08	0	2.68016E-08	0.0268016
396866.283767677.28	396866.28	3767677	0	0	0.000111697	0	9.30804E-05	0	0.000186161	0.000186161	0	0	1.49819E-09	3.30894E-08	0	3.45876E-08	0.0345876
396966.283767677.28	396966.28	3767677	0	0	0.00014434	0	0.000120283	0	0.000240566	0.000240566	0	0	1.93603E-09	4.27598E-08	0	4.46958E-08	0.0446958
397066.283767677.28	397066.28	3767677	0	0	0.000179796	0	0.00014983	0	0.000299659	0.000299659	0	0	2.4116E-09	5.32633E-08	0	5.56749E-08	0.0556749
397166.283767677.28	397166.28	3767677	0	0	0.000217247	0	0.000181039	0	0.000362078	0.000362078	0	0	2.91394E-09	6.43581E-08	0	6.7272E-08	0.067272
397266.283767677.28	397266.28	3767677	0	0	0.000249233	0	0.000207694	0	0.000415388	0.000415388	0	0	3.34296E-09	7.38336E-08	0	7.71766E-08	0.0771766
397366.283767677.28	397366.28	3767677	0	0	0.000250813	0	0.00020901	0	0.000418021	0.000418021	0	0	3.36416E-09	7.43017E-08	0	7.76658E-08	0.0776658
397466.283767677.28	397466.28	3767677	0	0	0.00024546	0	0.00020455	0	0.0004091	0.0004091	0	0	3.29236E-09	7.27161E-08	0	7.60084E-08	0.0760084
397566.283767677.28	397566.28	3767677	0	0	0.000214798	0	0.000178998	0	0.000357996	0.000357996	0	0	2.88108E-09	6.36324E-08	0	6.65135E-08	0.0665135
397666.283767677.28	397666.28	3767677	0	0	0.000176734	0	0.000147278	0	0.000294556	0.000294556	0	0	2.37053E-09	5.23563E-08	0	5.47268E-08	0.0547268
397766.283767677.28	397766.28	3767677	0	0	0.000140658	0	0.000117215	0	0.00023443	0.00023443	0	0	1.88665E-09	4.16691E-08	0	4.35558E-08	0.0435558
397866.283767677.28	397866.28	3767677	0	0	0.00011057	0	9.21418E-05	0	0.000184284	0.000184284	0	0	1.48308E-09	3.27557E-08	0	3.42388E-08	0.0342388
396166.283767777.28	396166.28	3767777	0	0	3.21595E-05	0	2.67996E-05	0	5.35992E-05	5.35992E-05	0	0	4.31357E-10	9.52706E-09	0	9.95842E-09	0.0099584
396266.283767777.28	396266.28	3767777	0	0	3.71037E-05	0	3.09197E-05	0	6.18394E-05	6.18394E-05	0	0	4.97672E-10	1.09917E-08	0	1.14894E-08	0.0114894
396366.283767777.28	396366.28	3767777	0	0	4.30457E-05	0	3.58714E-05	0	7.17428E-05	7.17428E-05	0	0	5.77373E-10	1.2752E-08	0	1.33294E-08	0.0133294
396466.283767777.28	396466.28	3767777	0	0	5.10969E-05	0	4.25808E-05	0	8.51615E-05	8.51615E-05	0	0	6.85364E-10	1.51371E-08	0	1.58225E-08	0.0158225
396566.283767777.28	396566.28	3767777	0	0	6.07811E-05	0	5.06509E-05	0	0.000101302	0.000101302	0	0	8.15258E-10	1.8006E-08	0	1.88213E-08	0.0188213
396666.283767777.28	396666.28	3767777	0	0	7.47516E-05	0	6.2293E-05	0	0.000124586	0.000124586	0	0	1.00265E-09	2.21447E-08	0	2.31474E-08	0.0231474
396766.283767777.28	396766.28	3767777	0	0	9.72799E-05	0	8.10666E-05	0	0.000162133	0.000162133	0	0	1.30482E-09	2.88186E-08	0	3.01234E-08	0.0301234
396866.283767777.28	396866.28	3767777	0	0	0.000130551	0	0.000108792	0	0.000217585	0.000217585	0	0	1.75108E-09	3.86749E-08	0	4.04259E-08	0.0404259
396966.283767777.28	396966.28	3767777	0	0	0.000178843	0	0.000149036	0	0.000298072	0.000298072	0	0	2.39882E-09	5.29811E-08	0	5.538E-08	0.05538
397066.283767777.28	397066.28	3767777	0	0	0.000246057	0	0.000205048	0	0.000410096	0.000410096	0	0	3.30037E-09	7.2893E-08	0	7.61934E-08	0.0761934
397166.283767777.28	397166.28	3767777	0	0	0.000331695	0	0.000276413	0	0.000552825	0.000552825	0	0	4.44904E-09	9.82627E-08	0	1.02712E-07	0.1027117
397266.283767777.28	397266.28	3767777	0	0	0.000427622	0	0.000356352	0	0.000712703	0.000712703	0	0	5.7357E-09	1.2668E-07	0	1.32416E-07	0.1324161
397366.283767777.28	397366.28	3767777	0	0	0.000464038	0	0.000386698	0	0.000773396	0.000773396	0	0	6.22415E-09	1.37468E-07	0	1.43692E-07	0.1436924
397466.283767777.28	397466.28	3767777	0	0	0.000441593	0	0.000367994	0	0.000735988	0.000735988	0	0	5.92309E-09	1.30819E-07	0	1.36742E-07	0.1367422
397566.283767777.28	397566.28	3767777	0	0	0.000355078	0	0.000295898	0	0.000591796	0.000591796	0	0	4.76267E-09	1.0519E-07	0	1.09952E-07	0.1099523
397666.283767777.28	397666.28	3767777	0	0	0.000260875	0	0.000217396	0	0.000434791	0.000434791	0	0	3.49912E-09	7.72825E-08	0	8.07816E-08	0.0807816
397766.283767777.28	397766.28	3767777	0	0	0.000189351	0	0.000157793	0	0.000315585	0.000315585	0	0	2.53977E-09	5.60941E-08	0	5.86339E-08	0.0586339
397866.283767777.28	397866.28	3767777	0	0	0.000139245	0	0.000116037	0	0.000232074	0.000232074	0	0	1.86769E-09	4.12503E-08	0	4.3118E-08	0.043118
396166.283767877.28	396166.28	3767877	0	0	3.24922E-05	0	2.70768E-05	0	5.41536E-05	5.41536E-05	0	0	4.35818E-10	9.6256E-09	0	1.00614E-08	0.0100614
396266.283767877.28	396266.28	3767877	0	0	3.76329E-05	0	3.13607E-05	0	6.27214E-05	6.27214E-05	0	0	5.0477E-10	1.11485E-08	0	1.16533E-08	0.0116533
396366.283767877.28	396366.28	3767877	0	0	4.40814E-05	0	3.67345E-05	0	7.3469E-05	7.3469E-05	0	0	5.91265E-10	1.30588E-08	0	1.36501E-08	0.0136501
396466.283767877.28	396466.28	3767877	0	0	5.21326E-05	0	4.34438E-05	0	8.68877E-05	8.68877E-05	0	0	6.99256E-10	1.5444E-08	0	1.61432E-08	0.0161432
396566.283767877.28	396566.28	3767877	0	0	6.27693E-05	0	5.23077E-05	0	0.000104615	0.000104615	0	0	8.41926E-10	1.8595E-08	0	1.94369E-08	0.0194369
397466.283767877.28	397466.28	3767877	0	0	0.000975717	0	0.000813098	0	0.001626196	0.001626196	0	0	1.30873E-08	2.8905E-07	0	3.02138E-07	0.3021376
397566.283767877.28	397566.28	3767877	0	0	0.000658348	0	0.000548623	0	0.001097247	0.001097247	0	0	8.83044E-09	1.95032E-07	0	2.03862E-07	0.203862
397666.283767877.28	397666.28	3767877	0	0	0.000398222	0	0.000331851	0	0.000663703	0.000663703	0	0	5.34136E-09	1.17971E-07	0	1.23312E-07	0.1233121
397766.283767877.28	397766.28	3767877	0	0	0.000253043	0	0.000210869	0	0.000421738	0.000421738	0	0	3.39407E-09	7.49623E-08	0	7.83564E-08	0.0783564
397866.283767877.28	397866.28	3767877	0	0	0.000170497	0	0.000142081	0	0.000284162	0.000284162	0	0	2.28688E-09	5.05087E-08	0	5.27955E-08	0.0527955
396166.283767977.28	396166.28	3767977	0	0	3.23636E-05	0	2.69697E-05	0	5.39394E-05	5.39394E-05	0	0	4.34094E-10	9.58753E-09	0	1.00216E-08	0.0100216
396266.283767977.28	396266.28	3767977	0	0	3.76555E-05	0	3.13796E-05	0	6.27592E-05	6.27592E-05	0	0	5.05074E-10	1.11552E-08	0	1.16603E-08	0.0116603
396366.283767977.28	396366.28	3767977	0	0	4.42099E-05	0	3.68416E-05	0	7.36832E-05	7.36832E-05	0	0	5.92988E-10	1.30969E-08	0	1.36899E-08	0.0136899
396466.283767977.28	396466.28	3767977	0	0	5.22838E-05	0	4.35698E-05	0	8.71397E-05	8.71397E-05	0	0	7.01284E-10	1.54888E-08	0	1.619E-08	0.01619
397466.283767977.28	397466.28	3767977	0	0	0.003493989	0	0.002911657	0	0.005823314	0.005823314	0	0	4.6865E-08	1.03507E-06	0	1.08194E-06	1.0819375
397566.283767977.28	397566.28	3767977	0	0	0.001239382	0	0.001032818	0	0.002065636	0.002065636	0	0	1.66239E-08	3.67159E-07	0	3.83783E-07	0.383783
397666.283767977.28	397666.28	3767977	0	0	0.000562951	0	0.000469125	0	0.000938251	0.000938251	0	0	7.55087E-09	1.66771E-07	0	1.74321E-07	0.1743215
397766.283767977.28	397766.28	3767977	0	0	0.000322404	0	0.00026867	0	0.00053734	0.00053734	0	0	4.32442E-09	9.55103E-08	0	9.98347E-08	0.0998347
397866.283767977.28	397866.28	3767977	0	0	0.000196752	0	0.00016396	0	0.00032792	0.00032792	0	0	2.63904E-09	5.82866E-08	0	6.09257E-08	0.0609257
396166.283768077.28	396166.28	3768077	0	0	3.26282E-05	0	2.71902E-05	0	5.43804E-05	5.43804E-05	0	0	4.37643E-10	9.66591E-09	0	1.01036E-08	0.0101036
396266.283768077.28	396266.28	3768077	0	0	3.73607E-05	0	3.11339E-05	0	6.22678E-05	6.22678E-05	0	0	5.0112E-10	1.10679E-08	0	1.1569E-08	0.011569
396366.283768077.28	396366.28	3768077	0	0	4.38395E-05	0	3.65329E-05	0	7.30658E-05	7.30658E-05	0	0	5.8802E-10	1.29872E-08	0	1.35752E-08	0.0135752
396466.283768077.28	396466.28	3768077	0	0	5.24879E-05	0	4.37399E-05	0	8.74799E-05	8.74799E-05	0	0	7.04022E-10	1.55492E-08	0	1.62532E-08	0.0162532
397466.283768077.28	397466.28	3768077	0	0	0.018197691	0	0.015164742	0	0.030329484	0.030329484	0	0	2.44086E-07	5.39095E-06	0	5.63504E-06	5.6350395
397566.283768077.28	397566.28	3768077	0	0	0.00225689	0	0.001880742	0	0.003761483	0.003761483	0	0	3.02717E-08	6.6859E-07	0	6.98861E-07	0.6988614
397666.283768077.28	397666.28	3768077	0	0	0.000800745	0	0.000667288	0	0.001334575	0.001334575	0	0	1.07404E-08	2.37216E-07	0	2.47956E-07	0.2479562
397766.283768077.28	397766.28	3768077	0	0	0.000400807	0	0.000334006	0	0.000668012	0.000668012	0	0	5.37604E-09	1.18737E-07	0	1.24113E-07	0.1241127
397866.283768077.28	397866.28	3768077	0	0	0.000233039	0	0.0001942	0	0.000388399	0.000388399	0	0	3.12576E-09	6.90365E-08	0	7.21623E-08	0.0721623
396166.283768177.28	396166.28	3768177	0	0	3.2341E-05	0	2.69508E-05	0	5.39016E-05	5.39016E-05	0	0	4.3379E-10	9.58081E-09	0	1.00146E-08	0.0100146
396266.283768177.28	396266.28	3768177	0	0	3.71566E-05	0	3.09638E-05	0	6.19276E-05	6.19276E-05	0	0	4.98382E-10	1.10074E-08	0	1.15058E-08	0.0115058
396366.283768177.28	396366.28	3768177	0	0	4.35295E-05	0	3.62746E-05	0	7.25492E-05	7.25492E-05	0	0	5.83862E-10	1.28954E-08	0	1.34792E-08	0.0134792
396466.283768177.28	396466.28	3768177	0	0	5.16563E-05	0	4.3047E-05	0	8.60939E-05	8.60939E-05	0	0	6.92868E-10	1.53029E-08	0	1.59957E-08	0.0159957
397466.283768177.28	397466.28	3768177	0	0	0.006930092	0	0.005775076	0	0.011550153	0.011550153	0	0	9.29535E-08	2.053E-06	0	2.14595E-06	2.1459503
397566.283768177.28	397566.28	3768177	0	0	0.002290441	0	0.0019087	0	0.003817401	0.003817401	0	0	3.07217E-08	6.78529E-07	0	7.09251E-07	0.7092506
397666.283768177.28	397666.28	3768177	0	0	0.000903627	0	0.000753022	0	0.001506045	0.001506045	0	0	1.21204E-08	2.67694E-07	0	2.79814E-07	0.2798142
397766.283768177.28	397766.28	3768177	0	0	0.000467954	0	0.000389961	0	0.000779923	0.000779923	0	0	6.27667E-09	1.38628E-07	0	1.44905E-07	0.1449051

Garvey Reservoir Rehab - Unmitigated Proposed Pump Station - 3rd Trimester S			Demolition - 2025	Demolition - 2026	Site Preparation - 203	Site Preparation - 202	Grading - 2034	Grading - 2026	Infrastructure - 203	Infrastructure - 203	Paving - 2025	Architectural Coating - 2	Child Risk				
Unique Identifier	X (UTM)	Y (UTM)	1900	1900	2034	1900	2034	1900	2034	2035	1900	1900	3rd Trimester	0<2	2<16	Total	per million
397866.283768177.28	397866.28	3768177	0	0	0.000262666	0	0.000218889	0	0.000437777	0.000437777	0	0	3.52315E-09	7.78133E-08	0	8.13365E-08	0.0813365
396166.283768277.28	396166.28	3768277	0	0	3.17664E-05	0	2.6472E-05	0	5.2944E-05	5.2944E-05	0	0	4.26084E-10	9.41061E-09	0	9.83669E-09	0.0098367
396266.283768277.28	396266.28	3768277	0	0	3.62192E-05	0	3.01826E-05	0	6.03653E-05	6.03653E-05	0	0	4.85808E-10	1.07297E-08	0	1.12155E-08	0.0112155
396366.283768277.28	396366.28	3768277	0	0	4.23048E-05	0	3.5254E-05	0	7.0508E-05	7.0508E-05	0	0	5.67436E-10	1.25325E-08	0	1.31E-08	0.0131
396466.283768277.28	396466.28	3768277	0	0	5.00915E-05	0	4.17429E-05	0	8.34858E-05	8.34858E-05	0	0	6.71878E-10	1.48393E-08	0	1.55112E-08	0.0155112
397366.283768277.28	397366.28	3768277	0	0	0.001949432	0	0.001624526	0	0.003249053	0.003249053	0	0	2.61478E-08	5.77507E-07	0	6.03655E-07	0.6036548
397466.283768277.28	397466.28	3768277	0	0	0.002288936	0	0.001907447	0	0.003814893	0.003814893	0	0	3.07016E-08	6.78083E-07	0	7.08785E-07	0.7087847
397566.283768277.28	397566.28	3768277	0	0	0.001552858	0	0.001294048	0	0.002588096	0.002588096	0	0	2.08285E-08	4.60025E-07	0	4.80853E-07	0.4808531
397666.283768277.28	397666.28	3768277	0	0	0.000815547	0	0.000679623	0	0.001359245	0.001359245	0	0	1.0939E-08	2.41601E-07	0	2.5254E-07	0.2525398
397766.283768277.28	397766.28	3768277	0	0	0.000459713	0	0.000383095	0	0.000766189	0.000766189	0	0	6.16615E-09	1.36187E-07	0	1.42353E-07	0.1423534
397866.283768277.28	397866.28	3768277	0	0	0.000290676	0	0.00024223	0	0.000484459	0.000484459	0	0	3.89884E-09	8.61108E-08	0	9.00097E-08	0.0900097
396166.283768377.28	396166.28	3768377	0	0	3.06854E-05	0	2.55711E-05	0	5.11423E-05	5.11423E-05	0	0	4.11583E-10	9.09035E-09	0	9.50193E-09	0.0095019
396266.283768377.28	396266.28	3768377	0	0	3.51683E-05	0	2.9307E-05	0	5.86139E-05	5.86139E-05	0	0	4.71714E-10	1.04184E-08	0	1.08901E-08	0.0108901
396366.283768377.28	396366.28	3768377	0	0	4.07777E-05	0	3.39815E-05	0	6.79629E-05	6.79629E-05	0	0	5.46953E-10	1.20802E-08	0	1.26271E-08	0.0126271
396466.283768377.28	396466.28	3768377	0	0	4.80201E-05	0	4.00167E-05	0	8.00334E-05	8.00334E-05	0	0	6.44094E-10	1.42256E-08	0	1.48697E-08	0.0148697
397266.283768377.28	397266.28	3768377	0	0	0.000589569	0	0.000491307	0	0.000982615	0.000982615	0	0	7.9079E-09	1.74656E-07	0	1.82564E-07	0.182564
397366.283768377.28	397366.28	3768377	0	0	0.000911338	0	0.000759448	0	0.001518897	0.001518897	0	0	1.22238E-08	2.69978E-07	0	2.82202E-07	0.282202
397466.283768377.28	397466.28	3768377	0	0	0.001099608	0	0.00091634	0	0.00183268	0.00183268	0	0	1.47491E-08	3.25752E-07	0	3.40501E-07	0.3405011
397566.283768377.28	397566.28	3768377	0	0	0.000960431	0	0.00080036	0	0.001600719	0.001600719	0	0	1.28823E-08	2.84522E-07	0	2.97404E-07	0.2974042
397666.283768377.28	397666.28	3768377	0	0	0.000668917	0	0.000557431	0	0.001114861	0.001114861	0	0	8.9722E-09	1.98162E-07	0	2.07135E-07	0.2071346
397766.283768377.28	397766.28	3768377	0	0	0.000433413	0	0.000361177	0	0.000722355	0.000722355	0	0	5.81338E-09	1.28396E-07	0	1.34209E-07	0.1342092
397866.283768377.28	397866.28	3768377	0	0	0.000296943	0	0.000247452	0	0.000494904	0.000494904	0	0	3.9829E-09	8.79674E-08	0	9.19503E-08	0.0919503
396166.283768477.28	396166.28	3768477	0	0	2.95892E-05	0	2.46577E-05	0	4.93153E-05	4.93153E-05	0	0	3.9688E-10	8.76561E-09	0	9.16249E-09	0.0091625
396266.283768477.28	396266.28	3768477	0	0	3.3921E-05	0	2.82675E-05	0	5.6535E-05	5.6535E-05	0	0	4.54983E-10	1.00489E-08	0	1.05039E-08	0.0105039
396366.283768477.28	396366.28	3768477	0	0	3.90843E-05	0	3.25703E-05	0	6.51406E-05	6.51406E-05	0	0	5.24239E-10	1.15785E-08	0	1.21027E-08	0.0121027
396466.283768477.28	396466.28	3768477	0	0	4.54195E-05	0	3.78496E-05	0	7.56991E-05	7.56991E-05	0	0	6.09213E-10	1.34552E-08	0	1.40645E-08	0.0140645
397166.283768477.28	397166.28	3768477	0	0	0.000256392	0	0.00021366	0	0.00042732	0.00042732	0	0	3.43899E-09	7.59545E-08	0	7.93935E-08	0.0793935
397266.283768477.28	397266.28	3768477	0	0	0.000380713	0	0.000317261	0	0.000634522	0.000634522	0	0	5.10652E-09	1.12784E-07	0	1.1789E-07	0.1178905
397366.283768477.28	397366.28	3768477	0	0	0.000524305	0	0.000436921	0	0.000873841	0.000873841	0	0	7.03251E-09	1.55322E-07	0	1.62355E-07	0.1623545
397466.283768477.28	397466.28	3768477	0	0	0.000619914	0	0.000516595	0	0.00103319	0.00103319	0	0	8.31492E-09	1.83646E-07	0	1.91961E-07	0.1919606
397566.283768477.28	397566.28	3768477	0	0	0.000588231	0	0.000490192	0	0.000980384	0.000980384	0	0	7.88995E-09	1.7426E-07	0	1.8215E-07	0.1821496
397666.283768477.28	397666.28	3768477	0	0	0.00047224	0	0.000393533	0	0.000787067	0.000787067	0	0	6.33417E-09	1.39898E-07	0	1.46232E-07	0.1462324
397766.283768477.28	397766.28	3768477	0	0	0.000363787	0	0.000303156	0	0.000606311	0.000606311	0	0	4.87948E-09	1.0777E-07	0	1.12649E-07	0.1126491
397866.283768477.28	397866.28	3768477	0	0	0.000262621	0	0.000218851	0	0.000437702	0.000437702	0	0	3.52254E-09	7.77999E-08	0	8.13224E-08	0.0813224
396166.283768577.28	396166.28	3768577	0	0	2.84174E-05	0	2.36812E-05	0	4.73624E-05	4.73624E-05	0	0	3.81163E-10	8.41848E-09	0	8.79965E-09	0.0087996
396266.283768577.28	396266.28	3768577	0	0	3.11163E-05	0	2.59302E-05	0	5.18605E-05	5.18605E-05	0	0	4.17363E-10	9.218E-09	0	9.63537E-09	0.0096354
396366.283768577.28	396366.28	3768577	0	0	3.65291E-05	0	3.04409E-05	0	6.08819E-05	6.08819E-05	0	0	4.89966E-10	1.08215E-08	0	1.13115E-08	0.0113115
396466.283768577.28	396466.28	3768577	0	0	4.25921E-05	0	3.54934E-05	0	7.09868E-05	7.09868E-05	0	0	5.71289E-10	1.26176E-08	0	1.31889E-08	0.0131889
396566.283768577.28	396566.28	3768577	0	0	5.00234E-05	0	4.16862E-05	0	8.33724E-05	8.33724E-05	0	0	6.70965E-10	1.48191E-08	0	1.54901E-08	0.0154901
396866.283768577.28	396866.28	3768577	0	0	8.89868E-05	0	7.41557E-05	0	0.000148311	0.000148311	0	0	1.19358E-09	2.63618E-08	0	2.75554E-08	0.0275554
396966.283768577.28	396966.28	3768577	0	0	0.000112505	0	9.37545E-05	0	0.000187509	0.000187509	0	0	1.50904E-09	3.3329E-08	0	3.48381E-08	0.0348381
397066.283768577.28	397066.28	3768577	0	0	0.000145141	0	0.000120951	0	0.000241902	0.000241902	0	0	1.94678E-09	4.29972E-08	0	4.4944E-08	0.044944
397166.283768577.28	397166.28	3768577	0	0	0.000194182	0	0.000161818	0	0.000323636	0.000323636	0	0	2.60457E-09	5.75252E-08	0	6.01297E-08	0.0601297
397266.283768577.28	397266.28	3768577	0	0	0.000259128	0	0.00021594	0	0.000431881	0.000431881	0	0	3.4757E-09	7.67652E-08	0	8.02409E-08	0.0802409
397366.283768577.28	397366.28	3768577	0	0	0.00033676	0	0.000280634	0	0.000561267	0.000561267	0	0	4.51697E-09	9.97632E-08	0	1.0428E-07	0.1042801
397466.283768577.28	397466.28	3768577	0	0	0.000389679	0	0.000324733	0	0.000649465	0.000649465	0	0	5.22678E-09	1.1544E-07	0	1.20667E-07	0.1206668
397566.283768577.28	397566.28	3768577	0	0	0.000393618	0	0.000328015	0	0.00065603	0.00065603	0	0	5.27961E-09	1.16607E-07	0	1.21886E-07	0.1218865
397666.283768577.28	397666.28	3768577	0	0	0.000347095	0	0.000289246	0	0.000578491	0.000578491	0	0	4.65559E-09	1.02825E-07	0	1.0748E-07	0.1074802
397766.283768577.28	397766.28	3768577	0	0	0.000278519	0	0.000232099	0	0.000464199	0.000464199	0	0	3.73579E-09	8.25096E-08	0	8.62454E-08	0.0862454
397866.283768577.28	397866.28	3768577	0	0	0.000219356	0	0.000182797	0	0.000365594	0.000365594	0	0	2.94223E-09	6.49829E-08	0	6.79251E-08	0.0679251
396166.283768677.28	396166.28	3768677	0	0	2.70642E-05	0	2.25535E-05	0	4.5107E-05	4.5107E-05	0	0	3.63013E-10	8.0176E-09	0	8.38062E-09	0.0083806
396266.283768677.28	396266.28	3768677	0	0	3.05115E-05	0	2.54262E-05	0	5.08525E-05	5.08525E-05	0	0	4.09251E-10	9.03884E-09	0	9.44809E-09	0.0094481
396366.283768677.28	396366.28	3768677	0	0	3.44804E-05	0	2.87337E-05	0	5.74673E-05	5.74673E-05	0	0	4.62486E-10	1.02146E-08	0	1.06771E-08	0.0106771
396466.283768677.28	396466.28	3768677	0	0	3.95908E-05	0	3.29924E-05	0	6.59847E-05	6.59847E-05	0	0	5.31033E-10	1.17285E-08	0	1.22596E-08	0.0122596
396566.283768677.28	396566.28	3768677	0	0	4.58731E-05	0	3.82276E-05	0	7.64551E-05	7.64551E-05	0	0	6.15297E-10	1.35896E-08	0	1.42049E-08	0.0142049
396666.283768677.28	396666.28	3768677	0	0	5.36824E-05	0	4.47353E-05	0	8.94706E-05	8.94706E-05	0	0	7.20043E-10	1.59031E-08	0	1.66231E-08	0.0166231
396766.283768677.28	396766.28	3768677	0	0	6.35782E-05	0	5.29818E-05	0	0.000105964	0.000105964	0	0	8.52776E-10	1.88346E-08	0	1.96874E-08	0.0196874
396866.283768677.28	396866.28	3768677	0	0	7.68079E-05	0	6.40066E-05	0	0.000128013	0.000128013	0	0	1.03023E-09	2.27539E-08	0	2.37841E-08	0.0237841
396966.283768677.28	396966.28	3768677	0	0	9.43996E-05	0	7.86664E-05	0	0.000157333	0.000157333	0	0	1.26618E-09	2.79653E-08	0	2.92315E-08	0.0292315
397066.283768677.28	397066.28	3768677	0	0	0.000118213	0	9.85109E-05	0	0.000197022	0.000197022	0	0	1.5856E-09	3.50199E-08	0	3.66055E-08	0.0366055
397166.283768677.28	397166.28	3768677	0	0	0.000148657	0	0.00012388	0	0.000247761	0.000247761	0	0	1.99393E-09	4.40386E-08	0	4.60325E-08	0.0460325
397366.283768677.28	397366.28	3768677	0	0	0.000233145	0	0.000194288	0	0.000388575	0.000388575	0	0	3.12718E-09	6.90678E-08	0	7.2195E-08	0.072195
397466.283768677.28	397466.28	3768677	0	0	0.00026631	0	0.000221925	0	0.00044385	0.00044385	0	0	3.57203E-09	7.88928E-08	0	8.24648E-08	0.0824648
397566.283768677.28	397566.28	3768677	0	0	0.000275193	0	0.000229328	0	0.000458655	0.000458655	0	0	3.69117E-09	8.15242E-08	0	8.52154E-08	0.0852154
397666.283768677.28	397666.28	3768677	0	0	0.00025711	0	0.000214258	0	0.000428517	0.000428517	0	0	3.44862E-09	7.61672E-08	0	7.96159E-08	0.0796159
397766.283768677.28	397766.28	3768677	0	0	0.000220014	0	0.000183345	0	0.00036669	0.00036669	0	0	2.95105E-09	6.51777E-08	0	6.81288E-08	0.0681288
397866.283768677.28	397866.28	3768677	0	0	0.000182525	0	0.000152104	0	0.000304208	0.000304208	0	0	2.44821E-09	5.40718E-08	0	5.652E-08	0.05652
396166.283768777.28	396166.28	3768777	0	0	2.58471E-05	0	2.15392E-05	0	4.30785E-05	4.30785E-05	0	0	3.46687E-10	7.65703E-09	0	8.00372E-09	0.0080037
396266.283768777.28	396266.28	3768777	0	0	2.87727E-05	0	2.39773E-05	0	4.79545E-05	4.79545E-05	0	0	3.85929E-10	8.52374E-09	0	8.90967E-09	0.0089097
396366.283768777.28	396366.28	3768777	0	0	3.25375E-05	0	2.71146E-05	0	5.42292E-05	5.42292E-05	0	0	4.36427E-10	9.63904E-09	0	1.00755E-08	0.0100755
396466.283768777.28	396466.28	3768777	0	0	3.6771E-05	0	3.06425E-05	0	6.1285E-05	6.1285E-05	0	0	4.93211E-10	1.08932E-08	0	1.13864E-08	0.0113864
396566.283768777.28	396566.28	3768777	0	0	4.17832E-05	0	3.48193E-05	0	6.96387E-05	6.96387E-05	0	0	5.60439E-10	1.2378E-08	0	1.29385E-08	0.0129385
396666.283768777.28	396666.28	3768777	0	0	4.82166E-05	0	4.01805E-05	0	8.0361E-05	8.0361E-05	0	0	6.46731E-10	1.42839E-08	0	1.49306E-08	0.0149306
396766.283768777.28	396766.28	3768777	0	0	5.64342E-05	0	4.70285E-05	0	9.40569E-05	9.40569E-05	0	0	7.56953E-10	1.67183E-08	0	1.74752E-08	0.0174752
396866.283768777.28	396866.28	3768777	0	0	6.69272E-05	0	5.57727E-05	0	0.000111545	0.000111545	0	0	8.97696E-10	1.98268E-08	0	2.07245E-08	0.0207245
396966.283768777.28	396966.28	3768777	0	0	8.01947E-05	0	6.68289E-05	0	0.000133658	0.000133658	0	0	1.07565E-09	2.37572E-08	0	2.48328E-08	0.0248328
397066.283768777.28	397066.28	3768777	0	0	9.70683E-05	0	8.08902E-05	0	0.00016178	0.00016178	0	0	1.30198E-09	2.87559E-08	0	3.00579E-08	0.0300579

Garvey Reservoir Rehab - Unmitigated Proposed Pump Station - 3rd Trimester S			Demolition - 2025	Demolition - 2026	Site Preparation - 203	Site Preparation - 202	Grading - 2034	Grading - 2026	Infrastructure - 203	Infrastructure - 203	Paving - 2025	Architectural Coating - 2	Child Risk				
Unique Identifier	X (UTM)	Y (UTM)	1900	1900	2034	1900	2034	1900	2034	2035	1900	1900	3rd Trimester	0<2	2<16	Total	per million
397166.283768777.28	397166.28	3768777	0	0	0.000117291	0	9.77423E-05	0	0.000195485	0.000195485	0	0	1.57322E-09	3.47467E-08	0	3.63199E-08	0.0363199
397266.283768777.28	397266.28	3768777	0	0	0.000143304	0	0.00011942	0	0.00023884	0.00023884	0	0	1.92214E-09	4.2453E-08	0	4.43751E-08	0.0443751
397366.283768777.28	397366.28	3768777	0	0	0.000169378	0	0.000141148	0	0.000282297	0.000282297	0	0	2.27187E-09	5.01772E-08	0	5.24491E-08	0.0524491
397466.283768777.28	397466.28	3768777	0	0	0.000189321	0	0.000157767	0	0.000315535	0.000315535	0	0	2.53937E-09	5.60851E-08	0	5.86245E-08	0.0586245
397566.283768777.28	397566.28	3768777	0	0	0.000197486	0	0.000164571	0	0.000329143	0.000329143	0	0	2.64888E-09	5.85039E-08	0	6.11527E-08	0.0611527
397666.283768777.28	397666.28	3768777	0	0	0.000191173	0	0.000159311	0	0.000318622	0.000318622	0	0	2.56421E-09	5.66338E-08	0	5.9198E-08	0.059198
397766.283768777.28	397766.28	3768777	0	0	0.000172893	0	0.000144078	0	0.000288156	0.000288156	0	0	2.31902E-09	5.12186E-08	0	5.35376E-08	0.0535376
397866.283768777.28	397866.28	3768777	0	0	0.000150327	0	0.000125273	0	0.000250545	0.000250545	0	0	2.01634E-09	4.45335E-08	0	4.65499E-08	0.0465499
396166.283768877.28	396166.28	3768877	0	0	2.43805E-05	0	2.03171E-05	0	4.06341E-05	4.06341E-05	0	0	3.27016E-10	7.22256E-09	0	7.54958E-09	0.0075496
396266.283768877.28	396266.28	3768877	0	0	2.71474E-05	0	2.26228E-05	0	4.52456E-05	4.52456E-05	0	0	3.64128E-10	8.04224E-09	0	8.40637E-09	0.0084064
396366.283768877.28	396366.28	3768877	0	0	3.01335E-05	0	2.51112E-05	0	5.02225E-05	5.02225E-05	0	0	4.04181E-10	8.92686E-09	0	9.33104E-09	0.009331
396466.283768877.28	396466.28	3768877	0	0	3.41326E-05	0	2.84439E-05	0	5.68877E-05	5.68877E-05	0	0	4.57822E-10	1.01116E-08	0	1.05694E-08	0.0105694
396566.283768877.28	396566.28	3768877	0	0	3.84796E-05	0	3.20663E-05	0	6.41326E-05	6.41326E-05	0	0	5.16127E-10	1.13993E-08	0	1.19155E-08	0.0119155
396666.283768877.28	396666.28	3768877	0	0	4.36807E-05	0	3.64006E-05	0	7.28012E-05	7.28012E-05	0	0	5.8589E-10	1.29401E-08	0	1.3526E-08	0.013526
396766.283768877.28	396766.28	3768877	0	0	5.05148E-05	0	4.20957E-05	0	8.41913E-05	8.41913E-05	0	0	6.77556E-10	1.49647E-08	0	1.56423E-08	0.0156423
396866.283768877.28	396866.28	3768877	0	0	5.97302E-05	0	4.97752E-05	0	9.95504E-05	9.95504E-05	0	0	8.01163E-10	1.76947E-08	0	1.84959E-08	0.0184959
396966.283768877.28	396966.28	3768877	0	0	6.98982E-05	0	5.82485E-05	0	0.000116497	0.000116497	0	0	9.37546E-10	2.07069E-08	0	2.16445E-08	0.0216445
397066.283768877.28	397066.28	3768877	0	0	8.14043E-05	0	6.78369E-05	0	0.000135674	0.000135674	0	0	1.09188E-09	2.41155E-08	0	2.52074E-08	0.0252074
397166.283768877.28	397166.28	3768877	0	0	9.54656E-05	0	7.95546E-05	0	0.000159109	0.000159109	0	0	1.28048E-09	2.82811E-08	0	2.95616E-08	0.0295616
397266.283768877.28	397266.28	3768877	0	0	0.000112468	0	9.3723E-05	0	0.000187446	0.000187446	0	0	1.50853E-09	3.33178E-08	0	3.48264E-08	0.0348264
397366.283768877.28	397366.28	3768877	0	0	0.000128615	0	0.00010718	0	0.000214359	0.000214359	0	0	1.72512E-09	3.81015E-08	0	3.98267E-08	0.0398267
397466.283768877.28	397466.28	3768877	0	0	0.000142269	0	0.000118557	0	0.000237114	0.000237114	0	0	1.90825E-09	4.21462E-08	0	4.40544E-08	0.0440544
397566.283768877.28	397566.28	3768877	0	0	0.000149375	0	0.000124479	0	0.000248958	0.000248958	0	0	2.00357E-09	4.42513E-08	0	4.62549E-08	0.0462549
397666.283768877.28	397666.28	3768877	0	0	0.000146653	0	0.000122211	0	0.000244422	0.000244422	0	0	1.96706E-09	4.34451E-08	0	4.54122E-08	0.0454122
397766.283768877.28	397766.28	3768877	0	0	0.000137226	0	0.000114355	0	0.00022871	0.00022871	0	0	1.84062E-09	4.06524E-08	0	4.2493E-08	0.042493
397866.283768877.28	397866.28	3768877	0	0	0.000124132	0	0.000103444	0	0.000206887	0.000206887	0	0	1.66499E-09	3.67735E-08	0	3.84385E-08	0.0384385
3964253767739	396425	3767739	0	0	4.7128E-05	0	3.92733E-05	0	7.85467E-05	7.85467E-05	0	0	6.32129E-10	1.39614E-08	0	1.45935E-08	0.0145935
3964753767739	396475	3767739	0	0	5.14371E-05	0	4.28643E-05	0	8.57285E-05	8.57285E-05	0	0	6.89927E-10	1.52379E-08	0	1.59279E-08	0.0159279
3965253767739	396525	3767739	0	0	5.5852E-05	0	4.65434E-05	0	9.30867E-05	9.30867E-05	0	0	7.49145E-10	1.65458E-08	0	1.7295E-08	0.017295
3965753767739	396575	3767739	0	0	6.15975E-05	0	5.13313E-05	0	0.000102663	0.000102663	0	0	8.26209E-10	1.82479E-08	0	1.90741E-08	0.0190741
3966253767739	396625	3767739	0	0	6.66475E-05	0	5.55396E-05	0	0.000111079	0.000111079	0	0	8.93944E-10	1.97439E-08	0	2.06379E-08	0.0206379
3966753767739	396675	3767739	0	0	7.4041E-05	0	6.17008E-05	0	0.000123402	0.000123402	0	0	9.93114E-10	2.19342E-08	0	2.29273E-08	0.0229273
3967253767739	396725	3767739	0	0	8.48364E-05	0	7.0697E-05	0	0.000141394	0.000141394	0	0	1.13791E-09	2.51323E-08	0	2.62702E-08	0.0262702
3967753767739	396775	3767739	0	0	9.49213E-05	0	7.91011E-05	0	0.000158202	0.000158202	0	0	1.27318E-09	2.81198E-08	0	2.9393E-08	0.029393
3968253767739	396825	3767739	0	0	0.000109504	0	9.12535E-05	0	0.000182507	0.000182507	0	0	1.46878E-09	3.24399E-08	0	3.39087E-08	0.0339087
3968753767739	396875	3767739	0	0	0.000127066	0	0.000105888	0	0.000211776	0.000211776	0	0	1.70433E-09	3.76424E-08	0	3.93468E-08	0.0393468
3969253767739	396925	3767739	0	0	0.000146615	0	0.00012218	0	0.000244359	0.000244359	0	0	1.96656E-09	4.34339E-08	0	4.54005E-08	0.0454005
3969753767739	396975	3767739	0	0	0.000169499	0	0.000141249	0	0.000282498	0.000282498	0	0	2.27349E-09	5.0213E-08	0	5.24865E-08	0.0524865
3970253767739	397025	3767739	0	0	0.000195391	0	0.000162826	0	0.000325652	0.000325652	0	0	2.62079E-09	5.78835E-08	0	6.05043E-08	0.0605043
3970753767739	397075	3767739	0	0	0.000223393	0	0.000186161	0	0.000372322	0.000372322	0	0	2.99638E-09	6.61788E-08	0	6.91752E-08	0.0691752
3971253767739	397125	3767739	0	0	0.000253527	0	0.000211272	0	0.000422544	0.000422544	0	0	3.40056E-09	7.51057E-08	0	7.85062E-08	0.0785062
3971753767739	397175	3767739	0	0	0.000285928	0	0.000238273	0	0.000476547	0.000476547	0	0	3.83516E-09	8.47044E-08	0	8.85396E-08	0.0885396
3972253767739	397225	3767739	0	0	0.000316636	0	0.000263863	0	0.000527727	0.000527727	0	0	4.24705E-09	9.38015E-08	0	9.80485E-08	0.0980485
3972753767739	397275	3767739	0	0	0.000346248	0	0.00028854	0	0.00057708	0.00057708	0	0	4.64423E-09	1.02574E-07	0	1.07218E-07	0.107218
3973253767739	397325	3767739	0	0	0.000357898	0	0.000298248	0	0.000596496	0.000596496	0	0	4.80049E-09	1.06025E-07	0	1.10825E-07	0.1108255
3973753767739	397375	3767739	0	0	0.000357066	0	0.000297555	0	0.00059511	0.00059511	0	0	4.78934E-09	1.05779E-07	0	1.10568E-07	0.1105679
3974253767739	397425	3767739	0	0	0.000349174	0	0.000290978	0	0.000581956	0.000581956	0	0	4.68347E-09	1.03441E-07	0	1.08124E-07	0.108124
3974753767739	397475	3767739	0	0	0.000341463	0	0.000284552	0	0.000569104	0.000569104	0	0	4.58005E-09	1.01156E-07	0	1.05736E-07	0.1057362
3975253767739	397525	3767739	0	0	0.000314996	0	0.000262496	0	0.000524993	0.000524993	0	0	4.22504E-09	9.33155E-08	0	9.75405E-08	0.0975405
3964253767789	396425	3767789	0	0	4.78386E-05	0	3.98655E-05	0	7.9731E-05	7.9731E-05	0	0	6.41661E-10	1.41719E-08	0	1.48136E-08	0.0148136
3964753767789	396475	3767789	0	0	5.20343E-05	0	4.33619E-05	0	8.67239E-05	8.67239E-05	0	0	6.97938E-10	1.54148E-08	0	1.61128E-08	0.0161128
3965253767789	396525	3767789	0	0	5.6608E-05	0	4.71734E-05	0	9.43467E-05	9.43467E-05	0	0	7.59285E-10	1.67698E-08	0	1.75291E-08	0.0175291
3965753767789	396575	3767789	0	0	6.18697E-05	0	5.15581E-05	0	0.000103116	0.000103116	0	0	8.29859E-10	1.83285E-08	0	1.91584E-08	0.0191584
3966253767789	396625	3767789	0	0	6.85601E-05	0	5.71334E-05	0	0.000114267	0.000114267	0	0	9.19599E-10	2.03105E-08	0	2.12301E-08	0.0212301
3966753767789	396675	3767789	0	0	7.70423E-05	0	6.42019E-05	0	0.000128404	0.000128404	0	0	1.03337E-09	2.28233E-08	0	2.38567E-08	0.0238567
3967253767789	396725	3767789	0	0	8.8503E-05	0	7.37525E-05	0	0.000147505	0.000147505	0	0	1.18709E-09	2.62185E-08	0	2.74056E-08	0.0274056
3967753767789	396775	3767789	0	0	0.000100705	0	8.39204E-05	0	0.000167841	0.000167841	0	0	1.35075E-09	2.98331E-08	0	3.11839E-08	0.0311839
3968253767789	396825	3767789	0	0	0.000116731	0	9.72762E-05	0	0.000194552	0.000194552	0	0	1.56572E-09	3.4581E-08	0	3.61467E-08	0.0361467
3968753767789	396875	3767789	0	0	0.000136001	0	0.000113335	0	0.000226669	0.000226669	0	0	1.82419E-09	4.02896E-08	0	4.21138E-08	0.0421138
3969253767789	396925	3767789	0	0	0.00015921	0	0.000132675	0	0.00026535	0.00026535	0	0	2.13549E-09	4.7165E-08	0	4.93005E-08	0.0493005
3969753767789	396975	3767789	0	0	0.000188255	0	0.000156879	0	0.000313758	0.000313758	0	0	2.52507E-09	5.57694E-08	0	5.82944E-08	0.0582944
3970253767789	397025	3767789	0	0	0.000222599	0	0.000185499	0	0.000370999	0.000370999	0	0	2.98573E-09	6.59437E-08	0	6.89294E-08	0.0689294
3970753767789	397075	3767789	0	0	0.000262288	0	0.000218574	0	0.000437147	0.000437147	0	0	3.51808E-09	7.77013E-08	0	8.12194E-08	0.0812194
3971253767789	397125	3767789	0	0	0.000307458	0	0.000256215	0	0.000512431	0.000512431	0	0	4.12395E-09	9.10827E-08	0	9.52066E-08	0.0952066
3971753767789	397175	3767789	0	0	0.000358245	0	0.000298538	0	0.000597076	0.000597076	0	0	4.80515E-09	1.06128E-07	0	1.10933E-07	0.1109331
3972253767789	397225	3767789	0	0	0.000410386	0	0.000341988	0	0.000683976	0.000683976	0	0	5.50451E-09	1.21574E-07	0	1.27079E-07	0.1270787
3972753767789	397275	3767789	0	0	0.000466222	0	0.000388519	0	0.000777037	0.000777037	0	0	6.25345E-09	1.38116E-07	0	1.44369E-07	0.144369
3973253767789	397325	3767789	0	0	0.000499765	0	0.000416471	0	0.000832942	0.000832942	0	0	6.70337E-09	1.48052E-07	0	1.54756E-07	0.1547558
3973753767789	397375	3767789	0	0	0.000503659	0	0.000419716	0	0.000839431	0.000839431	0	0	6.75559E-09	1.49206E-07	0	1.55961E-07	0.1559614
3974253767789	397425	3767789	0	0	0.000488395	0	0.000406996	0	0.000813992	0.000813992	0	0	6.55086E-09	1.44684E-07	0	1.51235E-07	0.151235
3974753767789	397475	3767789	0	0	0.000472051	0	0.000393376	0	0.000786752	0.000786752	0	0	6.33163E-09	1.39842E-07	0	1.46174E-07	0.1461739
3975253767789	397525	3767789	0	0	0.000423857	0	0.000353214	0	0.000706429	0.000706429	0	0	5.68521E-09	1.25565E-07	0	1.3125E-07	0.1312503
3964253767839	396425	3767839	0	0	4.84132E-05	0	4.03443E-05	0	8.06886E-05	8.06886E-05	0	0	6.49367E-10	1.43421E-08	0	1.49915E-08	0.0149915
3964753767839	396475	3767839	0	0	5.28886E-05	0	4.40738E-05	0	8.81477E-05	8.81477E-05	0	0	7.09396E-10	1.56679E-08	0	1.63773E-08	0.0163773
3965253767839	396525	3767839	0	0	5.71599E-05	0	4.76332E-05	0	9.52665E-05	9.52665E-05	0	0	7.66687E-10	1.69333E-08	0	1.77E-08	0.0177
3965753767839	396575	3767839	0	0	6.30868E-05	0	5.25723E-05	0	0.000105145	0.000105145	0	0	8.46185E-10	1.86891E-08	0	1.95353E-08	0.0195353
3966253767839	396625	3767839	0	0	7.02611E-05	0	5.85509E-05	0	0.000117102	0.000117102	0	0	9.42414E-10	2.08144E-08	0	2.17568E-08	0.0217568

Garvey Reservoir Rehab - Unmitigated Proposed Pump Station - 3rd Trimester S			Demolition - 2025	Demolition - 2026	Site Preparation - 203	Site Preparation - 202	Grading - 2034	Grading - 2026	Infrastructure - 203	Infrastructure - 203	Paving - 2025	Architectural Coating - 2	Child Risk				
Unique Identifier	X (UTM)	Y (UTM)	1900	1900	2034	1900	2034	1900	2034	2035	1900	1900	3rd Trimester	0<2	2<16	Total	per million
3966753767839	396675	3767839	0	0	8.07768E-05	0	6.7314E-05	0	0.000134628	0.000134628	0	0	1.08346E-09	2.39296E-08	0	2.50131E-08	0.0250131
3967253767839	396725	3767839	0	0	9.20788E-05	0	7.67323E-05	0	0.000153465	0.000153465	0	0	1.23505E-09	2.72778E-08	0	2.85128E-08	0.0285128
3967753767839	396775	3767839	0	0	0.000105686	0	8.80721E-05	0	0.000176144	0.000176144	0	0	1.41758E-09	3.1309E-08	0	3.27265E-08	0.0327265
3968253767839	396825	3767839	0	0	0.000122779	0	0.000102316	0	0.000204632	0.000204632	0	0	1.64684E-09	3.63726E-08	0	3.80194E-08	0.0380194
3968753767839	396875	3767839	0	0	0.000144257	0	0.000120214	0	0.000240428	0.000240428	0	0	1.93492E-09	4.27352E-08	0	4.46701E-08	0.0446701
3969253767839	396925	3767839	0	0	0.000171192	0	0.00014266	0	0.000285321	0.000285321	0	0	2.29621E-09	5.07147E-08	0	5.30109E-08	0.0530109
3969753767839	396975	3767839	0	0	0.000206217	0	0.000171848	0	0.000343695	0.000343695	0	0	2.766E-09	6.10906E-08	0	6.38565E-08	0.0638565
3970253767839	397025	3767839	0	0	0.000250314	0	0.000208595	0	0.000417189	0.000417189	0	0	3.35746E-09	7.41539E-08	0	7.75113E-08	0.0775113
3970753767839	397075	3767839	0	0	0.000303512	0	0.000252927	0	0.000505854	0.000505854	0	0	4.07102E-09	8.99136E-08	0	9.39846E-08	0.0939846
3971253767839	397125	3767839	0	0	0.00036802	0	0.000306684	0	0.000613367	0.000613367	0	0	4.93626E-09	1.09024E-07	0	1.1396E-07	0.11396
3971753767839	397175	3767839	0	0	0.000453545	0	0.000377954	0	0.000755908	0.000755908	0	0	6.0834E-09	1.3436E-07	0	1.40443E-07	0.1404432
3972253767839	397225	3767839	0	0	0.000555807	0	0.000463172	0	0.000926344	0.000926344	0	0	7.45505E-09	1.64654E-07	0	1.72109E-07	0.1721093
3972753767839	397275	3767839	0	0	0.000657305	0	0.000547754	0	0.001095508	0.001095508	0	0	8.81644E-09	1.94722E-07	0	2.03539E-07	0.2035389
3973253767839	397325	3767839	0	0	0.000738119	0	0.0006151	0	0.001230199	0.001230199	0	0	9.90041E-09	2.18663E-07	0	2.28564E-07	0.2285637
3973753767839	397375	3767839	0	0	0.000764957	0	0.000637464	0	0.001274928	0.001274928	0	0	1.02604E-08	2.26614E-07	0	2.36874E-07	0.2368741
3974753767839	397475	3767839	0	0	0.000673747	0	0.000561456	0	0.001122912	0.001122912	0	0	9.03699E-09	1.99594E-07	0	2.08631E-07	0.2086305
3975253767839	397525	3767839	0	0	0.000596123	0	0.000496769	0	0.000993538	0.000993538	0	0	7.99581E-09	1.76598E-07	0	1.84594E-07	0.1845936
3964253767889	396425	3767889	0	0	4.87836E-05	0	4.0653E-05	0	8.1306E-05	8.1306E-05	0	0	6.54336E-10	1.44518E-08	0	1.51062E-08	0.0151062
3964753767889	396475	3767889	0	0	5.26316E-05	0	4.38596E-05	0	8.77193E-05	8.77193E-05	0	0	7.05948E-10	1.55918E-08	0	1.62977E-08	0.0162977
3965253767889	396525	3767889	0	0	5.78478E-05	0	4.82065E-05	0	9.64131E-05	9.64131E-05	0	0	7.75914E-10	1.71371E-08	0	1.7913E-08	0.017913
3965753767889	396575	3767889	0	0	6.44929E-05	0	5.37441E-05	0	0.000107488	0.000107488	0	0	8.65045E-10	1.91056E-08	0	1.99707E-08	0.0199707
3974753767889	397475	3767889	0	0	0.001090279	0	0.000908566	0	0.001817132	0.001817132	0	0	1.46239E-08	3.22988E-07	0	3.37612E-07	0.3376124
3975253767889	397525	3767889	0	0	0.000881892	0	0.00073491	0	0.001469821	0.001469821	0	0	1.18288E-08	2.61255E-07	0	2.73084E-07	0.273084
3964253767939	396425	3767939	0	0	4.90104E-05	0	4.0842E-05	0	8.1684E-05	8.1684E-05	0	0	6.57378E-10	1.4519E-08	0	1.51764E-08	0.0151764
3964753767939	396475	3767939	0	0	5.29566E-05	0	4.41305E-05	0	8.82611E-05	8.82611E-05	0	0	7.10309E-10	1.56881E-08	0	1.63984E-08	0.0163984
3965253767939	396525	3767939	0	0	5.84678E-05	0	4.87231E-05	0	9.74463E-05	9.74463E-05	0	0	7.84229E-10	1.73207E-08	0	1.81049E-08	0.0181049
3974753767939	397475	3767939	0	0	0.001933964	0	0.001611637	0	0.003223274	0.003223274	0	0	2.59403E-08	5.72925E-07	0	5.98865E-07	0.5988652
3975253767939	397525	3767939	0	0	0.001367657	0	0.001139714	0	0.002279428	0.002279428	0	0	1.83444E-08	4.0516E-07	0	4.23504E-07	0.4235044
3964253767989	396425	3767989	0	0	4.86475E-05	0	4.05396E-05	0	8.10792E-05	8.10792E-05	0	0	6.5251E-10	1.44115E-08	0	1.5064E-08	0.015064
3964753767989	396475	3767989	0	0	5.3191E-05	0	4.43258E-05	0	8.86516E-05	8.86516E-05	0	0	7.13452E-10	1.57575E-08	0	1.6471E-08	0.016471
3974753767989	397475	3767989	0	0	0.003642524	0	0.003035437	0	0.006070874	0.006070874	0	0	4.88573E-08	1.07908E-06	0	1.12793E-06	1.1279326
3975253767989	397525	3767989	0	0	0.002062557	0	0.001718797	0	0.003437595	0.003437595	0	0	2.76651E-08	6.1102E-07	0	6.38685E-07	0.6386849
3964253768039	396425	3768039	0	0	4.85946E-05	0	4.04955E-05	0	8.0991E-05	8.0991E-05	0	0	6.51801E-10	1.43959E-08	0	1.50477E-08	0.0150477
3964753768039	396475	3768039	0	0	5.33422E-05	0	4.44518E-05	0	8.89036E-05	8.89036E-05	0	0	7.1548E-10	1.58023E-08	0	1.65178E-08	0.0165178
3974753768039	397475	3768039	0	0	0.008847001	0	0.007372501	0	0.014745001	0.014745001	0	0	1.18665E-07	2.62087E-06	0	2.73953E-06	2.7395344
3975253768039	397525	3768039	0	0	0.00340541	0	0.002837842	0	0.005675683	0.005675683	0	0	4.56768E-08	1.00883E-06	0	1.05451E-06	1.0545085
3964253768089	396425	3768089	0	0	4.85039E-05	0	4.04199E-05	0	8.08398E-05	8.08398E-05	0	0	6.50584E-10	1.4369E-08	0	1.50196E-08	0.0150196
3964753768089	396475	3768089	0	0	5.33271E-05	0	4.44392E-05	0	8.88784E-05	8.88784E-05	0	0	7.15277E-10	1.57978E-08	0	1.65131E-08	0.0165131
3974753768089	397475	3768089	0	0	0.014528767	0	0.012107306	0	0.024214612	0.024214612	0	0	1.94875E-07	4.30406E-06	0	4.49893E-06	4.4989323
3975253768089	397525	3768089	0	0	0.004393231	0	0.003661026	0	0.007322051	0.007322051	0	0	5.89265E-08	1.30147E-06	0	1.36039E-06	1.360394
3964253768139	396425	3768139	0	0	4.86702E-05	0	4.05585E-05	0	8.1117E-05	8.1117E-05	0	0	6.52815E-10	1.44182E-08	0	1.50711E-08	0.0150711
3964753768139	396475	3768139	0	0	5.29264E-05	0	4.41053E-05	0	8.82107E-05	8.82107E-05	0	0	7.09903E-10	1.56791E-08	0	1.6389E-08	0.016389
3974253768139	397425	3768139	0	0	0.021123013	0	0.017602511	0	0.035205022	0.035205022	0	0	2.83323E-07	6.25756E-06	0	6.54089E-06	6.5408857
3974753768139	397475	3768139	0	0	0.010020809	0	0.008350674	0	0.016701348	0.016701348	0	0	1.34409E-07	2.9686E-06	0	3.10301E-06	3.103012
3975253768139	397525	3768139	0	0	0.004332858	0	0.003610715	0	0.00722143	0.00722143	0	0	5.81167E-08	1.28358E-06	0	1.3417E-06	1.3416991
3964253768189	396425	3768189	0	0	4.81032E-05	0	4.0086E-05	0	8.0172E-05	8.0172E-05	0	0	6.4521E-10	1.42503E-08	0	1.48955E-08	0.0148955
3964753768189	396475	3768189	0	0	5.23443E-05	0	4.36202E-05	0	8.72405E-05	8.72405E-05	0	0	7.02095E-10	1.55067E-08	0	1.62088E-08	0.0162088
3973753768189	397375	3768189	0	0	0.005663903	0	0.004719919	0	0.009439838	0.009439838	0	0	7.59701E-08	1.6779E-06	0	1.75387E-06	1.7538663
3974253768189	397425	3768189	0	0	0.006560658	0	0.005467215	0	0.01093443	0.01093443	0	0	8.79983E-08	1.94355E-06	0	2.03155E-06	2.0315526
3974753768189	397475	3768189	0	0	0.005589264	0	0.00465772	0	0.009315441	0.009315441	0	0	7.49689E-08	1.65579E-06	0	1.73075E-06	1.730754
3975253768189	397525	3768189	0	0	0.003473494	0	0.002894578	0	0.005789157	0.005789157	0	0	4.65901E-08	1.029E-06	0	1.07559E-06	1.0755912
3964253768239	396425	3768239	0	0	4.73926E-05	0	3.94938E-05	0	7.89877E-05	7.89877E-05	0	0	6.35678E-10	1.40398E-08	0	1.46754E-08	0.0146754
3964753768239	396475	3768239	0	0	5.15732E-05	0	4.29777E-05	0	8.59553E-05	8.59553E-05	0	0	6.91752E-10	1.52782E-08	0	1.597E-08	0.01597
3973753768239	397375	3768239	0	0	0.003016857	0	0.002514048	0	0.005028096	0.005028096	0	0	4.04652E-08	8.93725E-07	0	9.34191E-07	0.9341905
3974253768239	397425	3768239	0	0	0.003139886	0	0.002616572	0	0.005233143	0.005233143	0	0	4.21154E-08	9.30172E-07	0	9.72287E-07	0.9722872
3974753768239	397475	3768239	0	0	0.002914747	0	0.002428956	0	0.004857911	0.004857911	0	0	3.90956E-08	8.63476E-07	0	9.02571E-07	0.9025713
3975253768239	397525	3768239	0	0	0.002281286	0	0.001901071	0	0.003802143	0.003802143	0	0	3.05989E-08	6.75817E-07	0	7.06416E-07	0.7064157
3964253768289	396425	3768289	0	0	4.64779E-05	0	3.87315E-05	0	7.74631E-05	7.74631E-05	0	0	6.23409E-10	1.37688E-08	0	1.43922E-08	0.0143922
3964753768289	396475	3768289	0	0	5.06509E-05	0	4.22091E-05	0	8.44181E-05	8.44181E-05	0	0	6.79381E-10	1.5005E-08	0	1.56844E-08	0.0156844
3973253768289	397325	3768289	0	0	0.0013753	0	0.001146083	0	0.002292167	0.002292167	0	0	1.84469E-08	4.07424E-07	0	4.25871E-07	0.4258711
3973753768289	397375	3768289	0	0	0.001824936	0	0.00152078	0	0.00304156	0.00304156	0	0	2.44779E-08	5.40626E-07	0	5.65104E-07	0.565104
3974253768289	397425	3768289	0	0	0.002155422	0	0.001796185	0	0.00359237	0.00359237	0	0	2.89107E-08	6.3853E-07	0	6.67441E-07	0.6674411
3974753768289	397475	3768289	0	0	0.002126687	0	0.001772239	0	0.003544478	0.003544478	0	0	2.85253E-08	6.30018E-07	0	6.58543E-07	0.6585432
3975253768289	397525	3768289	0	0	0.001788211	0	0.001490175	0	0.002980351	0.002980351	0	0	2.39853E-08	5.29746E-07	0	5.53732E-07	0.5537316
3964253768339	396425	3768339	0	0	4.56387E-05	0	3.80323E-05	0	7.60645E-05	7.60645E-05	0	0	6.12153E-10	1.35202E-08	0	1.41323E-08	0.0141323
3964753768339	396475	3768339	0	0	4.96076E-05	0	4.13397E-05	0	8.26794E-05	8.26794E-05	0	0	6.65388E-10	1.4696E-08	0	1.53613E-08	0.0153613
3965253768339	396525	3768339	0	0	5.44988E-05	0	4.54157E-05	0	9.08314E-05	9.08314E-05	0	0	7.30994E-10	1.61449E-08	0	1.68759E-08	0.0168759
3972753768339	397275	3768339	0	0	0.000746246	0	0.000621872	0	0.001243744	0.001243744	0	0	1.00094E-08	2.21071E-07	0	2.3108E-07	0.2310803
3973253768339	397325	3768339	0	0	0.000977176	0	0.000814314	0	0.001628627	0.001628627	0	0	1.31069E-08	2.89483E-07	0	3.02589E-07	0.3025894
3973753768339	397375	3768339	0	0	0.001219454	0	0.001016212	0	0.002032423	0.002032423	0	0	1.63566E-08	3.61256E-07	0	3.77612E-07	0.3776123
3974253768339	397425	3768339	0	0	0.001406862	0	0.001172385	0	0.002344771	0.002344771	0	0	1.88703E-08	4.16774E-07	0	4.35645E-07	0.4356445
3974753768339	397475	3768339	0	0	0.001446385	0	0.001205321	0	0.002410642	0.002410642	0	0	1.94004E-08	4.28483E-07	0	4.47883E-07	0.4478831
3975253768339	397525	3768339	0	0	0.001334545	0	0.001112121	0	0.002224242	0.002224242	0	0	1.79003E-08	3.95351E-07	0	4.13251E-07	0.413251
3964253768389	396425	3768389	0	0	4.45728E-05	0	3.7144E-05	0	7.4288E-05	7.4288E-05	0	0	5.97856E-10	1.32044E-08	0	1.38023E-08	0.0138023
3964753768389	396475	3768389	0	0	4.84056E-05	0	4.0338E-05	0	8.0676E-05	8.0676E-05	0	0	6.49266E-10	1.43399E-08	0	1.49891E-08	0.0149891
3965253768389	396525	3768389	0	0	5.3002E-05	0	4.41683E-05	0	8.83367E-05	8.83367E-05	0	0	7.10917E-10	1.57015E-08	0	1.64124E-08	0.0164124
3972253768389	397225	3768389	0	0	0.000459645	0	0.000383038	0	0.000766076	0.000766076	0	0	6.16523E-09	1.36167E-07	0	1.42332E-07	0.1423324

Garvey Reservoir Rehab - Unmitigated Proposed Pump Station - 3rd Trimester S			Demolition - 2025	Demolition - 2026	Site Preparation - 203	Site Preparation - 202	Grading - 2034	Grading - 2026	Infrastructure - 203	Infrastructure - 203	Paving - 2025	Architectural Coating - 2	Child Risk				
Unique Identifier	X (UTM)	Y (UTM)	1900	1900	2034	1900	2034	1900	2034	2035	1900	1900	3rd Trimester	0<2	2<16	Total	per million
3972753768389	397275	3768389	0	0	0.000580784	0	0.000483987	0	0.000967974	0.000967974	0	0	7.79007E-09	1.72054E-07	0	1.79844E-07	0.1798438
3973253768389	397325	3768389	0	0	0.000725532	0	0.00060461	0	0.001209221	0.001209221	0	0	9.73158E-09	2.14934E-07	0	2.24666E-07	0.2246661
3973753768389	397375	3768389	0	0	0.000870847	0	0.000725706	0	0.001451412	0.001451412	0	0	1.16807E-08	2.57983E-07	0	2.69664E-07	0.2696639
3974253768389	397425	3768389	0	0	0.000980359	0	0.000816966	0	0.001633932	0.001633932	0	0	1.31496E-08	2.90425E-07	0	3.03575E-07	0.3035749
3974753768389	397475	3768389	0	0	0.001019224	0	0.000849354	0	0.001698707	0.001698707	0	0	1.36709E-08	3.01939E-07	0	3.1561E-07	0.3156098
3975253768389	397525	3768389	0	0	0.000973941	0	0.000811617	0	0.001623235	0.001623235	0	0	1.30635E-08	2.88524E-07	0	3.01587E-07	0.3015875
3964253768439	396425	3768439	0	0	4.36051E-05	0	3.63376E-05	0	7.26752E-05	7.26752E-05	0	0	5.84876E-10	1.29177E-08	0	1.35026E-08	0.0135026
3964753768439	396475	3768439	0	0	4.71204E-05	0	3.9267E-05	0	7.85341E-05	7.85341E-05	0	0	6.32028E-10	1.39591E-08	0	1.45912E-08	0.0145912
3965253768439	396525	3768439	0	0	5.13917E-05	0	4.28265E-05	0	8.56529E-05	8.56529E-05	0	0	6.89319E-10	1.52245E-08	0	1.59138E-08	0.0159138
3971753768439	397175	3768439	0	0	0.000301456	0	0.000251213	0	0.000502427	0.000502427	0	0	4.04344E-09	8.93045E-08	0	9.33479E-08	0.0933479
3972253768439	397225	3768439	0	0	0.000377893	0	0.000314911	0	0.000629822	0.000629822	0	0	5.06869E-09	1.11949E-07	0	1.17017E-07	0.1170173
3972753768439	397275	3768439	0	0	0.000461475	0	0.000384562	0	0.000769125	0.000769125	0	0	6.18977E-09	1.36709E-07	0	1.42899E-07	0.1428989
3973253768439	397325	3768439	0	0	0.000558558	0	0.000465465	0	0.00093093	0.00093093	0	0	7.49196E-09	1.65469E-07	0	1.72961E-07	0.1729614
3973753768439	397375	3768439	0	0	0.000655165	0	0.000545971	0	0.001091942	0.001091942	0	0	8.78775E-09	1.94089E-07	0	2.02876E-07	0.2028765
3974253768439	397425	3768439	0	0	0.000731799	0	0.000609833	0	0.001219666	0.001219666	0	0	9.81564E-09	2.16791E-07	0	2.26607E-07	0.2266067
3974753768439	397475	3768439	0	0	0.000760217	0	0.000633514	0	0.001267028	0.001267028	0	0	1.01968E-08	2.2521E-07	0	2.35406E-07	0.2354063
3975253768439	397525	3768439	0	0	0.000742028	0	0.000618357	0	0.001236713	0.001236713	0	0	9.95284E-09	2.19821E-07	0	2.29774E-07	0.229774
3964253768489	396425	3768489	0	0	4.23653E-05	0	3.53044E-05	0	7.06088E-05	7.06088E-05	0	0	5.68247E-10	1.25505E-08	0	1.31187E-08	0.0131187
3964753768489	396475	3768489	0	0	4.57068E-05	0	3.8089E-05	0	7.61779E-05	7.61779E-05	0	0	6.13066E-10	1.35403E-08	0	1.41534E-08	0.0141534
3965253768489	396525	3768489	0	0	4.97361E-05	0	4.14468E-05	0	8.28936E-05	8.28936E-05	0	0	6.67112E-10	1.4734E-08	0	1.54011E-08	0.0154011
3970753768489	397075	3768489	0	0	0.000180446	0	0.000150371	0	0.000300743	0.000300743	0	0	2.42032E-09	5.34559E-08	0	5.58762E-08	0.0558762
3971253768489	397125	3768489	0	0	0.000213081	0	0.000177568	0	0.000355136	0.000355136	0	0	2.85807E-09	6.31241E-08	0	6.59821E-08	0.0659821
3971753768489	397175	3768489	0	0	0.000255915	0	0.000213263	0	0.000426526	0.000426526	0	0	3.4326E-09	7.58134E-08	0	7.9246E-08	0.079246
3972253768489	397225	3768489	0	0	0.000310724	0	0.000258937	0	0.000517874	0.000517874	0	0	4.16775E-09	9.20501E-08	0	9.62179E-08	0.0962179
3972753768489	397275	3768489	0	0	0.000374401	0	0.000312001	0	0.000624001	0.000624001	0	0	5.02185E-09	1.10914E-07	0	1.15936E-07	0.1159358
3973253768489	397325	3768489	0	0	0.000440995	0	0.000367496	0	0.000734992	0.000734992	0	0	5.91508E-09	1.30642E-07	0	1.36557E-07	0.1365572
3973753768489	397375	3768489	0	0	0.000506002	0	0.000421669	0	0.000843337	0.000843337	0	0	6.78702E-09	1.499E-07	0	1.56687E-07	0.1566871
3974253768489	397425	3768489	0	0	0.000558634	0	0.000465528	0	0.000931056	0.000931056	0	0	7.49297E-09	1.65492E-07	0	1.72985E-07	0.1729848
3974753768489	397475	3768489	0	0	0.000588382	0	0.000490318	0	0.000980636	0.000980636	0	0	7.89198E-09	1.74304E-07	0	1.82196E-07	0.1821965
3975253768489	397525	3768489	0	0	0.000586688	0	0.000488907	0	0.000977814	0.000977814	0	0	7.86927E-09	1.73803E-07	0	1.81672E-07	0.1816721
3964253768539	396425	3768539	0	0	4.10877E-05	0	3.42397E-05	0	6.84795E-05	6.84795E-05	0	0	5.5111E-10	1.2172E-08	0	1.27231E-08	0.0127231
3964753768539	396475	3768539	0	0	4.42779E-05	0	3.68983E-05	0	7.37966E-05	7.37966E-05	0	0	5.93901E-10	1.31171E-08	0	1.3711E-08	0.013711
3965253768539	396525	3768539	0	0	4.79823E-05	0	3.99852E-05	0	7.99704E-05	7.99704E-05	0	0	6.43587E-10	1.42144E-08	0	1.4858E-08	0.014858
3965753768539	396575	3768539	0	0	5.24048E-05	0	4.36706E-05	0	8.73413E-05	8.73413E-05	0	0	7.02906E-10	1.55246E-08	0	1.62275E-08	0.0162275
3970253768539	397025	3768539	0	0	0.000139585	0	0.000116321	0	0.000232641	0.000232641	0	0	1.87225E-09	4.13511E-08	0	4.32234E-08	0.0432234
3970753768539	397075	3768539	0	0	0.000161395	0	0.000134496	0	0.000268991	0.000268991	0	0	2.16479E-09	4.78122E-08	0	4.9977E-08	0.049977
3971253768539	397125	3768539	0	0	0.000187643	0	0.000156369	0	0.000312738	0.000312738	0	0	2.51685E-09	5.5588E-08	0	5.81048E-08	0.0581048
3971753768539	397175	3768539	0	0	0.000220966	0	0.000184139	0	0.000368277	0.000368277	0	0	2.96383E-09	6.54599E-08	0	6.84237E-08	0.0684237
3972253768539	397225	3768539	0	0	0.00026027	0	0.000216892	0	0.000433783	0.000433783	0	0	3.49101E-09	7.71034E-08	0	8.05944E-08	0.0805944
3972753768539	397275	3768539	0	0	0.000309159	0	0.000257633	0	0.000515266	0.000515266	0	0	4.14676E-09	9.15866E-08	0	9.57333E-08	0.0957333
3973253768539	397325	3768539	0	0	0.00035656	0	0.000297133	0	0.000594266	0.000594266	0	0	4.78254E-09	1.05629E-07	0	1.10411E-07	0.1104111
3973753768539	397375	3768539	0	0	0.000402357	0	0.000335298	0	0.000670595	0.000670595	0	0	5.39682E-09	1.19196E-07	0	1.24593E-07	0.1245926
3974253768539	397425	3768539	0	0	0.000439491	0	0.000366242	0	0.000732485	0.000732485	0	0	5.8949E-09	1.30196E-07	0	1.36091E-07	0.1360914
3974753768539	397475	3768539	0	0	0.000463463	0	0.000386219	0	0.000772439	0.000772439	0	0	6.21644E-09	1.37298E-07	0	1.43515E-07	0.1435145
3975253768539	397525	3768539	0	0	0.000468294	0	0.000390245	0	0.00078049	0.00078049	0	0	6.28124E-09	1.38729E-07	0	1.4501E-07	0.1450104
3964253768589	396425	3768589	0	0	3.98328E-05	0	3.3194E-05	0	6.63879E-05	6.63879E-05	0	0	5.34278E-10	1.18002E-08	0	1.23345E-08	0.0123345
3964753768589	396475	3768589	0	0	4.27962E-05	0	3.56635E-05	0	7.1327E-05	7.1327E-05	0	0	5.74027E-10	1.26781E-08	0	1.32521E-08	0.0132521
3965253768589	396525	3768589	0	0	4.63191E-05	0	3.85992E-05	0	7.71985E-05	7.71985E-05	0	0	6.21279E-10	1.37217E-08	0	1.4343E-08	0.014343
3965753768589	396575	3768589	0	0	5.02502E-05	0	4.18752E-05	0	8.37504E-05	8.37504E-05	0	0	6.74007E-10	1.48863E-08	0	1.55603E-08	0.0155603
3966253768589	396625	3768589	0	0	5.47105E-05	0	4.55921E-05	0	9.11842E-05	9.11842E-05	0	0	7.33833E-10	1.62077E-08	0	1.69415E-08	0.0169415
3968253768589	396825	3768589	0	0	8.00813E-05	0	6.67344E-05	0	0.000133469	0.000133469	0	0	1.07413E-09	2.37236E-08	0	2.47977E-08	0.0247977
3968753768589	396875	3768589	0	0	8.92892E-05	0	7.44077E-05	0	0.000148815	0.000148815	0	0	1.19764E-09	2.64514E-08	0	2.7649E-08	0.027649
3969253768589	396925	3768589	0	0	9.94723E-05	0	8.28936E-05	0	0.000165787	0.000165787	0	0	1.33422E-09	2.94681E-08	0	3.08023E-08	0.0308023
3969753768589	396975	3768589	0	0	0.000112687	0	9.39057E-05	0	0.000187811	0.000187811	0	0	1.51147E-09	3.33828E-08	0	3.48943E-08	0.0348943
3970253768589	397025	3768589	0	0	0.000127927	0	0.000106606	0	0.000213212	0.000213212	0	0	1.71589E-09	3.78977E-08	0	3.96136E-08	0.0396136
3970753768589	397075	3768589	0	0	0.000145081	0	0.000120901	0	0.000241801	0.000241801	0	0	1.94597E-09	4.29793E-08	0	4.49253E-08	0.0449253
3971253768589	397125	3768589	0	0	0.000167276	0	0.000139397	0	0.000278794	0.000278794	0	0	2.24368E-09	4.95546E-08	0	5.17983E-08	0.0517983
3971753768589	397175	3768589	0	0	0.000192912	0	0.00016076	0	0.00032152	0.00032152	0	0	2.58753E-09	5.71489E-08	0	5.97365E-08	0.0597365
3972253768589	397225	3768589	0	0	0.000221821	0	0.000184851	0	0.000369701	0.000369701	0	0	2.97529E-09	6.5713E-08	0	6.86883E-08	0.0686883
3972753768589	397275	3768589	0	0	0.000254638	0	0.000212198	0	0.000424396	0.000424396	0	0	3.41546E-09	7.54349E-08	0	7.88504E-08	0.0788504
3973253768589	397325	3768589	0	0	0.000293722	0	0.000244769	0	0.000489537	0.000489537	0	0	3.9397E-09	8.70134E-08	0	9.09531E-08	0.0909531
3973753768589	397375	3768589	0	0	0.000327114	0	0.000272595	0	0.00054519	0.00054519	0	0	4.38759E-09	9.69055E-08	0	1.01293E-07	0.1012931
3974253768589	397425	3768589	0	0	0.000354586	0	0.000295489	0	0.000590977	0.000590977	0	0	4.75608E-09	1.05044E-07	0	1.098E-07	0.1098001
3974753768589	397475	3768589	0	0	0.000373562	0	0.000311301	0	0.000622603	0.000622603	0	0	5.01059E-09	1.10665E-07	0	1.15676E-07	0.1156759
3975253768589	397525	3768589	0	0	0.000380131	0	0.000316776	0	0.000633552	0.000633552	0	0	5.09871E-09	1.12611E-07	0	1.1771E-07	0.1177102
3964253768639	396425	3768639	0	0	3.854E-05	0	3.21167E-05	0	6.42334E-05	6.42334E-05	0	0	5.16938E-10	1.14172E-08	0	1.19342E-08	0.0119342
3964753768639	396475	3768639	0	0	4.12465E-05	0	3.4372E-05	0	6.87441E-05	6.87441E-05	0	0	5.5324E-10	1.2219E-08	0	1.27722E-08	0.0127722
3965253768639	396525	3768639	0	0	4.45425E-05	0	3.71188E-05	0	7.42376E-05	7.42376E-05	0	0	5.9745E-10	1.31955E-08	0	1.37929E-08	0.0137929
3965753768639	396575	3768639	0	0	4.81259E-05	0	4.01049E-05	0	8.02098E-05	8.02098E-05	0	0	6.45514E-10	1.4257E-08	0	1.49025E-08	0.0149025
3966253768639	396625	3768639	0	0	5.2178E-05	0	4.34816E-05	0	8.69633E-05	8.69633E-05	0	0	6.99864E-10	1.54574E-08	0	1.61573E-08	0.0161573
3966753768639	396675	3768639	0	0	5.67895E-05	0	4.73246E-05	0	9.46491E-05	9.46491E-05	0	0	7.61718E-10	1.68235E-08	0	1.75852E-08	0.0175852
3967253768639	396725	3768639	0	0	6.20662E-05	0	5.17219E-05	0	0.000103444	0.000103444	0	0	8.32496E-10	1.83867E-08	0	1.92192E-08	0.0192192
3967753768639	396775	3768639	0	0	6.80536E-05	0	5.67113E-05	0	0.000113423	0.000113423	0	0	9.12805E-10	2.01605E-08	0	2.10733E-08	0.0210733
3968253768639	396825	3768639	0	0	7.50389E-05	0	6.25324E-05	0	0.000125065	0.000125065	0	0	1.0065E-09	2.22298E-08	0	2.32363E-08	0.0232363
3968753768639	396875	3768639	0	0	8.29843E-05	0	6.91536E-05	0	0.000138307	0.000138307	0	0	1.11307E-09	2.45836E-08	0	2.56967E-08	0.0256967
3969253768639	396925	3768639	0	0	9.21695E-05	0	7.68079E-05	0	0.000153616	0.000153616	0	0	1.23627E-09	2.73046E-08	0	2.85409E-08	0.0285409
3969753768639	396975	3768639	0	0	0.000103343	0	8.61191E-05	0	0.000172238	0.000172238	0	0	1.38614E-09	3.06147E-08	0	3.20008E-08	0.0320008

Garvey Reservoir Rehab - Unmitigated Proposed Pump Station - 3rd Trimester S			Demolition - 2025	Demolition - 2026	Site Preparation - 203	Site Preparation - 202	Grading - 2034	Grading - 2026	Infrastructure - 203	Infrastructure - 203	Paving - 2025	Architectural Coating - 2	Child Risk				
Unique Identifier	X (UTM)	Y (UTM)	1900	1900	2034	1900	2034	1900	2034	2035	1900	1900	3rd Trimester	0<2	2<16	Total	per million
3970253768639	397025	3768639	0	0	0.000116096	0	9.6747E-05	0	0.000193494	0.000193494	0	0	1.5572E-09	3.43928E-08	0	3.595E-08	0.03595
3970753768639	397075	3768639	0	0	0.000130195	0	0.000108496	0	0.000216992	0.000216992	0	0	1.74631E-09	3.85696E-08	0	4.03159E-08	0.0403159
3971253768639	397125	3768639	0	0	0.000145459	0	0.000121216	0	0.000242431	0.000242431	0	0	1.95104E-09	4.30913E-08	0	4.50423E-08	0.0450423
3971753768639	397175	3768639	0	0	0.000167866	0	0.000139888	0	0.000279777	0.000279777	0	0	2.25159E-09	4.97293E-08	0	5.19809E-08	0.0519809
3972253768639	397225	3768639	0	0	0.000190999	0	0.000159166	0	0.000318332	0.000318332	0	0	2.56188E-09	5.65823E-08	0	5.91442E-08	0.0591442
3972753768639	397275	3768639	0	0	0.000217081	0	0.000180901	0	0.000361801	0.000361801	0	0	2.91171E-09	6.43088E-08	0	6.72205E-08	0.0672205
3973253768639	397325	3768639	0	0	0.000245241	0	0.000204367	0	0.000408735	0.000408735	0	0	3.28942E-09	7.26511E-08	0	7.59406E-08	0.0759406
3973753768639	397375	3768639	0	0	0.000270325	0	0.00022527	0	0.000450541	0.000450541	0	0	3.62587E-09	8.0082E-08	0	8.37078E-08	0.0837078
3974253768639	397425	3768639	0	0	0.000292634	0	0.000243861	0	0.000487723	0.000487723	0	0	3.9251E-09	8.66909E-08	0	9.0616E-08	0.090616
3974753768639	397475	3768639	0	0	0.000307088	0	0.000255907	0	0.000511813	0.000511813	0	0	4.11898E-09	9.09729E-08	0	9.50919E-08	0.0950919
3975253768639	397525	3768639	0	0	0.000314073	0	0.000261728	0	0.000523455	0.000523455	0	0	4.21267E-09	9.30423E-08	0	9.72549E-08	0.0972549
3964253768689	396425	3768689	0	0	3.70507E-05	0	3.08756E-05	0	6.17512E-05	6.17512E-05	0	0	4.96962E-10	1.09761E-08	0	1.1473E-08	0.011473
3964753768689	396475	3768689	0	0	3.97042E-05	0	3.30869E-05	0	6.61737E-05	6.61737E-05	0	0	5.32554E-10	1.17621E-08	0	1.22947E-08	0.0122947
3965253768689	396525	3768689	0	0	4.26072E-05	0	3.5506E-05	0	7.1012E-05	7.1012E-05	0	0	5.71492E-10	1.26221E-08	0	1.31936E-08	0.0131936
3965753768689	396575	3768689	0	0	4.59638E-05	0	3.83032E-05	0	7.66063E-05	7.66063E-05	0	0	6.16513E-10	1.36165E-08	0	1.4233E-08	0.014233
3966253768689	396625	3768689	0	0	4.95925E-05	0	4.13271E-05	0	8.26542E-05	8.26542E-05	0	0	6.65185E-10	1.46915E-08	0	1.53567E-08	0.0153567
3966753768689	396675	3768689	0	0	5.37731E-05	0	4.48109E-05	0	8.96218E-05	8.96218E-05	0	0	7.2126E-10	1.59299E-08	0	1.66512E-08	0.0166512
3967253768689	396725	3768689	0	0	5.8377E-05	0	4.86475E-05	0	9.72951E-05	9.72951E-05	0	0	7.83012E-10	1.72938E-08	0	1.80768E-08	0.0180768
3967753768689	396775	3768689	0	0	6.3684E-05	0	5.307E-05	0	0.00010614	0.00010614	0	0	8.54195E-10	1.8866E-08	0	1.97202E-08	0.0197202
3968253768689	396825	3768689	0	0	6.97773E-05	0	5.81477E-05	0	0.000116295	0.000116295	0	0	9.35924E-10	2.06711E-08	0	2.1607E-08	0.021607
3968753768689	396875	3768689	0	0	7.69213E-05	0	6.41011E-05	0	0.000128202	0.000128202	0	0	1.03175E-09	2.27875E-08	0	2.38192E-08	0.0238192
3969253768689	396925	3768689	0	0	8.49725E-05	0	7.08104E-05	0	0.000141621	0.000141621	0	0	1.13974E-09	2.51726E-08	0	2.63123E-08	0.0263123
3969753768689	396975	3768689	0	0	9.43089E-05	0	7.85908E-05	0	0.000157182	0.000157182	0	0	1.26497E-09	2.79384E-08	0	2.92034E-08	0.0292034
3970253768689	397025	3768689	0	0	0.000105165	0	8.76374E-05	0	0.000175275	0.000175275	0	0	1.41058E-09	3.11544E-08	0	3.2565E-08	0.032565
3970753768689	397075	3768689	0	0	0.000117828	0	9.81896E-05	0	0.000196379	0.000196379	0	0	1.58042E-09	3.49057E-08	0	3.64861E-08	0.0364861
3971253768689	397125	3768689	0	0	0.000129817	0	0.000108181	0	0.000216362	0.000216362	0	0	1.74124E-09	3.84576E-08	0	4.01989E-08	0.0401989
3971753768689	397175	3768689	0	0	0.000147417	0	0.000122847	0	0.000245695	0.000245695	0	0	1.9773E-09	4.36713E-08	0	4.56486E-08	0.0456486
3972253768689	397225	3768689	0	0	0.000166588	0	0.000138824	0	0.000277647	0.000277647	0	0	2.23446E-09	4.93508E-08	0	5.15853E-08	0.0515853
3972753768689	397275	3768689	0	0	0.000186494	0	0.000155411	0	0.000310823	0.000310823	0	0	2.50144E-09	5.52476E-08	0	5.7749E-08	0.057749
3973253768689	397325	3768689	0	0	0.000207601	0	0.000173	0	0.000346001	0.000346001	0	0	2.78455E-09	6.15004E-08	0	6.42849E-08	0.0642849
3973753768689	397375	3768689	0	0	0.000227831	0	0.000189859	0	0.000379718	0.000379718	0	0	3.0559E-09	6.74934E-08	0	7.05493E-08	0.0705493
3974253768689	397425	3768689	0	0	0.000244923	0	0.000204103	0	0.000408206	0.000408206	0	0	3.28516E-09	7.25571E-08	0	7.58422E-08	0.0758422
3974753768689	397475	3768689	0	0	0.000257609	0	0.000214674	0	0.000429348	0.000429348	0	0	3.45531E-09	7.6315E-08	0	7.97704E-08	0.0797704
3975253768689	397525	3768689	0	0	0.000264292	0	0.000220243	0	0.000440486	0.000440486	0	0	3.54495E-09	7.82948E-08	0	8.18398E-08	0.0818398

Garvey Reservoir Rehab - Unmitigated Proposed Pump Station - 3rd Trimester Start

Offroad DPM Emissions, Ground Level Concentrations and Health Risk Calculations

Residential Receptors

Phase	Year	Emissions (lbs/day)	Meters	lbs/meter	meters (h1)	lbs/day (H1)	g/s (H1)	meters (h2)	lbs/day (H2)	g/s (H2)	hrs/day
Demolition - 2025	1900		1932.1	0	691.2	0	0	1240.9	0	0	10.00
Demolition - 2026	1900		1932.1	0	691.2	0	0	1240.9	0	0	10.00
Site Preparation - 2034	2034	0.0000	1932.1	0	691.2	0	0	1240.9	0	0	10.00
Site Preparation - 2026	1900		1932.1	0	691.2	0	0	1240.9	0	0	10.00
Grading - 2034	2034	0.0000	1932.1	0	691.2	0	0	1240.9	0	0	10.00
Grading - 2026	1900		1932.1	0	691.2	0	0	1240.9	0	0	10.00
Infrastructure - 2034	2034	0.0000	1932.1	0	691.2	0	0	1240.9	0	0	10.00
Infrastructure - 2035	2035	0.0000	1932.1	0	691.2	0	0	1240.9	0	0	10.00
Paving - 2025	1900		1932.1	0	691.2	0	0	1240.9	0	0	10.00
Architectural Coating - 2026	1900		1932.1	0	691.2	0	0	1240.9	0	0	10.00

		AERMOD Column Identifier:	*5*	*5*	*5*	*5*	*5*	*5*	*5*	*5*	*5*	*5*						
			6	*6*	*6*	*6*	*6*	*6*	*6*	*6*	*6*	*6*					*MAX:*	0
Garvey Reservoir Rehab - Unmitigated Proposed Pump Station - 3rd Trimester S			Demolition - 2025	Demolition - 2026	Site Preparation - 2034	te Preparation - 20	Grading - 2034	Grading - 2026	Infrastructure - 2034	nfrastructure - 203	Paving - 2025	rchitectural Coating - 202	Child Risk					
Unique Identifier	X (UTM)	Y (UTM)	1900	1900	2034	1900	2034	1900	2034	2035	1900	1900	3rd Trimester	0<2	2<16	Total	per million	
396166.283767377.2	396166.28	3767377	0	0	0	0	0	0	0	0	0	0	0	0	0	0	0	
396266.283767377.2	396266.28	3767377	0	0	0	0	0	0	0	0	0	0	0	0	0	0	0	
396366.283767377.2	396366.28	3767377	0	0	0	0	0	0	0	0	0	0	0	0	0	0	0	
396466.283767377.2	396466.28	3767377	0	0	0	0	0	0	0	0	0	0	0	0	0	0	0	
396566.283767377.2	396566.28	3767377	0	0	0	0	0	0	0	0	0	0	0	0	0	0	0	
396666.283767377.2	396666.28	3767377	0	0	0	0	0	0	0	0	0	0	0	0	0	0	0	
396766.283767377.2	396766.28	3767377	0	0	0	0	0	0	0	0	0	0	0	0	0	0	0	
396866.283767377.2	396866.28	3767377	0	0	0	0	0	0	0	0	0	0	0	0	0	0	0	
396966.283767377.2	396966.28	3767377	0	0	0	0	0	0	0	0	0	0	0	0	0	0	0	
397066.283767377.2	397066.28	3767377	0	0	0	0	0	0	0	0	0	0	0	0	0	0	0	
397166.283767377.2	397166.28	3767377	0	0	0	0	0	0	0	0	0	0	0	0	0	0	0	
397266.283767377.2	397266.28	3767377	0	0	0	0	0	0	0	0	0	0	0	0	0	0	0	
397366.283767377.2	397366.28	3767377	0	0	0	0	0	0	0	0	0	0	0	0	0	0	0	
397466.283767377.2	397466.28	3767377	0	0	0	0	0	0	0	0	0	0	0	0	0	0	0	
397566.283767377.2	397566.28	3767377	0	0	0	0	0	0	0	0	0	0	0	0	0	0	0	
397666.283767377.2	397666.28	3767377	0	0	0	0	0	0	0	0	0	0	0	0	0	0	0	
397766.283767377.2	397766.28	3767377	0	0	0	0	0	0	0	0	0	0	0	0	0	0	0	
397866.283767377.2	397866.28	3767377	0	0	0	0	0	0	0	0	0	0	0	0	0	0	0	
396166.283767477.2	396166.28	3767477	0	0	0	0	0	0	0	0	0	0	0	0	0	0	0	
396266.283767477.2	396266.28	3767477	0	0	0	0	0	0	0	0	0	0	0	0	0	0	0	
396366.283767477.2	396366.28	3767477	0	0	0	0	0	0	0	0	0	0	0	0	0	0	0	
396466.283767477.2	396466.28	3767477	0	0	0	0	0	0	0	0	0	0	0	0	0	0	0	
396566.283767477.2	396566.28	3767477	0	0	0	0	0	0	0	0	0	0	0	0	0	0	0	
396666.283767477.2	396666.28	3767477	0	0	0	0	0	0	0	0	0	0	0	0	0	0	0	
396766.283767477.2	396766.28	3767477	0	0	0	0	0	0	0	0	0	0	0	0	0	0	0	
396866.283767477.2	396866.28	3767477	0	0	0	0	0	0	0	0	0	0	0	0	0	0	0	
396966.283767477.2	396966.28	3767477	0	0	0	0	0	0	0	0	0	0	0	0	0	0	0	
397066.283767477.2	397066.28	3767477	0	0	0	0	0	0	0	0	0	0	0	0	0	0	0	
397166.283767477.2	397166.28	3767477	0	0	0	0	0	0	0	0	0	0	0	0	0	0	0	
397266.283767477.2	397266.28	3767477	0	0	0	0	0	0	0	0	0	0	0	0	0	0	0	
397366.283767477.2	397366.28	3767477	0	0	0	0	0	0	0	0	0	0	0	0	0	0	0	
397466.283767477.2	397466.28	3767477	0	0	0	0	0	0	0	0	0	0	0	0	0	0	0	
397566.283767477.2	397566.28	3767477	0	0	0	0	0	0	0	0	0	0	0	0	0	0	0	
397666.283767477.2	397666.28	3767477	0	0	0	0	0	0	0	0	0	0	0	0	0	0	0	
397766.283767477.2	397766.28	3767477	0	0	0	0	0	0	0	0	0	0	0	0	0	0	0	
397866.283767477.2	397866.28	3767477	0	0	0	0	0	0	0	0	0	0	0	0	0	0	0	
396166.283767577.2	396166.28	3767577	0	0	0	0	0	0	0	0	0	0	0	0	0	0	0	
396266.283767577.2	396266.28	3767577	0	0	0	0	0	0	0	0	0	0	0	0	0	0	0	
396366.283767577.2	396366.28	3767577	0	0	0	0	0	0	0	0	0	0	0	0	0	0	0	
396466.283767577.2	396466.28	3767577	0	0	0	0	0	0	0	0	0	0	0	0	0	0	0	
396566.283767577.2	396566.28	3767577	0	0	0	0	0	0	0	0	0	0	0	0	0	0	0	
396666.283767577.2	396666.28	3767577	0	0	0	0	0	0	0	0	0	0	0	0	0	0	0	
396766.283767577.2	396766.28	3767577	0	0	0	0	0	0	0	0	0	0	0	0	0	0	0	
396866.283767577.2	396866.28	3767577	0	0	0	0	0	0	0	0	0	0	0	0	0	0	0	
396966.283767577.2	396966.28	3767577	0	0	0	0	0	0	0	0	0	0	0	0	0	0	0	
397066.283767577.2	397066.28	3767577	0	0	0	0	0	0	0	0	0	0	0	0	0	0	0	
397166.283767577.2	397166.28	3767577	0	0	0	0	0	0	0	0	0	0	0	0	0	0	0	
397266.283767577.2	397266.28	3767577	0	0	0	0	0	0	0	0	0	0	0	0	0	0	0	

Garvey Reservoir Rehab - Unmitigated Proposed Pump Station - 3rd Trimester S			Demolition - 2025	Demolition - 2026	Site Preparation - 2034	te Preparation - 20	Grading - 2034	Grading - 2026	Infrastructure - 2034	nfrastructure - 203	Paving - 2025	rchitectural Coating - 202	Child Risk				
Unique Identifier	X (UTM)	Y (UTM)	1900	1900	2034	1900	2034	1900	2034	2035	1900	1900	3rd Trimester	0<2	2<16	Total	per million
397366.283767577.2	397366.28	3767577	0	0	0	0	0	0	0	0	0	0	0	0	0	0	0
397466.283767577.2	397466.28	3767577	0	0	0	0	0	0	0	0	0	0	0	0	0	0	0
397566.283767577.2	397566.28	3767577	0	0	0	0	0	0	0	0	0	0	0	0	0	0	0
397666.283767577.2	397666.28	3767577	0	0	0	0	0	0	0	0	0	0	0	0	0	0	0
397766.283767577.2	397766.28	3767577	0	0	0	0	0	0	0	0	0	0	0	0	0	0	0
397866.283767577.2	397866.28	3767577	0	0	0	0	0	0	0	0	0	0	0	0	0	0	0
396166.283767677.2	396166.28	3767677	0	0	0	0	0	0	0	0	0	0	0	0	0	0	0
396266.283767677.2	396266.28	3767677	0	0	0	0	0	0	0	0	0	0	0	0	0	0	0
396366.283767677.2	396366.28	3767677	0	0	0	0	0	0	0	0	0	0	0	0	0	0	0
396466.283767677.2	396466.28	3767677	0	0	0	0	0	0	0	0	0	0	0	0	0	0	0
396566.283767677.2	396566.28	3767677	0	0	0	0	0	0	0	0	0	0	0	0	0	0	0
396666.283767677.2	396666.28	3767677	0	0	0	0	0	0	0	0	0	0	0	0	0	0	0
396766.283767677.2	396766.28	3767677	0	0	0	0	0	0	0	0	0	0	0	0	0	0	0
396866.283767677.2	396866.28	3767677	0	0	0	0	0	0	0	0	0	0	0	0	0	0	0
396966.283767677.2	396966.28	3767677	0	0	0	0	0	0	0	0	0	0	0	0	0	0	0
397066.283767677.2	397066.28	3767677	0	0	0	0	0	0	0	0	0	0	0	0	0	0	0
397166.283767677.2	397166.28	3767677	0	0	0	0	0	0	0	0	0	0	0	0	0	0	0
397266.283767677.2	397266.28	3767677	0	0	0	0	0	0	0	0	0	0	0	0	0	0	0
397366.283767677.2	397366.28	3767677	0	0	0	0	0	0	0	0	0	0	0	0	0	0	0
397466.283767677.2	397466.28	3767677	0	0	0	0	0	0	0	0	0	0	0	0	0	0	0
397566.283767677.2	397566.28	3767677	0	0	0	0	0	0	0	0	0	0	0	0	0	0	0
397666.283767677.2	397666.28	3767677	0	0	0	0	0	0	0	0	0	0	0	0	0	0	0
397766.283767677.2	397766.28	3767677	0	0	0	0	0	0	0	0	0	0	0	0	0	0	0
397866.283767677.2	397866.28	3767677	0	0	0	0	0	0	0	0	0	0	0	0	0	0	0
396166.283767777.2	396166.28	3767777	0	0	0	0	0	0	0	0	0	0	0	0	0	0	0
396266.283767777.2	396266.28	3767777	0	0	0	0	0	0	0	0	0	0	0	0	0	0	0
396366.283767777.2	396366.28	3767777	0	0	0	0	0	0	0	0	0	0	0	0	0	0	0
396466.283767777.2	396466.28	3767777	0	0	0	0	0	0	0	0	0	0	0	0	0	0	0
396566.283767777.2	396566.28	3767777	0	0	0	0	0	0	0	0	0	0	0	0	0	0	0
396666.283767777.2	396666.28	3767777	0	0	0	0	0	0	0	0	0	0	0	0	0	0	0
396766.283767777.2	396766.28	3767777	0	0	0	0	0	0	0	0	0	0	0	0	0	0	0
396866.283767777.2	396866.28	3767777	0	0	0	0	0	0	0	0	0	0	0	0	0	0	0
396966.283767777.2	396966.28	3767777	0	0	0	0	0	0	0	0	0	0	0	0	0	0	0
397066.283767777.2	397066.28	3767777	0	0	0	0	0	0	0	0	0	0	0	0	0	0	0
397166.283767777.2	397166.28	3767777	0	0	0	0	0	0	0	0	0	0	0	0	0	0	0
397266.283767777.2	397266.28	3767777	0	0	0	0	0	0	0	0	0	0	0	0	0	0	0
397366.283767777.2	397366.28	3767777	0	0	0	0	0	0	0	0	0	0	0	0	0	0	0
397466.283767777.2	397466.28	3767777	0	0	0	0	0	0	0	0	0	0	0	0	0	0	0
397566.283767777.2	397566.28	3767777	0	0	0	0	0	0	0	0	0	0	0	0	0	0	0
397666.283767777.2	397666.28	3767777	0	0	0	0	0	0	0	0	0	0	0	0	0	0	0
397766.283767777.2	397766.28	3767777	0	0	0	0	0	0	0	0	0	0	0	0	0	0	0
397866.283767777.2	397866.28	3767777	0	0	0	0	0	0	0	0	0	0	0	0	0	0	0
396166.283767877.2	396166.28	3767877	0	0	0	0	0	0	0	0	0	0	0	0	0	0	0
396266.283767877.2	396266.28	3767877	0	0	0	0	0	0	0	0	0	0	0	0	0	0	0
396366.283767877.2	396366.28	3767877	0	0	0	0	0	0	0	0	0	0	0	0	0	0	0
396466.283767877.2	396466.28	3767877	0	0	0	0	0	0	0	0	0	0	0	0	0	0	0
396566.283767877.2	396566.28	3767877	0	0	0	0	0	0	0	0	0	0	0	0	0	0	0
397466.283767877.2	397466.28	3767877	0	0	0	0	0	0	0	0	0	0	0	0	0	0	0
397566.283767877.2	397566.28	3767877	0	0	0	0	0	0	0	0	0	0	0	0	0	0	0
397666.283767877.2	397666.28	3767877	0	0	0	0	0	0	0	0	0	0	0	0	0	0	0
397766.283767877.2	397766.28	3767877	0	0	0	0	0	0	0	0	0	0	0	0	0	0	0
397866.283767877.2	397866.28	3767877	0	0	0	0	0	0	0	0	0	0	0	0	0	0	0
396166.283767977.2	396166.28	3767977	0	0	0	0	0	0	0	0	0	0	0	0	0	0	0
396266.283767977.2	396266.28	3767977	0	0	0	0	0	0	0	0	0	0	0	0	0	0	0
396366.283767977.2	396366.28	3767977	0	0	0	0	0	0	0	0	0	0	0	0	0	0	0
396466.283767977.2	396466.28	3767977	0	0	0	0	0	0	0	0	0	0	0	0	0	0	0
397466.283767977.2	397466.28	3767977	0	0	0	0	0	0	0	0	0	0	0	0	0	0	0
397566.283767977.2	397566.28	3767977	0	0	0	0	0	0	0	0	0	0	0	0	0	0	0
397666.283767977.2	397666.28	3767977	0	0	0	0	0	0	0	0	0	0	0	0	0	0	0
397766.283767977.2	397766.28	3767977	0	0	0	0	0	0	0	0	0	0	0	0	0	0	0
397866.283767977.2	397866.28	3767977	0	0	0	0	0	0	0	0	0	0	0	0	0	0	0
396166.283768077.2	396166.28	3768077	0	0	0	0	0	0	0	0	0	0	0	0	0	0	0
396266.283768077.2	396266.28	3768077	0	0	0	0	0	0	0	0	0	0	0	0	0	0	0
396366.283768077.2	396366.28	3768077	0	0	0	0	0	0	0	0	0	0	0	0	0	0	0
396466.283768077.2	396466.28	3768077	0	0	0	0	0	0	0	0	0	0	0	0	0	0	0
397466.283768077.2	397466.28	3768077	0	0	0	0	0	0	0	0	0	0	0	0	0	0	0
397566.283768077.2	397566.28	3768077	0	0	0	0	0	0	0	0	0	0	0	0	0	0	0
397666.283768077.2	397666.28	3768077	0	0	0	0	0	0	0	0	0	0	0	0	0	0	0
397766.283768077.2	397766.28	3768077	0	0	0	0	0	0	0	0	0	0	0	0	0	0	0
397866.283768077.2	397866.28	3768077	0	0	0	0	0	0	0	0	0	0	0	0	0	0	0
396166.283768177.2	396166.28	3768177	0	0	0	0	0	0	0	0	0	0	0	0	0	0	0
396266.283768177.2	396266.28	3768177	0	0	0	0	0	0	0	0	0	0	0	0	0	0	0
396366.283768177.2	396366.28	3768177	0	0	0	0	0	0	0	0	0	0	0	0	0	0	0
396466.283768177.2	396466.28	3768177	0	0	0	0	0	0	0	0	0	0	0	0	0	0	0
397466.283768177.2	397466.28	3768177	0	0	0	0	0	0	0	0	0	0	0	0	0	0	0

Garvey Reservoir Rehab - Unmitigated Proposed Pump Station - 3rd Trimester S			Demolition - 2025	Demolition - 2026	Site Preparation - 2034	te Preparation - 20	Grading - 2034	Grading - 2026	Infrastructure - 2034	nfrastructure - 203	Paving - 2025	rchitectural Coating - 202	Child Risk				
Unique Identifier	X (UTM)	Y (UTM)	1900	1900	2034	1900	2034	1900	2034	2035	1900	1900	3rd Trimester	0<2	2<16	Total	per million
397566.283768177.2	397566.28	3768177	0	0	0	0	0	0	0	0	0	0	0	0	0	0	0
397666.283768177.2	397666.28	3768177	0	0	0	0	0	0	0	0	0	0	0	0	0	0	0
397766.283768177.2	397766.28	3768177	0	0	0	0	0	0	0	0	0	0	0	0	0	0	0
397866.283768177.2	397866.28	3768177	0	0	0	0	0	0	0	0	0	0	0	0	0	0	0
396166.283768277.2	396166.28	3768277	0	0	0	0	0	0	0	0	0	0	0	0	0	0	0
396266.283768277.2	396266.28	3768277	0	0	0	0	0	0	0	0	0	0	0	0	0	0	0
396366.283768277.2	396366.28	3768277	0	0	0	0	0	0	0	0	0	0	0	0	0	0	0
396466.283768277.2	396466.28	3768277	0	0	0	0	0	0	0	0	0	0	0	0	0	0	0
397366.283768277.2	397366.28	3768277	0	0	0	0	0	0	0	0	0	0	0	0	0	0	0
397466.283768277.2	397466.28	3768277	0	0	0	0	0	0	0	0	0	0	0	0	0	0	0
397566.283768277.2	397566.28	3768277	0	0	0	0	0	0	0	0	0	0	0	0	0	0	0
397666.283768277.2	397666.28	3768277	0	0	0	0	0	0	0	0	0	0	0	0	0	0	0
397766.283768277.2	397766.28	3768277	0	0	0	0	0	0	0	0	0	0	0	0	0	0	0
397866.283768277.2	397866.28	3768277	0	0	0	0	0	0	0	0	0	0	0	0	0	0	0
396166.283768377.2	396166.28	3768377	0	0	0	0	0	0	0	0	0	0	0	0	0	0	0
396266.283768377.2	396266.28	3768377	0	0	0	0	0	0	0	0	0	0	0	0	0	0	0
396366.283768377.2	396366.28	3768377	0	0	0	0	0	0	0	0	0	0	0	0	0	0	0
396466.283768377.2	396466.28	3768377	0	0	0	0	0	0	0	0	0	0	0	0	0	0	0
397266.283768377.2	397266.28	3768377	0	0	0	0	0	0	0	0	0	0	0	0	0	0	0
397366.283768377.2	397366.28	3768377	0	0	0	0	0	0	0	0	0	0	0	0	0	0	0
397466.283768377.2	397466.28	3768377	0	0	0	0	0	0	0	0	0	0	0	0	0	0	0
397566.283768377.2	397566.28	3768377	0	0	0	0	0	0	0	0	0	0	0	0	0	0	0
397666.283768377.2	397666.28	3768377	0	0	0	0	0	0	0	0	0	0	0	0	0	0	0
397766.283768377.2	397766.28	3768377	0	0	0	0	0	0	0	0	0	0	0	0	0	0	0
397866.283768377.2	397866.28	3768377	0	0	0	0	0	0	0	0	0	0	0	0	0	0	0
396166.283768477.2	396166.28	3768477	0	0	0	0	0	0	0	0	0	0	0	0	0	0	0
396266.283768477.2	396266.28	3768477	0	0	0	0	0	0	0	0	0	0	0	0	0	0	0
396366.283768477.2	396366.28	3768477	0	0	0	0	0	0	0	0	0	0	0	0	0	0	0
396466.283768477.2	396466.28	3768477	0	0	0	0	0	0	0	0	0	0	0	0	0	0	0
397166.283768477.2	397166.28	3768477	0	0	0	0	0	0	0	0	0	0	0	0	0	0	0
397266.283768477.2	397266.28	3768477	0	0	0	0	0	0	0	0	0	0	0	0	0	0	0
397366.283768477.2	397366.28	3768477	0	0	0	0	0	0	0	0	0	0	0	0	0	0	0
397466.283768477.2	397466.28	3768477	0	0	0	0	0	0	0	0	0	0	0	0	0	0	0
397566.283768477.2	397566.28	3768477	0	0	0	0	0	0	0	0	0	0	0	0	0	0	0
397666.283768477.2	397666.28	3768477	0	0	0	0	0	0	0	0	0	0	0	0	0	0	0
397766.283768477.2	397766.28	3768477	0	0	0	0	0	0	0	0	0	0	0	0	0	0	0
397866.283768477.2	397866.28	3768477	0	0	0	0	0	0	0	0	0	0	0	0	0	0	0
396166.283768577.2	396166.28	3768577	0	0	0	0	0	0	0	0	0	0	0	0	0	0	0
396266.283768577.2	396266.28	3768577	0	0	0	0	0	0	0	0	0	0	0	0	0	0	0
396366.283768577.2	396366.28	3768577	0	0	0	0	0	0	0	0	0	0	0	0	0	0	0
396466.283768577.2	396466.28	3768577	0	0	0	0	0	0	0	0	0	0	0	0	0	0	0
396566.283768577.2	396566.28	3768577	0	0	0	0	0	0	0	0	0	0	0	0	0	0	0
396866.283768577.2	396866.28	3768577	0	0	0	0	0	0	0	0	0	0	0	0	0	0	0
396966.283768577.2	396966.28	3768577	0	0	0	0	0	0	0	0	0	0	0	0	0	0	0
397066.283768577.2	397066.28	3768577	0	0	0	0	0	0	0	0	0	0	0	0	0	0	0
397166.283768577.2	397166.28	3768577	0	0	0	0	0	0	0	0	0	0	0	0	0	0	0
397266.283768577.2	397266.28	3768577	0	0	0	0	0	0	0	0	0	0	0	0	0	0	0
397366.283768577.2	397366.28	3768577	0	0	0	0	0	0	0	0	0	0	0	0	0	0	0
397466.283768577.2	397466.28	3768577	0	0	0	0	0	0	0	0	0	0	0	0	0	0	0
397566.283768577.2	397566.28	3768577	0	0	0	0	0	0	0	0	0	0	0	0	0	0	0
397666.283768577.2	397666.28	3768577	0	0	0	0	0	0	0	0	0	0	0	0	0	0	0
397766.283768577.2	397766.28	3768577	0	0	0	0	0	0	0	0	0	0	0	0	0	0	0
397866.283768577.2	397866.28	3768577	0	0	0	0	0	0	0	0	0	0	0	0	0	0	0
396166.283768677.2	396166.28	3768677	0	0	0	0	0	0	0	0	0	0	0	0	0	0	0
396266.283768677.2	396266.28	3768677	0	0	0	0	0	0	0	0	0	0	0	0	0	0	0
396366.283768677.2	396366.28	3768677	0	0	0	0	0	0	0	0	0	0	0	0	0	0	0
396466.283768677.2	396466.28	3768677	0	0	0	0	0	0	0	0	0	0	0	0	0	0	0
396566.283768677.2	396566.28	3768677	0	0	0	0	0	0	0	0	0	0	0	0	0	0	0
396666.283768677.2	396666.28	3768677	0	0	0	0	0	0	0	0	0	0	0	0	0	0	0
396766.283768677.2	396766.28	3768677	0	0	0	0	0	0	0	0	0	0	0	0	0	0	0
396866.283768677.2	396866.28	3768677	0	0	0	0	0	0	0	0	0	0	0	0	0	0	0
396966.283768677.2	396966.28	3768677	0	0	0	0	0	0	0	0	0	0	0	0	0	0	0
397066.283768677.2	397066.28	3768677	0	0	0	0	0	0	0	0	0	0	0	0	0	0	0
397166.283768677.2	397166.28	3768677	0	0	0	0	0	0	0	0	0	0	0	0	0	0	0
397366.283768677.2	397366.28	3768677	0	0	0	0	0	0	0	0	0	0	0	0	0	0	0
397466.283768677.2	397466.28	3768677	0	0	0	0	0	0	0	0	0	0	0	0	0	0	0
397566.283768677.2	397566.28	3768677	0	0	0	0	0	0	0	0	0	0	0	0	0	0	0
397666.283768677.2	397666.28	3768677	0	0	0	0	0	0	0	0	0	0	0	0	0	0	0
397766.283768677.2	397766.28	3768677	0	0	0	0	0	0	0	0	0	0	0	0	0	0	0
397866.283768677.2	397866.28	3768677	0	0	0	0	0	0	0	0	0	0	0	0	0	0	0
396166.283768777.2	396166.28	3768777	0	0	0	0	0	0	0	0	0	0	0	0	0	0	0
396266.283768777.2	396266.28	3768777	0	0	0	0	0	0	0	0	0	0	0	0	0	0	0
396366.283768777.2	396366.28	3768777	0	0	0	0	0	0	0	0	0	0	0	0	0	0	0
396466.283768777.2	396466.28	3768777	0	0	0	0	0	0	0	0	0	0	0	0	0	0	0
396566.283768777.2	396566.28	3768777	0	0	0	0	0	0	0	0	0	0	0	0	0	0	0

Garvey Reservoir Rehab - Unmitigated Proposed Pump Station - 3rd Trimester S			Demolition - 2025	Demolition - 2026	Site Preparation - 2034	te Preparation - 20	Grading - 2034	Grading - 2026	Infrastructure - 2034	nfrastructure - 203	Paving - 2025	rchitectural Coating - 202	Child Risk				
Unique Identifier	X (UTM)	Y (UTM)	1900	1900	2034	1900	2034	1900	2034	2035	1900	1900	3rd Trimester	0<2	2<16	Total	per million
396666.283768777.2	396666.28	3768777	0	0	0	0	0	0	0	0	0	0	0	0	0	0	0
396766.283768777.2	396766.28	3768777	0	0	0	0	0	0	0	0	0	0	0	0	0	0	0
396866.283768777.2	396866.28	3768777	0	0	0	0	0	0	0	0	0	0	0	0	0	0	0
396966.283768777.2	396966.28	3768777	0	0	0	0	0	0	0	0	0	0	0	0	0	0	0
397066.283768777.2	397066.28	3768777	0	0	0	0	0	0	0	0	0	0	0	0	0	0	0
397166.283768777.2	397166.28	3768777	0	0	0	0	0	0	0	0	0	0	0	0	0	0	0
397266.283768777.2	397266.28	3768777	0	0	0	0	0	0	0	0	0	0	0	0	0	0	0
397366.283768777.2	397366.28	3768777	0	0	0	0	0	0	0	0	0	0	0	0	0	0	0
397466.283768777.2	397466.28	3768777	0	0	0	0	0	0	0	0	0	0	0	0	0	0	0
397566.283768777.2	397566.28	3768777	0	0	0	0	0	0	0	0	0	0	0	0	0	0	0
397666.283768777.2	397666.28	3768777	0	0	0	0	0	0	0	0	0	0	0	0	0	0	0
397766.283768777.2	397766.28	3768777	0	0	0	0	0	0	0	0	0	0	0	0	0	0	0
397866.283768777.2	397866.28	3768777	0	0	0	0	0	0	0	0	0	0	0	0	0	0	0
396166.283768877.2	396166.28	3768877	0	0	0	0	0	0	0	0	0	0	0	0	0	0	0
396266.283768877.2	396266.28	3768877	0	0	0	0	0	0	0	0	0	0	0	0	0	0	0
396366.283768877.2	396366.28	3768877	0	0	0	0	0	0	0	0	0	0	0	0	0	0	0
396466.283768877.2	396466.28	3768877	0	0	0	0	0	0	0	0	0	0	0	0	0	0	0
396566.283768877.2	396566.28	3768877	0	0	0	0	0	0	0	0	0	0	0	0	0	0	0
396666.283768877.2	396666.28	3768877	0	0	0	0	0	0	0	0	0	0	0	0	0	0	0
396766.283768877.2	396766.28	3768877	0	0	0	0	0	0	0	0	0	0	0	0	0	0	0
396866.283768877.2	396866.28	3768877	0	0	0	0	0	0	0	0	0	0	0	0	0	0	0
396966.283768877.2	396966.28	3768877	0	0	0	0	0	0	0	0	0	0	0	0	0	0	0
397066.283768877.2	397066.28	3768877	0	0	0	0	0	0	0	0	0	0	0	0	0	0	0
397166.283768877.2	397166.28	3768877	0	0	0	0	0	0	0	0	0	0	0	0	0	0	0
397266.283768877.2	397266.28	3768877	0	0	0	0	0	0	0	0	0	0	0	0	0	0	0
397366.283768877.2	397366.28	3768877	0	0	0	0	0	0	0	0	0	0	0	0	0	0	0
397466.283768877.2	397466.28	3768877	0	0	0	0	0	0	0	0	0	0	0	0	0	0	0
397566.283768877.2	397566.28	3768877	0	0	0	0	0	0	0	0	0	0	0	0	0	0	0
397666.283768877.2	397666.28	3768877	0	0	0	0	0	0	0	0	0	0	0	0	0	0	0
397766.283768877.2	397766.28	3768877	0	0	0	0	0	0	0	0	0	0	0	0	0	0	0
397866.283768877.2	397866.28	3768877	0	0	0	0	0	0	0	0	0	0	0	0	0	0	0
3964253767739	396425	3767739	0	0	0	0	0	0	0	0	0	0	0	0	0	0	0
3964753767739	396475	3767739	0	0	0	0	0	0	0	0	0	0	0	0	0	0	0
3965253767739	396525	3767739	0	0	0	0	0	0	0	0	0	0	0	0	0	0	0
3965753767739	396575	3767739	0	0	0	0	0	0	0	0	0	0	0	0	0	0	0
3966253767739	396625	3767739	0	0	0	0	0	0	0	0	0	0	0	0	0	0	0
3966753767739	396675	3767739	0	0	0	0	0	0	0	0	0	0	0	0	0	0	0
3967253767739	396725	3767739	0	0	0	0	0	0	0	0	0	0	0	0	0	0	0
3967753767739	396775	3767739	0	0	0	0	0	0	0	0	0	0	0	0	0	0	0
3968253767739	396825	3767739	0	0	0	0	0	0	0	0	0	0	0	0	0	0	0
3968753767739	396875	3767739	0	0	0	0	0	0	0	0	0	0	0	0	0	0	0
3969253767739	396925	3767739	0	0	0	0	0	0	0	0	0	0	0	0	0	0	0
3969753767739	396975	3767739	0	0	0	0	0	0	0	0	0	0	0	0	0	0	0
3970253767739	397025	3767739	0	0	0	0	0	0	0	0	0	0	0	0	0	0	0
3970753767739	397075	3767739	0	0	0	0	0	0	0	0	0	0	0	0	0	0	0
3971253767739	397125	3767739	0	0	0	0	0	0	0	0	0	0	0	0	0	0	0
3971753767739	397175	3767739	0	0	0	0	0	0	0	0	0	0	0	0	0	0	0
3972253767739	397225	3767739	0	0	0	0	0	0	0	0	0	0	0	0	0	0	0
3972753767739	397275	3767739	0	0	0	0	0	0	0	0	0	0	0	0	0	0	0
3973253767739	397325	3767739	0	0	0	0	0	0	0	0	0	0	0	0	0	0	0
3973753767739	397375	3767739	0	0	0	0	0	0	0	0	0	0	0	0	0	0	0
3974253767739	397425	3767739	0	0	0	0	0	0	0	0	0	0	0	0	0	0	0
3974753767739	397475	3767739	0	0	0	0	0	0	0	0	0	0	0	0	0	0	0
3975253767739	397525	3767739	0	0	0	0	0	0	0	0	0	0	0	0	0	0	0
3964253767789	396425	3767789	0	0	0	0	0	0	0	0	0	0	0	0	0	0	0
3964753767789	396475	3767789	0	0	0	0	0	0	0	0	0	0	0	0	0	0	0
3965253767789	396525	3767789	0	0	0	0	0	0	0	0	0	0	0	0	0	0	0
3965753767789	396575	3767789	0	0	0	0	0	0	0	0	0	0	0	0	0	0	0
3966253767789	396625	3767789	0	0	0	0	0	0	0	0	0	0	0	0	0	0	0
3966753767789	396675	3767789	0	0	0	0	0	0	0	0	0	0	0	0	0	0	0
3967253767789	396725	3767789	0	0	0	0	0	0	0	0	0	0	0	0	0	0	0
3967753767789	396775	3767789	0	0	0	0	0	0	0	0	0	0	0	0	0	0	0
3968253767789	396825	3767789	0	0	0	0	0	0	0	0	0	0	0	0	0	0	0
3968753767789	396875	3767789	0	0	0	0	0	0	0	0	0	0	0	0	0	0	0
3969253767789	396925	3767789	0	0	0	0	0	0	0	0	0	0	0	0	0	0	0
3969753767789	396975	3767789	0	0	0	0	0	0	0	0	0	0	0	0	0	0	0
3970253767789	397025	3767789	0	0	0	0	0	0	0	0	0	0	0	0	0	0	0
3970753767789	397075	3767789	0	0	0	0	0	0	0	0	0	0	0	0	0	0	0
3971253767789	397125	3767789	0	0	0	0	0	0	0	0	0	0	0	0	0	0	0
3971753767789	397175	3767789	0	0	0	0	0	0	0	0	0	0	0	0	0	0	0
3972253767789	397225	3767789	0	0	0	0	0	0	0	0	0	0	0	0	0	0	0
3972753767789	397275	3767789	0	0	0	0	0	0	0	0	0	0	0	0	0	0	0
3973253767789	397325	3767789	0	0	0	0	0	0	0	0	0	0	0	0	0	0	0
3973753767789	397375	3767789	0	0	0	0	0	0	0	0	0	0	0	0	0	0	0
3974253767789	397425	3767789	0	0	0	0	0	0	0	0	0	0	0	0	0	0	0

Garvey Reservoir Rehab - Unmitigated Proposed Pump Station - 3rd Trimester S			Demolition - 2025	Demolition - 2026	Site Preparation - 2034	te Preparation - 20	Grading - 2034	Grading - 2026	Infrastructure - 2034	nfrastructure - 203	Paving - 2025	rchitectural Coating - 202	Child Risk				
Unique Identifier	X (UTM)	Y (UTM)	1900	1900	2034	1900	2034	1900	2034	2035	1900	1900	3rd Trimester	0<2	2<16	Total	per million
3974753767789	397475	3767789	0	0	0	0	0	0	0	0	0	0	0	0	0	0	0
3975253767789	397525	3767789	0	0	0	0	0	0	0	0	0	0	0	0	0	0	0
3964253767839	396425	3767839	0	0	0	0	0	0	0	0	0	0	0	0	0	0	0
3964753767839	396475	3767839	0	0	0	0	0	0	0	0	0	0	0	0	0	0	0
3965253767839	396525	3767839	0	0	0	0	0	0	0	0	0	0	0	0	0	0	0
3965753767839	396575	3767839	0	0	0	0	0	0	0	0	0	0	0	0	0	0	0
3966253767839	396625	3767839	0	0	0	0	0	0	0	0	0	0	0	0	0	0	0
3966753767839	396675	3767839	0	0	0	0	0	0	0	0	0	0	0	0	0	0	0
3967253767839	396725	3767839	0	0	0	0	0	0	0	0	0	0	0	0	0	0	0
3967753767839	396775	3767839	0	0	0	0	0	0	0	0	0	0	0	0	0	0	0
3968253767839	396825	3767839	0	0	0	0	0	0	0	0	0	0	0	0	0	0	0
3968753767839	396875	3767839	0	0	0	0	0	0	0	0	0	0	0	0	0	0	0
3969253767839	396925	3767839	0	0	0	0	0	0	0	0	0	0	0	0	0	0	0
3969753767839	396975	3767839	0	0	0	0	0	0	0	0	0	0	0	0	0	0	0
3970253767839	397025	3767839	0	0	0	0	0	0	0	0	0	0	0	0	0	0	0
3970753767839	397075	3767839	0	0	0	0	0	0	0	0	0	0	0	0	0	0	0
3971253767839	397125	3767839	0	0	0	0	0	0	0	0	0	0	0	0	0	0	0
3971753767839	397175	3767839	0	0	0	0	0	0	0	0	0	0	0	0	0	0	0
3972253767839	397225	3767839	0	0	0	0	0	0	0	0	0	0	0	0	0	0	0
3972753767839	397275	3767839	0	0	0	0	0	0	0	0	0	0	0	0	0	0	0
3973253767839	397325	3767839	0	0	0	0	0	0	0	0	0	0	0	0	0	0	0
3973753767839	397375	3767839	0	0	0	0	0	0	0	0	0	0	0	0	0	0	0
3974753767839	397475	3767839	0	0	0	0	0	0	0	0	0	0	0	0	0	0	0
3975253767839	397525	3767839	0	0	0	0	0	0	0	0	0	0	0	0	0	0	0
3964253767889	396425	3767889	0	0	0	0	0	0	0	0	0	0	0	0	0	0	0
3964753767889	396475	3767889	0	0	0	0	0	0	0	0	0	0	0	0	0	0	0
3965253767889	396525	3767889	0	0	0	0	0	0	0	0	0	0	0	0	0	0	0
3965753767889	396575	3767889	0	0	0	0	0	0	0	0	0	0	0	0	0	0	0
3974753767889	397475	3767889	0	0	0	0	0	0	0	0	0	0	0	0	0	0	0
3975253767889	397525	3767889	0	0	0	0	0	0	0	0	0	0	0	0	0	0	0
3964253767939	396425	3767939	0	0	0	0	0	0	0	0	0	0	0	0	0	0	0
3964753767939	396475	3767939	0	0	0	0	0	0	0	0	0	0	0	0	0	0	0
3965253767939	396525	3767939	0	0	0	0	0	0	0	0	0	0	0	0	0	0	0
3974753767939	397475	3767939	0	0	0	0	0	0	0	0	0	0	0	0	0	0	0
3975253767939	397525	3767939	0	0	0	0	0	0	0	0	0	0	0	0	0	0	0
3964253767989	396425	3767989	0	0	0	0	0	0	0	0	0	0	0	0	0	0	0
3964753767989	396475	3767989	0	0	0	0	0	0	0	0	0	0	0	0	0	0	0
3974753767989	397475	3767989	0	0	0	0	0	0	0	0	0	0	0	0	0	0	0
3975253767989	397525	3767989	0	0	0	0	0	0	0	0	0	0	0	0	0	0	0
3964253768039	396425	3768039	0	0	0	0	0	0	0	0	0	0	0	0	0	0	0
3964753768039	396475	3768039	0	0	0	0	0	0	0	0	0	0	0	0	0	0	0
3974753768039	397475	3768039	0	0	0	0	0	0	0	0	0	0	0	0	0	0	0
3975253768039	397525	3768039	0	0	0	0	0	0	0	0	0	0	0	0	0	0	0
3964253768089	396425	3768089	0	0	0	0	0	0	0	0	0	0	0	0	0	0	0
3964753768089	396475	3768089	0	0	0	0	0	0	0	0	0	0	0	0	0	0	0
3974753768089	397475	3768089	0	0	0	0	0	0	0	0	0	0	0	0	0	0	0
3975253768089	397525	3768089	0	0	0	0	0	0	0	0	0	0	0	0	0	0	0
3964253768139	396425	3768139	0	0	0	0	0	0	0	0	0	0	0	0	0	0	0
3964753768139	396475	3768139	0	0	0	0	0	0	0	0	0	0	0	0	0	0	0
3974253768139	397425	3768139	0	0	0	0	0	0	0	0	0	0	0	0	0	0	0
3974753768139	397475	3768139	0	0	0	0	0	0	0	0	0	0	0	0	0	0	0
3975253768139	397525	3768139	0	0	0	0	0	0	0	0	0	0	0	0	0	0	0
3964253768189	396425	3768189	0	0	0	0	0	0	0	0	0	0	0	0	0	0	0
3964753768189	396475	3768189	0	0	0	0	0	0	0	0	0	0	0	0	0	0	0
3973753768189	397375	3768189	0	0	0	0	0	0	0	0	0	0	0	0	0	0	0
3974253768189	397425	3768189	0	0	0	0	0	0	0	0	0	0	0	0	0	0	0
3974753768189	397475	3768189	0	0	0	0	0	0	0	0	0	0	0	0	0	0	0
3975253768189	397525	3768189	0	0	0	0	0	0	0	0	0	0	0	0	0	0	0
3964253768239	396425	3768239	0	0	0	0	0	0	0	0	0	0	0	0	0	0	0
3964753768239	396475	3768239	0	0	0	0	0	0	0	0	0	0	0	0	0	0	0
3973753768239	397375	3768239	0	0	0	0	0	0	0	0	0	0	0	0	0	0	0
3974253768239	397425	3768239	0	0	0	0	0	0	0	0	0	0	0	0	0	0	0
3974753768239	397475	3768239	0	0	0	0	0	0	0	0	0	0	0	0	0	0	0
3975253768239	397525	3768239	0	0	0	0	0	0	0	0	0	0	0	0	0	0	0
3964253768289	396425	3768289	0	0	0	0	0	0	0	0	0	0	0	0	0	0	0
3964753768289	396475	3768289	0	0	0	0	0	0	0	0	0	0	0	0	0	0	0
3973253768289	397325	3768289	0	0	0	0	0	0	0	0	0	0	0	0	0	0	0
3973753768289	397375	3768289	0	0	0	0	0	0	0	0	0	0	0	0	0	0	0
3974253768289	397425	3768289	0	0	0	0	0	0	0	0	0	0	0	0	0	0	0
3974753768289	397475	3768289	0	0	0	0	0	0	0	0	0	0	0	0	0	0	0
3975253768289	397525	3768289	0	0	0	0	0	0	0	0	0	0	0	0	0	0	0
3964253768339	396425	3768339	0	0	0	0	0	0	0	0	0	0	0	0	0	0	0
3964753768339	396475	3768339	0	0	0	0	0	0	0	0	0	0	0	0	0	0	0
3965253768339	396525	3768339	0	0	0	0	0	0	0	0	0	0	0	0	0	0	0
3972753768339	397275	3768339	0	0	0	0	0	0	0	0	0	0	0	0	0	0	0

Garvey Reservoir Rehab - Unmitigated Proposed Pump Station - 3rd Trimester S			Demolition - 2025	Demolition - 2026	Site Preparation - 2034	te Preparation - 20	Grading - 2034	Grading - 2026	Infrastructure - 2034	nfrastructure - 203	Paving - 2025	rchitectural Coating - 202	Child Risk				
Unique Identifier	X (UTM)	Y (UTM)	1900	1900	2034	1900	2034	1900	2034	2035	1900	1900	3rd Trimester	0<2	2<16	Total	per million
3973253768339	397325	3768339	0	0	0	0	0	0	0	0	0	0	0	0	0	0	0
3973753768339	397375	3768339	0	0	0	0	0	0	0	0	0	0	0	0	0	0	0
3974253768339	397425	3768339	0	0	0	0	0	0	0	0	0	0	0	0	0	0	0
3974753768339	397475	3768339	0	0	0	0	0	0	0	0	0	0	0	0	0	0	0
3975253768339	397525	3768339	0	0	0	0	0	0	0	0	0	0	0	0	0	0	0
3964253768389	396425	3768389	0	0	0	0	0	0	0	0	0	0	0	0	0	0	0
3964753768389	396475	3768389	0	0	0	0	0	0	0	0	0	0	0	0	0	0	0
3965253768389	396525	3768389	0	0	0	0	0	0	0	0	0	0	0	0	0	0	0
3972253768389	397225	3768389	0	0	0	0	0	0	0	0	0	0	0	0	0	0	0
3972753768389	397275	3768389	0	0	0	0	0	0	0	0	0	0	0	0	0	0	0
3973253768389	397325	3768389	0	0	0	0	0	0	0	0	0	0	0	0	0	0	0
3973753768389	397375	3768389	0	0	0	0	0	0	0	0	0	0	0	0	0	0	0
3974253768389	397425	3768389	0	0	0	0	0	0	0	0	0	0	0	0	0	0	0
3974753768389	397475	3768389	0	0	0	0	0	0	0	0	0	0	0	0	0	0	0
3975253768389	397525	3768389	0	0	0	0	0	0	0	0	0	0	0	0	0	0	0
3964253768439	396425	3768439	0	0	0	0	0	0	0	0	0	0	0	0	0	0	0
3964753768439	396475	3768439	0	0	0	0	0	0	0	0	0	0	0	0	0	0	0
3965253768439	396525	3768439	0	0	0	0	0	0	0	0	0	0	0	0	0	0	0
3971753768439	397175	3768439	0	0	0	0	0	0	0	0	0	0	0	0	0	0	0
3972253768439	397225	3768439	0	0	0	0	0	0	0	0	0	0	0	0	0	0	0
3972753768439	397275	3768439	0	0	0	0	0	0	0	0	0	0	0	0	0	0	0
3973253768439	397325	3768439	0	0	0	0	0	0	0	0	0	0	0	0	0	0	0
3973753768439	397375	3768439	0	0	0	0	0	0	0	0	0	0	0	0	0	0	0
3974253768439	397425	3768439	0	0	0	0	0	0	0	0	0	0	0	0	0	0	0
3974753768439	397475	3768439	0	0	0	0	0	0	0	0	0	0	0	0	0	0	0
3975253768439	397525	3768439	0	0	0	0	0	0	0	0	0	0	0	0	0	0	0
3964253768489	396425	3768489	0	0	0	0	0	0	0	0	0	0	0	0	0	0	0
3964753768489	396475	3768489	0	0	0	0	0	0	0	0	0	0	0	0	0	0	0
3965253768489	396525	3768489	0	0	0	0	0	0	0	0	0	0	0	0	0	0	0
3970753768489	397075	3768489	0	0	0	0	0	0	0	0	0	0	0	0	0	0	0
3971253768489	397125	3768489	0	0	0	0	0	0	0	0	0	0	0	0	0	0	0
3971753768489	397175	3768489	0	0	0	0	0	0	0	0	0	0	0	0	0	0	0
3972253768489	397225	3768489	0	0	0	0	0	0	0	0	0	0	0	0	0	0	0
3972753768489	397275	3768489	0	0	0	0	0	0	0	0	0	0	0	0	0	0	0
3973253768489	397325	3768489	0	0	0	0	0	0	0	0	0	0	0	0	0	0	0
3973753768489	397375	3768489	0	0	0	0	0	0	0	0	0	0	0	0	0	0	0
3974253768489	397425	3768489	0	0	0	0	0	0	0	0	0	0	0	0	0	0	0
3974753768489	397475	3768489	0	0	0	0	0	0	0	0	0	0	0	0	0	0	0
3975253768489	397525	3768489	0	0	0	0	0	0	0	0	0	0	0	0	0	0	0
3964253768539	396425	3768539	0	0	0	0	0	0	0	0	0	0	0	0	0	0	0
3964753768539	396475	3768539	0	0	0	0	0	0	0	0	0	0	0	0	0	0	0
3965253768539	396525	3768539	0	0	0	0	0	0	0	0	0	0	0	0	0	0	0
3965753768539	396575	3768539	0	0	0	0	0	0	0	0	0	0	0	0	0	0	0
3970253768539	397025	3768539	0	0	0	0	0	0	0	0	0	0	0	0	0	0	0
3970753768539	397075	3768539	0	0	0	0	0	0	0	0	0	0	0	0	0	0	0
3971253768539	397125	3768539	0	0	0	0	0	0	0	0	0	0	0	0	0	0	0
3971753768539	397175	3768539	0	0	0	0	0	0	0	0	0	0	0	0	0	0	0
3972253768539	397225	3768539	0	0	0	0	0	0	0	0	0	0	0	0	0	0	0
3972753768539	397275	3768539	0	0	0	0	0	0	0	0	0	0	0	0	0	0	0
3973253768539	397325	3768539	0	0	0	0	0	0	0	0	0	0	0	0	0	0	0
3973753768539	397375	3768539	0	0	0	0	0	0	0	0	0	0	0	0	0	0	0
3974253768539	397425	3768539	0	0	0	0	0	0	0	0	0	0	0	0	0	0	0
3974753768539	397475	3768539	0	0	0	0	0	0	0	0	0	0	0	0	0	0	0
3975253768539	397525	3768539	0	0	0	0	0	0	0	0	0	0	0	0	0	0	0
3964253768589	396425	3768589	0	0	0	0	0	0	0	0	0	0	0	0	0	0	0
3964753768589	396475	3768589	0	0	0	0	0	0	0	0	0	0	0	0	0	0	0
3965253768589	396525	3768589	0	0	0	0	0	0	0	0	0	0	0	0	0	0	0
3965753768589	396575	3768589	0	0	0	0	0	0	0	0	0	0	0	0	0	0	0
3966253768589	396625	3768589	0	0	0	0	0	0	0	0	0	0	0	0	0	0	0
3968253768589	396825	3768589	0	0	0	0	0	0	0	0	0	0	0	0	0	0	0
3968753768589	396875	3768589	0	0	0	0	0	0	0	0	0	0	0	0	0	0	0
3969253768589	396925	3768589	0	0	0	0	0	0	0	0	0	0	0	0	0	0	0
3969753768589	396975	3768589	0	0	0	0	0	0	0	0	0	0	0	0	0	0	0
3970253768589	397025	3768589	0	0	0	0	0	0	0	0	0	0	0	0	0	0	0
3970753768589	397075	3768589	0	0	0	0	0	0	0	0	0	0	0	0	0	0	0
3971253768589	397125	3768589	0	0	0	0	0	0	0	0	0	0	0	0	0	0	0
3971753768589	397175	3768589	0	0	0	0	0	0	0	0	0	0	0	0	0	0	0
3972253768589	397225	3768589	0	0	0	0	0	0	0	0	0	0	0	0	0	0	0
3972753768589	397275	3768589	0	0	0	0	0	0	0	0	0	0	0	0	0	0	0
3973253768589	397325	3768589	0	0	0	0	0	0	0	0	0	0	0	0	0	0	0
3973753768589	397375	3768589	0	0	0	0	0	0	0	0	0	0	0	0	0	0	0
3974253768589	397425	3768589	0	0	0	0	0	0	0	0	0	0	0	0	0	0	0
3974753768589	397475	3768589	0	0	0	0	0	0	0	0	0	0	0	0	0	0	0
3975253768589	397525	3768589	0	0	0	0	0	0	0	0	0	0	0	0	0	0	0
3964253768639	396425	3768639	0	0	0	0	0	0	0	0	0	0	0	0	0	0	0

Garvey Reservoir Rehab - Unmitigated Proposed Pump Station - 3rd Trimester S			Demolition - 2025	Demolition - 2026	Site Preparation - 2034	te Preparation - 20	Grading - 2034	Grading - 2026	Infrastructure - 2034	nfrastructure - 203	Paving - 2025	rchitectural Coating - 202	Child Risk				
Unique Identifier	X (UTM)	Y (UTM)	1900	1900	2034	1900	2034	1900	2034	2035	1900	1900	3rd Trimester	0<2	2<16	Total	per million
3964753768639	396475	3768639	0	0	0	0	0	0	0	0	0	0	0	0	0	0	0
3965253768639	396525	3768639	0	0	0	0	0	0	0	0	0	0	0	0	0	0	0
3965753768639	396575	3768639	0	0	0	0	0	0	0	0	0	0	0	0	0	0	0
3966253768639	396625	3768639	0	0	0	0	0	0	0	0	0	0	0	0	0	0	0
3966753768639	396675	3768639	0	0	0	0	0	0	0	0	0	0	0	0	0	0	0
3967253768639	396725	3768639	0	0	0	0	0	0	0	0	0	0	0	0	0	0	0
3967753768639	396775	3768639	0	0	0	0	0	0	0	0	0	0	0	0	0	0	0
3968253768639	396825	3768639	0	0	0	0	0	0	0	0	0	0	0	0	0	0	0
3968753768639	396875	3768639	0	0	0	0	0	0	0	0	0	0	0	0	0	0	0
3969253768639	396925	3768639	0	0	0	0	0	0	0	0	0	0	0	0	0	0	0
3969753768639	396975	3768639	0	0	0	0	0	0	0	0	0	0	0	0	0	0	0
3970253768639	397025	3768639	0	0	0	0	0	0	0	0	0	0	0	0	0	0	0
3970753768639	397075	3768639	0	0	0	0	0	0	0	0	0	0	0	0	0	0	0
3971253768639	397125	3768639	0	0	0	0	0	0	0	0	0	0	0	0	0	0	0
3971753768639	397175	3768639	0	0	0	0	0	0	0	0	0	0	0	0	0	0	0
3972253768639	397225	3768639	0	0	0	0	0	0	0	0	0	0	0	0	0	0	0
3972753768639	397275	3768639	0	0	0	0	0	0	0	0	0	0	0	0	0	0	0
3973253768639	397325	3768639	0	0	0	0	0	0	0	0	0	0	0	0	0	0	0
3973753768639	397375	3768639	0	0	0	0	0	0	0	0	0	0	0	0	0	0	0
3974253768639	397425	3768639	0	0	0	0	0	0	0	0	0	0	0	0	0	0	0
3974753768639	397475	3768639	0	0	0	0	0	0	0	0	0	0	0	0	0	0	0
3975253768639	397525	3768639	0	0	0	0	0	0	0	0	0	0	0	0	0	0	0
3964253768689	396425	3768689	0	0	0	0	0	0	0	0	0	0	0	0	0	0	0
3964753768689	396475	3768689	0	0	0	0	0	0	0	0	0	0	0	0	0	0	0
3965253768689	396525	3768689	0	0	0	0	0	0	0	0	0	0	0	0	0	0	0
3965753768689	396575	3768689	0	0	0	0	0	0	0	0	0	0	0	0	0	0	0
3966253768689	396625	3768689	0	0	0	0	0	0	0	0	0	0	0	0	0	0	0
3966753768689	396675	3768689	0	0	0	0	0	0	0	0	0	0	0	0	0	0	0
3967253768689	396725	3768689	0	0	0	0	0	0	0	0	0	0	0	0	0	0	0
3967753768689	396775	3768689	0	0	0	0	0	0	0	0	0	0	0	0	0	0	0
3968253768689	396825	3768689	0	0	0	0	0	0	0	0	0	0	0	0	0	0	0
3968753768689	396875	3768689	0	0	0	0	0	0	0	0	0	0	0	0	0	0	0
3969253768689	396925	3768689	0	0	0	0	0	0	0	0	0	0	0	0	0	0	0
3969753768689	396975	3768689	0	0	0	0	0	0	0	0	0	0	0	0	0	0	0
3970253768689	397025	3768689	0	0	0	0	0	0	0	0	0	0	0	0	0	0	0
3970753768689	397075	3768689	0	0	0	0	0	0	0	0	0	0	0	0	0	0	0
3971253768689	397125	3768689	0	0	0	0	0	0	0	0	0	0	0	0	0	0	0
3971753768689	397175	3768689	0	0	0	0	0	0	0	0	0	0	0	0	0	0	0
3972253768689	397225	3768689	0	0	0	0	0	0	0	0	0	0	0	0	0	0	0
3972753768689	397275	3768689	0	0	0	0	0	0	0	0	0	0	0	0	0	0	0
3973253768689	397325	3768689	0	0	0	0	0	0	0	0	0	0	0	0	0	0	0
3973753768689	397375	3768689	0	0	0	0	0	0	0	0	0	0	0	0	0	0	0
3974253768689	397425	3768689	0	0	0	0	0	0	0	0	0	0	0	0	0	0	0
3974753768689	397475	3768689	0	0	0	0	0	0	0	0	0	0	0	0	0	0	0
3975253768689	397525	3768689	0	0	0	0	0	0	0	0	0	0	0	0	0	0	0

Garvey Reservoir Rehab - Unmitigated Proposed Pump Station - 3rd Trimester Start

Maximum Individual Non-Cancer Impact Calculations - Sensitive Receptors (Maximum Impacted Senior Residential Receptor) (IMPACT AT ALL OTHER LOCATIONS ON THE PROJECT SITE WOULD BE LESS THAN SHOWN)

Maximum Non-cancer Chronic Hazards / Toxicological Endpoints*

Receptor Group	Pollutant	CREL[1]	CONC	WFrac	$CONC_{WF}$	HI		ALIM	BN	CVS	DEV	ENDC	EYE	HEM	IMMUN	KIDN	NS	REPRO	RESP	SK
Project:																				
MEI - Max	DPM	5.00E+00	7.39E-02	1.00E+00	7.39E-02	0.015		-	-	-	-	-	-	-	-	-	-	-	1.48E-02	-
							Total Risk				-			-				-	0.015	
							Threshold				1.00			1.00				1.00	1.00	
							Over?				NO			NO				NO	NO	

Notes:

1. California Air Resources Board, "Consolidated Table of OEHHA/ARB Approved Risk Assessment Health Values," "OEHHA/ARB Approved Chronic Reference Exposure Levels and Target Organs," "OEHHA/ARB Approved Acute Reference Exposure Levels and Target Organs," and "OEHHA/ARB Approved 8-Hour Reference Exposure Levels and Target Organs," http://www.arb.ca.gov/toxics/healthval/healthval.htm. Tables last updated: May 8, 2018. Downloaded: 08/14/18.

Source: ESA, 2020

Where:

$CONC_{WF}$	Pollutant Concentration ($\mu g/m^3$) multiplied by the weight fraction
CREL	Chronic Reference Exposure Level
HI	Hazard Index
MEI	Maximally Exposed Individual
WFrac	Weight fraction of speciated component

* Key to Toxicological Endpoints

ALIM	Alimentary Tract	EYE	Eye	NS	Nervous System
BN	Bone	HEM	Hematologic System	REPRO	Reproductive System
CVS	Cardiovascular System	IMMUN	Immune System	RESP	Respiratory System
DEV	Developmental System	KIDN	Kidney	SK	Skin
ENDC	Endocrine System				

Garvey Reservoir Rehab - Mitigated Proposed Pump Station - 3rd Trimester Start

Cancer Risk Summary & Maximum Annual GLC for Chronic Calculations

Cancer Risk Summary

323

Max Risk: 0.767723

XY	X	Y	Offroad Risk	Haul Risk	Total Risk
7449041451	574490	4145130	0.001027895	0	0.001028
7448041451	574480	4145140	0.001136427	0	0.001136
7449041451	574490	4145140	0.001303209	0	0.001303
7449041451	574490	4145150	0.001480432	0	0.00148
7450041451	574500	4145150	0.001708762	0	0.001709
7446041451	574460	4145160	0.001916759	0	0.001917
7449041451	574490	4145160	0.002116513	0	0.002117
7450041451	574500	4145160	0.002349513	0	0.00235
7451041451	574510	4145160	0.002644885	0	0.002645
7446041451	574460	4145170	0.002869643	0	0.00287
7447041451	574470	4145170	0.002961964	0	0.002962
7448041451	574480	4145170	0.002938334	0	0.002938
7449041451	574490	4145170	0.002969383	0	0.002969
7450041451	574500	4145170	0.002945478	0	0.002945
7451041451	574510	4145170	0.002803425	0	0.002803
7452041451	574520	4145170	0.002611639	0	0.002612
7446041451	574460	4145180	0.002320113	0	0.00232
7447041451	574470	4145180	0.002076397	0	0.002076
7448041451	574480	4145180	0.00108065	0	0.001081
7449041451	574490	4145180	0.001187533	0	0.001188
7450041451	574500	4145180	0.001382616	0	0.001383
7451041451	574510	4145180	0.001600505	0	0.001601
7452041451	574520	4145180	0.001853838	0	0.001854
7453041451	574530	4145180	0.002129701	0	0.00213
7445041451	574450	4145190	0.002444307	0	0.002444
7446041451	574460	4145190	0.002810568	0	0.002811
7447041451	574470	4145190	0.003279042	0	0.003279
7448041451	574480	4145190	0.003699158	0	0.003699
7449041451	574490	4145190	0.003947545	0	0.003948
7450041451	574500	4145190	0.003992881	0	0.003993
7451041451	574510	4145190	0.003983539	0	0.003984
7452041451	574520	4145190	0.003948919	0	0.003949
7444041452	574440	4145200	0.003720864	0	0.003721
7445041452	574450	4145200	0.003374111	0	0.003374
7446041452	574460	4145200	0.00297845	0	0.002978
7447041452	574470	4145200	0.002588559	0	0.002589
7448041452	574480	4145200	0.0011095	0	0.00111
7449041452	574490	4145200	0.001241937	0	0.001242
7450041452	574500	4145200	0.001435371	0	0.001435
7451041452	574510	4145200	0.001688155	0	0.001688
7443041452	574430	4145210	0.002007431	0	0.002007
7444041452	574440	4145210	0.002397322	0	0.002397
7445041452	574450	4145210	0.002763309	0	0.002763
7446041452	574460	4145210	0.003373287	0	0.003373
7447041452	574470	4145210	0.004072838	0	0.004073
7448041452	574480	4145210	0.004817725	0	0.004818
7449041452	574490	4145210	0.005457927	0	0.005458
7450041452	574500	4145210	0.005732142	0	0.005732
7451041452	574510	4145210	0.005724998	0	0.005725
7443041452	574430	4145220	0.005657955	0	0.005658
7444041452	574440	4145220	0.005195801	0	0.005196
7445041452	574450	4145220	0.004559171	0	0.004559
7446041452	574460	4145220	0.003861269	0	0.003861
7447041452	574470	4145220	0.003222441	0	0.003222
7448041452	574480	4145220	0.001146593	0	0.001147
7449041452	574490	4145220	0.001292493	0	0.001292
7450041452	574500	4145220	0.001507085	0	0.001507
7451041452	574510	4145220	0.001793389	0	0.001793
7452041452	574520	4145220	0.002141516	0	0.002142
7453041452	574530	4145220	0.002525363	0	0.002525
7444041452	574440	4145230	0.003145781	0	0.003146
7445041452	574450	4145230	0.004059649	0	0.00406

Max GLC for Chronic Calcs

Max GLC: 0.014082

XY	X	Y	2025	2026	2027	2034	2035
57449041451	574490	4145130	0	0	0	1.885E-05	4.714E-06
57448041451	574480	4145140	0	0	0	2.084E-05	5.211E-06
57449041451	574490	4145140	0	0	0	2.39E-05	5.976E-06
57449041451	574490	4145150	0	0	0	2.715E-05	6.789E-06
57450041451	574500	4145150	0	0	0	3.134E-05	7.836E-06
57446041451	574460	4145160	0	0	0	3.516E-05	8.79E-06
57449041451	574490	4145160	0	0	0	3.882E-05	9.706E-06
57450041451	574500	4145160	0	0	0	4.31E-05	1.077E-05
57451041451	574510	4145160	0	0	0	4.851E-05	1.213E-05
57446041451	574460	4145170	0	0	0	5.264E-05	1.316E-05
57447041451	574470	4145170	0	0	0	5.433E-05	1.358E-05
57448041451	574480	4145170	0	0	0	5.39E-05	1.347E-05
57449041451	574490	4145170	0	0	0	5.447E-05	1.362E-05
57450041451	574500	4145170	0	0	0	5.403E-05	1.351E-05
57451041451	574510	4145170	0	0	0	5.142E-05	1.286E-05
57452041451	574520	4145170	0	0	0	4.79E-05	1.198E-05
57446041451	574460	4145180	0	0	0	4.256E-05	1.064E-05
57447041451	574470	4145180	0	0	0	3.809E-05	9.522E-06
57448041451	574480	4145180	0	0	0	1.982E-05	4.955E-06
57449041451	574490	4145180	0	0	0	2.178E-05	5.446E-06
57450041451	574500	4145180	0	0	0	2.536E-05	6.34E-06
57451041451	574510	4145180	0	0	0	2.936E-05	7.339E-06
57452041451	574520	4145180	0	0	0	3.4E-05	8.501E-06
57453041451	574530	4145180	0	0	0	3.906E-05	9.766E-06
57445041451	574450	4145190	0	0	0	4.483E-05	1.121E-05
57446041451	574460	4145190	0	0	0	5.155E-05	1.289E-05
57447041451	574470	4145190	0	0	0	6.015E-05	1.504E-05
57448041451	574480	4145190	0	0	0	6.785E-05	1.696E-05
57449041451	574490	4145190	0	0	0	7.241E-05	1.81E-05
57450041451	574500	4145190	0	0	0	7.324E-05	1.831E-05
57451041451	574510	4145190	0	0	0	7.307E-05	1.827E-05
57452041451	574520	4145190	0	0	0	7.243E-05	1.811E-05
57444041452	574440	4145200	0	0	0	6.825E-05	1.706E-05
57445041452	574450	4145200	0	0	0	6.189E-05	1.547E-05
57446041452	574460	4145200	0	0	0	5.463E-05	1.366E-05
57447041452	574470	4145200	0	0	0	4.748E-05	1.187E-05
57448041452	574480	4145200	0	0	0	2.035E-05	5.088E-06
57449041452	574490	4145200	0	0	0	2.278E-05	5.695E-06
57450041452	574500	4145200	0	0	0	2.633E-05	6.582E-06
57451041452	574510	4145200	0	0	0	3.097E-05	7.741E-06
57443041452	574430	4145210	0	0	0	3.682E-05	9.205E-06
57444041452	574440	4145210	0	0	0	4.397E-05	1.099E-05
57445041452	574450	4145210	0	0	0	5.069E-05	1.267E-05
57446041452	574460	4145210	0	0	0	6.187E-05	1.547E-05
57447041452	574470	4145210	0	0	0	7.471E-05	1.868E-05
57448041452	574480	4145210	0	0	0	8.837E-05	2.209E-05
57449041452	574490	4145210	0	0	0	0.0001001	2.503E-05
57450041452	574500	4145210	0	0	0	0.0001051	2.629E-05
57451041452	574510	4145210	0	0	0	0.000105	2.625E-05
57443041452	574430	4145220	0	0	0	0.0001038	2.595E-05
57444041452	574440	4145220	0	0	0	9.53E-05	2.383E-05
57445041452	574450	4145220	0	0	0	8.363E-05	2.091E-05
57446041452	574460	4145220	0	0	0	7.083E-05	1.771E-05
57447041452	574470	4145220	0	0	0	5.911E-05	1.478E-05
57448041452	574480	4145220	0	0	0	2.103E-05	5.258E-06
57449041452	574490	4145220	0	0	0	2.371E-05	5.927E-06
57450041452	574500	4145220	0	0	0	2.764E-05	6.911E-06
57451041452	574510	4145220	0	0	0	3.29E-05	8.224E-06
57452041452	574520	4145220	0	0	0	3.928E-05	9.82E-06
57453041452	574530	4145220	0	0	0	4.632E-05	1.158E-05
57444041452	574440	4145230	0	0	0	5.77E-05	1.443E-05
57445041452	574450	4145230	0	0	0	7.446E-05	1.862E-05

Garvey Reservoir Rehab - Mitigated Proposed Pump Station - 3rd Trimester Start

Cancer Risk Summary & Maximum Annual GLC for Chronic Calculations

Cancer Risk Summary

323

Max Risk: 0.767723

XY	X	Y	Offroad Risk	Haul Risk	Total Risk
7446041452:	574460	4145230	0.005246083	0	0.005246
7447041452:	574470	4145230	0.00653473	0	0.006535
7448041452:	574480	4145230	0.007895914	0	0.007896
7449041452:	574490	4145230	0.009058444	0	0.009058
7450041452:	574500	4145230	0.00911587	0	0.009116
7451041452:	574510	4145230	0.008921336	0	0.008921
7452041452:	574520	4145230	0.00780689	0	0.007807
7444041452	574440	4145240	0.00642345	0	0.006423
7445041452	574450	4145240	0.005112273	0	0.005112
7446041452	574460	4145240	0.004018709	0	0.004019
7447041452	574470	4145240	0.001168849	0	0.001169
7448041452	574480	4145240	0.001348545	0	0.001349
7449041452	574490	4145240	0.00156451	0	0.001565
7450041452	574500	4145240	0.001857135	0	0.001857
7451041452	574510	4145240	0.002209108	0	0.002209
7445041452	574450	4145250	0.002716874	0	0.002717
7446041452	574460	4145250	0.003535673	0	0.003536
7447041452	574470	4145250	0.004744912	0	0.004745
7448041452	574480	4145250	0.006500109	0	0.0065
7446041452	574460	4145260	0.008943043	0	0.008943
7447041452	574470	4145260	0.012055578	0	0.012056
7448041452	574480	4145260	0.015542067	0	0.015542
7447041452	574470	4145270	0.016865609	0	0.016866
7449041451	574490	4145130	0.016049833	0	0.01605
7448041451	574480	4145140	0.012905425	0	0.012905
7449041451	574490	4145140	0.009481582	0	0.009482
7449041451	574490	4145150	0.006882032	0	0.006882
7450041451	574500	4145150	0.005060892	0	0.005061
7446041451	574460	4145160	0.001180939	0	0.001181
7449041451	574490	4145160	0.001367779	0	0.001368
7450041451	574500	4145160	0.001602153	0	0.001602
7451041451	574510	4145160	0.001894778	0	0.001895
7446041451	574460	4145170	0.002281372	0	0.002281
7447041451	574470	4145170	0.035462785	0	0.035463
7448041451	574480	4145170	0.023927887	0	0.023928
7449041451	574490	4145170	0.014473507	0	0.014474
7450041451	574500	4145170	0.009196925	0	0.009197
7451041451	574510	4145170	0.006196769	0	0.006197
7452041451	574520	4145170	0.001176268	0	0.001176
7446041451	574460	4145180	0.001368603	0	0.001369
7447041451	574470	4145180	0.001606824	0	0.001607
7448041451	574480	4145180	0.001900273	0	0.0019
7449041451	574490	4145180	0.126990216	0	0.12699
7450041451	574500	4145180	0.045045755	0	0.045046
7451041451	574510	4145180	0.020460631	0	0.020461
7452041451	574520	4145180	0.011717892	0	0.011718
7453041451	574530	4145180	0.007151027	0	0.007151
7445041451	574450	4145190	0.001185885	0	0.001186
7446041451	574460	4145190	0.001357887	0	0.001358
7447041451	574470	4145190	0.001593361	0	0.001593
7448041451	574480	4145190	0.001907692	0	0.001908
7449041451	574490	4145190	0.661401309	0	0.661401
7450041451	574500	4145190	0.08202744	0	0.082027
7451041451	574510	4145190	0.029103356	0	0.029103
7452041451	574520	4145190	0.014567477	0	0.014567
7444041452	574440	4145200	0.008469898	0	0.00847
7445041452	574450	4145200	0.001175444	0	0.001175
7446041452	574460	4145200	0.001350469	0	0.00135
7447041452	574470	4145200	0.001582095	0	0.001582
7448041452	574480	4145200	0.001877467	0	0.001877
7449041452	574490	4145200	0.251876559	0	0.251877
7450041452	574500	4145200	0.083246846	0	0.083247

Max GLC for Chronic Calcs

Max GLC: 0.014082

XY	X	Y	2025	2026	2027	2034	2035
57446041452:	574460	4145230	0	0	0	9.623E-05	2.406E-05
57447041452:	574470	4145230	0	0	0	0.0001199	2.997E-05
57448041452:	574480	4145230	0	0	0	0.0001448	3.621E-05
57449041452:	574490	4145230	0	0	0	0.0001662	4.154E-05
57450041452:	574500	4145230	0	0	0	0.0001672	4.18E-05
57451041452:	574510	4145230	0	0	0	0.0001636	4.091E-05
57452041452:	574520	4145230	0	0	0	0.0001432	3.58E-05
57444041452	574440	4145240	0	0	0	0.0001178	2.946E-05
57445041452	574450	4145240	0	0	0	9.377E-05	2.344E-05
57446041452	574460	4145240	0	0	0	7.371E-05	1.843E-05
57447041452	574470	4145240	0	0	0	2.144E-05	5.36E-06
57448041452	574480	4145240	0	0	0	2.474E-05	6.184E-06
57449041452	574490	4145240	0	0	0	2.87E-05	7.174E-06
57450041452	574500	4145240	0	0	0	3.406E-05	8.516E-06
57451041452	574510	4145240	0	0	0	4.052E-05	1.013E-05
57445041452	574450	4145250	0	0	0	4.983E-05	1.246E-05
57446041452	574460	4145250	0	0	0	6.485E-05	1.621E-05
57447041452	574470	4145250	0	0	0	8.703E-05	2.176E-05
57448041452	574480	4145250	0	0	0	0.0001192	2.981E-05
57446041452	574460	4145260	0	0	0	0.000164	4.101E-05
57447041452	574470	4145260	0	0	0	0.0002211	5.528E-05
57448041452	574480	4145260	0	0	0	0.0002851	7.127E-05
57447041452	574470	4145270	0	0	0	0.0003094	7.734E-05
57449041451	574490	4145130	0	0	0	0.0002944	7.36E-05
57448041451	574480	4145140	0	0	0	0.0002367	5.918E-05
57449041451	574490	4145140	0	0	0	0.0001739	4.348E-05
57449041451	574490	4145150	0	0	0	0.0001262	3.156E-05
57450041451	574500	4145150	0	0	0	9.283E-05	2.321E-05
57446041451	574460	4145160	0	0	0	2.166E-05	5.415E-06
57449041451	574490	4145160	0	0	0	2.509E-05	6.272E-06
57450041451	574500	4145160	0	0	0	2.939E-05	7.347E-06
57451041451	574510	4145160	0	0	0	3.476E-05	8.689E-06
57446041451	574460	4145170	0	0	0	4.185E-05	1.046E-05
57447041451	574470	4145170	0	0	0	0.0006505	0.0001626
57448041451	574480	4145170	0	0	0	0.0004389	0.0001097
57449041451	574490	4145170	0	0	0	0.0002655	6.637E-05
57450041451	574500	4145170	0	0	0	0.0001687	4.217E-05
57451041451	574510	4145170	0	0	0	0.0001137	2.842E-05
57452041451	574520	4145170	0	0	0	2.158E-05	5.394E-06
57446041451	574460	4145180	0	0	0	2.51E-05	6.276E-06
57447041451	574470	4145180	0	0	0	2.947E-05	7.368E-06
57448041451	574480	4145180	0	0	0	3.486E-05	8.714E-06
57449041451	574490	4145180	0	0	0	0.0023293	0.0005823
57450041451	574500	4145180	0	0	0	0.0008263	0.0002066
57451041451	574510	4145180	0	0	0	0.0003753	9.383E-05
57452041451	574520	4145180	0	0	0	0.0002149	5.373E-05
57453041451	574530	4145180	0	0	0	0.0001312	3.279E-05
57445041451	574450	4145190	0	0	0	2.175E-05	5.438E-06
57446041451	574460	4145190	0	0	0	2.491E-05	6.227E-06
57447041451	574470	4145190	0	0	0	2.923E-05	7.307E-06
57448041451	574480	4145190	0	0	0	3.499E-05	8.748E-06
57449041451	574490	4145190	0	0	0	0.0121318	0.0030329
57450041451	574500	4145190	0	0	0	0.0015046	0.0003761
57451041451	574510	4145190	0	0	0	0.0005338	0.0001335
57452041451	574520	4145190	0	0	0	0.0002672	6.68E-05
57444041452	574440	4145200	0	0	0	0.0001554	3.884E-05
57445041452	574450	4145200	0	0	0	2.156E-05	5.39E-06
57446041452	574460	4145200	0	0	0	2.477E-05	6.193E-06
57447041452	574470	4145200	0	0	0	2.902E-05	7.255E-06
57448041452	574480	4145200	0	0	0	3.444E-05	8.609E-06
57449041452	574490	4145200	0	0	0	0.0046201	0.001155
57450041452	574500	4145200	0	0	0	0.001527	0.0003817

Garvey Reservoir Rehab - Mitigated Proposed Pump Station - 3rd Trimester Start

Cancer Risk Summary & Maximum Annual GLC for Chronic Calculations

Cancer Risk Summary

323

Max Risk: 0.767723

XY	X	Y	Offroad Risk	Haul Risk	Total Risk
7451041452(	574510	4145200	0.032842629	0	0.032843
7443041452:	574430	4145210	0.017007937	0	0.017008
7444041452:	574440	4145210	0.009546701	0	0.009547
7445041452:	574450	4145210	0.001154561	0	0.001155
7446041452:	574460	4145210	0.001316398	0	0.001316
7447041452:	574470	4145210	0.001537583	0	0.001538
7448041452:	574480	4145210	0.001820591	0	0.001821
7449041452:	574490	4145210	0.070852758	0	0.070853
7450041452:	574500	4145210	0.083192168	0	0.083192
7451041452:	574510	4145210	0.05643915	0	0.056439
7443041452:	574430	4145220	0.029641345	0	0.029641
7444041452:	574440	4145220	0.016708444	0	0.016708
7445041452:	574450	4145220	0.010564704	0	0.010565
7446041452:	574460	4145220	0.00111527	0	0.001115
7447041452:	574470	4145220	0.001278206	0	0.001278
7448041452:	574480	4145220	0.001482081	0	0.001482
7449041452:	574490	4145220	0.001745306	0	0.001745
7450041452:	574500	4145220	0.021428077	0	0.021428
7451041452:	574510	4145220	0.033122889	0	0.033123
7452041452:	574520	4145220	0.03996563	0	0.039966
7453041452:	574530	4145220	0.034907211	0	0.034907
7444041452:	574440	4145230	0.024312008	0	0.024312
7445041452:	574450	4145230	0.015752537	0	0.015753
7446041452:	574460	4145230	0.010792484	0	0.010792
7447041452:	574470	4145230	0.001075429	0	0.001075
7448041452:	574480	4145230	0.001232869	0	0.001233
7449041452:	574490	4145230	0.001420534	0	0.001421
7450041452:	574500	4145230	0.001650787	0	0.001651
7451041452:	574510	4145230	0.009318646	0	0.009319
7452041452:	574520	4145230	0.013837152	0	0.013837
7444041452(	574440	4145240	0.019056034	0	0.019056
7445041452(	574450	4145240	0.022530983	0	0.022531
7446041452(	574460	4145240	0.021379444	0	0.021379
7447041452(	574470	4145240	0.017163729	0	0.017164
7448041452(	574480	4145240	0.013221954	0	0.013222
7449041452(	574490	4145240	0.009545052	0	0.009545
7450041452(	574500	4145240	0.001032841	0	0.001033
7451041452(	574510	4145240	0.001130932	0	0.001131
7445041452!	574450	4145250	0.001327663	0	0.001328
7446041452!	574460	4145250	0.001548025	0	0.001548
7447041452!	574470	4145250	0.001818118	0	0.001818
7448041452!	574480	4145250	0.003234256	0	0.003234
7446041452(	574460	4145260	0.004089049	0	0.004089
7447041452(	574470	4145260	0.005275208	0	0.005275
7448041452(	574480	4145260	0.007057607	0	0.007058
7447041452:	574470	4145270	0.009418111	0	0.009418
7449041451:	574490	4145130	0.01223967	0	0.01224
7448041451(	574480	4145140	0.014163023	0	0.014163
7449041451(	574490	4145140	0.014306176	0	0.014306
7449041451!	574490	4145150	0.012615273	0	0.012615
7450041451!	574500	4145150	0.010122882	0	0.010123
7446041451(	574460	4145160	0.007972574	0	0.007973
7449041451(	574490	4145160	0.000983658	0	0.000984
7450041451(	574500	4145160	0.00110895	0	0.001109
7451041451(	574510	4145160	0.001253202	0	0.001253
7446041451:	574460	4145170	0.001438943	0	0.001439
7447041451:	574470	4145170	0.001667272	0	0.001667
7448041451:	574480	4145170	0.001951104	0	0.001951
7449041451:	574490	4145170	0.002310771	0	0.002311
7450041451:	574500	4145170	0.00279161	0	0.002792
7451041451:	574510	4145170	0.003430987	0	0.003431
7452041451:	574520	4145170	0.004296496	0	0.004296

Max GLC for Chronic Calcs

Max GLC: 0.014082

XY	X	Y	2025	2026	2027	2034	2035
57451041452(	574510	4145200	0	0	0	0.0006024	0.0001506
57443041452:	574430	4145210	0	0	0	0.000312	7.799E-05
57444041452:	574440	4145210	0	0	0	0.0001751	4.378E-05
57445041452:	574450	4145210	0	0	0	2.118E-05	5.294E-06
57446041452:	574460	4145210	0	0	0	2.415E-05	6.037E-06
57447041452:	574470	4145210	0	0	0	2.82E-05	7.051E-06
57448041452:	574480	4145210	0	0	0	3.339E-05	8.349E-06
57449041452:	574490	4145210	0	0	0	0.0012996	0.0003249
57450041452:	574500	4145210	0	0	0	0.001526	0.0003815
57451041452:	574510	4145210	0	0	0	0.0010352	0.0002588
57443041452:	574430	4145220	0	0	0	0.0005437	0.0001359
57444041452:	574440	4145220	0	0	0	0.0003065	7.662E-05
57445041452:	574450	4145220	0	0	0	0.0001938	4.845E-05
57446041452:	574460	4145220	0	0	0	2.046E-05	5.114E-06
57447041452:	574470	4145220	0	0	0	2.345E-05	5.861E-06
57448041452:	574480	4145220	0	0	0	2.719E-05	6.796E-06
57449041452:	574490	4145220	0	0	0	3.201E-05	8.003E-06
57450041452:	574500	4145220	0	0	0	0.000393	9.826E-05
57451041452:	574510	4145220	0	0	0	0.0006076	0.0001519
57452041452:	574520	4145220	0	0	0	0.0007331	0.0001833
57453041452:	574530	4145220	0	0	0	0.0006403	0.0001601
57444041452:	574440	4145230	0	0	0	0.0004459	0.0001115
57445041452:	574450	4145230	0	0	0	0.0002889	7.224E-05
57446041452:	574460	4145230	0	0	0	0.000198	4.949E-05
57447041452:	574470	4145230	0	0	0	1.973E-05	4.932E-06
57448041452:	574480	4145230	0	0	0	2.261E-05	5.653E-06
57449041452:	574490	4145230	0	0	0	2.606E-05	6.514E-06
57450041452:	574500	4145230	0	0	0	3.028E-05	7.57E-06
57451041452:	574510	4145230	0	0	0	0.0001709	4.273E-05
57452041452:	574520	4145230	0	0	0	0.0002538	6.345E-05
57444041452(	574440	4145240	0	0	0	0.0003495	8.738E-05
57445041452(	574450	4145240	0	0	0	0.0004133	0.0001033
57446041452(	574460	4145240	0	0	0	0.0003922	9.804E-05
57447041452(	574470	4145240	0	0	0	0.0003148	7.871E-05
57448041452(	574480	4145240	0	0	0	0.0002425	6.063E-05
57449041452(	574490	4145240	0	0	0	0.0001751	4.377E-05
57450041452(	574500	4145240	0	0	0	1.894E-05	4.736E-06
57451041452(	574510	4145240	0	0	0	2.074E-05	5.186E-06
57445041452!	574450	4145250	0	0	0	2.435E-05	6.088E-06
57446041452!	574460	4145250	0	0	0	2.839E-05	7.099E-06
57447041452!	574470	4145250	0	0	0	3.335E-05	8.337E-06
57448041452!	574480	4145250	0	0	0	5.932E-05	1.483E-05
57446041452(	574460	4145260	0	0	0	7.5E-05	1.875E-05
57447041452(	574470	4145260	0	0	0	9.676E-05	2.419E-05
57448041452(	574480	4145260	0	0	0	0.0001295	3.236E-05
57447041452:	574470	4145270	0	0	0	0.0001728	4.319E-05
57449041451:	574490	4145130	0	0	0	0.0002245	5.613E-05
57448041451(	574480	4145140	0	0	0	0.0002598	6.495E-05
57449041451(	574490	4145140	0	0	0	0.0002624	6.56E-05
57449041451!	574490	4145150	0	0	0	0.0002314	5.785E-05
57450041451!	574500	4145150	0	0	0	0.0001857	4.642E-05
57446041451(	574460	4145160	0	0	0	0.0001462	3.656E-05
57449041451(	574490	4145160	0	0	0	1.804E-05	4.511E-06
57450041451(	574500	4145160	0	0	0	2.034E-05	5.085E-06
57451041451(	574510	4145160	0	0	0	2.299E-05	5.747E-06
57446041451:	574460	4145170	0	0	0	2.639E-05	6.598E-06
57447041451:	574470	4145170	0	0	0	3.058E-05	7.646E-06
57448041451:	574480	4145170	0	0	0	3.579E-05	8.947E-06
57449041451:	574490	4145170	0	0	0	4.239E-05	1.06E-05
57450041451:	574500	4145170	0	0	0	5.121E-05	1.28E-05
57451041451:	574510	4145170	0	0	0	6.293E-05	1.573E-05
57452041451:	574520	4145170	0	0	0	7.881E-05	1.97E-05

Garvey Reservoir Rehab - Mitigated Proposed Pump Station - 3rd Trimester Start

Cancer Risk Summary & Maximum Annual GLC for Chronic Calculations

Cancer Risk Summary

323

Max Risk: 0.767723

XY	X	Y	Offroad Risk	Haul Risk	Total Risk
7446041451	574460	4145180	0.005402974	0	0.005403
7447041451	574470	4145180	0.008473744	0	0.008474
7448041451	574480	4145180	0.009679137	0	0.009679
7449041451	574490	4145180	0.010001986	0	0.010002
7450041451	574500	4145180	0.009344749	0	0.009345
7451041451	574510	4145180	0.007996478	0	0.007996
7452041451	574520	4145180	0.00663392	0	0.006634
7453041451	574530	4145180	0.000939421	0	0.000939
7445041451	574450	4145190	0.001045755	0	0.001046
7446041451	574460	4145190	0.001182587	0	0.001183
7447041451	574470	4145190	0.001336456	0	0.001336
7448041451	574480	4145190	0.001518625	0	0.001519
7449041451	574490	4145190	0.001752449	0	0.001752
7450041451	574500	4145190	0.002051119	0	0.002051
7451041451	574510	4145190	0.002432492	0	0.002432
7452041451	574520	4145190	0.002914704	0	0.002915
7444041452	574440	4145200	0.003527979	0	0.003528
7445041452	574450	4145200	0.004262975	0	0.004263
7446041452	574460	4145200	0.00520844	0	0.005208
7447041452	574470	4145200	0.006156104	0	0.006156
7448041452	574480	4145200	0.006880933	0	0.006881
7449041452	574490	4145200	0.007177679	0	0.007178
7450041452	574500	4145200	0.006948251	0	0.006948
7451041452	574510	4145200	0.00628387	0	0.006284
7443041452	574430	4145210	0.005463697	0	0.005464
7444041452	574440	4145210	0.000886116	0	0.000886
7445041452	574450	4145210	0.00098668	0	0.000987
7446041452	574460	4145210	0.001095212	0	0.001095
7447041452	574470	4145210	0.001240563	0	0.001241
7448041452	574480	4145210	0.001398553	0	0.001399
7449041452	574490	4145210	0.001587591	0	0.001588
7450041452	574500	4145210	0.001835978	0	0.001836
7451041452	574510	4145210	0.002170916	0	0.002171
7443041452	574430	4145220	0.002540475	0	0.00254
7444041452	574440	4145220	0.002958667	0	0.002959
7445041452	574450	4145220	0.003469729	0	0.00347
7446041452	574460	4145220	0.004087675	0	0.004088
7447041452	574470	4145220	0.004674572	0	0.004675
7448041452	574480	4145220	0.005170798	0	0.005171
7449041452	574490	4145220	0.005429076	0	0.005429
7450041452	574500	4145220	0.005330161	0	0.00533
7451041452	574510	4145220	0.004987529	0	0.004988
7452041452	574520	4145220	0.004511637	0	0.004512
7453041452	574530	4145220	0.001712883	0	0.001713
7444041452	574440	4145230	0.001869499	0	0.001869
7445041452	574450	4145230	0.002029962	0	0.00203
7446041452	574460	4145230	0.002238783	0	0.002239
7447041452	574470	4145230	0.002422326	0	0.002422
7448041452	574480	4145230	0.002691046	0	0.002691
7449041452	574490	4145230	0.00308341	0	0.003083
7450041452	574500	4145230	0.003449946	0	0.00345
7451041452	574510	4145230	0.003979967	0	0.00398
7452041452	574520	4145230	0.004618246	0	0.004618
7444041452	574440	4145240	0.005328787	0	0.005329
7445041452	574450	4145240	0.0061605	0	0.006161
7446041452	574460	4145240	0.007101569	0	0.007102
7447041452	574470	4145240	0.008119298	0	0.008119
7448041452	574480	4145240	0.00921451	0	0.009215
7449041452	574490	4145240	0.010392152	0	0.010392
7450041452	574500	4145240	0.011508246	0	0.011508
7451041452	574510	4145240	0.0125845	0	0.012584
7445041452	574450	4145250	0.013007912	0	0.013008

Max GLC for Chronic Calcs

Max GLC: 0.014082

XY	X	Y	2025	2026	2027	2034	2035
574460414518	574460	4145180	0	0	0	9.91E-05	2.478E-05
574470414518	574470	4145180	0	0	0	0.0001554	3.886E-05
574480414518	574480	4145180	0	0	0	0.0001775	4.439E-05
574490414518	574490	4145180	0	0	0	0.0001835	4.587E-05
574500414518	574500	4145180	0	0	0	0.0001714	4.285E-05
574510414518	574510	4145180	0	0	0	0.0001467	3.667E-05
574520414518	574520	4145180	0	0	0	0.0001217	3.042E-05
574530414518	574530	4145180	0	0	0	1.723E-05	4.308E-06
574450414519	574450	4145190	0	0	0	1.918E-05	4.795E-06
574460414519	574460	4145190	0	0	0	2.169E-05	5.423E-06
574470414519	574470	4145190	0	0	0	2.451E-05	6.129E-06
574480414519	574480	4145190	0	0	0	2.786E-05	6.964E-06
574490414519	574490	4145190	0	0	0	3.214E-05	8.036E-06
574500414519	574500	4145190	0	0	0	3.762E-05	9.406E-06
574510414519	574510	4145190	0	0	0	4.462E-05	1.115E-05
574520414519	574520	4145190	0	0	0	5.346E-05	1.337E-05
574440414520	574440	4145200	0	0	0	6.471E-05	1.618E-05
574450414520	574450	4145200	0	0	0	7.819E-05	1.955E-05
574460414520	574460	4145200	0	0	0	9.554E-05	2.388E-05
574470414520	574470	4145200	0	0	0	0.0001129	2.823E-05
574480414520	574480	4145200	0	0	0	0.0001262	3.155E-05
574490414520	574490	4145200	0	0	0	0.0001317	3.291E-05
574500414520	574500	4145200	0	0	0	0.0001274	3.186E-05
574510414520	574510	4145200	0	0	0	0.0001153	2.882E-05
574430414521	574430	4145210	0	0	0	0.0001002	2.505E-05
574440414521	574440	4145210	0	0	0	1.625E-05	4.063E-06
574450414521	574450	4145210	0	0	0	1.81E-05	4.525E-06
574460414521	574460	4145210	0	0	0	2.009E-05	5.022E-06
574470414521	574470	4145210	0	0	0	2.276E-05	5.689E-06
574480414521	574480	4145210	0	0	0	2.565E-05	6.413E-06
574490414521	574490	4145210	0	0	0	2.912E-05	7.28E-06
574500414521	574500	4145210	0	0	0	3.368E-05	8.419E-06
574510414521	574510	4145210	0	0	0	3.982E-05	9.955E-06
574430414522	574430	4145220	0	0	0	4.66E-05	1.165E-05
574440414522	574440	4145220	0	0	0	5.427E-05	1.357E-05
574450414522	574450	4145220	0	0	0	6.364E-05	1.591E-05
574460414522	574460	4145220	0	0	0	7.498E-05	1.874E-05
574470414522	574470	4145220	0	0	0	8.574E-05	2.144E-05
574480414522	574480	4145220	0	0	0	9.485E-05	2.371E-05
574490414522	574490	4145220	0	0	0	9.958E-05	2.49E-05
574500414522	574500	4145220	0	0	0	9.777E-05	2.444E-05
574510414522	574510	4145220	0	0	0	9.148E-05	2.287E-05
574520414522	574520	4145220	0	0	0	8.275E-05	2.069E-05
574530414522	574530	4145220	0	0	0	3.142E-05	7.855E-06
574440414523	574440	4145230	0	0	0	3.429E-05	8.573E-06
574450414523	574450	4145230	0	0	0	3.723E-05	9.309E-06
574460414523	574460	4145230	0	0	0	4.107E-05	1.027E-05
574470414523	574470	4145230	0	0	0	4.443E-05	1.111E-05
574480414523	574480	4145230	0	0	0	4.936E-05	1.234E-05
574490414523	574490	4145230	0	0	0	5.656E-05	1.414E-05
574500414523	574500	4145230	0	0	0	6.328E-05	1.582E-05
574510414523	574510	4145230	0	0	0	7.3E-05	1.825E-05
574520414523	574520	4145230	0	0	0	8.471E-05	2.118E-05
574440414524	574440	4145240	0	0	0	9.774E-05	2.444E-05
574450414524	574450	4145240	0	0	0	0.000113	2.825E-05
574460414524	574460	4145240	0	0	0	0.0001303	3.257E-05
574470414524	574470	4145240	0	0	0	0.0001489	3.723E-05
574480414524	574480	4145240	0	0	0	0.000169	4.225E-05
574490414524	574490	4145240	0	0	0	0.0001906	4.765E-05
574500414524	574500	4145240	0	0	0	0.0002111	5.277E-05
574510414524	574510	4145240	0	0	0	0.0002308	5.771E-05
574450414525	574450	4145250	0	0	0	0.0002386	5.965E-05

Garvey Reservoir Rehab - Mitigated Proposed Pump Station - 3rd Trimester Start

Cancer Risk Summary & Maximum Annual GLC for Chronic Calculations

Cancer Risk Summary

323

Max Risk: 0.767723

XY	X	Y	Offroad Risk	Haul Risk	Total Risk
7446041452	574460	4145250	0.012977688	0	0.012978
7447041452	574470	4145250	0.012690834	0	0.012691
7448041452	574480	4145250	0.012410574	0	0.012411
7446041452	574460	4145260	0.011448622	0	0.011449
7447041452	574470	4145260	0.001738711	0	0.001739
7448041452	574480	4145260	0.001891206	0	0.001891
7447041452	574470	4145270	0.002057438	0	0.002057
7449041451	574490	4145130	0.002248675	0	0.002249
7448041451	574480	4145140	0.002491841	0	0.002492
7449041451	574490	4145140	0.002800127	0	0.0028
7449041451	574490	4145150	0.003216671	0	0.003217
7450041451	574500	4145150	0.003660141	0	0.00366
7446041451	574460	4145160	0.004242642	0	0.004243
7449041451	574490	4145160	0.004943018	0	0.004943
7450041451	574500	4145160	0.005786545	0	0.005787
7451041451	574510	4145160	0.006842191	0	0.006842
7446041451	574460	4145170	0.008090448	0	0.00809
7447041451	574470	4145170	0.009532963	0	0.009533
7448041451	574480	4145170	0.011174682	0	0.011175
7449041451	574490	4145170	0.013020551	0	0.013021
7450041451	574500	4145170	0.014915604	0	0.014916
7451041451	574510	4145170	0.016945016	0	0.016945
7452041451	574520	4145170	0.018164147	0	0.018164
7446041451	574460	4145180	0.018305651	0	0.018306
7447041451	574470	4145180	0.017750901	0	0.017751
7448041451	574480	4145180	0.01715686	0	0.017157
7449041451	574490	4145180	0.015405234	0	0.015405
7450041451	574500	4145180	0.001759593	0	0.00176
7451041451	574510	4145180	0.001922254	0	0.001922
7452041451	574520	4145180	0.002077496	0	0.002077
7453041451	574530	4145180	0.002292912	0	0.002293
7445041451	574450	4145190	0.002553663	0	0.002554
7446041451	574460	4145190	0.002935861	0	0.002936
7447041451	574470	4145190	0.003346634	0	0.003347
7448041451	574480	4145190	0.003841211	0	0.003841
7449041451	574490	4145190	0.004462454	0	0.004462
7450041451	574500	4145190	0.005243061	0	0.005243
7451041451	574510	4145190	0.006222047	0	0.006222
7452041451	574520	4145190	0.007495032	0	0.007495
7444041452	574440	4145200	0.009097735	0	0.009098
7445041452	574450	4145200	0.011031255	0	0.011031
7446041452	574460	4145200	0.013375822	0	0.013376
7447041452	574470	4145200	0.016484236	0	0.016484
7448041452	574480	4145200	0.020200978	0	0.020201
7449041452	574490	4145200	0.02388997	0	0.02389
7450041452	574500	4145200	0.026827205	0	0.026827
7451041452	574510	4145200	0.027802619	0	0.027803
7443041452	574430	4145210	0.024487583	0	0.024488
7444041452	574440	4145210	0.021666299	0	0.021666
7445041452	574450	4145210	0.001773057	0	0.001773
7446041452	574460	4145210	0.001912912	0	0.001913
7447041452	574470	4145210	0.0021025	0	0.002102
7448041452	574480	4145210	0.002344018	0	0.002344
7449041452	574490	4145210	0.03962657	0	0.039627
7450041452	574500	4145210	0.03205268	0	0.032053
7451041452	574510	4145210	0.0017813	0	0.001781
7443041452	574430	4145220	0.001924727	0	0.001925
7444041452	574440	4145220	0.00212503	0	0.002125
7445041452	574450	4145220	0.07029059	0	0.070291
7446041452	574460	4145220	0.049707963	0	0.049708
7447041452	574470	4145220	0.001768111	0	0.001768
7448041452	574480	4145220	0.001933245	0	0.001933

Max GLC for Chronic Calcs

Max GLC: 0.014082

XY	X	Y	2025	2026	2027	2034	2035
57446041452	574460	4145250	0	0	0	0.000238	5.951E-05
57447041452	574470	4145250	0	0	0	0.0002328	5.82E-05
57448041452	574480	4145250	0	0	0	0.0002276	5.691E-05
57446041452	574460	4145260	0	0	0	0.00021	5.25E-05
57447041452	574470	4145260	0	0	0	3.189E-05	7.973E-06
57448041452	574480	4145260	0	0	0	3.469E-05	8.672E-06
57447041452	574470	4145270	0	0	0	3.774E-05	9.435E-06
57449041451	574490	4145130	0	0	0	4.125E-05	1.031E-05
57448041451	574480	4145140	0	0	0	4.571E-05	1.143E-05
57449041451	574490	4145140	0	0	0	5.136E-05	1.284E-05
57449041451	574490	4145150	0	0	0	5.9E-05	1.475E-05
57450041451	574500	4145150	0	0	0	6.714E-05	1.678E-05
57446041451	574460	4145160	0	0	0	7.782E-05	1.946E-05
57449041451	574490	4145160	0	0	0	9.067E-05	2.267E-05
57450041451	574500	4145160	0	0	0	0.0001061	2.654E-05
57451041451	574510	4145160	0	0	0	0.0001255	3.138E-05
57446041451	574460	4145170	0	0	0	0.0001484	3.71E-05
57447041451	574470	4145170	0	0	0	0.0001749	4.371E-05
57448041451	574480	4145170	0	0	0	0.000205	5.124E-05
57449041451	574490	4145170	0	0	0	0.0002388	5.971E-05
57450041451	574500	4145170	0	0	0	0.0002736	6.84E-05
57451041451	574510	4145170	0	0	0	0.0003108	7.77E-05
57452041451	574520	4145170	0	0	0	0.0003332	8.329E-05
57446041451	574460	4145180	0	0	0	0.0003358	8.394E-05
57447041451	574470	4145180	0	0	0	0.0003256	8.14E-05
57448041451	574480	4145180	0	0	0	0.0003147	7.868E-05
57449041451	574490	4145180	0	0	0	0.0002826	7.064E-05
57450041451	574500	4145180	0	0	0	3.228E-05	8.069E-06
57451041451	574510	4145180	0	0	0	3.526E-05	8.815E-06
57452041451	574520	4145180	0	0	0	3.811E-05	9.527E-06
57453041451	574530	4145180	0	0	0	4.206E-05	1.051E-05
57445041451	574450	4145190	0	0	0	4.684E-05	1.171E-05
57446041451	574460	4145190	0	0	0	5.385E-05	1.346E-05
57447041451	574470	4145190	0	0	0	6.139E-05	1.535E-05
57448041451	574480	4145190	0	0	0	7.046E-05	1.761E-05
57449041451	574490	4145190	0	0	0	8.185E-05	2.046E-05
57450041451	574500	4145190	0	0	0	9.617E-05	2.404E-05
57451041451	574510	4145190	0	0	0	0.0001141	2.853E-05
57452041451	574520	4145190	0	0	0	0.0001375	3.437E-05
57444041452	574440	4145200	0	0	0	0.0001669	4.172E-05
57445041452	574450	4145200	0	0	0	0.0002023	5.059E-05
57446041452	574460	4145200	0	0	0	0.0002453	6.134E-05
57447041452	574470	4145200	0	0	0	0.0003024	7.559E-05
57448041452	574480	4145200	0	0	0	0.0003705	9.263E-05
57449041452	574490	4145200	0	0	0	0.0004382	0.0001096
57450041452	574500	4145200	0	0	0	0.0004921	0.000123
57451041452	574510	4145200	0	0	0	0.00051	0.0001275
57443041452	574430	4145210	0	0	0	0.0004492	0.0001123
57444041452	574440	4145210	0	0	0	0.0003974	9.935E-05
57445041452	574450	4145210	0	0	0	3.252E-05	8.131E-06
57446041452	574460	4145210	0	0	0	3.509E-05	8.772E-06
57447041452	574470	4145210	0	0	0	3.857E-05	9.641E-06
57448041452	574480	4145210	0	0	0	4.3E-05	1.075E-05
57449041452	574490	4145210	0	0	0	0.0007269	0.0001817
57450041452	574500	4145210	0	0	0	0.0005879	0.000147
57451041452	574510	4145210	0	0	0	3.267E-05	8.168E-06
57443041452	574430	4145220	0	0	0	3.53E-05	8.826E-06
57444041452	574440	4145220	0	0	0	3.898E-05	9.745E-06
57445041452	574450	4145220	0	0	0	0.0012893	0.0003223
57446041452	574460	4145220	0	0	0	0.0009118	0.0002279
57447041452	574470	4145220	0	0	0	3.243E-05	8.108E-06
57448041452	574480	4145220	0	0	0	3.546E-05	8.865E-06

Garvey Reservoir Rehab - Mitigated Proposed Pump Station - 3rd Trimester Start

Cancer Risk Summary & Maximum Annual GLC for Chronic Calculations

Cancer Risk Summary

323

Max Risk: 0.767723

XY	X	Y	Offroad Risk	Haul Risk	Total Risk
7449041452	574490	4145220	0.132388794	0	0.132389
7450041452	574500	4145220	0.074964338	0	0.074964
7451041452	574510	4145220	0.001766188	0	0.001766
7452041452	574520	4145220	0.00193874	0	0.001939
7453041452	574530	4145220	0.321547279	0	0.321547
7444041452	574440	4145230	0.123770798	0	0.123771
7445041452	574450	4145230	0.001762891	0	0.001763
7446041452	574460	4145230	0.00193819	0	0.001938
7447041452	574470	4145230	0.528053036	0	0.528053
7448041452	574480	4145230	0.159673482	0	0.159673
7449041452	574490	4145230	0.001768935	0	0.001769
7450041452	574500	4145230	0.001923628	0	0.001924
7451041452	574510	4145230	0.767723172	0	0.767723
7452041452	574520	4145230	0.364209725	0	0.36421
7444041452	574440	4145240	0.15747921	0	0.157479
7445041452	574450	4145240	0.001748328	0	0.001748
7446041452	574460	4145240	0.001902471	0	0.001902
7447041452	574470	4145240	0.205856488	0	0.205856
7448041452	574480	4145240	0.238449356	0	0.238449
7449041452	574490	4145240	0.203143736	0	0.203144
7450041452	574500	4145240	0.126245329	0	0.126245
7451041452	574510	4145240	0.0017225	0	0.001723
7445041452	574450	4145250	0.001874445	0	0.001874
7446041452	574460	4145250	0.109648715	0	0.109649
7447041452	574470	4145250	0.114120236	0	0.11412
7448041452	574480	4145250	0.105937467	0	0.105937
7446041452	574460	4145260	0.082914106	0	0.082914
7447041452	574470	4145260	0.001689254	0	0.001689
7448041452	574480	4145260	0.001840924	0	0.001841
7447041452	574470	4145270	0.04998575	0	0.049986
7457041450	574570	4145030	0.066327933	0	0.066328
7463041450	574630	4145080	0.078339548	0	0.07834
7461041450	574610	4145090	0.077295167	0	0.077295
7462041450	574620	4145090	0.064993125	0	0.064993
7463041450	574630	4145090	0.001658755	0	0.001659
7464041450	574640	4145090	0.001803006	0	0.001803
7460041451	574600	4145100	0.001980779	0	0.001981
7461041451	574610	4145100	0.027122577	0	0.027123
7462041451	574620	4145100	0.035515815	0	0.035516
7463041451	574630	4145100	0.044321475	0	0.044321
7464041451	574640	4145100	0.051132893	0	0.051133
7465041451	574650	4145100	0.052569363	0	0.052569
7459041451	574590	4145110	0.048504494	0	0.048504
7460041451	574600	4145110	0.001620013	0	0.00162
7461041451	574610	4145110	0.001759319	0	0.001759
7462041451	574620	4145110	0.001926376	0	0.001926
7463041451	574630	4145110	0.016705971	0	0.016706
7464041451	574640	4145110	0.021108801	0	0.021109
7465041451	574650	4145110	0.026369721	0	0.02637
7466041451	574660	4145110	0.031651249	0	0.031651
7460041451	574600	4145120	0.035631491	0	0.035631
7461041451	574610	4145120	0.037044057	0	0.037044
7462041451	574620	4145120	0.035398216	0	0.035398
7463041451	574630	4145120	0.001584843	0	0.001585
7464041451	574640	4145120	0.001712609	0	0.001713
7465041451	574650	4145120	0.001867851	0	0.001868
7466041451	574660	4145120	0.010956519	0	0.010957
7460041451	574600	4145130	0.013734665	0	0.013735
7462041451	574620	4145130	0.016772464	0	0.016772
7463041451	574630	4145130	0.020300993	0	0.020301
7464041451	574640	4145130	0.023812211	0	0.023812
7465041451	574650	4145130	0.026597501	0	0.026598

Max GLC for Chronic Calcs

Max GLC: 0.014082

XY	X	Y	2025	2026	2027	2034	2035
57449041452	574490	4145220	0	0	0	0.0024283	0.0006071
57450041452	574500	4145220	0	0	0	0.001375	0.0003438
57451041452	574510	4145220	0	0	0	3.24E-05	8.099E-06
57452041452	574520	4145220	0	0	0	3.556E-05	8.89E-06
57453041452	574530	4145220	0	0	0	0.005898	0.0014745
57444041452	574440	4145230	0	0	0	0.0022703	0.0005676
57445041452	574450	4145230	0	0	0	3.234E-05	8.084E-06
57446041452	574460	4145230	0	0	0	3.555E-05	8.888E-06
57447041452	574470	4145230	0	0	0	0.0096858	0.0024215
57448041452	574480	4145230	0	0	0	0.0029288	0.0007322
57449041452	574490	4145230	0	0	0	3.245E-05	8.112E-06
57450041452	574500	4145230	0	0	0	3.528E-05	8.821E-06
57451041452	574510	4145230	0	0	0	0.014082	0.0035205
57452041452	574520	4145230	0	0	0	0.0066805	0.0016701
57444041452	574440	4145240	0	0	0	0.0028886	0.0007221
57445041452	574450	4145240	0	0	0	3.207E-05	8.017E-06
57446041452	574460	4145240	0	0	0	3.49E-05	8.724E-06
57447041452	574470	4145240	0	0	0	0.0037759	0.000944
57448041452	574480	4145240	0	0	0	0.0043738	0.0010934
57449041452	574490	4145240	0	0	0	0.0037262	0.0009315
57450041452	574500	4145240	0	0	0	0.0023157	0.0005789
57451041452	574510	4145240	0	0	0	3.16E-05	7.899E-06
57445041452	574450	4145250	0	0	0	3.438E-05	8.596E-06
57446041452	574460	4145250	0	0	0	0.0020112	0.0005028
57447041452	574470	4145250	0	0	0	0.0020933	0.0005233
57448041452	574480	4145250	0	0	0	0.0019432	0.0004858
57446041452	574460	4145260	0	0	0	0.0015209	0.0003802
57447041452	574470	4145260	0	0	0	3.099E-05	7.746E-06
57448041452	574480	4145260	0	0	0	3.377E-05	8.442E-06
57447041452	574470	4145270	0	0	0	0.0009169	0.0002292
57457041450	574570	4145030	0	0	0	0.0012166	0.0003042
57463041450	574630	4145080	0	0	0	0.0014369	0.0003592
57461041450	574610	4145090	0	0	0	0.0014178	0.0003544
57462041450	574620	4145090	0	0	0	0.0011921	0.000298
57463041450	574630	4145090	0	0	0	3.043E-05	7.606E-06
57464041450	574640	4145090	0	0	0	3.307E-05	8.268E-06
57460041451	574600	4145100	0	0	0	3.633E-05	9.083E-06
57461041451	574610	4145100	0	0	0	0.0004975	0.0001244
57462041451	574620	4145100	0	0	0	0.0006515	0.0001629
57463041451	574630	4145100	0	0	0	0.000813	0.0002032
57464041451	574640	4145100	0	0	0	0.0009379	0.0002345
57465041451	574650	4145100	0	0	0	0.0009643	0.0002411
57459041451	574590	4145110	0	0	0	0.0008897	0.0002224
57460041451	574600	4145110	0	0	0	2.972E-05	7.429E-06
57461041451	574610	4145110	0	0	0	3.227E-05	8.068E-06
57462041451	574620	4145110	0	0	0	3.533E-05	8.834E-06
57463041451	574630	4145110	0	0	0	0.0003064	7.661E-05
57464041451	574640	4145110	0	0	0	0.0003872	9.68E-05
57465041451	574650	4145110	0	0	0	0.0004837	0.0001209
57466041451	574660	4145110	0	0	0	0.0005806	0.0001451
57460041451	574600	4145120	0	0	0	0.0006536	0.0001634
57461041451	574610	4145120	0	0	0	0.0006795	0.0001699
57462041451	574620	4145120	0	0	0	0.0006493	0.0001623
57463041451	574630	4145120	0	0	0	2.907E-05	7.268E-06
57464041451	574640	4145120	0	0	0	3.141E-05	7.853E-06
57465041451	574650	4145120	0	0	0	3.426E-05	8.565E-06
57466041451	574660	4145120	0	0	0	0.000201	5.024E-05
57460041451	574600	4145130	0	0	0	0.0002519	6.298E-05
57462041451	574620	4145130	0	0	0	0.0003076	7.691E-05
57463041451	574630	4145130	0	0	0	0.0003724	9.309E-05
57464041451	574640	4145130	0	0	0	0.0004368	0.0001092
57465041451	574650	4145130	0	0	0	0.0004879	0.000122

Garvey Reservoir Rehab - Mitigated Proposed Pump Station - 3rd Trimester Start

Cancer Risk Summary & Maximum Annual GLC for Chronic Calculations

Cancer Risk Summary

323

Max Risk: 0.767723

XY	X	Y	Offroad Risk	Haul Risk	Total Risk
74630414514	574630	4145140	0.027630342	0	0.02763
74640414514	574640	4145140	0.026969258	0	0.026969
74590414515	574590	4145150	0.001539782	0	0.00154
74600414515	574600	4145150	0.001661228	0	0.001661
74600414516	574600	4145160	0.001807677	0	0.001808
74610414516	574610	4145160	0.006558359	0	0.006558
74610414517	574610	4145170	0.007744519	0	0.007745
74570414503	574570	4145030	0.009301336	0	0.009301
74630414508	574630	4145080	0.01129338	0	0.011293
74610414509	574610	4145090	0.013607724	0	0.013608
74620414509	574620	4145090	0.016028126	0	0.016028
74630414509	574630	4145090	0.018390828	0	0.018391
74640414509	574640	4145090	0.02030374	0	0.020304
74600414510	574600	4145100	0.021384939	0	0.021385
74610414510	574610	4145100	0.021323392	0	0.021323
74620414510	574620	4145100	0.001493346	0	0.001493
74630414510	574630	4145100	0.001609297	0	0.001609
74640414510	574640	4145100	0.001743932	0	0.001744
74650414510	574650	4145100	0.001904669	0	0.001905
74590414511	574590	4145110	0.005073256	0	0.005073
74600414511	574600	4145110	0.005865952	0	0.005866
74610414511	574610	4145110	0.006819936	0	0.00682
74620414511	574620	4145110	0.008031098	0	0.008031
74630414511	574630	4145110	0.0094596	0	0.00946
74640414511	574640	4145110	0.011236504	0	0.011237
74650414511	574650	4145110	0.012959279	0	0.012959
74660414511	574660	4145110	0.014623804	0	0.014624
74600414512	574600	4145120	0.015973448	0	0.015973
74610414512	574610	4145120	0.016844727	0	0.016845
74620414512	574620	4145120	0.017020302	0	0.01702
74630414512	574630	4145120	0.001447735	0	0.001448
74640414512	574640	4145120	0.001555443	0	0.001555
74650414512	574650	4145120	0.001683484	0	0.001683
74660414512	574660	4145120	0.001826361	0	0.001826
74600414513	574600	4145130	0.001988472	0	0.001988
74620414513	574620	4145130	0.002910583	0	0.002911
74630414513	574630	4145130	0.003245246	0	0.003245
74640414513	574640	4145130	0.003615354	0	0.003615
74650414513	574650	4145130	0.004095643	0	0.004096
74630414514	574630	4145140	0.004649569	0	0.00465
74640414514	574640	4145140	0.00527301	0	0.005273
74590414515	574590	4145150	0.006079719	0	0.00608
74600414515	574600	4145150	0.007011447	0	0.007011
74600414516	574600	4145160	0.008062147	0	0.008062
74610414516	574610	4145160	0.009254901	0	0.009255
74610414517	574610	4145170	0.010675434	0	0.010675
74570414503	574570	4145030	0.01188907	0	0.011889
74630414508	574630	4145080	0.012887565	0	0.012888
74610414509	574610	4145090	0.013577225	0	0.013577
74620414509	574620	4145090	0.013815995	0	0.013816
74630414509	574630	4145090	0.001400751	0	0.001401
74640414509	574640	4145090	0.001499116	0	0.001499
74600414510	574600	4145100	0.001618914	0	0.001619
74610414510	574610	4145100	0.001749152	0	0.001749
74620414510	574620	4145100	0.001896426	0	0.001896
74630414510	574630	4145100	0.002064033	0	0.002064
74640414510	574640	4145100	0.002255818	0	0.002256
74650414510	574650	4145100	0.002473432	0	0.002473
74590414511	574590	4145110	0.002727315	0	0.002727
74600414511	574600	4145110	0.003016093	0	0.003016
74610414511	574610	4145110	0.003349932	0	0.00335
74620414511	574620	4145110	0.003756034	0	0.003756

Max GLC for Chronic Calcs

Max GLC: 0.014082

XY	X	Y	2025	2026	2027	2034	2035
57463041451	574630	4145140	0	0	0	0.0005068	0.0001267
57464041451	574640	4145140	0	0	0	0.0004947	0.0001237
57459041451	574590	4145150	0	0	0	2.824E-05	7.061E-06
57460041451	574600	4145150	0	0	0	3.047E-05	7.618E-06
57460041451	574600	4145160	0	0	0	3.316E-05	8.289E-06
57461041451	574610	4145160	0	0	0	0.0001203	3.007E-05
57461041451	574610	4145170	0	0	0	0.0001421	3.551E-05
57457041450	574570	4145030	0	0	0	0.0001706	4.265E-05
57463041450	574630	4145080	0	0	0	0.0002071	5.179E-05
57461041450	574610	4145090	0	0	0	0.0002496	6.24E-05
57462041450	574620	4145090	0	0	0	0.000294	7.35E-05
57463041450	574630	4145090	0	0	0	0.0003373	8.433E-05
57464041450	574640	4145090	0	0	0	0.0003724	9.311E-05
57460041451	574600	4145100	0	0	0	0.0003923	9.806E-05
57461041451	574610	4145100	0	0	0	0.0003911	9.778E-05
57462041451	574620	4145100	0	0	0	2.739E-05	6.848E-06
57463041451	574630	4145100	0	0	0	2.952E-05	7.38E-06
57464041451	574640	4145100	0	0	0	3.199E-05	7.997E-06
57465041451	574650	4145100	0	0	0	3.494E-05	8.734E-06
57459041451	574590	4145110	0	0	0	9.306E-05	2.326E-05
57460041451	574600	4145110	0	0	0	0.0001076	2.69E-05
57461041451	574610	4145110	0	0	0	0.0001251	3.127E-05
57462041451	574620	4145110	0	0	0	0.0001473	3.683E-05
57463041451	574630	4145110	0	0	0	0.0001735	4.338E-05
57464041451	574640	4145110	0	0	0	0.0002061	5.153E-05
57465041451	574650	4145110	0	0	0	0.0002377	5.943E-05
57466041451	574660	4145110	0	0	0	0.0002682	6.706E-05
57460041451	574600	4145120	0	0	0	0.000293	7.325E-05
57461041451	574610	4145120	0	0	0	0.000309	7.724E-05
57462041451	574620	4145120	0	0	0	0.0003122	7.805E-05
57463041451	574630	4145120	0	0	0	2.656E-05	6.639E-06
57464041451	574640	4145120	0	0	0	2.853E-05	7.133E-06
57465041451	574650	4145120	0	0	0	3.088E-05	7.72E-06
57466041451	574660	4145120	0	0	0	3.35E-05	8.375E-06
57460041451	574600	4145130	0	0	0	3.647E-05	9.118E-06
57462041451	574620	4145130	0	0	0	5.339E-05	1.335E-05
57463041451	574630	4145130	0	0	0	5.953E-05	1.488E-05
57464041451	574640	4145130	0	0	0	6.631E-05	1.658E-05
57465041451	574650	4145130	0	0	0	7.512E-05	1.878E-05
57463041451	574630	4145140	0	0	0	8.528E-05	2.132E-05
57464041451	574640	4145140	0	0	0	9.672E-05	2.418E-05
57459041451	574590	4145150	0	0	0	0.0001115	2.788E-05
57460041451	574600	4145150	0	0	0	0.0001286	3.215E-05
57460041451	574600	4145160	0	0	0	0.0001479	3.697E-05
57461041451	574610	4145160	0	0	0	0.0001698	4.244E-05
57461041451	574610	4145170	0	0	0	0.0001958	4.895E-05
57457041450	574570	4145030	0	0	0	0.0002181	5.452E-05
57463041450	574630	4145080	0	0	0	0.0002364	5.91E-05
57461041450	574610	4145090	0	0	0	0.000249	6.226E-05
57462041450	574620	4145090	0	0	0	0.0002534	6.336E-05
57463041450	574630	4145090	0	0	0	2.569E-05	6.423E-06
57464041450	574640	4145090	0	0	0	2.75E-05	6.874E-06
57460041451	574600	4145100	0	0	0	2.97E-05	7.424E-06
57461041451	574610	4145100	0	0	0	3.208E-05	8.021E-06
57462041451	574620	4145100	0	0	0	3.479E-05	8.696E-06
57463041451	574630	4145100	0	0	0	3.786E-05	9.465E-06
57464041451	574640	4145100	0	0	0	4.138E-05	1.034E-05
57465041451	574650	4145100	0	0	0	4.537E-05	1.134E-05
57459041451	574590	4145110	0	0	0	5.003E-05	1.251E-05
57460041451	574600	4145110	0	0	0	5.532E-05	1.383E-05
57461041451	574610	4145110	0	0	0	6.145E-05	1.536E-05
57462041451	574620	4145110	0	0	0	6.89E-05	1.722E-05

Garvey Reservoir Rehab - Mitigated Proposed Pump Station - 3rd Trimester Start

Cancer Risk Summary & Maximum Annual GLC for Chronic Calculations

Cancer Risk Summary

323

Max Risk: 0.767723

XY	X	Y	Offroad Risk	Haul Risk	Total Risk
7463041451	574630	4145110	0.004219562	0	0.00422
7464041451	574640	4145110	0.004731998	0	0.004732
7465041451	574650	4145110	0.005286748	0	0.005287
7466041451	574660	4145110	0.006101151	0	0.006101
7460041451	574600	4145120	0.006941931	0	0.006942
7461041451	574610	4145120	0.007889869	0	0.00789
7462041451	574620	4145120	0.008913368	0	0.008913
7463041451	574630	4145120	0.009825037	0	0.009825
7464041451	574640	4145120	0.010635868	0	0.010636
7465041451	574650	4145120	0.011161218	0	0.011161
7466041451	574660	4145120	0.011415101	0	0.011415
7460041451	574600	4145130	0.001346622	0	0.001347
7462041451	574620	4145130	0.001443064	0	0.001443
7463041451	574630	4145130	0.001548574	0	0.001549
7464041451	574640	4145130	0.00167057	0	0.001671
7465041451	574650	4145130	0.001802457	0	0.001802
7463041451	574630	4145140	0.001954402	0	0.001954
7464041451	574640	4145140	0.002121733	0	0.002122
7459041451	574590	4145150	0.002314618	0	0.002315
7460041451	574600	4145150	0.002536079	0	0.002536
7460041451	574600	4145160	0.002795731	0	0.002796
7461041451	574610	4145160	0.003088356	0	0.003088
7461041451	574610	4145170	0.00342769	0	0.003428
7457041450	574570	4145030	0.003822252	0	0.003822
7463041450	574630	4145080	0.004282483	0	0.004282
7461041450	574610	4145090	0.00471826	0	0.004718
7462041450	574620	4145090	0.005357912	0	0.005358
7463041450	574630	4145090	0.006054716	0	0.006055
7464041450	574640	4145090	0.006778171	0	0.006778
7460041451	574600	4145100	0.007545314	0	0.007545
7461041451	574610	4145100	0.008280585	0	0.008281
7462041451	574620	4145100	0.008901828	0	0.008902
7463041451	574630	4145100	0.009362883	0	0.009363
7464041451	574640	4145100	0.009605775	0	0.009606
7465041451	574650	4145100	0	0	0
7459041451	574590	4145110	0	0	0
7460041451	574600	4145110	0	0	0
7461041451	574610	4145110	0	0	0
7462041451	574620	4145110	0	0	0
7463041451	574630	4145110	0	0	0
7464041451	574640	4145110	0	0	0
7465041451	574650	4145110	0	0	0
7466041451	574660	4145110	0	0	0
7460041451	574600	4145120	0	0	0
7461041451	574610	4145120	0	0	0
7462041451	574620	4145120	0	0	0
7463041451	574630	4145120	0	0	0
7464041451	574640	4145120	0	0	0
7465041451	574650	4145120	0	0	0
7466041451	574660	4145120	0	0	0
7460041451	574600	4145130	0	0	0
7462041451	574620	4145130	0	0	0
7463041451	574630	4145130	0	0	0
7464041451	574640	4145130	0	0	0
7465041451	574650	4145130	0	0	0
7463041451	574630	4145140	0	0	0
7464041451	574640	4145140	0	0	0
7459041451	574590	4145150	0	0	0
7460041451	574600	4145150	0	0	0
7460041451	574600	4145160	0	0	0
7461041451	574610	4145160	0	0	0
7461041451	574610	4145170	0	0	0

Max GLC for Chronic Calcs

Max GLC: 0.014082

XY	X	Y	2025	2026	2027	2034	2035
57463041451	574630	4145110	0	0	0	7.74E-05	1.935E-05
57464041451	574640	4145110	0	0	0	8.68E-05	2.17E-05
57465041451	574650	4145110	0	0	0	9.697E-05	2.424E-05
57466041451	574660	4145110	0	0	0	0.0001119	2.798E-05
57460041451	574600	4145120	0	0	0	0.0001273	3.183E-05
57461041451	574610	4145120	0	0	0	0.0001447	3.618E-05
57462041451	574620	4145120	0	0	0	0.0001635	4.087E-05
57463041451	574630	4145120	0	0	0	0.0001802	4.505E-05
57464041451	574640	4145120	0	0	0	0.0001951	4.877E-05
57465041451	574650	4145120	0	0	0	0.0002047	5.118E-05
57466041451	574660	4145120	0	0	0	0.0002094	5.235E-05
57460041451	574600	4145130	0	0	0	2.47E-05	6.175E-06
57462041451	574620	4145130	0	0	0	2.647E-05	6.617E-06
57463041451	574630	4145130	0	0	0	2.84E-05	7.101E-06
57464041451	574640	4145130	0	0	0	3.064E-05	7.661E-06
57465041451	574650	4145130	0	0	0	3.306E-05	8.265E-06
57463041451	574630	4145140	0	0	0	3.585E-05	8.962E-06
57464041451	574640	4145140	0	0	0	3.892E-05	9.73E-06
57459041451	574590	4145150	0	0	0	4.246E-05	1.061E-05
57460041451	574600	4145150	0	0	0	4.652E-05	1.163E-05
57460041451	574600	4145160	0	0	0	5.128E-05	1.282E-05
57461041451	574610	4145160	0	0	0	5.665E-05	1.416E-05
57461041451	574610	4145170	0	0	0	6.287E-05	1.572E-05
57457041450	574570	4145030	0	0	0	7.011E-05	1.753E-05
57463041450	574630	4145080	0	0	0	7.855E-05	1.964E-05
57461041450	574610	4145090	0	0	0	8.654E-05	2.164E-05
57462041450	574620	4145090	0	0	0	9.828E-05	2.457E-05
57463041450	574630	4145090	0	0	0	0.0001111	2.776E-05
57464041450	574640	4145090	0	0	0	0.0001243	3.108E-05
57460041451	574600	4145100	0	0	0	0.0001384	3.46E-05
57461041451	574610	4145100	0	0	0	0.0001519	3.797E-05
57462041451	574620	4145100	0	0	0	0.0001633	4.082E-05
57463041451	574630	4145100	0	0	0	0.0001717	4.293E-05
57464041451	574640	4145100	0	0	0	0.0001762	4.405E-05
57465041451	574650	4145100	0	0	0	0	0
57459041451	574590	4145110	0	0	0	0	0
57460041451	574600	4145110	0	0	0	0	0
57461041451	574610	4145110	0	0	0	0	0
57462041451	574620	4145110	0	0	0	0	0
57463041451	574630	4145110	0	0	0	0	0
57464041451	574640	4145110	0	0	0	0	0
57465041451	574650	4145110	0	0	0	0	0
57466041451	574660	4145110	0	0	0	0	0
57460041451	574600	4145120	0	0	0	0	0
57461041451	574610	4145120	0	0	0	0	0
57462041451	574620	4145120	0	0	0	0	0
57463041451	574630	4145120	0	0	0	0	0
57464041451	574640	4145120	0	0	0	0	0
57465041451	574650	4145120	0	0	0	0	0
57466041451	574660	4145120	0	0	0	0	0
57460041451	574600	4145130	0	0	0	0	0
57462041451	574620	4145130	0	0	0	0	0
57463041451	574630	4145130	0	0	0	0	0
57464041451	574640	4145130	0	0	0	0	0
57465041451	574650	4145130	0	0	0	0	0
57463041451	574630	4145140	0	0	0	0	0
57464041451	574640	4145140	0	0	0	0	0
57459041451	574590	4145150	0	0	0	0	0
57460041451	574600	4145150	0	0	0	0	0
57460041451	574600	4145160	0	0	0	0	0
57461041451	574610	4145160	0	0	0	0	0
57461041451	574610	4145170	0	0	0	0	0

Garvey Reservoir Rehab - Mitigated Proposed Pump Station - 3rd Trimester Start

Construction Modeling Assumptions

AERMOD Sources

Volume Sources		
Offroad Construction Exhaust		
Release Height	3.66	m
Emissions rate	1	g/s
Init Vert Dimension	3.4	m
Line Volume		
Onroad Hauling Exhaust		
Plume Height	7.315	m
Plume Width	20	m
Release Height	3.66	m
Emissions rate	1	g/s

Meteorology:

SCAQMD	Pico	Rivera	2010 - 2012, 2015 - 2016

SCAQMD Met Data

https://www.aqmd.gov/home/air-quality/meteorological-data/data-for-aermod

AERMOD Sources

Garvey Reservoir Rehab - Mitigated Proposed Pump Station - 3rd Trimester Start

Health Risk Assessment Risk Factors

Residential Risk	Abbreviation	UOM	3rd Trimester	0<2	2<16	16<30
Daily Breathing Rate (95th %'ile)	DBR	L/kg-day	361	1090	572	261
Fraction Of Time At Home [a]	FAH	unitless	1	1	1	0.73
Exposure Frequency	EF	days/year	0.96	0.96	0.96	0.96
Age Sensitivity Factor	ASF	unitless	10	10	3	1
Inhalation Absorption Factor	A	unitless	1	1	1	1
Conversion Factor	CF_1	m^3/L	0.001	0.001	0.001	0.001
Conversion Factor	CF_2	$\mu g/m^3$	0.001	0.001	0.001	0.001
Cancer Potency Factor (diesel exhaust)	CPF	$mg/kg\text{-}day^{-1}$	1.1	1.1	1.1	1.1
Averaging Time (for residential exposure)	AT	years	70.00	70.00	70.00	70.00

[a] assume school or daycare will have cancer risk of >1 per million

Garvey Reservoir Rehab - Mitigated Proposed Pump Station - 3rd Trimester Start

Health Risk Assessment Exposure Duration Assumptions for Offroad Equipment

Residential Receptors

			Start Date	*1/1/2034*	*4/2/2034*	*4/2/2036*
			End Date	*4/1/2034*	*4/1/2036*	*3/30/2050*
	1/1/2034	*5/31/2035*	*Days*	*90*	*730*	*5110*
Phase	Start Date	End Date	Duration (days)	3rd Tri	0<2	02<16
Demolition - 2025			1	0	0	0
Demolition - 2026			1	0	0	0
Site Preparation - 2034	1/1/2034	3/31/2034	90	90	0	0
Site Preparation - 2026			1	0	0	0
Grading - 2034	4/1/2034	5/31/2034	61	0	60	0
Grading - 2026			1	0	0	0
Infrastructure - 2034	6/1/2034	12/31/2034	214	0	214	0
Infrastructure - 2035	1/1/2035	5/31/2035	151	0	151	0
Paving - 2025			1	0	0	0
Architectural Coating - 2026			1	0	0	0

is the start/end dates for Phase 1 and 2

Intake Factor for Inhalation, IF (m^3/kg-day)

Phase	Year	Year	Equation	3rd Trimester	0<2	2<16
Demolition - 2025		1900		0	0	0
Demolition - 2026		1900	$\frac{DBR \cdot FAH \cdot EF \cdot ED \cdot ASF \cdot A \cdot CF_1}{AT}$	0	0	0
Site Preparation - 2034		2034		0.012193657	0	0
Site Preparation - 2026		1900		0	0	0
Grading - 2034		2034		0	0.024544943	0
Grading - 2026		1900		0	0	0
Infrastructure - 2034		2034		0	0.087543629	0
Infrastructure - 2035		2035		0	0.061771439	0
Paving - 2025		1900		0	0	0
Architectural Coating - 2026		1900		0	0	0

Risk Calculation Part 1, R1

Equation	3rd Trimester	0<2	2<16
	0	0	0
	0	0	0
	1.3413E-05	0	0
	0	0	0
$IF \cdot CPF \cdot CF_2$	0	2.69994E-05	0
	0	0	0
	0	9.6298E-05	0
	0	6.79486E-05	0
	0	0	0
	0	0	0

Exposure Durations

Garvey Reservoir Rehab - Mitigated Proposed Pump Station - 3rd Trimester Start

Offroad DPM Emissions, Ground Level Concentrations and Health Risk Calculations

Residential Receptors

Phase	Year	Emissions (lbs/day)	Work Hours Per Day	Emissions (g/s)
Demolition - 2025	1900		10	0
Demolition - 2026	1900		10	0
Site Preparation - 2034	2034	0.020	10	0.000251994
Site Preparation - 2026	1900		10	0
Grading - 2034	2034	0.010	10	0.000125997
Grading - 2026	1900		10	0
Infrastructure - 2034	2034	0.010	10	0.000125997
Infrastructure - 2035	2035	0.010	10	0.000125997
Paving - 2025	1900		10	0
Architectural Coating - 2026	1900		10	0

		AERMOD Column Identifier:	*4*	*4*	*4*	*4*	*4*	*4*	*4*	*4*	*4*	*4*					
													MMULT($D30:$M30, 'Exposure Durations'!M$30:M$39)				
Garvey Reservoir Rehab - Mitigated Proposed Pump Station - 3rd Trimester Star			Demolition - 2025	Demolition - 2026	Site Preparation - 2034	Site Preparation - 202	Grading - 2034	Grading - 2026	Infrastructure - 203	Infrastructure - 203	Paving - 2025	Architectural Coating - 2	Child Risk				
Unique Identifier	X (UTM)	Y (UTM)	1900	1900	2034	1900	2034	1900	2034	2035	1900	1900	3rd Trimester	0<2	2<16	Total	per million
396166.283767377.28	396166.28	3767377	0	0	9.42711E-06	0	4.71356E-06	0	4.71356E-06	4.71356E-06	0	0	1.26446E-10	9.01449E-10	0	1.02789E-09	0.0010279
396266.283767377.28	396266.28	3767377	0	0	1.04225E-05	0	5.21125E-06	0	5.21125E-06	5.21125E-06	0	0	1.39797E-10	9.9663E-10	0	1.13643E-09	0.0011364
396366.283767377.28	396366.28	3767377	0	0	1.19521E-05	0	5.97605E-06	0	5.97605E-06	5.97605E-06	0	0	1.60314E-10	1.1429E-09	0	1.30321E-09	0.0013032
396466.283767377.28	396466.28	3767377	0	0	1.35775E-05	0	6.78873E-06	0	6.78873E-06	6.78873E-06	0	0	1.82115E-10	1.29832E-09	0	1.48043E-09	0.0014804
396566.283767377.28	396566.28	3767377	0	0	1.56715E-05	0	7.83577E-06	0	7.83577E-06	7.83577E-06	0	0	2.10203E-10	1.49856E-09	0	1.70876E-09	0.0017088
396666.283767377.28	396666.28	3767377	0	0	1.75791E-05	0	8.78957E-06	0	8.78957E-06	8.78957E-06	0	0	2.35789E-10	1.68097E-09	0	1.91676E-09	0.0019168
396766.283767377.28	396766.28	3767377	0	0	1.94111E-05	0	9.70557E-06	0	9.70557E-06	9.70557E-06	0	0	2.60362E-10	1.85615E-09	0	2.11651E-09	0.0021165
396866.283767377.28	396866.28	3767377	0	0	2.1548E-05	0	1.0774E-05	0	1.0774E-05	1.0774E-05	0	0	2.89024E-10	2.06049E-09	0	2.34951E-09	0.0023495
396966.283767377.28	396966.28	3767377	0	0	2.4257E-05	0	1.21285E-05	0	1.21285E-05	1.21285E-05	0	0	3.2536E-10	2.31953E-09	0	2.64489E-09	0.0026449
397066.283767377.28	397066.28	3767377	0	0	2.63183E-05	0	1.31591E-05	0	1.31591E-05	1.31591E-05	0	0	3.53008E-10	2.51663E-09	0	2.86964E-09	0.0028696
397166.283767377.28	397166.28	3767377	0	0	2.7165E-05	0	1.35825E-05	0	1.35825E-05	1.35825E-05	0	0	3.64365E-10	2.5976E-09	0	2.96196E-09	0.002962
397266.283767377.28	397266.28	3767377	0	0	2.69483E-05	0	1.34741E-05	0	1.34741E-05	1.34741E-05	0	0	3.61458E-10	2.57688E-09	0	2.93833E-09	0.0029383
397366.283767377.28	397366.28	3767377	0	0	2.7233E-05	0	1.36165E-05	0	1.36165E-05	1.36165E-05	0	0	3.65277E-10	2.60411E-09	0	2.96938E-09	0.0029694
397466.283767377.28	397466.28	3767377	0	0	2.70138E-05	0	1.35069E-05	0	1.35069E-05	1.35069E-05	0	0	3.62337E-10	2.58314E-09	0	2.94548E-09	0.0029455
397566.283767377.28	397566.28	3767377	0	0	2.5711E-05	0	1.28555E-05	0	1.28555E-05	1.28555E-05	0	0	3.44862E-10	2.45856E-09	0	2.80342E-09	0.0028034
397666.283767377.28	397666.28	3767377	0	0	2.39521E-05	0	1.1976E-05	0	1.1976E-05	1.1976E-05	0	0	3.2127E-10	2.29037E-09	0	2.61164E-09	0.0026116
397766.283767377.28	397766.28	3767377	0	0	2.12784E-05	0	1.06392E-05	0	1.06392E-05	1.06392E-05	0	0	2.85408E-10	2.03471E-09	0	2.32011E-09	0.0023201
397866.283767377.28	397866.28	3767377	0	0	1.90432E-05	0	9.52161E-06	0	9.52161E-06	9.52161E-06	0	0	2.55427E-10	1.82097E-09	0	2.0764E-09	0.0020764
396166.283767477.28	396166.28	3767477	0	0	9.91094E-06	0	4.95547E-06	0	4.95547E-06	4.95547E-06	0	0	1.32936E-10	9.47714E-10	0	1.08065E-09	0.0010806
396266.283767477.28	396266.28	3767477	0	0	1.08912E-05	0	5.4456E-06	0	5.4456E-06	5.4456E-06	0	0	1.46084E-10	1.04145E-09	0	1.18753E-09	0.0011875
396366.283767477.28	396366.28	3767477	0	0	1.26804E-05	0	6.34018E-06	0	6.34018E-06	6.34018E-06	0	0	1.70082E-10	1.21253E-09	0	1.38262E-09	0.0013826
396466.283767477.28	396466.28	3767477	0	0	1.46787E-05	0	7.33934E-06	0	7.33934E-06	7.33934E-06	0	0	1.96885E-10	1.40362E-09	0	1.6005E-09	0.0016005
396566.283767477.28	396566.28	3767477	0	0	1.70021E-05	0	8.50103E-06	0	8.50103E-06	8.50103E-06	0	0	2.28049E-10	1.62579E-09	0	1.85384E-09	0.0018538
396666.283767477.28	396666.28	3767477	0	0	1.95321E-05	0	9.76604E-06	0	9.76604E-06	9.76604E-06	0	0	2.61984E-10	1.86772E-09	0	2.1297E-09	0.0021297
396766.283767477.28	396766.28	3767477	0	0	2.24174E-05	0	1.12087E-05	0	1.12087E-05	1.12087E-05	0	0	3.00685E-10	2.14362E-09	0	2.44431E-09	0.0024443
396866.283767477.28	396866.28	3767477	0	0	2.57765E-05	0	1.28883E-05	0	1.28883E-05	1.28883E-05	0	0	3.45741E-10	2.46483E-09	0	2.81057E-09	0.0028106
396966.283767477.28	396966.28	3767477	0	0	3.0073E-05	0	1.50365E-05	0	1.50365E-05	1.50365E-05	0	0	4.0337E-10	2.87567E-09	0	3.27904E-09	0.003279
397066.283767477.28	397066.28	3767477	0	0	3.3926E-05	0	1.6963E-05	0	1.6963E-05	1.6963E-05	0	0	4.5505E-10	3.24411E-09	0	3.69916E-09	0.0036992
397166.283767477.28	397166.28	3767477	0	0	3.6204E-05	0	1.8102E-05	0	1.8102E-05	1.8102E-05	0	0	4.85606E-10	3.46194E-09	0	3.94754E-09	0.0039475
397266.283767477.28	397266.28	3767477	0	0	3.66198E-05	0	1.83099E-05	0	1.83099E-05	1.83099E-05	0	0	4.91183E-10	3.5017E-09	0	3.99288E-09	0.0039929
397366.283767477.28	397366.28	3767477	0	0	3.65342E-05	0	1.82671E-05	0	1.82671E-05	1.82671E-05	0	0	4.90033E-10	3.49351E-09	0	3.98354E-09	0.0039835
397466.283767477.28	397466.28	3767477	0	0	3.62166E-05	0	1.81083E-05	0	1.81083E-05	1.81083E-05	0	0	4.85775E-10	3.46314E-09	0	3.94892E-09	0.0039489
397566.283767477.28	397566.28	3767477	0	0	3.41251E-05	0	1.70625E-05	0	1.70625E-05	1.70625E-05	0	0	4.57721E-10	3.26314E-09	0	3.72086E-09	0.0037209
397666.283767477.28	397666.28	3767477	0	0	3.09449E-05	0	1.54725E-05	0	1.54725E-05	1.54725E-05	0	0	4.15065E-10	2.95905E-09	0	3.37411E-09	0.0033741
397766.283767477.28	397766.28	3767477	0	0	2.73162E-05	0	1.36581E-05	0	1.36581E-05	1.36581E-05	0	0	3.66393E-10	2.61206E-09	0	2.97845E-09	0.0029784
397866.283767477.28	397866.28	3767477	0	0	2.37404E-05	0	1.18702E-05	0	1.18702E-05	1.18702E-05	0	0	3.1843E-10	2.27013E-09	0	2.58856E-09	0.0025886
396166.283767577.28	396166.28	3767577	0	0	1.01755E-05	0	5.08777E-06	0	5.08777E-06	5.08777E-06	0	0	1.36485E-10	9.73015E-10	0	1.1095E-09	0.0011095
396266.283767577.28	396266.28	3767577	0	0	1.13901E-05	0	5.69507E-06	0	5.69507E-06	5.69507E-06	0	0	1.52776E-10	1.08916E-09	0	1.24194E-09	0.0012419
396366.283767577.28	396366.28	3767577	0	0	1.31642E-05	0	6.58209E-06	0	6.58209E-06	6.58209E-06	0	0	1.76572E-10	1.2588E-09	0	1.43537E-09	0.0014354
396466.283767577.28	396466.28	3767577	0	0	1.54825E-05	0	7.74127E-06	0	7.74127E-06	7.74127E-06	0	0	2.07668E-10	1.48049E-09	0	1.68815E-09	0.0016882
396566.283767577.28	396566.28	3767577	0	0	1.84107E-05	0	9.20536E-06	0	9.20536E-06	9.20536E-06	0	0	2.46943E-10	1.76049E-09	0	2.00743E-09	0.0020074
396666.283767577.28	396666.28	3767577	0	0	2.19865E-05	0	1.09933E-05	0	1.09933E-05	1.09933E-05	0	0	2.94906E-10	2.10242E-09	0	2.39732E-09	0.0023973
396766.283767577.28	396766.28	3767577	0	0	2.53431E-05	0	1.26715E-05	0	1.26715E-05	1.26715E-05	0	0	3.39927E-10	2.42338E-09	0	2.76331E-09	0.0027633
396866.283767577.28	396866.28	3767577	0	0	3.09374E-05	0	1.54687E-05	0	1.54687E-05	1.54687E-05	0	0	4.14963E-10	2.95832E-09	0	3.37329E-09	0.0033733
396966.283767577.28	396966.28	3767577	0	0	3.73531E-05	0	1.86766E-05	0	1.86766E-05	1.86766E-05	0	0	5.01018E-10	3.57182E-09	0	4.07284E-09	0.0040728
397066.283767577.28	397066.28	3767577	0	0	4.41847E-05	0	2.20924E-05	0	2.20924E-05	2.20924E-05	0	0	5.9265E-10	4.22507E-09	0	4.81772E-09	0.0048177
397166.283767577.28	397166.28	3767577	0	0	5.00562E-05	0	2.50281E-05	0	2.50281E-05	2.50281E-05	0	0	6.71405E-10	4.78652E-09	0	5.45793E-09	0.0054579
397266.283767577.28	397266.28	3767577	0	0	5.25711E-05	0	2.62855E-05	0	2.62855E-05	2.62855E-05	0	0	7.05137E-10	5.027E-09	0	5.73214E-09	0.0057321
397366.283767577.28	397366.28	3767577	0	0	5.25056E-05	0	2.62528E-05	0	2.62528E-05	2.62528E-05	0	0	7.04258E-10	5.02074E-09	0	5.725E-09	0.005725

Garvey Reservoir Rehab - Mitigated Proposed Pump Station - 3rd Trimester Star			Demolition - 2025	Demolition - 2026	Site Preparation - 203	Site Preparation - 202	Grading - 2034	Grading - 2026	Infrastructure - 203	Infrastructure - 203	Paving - 2025	Architectural Coating - 2	Child Risk				
Unique Identifier	X (UTM)	Y (UTM)	1900	1900	2034	1900	2034	1900	2034	2035	1900	1900	3rd Trimester	0<2	2<16	Total	per million
397466.283767577.28	397466.28	3767577	0	0	5.18907E-05	0	2.59453E-05	0	2.59453E-05	2.59453E-05	0	0	6.96011E-10	4.96194E-09	0	5.65796E-09	0.005658
397566.283767577.28	397566.28	3767577	0	0	4.76521E-05	0	2.38261E-05	0	2.38261E-05	2.38261E-05	0	0	6.39159E-10	4.55664E-09	0	5.1958E-09	0.0051958
397666.283767577.28	397666.28	3767577	0	0	4.18134E-05	0	2.09067E-05	0	2.09067E-05	2.09067E-05	0	0	5.60845E-10	3.99833E-09	0	4.55917E-09	0.0045592
397766.283767577.28	397766.28	3767577	0	0	3.54128E-05	0	1.77064E-05	0	1.77064E-05	1.77064E-05	0	0	4.74992E-10	3.38628E-09	0	3.86127E-09	0.0038613
397866.283767577.28	397866.28	3767577	0	0	2.95539E-05	0	1.4777E-05	0	1.4777E-05	1.4777E-05	0	0	3.96407E-10	2.82603E-09	0	3.22244E-09	0.0032224
396166.283767677.28	396166.28	3767677	0	0	1.05157E-05	0	5.25786E-06	0	5.25786E-06	5.25786E-06	0	0	1.41048E-10	1.00555E-09	0	1.14659E-09	0.0011466
396266.283767677.28	396266.28	3767677	0	0	1.18538E-05	0	5.92691E-06	0	5.92691E-06	5.92691E-06	0	0	1.58996E-10	1.1335E-09	0	1.29249E-09	0.0012925
396366.283767677.28	396366.28	3767677	0	0	1.38219E-05	0	6.91095E-06	0	6.91095E-06	6.91095E-06	0	0	1.85393E-10	1.32169E-09	0	1.50708E-09	0.0015071
396466.283767677.28	396466.28	3767677	0	0	1.64477E-05	0	8.22384E-06	0	8.22384E-06	8.22384E-06	0	0	2.20613E-10	1.57278E-09	0	1.79339E-09	0.0017934
396566.283767677.28	396566.28	3767677	0	0	1.96404E-05	0	9.82022E-06	0	9.82022E-06	9.82022E-06	0	0	2.63438E-10	1.87808E-09	0	2.14152E-09	0.0021415
396666.283767677.28	396666.28	3767677	0	0	2.31608E-05	0	1.15804E-05	0	1.15804E-05	1.15804E-05	0	0	3.10656E-10	2.21471E-09	0	2.52536E-09	0.0025254
396766.283767677.28	396766.28	3767677	0	0	2.88508E-05	0	1.44254E-05	0	1.44254E-05	1.44254E-05	0	0	3.86977E-10	2.7588E-09	0	3.14578E-09	0.0031458
396866.283767677.28	396866.28	3767677	0	0	3.72322E-05	0	1.86161E-05	0	1.86161E-05	1.86161E-05	0	0	4.99396E-10	3.56025E-09	0	4.05965E-09	0.0040596
396966.283767677.28	396966.28	3767677	0	0	4.81133E-05	0	2.40566E-05	0	2.40566E-05	2.40566E-05	0	0	6.45345E-10	4.60074E-09	0	5.24608E-09	0.0052461
397066.283767677.28	397066.28	3767677	0	0	5.99318E-05	0	2.99659E-05	0	2.99659E-05	2.99659E-05	0	0	8.03867E-10	5.73086E-09	0	6.53473E-09	0.0065347
397166.283767677.28	397166.28	3767677	0	0	7.24156E-05	0	3.62078E-05	0	3.62078E-05	3.62078E-05	0	0	9.71313E-10	6.9246E-09	0	7.89591E-09	0.0078959
397266.283767677.28	397266.28	3767677	0	0	8.30775E-05	0	4.15388E-05	0	4.15388E-05	4.15388E-05	0	0	1.11432E-09	7.94412E-09	0	9.05844E-09	0.0090584
397366.283767677.28	397366.28	3767677	0	0	8.36042E-05	0	4.18021E-05	0	4.18021E-05	4.18021E-05	0	0	1.12139E-09	7.99448E-09	0	9.11587E-09	0.0091159
397466.283767677.28	397466.28	3767677	0	0	8.18201E-05	0	4.091E-05	0	4.091E-05	4.091E-05	0	0	1.09745E-09	7.82388E-09	0	8.92134E-09	0.0089213
397566.283767677.28	397566.28	3767677	0	0	7.15992E-05	0	3.57996E-05	0	3.57996E-05	3.57996E-05	0	0	9.60361E-10	6.84653E-09	0	7.80689E-09	0.0078069
397666.283767677.28	397666.28	3767677	0	0	5.89113E-05	0	2.94556E-05	0	2.94556E-05	2.94556E-05	0	0	7.90178E-10	5.63327E-09	0	6.42345E-09	0.0064235
397766.283767677.28	397766.28	3767677	0	0	4.68861E-05	0	2.3443E-05	0	2.3443E-05	2.3443E-05	0	0	6.28884E-10	4.48339E-09	0	5.11227E-09	0.0051123
397866.283767677.28	397866.28	3767677	0	0	3.68567E-05	0	1.84284E-05	0	1.84284E-05	1.84284E-05	0	0	4.9436E-10	3.52435E-09	0	4.01871E-09	0.0040187
396166.283767777.28	396166.28	3767777	0	0	1.07198E-05	0	5.35992E-06	0	5.35992E-06	5.35992E-06	0	0	1.43786E-10	1.02506E-09	0	1.16885E-09	0.0011688
396266.283767777.28	396266.28	3767777	0	0	1.23679E-05	0	6.18394E-06	0	6.18394E-06	6.18394E-06	0	0	1.65891E-10	1.18265E-09	0	1.34855E-09	0.0013485
396366.283767777.28	396366.28	3767777	0	0	1.43486E-05	0	7.17428E-06	0	7.17428E-06	7.17428E-06	0	0	1.92458E-10	1.37205E-09	0	1.56451E-09	0.0015645
396466.283767777.28	396466.28	3767777	0	0	1.70323E-05	0	8.51615E-06	0	8.51615E-06	8.51615E-06	0	0	2.28455E-10	1.62868E-09	0	1.85713E-09	0.0018571
396566.283767777.28	396566.28	3767777	0	0	2.02604E-05	0	1.01302E-05	0	1.01302E-05	1.01302E-05	0	0	2.71753E-10	1.93736E-09	0	2.20911E-09	0.0022091
396666.283767777.28	396666.28	3767777	0	0	2.49172E-05	0	1.24586E-05	0	1.24586E-05	1.24586E-05	0	0	3.34215E-10	2.38266E-09	0	2.71687E-09	0.0027169
396766.283767777.28	396766.28	3767777	0	0	3.24266E-05	0	1.62133E-05	0	1.62133E-05	1.62133E-05	0	0	4.34939E-10	3.10073E-09	0	3.53567E-09	0.0035357
396866.283767777.28	396866.28	3767777	0	0	4.35169E-05	0	2.17585E-05	0	2.17585E-05	2.17585E-05	0	0	5.83693E-10	4.16122E-09	0	4.74491E-09	0.0047449
396966.283767777.28	396966.28	3767777	0	0	5.96143E-05	0	2.98072E-05	0	2.98072E-05	2.98072E-05	0	0	7.99608E-10	5.7005E-09	0	6.50011E-09	0.0065001
397066.283767777.28	397066.28	3767777	0	0	8.20192E-05	0	4.10096E-05	0	4.10096E-05	4.10096E-05	0	0	1.10012E-09	7.84292E-09	0	8.94304E-09	0.008943
397166.283767777.28	397166.28	3767777	0	0	0.000110565	0	5.52825E-05	0	5.52825E-05	5.52825E-05	0	0	1.48301E-09	1.05726E-08	0	1.20556E-08	0.0120556
397266.283767777.28	397266.28	3767777	0	0	0.000142541	0	7.12703E-05	0	7.12703E-05	7.12703E-05	0	0	1.9119E-09	1.36302E-08	0	1.55421E-08	0.0155421
397366.283767777.28	397366.28	3767777	0	0	0.000154679	0	7.73396E-05	0	7.73396E-05	7.73396E-05	0	0	2.07472E-09	1.47909E-08	0	1.68656E-08	0.0168656
397466.283767777.28	397466.28	3767777	0	0	0.000147198	0	7.35988E-05	0	7.35988E-05	7.35988E-05	0	0	1.97436E-09	1.40755E-08	0	1.60498E-08	0.0160498
397566.283767777.28	397566.28	3767777	0	0	0.000118359	0	5.91796E-05	0	5.91796E-05	5.91796E-05	0	0	1.58756E-09	1.13179E-08	0	1.29054E-08	0.0129054
397666.283767777.28	397666.28	3767777	0	0	8.69582E-05	0	4.34791E-05	0	4.34791E-05	4.34791E-05	0	0	1.16637E-09	8.31521E-09	0	9.48158E-09	0.0094816
397766.283767777.28	397766.28	3767777	0	0	6.3117E-05	0	3.15585E-05	0	3.15585E-05	3.15585E-05	0	0	8.4659E-10	6.03544E-09	0	6.88203E-09	0.006882
397866.283767777.28	397866.28	3767777	0	0	4.64149E-05	0	2.32074E-05	0	2.32074E-05	2.32074E-05	0	0	6.22564E-10	4.43833E-09	0	5.06089E-09	0.0050609
396166.283767877.28	396166.28	3767877	0	0	1.08307E-05	0	5.41536E-06	0	5.41536E-06	5.41536E-06	0	0	1.45273E-10	1.03567E-09	0	1.18094E-09	0.0011809
396266.283767877.28	396266.28	3767877	0	0	1.25443E-05	0	6.27214E-06	0	6.27214E-06	6.27214E-06	0	0	1.68257E-10	1.19952E-09	0	1.36778E-09	0.0013678
396366.283767877.28	396366.28	3767877	0	0	1.46938E-05	0	7.3469E-06	0	7.3469E-06	7.3469E-06	0	0	1.97088E-10	1.40506E-09	0	1.60215E-09	0.0016022
396466.283767877.28	396466.28	3767877	0	0	1.73775E-05	0	8.68877E-06	0	8.68877E-06	8.68877E-06	0	0	2.33085E-10	1.66169E-09	0	1.89478E-09	0.0018948
396566.283767877.28	396566.28	3767877	0	0	2.09231E-05	0	1.04615E-05	0	1.04615E-05	1.04615E-05	0	0	2.80642E-10	2.00073E-09	0	2.28137E-09	0.0022814
397466.283767877.28	397466.28	3767877	0	0	0.000325239	0	0.00016262	0	0.00016262	0.00016262	0	0	4.36244E-09	3.11003E-08	0	3.54628E-08	0.0354628
397566.283767877.28	397566.28	3767877	0	0	0.000219449	0	0.000109725	0	0.000109725	0.000109725	0	0	2.94348E-09	2.09844E-08	0	2.39279E-08	0.0239279
397666.283767877.28	397666.28	3767877	0	0	0.000132741	0	6.63703E-05	0	6.63703E-05	6.63703E-05	0	0	1.78045E-09	1.26931E-08	0	1.44735E-08	0.0144735
397766.283767877.28	397766.28	3767877	0	0	8.43476E-05	0	4.21738E-05	0	4.21738E-05	4.21738E-05	0	0	1.13136E-09	8.06557E-09	0	9.19693E-09	0.0091969
397866.283767877.28	397866.28	3767877	0	0	5.68323E-05	0	2.84162E-05	0	2.84162E-05	2.84162E-05	0	0	7.62293E-10	5.43448E-09	0	6.19677E-09	0.0061968
396166.283767977.28	396166.28	3767977	0	0	1.07879E-05	0	5.39394E-06	0	5.39394E-06	5.39394E-06	0	0	1.44698E-10	1.03157E-09	0	1.17627E-09	0.0011763
396266.283767977.28	396266.28	3767977	0	0	1.25518E-05	0	6.27592E-06	0	6.27592E-06	6.27592E-06	0	0	1.68358E-10	1.20024E-09	0	1.3686E-09	0.0013686
396366.283767977.28	396366.28	3767977	0	0	1.47366E-05	0	7.36832E-06	0	7.36832E-06	7.36832E-06	0	0	1.97663E-10	1.40916E-09	0	1.60682E-09	0.0016068
396466.283767977.28	396466.28	3767977	0	0	1.74279E-05	0	8.71397E-06	0	8.71397E-06	8.71397E-06	0	0	2.33761E-10	1.66651E-09	0	1.90027E-09	0.0019003
397466.283767977.28	397466.28	3767977	0	0	0.001164663	0	0.000582331	0	0.000582331	0.000582331	0	0	1.56217E-08	1.11369E-07	0	1.2699E-07	0.1269902
397566.283767977.28	397566.28	3767977	0	0	0.000413127	0	0.000206564	0	0.000206564	0.000206564	0	0	5.54129E-09	3.95045E-08	0	4.50458E-08	0.0450458
397666.283767977.28	397666.28	3767977	0	0	0.00018765	0	9.38251E-05	0	9.38251E-05	9.38251E-05	0	0	2.51696E-09	1.79437E-08	0	2.04606E-08	0.0204606
397766.283767977.28	397766.28	3767977	0	0	0.000107468	0	5.3734E-05	0	5.3734E-05	5.3734E-05	0	0	1.44147E-09	1.02764E-08	0	1.17179E-08	0.0117179
397866.283767977.28	397866.28	3767977	0	0	6.55841E-05	0	3.2792E-05	0	3.2792E-05	3.2792E-05	0	0	8.79681E-10	6.27135E-09	0	7.15103E-09	0.007151
396166.283768077.28	396166.28	3768077	0	0	1.08761E-05	0	5.43804E-06	0	5.43804E-06	5.43804E-06	0	0	1.45881E-10	1.04E-09	0	1.18588E-09	0.0011859
396266.283768077.28	396266.28	3768077	0	0	1.24536E-05	0	6.22678E-06	0	6.22678E-06	6.22678E-06	0	0	1.6704E-10	1.19085E-09	0	1.35789E-09	0.0013579
396366.283768077.28	396366.28	3768077	0	0	1.46132E-05	0	7.30658E-06	0	7.30658E-06	7.30658E-06	0	0	1.96007E-10	1.39735E-09	0	1.59336E-09	0.0015934
396466.283768077.28	396466.28	3768077	0	0	1.7496E-05	0	8.74799E-06	0	8.74799E-06	8.74799E-06	0	0	2.34674E-10	1.67302E-09	0	1.90769E-09	0.0019077
397466.283768077.28	397466.28	3768077	0	0	0.006065897	0	0.003032948	0	0.003032948	0.003032948	0	0	8.1362E-08	5.80039E-07	0	6.61401E-07	0.6614013
397566.283768077.28	397566.28	3768077	0	0	0.000752297	0	0.000376148	0	0.000376148	0.000376148	0	0	1.00906E-08	7.19369E-08	0	8.20274E-08	0.0820274
397666.283768077.28	397666.28	3768077	0	0	0.000266915	0	0.000133458	0	0.000133458	0.000133458	0	0	3.58014E-09	2.55232E-08	0	2.91034E-08	0.0291034
397766.283768077.28	397766.28	3768077	0	0	0.000133602	0	6.68012E-05	0	6.68012E-05	6.68012E-05	0	0	1.79201E-09	1.27755E-08	0	1.45675E-08	0.0145675
397866.283768077.28	397866.28	3768077	0	0	7.76798E-05	0	3.88399E-05	0	3.88399E-05	3.88399E-05	0	0	1.04192E-09	7.42798E-09	0	8.4699E-09	0.0084699
396166.283768177.28	396166.28	3768177	0	0	1.07803E-05	0	5.39016E-06	0	5.39016E-06	5.39016E-06	0	0	1.44597E-10	1.03085E-09	0	1.17544E-09	0.0011754
396266.283768177.28	396266.28	3768177	0	0	1.23855E-05	0	6.19276E-06	0	6.19276E-06	6.19276E-06	0	0	1.66127E-10	1.18434E-09	0	1.35047E-09	0.0013505
396366.283768177.28	396366.28	3768177	0	0	1.45098E-05	0	7.25492E-06	0	7.25492E-06	7.25492E-06	0	0	1.94621E-10	1.38747E-09	0	1.5821E-09	0.0015821
396466.283768177.28	396466.28	3768177	0	0	1.72188E-05	0	8.60939E-06	0	8.60939E-06	8.60939E-06	0	0	2.30956E-10	1.64651E-09	0	1.87747E-09	0.0018775
397466.283768177.28	397466.28	3768177	0	0	0.002310031	0	0.001155015	0	0.001155015	0.001155015	0	0	3.09845E-08	2.20892E-07	0	2.51877E-07	0.2518766
397566.283768177.28	397566.28	3768177	0	0	0.00076348	0	0.00038174	0	0.00038174	0.00038174	0	0	1.02406E-08	7.30063E-08	0	8.32468E-08	0.0832468
397666.283768177.28	397666.28	3768177	0	0	0.000301209	0	0.000150604	0	0.000150604	0.000150604	0	0	4.04012E-09	2.88025E-08	0	3.28426E-08	0.0328426
397766.283768177.28	397766.28	3768177	0	0	0.000155985	0	7.79923E-05	0	7.79923E-05	7.79923E-05	0	0	2.09222E-09	1.49157E-08	0	1.70079E-08	0.0170079

Garvey Reservoir Rehab - Mitigated Proposed Pump Station - 3rd Trimester Star			Demolition - 2025	Demolition - 2026	Site Preparation - 203	Site Preparation - 202	Grading - 2034	Grading - 2026	Infrastructure - 203	Infrastructure - 203	Paving - 2025	Architectural Coating - 2	Child Risk				
Unique Identifier	X (UTM)	Y (UTM)	1900	1900	2034	1900	2034	1900	2034	2035	1900	1900	3rd Trimester	0<2	2<16	Total	per million
397866.283768177.28	397866.28	3768177	0	0	8.75555E-05	0	4.37777E-05	0	4.37777E-05	4.37777E-05	0	0	1.17438E-09	8.37232E-09	0	9.5467E-09	0.0095467
396166.283768277.28	396166.28	3768277	0	0	1.05888E-05	0	5.2944E-06	0	5.2944E-06	5.2944E-06	0	0	1.42028E-10	1.01253E-09	0	1.15456E-09	0.0011546
396266.283768277.28	396266.28	3768277	0	0	1.20731E-05	0	6.03653E-06	0	6.03653E-06	6.03653E-06	0	0	1.61936E-10	1.15446E-09	0	1.3164E-09	0.0013164
396366.283768277.28	396366.28	3768277	0	0	1.41016E-05	0	7.0508E-06	0	7.0508E-06	7.0508E-06	0	0	1.89145E-10	1.34844E-09	0	1.53758E-09	0.0015376
396466.283768277.28	396466.28	3768277	0	0	1.66972E-05	0	8.34858E-06	0	8.34858E-06	8.34858E-06	0	0	2.23959E-10	1.59663E-09	0	1.82059E-09	0.0018206
397366.283768277.28	397366.28	3768277	0	0	0.000649811	0	0.000324905	0	0.000324905	0.000324905	0	0	8.71592E-09	6.21368E-08	0	7.08528E-08	0.0708528
397466.283768277.28	397466.28	3768277	0	0	0.000762979	0	0.000381489	0	0.000381489	0.000381489	0	0	1.02339E-08	7.29583E-08	0	8.31922E-08	0.0831922
397566.283768277.28	397566.28	3768277	0	0	0.000517619	0	0.00025881	0	0.00025881	0.00025881	0	0	6.94284E-09	4.94963E-08	0	5.64391E-08	0.0564391
397666.283768277.28	397666.28	3768277	0	0	0.000271849	0	0.000135925	0	0.000135925	0.000135925	0	0	3.64632E-09	2.5995E-08	0	2.96413E-08	0.0296413
397766.283768277.28	397766.28	3768277	0	0	0.000153238	0	7.66189E-05	0	7.66189E-05	7.66189E-05	0	0	2.05538E-09	1.46531E-08	0	1.67084E-08	0.0167084
397866.283768277.28	397866.28	3768277	0	0	9.68919E-05	0	4.84459E-05	0	4.84459E-05	4.84459E-05	0	0	1.29961E-09	9.26509E-09	0	1.05647E-08	0.0105647
396166.283768377.28	396166.28	3768377	0	0	1.02285E-05	0	5.11423E-06	0	5.11423E-06	5.11423E-06	0	0	1.37194E-10	9.78076E-10	0	1.11527E-09	0.0011153
396266.283768377.28	396266.28	3768377	0	0	1.17228E-05	0	5.86139E-06	0	5.86139E-06	5.86139E-06	0	0	1.57238E-10	1.12097E-09	0	1.27821E-09	0.0012782
396366.283768377.28	396366.28	3768377	0	0	1.35926E-05	0	6.79629E-06	0	6.79629E-06	6.79629E-06	0	0	1.82318E-10	1.29976E-09	0	1.48208E-09	0.0014821
396466.283768377.28	396466.28	3768377	0	0	1.60067E-05	0	8.00334E-06	0	8.00334E-06	8.00334E-06	0	0	2.14698E-10	1.53061E-09	0	1.74531E-09	0.0017453
397266.283768377.28	397266.28	3768377	0	0	0.000196523	0	9.82615E-05	0	9.82615E-05	9.82615E-05	0	0	2.63597E-09	1.87921E-08	0	2.14281E-08	0.0214281
397366.283768377.28	397366.28	3768377	0	0	0.000303779	0	0.00015189	0	0.00015189	0.00015189	0	0	4.0746E-09	2.90483E-08	0	3.31229E-08	0.0331229
397466.283768377.28	397466.28	3768377	0	0	0.000366536	0	0.000183268	0	0.000183268	0.000183268	0	0	4.91636E-09	3.50493E-08	0	3.99656E-08	0.0399656
397566.283768377.28	397566.28	3768377	0	0	0.000320144	0	0.000160072	0	0.000160072	0.000160072	0	0	4.2941E-09	3.06131E-08	0	3.49072E-08	0.0349072
397666.283768377.28	397666.28	3768377	0	0	0.000222972	0	0.000111486	0	0.000111486	0.000111486	0	0	2.99073E-09	2.13213E-08	0	2.4312E-08	0.024312
397766.283768377.28	397766.28	3768377	0	0	0.000144471	0	7.22355E-05	0	7.22355E-05	7.22355E-05	0	0	1.93779E-09	1.38147E-08	0	1.57525E-08	0.0157525
397866.283768377.28	397866.28	3768377	0	0	9.89809E-05	0	4.94904E-05	0	4.94904E-05	4.94904E-05	0	0	1.32763E-09	9.46485E-09	0	1.07925E-08	0.0107925
396166.283768477.28	396166.28	3768477	0	0	9.86306E-06	0	4.93153E-06	0	4.93153E-06	4.93153E-06	0	0	1.32293E-10	9.43136E-10	0	1.07543E-09	0.0010754
396266.283768477.28	396266.28	3768477	0	0	1.1307E-05	0	5.6535E-06	0	5.6535E-06	5.6535E-06	0	0	1.51661E-10	1.08121E-09	0	1.23287E-09	0.0012329
396366.283768477.28	396366.28	3768477	0	0	1.30281E-05	0	6.51406E-06	0	6.51406E-06	6.51406E-06	0	0	1.74746E-10	1.24579E-09	0	1.42053E-09	0.0014205
396466.283768477.28	396466.28	3768477	0	0	1.51398E-05	0	7.56991E-06	0	7.56991E-06	7.56991E-06	0	0	2.03071E-10	1.44772E-09	0	1.65079E-09	0.0016508
397166.283768477.28	397166.28	3768477	0	0	8.54639E-05	0	4.2732E-05	0	4.2732E-05	4.2732E-05	0	0	1.14633E-09	8.17232E-09	0	9.31865E-09	0.0093186
397266.283768477.28	397266.28	3768477	0	0	0.000126904	0	6.34522E-05	0	6.34522E-05	6.34522E-05	0	0	1.70217E-09	1.2135E-08	0	1.38372E-08	0.0138372
397366.283768477.28	397366.28	3768477	0	0	0.000174768	0	8.73841E-05	0	8.73841E-05	8.73841E-05	0	0	2.34417E-09	1.67119E-08	0	1.9056E-08	0.019056
397466.283768477.28	397466.28	3768477	0	0	0.000206638	0	0.000103319	0	0.000103319	0.000103319	0	0	2.77164E-09	1.97593E-08	0	2.2531E-08	0.022531
397566.283768477.28	397566.28	3768477	0	0	0.000196077	0	9.80384E-05	0	9.80384E-05	9.80384E-05	0	0	2.62998E-09	1.87495E-08	0	2.13794E-08	0.0213794
397666.283768477.28	397666.28	3768477	0	0	0.000157413	0	7.87067E-05	0	7.87067E-05	7.87067E-05	0	0	2.11139E-09	1.50523E-08	0	1.71637E-08	0.0171637
397766.283768477.28	397766.28	3768477	0	0	0.000121262	0	6.06311E-05	0	6.06311E-05	6.06311E-05	0	0	1.62649E-09	1.15955E-08	0	1.3222E-08	0.013222
397866.283768477.28	397866.28	3768477	0	0	8.75404E-05	0	4.37702E-05	0	4.37702E-05	4.37702E-05	0	0	1.17418E-09	8.37087E-09	0	9.54505E-09	0.0095451
396166.283768577.28	396166.28	3768577	0	0	9.47247E-06	0	4.73624E-06	0	4.73624E-06	4.73624E-06	0	0	1.27054E-10	9.05786E-10	0	1.03284E-09	0.0010328
396266.283768577.28	396266.28	3768577	0	0	1.03721E-05	0	5.18605E-06	0	5.18605E-06	5.18605E-06	0	0	1.39121E-10	9.91811E-10	0	1.13093E-09	0.0011309
396366.283768577.28	396366.28	3768577	0	0	1.21764E-05	0	6.08819E-06	0	6.08819E-06	6.08819E-06	0	0	1.63322E-10	1.16434E-09	0	1.32766E-09	0.0013277
396466.283768577.28	396466.28	3768577	0	0	1.41974E-05	0	7.09868E-06	0	7.09868E-06	7.09868E-06	0	0	1.9043E-10	1.35759E-09	0	1.54802E-09	0.001548
396566.283768577.28	396566.28	3768577	0	0	1.66745E-05	0	8.33724E-06	0	8.33724E-06	8.33724E-06	0	0	2.23655E-10	1.59446E-09	0	1.81812E-09	0.0018181
396866.283768577.28	396866.28	3768577	0	0	2.96623E-05	0	1.48311E-05	0	1.48311E-05	1.48311E-05	0	0	3.97861E-10	2.8364E-09	0	3.23426E-09	0.0032343
396966.283768577.28	396966.28	3768577	0	0	3.75018E-05	0	1.87509E-05	0	1.87509E-05	1.87509E-05	0	0	5.03013E-10	3.58604E-09	0	4.08905E-09	0.004089
397066.283768577.28	397066.28	3768577	0	0	4.83804E-05	0	2.41902E-05	0	2.41902E-05	2.41902E-05	0	0	6.48928E-10	4.62628E-09	0	5.27521E-09	0.0052752
397166.283768577.28	397166.28	3768577	0	0	6.47273E-05	0	3.23636E-05	0	3.23636E-05	3.23636E-05	0	0	8.68189E-10	6.18942E-09	0	7.05761E-09	0.0070576
397266.283768577.28	397266.28	3768577	0	0	8.63761E-05	0	4.31881E-05	0	4.31881E-05	4.31881E-05	0	0	1.15857E-09	8.25955E-09	0	9.41811E-09	0.0094181
397366.283768577.28	397366.28	3768577	0	0	0.000112253	0	5.61267E-05	0	5.61267E-05	5.61267E-05	0	0	1.50566E-09	1.0734E-08	0	1.22397E-08	0.0122397
397466.283768577.28	397466.28	3768577	0	0	0.000129893	0	6.49465E-05	0	6.49465E-05	6.49465E-05	0	0	1.74226E-09	1.24208E-08	0	1.4163E-08	0.014163
397566.283768577.28	397566.28	3768577	0	0	0.000131206	0	6.5603E-05	0	6.5603E-05	6.5603E-05	0	0	1.75987E-09	1.25463E-08	0	1.43062E-08	0.0143062
397666.283768577.28	397666.28	3768577	0	0	0.000115698	0	5.78491E-05	0	5.78491E-05	5.78491E-05	0	0	1.55186E-09	1.10634E-08	0	1.26153E-08	0.0126153
397766.283768577.28	397766.28	3768577	0	0	9.28398E-05	0	4.64199E-05	0	4.64199E-05	4.64199E-05	0	0	1.24526E-09	8.87762E-09	0	1.01229E-08	0.0101229
397866.283768577.28	397866.28	3768577	0	0	7.31187E-05	0	3.65594E-05	0	3.65594E-05	3.65594E-05	0	0	9.80743E-10	6.99183E-09	0	7.97257E-09	0.0079726
396166.283768677.28	396166.28	3768677	0	0	9.0214E-06	0	4.5107E-06	0	4.5107E-06	4.5107E-06	0	0	1.21004E-10	8.62653E-10	0	9.83658E-10	0.0009837
396266.283768677.28	396266.28	3768677	0	0	1.01705E-05	0	5.08525E-06	0	5.08525E-06	5.08525E-06	0	0	1.36417E-10	9.72533E-10	0	1.10895E-09	0.001109
396366.283768677.28	396366.28	3768677	0	0	1.14935E-05	0	5.74673E-06	0	5.74673E-06	5.74673E-06	0	0	1.54162E-10	1.09904E-09	0	1.2532E-09	0.0012532
396466.283768677.28	396466.28	3768677	0	0	1.31969E-05	0	6.59847E-06	0	6.59847E-06	6.59847E-06	0	0	1.77011E-10	1.26193E-09	0	1.43894E-09	0.0014389
396566.283768677.28	396566.28	3768677	0	0	1.5291E-05	0	7.64551E-06	0	7.64551E-06	7.64551E-06	0	0	2.05099E-10	1.46217E-09	0	1.66727E-09	0.0016673
396666.283768677.28	396666.28	3768677	0	0	1.78941E-05	0	8.94706E-06	0	8.94706E-06	8.94706E-06	0	0	2.40014E-10	1.71109E-09	0	1.9511E-09	0.0019511
396766.283768677.28	396766.28	3768677	0	0	2.11927E-05	0	1.05964E-05	0	1.05964E-05	1.05964E-05	0	0	2.84259E-10	2.02651E-09	0	2.31077E-09	0.0023108
396866.283768677.28	396866.28	3768677	0	0	2.56026E-05	0	1.28013E-05	0	1.28013E-05	1.28013E-05	0	0	3.43409E-10	2.4482E-09	0	2.79161E-09	0.0027916
396966.283768677.28	396966.28	3768677	0	0	3.14665E-05	0	1.57333E-05	0	1.57333E-05	1.57333E-05	0	0	4.22062E-10	3.00893E-09	0	3.43099E-09	0.003431
397066.283768677.28	397066.28	3768677	0	0	3.94044E-05	0	1.97022E-05	0	1.97022E-05	1.97022E-05	0	0	5.28532E-10	3.76796E-09	0	4.2965E-09	0.0042965
397166.283768677.28	397166.28	3768677	0	0	4.95522E-05	0	2.47761E-05	0	2.47761E-05	2.47761E-05	0	0	6.64645E-10	4.73833E-09	0	5.40297E-09	0.005403
397366.283768677.28	397366.28	3768677	0	0	7.77151E-05	0	3.88575E-05	0	3.88575E-05	3.88575E-05	0	0	1.04239E-09	7.43135E-09	0	8.47374E-09	0.0084737
397466.283768677.28	397466.28	3768677	0	0	8.87701E-05	0	4.4385E-05	0	4.4385E-05	4.4385E-05	0	0	1.19068E-09	8.48846E-09	0	9.67914E-09	0.0096791
397566.283768677.28	397566.28	3768677	0	0	9.1731E-05	0	4.58655E-05	0	4.58655E-05	4.58655E-05	0	0	1.23039E-09	8.7716E-09	0	1.0002E-08	0.010002
397666.283768677.28	397666.28	3768677	0	0	8.57033E-05	0	4.28517E-05	0	4.28517E-05	4.28517E-05	0	0	1.14954E-09	8.19521E-09	0	9.34475E-09	0.0093447
397766.283768677.28	397766.28	3768677	0	0	7.33379E-05	0	3.6669E-05	0	3.6669E-05	3.6669E-05	0	0	9.83684E-10	7.01279E-09	0	7.99648E-09	0.0079965
397866.283768677.28	397866.28	3768677	0	0	6.08415E-05	0	3.04208E-05	0	3.04208E-05	3.04208E-05	0	0	8.16069E-10	5.81785E-09	0	6.63392E-09	0.0066339
396166.283768777.28	396166.28	3768777	0	0	8.61569E-06	0	4.30785E-06	0	4.30785E-06	4.30785E-06	0	0	1.15562E-10	8.23858E-10	0	9.39421E-10	0.0009394
396266.283768777.28	396266.28	3768777	0	0	9.59091E-06	0	4.79545E-06	0	4.79545E-06	4.79545E-06	0	0	1.28643E-10	9.17112E-10	0	1.04575E-09	0.0010458
396366.283768777.28	396366.28	3768777	0	0	1.08458E-05	0	5.42292E-06	0	5.42292E-06	5.42292E-06	0	0	1.45476E-10	1.03711E-09	0	1.18259E-09	0.0011826
396466.283768777.28	396466.28	3768777	0	0	1.2257E-05	0	6.1285E-06	0	6.1285E-06	6.1285E-06	0	0	1.64404E-10	1.17205E-09	0	1.33646E-09	0.0013365
396566.283768777.28	396566.28	3768777	0	0	1.39277E-05	0	6.96387E-06	0	6.96387E-06	6.96387E-06	0	0	1.86813E-10	1.33181E-09	0	1.51862E-09	0.0015186
396666.283768777.28	396666.28	3768777	0	0	1.60722E-05	0	8.0361E-06	0	8.0361E-06	8.0361E-06	0	0	2.15577E-10	1.53687E-09	0	1.75245E-09	0.0017524
396766.283768777.28	396766.28	3768777	0	0	1.88114E-05	0	9.40569E-06	0	9.40569E-06	9.40569E-06	0	0	2.52318E-10	1.7988E-09	0	2.05112E-09	0.0020511
396866.283768777.28	396866.28	3768777	0	0	2.23091E-05	0	1.11545E-05	0	1.11545E-05	1.11545E-05	0	0	2.99232E-10	2.13326E-09	0	2.43249E-09	0.0024325
396966.283768777.28	396966.28	3768777	0	0	2.67316E-05	0	1.33658E-05	0	1.33658E-05	1.33658E-05	0	0	3.58551E-10	2.55615E-09	0	2.9147E-09	0.0029147
397066.283768777.28	397066.28	3768777	0	0	3.23561E-05	0	1.6178E-05	0	1.6178E-05	1.6178E-05	0	0	4.33993E-10	3.09399E-09	0	3.52798E-09	0.003528

Garvey Reservoir Rehab - Mitigated Proposed Pump Station - 3rd Trimester Star			Demolition - 2025	Demolition - 2026	Site Preparation - 203	Site Preparation - 202	Grading - 2034	Grading - 2026	Infrastructure - 203	Infrastructure - 203	Paving - 2025	Architectural Coating - 2	Child Risk				
Unique Identifier	X (UTM)	Y (UTM)	1900	1900	2034	1900	2034	1900	2034	2035	1900	1900	3rd Trimester	0<2	2<16	Total	per million
397166.283768777.28	397166.28	3768777	0	0	3.90969E-05	0	1.95485E-05	0	1.95485E-05	1.95485E-05	0	0	5.24408E-10	3.73857E-09	0	4.26297E-09	0.004263
397266.283768777.28	397266.28	3768777	0	0	4.77681E-05	0	2.3884E-05	0	2.3884E-05	2.3884E-05	0	0	6.40714E-10	4.56773E-09	0	5.20844E-09	0.0052084
397366.283768777.28	397366.28	3768777	0	0	5.64594E-05	0	2.82297E-05	0	2.82297E-05	2.82297E-05	0	0	7.57291E-10	5.39881E-09	0	6.1561E-09	0.0061561
397466.283768777.28	397466.28	3768777	0	0	6.3107E-05	0	3.15535E-05	0	3.15535E-05	3.15535E-05	0	0	8.46455E-10	6.03448E-09	0	6.88093E-09	0.0068809
397566.283768777.28	397566.28	3768777	0	0	6.58285E-05	0	3.29143E-05	0	3.29143E-05	3.29143E-05	0	0	8.82959E-10	6.29472E-09	0	7.17768E-09	0.0071777
397666.283768777.28	397666.28	3768777	0	0	6.37244E-05	0	3.18622E-05	0	3.18622E-05	3.18622E-05	0	0	8.54736E-10	6.09351E-09	0	6.94825E-09	0.0069483
397766.283768777.28	397766.28	3768777	0	0	5.76311E-05	0	2.88156E-05	0	2.88156E-05	2.88156E-05	0	0	7.73008E-10	5.51086E-09	0	6.28387E-09	0.0062839
397866.283768777.28	397866.28	3768777	0	0	5.01091E-05	0	2.50545E-05	0	2.50545E-05	2.50545E-05	0	0	6.72114E-10	4.79158E-09	0	5.4637E-09	0.0054637
396166.283768877.28	396166.28	3768877	0	0	8.12682E-06	0	4.06341E-06	0	4.06341E-06	4.06341E-06	0	0	1.09005E-10	7.77111E-10	0	8.86116E-10	0.0008861
396266.283768877.28	396266.28	3768877	0	0	9.04912E-06	0	4.52456E-06	0	4.52456E-06	4.52456E-06	0	0	1.21376E-10	8.65304E-10	0	9.8668E-10	0.0009867
396366.283768877.28	396366.28	3768877	0	0	1.00445E-05	0	5.02225E-06	0	5.02225E-06	5.02225E-06	0	0	1.34727E-10	9.60485E-10	0	1.09521E-09	0.0010952
396466.283768877.28	396466.28	3768877	0	0	1.13775E-05	0	5.68877E-06	0	5.68877E-06	5.68877E-06	0	0	1.52607E-10	1.08796E-09	0	1.24056E-09	0.0012406
396566.283768877.28	396566.28	3768877	0	0	1.28265E-05	0	6.41326E-06	0	6.41326E-06	6.41326E-06	0	0	1.72042E-10	1.22651E-09	0	1.39855E-09	0.0013986
396666.283768877.28	396666.28	3768877	0	0	1.45602E-05	0	7.28012E-06	0	7.28012E-06	7.28012E-06	0	0	1.95297E-10	1.39229E-09	0	1.58759E-09	0.0015876
396766.283768877.28	396766.28	3768877	0	0	1.68383E-05	0	8.41913E-06	0	8.41913E-06	8.41913E-06	0	0	2.25852E-10	1.61013E-09	0	1.83598E-09	0.001836
396866.283768877.28	396866.28	3768877	0	0	1.99101E-05	0	9.95504E-06	0	9.95504E-06	9.95504E-06	0	0	2.67054E-10	1.90386E-09	0	2.17092E-09	0.0021709
396966.283768877.28	396966.28	3768877	0	0	2.32994E-05	0	1.16497E-05	0	1.16497E-05	1.16497E-05	0	0	3.12515E-10	2.22796E-09	0	2.54047E-09	0.0025405
397066.283768877.28	397066.28	3768877	0	0	2.71348E-05	0	1.35674E-05	0	1.35674E-05	1.35674E-05	0	0	3.63959E-10	2.59471E-09	0	2.95867E-09	0.0029587
397166.283768877.28	397166.28	3768877	0	0	3.18219E-05	0	1.59109E-05	0	1.59109E-05	1.59109E-05	0	0	4.26827E-10	3.0429E-09	0	3.46973E-09	0.0034697
397266.283768877.28	397266.28	3768877	0	0	3.74892E-05	0	1.87446E-05	0	1.87446E-05	1.87446E-05	0	0	5.02844E-10	3.58483E-09	0	4.08767E-09	0.0040877
397366.283768877.28	397366.28	3768877	0	0	4.28718E-05	0	2.14359E-05	0	2.14359E-05	2.14359E-05	0	0	5.75041E-10	4.09953E-09	0	4.67457E-09	0.0046746
397466.283768877.28	397466.28	3768877	0	0	4.74228E-05	0	2.37114E-05	0	2.37114E-05	2.37114E-05	0	0	6.36084E-10	4.53471E-09	0	5.1708E-09	0.0051708
397566.283768877.28	397566.28	3768877	0	0	4.97916E-05	0	2.48958E-05	0	2.48958E-05	2.48958E-05	0	0	6.67856E-10	4.76122E-09	0	5.42908E-09	0.0054291
397666.283768877.28	397666.28	3768877	0	0	4.88844E-05	0	2.44422E-05	0	2.44422E-05	2.44422E-05	0	0	6.55688E-10	4.67447E-09	0	5.33016E-09	0.0053302
397766.283768877.28	397766.28	3768877	0	0	4.5742E-05	0	2.2871E-05	0	2.2871E-05	2.2871E-05	0	0	6.13539E-10	4.37399E-09	0	4.98753E-09	0.0049875
397866.283768877.28	397866.28	3768877	0	0	4.13775E-05	0	2.06887E-05	0	2.06887E-05	2.06887E-05	0	0	5.54997E-10	3.95664E-09	0	4.51164E-09	0.0045116
3964253767739	396425	3767739	0	0	1.57093E-05	0	7.85467E-06	0	7.85467E-06	7.85467E-06	0	0	2.1071E-10	1.50217E-09	0	1.71288E-09	0.0017129
3964753767739	396475	3767739	0	0	1.71457E-05	0	8.57285E-06	0	8.57285E-06	8.57285E-06	0	0	2.29976E-10	1.63952E-09	0	1.8695E-09	0.0018695
3965253767739	396525	3767739	0	0	1.86173E-05	0	9.30867E-06	0	9.30867E-06	9.30867E-06	0	0	2.49715E-10	1.78025E-09	0	2.02996E-09	0.00203
3965753767739	396575	3767739	0	0	2.05325E-05	0	1.02663E-05	0	1.02663E-05	1.02663E-05	0	0	2.75403E-10	1.96338E-09	0	2.23878E-09	0.0022388
3966253767739	396625	3767739	0	0	2.22158E-05	0	1.11079E-05	0	1.11079E-05	1.11079E-05	0	0	2.97981E-10	2.12434E-09	0	2.42233E-09	0.0024223
3966753767739	396675	3767739	0	0	2.46803E-05	0	1.23402E-05	0	1.23402E-05	1.23402E-05	0	0	3.31038E-10	2.36001E-09	0	2.69105E-09	0.002691
3967253767739	396725	3767739	0	0	2.82788E-05	0	1.41394E-05	0	1.41394E-05	1.41394E-05	0	0	3.79304E-10	2.70411E-09	0	3.08341E-09	0.0030834
3967753767739	396775	3767739	0	0	3.16404E-05	0	1.58202E-05	0	1.58202E-05	1.58202E-05	0	0	4.24394E-10	3.02555E-09	0	3.44995E-09	0.0034499
3968253767739	396825	3767739	0	0	3.65014E-05	0	1.82507E-05	0	1.82507E-05	1.82507E-05	0	0	4.89594E-10	3.49037E-09	0	3.97997E-09	0.00398
3968753767739	396875	3767739	0	0	4.23552E-05	0	2.11776E-05	0	2.11776E-05	2.11776E-05	0	0	5.68112E-10	4.05013E-09	0	4.61825E-09	0.0046182
3969253767739	396925	3767739	0	0	4.88718E-05	0	2.44359E-05	0	2.44359E-05	2.44359E-05	0	0	6.55519E-10	4.67327E-09	0	5.32879E-09	0.0053288
3969753767739	396975	3767739	0	0	5.64997E-05	0	2.82498E-05	0	2.82498E-05	2.82498E-05	0	0	7.57831E-10	5.40267E-09	0	6.1605E-09	0.0061605
3970253767739	397025	3767739	0	0	6.51305E-05	0	3.25652E-05	0	3.25652E-05	3.25652E-05	0	0	8.73597E-10	6.22797E-09	0	7.10157E-09	0.0071016
3970753767739	397075	3767739	0	0	7.44644E-05	0	3.72322E-05	0	3.72322E-05	3.72322E-05	0	0	9.98792E-10	7.12051E-09	0	8.1193E-09	0.0081193
3971253767739	397125	3767739	0	0	8.45089E-05	0	4.22544E-05	0	4.22544E-05	4.22544E-05	0	0	1.13352E-09	8.08099E-09	0	9.21451E-09	0.0092145
3971753767739	397175	3767739	0	0	9.53093E-05	0	4.76547E-05	0	4.76547E-05	4.76547E-05	0	0	1.27839E-09	9.11377E-09	0	1.03922E-08	0.0103922
3972253767739	397225	3767739	0	0	0.000105545	0	5.27727E-05	0	5.27727E-05	5.27727E-05	0	0	1.41568E-09	1.00926E-08	0	1.15082E-08	0.0115082
3972753767739	397275	3767739	0	0	0.000115416	0	5.7708E-05	0	5.7708E-05	5.7708E-05	0	0	1.54808E-09	1.10364E-08	0	1.25845E-08	0.0125845
3973253767739	397325	3767739	0	0	0.000119299	0	5.96496E-05	0	5.96496E-05	5.96496E-05	0	0	1.60016E-09	1.14077E-08	0	1.30079E-08	0.0130079
3973753767739	397375	3767739	0	0	0.000119022	0	5.9511E-05	0	5.9511E-05	5.9511E-05	0	0	1.59645E-09	1.13812E-08	0	1.29777E-08	0.0129777
3974253767739	397425	3767739	0	0	0.000116391	0	5.81956E-05	0	5.81956E-05	5.81956E-05	0	0	1.56116E-09	1.11297E-08	0	1.26908E-08	0.0126908
3974753767739	397475	3767739	0	0	0.000113821	0	5.69104E-05	0	5.69104E-05	5.69104E-05	0	0	1.52668E-09	1.08839E-08	0	1.24106E-08	0.0124106
3975253767739	397525	3767739	0	0	0.000104999	0	5.24993E-05	0	5.24993E-05	5.24993E-05	0	0	1.40835E-09	1.00403E-08	0	1.14486E-08	0.0114486
3964253767789	396425	3767789	0	0	1.59462E-05	0	7.9731E-06	0	7.9731E-06	7.9731E-06	0	0	2.13887E-10	1.52482E-09	0	1.73871E-09	0.0017387
3964753767789	396475	3767789	0	0	1.73448E-05	0	8.67239E-06	0	8.67239E-06	8.67239E-06	0	0	2.32646E-10	1.65856E-09	0	1.89121E-09	0.0018912
3965253767789	396525	3767789	0	0	1.88693E-05	0	9.43467E-06	0	9.43467E-06	9.43467E-06	0	0	2.53095E-10	1.80434E-09	0	2.05744E-09	0.0020574
3965753767789	396575	3767789	0	0	2.06232E-05	0	1.03116E-05	0	1.03116E-05	1.03116E-05	0	0	2.7662E-10	1.97205E-09	0	2.24867E-09	0.0022487
3966253767789	396625	3767789	0	0	2.28534E-05	0	1.14267E-05	0	1.14267E-05	1.14267E-05	0	0	3.06533E-10	2.18531E-09	0	2.49184E-09	0.0024918
3966753767789	396675	3767789	0	0	2.56808E-05	0	1.28404E-05	0	1.28404E-05	1.28404E-05	0	0	3.44457E-10	2.45567E-09	0	2.80013E-09	0.0028001
3967253767789	396725	3767789	0	0	2.9501E-05	0	1.47505E-05	0	1.47505E-05	1.47505E-05	0	0	3.95697E-10	2.82097E-09	0	3.21667E-09	0.0032167
3967753767789	396775	3767789	0	0	3.35682E-05	0	1.67841E-05	0	1.67841E-05	1.67841E-05	0	0	4.50251E-10	3.20989E-09	0	3.66014E-09	0.0036601
3968253767789	396825	3767789	0	0	3.89105E-05	0	1.94552E-05	0	1.94552E-05	1.94552E-05	0	0	5.21907E-10	3.72074E-09	0	4.24264E-09	0.0042426
3968753767789	396875	3767789	0	0	4.53338E-05	0	2.26669E-05	0	2.26669E-05	2.26669E-05	0	0	6.08063E-10	4.33495E-09	0	4.94302E-09	0.004943
3969253767789	396925	3767789	0	0	5.307E-05	0	2.6535E-05	0	2.6535E-05	2.6535E-05	0	0	7.1183E-10	5.07472E-09	0	5.78655E-09	0.0057865
3969753767789	396975	3767789	0	0	6.27517E-05	0	3.13758E-05	0	3.13758E-05	3.13758E-05	0	0	8.41689E-10	6.0005E-09	0	6.84219E-09	0.0068422
3970253767789	397025	3767789	0	0	7.41998E-05	0	3.70999E-05	0	3.70999E-05	3.70999E-05	0	0	9.95243E-10	7.0952E-09	0	8.09045E-09	0.0080904
3970753767789	397075	3767789	0	0	8.74295E-05	0	4.37147E-05	0	4.37147E-05	4.37147E-05	0	0	1.17269E-09	8.36027E-09	0	9.53296E-09	0.009533
3971253767789	397125	3767789	0	0	0.000102486	0	5.12431E-05	0	5.12431E-05	5.12431E-05	0	0	1.37465E-09	9.80003E-09	0	1.11747E-08	0.0111747
3971753767789	397175	3767789	0	0	0.000119415	0	5.97076E-05	0	5.97076E-05	5.97076E-05	0	0	1.60172E-09	1.14188E-08	0	1.30206E-08	0.0130206
3972253767789	397225	3767789	0	0	0.000136795	0	6.83976E-05	0	6.83976E-05	6.83976E-05	0	0	1.83484E-09	1.30808E-08	0	1.49156E-08	0.0149156
3972753767789	397275	3767789	0	0	0.000155407	0	7.77037E-05	0	7.77037E-05	7.77037E-05	0	0	2.08448E-09	1.48605E-08	0	1.6945E-08	0.016945
3973253767789	397325	3767789	0	0	0.000166588	0	8.32942E-05	0	8.32942E-05	8.32942E-05	0	0	2.23446E-09	1.59297E-08	0	1.81641E-08	0.0181641
3973753767789	397375	3767789	0	0	0.000167886	0	8.39431E-05	0	8.39431E-05	8.39431E-05	0	0	2.25186E-09	1.60538E-08	0	1.83057E-08	0.0183057
3974253767789	397425	3767789	0	0	0.000162798	0	8.13992E-05	0	8.13992E-05	8.13992E-05	0	0	2.18362E-09	1.55673E-08	0	1.77509E-08	0.0177509
3974753767789	397475	3767789	0	0	0.00015735	0	7.86752E-05	0	7.86752E-05	7.86752E-05	0	0	2.11054E-09	1.50463E-08	0	1.71569E-08	0.0171569
3975253767789	397525	3767789	0	0	0.000141286	0	7.06429E-05	0	7.06429E-05	7.06429E-05	0	0	1.89507E-09	1.35102E-08	0	1.54052E-08	0.0154052
3964253767839	396425	3767839	0	0	1.61377E-05	0	8.06886E-06	0	8.06886E-06	8.06886E-06	0	0	2.16456E-10	1.54314E-09	0	1.75959E-09	0.0017596
3964753767839	396475	3767839	0	0	1.76295E-05	0	8.81477E-06	0	8.81477E-06	8.81477E-06	0	0	2.36465E-10	1.68579E-09	0	1.92225E-09	0.0019223
3965253767839	396525	3767839	0	0	1.90533E-05	0	9.52665E-06	0	9.52665E-06	9.52665E-06	0	0	2.55562E-10	1.82193E-09	0	2.0775E-09	0.0020775
3965753767839	396575	3767839	0	0	2.10289E-05	0	1.05145E-05	0	1.05145E-05	1.05145E-05	0	0	2.82062E-10	2.01085E-09	0	2.29291E-09	0.0022929
3966253767839	396625	3767839	0	0	2.34204E-05	0	1.17102E-05	0	1.17102E-05	1.17102E-05	0	0	3.14138E-10	2.23953E-09	0	2.55366E-09	0.0025537

Garvey Reservoir Rehab - Mitigated Proposed Pump Station - 3rd Trimester Star			Demolition - 2025	Demolition - 2026	Site Preparation - 203	Site Preparation - 202	Grading - 2034	Grading - 2026	Infrastructure - 203	Infrastructure - 203	Paving - 2025	Architectural Coating - 2	Child Risk				
Unique Identifier	X (UTM)	Y (UTM)	1900	1900	2034	1900	2034	1900	2034	2035	1900	1900	3rd Trimester	0<2	2<16	Total	per million
3966753767839	396675	3767839	0	0	2.69256E-05	0	1.34628E-05	0	1.34628E-05	1.34628E-05	0	0	3.61154E-10	2.57471E-09	0	2.93586E-09	0.0029359
3967253767839	396725	3767839	0	0	3.06929E-05	0	1.53465E-05	0	1.53465E-05	1.53465E-05	0	0	4.11685E-10	2.93495E-09	0	3.34663E-09	0.0033466
3967753767839	396775	3767839	0	0	3.52288E-05	0	1.76144E-05	0	1.76144E-05	1.76144E-05	0	0	4.72525E-10	3.36869E-09	0	3.84121E-09	0.0038412
3968253767839	396825	3767839	0	0	4.09264E-05	0	2.04632E-05	0	2.04632E-05	2.04632E-05	0	0	5.48947E-10	3.91351E-09	0	4.46245E-09	0.0044625
3968753767839	396875	3767839	0	0	4.80856E-05	0	2.40428E-05	0	2.40428E-05	2.40428E-05	0	0	6.44973E-10	4.59809E-09	0	5.24306E-09	0.0052431
3969253767839	396925	3767839	0	0	5.70641E-05	0	2.85321E-05	0	2.85321E-05	2.85321E-05	0	0	7.65403E-10	5.45664E-09	0	6.22205E-09	0.006222
3969753767839	396975	3767839	0	0	6.8739E-05	0	3.43695E-05	0	3.43695E-05	3.43695E-05	0	0	9.21998E-10	6.57303E-09	0	7.49503E-09	0.007495
3970253767839	397025	3767839	0	0	8.34379E-05	0	4.17189E-05	0	4.17189E-05	4.17189E-05	0	0	1.11915E-09	7.97858E-09	0	9.09774E-09	0.0090977
3970753767839	397075	3767839	0	0	0.000101171	0	5.05854E-05	0	5.05854E-05	5.05854E-05	0	0	1.35701E-09	9.67425E-09	0	1.10313E-08	0.0110313
3971253767839	397125	3767839	0	0	0.000122673	0	6.13367E-05	0	6.13367E-05	6.13367E-05	0	0	1.64542E-09	1.17304E-08	0	1.33758E-08	0.0133758
3971753767839	397175	3767839	0	0	0.000151182	0	7.55908E-05	0	7.55908E-05	7.55908E-05	0	0	2.0278E-09	1.44564E-08	0	1.64842E-08	0.0164842
3972253767839	397225	3767839	0	0	0.000185269	0	9.26344E-05	0	9.26344E-05	9.26344E-05	0	0	2.48502E-09	1.7716E-08	0	2.0201E-08	0.020201
3972753767839	397275	3767839	0	0	0.000219102	0	0.000109551	0	0.000109551	0.000109551	0	0	2.93881E-09	2.09512E-08	0	2.389E-08	0.02389
3973253767839	397325	3767839	0	0	0.00024604	0	0.00012302	0	0.00012302	0.00012302	0	0	3.30014E-09	2.35271E-08	0	2.68272E-08	0.0268272
3973753767839	397375	3767839	0	0	0.000254986	0	0.000127493	0	0.000127493	0.000127493	0	0	3.42013E-09	2.43825E-08	0	2.78026E-08	0.0278026
3974753767839	397475	3767839	0	0	0.000224582	0	0.000112291	0	0.000112291	0.000112291	0	0	3.01233E-09	2.14753E-08	0	2.44876E-08	0.0244876
3975253767839	397525	3767839	0	0	0.000198708	0	9.93538E-05	0	9.93538E-05	9.93538E-05	0	0	2.66527E-09	1.9001E-08	0	2.16663E-08	0.0216663
3964253767889	396425	3767889	0	0	1.62612E-05	0	8.1306E-06	0	8.1306E-06	8.1306E-06	0	0	2.18112E-10	1.55494E-09	0	1.77306E-09	0.0017731
3964753767889	396475	3767889	0	0	1.75439E-05	0	8.77193E-06	0	8.77193E-06	8.77193E-06	0	0	2.35316E-10	1.6776E-09	0	1.91291E-09	0.0019129
3965253767889	396525	3767889	0	0	1.92826E-05	0	9.64131E-06	0	9.64131E-06	9.64131E-06	0	0	2.58638E-10	1.84386E-09	0	2.1025E-09	0.0021025
3965753767889	396575	3767889	0	0	2.14976E-05	0	1.07488E-05	0	1.07488E-05	1.07488E-05	0	0	2.88348E-10	2.05567E-09	0	2.34402E-09	0.002344
3974753767889	397475	3767889	0	0	0.000363426	0	0.000181713	0	0.000181713	0.000181713	0	0	4.87465E-09	3.47519E-08	0	3.96266E-08	0.0396266
3975253767889	397525	3767889	0	0	0.000293964	0	0.000146982	0	0.000146982	0.000146982	0	0	3.94295E-09	2.81097E-08	0	3.20527E-08	0.0320527
3964253767939	396425	3767939	0	0	1.63368E-05	0	8.1684E-06	0	8.1684E-06	8.1684E-06	0	0	2.19126E-10	1.56217E-09	0	1.7813E-09	0.0017813
3964753767939	396475	3767939	0	0	1.76522E-05	0	8.82611E-06	0	8.82611E-06	8.82611E-06	0	0	2.3677E-10	1.68796E-09	0	1.92473E-09	0.0019247
3965253767939	396525	3767939	0	0	1.94893E-05	0	9.74463E-06	0	9.74463E-06	9.74463E-06	0	0	2.6141E-10	1.86362E-09	0	2.12503E-09	0.002125
3974753767939	397475	3767939	0	0	0.000644655	0	0.000322327	0	0.000322327	0.000322327	0	0	8.64677E-09	6.16438E-08	0	7.02906E-08	0.0702906
3975253767939	397525	3767939	0	0	0.000455886	0	0.000227943	0	0.000227943	0.000227943	0	0	6.11481E-09	4.35932E-08	0	4.9708E-08	0.049708
3964253767989	396425	3767989	0	0	1.62158E-05	0	8.10792E-06	0	8.10792E-06	8.10792E-06	0	0	2.17503E-10	1.55061E-09	0	1.76811E-09	0.0017681
3964753767989	396475	3767989	0	0	1.77303E-05	0	8.86516E-06	0	8.86516E-06	8.86516E-06	0	0	2.37817E-10	1.69543E-09	0	1.93324E-09	0.0019332
3974753767989	397475	3767989	0	0	0.001214175	0	0.000607087	0	0.000607087	0.000607087	0	0	1.62858E-08	1.16103E-07	0	1.32389E-07	0.1323888
3975253767989	397525	3767989	0	0	0.000687519	0	0.000343759	0	0.000343759	0.000343759	0	0	9.22171E-09	6.57426E-08	0	7.49643E-08	0.0749643
3964253768039	396425	3768039	0	0	1.61982E-05	0	8.0991E-06	0	8.0991E-06	8.0991E-06	0	0	2.17267E-10	1.54892E-09	0	1.76619E-09	0.0017662
3964753768039	396475	3768039	0	0	1.77807E-05	0	8.89036E-06	0	8.89036E-06	8.89036E-06	0	0	2.38493E-10	1.70025E-09	0	1.93874E-09	0.0019387
3974753768039	397475	3768039	0	0	0.002949	0	0.0014745	0	0.0014745	0.0014745	0	0	3.9555E-08	2.81992E-07	0	3.21547E-07	0.3215473
3975253768039	397525	3768039	0	0	0.001135137	0	0.000567568	0	0.000567568	0.000567568	0	0	1.52256E-08	1.08545E-07	0	1.23771E-07	0.1237708
3964253768089	396425	3768089	0	0	1.6168E-05	0	8.08398E-06	0	8.08398E-06	8.08398E-06	0	0	2.16861E-10	1.54603E-09	0	1.76289E-09	0.0017629
3964753768089	396475	3768089	0	0	1.77757E-05	0	8.88784E-06	0	8.88784E-06	8.88784E-06	0	0	2.38426E-10	1.69976E-09	0	1.93819E-09	0.0019382
3974753768089	397475	3768089	0	0	0.004842922	0	0.002421461	0	0.002421461	0.002421461	0	0	6.49582E-08	4.63095E-07	0	5.28053E-07	0.528053
3975253768089	397525	3768089	0	0	0.00146441	0	0.000732205	0	0.000732205	0.000732205	0	0	1.96422E-08	1.40031E-07	0	1.59673E-07	0.1596735
3964253768139	396425	3768139	0	0	1.62234E-05	0	8.1117E-06	0	8.1117E-06	8.1117E-06	0	0	2.17605E-10	1.55133E-09	0	1.76894E-09	0.0017689
3964753768139	396475	3768139	0	0	1.76421E-05	0	8.82107E-06	0	8.82107E-06	8.82107E-06	0	0	2.36634E-10	1.68699E-09	0	1.92363E-09	0.0019236
3974253768139	397425	3768139	0	0	0.007041004	0	0.003520502	0	0.003520502	0.003520502	0	0	9.44412E-08	6.73282E-07	0	7.67723E-07	0.7677232
3974753768139	397475	3768139	0	0	0.00334027	0	0.001670135	0	0.001670135	0.001670135	0	0	4.48031E-08	3.19407E-07	0	3.6421E-07	0.3642097
3975253768139	397525	3768139	0	0	0.001444286	0	0.000722143	0	0.000722143	0.000722143	0	0	1.93722E-08	1.38107E-07	0	1.57479E-07	0.1574792
3964253768189	396425	3768189	0	0	1.60344E-05	0	8.0172E-06	0	8.0172E-06	8.0172E-06	0	0	2.1507E-10	1.53326E-09	0	1.74833E-09	0.0017483
3964753768189	396475	3768189	0	0	1.74481E-05	0	8.72405E-06	0	8.72405E-06	8.72405E-06	0	0	2.34032E-10	1.66844E-09	0	1.90247E-09	0.0019025
3973753768189	397375	3768189	0	0	0.001887968	0	0.000943984	0	0.000943984	0.000943984	0	0	2.53234E-08	1.80533E-07	0	2.05856E-07	0.2058565
3974253768189	397425	3768189	0	0	0.002186886	0	0.001093443	0	0.001093443	0.001093443	0	0	2.93328E-08	2.09117E-07	0	2.38449E-07	0.2384494
3974753768189	397475	3768189	0	0	0.001863088	0	0.000931544	0	0.000931544	0.000931544	0	0	2.49896E-08	1.78154E-07	0	2.03144E-07	0.2031437
3975253768189	397525	3768189	0	0	0.001157831	0	0.000578916	0	0.000578916	0.000578916	0	0	1.553E-08	1.10715E-07	0	1.26245E-07	0.1262453
3964253768239	396425	3768239	0	0	1.57975E-05	0	7.89877E-06	0	7.89877E-06	7.89877E-06	0	0	2.11893E-10	1.51061E-09	0	1.7225E-09	0.0017225
3964753768239	396475	3768239	0	0	1.71911E-05	0	8.59553E-06	0	8.59553E-06	8.59553E-06	0	0	2.30584E-10	1.64386E-09	0	1.87445E-09	0.0018744
3973753768239	397375	3768239	0	0	0.001005619	0	0.00050281	0	0.00050281	0.00050281	0	0	1.34884E-08	9.61603E-08	0	1.09649E-07	0.1096487
3974253768239	397425	3768239	0	0	0.001046629	0	0.000523314	0	0.000523314	0.000523314	0	0	1.40385E-08	1.00082E-07	0	1.1412E-07	0.1141202
3974753768239	397475	3768239	0	0	0.000971582	0	0.000485791	0	0.000485791	0.000485791	0	0	1.30319E-08	9.29056E-08	0	1.05937E-07	0.1059375
3975253768239	397525	3768239	0	0	0.000760429	0	0.000380214	0	0.000380214	0.000380214	0	0	1.01996E-08	7.27145E-08	0	8.29141E-08	0.0829141
3964253768289	396425	3768289	0	0	1.54926E-05	0	7.74631E-06	0	7.74631E-06	7.74631E-06	0	0	2.07803E-10	1.48145E-09	0	1.68925E-09	0.0016893
3964753768289	396475	3768289	0	0	1.68836E-05	0	8.44181E-06	0	8.44181E-06	8.44181E-06	0	0	2.2646E-10	1.61446E-09	0	1.84092E-09	0.0018409
3973253768289	397325	3768289	0	0	0.000458433	0	0.000229217	0	0.000229217	0.000229217	0	0	6.14898E-09	4.38368E-08	0	4.99858E-08	0.0499858
3973753768289	397375	3768289	0	0	0.000608312	0	0.000304156	0	0.000304156	0.000304156	0	0	8.1593E-09	5.81686E-08	0	6.63279E-08	0.0663279
3974253768289	397425	3768289	0	0	0.000718474	0	0.000359237	0	0.000359237	0.000359237	0	0	9.63691E-09	6.87026E-08	0	7.83395E-08	0.0783395
3974753768289	397475	3768289	0	0	0.000708896	0	0.000354448	0	0.000354448	0.000354448	0	0	9.50843E-09	6.77867E-08	0	7.72952E-08	0.0772952
3975253768289	397525	3768289	0	0	0.00059607	0	0.000298035	0	0.000298035	0.000298035	0	0	7.9951E-09	5.6998E-08	0	6.49931E-08	0.0649931
3964253768339	396425	3768339	0	0	1.52129E-05	0	7.60645E-06	0	7.60645E-06	7.60645E-06	0	0	2.04051E-10	1.4547E-09	0	1.65875E-09	0.0016588
3964753768339	396475	3768339	0	0	1.65359E-05	0	8.26794E-06	0	8.26794E-06	8.26794E-06	0	0	2.21796E-10	1.58121E-09	0	1.80301E-09	0.001803
3965253768339	396525	3768339	0	0	1.81663E-05	0	9.08314E-06	0	9.08314E-06	9.08314E-06	0	0	2.43665E-10	1.73711E-09	0	1.98078E-09	0.0019808
3972753768339	397275	3768339	0	0	0.000248749	0	0.000124374	0	0.000124374	0.000124374	0	0	3.33647E-09	2.37861E-08	0	2.71226E-08	0.0271226
3973253768339	397325	3768339	0	0	0.000325725	0	0.000162863	0	0.000162863	0.000162863	0	0	4.36896E-09	3.11469E-08	0	3.55158E-08	0.0355158
3973753768339	397375	3768339	0	0	0.000406485	0	0.000203242	0	0.000203242	0.000203242	0	0	5.45219E-09	3.88693E-08	0	4.43215E-08	0.0443215
3974253768339	397425	3768339	0	0	0.000468954	0	0.000234477	0	0.000234477	0.000234477	0	0	6.29009E-09	4.48428E-08	0	5.11329E-08	0.0511329
3974753768339	397475	3768339	0	0	0.000482128	0	0.000241064	0	0.000241064	0.000241064	0	0	6.4668E-09	4.61026E-08	0	5.25694E-08	0.0525694
3975253768339	397525	3768339	0	0	0.000444848	0	0.000222424	0	0.000222424	0.000222424	0	0	5.96676E-09	4.25377E-08	0	4.85045E-08	0.0485045
3964253768389	396425	3768389	0	0	1.48576E-05	0	7.4288E-06	0	7.4288E-06	7.4288E-06	0	0	1.99285E-10	1.42073E-09	0	1.62001E-09	0.00162
3964753768389	396475	3768389	0	0	1.61352E-05	0	8.0676E-06	0	8.0676E-06	8.0676E-06	0	0	2.16422E-10	1.5429E-09	0	1.75932E-09	0.0017593
3965253768389	396525	3768389	0	0	1.76673E-05	0	8.83367E-06	0	8.83367E-06	8.83367E-06	0	0	2.36972E-10	1.6894E-09	0	1.92638E-09	0.0019264
3972253768389	397225	3768389	0	0	0.000153215	0	7.66076E-05	0	7.66076E-05	7.66076E-05	0	0	2.05508E-09	1.46509E-08	0	1.6706E-08	0.016706

Garvey Reservoir Rehab - Mitigated Proposed Pump Station - 3rd Trimester Star			Demolition - 2025	Demolition - 2026	Site Preparation - 203	Site Preparation - 202	Grading - 2034	Grading - 2026	Infrastructure - 203	Infrastructure - 203	Paving - 2025	Architectural Coating - 2	Child Risk				
Unique Identifier	X (UTM)	Y (UTM)	1900	1900	2034	1900	2034	1900	2034	2035	1900	1900	3rd Trimester	0<2	2<16	Total	per million
3972753768389	397275	3768389	0	0	0.000193595	0	9.67974E-05	0	9.67974E-05	9.67974E-05	0	0	2.59669E-09	1.85121E-08	0	2.11088E-08	0.0211088
3973253768389	397325	3768389	0	0	0.000241844	0	0.000120922	0	0.000120922	0.000120922	0	0	3.24386E-09	2.31259E-08	0	2.63697E-08	0.0263697
3973753768389	397375	3768389	0	0	0.000290282	0	0.000145141	0	0.000145141	0.000145141	0	0	3.89357E-09	2.77577E-08	0	3.16512E-08	0.0316512
3974253768389	397425	3768389	0	0	0.000326786	0	0.000163393	0	0.000163393	0.000163393	0	0	4.38319E-09	3.12483E-08	0	3.56315E-08	0.0356315
3974753768389	397475	3768389	0	0	0.000339741	0	0.000169871	0	0.000169871	0.000169871	0	0	4.55696E-09	3.24871E-08	0	3.70441E-08	0.0370441
3975253768389	397525	3768389	0	0	0.000324647	0	0.000162323	0	0.000162323	0.000162323	0	0	4.3545E-09	3.10437E-08	0	3.53982E-08	0.0353982
3964253768439	396425	3768439	0	0	1.4535E-05	0	7.26752E-06	0	7.26752E-06	7.26752E-06	0	0	1.94959E-10	1.38988E-09	0	1.58484E-09	0.0015848
3964753768439	396475	3768439	0	0	1.57068E-05	0	7.85341E-06	0	7.85341E-06	7.85341E-06	0	0	2.10676E-10	1.50193E-09	0	1.71261E-09	0.0017126
3965253768439	396525	3768439	0	0	1.71306E-05	0	8.56529E-06	0	8.56529E-06	8.56529E-06	0	0	2.29773E-10	1.63808E-09	0	1.86785E-09	0.0018679
3971753768439	397175	3768439	0	0	0.000100485	0	5.02427E-05	0	5.02427E-05	5.02427E-05	0	0	1.34781E-09	9.60871E-09	0	1.09565E-08	0.0109565
3972253768439	397225	3768439	0	0	0.000125964	0	6.29822E-05	0	6.29822E-05	6.29822E-05	0	0	1.68956E-09	1.20451E-08	0	1.37347E-08	0.0137347
3972753768439	397275	3768439	0	0	0.000153825	0	7.69125E-05	0	7.69125E-05	7.69125E-05	0	0	2.06326E-09	1.47092E-08	0	1.67725E-08	0.0167725
3973253768439	397325	3768439	0	0	0.000186186	0	9.3093E-05	0	9.3093E-05	9.3093E-05	0	0	2.49732E-09	1.78037E-08	0	2.0301E-08	0.020301
3973753768439	397375	3768439	0	0	0.000218388	0	0.000109194	0	0.000109194	0.000109194	0	0	2.92925E-09	2.0883E-08	0	2.38122E-08	0.0238122
3974253768439	397425	3768439	0	0	0.000243933	0	0.000121967	0	0.000121967	0.000121967	0	0	3.27188E-09	2.33256E-08	0	2.65975E-08	0.0265975
3974753768439	397475	3768439	0	0	0.000253406	0	0.000126703	0	0.000126703	0.000126703	0	0	3.39894E-09	2.42314E-08	0	2.76303E-08	0.0276303
3975253768439	397525	3768439	0	0	0.000247343	0	0.000123671	0	0.000123671	0.000123671	0	0	3.31761E-09	2.36516E-08	0	2.69693E-08	0.0269693
3964253768489	396425	3768489	0	0	1.41218E-05	0	7.06088E-06	0	7.06088E-06	7.06088E-06	0	0	1.89416E-10	1.35037E-09	0	1.53978E-09	0.0015398
3964753768489	396475	3768489	0	0	1.52356E-05	0	7.61779E-06	0	7.61779E-06	7.61779E-06	0	0	2.04355E-10	1.45687E-09	0	1.66123E-09	0.0016612
3965253768489	396525	3768489	0	0	1.65787E-05	0	8.28936E-06	0	8.28936E-06	8.28936E-06	0	0	2.22371E-10	1.58531E-09	0	1.80768E-09	0.0018077
3970753768489	397075	3768489	0	0	6.01486E-05	0	3.00743E-05	0	3.00743E-05	3.00743E-05	0	0	8.06774E-10	5.75159E-09	0	6.55836E-09	0.0065584
3971253768489	397125	3768489	0	0	7.10272E-05	0	3.55136E-05	0	3.55136E-05	3.55136E-05	0	0	9.52689E-10	6.79183E-09	0	7.74452E-09	0.0077445
3971753768489	397175	3768489	0	0	8.53052E-05	0	4.26526E-05	0	4.26526E-05	4.26526E-05	0	0	1.1442E-09	8.15714E-09	0	9.30134E-09	0.0093013
3972253768489	397225	3768489	0	0	0.000103575	0	5.17874E-05	0	5.17874E-05	5.17874E-05	0	0	1.38925E-09	9.90413E-09	0	1.12934E-08	0.0112934
3972753768489	397275	3768489	0	0	0.0001248	0	6.24001E-05	0	6.24001E-05	6.24001E-05	0	0	1.67395E-09	1.19338E-08	0	1.36077E-08	0.0136077
3973253768489	397325	3768489	0	0	0.000146998	0	7.34992E-05	0	7.34992E-05	7.34992E-05	0	0	1.97169E-09	1.40564E-08	0	1.60281E-08	0.0160281
3973753768489	397375	3768489	0	0	0.000168667	0	8.43337E-05	0	8.43337E-05	8.43337E-05	0	0	2.26234E-09	1.61285E-08	0	1.83908E-08	0.0183908
3974253768489	397425	3768489	0	0	0.000186211	0	9.31056E-05	0	9.31056E-05	9.31056E-05	0	0	2.49766E-09	1.78061E-08	0	2.03037E-08	0.0203037
3974753768489	397475	3768489	0	0	0.000196127	0	9.80636E-05	0	9.80636E-05	9.80636E-05	0	0	2.63066E-09	1.87543E-08	0	2.13849E-08	0.0213849
3975253768489	397525	3768489	0	0	0.000195563	0	9.77814E-05	0	9.77814E-05	9.77814E-05	0	0	2.62309E-09	1.87003E-08	0	2.13234E-08	0.0213234
3964253768539	396425	3768539	0	0	1.36959E-05	0	6.84795E-06	0	6.84795E-06	6.84795E-06	0	0	1.83703E-10	1.30964E-09	0	1.49335E-09	0.0014933
3964753768539	396475	3768539	0	0	1.47593E-05	0	7.37966E-06	0	7.37966E-06	7.37966E-06	0	0	1.97967E-10	1.41133E-09	0	1.6093E-09	0.0016093
3965253768539	396525	3768539	0	0	1.59941E-05	0	7.99704E-06	0	7.99704E-06	7.99704E-06	0	0	2.14529E-10	1.5294E-09	0	1.74393E-09	0.0017439
3965753768539	396575	3768539	0	0	1.74683E-05	0	8.73413E-06	0	8.73413E-06	8.73413E-06	0	0	2.34302E-10	1.67037E-09	0	1.90467E-09	0.0019047
3970253768539	397025	3768539	0	0	4.65283E-05	0	2.32641E-05	0	2.32641E-05	2.32641E-05	0	0	6.24085E-10	4.44917E-09	0	5.07326E-09	0.0050733
3970753768539	397075	3768539	0	0	5.37983E-05	0	2.68991E-05	0	2.68991E-05	2.68991E-05	0	0	7.21598E-10	5.14435E-09	0	5.86595E-09	0.005866
3971253768539	397125	3768539	0	0	6.25475E-05	0	3.12738E-05	0	3.12738E-05	3.12738E-05	0	0	8.38952E-10	5.98098E-09	0	6.81994E-09	0.0068199
3971753768539	397175	3768539	0	0	7.36555E-05	0	3.68277E-05	0	3.68277E-05	3.68277E-05	0	0	9.87942E-10	7.04316E-09	0	8.0311E-09	0.0080311
3972253768539	397225	3768539	0	0	8.67566E-05	0	4.33783E-05	0	4.33783E-05	4.33783E-05	0	0	1.16367E-09	8.29593E-09	0	9.4596E-09	0.0094596
3972753768539	397275	3768539	0	0	0.000103053	0	5.15266E-05	0	5.15266E-05	5.15266E-05	0	0	1.38225E-09	9.85425E-09	0	1.12365E-08	0.0112365
3973253768539	397325	3768539	0	0	0.000118853	0	5.94266E-05	0	5.94266E-05	5.94266E-05	0	0	1.59418E-09	1.13651E-08	0	1.29593E-08	0.0129593
3973753768539	397375	3768539	0	0	0.000134119	0	6.70595E-05	0	6.70595E-05	6.70595E-05	0	0	1.79894E-09	1.28249E-08	0	1.46238E-08	0.0146238
3974253768539	397425	3768539	0	0	0.000146497	0	7.32485E-05	0	7.32485E-05	7.32485E-05	0	0	1.96497E-09	1.40085E-08	0	1.59734E-08	0.0159734
3974753768539	397475	3768539	0	0	0.000154488	0	7.72439E-05	0	7.72439E-05	7.72439E-05	0	0	2.07215E-09	1.47726E-08	0	1.68447E-08	0.0168447
3975253768539	397525	3768539	0	0	0.000156098	0	7.8049E-05	0	7.8049E-05	7.8049E-05	0	0	2.09375E-09	1.49266E-08	0	1.70203E-08	0.0170203
3964253768589	396425	3768589	0	0	1.32776E-05	0	6.63879E-06	0	6.63879E-06	6.63879E-06	0	0	1.78093E-10	1.26964E-09	0	1.44774E-09	0.0014477
3964753768589	396475	3768589	0	0	1.42654E-05	0	7.1327E-06	0	7.1327E-06	7.1327E-06	0	0	1.91342E-10	1.3641E-09	0	1.55544E-09	0.0015554
3965253768589	396525	3768589	0	0	1.54397E-05	0	7.71985E-06	0	7.71985E-06	7.71985E-06	0	0	2.07093E-10	1.47639E-09	0	1.68348E-09	0.0016835
3965753768589	396575	3768589	0	0	1.67501E-05	0	8.37504E-06	0	8.37504E-06	8.37504E-06	0	0	2.24669E-10	1.60169E-09	0	1.82636E-09	0.0018264
3966253768589	396625	3768589	0	0	1.82368E-05	0	9.11842E-06	0	9.11842E-06	9.11842E-06	0	0	2.44611E-10	1.74386E-09	0	1.98847E-09	0.0019885
3968253768589	396825	3768589	0	0	2.66938E-05	0	1.33469E-05	0	1.33469E-05	1.33469E-05	0	0	3.58044E-10	2.55254E-09	0	2.91058E-09	0.0029106
3968753768589	396875	3768589	0	0	2.97631E-05	0	1.48815E-05	0	1.48815E-05	1.48815E-05	0	0	3.99213E-10	2.84603E-09	0	3.24525E-09	0.0032452
3969253768589	396925	3768589	0	0	3.31574E-05	0	1.65787E-05	0	1.65787E-05	1.65787E-05	0	0	4.44741E-10	3.17061E-09	0	3.61535E-09	0.0036154
3969753768589	396975	3768589	0	0	3.75623E-05	0	1.87811E-05	0	1.87811E-05	1.87811E-05	0	0	5.03824E-10	3.59182E-09	0	4.09564E-09	0.0040956
3970253768589	397025	3768589	0	0	4.26425E-05	0	2.13212E-05	0	2.13212E-05	2.13212E-05	0	0	5.71965E-10	4.0776E-09	0	4.64957E-09	0.0046496
3970753768589	397075	3768589	0	0	4.83603E-05	0	2.41801E-05	0	2.41801E-05	2.41801E-05	0	0	6.48657E-10	4.62435E-09	0	5.27301E-09	0.005273
3971253768589	397125	3768589	0	0	5.57588E-05	0	2.78794E-05	0	2.78794E-05	2.78794E-05	0	0	7.47894E-10	5.33183E-09	0	6.07972E-09	0.0060797
3971753768589	397175	3768589	0	0	6.43039E-05	0	3.2152E-05	0	3.2152E-05	3.2152E-05	0	0	8.6251E-10	6.14894E-09	0	7.01145E-09	0.0070114
3972253768589	397225	3768589	0	0	7.39402E-05	0	3.69701E-05	0	3.69701E-05	3.69701E-05	0	0	9.91762E-10	7.07039E-09	0	8.06215E-09	0.0080621
3972753768589	397275	3768589	0	0	8.48793E-05	0	4.24396E-05	0	4.24396E-05	4.24396E-05	0	0	1.13849E-09	8.11641E-09	0	9.2549E-09	0.0092549
3973253768589	397325	3768589	0	0	9.79074E-05	0	4.89537E-05	0	4.89537E-05	4.89537E-05	0	0	1.31323E-09	9.3622E-09	0	1.06754E-08	0.0106754
3973753768589	397375	3768589	0	0	0.000109038	0	5.4519E-05	0	5.4519E-05	5.4519E-05	0	0	1.46253E-09	1.04265E-08	0	1.18891E-08	0.0118891
3974253768589	397425	3768589	0	0	0.000118195	0	5.90977E-05	0	5.90977E-05	5.90977E-05	0	0	1.58536E-09	1.13022E-08	0	1.28876E-08	0.0128876
3974753768589	397475	3768589	0	0	0.000124521	0	6.22603E-05	0	6.22603E-05	6.22603E-05	0	0	1.6702E-09	1.1907E-08	0	1.35772E-08	0.0135772
3975253768589	397525	3768589	0	0	0.00012671	0	6.33552E-05	0	6.33552E-05	6.33552E-05	0	0	1.69957E-09	1.21164E-08	0	1.3816E-08	0.013816
3964253768639	396425	3768639	0	0	1.28467E-05	0	6.42334E-06	0	6.42334E-06	6.42334E-06	0	0	1.72313E-10	1.22844E-09	0	1.40075E-09	0.0014008
3964753768639	396475	3768639	0	0	1.37488E-05	0	6.87441E-06	0	6.87441E-06	6.87441E-06	0	0	1.84413E-10	1.3147E-09	0	1.49912E-09	0.0014991
3965253768639	396525	3768639	0	0	1.48475E-05	0	7.42376E-06	0	7.42376E-06	7.42376E-06	0	0	1.9915E-10	1.41976E-09	0	1.61891E-09	0.0016189
3965753768639	396575	3768639	0	0	1.6042E-05	0	8.02098E-06	0	8.02098E-06	8.02098E-06	0	0	2.15171E-10	1.53398E-09	0	1.74915E-09	0.0017492
3966253768639	396625	3768639	0	0	1.73927E-05	0	8.69633E-06	0	8.69633E-06	8.69633E-06	0	0	2.33288E-10	1.66314E-09	0	1.89643E-09	0.0018964
3966753768639	396675	3768639	0	0	1.89298E-05	0	9.46491E-06	0	9.46491E-06	9.46491E-06	0	0	2.53906E-10	1.81013E-09	0	2.06403E-09	0.002064
3967253768639	396725	3768639	0	0	2.06887E-05	0	1.03444E-05	0	1.03444E-05	1.03444E-05	0	0	2.77499E-10	1.97832E-09	0	2.25582E-09	0.0022558
3967753768639	396775	3768639	0	0	2.26845E-05	0	1.13423E-05	0	1.13423E-05	1.13423E-05	0	0	3.04268E-10	2.16916E-09	0	2.47343E-09	0.0024734
3968253768639	396825	3768639	0	0	2.5013E-05	0	1.25065E-05	0	1.25065E-05	1.25065E-05	0	0	3.355E-10	2.39182E-09	0	2.72731E-09	0.0027273
3968753768639	396875	3768639	0	0	2.76614E-05	0	1.38307E-05	0	1.38307E-05	1.38307E-05	0	0	3.71023E-10	2.64507E-09	0	3.01609E-09	0.0030161
3969253768639	396925	3768639	0	0	3.07232E-05	0	1.53616E-05	0	1.53616E-05	1.53616E-05	0	0	4.1209E-10	2.93784E-09	0	3.34993E-09	0.0033499
3969753768639	396975	3768639	0	0	3.44476E-05	0	1.72238E-05	0	1.72238E-05	1.72238E-05	0	0	4.62047E-10	3.29399E-09	0	3.75603E-09	0.003756

Garvey Reservoir Rehab - Mitigated Proposed Pump Station - 3rd Trimester Star			Demolition - 2025	Demolition - 2026	Site Preparation - 203	Site Preparation - 202	Grading - 2034	Grading - 2026	Infrastructure - 203	Infrastructure - 203	Paving - 2025	Architectural Coating - 2	Child Risk				
Unique Identifier	X (UTM)	Y (UTM)	1900	1900	2034	1900	2034	1900	2034	2035	1900	1900	3rd Trimester	0<2	2<16	Total	per million
3970253768639	397025	3768639	0	0	3.86988E-05	0	1.93494E-05	0	1.93494E-05	1.93494E-05	0	0	5.19068E-10	3.70049E-09	0	4.21956E-09	0.0042196
3970753768639	397075	3768639	0	0	4.33985E-05	0	2.16992E-05	0	2.16992E-05	2.16992E-05	0	0	5.82105E-10	4.14989E-09	0	4.732E-09	0.004732
3971253768639	397125	3768639	0	0	4.84863E-05	0	2.42431E-05	0	2.42431E-05	2.42431E-05	0	0	6.50347E-10	4.6364E-09	0	5.28675E-09	0.0052867
3971753768639	397175	3768639	0	0	5.59554E-05	0	2.79777E-05	0	2.79777E-05	2.79777E-05	0	0	7.50531E-10	5.35062E-09	0	6.10115E-09	0.0061012
3972253768639	397225	3768639	0	0	6.36664E-05	0	3.18332E-05	0	3.18332E-05	3.18332E-05	0	0	8.53959E-10	6.08797E-09	0	6.94193E-09	0.0069419
3972753768639	397275	3768639	0	0	7.23602E-05	0	3.61801E-05	0	3.61801E-05	3.61801E-05	0	0	9.70569E-10	6.9193E-09	0	7.88987E-09	0.0078899
3973253768639	397325	3768639	0	0	8.1747E-05	0	4.08735E-05	0	4.08735E-05	4.08735E-05	0	0	1.09647E-09	7.81689E-09	0	8.91337E-09	0.0089134
3973753768639	397375	3768639	0	0	9.01082E-05	0	4.50541E-05	0	4.50541E-05	4.50541E-05	0	0	1.20862E-09	8.61641E-09	0	9.82504E-09	0.009825
3974253768639	397425	3768639	0	0	9.75445E-05	0	4.87723E-05	0	4.87723E-05	4.87723E-05	0	0	1.30837E-09	9.3275E-09	0	1.06359E-08	0.0106359
3974753768639	397475	3768639	0	0	0.000102363	0	5.11813E-05	0	5.11813E-05	5.11813E-05	0	0	1.37299E-09	9.78823E-09	0	1.11612E-08	0.0111612
3975253768639	397525	3768639	0	0	0.000104691	0	5.23455E-05	0	5.23455E-05	5.23455E-05	0	0	1.40422E-09	1.00109E-08	0	1.14151E-08	0.0114151
3964253768689	396425	3768689	0	0	1.23502E-05	0	6.17512E-06	0	6.17512E-06	6.17512E-06	0	0	1.65654E-10	1.18097E-09	0	1.34662E-09	0.0013466
3964753768689	396475	3768689	0	0	1.32347E-05	0	6.61737E-06	0	6.61737E-06	6.61737E-06	0	0	1.77518E-10	1.26555E-09	0	1.44306E-09	0.0014431
3965253768689	396525	3768689	0	0	1.42024E-05	0	7.1012E-06	0	7.1012E-06	7.1012E-06	0	0	1.90497E-10	1.35808E-09	0	1.54857E-09	0.0015486
3965753768689	396575	3768689	0	0	1.53213E-05	0	7.66063E-06	0	7.66063E-06	7.66063E-06	0	0	2.05504E-10	1.46507E-09	0	1.67057E-09	0.0016706
3966253768689	396625	3768689	0	0	1.65308E-05	0	8.26542E-06	0	8.26542E-06	8.26542E-06	0	0	2.21728E-10	1.58073E-09	0	1.80246E-09	0.0018025
3966753768689	396675	3768689	0	0	1.79244E-05	0	8.96218E-06	0	8.96218E-06	8.96218E-06	0	0	2.4042E-10	1.71398E-09	0	1.9544E-09	0.0019544
3967253768689	396725	3768689	0	0	1.9459E-05	0	9.72951E-06	0	9.72951E-06	9.72951E-06	0	0	2.61004E-10	1.86073E-09	0	2.12173E-09	0.0021217
3967753768689	396775	3768689	0	0	2.1228E-05	0	1.0614E-05	0	1.0614E-05	1.0614E-05	0	0	2.84732E-10	2.02989E-09	0	2.31462E-09	0.0023146
3968253768689	396825	3768689	0	0	2.32591E-05	0	1.16295E-05	0	1.16295E-05	1.16295E-05	0	0	3.11975E-10	2.2241E-09	0	2.53608E-09	0.0025361
3968753768689	396875	3768689	0	0	2.56404E-05	0	1.28202E-05	0	1.28202E-05	1.28202E-05	0	0	3.43916E-10	2.45182E-09	0	2.79573E-09	0.0027957
3969253768689	396925	3768689	0	0	2.83242E-05	0	1.41621E-05	0	1.41621E-05	1.41621E-05	0	0	3.79913E-10	2.70844E-09	0	3.08836E-09	0.0030884
3969753768689	396975	3768689	0	0	3.14363E-05	0	1.57182E-05	0	1.57182E-05	1.57182E-05	0	0	4.21656E-10	3.00603E-09	0	3.42769E-09	0.0034277
3970253768689	397025	3768689	0	0	3.50549E-05	0	1.75275E-05	0	1.75275E-05	1.75275E-05	0	0	4.70193E-10	3.35206E-09	0	3.82225E-09	0.0038223
3970753768689	397075	3768689	0	0	3.92759E-05	0	1.96379E-05	0	1.96379E-05	1.96379E-05	0	0	5.26808E-10	3.75568E-09	0	4.28248E-09	0.0042825
3971253768689	397125	3768689	0	0	4.32725E-05	0	2.16362E-05	0	2.16362E-05	2.16362E-05	0	0	5.80415E-10	4.13785E-09	0	4.71826E-09	0.0047183
3971753768689	397175	3768689	0	0	4.91389E-05	0	2.45695E-05	0	2.45695E-05	2.45695E-05	0	0	6.59101E-10	4.69881E-09	0	5.35791E-09	0.0053579
3972253768689	397225	3768689	0	0	5.55295E-05	0	2.77647E-05	0	2.77647E-05	2.77647E-05	0	0	7.44818E-10	5.3099E-09	0	6.05472E-09	0.0060547
3972753768689	397275	3768689	0	0	6.21645E-05	0	3.10823E-05	0	3.10823E-05	3.10823E-05	0	0	8.33814E-10	5.94436E-09	0	6.77817E-09	0.0067782
3973253768689	397325	3768689	0	0	6.92002E-05	0	3.46001E-05	0	3.46001E-05	3.46001E-05	0	0	9.28184E-10	6.61713E-09	0	7.54531E-09	0.0075453
3973753768689	397375	3768689	0	0	7.59436E-05	0	3.79718E-05	0	3.79718E-05	3.79718E-05	0	0	1.01863E-09	7.26195E-09	0	8.28058E-09	0.0082806
3974253768689	397425	3768689	0	0	8.16412E-05	0	4.08206E-05	0	4.08206E-05	4.08206E-05	0	0	1.09505E-09	7.80677E-09	0	8.90183E-09	0.0089018
3974753768689	397475	3768689	0	0	8.58696E-05	0	4.29348E-05	0	4.29348E-05	4.29348E-05	0	0	1.15177E-09	8.21111E-09	0	9.36288E-09	0.0093629
3975253768689	397525	3768689	0	0	8.80973E-05	0	4.40486E-05	0	4.40486E-05	4.40486E-05	0	0	1.18165E-09	8.42412E-09	0	9.60578E-09	0.0096058

Garvey Reservoir Rehab - Mitigated Proposed Pump Station - 3rd Trimester Start

Offroad DPM Emissions, Ground Level Concentrations and Health Risk Calculations

Residential Receptors

Phase	Year	Emissions (lbs/day)	Meters	lbs/meter	meters (h1)	lbs/day (H1)	g/s (H1)	meters (h2)	lbs/day (H2)	g/s (H2)	hrs/day
Demolition - 2025	1900		1932.1	0	691.2	0	0	1240.9	0	0	10.00
Demolition - 2026	1900		1932.1	0	691.2	0	0	1240.9	0	0	10.00
Site Preparation - 2034	2034	0.0000	1932.1	0	691.2	0	0	1240.9	0	0	10.00
Site Preparation - 2026	1900		1932.1	0	691.2	0	0	1240.9	0	0	10.00
Grading - 2034	2034	0.0000	1932.1	0	691.2	0	0	1240.9	0	0	10.00
Grading - 2026	1900		1932.1	0	691.2	0	0	1240.9	0	0	10.00
Infrastructure - 2034	2034	0.0000	1932.1	0	691.2	0	0	1240.9	0	0	10.00
Infrastructure - 2035	2035	0.0000	1932.1	0	691.2	0	0	1240.9	0	0	10.00
Paving - 2025	1900		1932.1	0	691.2	0	0	1240.9	0	0	10.00
Architectural Coating - 2026	1900		1932.1	0	691.2	0	0	1240.9	0	0	10.00

		AERMOD Column Identifier:	*5*	*5*	*5*	*5*	*5*	*5*	*5*	*5*	*5*	*5*						
			6	*6*	*6*	*6*	*6*	*6*	*6*	*6*	*6*	*6*					*MAX:*	0
Garvey Reservoir Rehab - Mitigated Proposed Pump Station - 3rd Trimester Star			Demolition - 2025	Demolition - 2026	Site Preparation - 2034	te Preparation - 20	Grading - 2034	Grading - 2026	Infrastructure - 2034	nfrastructure - 203	Paving - 2025	rchitectural Coating - 202	Child Risk					
Unique Identifier	X (UTM)	Y (UTM)	1900	1900	2034	1900	2034	1900	2034	2035	1900	1900	3rd Trimester	0<2	2<16	Total	per million	
396166.283767377.2	396166.28	3767377	0	0	0	0	0	0	0	0	0	0	0	0	0	0	0	
396266.283767377.2	396266.28	3767377	0	0	0	0	0	0	0	0	0	0	0	0	0	0	0	
396366.283767377.2	396366.28	3767377	0	0	0	0	0	0	0	0	0	0	0	0	0	0	0	
396466.283767377.2	396466.28	3767377	0	0	0	0	0	0	0	0	0	0	0	0	0	0	0	
396566.283767377.2	396566.28	3767377	0	0	0	0	0	0	0	0	0	0	0	0	0	0	0	
396666.283767377.2	396666.28	3767377	0	0	0	0	0	0	0	0	0	0	0	0	0	0	0	
396766.283767377.2	396766.28	3767377	0	0	0	0	0	0	0	0	0	0	0	0	0	0	0	
396866.283767377.2	396866.28	3767377	0	0	0	0	0	0	0	0	0	0	0	0	0	0	0	
396966.283767377.2	396966.28	3767377	0	0	0	0	0	0	0	0	0	0	0	0	0	0	0	
397066.283767377.2	397066.28	3767377	0	0	0	0	0	0	0	0	0	0	0	0	0	0	0	
397166.283767377.2	397166.28	3767377	0	0	0	0	0	0	0	0	0	0	0	0	0	0	0	
397266.283767377.2	397266.28	3767377	0	0	0	0	0	0	0	0	0	0	0	0	0	0	0	
397366.283767377.2	397366.28	3767377	0	0	0	0	0	0	0	0	0	0	0	0	0	0	0	
397466.283767377.2	397466.28	3767377	0	0	0	0	0	0	0	0	0	0	0	0	0	0	0	
397566.283767377.2	397566.28	3767377	0	0	0	0	0	0	0	0	0	0	0	0	0	0	0	
397666.283767377.2	397666.28	3767377	0	0	0	0	0	0	0	0	0	0	0	0	0	0	0	
397766.283767377.2	397766.28	3767377	0	0	0	0	0	0	0	0	0	0	0	0	0	0	0	
397866.283767377.2	397866.28	3767377	0	0	0	0	0	0	0	0	0	0	0	0	0	0	0	
396166.283767477.2	396166.28	3767477	0	0	0	0	0	0	0	0	0	0	0	0	0	0	0	
396266.283767477.2	396266.28	3767477	0	0	0	0	0	0	0	0	0	0	0	0	0	0	0	
396366.283767477.2	396366.28	3767477	0	0	0	0	0	0	0	0	0	0	0	0	0	0	0	
396466.283767477.2	396466.28	3767477	0	0	0	0	0	0	0	0	0	0	0	0	0	0	0	
396566.283767477.2	396566.28	3767477	0	0	0	0	0	0	0	0	0	0	0	0	0	0	0	
396666.283767477.2	396666.28	3767477	0	0	0	0	0	0	0	0	0	0	0	0	0	0	0	
396766.283767477.2	396766.28	3767477	0	0	0	0	0	0	0	0	0	0	0	0	0	0	0	
396866.283767477.2	396866.28	3767477	0	0	0	0	0	0	0	0	0	0	0	0	0	0	0	
396966.283767477.2	396966.28	3767477	0	0	0	0	0	0	0	0	0	0	0	0	0	0	0	
397066.283767477.2	397066.28	3767477	0	0	0	0	0	0	0	0	0	0	0	0	0	0	0	
397166.283767477.2	397166.28	3767477	0	0	0	0	0	0	0	0	0	0	0	0	0	0	0	
397266.283767477.2	397266.28	3767477	0	0	0	0	0	0	0	0	0	0	0	0	0	0	0	
397366.283767477.2	397366.28	3767477	0	0	0	0	0	0	0	0	0	0	0	0	0	0	0	
397466.283767477.2	397466.28	3767477	0	0	0	0	0	0	0	0	0	0	0	0	0	0	0	
397566.283767477.2	397566.28	3767477	0	0	0	0	0	0	0	0	0	0	0	0	0	0	0	
397666.283767477.2	397666.28	3767477	0	0	0	0	0	0	0	0	0	0	0	0	0	0	0	
397766.283767477.2	397766.28	3767477	0	0	0	0	0	0	0	0	0	0	0	0	0	0	0	
397866.283767477.2	397866.28	3767477	0	0	0	0	0	0	0	0	0	0	0	0	0	0	0	
396166.283767577.2	396166.28	3767577	0	0	0	0	0	0	0	0	0	0	0	0	0	0	0	
396266.283767577.2	396266.28	3767577	0	0	0	0	0	0	0	0	0	0	0	0	0	0	0	
396366.283767577.2	396366.28	3767577	0	0	0	0	0	0	0	0	0	0	0	0	0	0	0	
396466.283767577.2	396466.28	3767577	0	0	0	0	0	0	0	0	0	0	0	0	0	0	0	
396566.283767577.2	396566.28	3767577	0	0	0	0	0	0	0	0	0	0	0	0	0	0	0	
396666.283767577.2	396666.28	3767577	0	0	0	0	0	0	0	0	0	0	0	0	0	0	0	
396766.283767577.2	396766.28	3767577	0	0	0	0	0	0	0	0	0	0	0	0	0	0	0	
396866.283767577.2	396866.28	3767577	0	0	0	0	0	0	0	0	0	0	0	0	0	0	0	
396966.283767577.2	396966.28	3767577	0	0	0	0	0	0	0	0	0	0	0	0	0	0	0	
397066.283767577.2	397066.28	3767577	0	0	0	0	0	0	0	0	0	0	0	0	0	0	0	
397166.283767577.2	397166.28	3767577	0	0	0	0	0	0	0	0	0	0	0	0	0	0	0	
397266.283767577.2	397266.28	3767577	0	0	0	0	0	0	0	0	0	0	0	0	0	0	0	

Garvey Reservoir Rehab - Mitigated Proposed Pump Station - 3rd Trimester Star			Demolition - 2025	Demolition - 2026	Site Preparation - 2034	te Preparation - 20	Grading - 2034	Grading - 2026	Infrastructure - 2034	nfrastructure - 203	Paving - 2025	rchitectural Coating - 202	Child Risk				
Unique Identifier	X (UTM)	Y (UTM)	1900	1900	2034	1900	2034	1900	2034	2035	1900	1900	3rd Trimester	0<2	2<16	Total	per million
397366.283767577.2	397366.28	3767577	0	0	0	0	0	0	0	0	0	0	0	0	0	0	0
397466.283767577.2	397466.28	3767577	0	0	0	0	0	0	0	0	0	0	0	0	0	0	0
397566.283767577.2	397566.28	3767577	0	0	0	0	0	0	0	0	0	0	0	0	0	0	0
397666.283767577.2	397666.28	3767577	0	0	0	0	0	0	0	0	0	0	0	0	0	0	0
397766.283767577.2	397766.28	3767577	0	0	0	0	0	0	0	0	0	0	0	0	0	0	0
397866.283767577.2	397866.28	3767577	0	0	0	0	0	0	0	0	0	0	0	0	0	0	0
396166.283767677.2	396166.28	3767677	0	0	0	0	0	0	0	0	0	0	0	0	0	0	0
396266.283767677.2	396266.28	3767677	0	0	0	0	0	0	0	0	0	0	0	0	0	0	0
396366.283767677.2	396366.28	3767677	0	0	0	0	0	0	0	0	0	0	0	0	0	0	0
396466.283767677.2	396466.28	3767677	0	0	0	0	0	0	0	0	0	0	0	0	0	0	0
396566.283767677.2	396566.28	3767677	0	0	0	0	0	0	0	0	0	0	0	0	0	0	0
396666.283767677.2	396666.28	3767677	0	0	0	0	0	0	0	0	0	0	0	0	0	0	0
396766.283767677.2	396766.28	3767677	0	0	0	0	0	0	0	0	0	0	0	0	0	0	0
396866.283767677.2	396866.28	3767677	0	0	0	0	0	0	0	0	0	0	0	0	0	0	0
396966.283767677.2	396966.28	3767677	0	0	0	0	0	0	0	0	0	0	0	0	0	0	0
397066.283767677.2	397066.28	3767677	0	0	0	0	0	0	0	0	0	0	0	0	0	0	0
397166.283767677.2	397166.28	3767677	0	0	0	0	0	0	0	0	0	0	0	0	0	0	0
397266.283767677.2	397266.28	3767677	0	0	0	0	0	0	0	0	0	0	0	0	0	0	0
397366.283767677.2	397366.28	3767677	0	0	0	0	0	0	0	0	0	0	0	0	0	0	0
397466.283767677.2	397466.28	3767677	0	0	0	0	0	0	0	0	0	0	0	0	0	0	0
397566.283767677.2	397566.28	3767677	0	0	0	0	0	0	0	0	0	0	0	0	0	0	0
397666.283767677.2	397666.28	3767677	0	0	0	0	0	0	0	0	0	0	0	0	0	0	0
397766.283767677.2	397766.28	3767677	0	0	0	0	0	0	0	0	0	0	0	0	0	0	0
397866.283767677.2	397866.28	3767677	0	0	0	0	0	0	0	0	0	0	0	0	0	0	0
396166.283767777.2	396166.28	3767777	0	0	0	0	0	0	0	0	0	0	0	0	0	0	0
396266.283767777.2	396266.28	3767777	0	0	0	0	0	0	0	0	0	0	0	0	0	0	0
396366.283767777.2	396366.28	3767777	0	0	0	0	0	0	0	0	0	0	0	0	0	0	0
396466.283767777.2	396466.28	3767777	0	0	0	0	0	0	0	0	0	0	0	0	0	0	0
396566.283767777.2	396566.28	3767777	0	0	0	0	0	0	0	0	0	0	0	0	0	0	0
396666.283767777.2	396666.28	3767777	0	0	0	0	0	0	0	0	0	0	0	0	0	0	0
396766.283767777.2	396766.28	3767777	0	0	0	0	0	0	0	0	0	0	0	0	0	0	0
396866.283767777.2	396866.28	3767777	0	0	0	0	0	0	0	0	0	0	0	0	0	0	0
396966.283767777.2	396966.28	3767777	0	0	0	0	0	0	0	0	0	0	0	0	0	0	0
397066.283767777.2	397066.28	3767777	0	0	0	0	0	0	0	0	0	0	0	0	0	0	0
397166.283767777.2	397166.28	3767777	0	0	0	0	0	0	0	0	0	0	0	0	0	0	0
397266.283767777.2	397266.28	3767777	0	0	0	0	0	0	0	0	0	0	0	0	0	0	0
397366.283767777.2	397366.28	3767777	0	0	0	0	0	0	0	0	0	0	0	0	0	0	0
397466.283767777.2	397466.28	3767777	0	0	0	0	0	0	0	0	0	0	0	0	0	0	0
397566.283767777.2	397566.28	3767777	0	0	0	0	0	0	0	0	0	0	0	0	0	0	0
397666.283767777.2	397666.28	3767777	0	0	0	0	0	0	0	0	0	0	0	0	0	0	0
397766.283767777.2	397766.28	3767777	0	0	0	0	0	0	0	0	0	0	0	0	0	0	0
397866.283767777.2	397866.28	3767777	0	0	0	0	0	0	0	0	0	0	0	0	0	0	0
396166.283767877.2	396166.28	3767877	0	0	0	0	0	0	0	0	0	0	0	0	0	0	0
396266.283767877.2	396266.28	3767877	0	0	0	0	0	0	0	0	0	0	0	0	0	0	0
396366.283767877.2	396366.28	3767877	0	0	0	0	0	0	0	0	0	0	0	0	0	0	0
396466.283767877.2	396466.28	3767877	0	0	0	0	0	0	0	0	0	0	0	0	0	0	0
396566.283767877.2	396566.28	3767877	0	0	0	0	0	0	0	0	0	0	0	0	0	0	0
397466.283767877.2	397466.28	3767877	0	0	0	0	0	0	0	0	0	0	0	0	0	0	0
397566.283767877.2	397566.28	3767877	0	0	0	0	0	0	0	0	0	0	0	0	0	0	0
397666.283767877.2	397666.28	3767877	0	0	0	0	0	0	0	0	0	0	0	0	0	0	0
397766.283767877.2	397766.28	3767877	0	0	0	0	0	0	0	0	0	0	0	0	0	0	0
397866.283767877.2	397866.28	3767877	0	0	0	0	0	0	0	0	0	0	0	0	0	0	0
396166.283767977.2	396166.28	3767977	0	0	0	0	0	0	0	0	0	0	0	0	0	0	0
396266.283767977.2	396266.28	3767977	0	0	0	0	0	0	0	0	0	0	0	0	0	0	0
396366.283767977.2	396366.28	3767977	0	0	0	0	0	0	0	0	0	0	0	0	0	0	0
396466.283767977.2	396466.28	3767977	0	0	0	0	0	0	0	0	0	0	0	0	0	0	0
397466.283767977.2	397466.28	3767977	0	0	0	0	0	0	0	0	0	0	0	0	0	0	0
397566.283767977.2	397566.28	3767977	0	0	0	0	0	0	0	0	0	0	0	0	0	0	0
397666.283767977.2	397666.28	3767977	0	0	0	0	0	0	0	0	0	0	0	0	0	0	0
397766.283767977.2	397766.28	3767977	0	0	0	0	0	0	0	0	0	0	0	0	0	0	0
397866.283767977.2	397866.28	3767977	0	0	0	0	0	0	0	0	0	0	0	0	0	0	0
396166.283768077.2	396166.28	3768077	0	0	0	0	0	0	0	0	0	0	0	0	0	0	0
396266.283768077.2	396266.28	3768077	0	0	0	0	0	0	0	0	0	0	0	0	0	0	0
396366.283768077.2	396366.28	3768077	0	0	0	0	0	0	0	0	0	0	0	0	0	0	0
396466.283768077.2	396466.28	3768077	0	0	0	0	0	0	0	0	0	0	0	0	0	0	0
397466.283768077.2	397466.28	3768077	0	0	0	0	0	0	0	0	0	0	0	0	0	0	0
397566.283768077.2	397566.28	3768077	0	0	0	0	0	0	0	0	0	0	0	0	0	0	0
397666.283768077.2	397666.28	3768077	0	0	0	0	0	0	0	0	0	0	0	0	0	0	0
397766.283768077.2	397766.28	3768077	0	0	0	0	0	0	0	0	0	0	0	0	0	0	0
397866.283768077.2	397866.28	3768077	0	0	0	0	0	0	0	0	0	0	0	0	0	0	0
396166.283768177.2	396166.28	3768177	0	0	0	0	0	0	0	0	0	0	0	0	0	0	0
396266.283768177.2	396266.28	3768177	0	0	0	0	0	0	0	0	0	0	0	0	0	0	0
396366.283768177.2	396366.28	3768177	0	0	0	0	0	0	0	0	0	0	0	0	0	0	0
396466.283768177.2	396466.28	3768177	0	0	0	0	0	0	0	0	0	0	0	0	0	0	0
397466.283768177.2	397466.28	3768177	0	0	0	0	0	0	0	0	0	0	0	0	0	0	0

Garvey Reservoir Rehab - Mitigated Proposed Pump Station - 3rd Trimester Star			Demolition - 2025	Demolition - 2026	Site Preparation - 2034	te Preparation - 20	Grading - 2034	Grading - 2026	Infrastructure - 2034	nfrastructure - 203	Paving - 2025	rchitectural Coating - 202	Child Risk				
Unique Identifier	X (UTM)	Y (UTM)	1900	1900	2034	1900	2034	1900	2034	2035	1900	1900	3rd Trimester	0<2	2<16	Total	per million
397566.283768177.2	397566.28	3768177	0	0	0	0	0	0	0	0	0	0	0	0	0	0	0
397666.283768177.2	397666.28	3768177	0	0	0	0	0	0	0	0	0	0	0	0	0	0	0
397766.283768177.2	397766.28	3768177	0	0	0	0	0	0	0	0	0	0	0	0	0	0	0
397866.283768177.2	397866.28	3768177	0	0	0	0	0	0	0	0	0	0	0	0	0	0	0
396166.283768277.2	396166.28	3768277	0	0	0	0	0	0	0	0	0	0	0	0	0	0	0
396266.283768277.2	396266.28	3768277	0	0	0	0	0	0	0	0	0	0	0	0	0	0	0
396366.283768277.2	396366.28	3768277	0	0	0	0	0	0	0	0	0	0	0	0	0	0	0
396466.283768277.2	396466.28	3768277	0	0	0	0	0	0	0	0	0	0	0	0	0	0	0
397366.283768277.2	397366.28	3768277	0	0	0	0	0	0	0	0	0	0	0	0	0	0	0
397466.283768277.2	397466.28	3768277	0	0	0	0	0	0	0	0	0	0	0	0	0	0	0
397566.283768277.2	397566.28	3768277	0	0	0	0	0	0	0	0	0	0	0	0	0	0	0
397666.283768277.2	397666.28	3768277	0	0	0	0	0	0	0	0	0	0	0	0	0	0	0
397766.283768277.2	397766.28	3768277	0	0	0	0	0	0	0	0	0	0	0	0	0	0	0
397866.283768277.2	397866.28	3768277	0	0	0	0	0	0	0	0	0	0	0	0	0	0	0
396166.283768377.2	396166.28	3768377	0	0	0	0	0	0	0	0	0	0	0	0	0	0	0
396266.283768377.2	396266.28	3768377	0	0	0	0	0	0	0	0	0	0	0	0	0	0	0
396366.283768377.2	396366.28	3768377	0	0	0	0	0	0	0	0	0	0	0	0	0	0	0
396466.283768377.2	396466.28	3768377	0	0	0	0	0	0	0	0	0	0	0	0	0	0	0
397266.283768377.2	397266.28	3768377	0	0	0	0	0	0	0	0	0	0	0	0	0	0	0
397366.283768377.2	397366.28	3768377	0	0	0	0	0	0	0	0	0	0	0	0	0	0	0
397466.283768377.2	397466.28	3768377	0	0	0	0	0	0	0	0	0	0	0	0	0	0	0
397566.283768377.2	397566.28	3768377	0	0	0	0	0	0	0	0	0	0	0	0	0	0	0
397666.283768377.2	397666.28	3768377	0	0	0	0	0	0	0	0	0	0	0	0	0	0	0
397766.283768377.2	397766.28	3768377	0	0	0	0	0	0	0	0	0	0	0	0	0	0	0
397866.283768377.2	397866.28	3768377	0	0	0	0	0	0	0	0	0	0	0	0	0	0	0
396166.283768477.2	396166.28	3768477	0	0	0	0	0	0	0	0	0	0	0	0	0	0	0
396266.283768477.2	396266.28	3768477	0	0	0	0	0	0	0	0	0	0	0	0	0	0	0
396366.283768477.2	396366.28	3768477	0	0	0	0	0	0	0	0	0	0	0	0	0	0	0
396466.283768477.2	396466.28	3768477	0	0	0	0	0	0	0	0	0	0	0	0	0	0	0
397166.283768477.2	397166.28	3768477	0	0	0	0	0	0	0	0	0	0	0	0	0	0	0
397266.283768477.2	397266.28	3768477	0	0	0	0	0	0	0	0	0	0	0	0	0	0	0
397366.283768477.2	397366.28	3768477	0	0	0	0	0	0	0	0	0	0	0	0	0	0	0
397466.283768477.2	397466.28	3768477	0	0	0	0	0	0	0	0	0	0	0	0	0	0	0
397566.283768477.2	397566.28	3768477	0	0	0	0	0	0	0	0	0	0	0	0	0	0	0
397666.283768477.2	397666.28	3768477	0	0	0	0	0	0	0	0	0	0	0	0	0	0	0
397766.283768477.2	397766.28	3768477	0	0	0	0	0	0	0	0	0	0	0	0	0	0	0
397866.283768477.2	397866.28	3768477	0	0	0	0	0	0	0	0	0	0	0	0	0	0	0
396166.283768577.2	396166.28	3768577	0	0	0	0	0	0	0	0	0	0	0	0	0	0	0
396266.283768577.2	396266.28	3768577	0	0	0	0	0	0	0	0	0	0	0	0	0	0	0
396366.283768577.2	396366.28	3768577	0	0	0	0	0	0	0	0	0	0	0	0	0	0	0
396466.283768577.2	396466.28	3768577	0	0	0	0	0	0	0	0	0	0	0	0	0	0	0
396566.283768577.2	396566.28	3768577	0	0	0	0	0	0	0	0	0	0	0	0	0	0	0
396866.283768577.2	396866.28	3768577	0	0	0	0	0	0	0	0	0	0	0	0	0	0	0
396966.283768577.2	396966.28	3768577	0	0	0	0	0	0	0	0	0	0	0	0	0	0	0
397066.283768577.2	397066.28	3768577	0	0	0	0	0	0	0	0	0	0	0	0	0	0	0
397166.283768577.2	397166.28	3768577	0	0	0	0	0	0	0	0	0	0	0	0	0	0	0
397266.283768577.2	397266.28	3768577	0	0	0	0	0	0	0	0	0	0	0	0	0	0	0
397366.283768577.2	397366.28	3768577	0	0	0	0	0	0	0	0	0	0	0	0	0	0	0
397466.283768577.2	397466.28	3768577	0	0	0	0	0	0	0	0	0	0	0	0	0	0	0
397566.283768577.2	397566.28	3768577	0	0	0	0	0	0	0	0	0	0	0	0	0	0	0
397666.283768577.2	397666.28	3768577	0	0	0	0	0	0	0	0	0	0	0	0	0	0	0
397766.283768577.2	397766.28	3768577	0	0	0	0	0	0	0	0	0	0	0	0	0	0	0
397866.283768577.2	397866.28	3768577	0	0	0	0	0	0	0	0	0	0	0	0	0	0	0
396166.283768677.2	396166.28	3768677	0	0	0	0	0	0	0	0	0	0	0	0	0	0	0
396266.283768677.2	396266.28	3768677	0	0	0	0	0	0	0	0	0	0	0	0	0	0	0
396366.283768677.2	396366.28	3768677	0	0	0	0	0	0	0	0	0	0	0	0	0	0	0
396466.283768677.2	396466.28	3768677	0	0	0	0	0	0	0	0	0	0	0	0	0	0	0
396566.283768677.2	396566.28	3768677	0	0	0	0	0	0	0	0	0	0	0	0	0	0	0
396666.283768677.2	396666.28	3768677	0	0	0	0	0	0	0	0	0	0	0	0	0	0	0
396766.283768677.2	396766.28	3768677	0	0	0	0	0	0	0	0	0	0	0	0	0	0	0
396866.283768677.2	396866.28	3768677	0	0	0	0	0	0	0	0	0	0	0	0	0	0	0
396966.283768677.2	396966.28	3768677	0	0	0	0	0	0	0	0	0	0	0	0	0	0	0
397066.283768677.2	397066.28	3768677	0	0	0	0	0	0	0	0	0	0	0	0	0	0	0
397166.283768677.2	397166.28	3768677	0	0	0	0	0	0	0	0	0	0	0	0	0	0	0
397366.283768677.2	397366.28	3768677	0	0	0	0	0	0	0	0	0	0	0	0	0	0	0
397466.283768677.2	397466.28	3768677	0	0	0	0	0	0	0	0	0	0	0	0	0	0	0
397566.283768677.2	397566.28	3768677	0	0	0	0	0	0	0	0	0	0	0	0	0	0	0
397666.283768677.2	397666.28	3768677	0	0	0	0	0	0	0	0	0	0	0	0	0	0	0
397766.283768677.2	397766.28	3768677	0	0	0	0	0	0	0	0	0	0	0	0	0	0	0
397866.283768677.2	397866.28	3768677	0	0	0	0	0	0	0	0	0	0	0	0	0	0	0
396166.283768777.2	396166.28	3768777	0	0	0	0	0	0	0	0	0	0	0	0	0	0	0
396266.283768777.2	396266.28	3768777	0	0	0	0	0	0	0	0	0	0	0	0	0	0	0
396366.283768777.2	396366.28	3768777	0	0	0	0	0	0	0	0	0	0	0	0	0	0	0
396466.283768777.2	396466.28	3768777	0	0	0	0	0	0	0	0	0	0	0	0	0	0	0
396566.283768777.2	396566.28	3768777	0	0	0	0	0	0	0	0	0	0	0	0	0	0	0

Garvey Reservoir Rehab - Mitigated Proposed Pump Station - 3rd Trimester Star			Demolition - 2025	Demolition - 2026	Site Preparation - 2034	te Preparation - 20	Grading - 2034	Grading - 2026	Infrastructure - 2034	nfrastructure - 203	Paving - 2025	rchitectural Coating - 202	Child Risk				
Unique Identifier	X (UTM)	Y (UTM)	1900	1900	2034	1900	2034	1900	2034	2035	1900	1900	3rd Trimester	0<2	2<16	Total	per million
396666.283768777.2	396666.28	3768777	0	0	0	0	0	0	0	0	0	0	0	0	0	0	0
396766.283768777.2	396766.28	3768777	0	0	0	0	0	0	0	0	0	0	0	0	0	0	0
396866.283768777.2	396866.28	3768777	0	0	0	0	0	0	0	0	0	0	0	0	0	0	0
396966.283768777.2	396966.28	3768777	0	0	0	0	0	0	0	0	0	0	0	0	0	0	0
397066.283768777.2	397066.28	3768777	0	0	0	0	0	0	0	0	0	0	0	0	0	0	0
397166.283768777.2	397166.28	3768777	0	0	0	0	0	0	0	0	0	0	0	0	0	0	0
397266.283768777.2	397266.28	3768777	0	0	0	0	0	0	0	0	0	0	0	0	0	0	0
397366.283768777.2	397366.28	3768777	0	0	0	0	0	0	0	0	0	0	0	0	0	0	0
397466.283768777.2	397466.28	3768777	0	0	0	0	0	0	0	0	0	0	0	0	0	0	0
397566.283768777.2	397566.28	3768777	0	0	0	0	0	0	0	0	0	0	0	0	0	0	0
397666.283768777.2	397666.28	3768777	0	0	0	0	0	0	0	0	0	0	0	0	0	0	0
397766.283768777.2	397766.28	3768777	0	0	0	0	0	0	0	0	0	0	0	0	0	0	0
397866.283768777.2	397866.28	3768777	0	0	0	0	0	0	0	0	0	0	0	0	0	0	0
396166.283768877.2	396166.28	3768877	0	0	0	0	0	0	0	0	0	0	0	0	0	0	0
396266.283768877.2	396266.28	3768877	0	0	0	0	0	0	0	0	0	0	0	0	0	0	0
396366.283768877.2	396366.28	3768877	0	0	0	0	0	0	0	0	0	0	0	0	0	0	0
396466.283768877.2	396466.28	3768877	0	0	0	0	0	0	0	0	0	0	0	0	0	0	0
396566.283768877.2	396566.28	3768877	0	0	0	0	0	0	0	0	0	0	0	0	0	0	0
396666.283768877.2	396666.28	3768877	0	0	0	0	0	0	0	0	0	0	0	0	0	0	0
396766.283768877.2	396766.28	3768877	0	0	0	0	0	0	0	0	0	0	0	0	0	0	0
396866.283768877.2	396866.28	3768877	0	0	0	0	0	0	0	0	0	0	0	0	0	0	0
396966.283768877.2	396966.28	3768877	0	0	0	0	0	0	0	0	0	0	0	0	0	0	0
397066.283768877.2	397066.28	3768877	0	0	0	0	0	0	0	0	0	0	0	0	0	0	0
397166.283768877.2	397166.28	3768877	0	0	0	0	0	0	0	0	0	0	0	0	0	0	0
397266.283768877.2	397266.28	3768877	0	0	0	0	0	0	0	0	0	0	0	0	0	0	0
397366.283768877.2	397366.28	3768877	0	0	0	0	0	0	0	0	0	0	0	0	0	0	0
397466.283768877.2	397466.28	3768877	0	0	0	0	0	0	0	0	0	0	0	0	0	0	0
397566.283768877.2	397566.28	3768877	0	0	0	0	0	0	0	0	0	0	0	0	0	0	0
397666.283768877.2	397666.28	3768877	0	0	0	0	0	0	0	0	0	0	0	0	0	0	0
397766.283768877.2	397766.28	3768877	0	0	0	0	0	0	0	0	0	0	0	0	0	0	0
397866.283768877.2	397866.28	3768877	0	0	0	0	0	0	0	0	0	0	0	0	0	0	0
3964253767739	396425	3767739	0	0	0	0	0	0	0	0	0	0	0	0	0	0	0
3964753767739	396475	3767739	0	0	0	0	0	0	0	0	0	0	0	0	0	0	0
3965253767739	396525	3767739	0	0	0	0	0	0	0	0	0	0	0	0	0	0	0
3965753767739	396575	3767739	0	0	0	0	0	0	0	0	0	0	0	0	0	0	0
3966253767739	396625	3767739	0	0	0	0	0	0	0	0	0	0	0	0	0	0	0
3966753767739	396675	3767739	0	0	0	0	0	0	0	0	0	0	0	0	0	0	0
3967253767739	396725	3767739	0	0	0	0	0	0	0	0	0	0	0	0	0	0	0
3967753767739	396775	3767739	0	0	0	0	0	0	0	0	0	0	0	0	0	0	0
3968253767739	396825	3767739	0	0	0	0	0	0	0	0	0	0	0	0	0	0	0
3968753767739	396875	3767739	0	0	0	0	0	0	0	0	0	0	0	0	0	0	0
3969253767739	396925	3767739	0	0	0	0	0	0	0	0	0	0	0	0	0	0	0
3969753767739	396975	3767739	0	0	0	0	0	0	0	0	0	0	0	0	0	0	0
3970253767739	397025	3767739	0	0	0	0	0	0	0	0	0	0	0	0	0	0	0
3970753767739	397075	3767739	0	0	0	0	0	0	0	0	0	0	0	0	0	0	0
3971253767739	397125	3767739	0	0	0	0	0	0	0	0	0	0	0	0	0	0	0
3971753767739	397175	3767739	0	0	0	0	0	0	0	0	0	0	0	0	0	0	0
3972253767739	397225	3767739	0	0	0	0	0	0	0	0	0	0	0	0	0	0	0
3972753767739	397275	3767739	0	0	0	0	0	0	0	0	0	0	0	0	0	0	0
3973253767739	397325	3767739	0	0	0	0	0	0	0	0	0	0	0	0	0	0	0
3973753767739	397375	3767739	0	0	0	0	0	0	0	0	0	0	0	0	0	0	0
3974253767739	397425	3767739	0	0	0	0	0	0	0	0	0	0	0	0	0	0	0
3974753767739	397475	3767739	0	0	0	0	0	0	0	0	0	0	0	0	0	0	0
3975253767739	397525	3767739	0	0	0	0	0	0	0	0	0	0	0	0	0	0	0
3964253767789	396425	3767789	0	0	0	0	0	0	0	0	0	0	0	0	0	0	0
3964753767789	396475	3767789	0	0	0	0	0	0	0	0	0	0	0	0	0	0	0
3965253767789	396525	3767789	0	0	0	0	0	0	0	0	0	0	0	0	0	0	0
3965753767789	396575	3767789	0	0	0	0	0	0	0	0	0	0	0	0	0	0	0
3966253767789	396625	3767789	0	0	0	0	0	0	0	0	0	0	0	0	0	0	0
3966753767789	396675	3767789	0	0	0	0	0	0	0	0	0	0	0	0	0	0	0
3967253767789	396725	3767789	0	0	0	0	0	0	0	0	0	0	0	0	0	0	0
3967753767789	396775	3767789	0	0	0	0	0	0	0	0	0	0	0	0	0	0	0
3968253767789	396825	3767789	0	0	0	0	0	0	0	0	0	0	0	0	0	0	0
3968753767789	396875	3767789	0	0	0	0	0	0	0	0	0	0	0	0	0	0	0
3969253767789	396925	3767789	0	0	0	0	0	0	0	0	0	0	0	0	0	0	0
3969753767789	396975	3767789	0	0	0	0	0	0	0	0	0	0	0	0	0	0	0
3970253767789	397025	3767789	0	0	0	0	0	0	0	0	0	0	0	0	0	0	0
3970753767789	397075	3767789	0	0	0	0	0	0	0	0	0	0	0	0	0	0	0
3971253767789	397125	3767789	0	0	0	0	0	0	0	0	0	0	0	0	0	0	0
3971753767789	397175	3767789	0	0	0	0	0	0	0	0	0	0	0	0	0	0	0
3972253767789	397225	3767789	0	0	0	0	0	0	0	0	0	0	0	0	0	0	0
3972753767789	397275	3767789	0	0	0	0	0	0	0	0	0	0	0	0	0	0	0
3973253767789	397325	3767789	0	0	0	0	0	0	0	0	0	0	0	0	0	0	0
3973753767789	397375	3767789	0	0	0	0	0	0	0	0	0	0	0	0	0	0	0
3974253767789	397425	3767789	0	0	0	0	0	0	0	0	0	0	0	0	0	0	0

Garvey Reservoir Rehab - Mitigated Proposed Pump Station - 3rd Trimester Star			Demolition - 2025	Demolition - 2026	Site Preparation - 2034	te Preparation - 20	Grading - 2034	Grading - 2026	Infrastructure - 2034	nfrastructure - 203	Paving - 2025	rchitectural Coating - 202	Child Risk				
Unique Identifier	X (UTM)	Y (UTM)	1900	1900	2034	1900	2034	1900	2034	2035	1900	1900	3rd Trimester	0<2	2<16	Total	per million
3974753767789	397475	3767789	0	0	0	0	0	0	0	0	0	0	0	0	0	0	0
3975253767789	397525	3767789	0	0	0	0	0	0	0	0	0	0	0	0	0	0	0
3964253767839	396425	3767839	0	0	0	0	0	0	0	0	0	0	0	0	0	0	0
3964753767839	396475	3767839	0	0	0	0	0	0	0	0	0	0	0	0	0	0	0
3965253767839	396525	3767839	0	0	0	0	0	0	0	0	0	0	0	0	0	0	0
3965753767839	396575	3767839	0	0	0	0	0	0	0	0	0	0	0	0	0	0	0
3966253767839	396625	3767839	0	0	0	0	0	0	0	0	0	0	0	0	0	0	0
3966753767839	396675	3767839	0	0	0	0	0	0	0	0	0	0	0	0	0	0	0
3967253767839	396725	3767839	0	0	0	0	0	0	0	0	0	0	0	0	0	0	0
3967753767839	396775	3767839	0	0	0	0	0	0	0	0	0	0	0	0	0	0	0
3968253767839	396825	3767839	0	0	0	0	0	0	0	0	0	0	0	0	0	0	0
3968753767839	396875	3767839	0	0	0	0	0	0	0	0	0	0	0	0	0	0	0
3969253767839	396925	3767839	0	0	0	0	0	0	0	0	0	0	0	0	0	0	0
3969753767839	396975	3767839	0	0	0	0	0	0	0	0	0	0	0	0	0	0	0
3970253767839	397025	3767839	0	0	0	0	0	0	0	0	0	0	0	0	0	0	0
3970753767839	397075	3767839	0	0	0	0	0	0	0	0	0	0	0	0	0	0	0
3971253767839	397125	3767839	0	0	0	0	0	0	0	0	0	0	0	0	0	0	0
3971753767839	397175	3767839	0	0	0	0	0	0	0	0	0	0	0	0	0	0	0
3972253767839	397225	3767839	0	0	0	0	0	0	0	0	0	0	0	0	0	0	0
3972753767839	397275	3767839	0	0	0	0	0	0	0	0	0	0	0	0	0	0	0
3973253767839	397325	3767839	0	0	0	0	0	0	0	0	0	0	0	0	0	0	0
3973753767839	397375	3767839	0	0	0	0	0	0	0	0	0	0	0	0	0	0	0
3974753767839	397475	3767839	0	0	0	0	0	0	0	0	0	0	0	0	0	0	0
3975253767839	397525	3767839	0	0	0	0	0	0	0	0	0	0	0	0	0	0	0
3964253767889	396425	3767889	0	0	0	0	0	0	0	0	0	0	0	0	0	0	0
3964753767889	396475	3767889	0	0	0	0	0	0	0	0	0	0	0	0	0	0	0
3965253767889	396525	3767889	0	0	0	0	0	0	0	0	0	0	0	0	0	0	0
3965753767889	396575	3767889	0	0	0	0	0	0	0	0	0	0	0	0	0	0	0
3974753767889	397475	3767889	0	0	0	0	0	0	0	0	0	0	0	0	0	0	0
3975253767889	397525	3767889	0	0	0	0	0	0	0	0	0	0	0	0	0	0	0
3964253767939	396425	3767939	0	0	0	0	0	0	0	0	0	0	0	0	0	0	0
3964753767939	396475	3767939	0	0	0	0	0	0	0	0	0	0	0	0	0	0	0
3965253767939	396525	3767939	0	0	0	0	0	0	0	0	0	0	0	0	0	0	0
3974753767939	397475	3767939	0	0	0	0	0	0	0	0	0	0	0	0	0	0	0
3975253767939	397525	3767939	0	0	0	0	0	0	0	0	0	0	0	0	0	0	0
3964253767989	396425	3767989	0	0	0	0	0	0	0	0	0	0	0	0	0	0	0
3964753767989	396475	3767989	0	0	0	0	0	0	0	0	0	0	0	0	0	0	0
3974753767989	397475	3767989	0	0	0	0	0	0	0	0	0	0	0	0	0	0	0
3975253767989	397525	3767989	0	0	0	0	0	0	0	0	0	0	0	0	0	0	0
3964253768039	396425	3768039	0	0	0	0	0	0	0	0	0	0	0	0	0	0	0
3964753768039	396475	3768039	0	0	0	0	0	0	0	0	0	0	0	0	0	0	0
3974753768039	397475	3768039	0	0	0	0	0	0	0	0	0	0	0	0	0	0	0
3975253768039	397525	3768039	0	0	0	0	0	0	0	0	0	0	0	0	0	0	0
3964253768089	396425	3768089	0	0	0	0	0	0	0	0	0	0	0	0	0	0	0
3964753768089	396475	3768089	0	0	0	0	0	0	0	0	0	0	0	0	0	0	0
3974753768089	397475	3768089	0	0	0	0	0	0	0	0	0	0	0	0	0	0	0
3975253768089	397525	3768089	0	0	0	0	0	0	0	0	0	0	0	0	0	0	0
3964253768139	396425	3768139	0	0	0	0	0	0	0	0	0	0	0	0	0	0	0
3964753768139	396475	3768139	0	0	0	0	0	0	0	0	0	0	0	0	0	0	0
3974253768139	397425	3768139	0	0	0	0	0	0	0	0	0	0	0	0	0	0	0
3974753768139	397475	3768139	0	0	0	0	0	0	0	0	0	0	0	0	0	0	0
3975253768139	397525	3768139	0	0	0	0	0	0	0	0	0	0	0	0	0	0	0
3964253768189	396425	3768189	0	0	0	0	0	0	0	0	0	0	0	0	0	0	0
3964753768189	396475	3768189	0	0	0	0	0	0	0	0	0	0	0	0	0	0	0
3973753768189	397375	3768189	0	0	0	0	0	0	0	0	0	0	0	0	0	0	0
3974253768189	397425	3768189	0	0	0	0	0	0	0	0	0	0	0	0	0	0	0
3974753768189	397475	3768189	0	0	0	0	0	0	0	0	0	0	0	0	0	0	0
3975253768189	397525	3768189	0	0	0	0	0	0	0	0	0	0	0	0	0	0	0
3964253768239	396425	3768239	0	0	0	0	0	0	0	0	0	0	0	0	0	0	0
3964753768239	396475	3768239	0	0	0	0	0	0	0	0	0	0	0	0	0	0	0
3973753768239	397375	3768239	0	0	0	0	0	0	0	0	0	0	0	0	0	0	0
3974253768239	397425	3768239	0	0	0	0	0	0	0	0	0	0	0	0	0	0	0
3974753768239	397475	3768239	0	0	0	0	0	0	0	0	0	0	0	0	0	0	0
3975253768239	397525	3768239	0	0	0	0	0	0	0	0	0	0	0	0	0	0	0
3964253768289	396425	3768289	0	0	0	0	0	0	0	0	0	0	0	0	0	0	0
3964753768289	396475	3768289	0	0	0	0	0	0	0	0	0	0	0	0	0	0	0
3973253768289	397325	3768289	0	0	0	0	0	0	0	0	0	0	0	0	0	0	0
3973753768289	397375	3768289	0	0	0	0	0	0	0	0	0	0	0	0	0	0	0
3974253768289	397425	3768289	0	0	0	0	0	0	0	0	0	0	0	0	0	0	0
3974753768289	397475	3768289	0	0	0	0	0	0	0	0	0	0	0	0	0	0	0
3975253768289	397525	3768289	0	0	0	0	0	0	0	0	0	0	0	0	0	0	0
3964253768339	396425	3768339	0	0	0	0	0	0	0	0	0	0	0	0	0	0	0
3964753768339	396475	3768339	0	0	0	0	0	0	0	0	0	0	0	0	0	0	0
3965253768339	396525	3768339	0	0	0	0	0	0	0	0	0	0	0	0	0	0	0
3972753768339	397275	3768339	0	0	0	0	0	0	0	0	0	0	0	0	0	0	0

Garvey Reservoir Rehab - Mitigated Proposed Pump Station - 3rd Trimester Star			Demolition - 2025	Demolition - 2026	Site Preparation - 2034	te Preparation - 20	Grading - 2034	Grading - 2026	Infrastructure - 2034	nfrastructure - 203	Paving - 2025	rchitectural Coating - 202	Child Risk				
Unique Identifier	X (UTM)	Y (UTM)	1900	1900	2034	1900	2034	1900	2034	2035	1900	1900	3rd Trimester	0<2	2<16	Total	per million
3973253768339	397325	3768339	0	0	0	0	0	0	0	0	0	0	0	0	0	0	0
3973753768339	397375	3768339	0	0	0	0	0	0	0	0	0	0	0	0	0	0	0
3974253768339	397425	3768339	0	0	0	0	0	0	0	0	0	0	0	0	0	0	0
3974753768339	397475	3768339	0	0	0	0	0	0	0	0	0	0	0	0	0	0	0
3975253768339	397525	3768339	0	0	0	0	0	0	0	0	0	0	0	0	0	0	0
3964253768389	396425	3768389	0	0	0	0	0	0	0	0	0	0	0	0	0	0	0
3964753768389	396475	3768389	0	0	0	0	0	0	0	0	0	0	0	0	0	0	0
3965253768389	396525	3768389	0	0	0	0	0	0	0	0	0	0	0	0	0	0	0
3972253768389	397225	3768389	0	0	0	0	0	0	0	0	0	0	0	0	0	0	0
3972753768389	397275	3768389	0	0	0	0	0	0	0	0	0	0	0	0	0	0	0
3973253768389	397325	3768389	0	0	0	0	0	0	0	0	0	0	0	0	0	0	0
3973753768389	397375	3768389	0	0	0	0	0	0	0	0	0	0	0	0	0	0	0
3974253768389	397425	3768389	0	0	0	0	0	0	0	0	0	0	0	0	0	0	0
3974753768389	397475	3768389	0	0	0	0	0	0	0	0	0	0	0	0	0	0	0
3975253768389	397525	3768389	0	0	0	0	0	0	0	0	0	0	0	0	0	0	0
3964253768439	396425	3768439	0	0	0	0	0	0	0	0	0	0	0	0	0	0	0
3964753768439	396475	3768439	0	0	0	0	0	0	0	0	0	0	0	0	0	0	0
3965253768439	396525	3768439	0	0	0	0	0	0	0	0	0	0	0	0	0	0	0
3971753768439	397175	3768439	0	0	0	0	0	0	0	0	0	0	0	0	0	0	0
3972253768439	397225	3768439	0	0	0	0	0	0	0	0	0	0	0	0	0	0	0
3972753768439	397275	3768439	0	0	0	0	0	0	0	0	0	0	0	0	0	0	0
3973253768439	397325	3768439	0	0	0	0	0	0	0	0	0	0	0	0	0	0	0
3973753768439	397375	3768439	0	0	0	0	0	0	0	0	0	0	0	0	0	0	0
3974253768439	397425	3768439	0	0	0	0	0	0	0	0	0	0	0	0	0	0	0
3974753768439	397475	3768439	0	0	0	0	0	0	0	0	0	0	0	0	0	0	0
3975253768439	397525	3768439	0	0	0	0	0	0	0	0	0	0	0	0	0	0	0
3964253768489	396425	3768489	0	0	0	0	0	0	0	0	0	0	0	0	0	0	0
3964753768489	396475	3768489	0	0	0	0	0	0	0	0	0	0	0	0	0	0	0
3965253768489	396525	3768489	0	0	0	0	0	0	0	0	0	0	0	0	0	0	0
3970753768489	397075	3768489	0	0	0	0	0	0	0	0	0	0	0	0	0	0	0
3971253768489	397125	3768489	0	0	0	0	0	0	0	0	0	0	0	0	0	0	0
3971753768489	397175	3768489	0	0	0	0	0	0	0	0	0	0	0	0	0	0	0
3972253768489	397225	3768489	0	0	0	0	0	0	0	0	0	0	0	0	0	0	0
3972753768489	397275	3768489	0	0	0	0	0	0	0	0	0	0	0	0	0	0	0
3973253768489	397325	3768489	0	0	0	0	0	0	0	0	0	0	0	0	0	0	0
3973753768489	397375	3768489	0	0	0	0	0	0	0	0	0	0	0	0	0	0	0
3974253768489	397425	3768489	0	0	0	0	0	0	0	0	0	0	0	0	0	0	0
3974753768489	397475	3768489	0	0	0	0	0	0	0	0	0	0	0	0	0	0	0
3975253768489	397525	3768489	0	0	0	0	0	0	0	0	0	0	0	0	0	0	0
3964253768539	396425	3768539	0	0	0	0	0	0	0	0	0	0	0	0	0	0	0
3964753768539	396475	3768539	0	0	0	0	0	0	0	0	0	0	0	0	0	0	0
3965253768539	396525	3768539	0	0	0	0	0	0	0	0	0	0	0	0	0	0	0
3965753768539	396575	3768539	0	0	0	0	0	0	0	0	0	0	0	0	0	0	0
3970253768539	397025	3768539	0	0	0	0	0	0	0	0	0	0	0	0	0	0	0
3970753768539	397075	3768539	0	0	0	0	0	0	0	0	0	0	0	0	0	0	0
3971253768539	397125	3768539	0	0	0	0	0	0	0	0	0	0	0	0	0	0	0
3971753768539	397175	3768539	0	0	0	0	0	0	0	0	0	0	0	0	0	0	0
3972253768539	397225	3768539	0	0	0	0	0	0	0	0	0	0	0	0	0	0	0
3972753768539	397275	3768539	0	0	0	0	0	0	0	0	0	0	0	0	0	0	0
3973253768539	397325	3768539	0	0	0	0	0	0	0	0	0	0	0	0	0	0	0
3973753768539	397375	3768539	0	0	0	0	0	0	0	0	0	0	0	0	0	0	0
3974253768539	397425	3768539	0	0	0	0	0	0	0	0	0	0	0	0	0	0	0
3974753768539	397475	3768539	0	0	0	0	0	0	0	0	0	0	0	0	0	0	0
3975253768539	397525	3768539	0	0	0	0	0	0	0	0	0	0	0	0	0	0	0
3964253768589	396425	3768589	0	0	0	0	0	0	0	0	0	0	0	0	0	0	0
3964753768589	396475	3768589	0	0	0	0	0	0	0	0	0	0	0	0	0	0	0
3965253768589	396525	3768589	0	0	0	0	0	0	0	0	0	0	0	0	0	0	0
3965753768589	396575	3768589	0	0	0	0	0	0	0	0	0	0	0	0	0	0	0
3966253768589	396625	3768589	0	0	0	0	0	0	0	0	0	0	0	0	0	0	0
3968253768589	396825	3768589	0	0	0	0	0	0	0	0	0	0	0	0	0	0	0
3968753768589	396875	3768589	0	0	0	0	0	0	0	0	0	0	0	0	0	0	0
3969253768589	396925	3768589	0	0	0	0	0	0	0	0	0	0	0	0	0	0	0
3969753768589	396975	3768589	0	0	0	0	0	0	0	0	0	0	0	0	0	0	0
3970253768589	397025	3768589	0	0	0	0	0	0	0	0	0	0	0	0	0	0	0
3970753768589	397075	3768589	0	0	0	0	0	0	0	0	0	0	0	0	0	0	0
3971253768589	397125	3768589	0	0	0	0	0	0	0	0	0	0	0	0	0	0	0
3971753768589	397175	3768589	0	0	0	0	0	0	0	0	0	0	0	0	0	0	0
3972253768589	397225	3768589	0	0	0	0	0	0	0	0	0	0	0	0	0	0	0
3972753768589	397275	3768589	0	0	0	0	0	0	0	0	0	0	0	0	0	0	0
3973253768589	397325	3768589	0	0	0	0	0	0	0	0	0	0	0	0	0	0	0
3973753768589	397375	3768589	0	0	0	0	0	0	0	0	0	0	0	0	0	0	0
3974253768589	397425	3768589	0	0	0	0	0	0	0	0	0	0	0	0	0	0	0
3974753768589	397475	3768589	0	0	0	0	0	0	0	0	0	0	0	0	0	0	0
3975253768589	397525	3768589	0	0	0	0	0	0	0	0	0	0	0	0	0	0	0
3964253768639	396425	3768639	0	0	0	0	0	0	0	0	0	0	0	0	0	0	0

Garvey Reservoir Rehab - Mitigated Proposed Pump Station - 3rd Trimester Star			Demolition - 2025	Demolition - 2026	Site Preparation - 2034	te Preparation - 20	Grading - 2034	Grading - 2026	Infrastructure - 2034	nfrastructure - 203	Paving - 2025	rchitectural Coating - 202	Child Risk				
Unique Identifier	X (UTM)	Y (UTM)	1900	1900	2034	1900	2034	1900	2034	2035	1900	1900	3rd Trimester	0<2	2<16	Total	per million
3964753768639	396475	3768639	0	0	0	0	0	0	0	0	0	0	0	0	0	0	0
3965253768639	396525	3768639	0	0	0	0	0	0	0	0	0	0	0	0	0	0	0
3965753768639	396575	3768639	0	0	0	0	0	0	0	0	0	0	0	0	0	0	0
3966253768639	396625	3768639	0	0	0	0	0	0	0	0	0	0	0	0	0	0	0
3966753768639	396675	3768639	0	0	0	0	0	0	0	0	0	0	0	0	0	0	0
3967253768639	396725	3768639	0	0	0	0	0	0	0	0	0	0	0	0	0	0	0
3967753768639	396775	3768639	0	0	0	0	0	0	0	0	0	0	0	0	0	0	0
3968253768639	396825	3768639	0	0	0	0	0	0	0	0	0	0	0	0	0	0	0
3968753768639	396875	3768639	0	0	0	0	0	0	0	0	0	0	0	0	0	0	0
3969253768639	396925	3768639	0	0	0	0	0	0	0	0	0	0	0	0	0	0	0
3969753768639	396975	3768639	0	0	0	0	0	0	0	0	0	0	0	0	0	0	0
3970253768639	397025	3768639	0	0	0	0	0	0	0	0	0	0	0	0	0	0	0
3970753768639	397075	3768639	0	0	0	0	0	0	0	0	0	0	0	0	0	0	0
3971253768639	397125	3768639	0	0	0	0	0	0	0	0	0	0	0	0	0	0	0
3971753768639	397175	3768639	0	0	0	0	0	0	0	0	0	0	0	0	0	0	0
3972253768639	397225	3768639	0	0	0	0	0	0	0	0	0	0	0	0	0	0	0
3972753768639	397275	3768639	0	0	0	0	0	0	0	0	0	0	0	0	0	0	0
3973253768639	397325	3768639	0	0	0	0	0	0	0	0	0	0	0	0	0	0	0
3973753768639	397375	3768639	0	0	0	0	0	0	0	0	0	0	0	0	0	0	0
3974253768639	397425	3768639	0	0	0	0	0	0	0	0	0	0	0	0	0	0	0
3974753768639	397475	3768639	0	0	0	0	0	0	0	0	0	0	0	0	0	0	0
3975253768639	397525	3768639	0	0	0	0	0	0	0	0	0	0	0	0	0	0	0
3964253768689	396425	3768689	0	0	0	0	0	0	0	0	0	0	0	0	0	0	0
3964753768689	396475	3768689	0	0	0	0	0	0	0	0	0	0	0	0	0	0	0
3965253768689	396525	3768689	0	0	0	0	0	0	0	0	0	0	0	0	0	0	0
3965753768689	396575	3768689	0	0	0	0	0	0	0	0	0	0	0	0	0	0	0
3966253768689	396625	3768689	0	0	0	0	0	0	0	0	0	0	0	0	0	0	0
3966753768689	396675	3768689	0	0	0	0	0	0	0	0	0	0	0	0	0	0	0
3967253768689	396725	3768689	0	0	0	0	0	0	0	0	0	0	0	0	0	0	0
3967753768689	396775	3768689	0	0	0	0	0	0	0	0	0	0	0	0	0	0	0
3968253768689	396825	3768689	0	0	0	0	0	0	0	0	0	0	0	0	0	0	0
3968753768689	396875	3768689	0	0	0	0	0	0	0	0	0	0	0	0	0	0	0
3969253768689	396925	3768689	0	0	0	0	0	0	0	0	0	0	0	0	0	0	0
3969753768689	396975	3768689	0	0	0	0	0	0	0	0	0	0	0	0	0	0	0
3970253768689	397025	3768689	0	0	0	0	0	0	0	0	0	0	0	0	0	0	0
3970753768689	397075	3768689	0	0	0	0	0	0	0	0	0	0	0	0	0	0	0
3971253768689	397125	3768689	0	0	0	0	0	0	0	0	0	0	0	0	0	0	0
3971753768689	397175	3768689	0	0	0	0	0	0	0	0	0	0	0	0	0	0	0
3972253768689	397225	3768689	0	0	0	0	0	0	0	0	0	0	0	0	0	0	0
3972753768689	397275	3768689	0	0	0	0	0	0	0	0	0	0	0	0	0	0	0
3973253768689	397325	3768689	0	0	0	0	0	0	0	0	0	0	0	0	0	0	0
3973753768689	397375	3768689	0	0	0	0	0	0	0	0	0	0	0	0	0	0	0
3974253768689	397425	3768689	0	0	0	0	0	0	0	0	0	0	0	0	0	0	0
3974753768689	397475	3768689	0	0	0	0	0	0	0	0	0	0	0	0	0	0	0
3975253768689	397525	3768689	0	0	0	0	0	0	0	0	0	0	0	0	0	0	0

Garvey Reservoir Rehab - Mitigated Proposed Pump Station - 3rd Trimester Start

Maximum Individual Non-Cancer Impact Calculations - Sensitive Receptors (Maximum Impacted Senior Residential Receptor) (IMPACT AT ALL OTHER LOCATIONS ON THE PROJECT SITE WOULD BE LESS THAN SHOWN)

Maximum Non-cancer Chronic Hazards / Toxicological Endpoints*

Receptor Group	Pollutant	CREL[1]	CONC	WFrac	$CONC_{WF}$	HI		ALIM	BN	CVS	DEV	ENDC	EYE	HEM	IMMUN	KIDN	NS	REPRO	RESP	SK
Project:																				
MEI - Max	DPM	5.00E+00	1.41E-02	1.00E+00	1.41E-02	0.003		-	-	-	-	-	-	-	-	-	-	-	2.82E-03	-
							Total Risk				-			-				-	0.003	
							Threshold				1.00			1.00				1.00	1.00	
							Over?				NO			NO				NO	NO	

Notes:

1. California Air Resources Board, "Consolidated Table of OEHHA/ARB Approved Risk Assessment Health Values," "OEHHA/ARB Approved Chronic Reference Exposure Levels and Target Organs," "OEHHA/ARB Approved Acute Reference Exposure Levels and Target Organs," and "OEHHA/ARB Approved 8-Hour Reference Exposure Levels and Target Organs," http://www.arb.ca.gov/toxics/healthval/healthval.htm. Tables last updated: May 8, 2018. Downloaded: 08/14/18.

Source: ESA, 2020

Where:

$CONC_{WF}$	Pollutant Concentration ($\mu g/m^3$) multiplied by the weight fraction
CREL	Chronic Reference Exposure Level
HI	Hazard Index
MEI	Maximally Exposed Individual
WFrac	Weight fraction of speciated component

* Key to Toxicological Endpoints

ALIM	Alimentary Tract	EYE	Eye	NS	Nervous System
BN	Bone	HEM	Hematologic System	REPRO	Reproductive System
CVS	Cardiovascular System	IMMUN	Immune System	RESP	Respiratory System
DEV	Developmental System	KIDN	Kidney	SK	Skin
ENDC	Endocrine System				

Chronic HI

Miscellaneous Site Upgrades

Garvey Reservoir Rehab - Unmitigated Misc. Site Upgrades

Cancer Risk Summary & Maximum Annual GLC for Chronic Calculations

Cancer Risk Summary

Max Risk: 2.335584

XY	X	Y	Offroad Risk	Haul Risk	Total Risk
7449041451	574490	4145130	0.051978883	0	0.051979
7448041451	574480	4145140	0.056746316	0	0.056746
7449041451	574490	4145140	0.063878811	0	0.063879
7449041451	574490	4145150	0.069787958	0	0.069788
7450041451	574500	4145150	0.076375509	0	0.076376
7446041451	574460	4145160	0.079389961	0	0.07939
7449041451	574490	4145160	0.079769809	0	0.07977
7450041451	574500	4145160	0.080532733	0	0.080533
7451041451	574510	4145160	0.083055564	0	0.083056
7446041451	574460	4145170	0.082265513	0	0.082266
7447041451	574470	4145170	0.078145786	0	0.078146
7448041451	574480	4145170	0.071804883	0	0.071805
7449041451	574490	4145170	0.067049988	0	0.06705
7450041451	574500	4145170	0.061168844	0	0.061169
7451041451	574510	4145170	0.054710201	0	0.05471
7452041451	574520	4145170	0.048513132	0	0.048513
7446041451	574460	4145180	0.042140791	0	0.042141
7447041451	574470	4145180	0.037154791	0	0.037155
7448041451	574480	4145180	0.060635721	0	0.060636
7449041451	574490	4145180	0.066855512	0	0.066856
7450041451	574500	4145180	0.078079734	0	0.07808
7451041451	574510	4145180	0.088387135	0	0.088387
7452041451	574520	4145180	0.097628204	0	0.097628
7453041451	574530	4145180	0.103597181	0	0.103597
7445041451	574450	4145190	0.106625667	0	0.106626
7446041451	574460	4145190	0.108335909	0	0.108336
7447041451	574470	4145190	0.111822901	0	0.111823
7448041451	574480	4145190	0.111244792	0	0.111245
7449041451	574490	4145190	0.105508012	0	0.105508
7450041451	574500	4145190	0.096120886	0	0.096121
7451041451	574510	4145190	0.086620833	0	0.086621
7452041451	574520	4145190	0.077322134	0	0.077322
7444041452	574440	4145200	0.066906473	0	0.066906
7445041452	574450	4145200	0.057441282	0	0.057441
7446041452	574460	4145200	0.049280502	0	0.049281
7447041452	574470	4145200	0.042560064	0	0.04256
7448041452	574480	4145200	0.069268957	0	0.069269
7449041452	574490	4145200	0.080295972	0	0.080296
7450041452	574500	4145200	0.095554607	0	0.095555
7451041452	574510	4145200	0.113774498	0	0.113774
7443041452	574430	4145210	0.132853926	0	0.132854
7444041452	574440	4145210	0.147993134	0	0.147993
7445041452	574450	4145210	0.149570629	0	0.149571
7446041452	574460	4145210	0.157192665	0	0.157193
7447041452	574470	4145210	0.159193827	0	0.159194
7448041452	574480	4145210	0.158196892	0	0.158197
7449041452	574490	4145210	0.152512086	0	0.152512
7450041452	574500	4145210	0.138323104	0	0.138323
7451041452	574510	4145210	0.120022746	0	0.120023
7443041452	574430	4145220	0.102759567	0	0.10276
7444041452	574440	4145220	0.084219765	0	0.08422
7445041452	574450	4145220	0.069033192	0	0.069033
7446041452	574460	4145220	0.05723407	0	0.057234
7447041452	574470	4145220	0.048117395	0	0.048117
7448041452	574480	4145220	0.080134787	0	0.080135
7449041452	574490	4145220	0.097337996	0	0.097338
7450041452	574500	4145220	0.122931382	0	0.122931
7451041452	574510	4145220	0.159493055	0	0.159493
7452041452	574520	4145220	0.196372896	0	0.196373
7453041452	574530	4145220	0.220976404	0	0.220976
7444041452	574440	4145230	0.245803674	0	0.245804
7445041452	574450	4145230	0.264619353	0	0.264619

Max GLC for Chronic Calcs

Max GLC: 0.065283

XY	X	Y	2025	2026	2027	2034	2035
57449041451	574490	4145130	0.0005588	0.0014529	0		
57448041451	574480	4145140	0.0006101	0.0015861	0		
57449041451	574490	4145140	0.0006867	0.0017855	0		
57449041451	574490	4145150	0.0007503	0.0019507	0		
57450041451	574500	4145150	0.0008211	0.0021348	0		
57446041451	574460	4145160	0.0008535	0.0022191	0		
57449041451	574490	4145160	0.0008576	0.0022297	0		
57450041451	574500	4145160	0.0008658	0.002251	0		
57451041451	574510	4145160	0.0008929	0.0023215	0		
57446041451	574460	4145170	0.0008844	0.0022994	0		
57447041451	574470	4145170	0.0008401	0.0021843	0		
57448041451	574480	4145170	0.0007719	0.002007	0		
57449041451	574490	4145170	0.0007208	0.0018741	0		
57450041451	574500	4145170	0.0006576	0.0017097	0		
57451041451	574510	4145170	0.0005882	0.0015292	0		
57452041451	574520	4145170	0.0005215	0.001356	0		
57446041451	574460	4145180	0.000453	0.0011779	0		
57447041451	574470	4145180	0.0003994	0.0010385	0		
57448041451	574480	4145180	0.0006519	0.0016948	0		
57449041451	574490	4145180	0.0007187	0.0018687	0		
57450041451	574500	4145180	0.0008394	0.0021824	0		
57451041451	574510	4145180	0.0009502	0.0024705	0		
57452041451	574520	4145180	0.0010496	0.0027288	0		
57453041451	574530	4145180	0.0011137	0.0028957	0		
57445041451	574450	4145190	0.0011463	0.0029803	0		
57446041451	574460	4145190	0.0011647	0.0030281	0		
57447041451	574470	4145190	0.0012022	0.0031256	0		
57448041451	574480	4145190	0.0011959	0.0031094	0		
57449041451	574490	4145190	0.0011343	0.0029491	0		
57450041451	574500	4145190	0.0010333	0.0026867	0		
57451041451	574510	4145190	0.0009312	0.0024212	0		
57452041451	574520	4145190	0.0008313	0.0021613	0		
57444041452	574440	4145200	0.0007193	0.0018701	0		
57445041452	574450	4145200	0.0006175	0.0016056	0		
57446041452	574460	4145200	0.0005298	0.0013775	0		
57447041452	574470	4145200	0.0004575	0.0011896	0		
57448041452	574480	4145200	0.0007447	0.0019362	0		
57449041452	574490	4145200	0.0008632	0.0022444	0		
57450041452	574500	4145200	0.0010273	0.0026709	0		
57451041452	574510	4145200	0.0012231	0.0031801	0		
57443041452	574430	4145210	0.0014282	0.0037134	0		
57444041452	574440	4145210	0.001591	0.0041366	0		
57445041452	574450	4145210	0.001608	0.0041807	0		
57446041452	574460	4145210	0.0016899	0.0043937	0		
57447041452	574470	4145210	0.0017114	0.0044497	0		
57448041452	574480	4145210	0.0017007	0.0044218	0		
57449041452	574490	4145210	0.0016396	0.0042629	0		
57450041452	574500	4145210	0.001487	0.0038663	0		
57451041452	574510	4145210	0.0012903	0.0033548	0		
57443041452	574430	4145220	0.0011047	0.0028723	0		
57444041452	574440	4145220	0.0009054	0.0023541	0		
57445041452	574450	4145220	0.0007421	0.0019296	0		
57446041452	574460	4145220	0.0006153	0.0015998	0		
57447041452	574470	4145220	0.0005173	0.0013449	0		
57448041452	574480	4145220	0.0008615	0.0022399	0		
57449041452	574490	4145220	0.0010464	0.0027207	0		
57450041452	574500	4145220	0.0013216	0.0034361	0		
57451041452	574510	4145220	0.0017146	0.004458	0		
57452041452	574520	4145220	0.0021111	0.0054889	0		
57453041452	574530	4145220	0.0023756	0.0061766	0		
57444041452	574440	4145230	0.0026425	0.0068705	0		
57445041452	574450	4145230	0.0028448	0.0073965	0		

Garvey Reservoir Rehab - Unmitigated Misc. Site Upgrades

Cancer Risk Summary & Maximum Annual GLC for Chronic Calculations

Cancer Risk Summary

Max Risk: 2.335584

XY	X	Y	Offroad Risk	Haul Risk	Total Risk
7446041452	574460	4145230	0.266528001	0	0.266528
7447041452	574470	4145230	0.254479963	0	0.25448
7448041452	574480	4145230	0.2473518	0	0.247352
7449041452	574490	4145230	0.235332743	0	0.235333
7450041452	574500	4145230	0.190619773	0	0.19062
7451041452	574510	4145230	0.148109167	0	0.148109
7452041452	574520	4145230	0.109624547	0	0.109625
7444041452	574440	4145240	0.083781402	0	0.083781
7445041452	574450	4145240	0.066335478	0	0.066335
7446041452	574460	4145240	0.054012165	0	0.054012
7447041452	574470	4145240	0.090907242	0	0.090907
7448041452	574480	4145240	0.120670239	0	0.12067
7449041452	574490	4145240	0.160936781	0	0.160937
7450041452	574500	4145240	0.226986512	0	0.226987
7451041452	574510	4145240	0.326270251	0	0.32627
7445041452	574450	4145250	0.488776224	0	0.488776
7446041452	574460	4145250	0.598611103	0	0.598611
7447041452	574470	4145250	0.636072362	0	0.636072
7448041452	574480	4145250	0.593512146	0	0.593512
7446041452	574460	4145260	0.49677199	0	0.496772
7447041452	574470	4145260	0.533514029	0	0.533514
7448041452	574480	4145260	0.582551004	0	0.582551
7447041452	574470	4145270	0.441620141	0	0.44162
7449041451	574490	4145130	0.247395744	0	0.247396
7448041451	574480	4145140	0.146496582	0	0.146497
7449041451	574490	4145140	0.101933664	0	0.101934
7449041451	574490	4145150	0.076453775	0	0.076454
7450041451	574500	4145150	0.060324731	0	0.060325
7446041451	574460	4145160	0.100468691	0	0.100469
7449041451	574490	4145160	0.139417753	0	0.139418
7450041451	574500	4145160	0.21105431	0	0.211054
7451041451	574510	4145160	0.361393895	0	0.361394
7446041451	574460	4145170	0.687056029	0	0.687056
7447041451	574470	4145170	0.44552668	0	0.445527
7448041451	574480	4145170	0.195348247	0	0.195348
7449041451	574490	4145170	0.121003256	0	0.121003
7450041451	574500	4145170	0.086204337	0	0.086204
7451041451	574510	4145170	0.067022937	0	0.067023
7452041451	574520	4145170	0.106964369	0	0.106964
7446041451	574460	4145180	0.155190702	0	0.155191
7447041451	574470	4145180	0.255433559	0	0.255434
7448041451	574480	4145180	0.603665241	0	0.603665
7449041451	574490	4145180	0.507035762	0	0.507036
7450041451	574500	4145180	0.241425539	0	0.241426
7451041451	574510	4145180	0.142504799	0	0.142505
7452041451	574520	4145180	0.10008841	0	0.100088
7453041451	574530	4145180	0.073102863	0	0.073103
7445041451	574450	4145190	0.110713143	0	0.110713
7446041451	574460	4145190	0.163148743	0	0.163149
7447041451	574470	4145190	0.277160474	0	0.27716
7448041451	574480	4145190	0.679244973	0	0.679245
7449041451	574490	4145190	0.675254739	0	0.675255
7450041451	574500	4145190	0.286477242	0	0.286477
7451041451	574510	4145190	0.167146552	0	0.167147
7452041451	574520	4145190	0.111814367	0	0.111814
7444041452	574440	4145200	0.080557261	0	0.080557
7445041452	574450	4145200	0.108833562	0	0.108834
7446041452	574460	4145200	0.162044546	0	0.162045
7447041452	574470	4145200	0.276366439	0	0.276366
7448041452	574480	4145200	0.631483593	0	0.631484
7449041452	574490	4145200	0.633954907	0	0.633955
7450041452	574500	4145200	0.298529274	0	0.298529

Max GLC for Chronic Calcs

Max GLC: 0.065283

XY	X	Y	2025	2026	2027	2034	2035
57446041452	574460	4145230	0.0028653	0.0074498	0		
57447041452	574470	4145230	0.0027358	0.007113	0		
57448041452	574480	4145230	0.0026592	0.0069138	0		
57449041452	574490	4145230	0.0025299	0.0065779	0		
57450041452	574500	4145230	0.0020493	0.0053281	0		
57451041452	574510	4145230	0.0015922	0.0041398	0		
57452041452	574520	4145230	0.0011785	0.0030641	0		
57444041452	574440	4145240	0.0009007	0.0023418	0		
57445041452	574450	4145240	0.0007131	0.0018542	0		
57446041452	574460	4145240	0.0005807	0.0015097	0		
57447041452	574470	4145240	0.0009773	0.002541	0		
57448041452	574480	4145240	0.0012973	0.0033729	0		
57449041452	574490	4145240	0.0017302	0.0044984	0		
57450041452	574500	4145240	0.0024402	0.0063446	0		
57451041452	574510	4145240	0.0035076	0.0091197	0		
57445041452	574450	4145250	0.0052546	0.0136619	0		
57446041452	574460	4145250	0.0064354	0.016732	0		
57447041452	574470	4145250	0.0068381	0.0177791	0		
57448041452	574480	4145250	0.0063806	0.0165894	0		
57446041452	574460	4145260	0.0053405	0.0138854	0		
57447041452	574470	4145260	0.0057355	0.0149124	0		
57448041452	574480	4145260	0.0062627	0.0162831	0		
57447041452	574470	4145270	0.0047476	0.0123439	0		
57449041451	574490	4145130	0.0026596	0.006915	0		
57448041451	574480	4145140	0.0015749	0.0040948	0		
57449041451	574490	4145140	0.0010958	0.0028492	0		
57449041451	574490	4145150	0.0008219	0.002137	0		
57450041451	574500	4145150	0.0006485	0.0016862	0		
57446041451	574460	4145160	0.0010801	0.0028082	0		
57449041451	574490	4145160	0.0014988	0.0038969	0		
57450041451	574500	4145160	0.0022689	0.0058992	0		
57451041451	574510	4145160	0.0038852	0.0101014	0		
57446041451	574460	4145170	0.0073862	0.0192041	0		
57447041451	574470	4145170	0.0047896	0.0124531	0		
57448041451	574480	4145170	0.0021001	0.0054602	0		
57449041451	574490	4145170	0.0013008	0.0033822	0		
57450041451	574500	4145170	0.0009267	0.0024095	0		
57451041451	574510	4145170	0.0007205	0.0018734	0		
57452041451	574520	4145170	0.0011499	0.0029898	0		
57446041451	574460	4145180	0.0016684	0.0043378	0		
57447041451	574470	4145180	0.002746	0.0071397	0		
57448041451	574480	4145180	0.0064897	0.0168732	0		
57449041451	574490	4145180	0.0054509	0.0141723	0		
57450041451	574500	4145180	0.0025954	0.0067482	0		
57451041451	574510	4145180	0.001532	0.0039832	0		
57452041451	574520	4145180	0.001076	0.0027976	0		
57453041451	574530	4145180	0.0007859	0.0020433	0		
57445041451	574450	4145190	0.0011902	0.0030946	0		
57446041451	574460	4145190	0.0017539	0.0045602	0		
57447041451	574470	4145190	0.0029796	0.007747	0		
57448041451	574480	4145190	0.0073022	0.0189858	0		
57449041451	574490	4145190	0.0072593	0.0188743	0		
57450041451	574500	4145190	0.0030798	0.0080074	0		
57451041451	574510	4145190	0.0017969	0.004672	0		
57452041451	574520	4145190	0.0012021	0.0031254	0		
57444041452	574440	4145200	0.000866	0.0022517	0		
57445041452	574450	4145200	0.00117	0.003042	0		
57446041452	574460	4145200	0.0017421	0.0045294	0		
57447041452	574470	4145200	0.0029711	0.0077248	0		
57448041452	574480	4145200	0.0067888	0.0176508	0		
57449041452	574490	4145200	0.0068153	0.0177199	0		
57450041452	574500	4145200	0.0032093	0.0083443	0		

Garvey Reservoir Rehab - Unmitigated Misc. Site Upgrades

Cancer Risk Summary & Maximum Annual GLC for Chronic Calculations

Cancer Risk Summary

Max Risk: 2.335584

XY	X	Y	Offroad Risk	Haul Risk	Total Risk
7451041452(	574510	4145200	0.176697947	0	0.176698
7443041452:	574430	4145210	0.120509567	0	0.12051
7444041452:	574440	4145210	0.085592619	0	0.085593
7445041452:	574450	4145210	0.102329036	0	0.102329
7446041452:	574460	4145210	0.152321697	0	0.152322
7447041452:	574470	4145210	0.251509039	0	0.251509
7448041452:	574480	4145210	0.532048826	0	0.532049
7449041452:	574490	4145210	0.785383098	0	0.785383
7450041452:	574500	4145210	0.469264519	0	0.469265
7451041452:	574510	4145210	0.281455181	0	0.281455
7443041452:	574430	4145220	0.176780821	0	0.176781
7444041452:	574440	4145220	0.121785853	0	0.121786
7445041452:	574450	4145220	0.090883122	0	0.090883
7446041452:	574460	4145220	0.093179966	0	0.09318
7447041452:	574470	4145220	0.137330235	0	0.13733
7448041452:	574480	4145220	0.214651925	0	0.214652
7449041452:	574490	4145220	0.397069419	0	0.397069
7450041452:	574500	4145220	0.589348865	0	0.589349
7451041452:	574510	4145220	0.465287395	0	0.465287
7452041452:	574520	4145220	0.347179076	0	0.347179
7453041452:	574530	4145220	0.246543888	0	0.246544
7444041452:	574440	4145230	0.173125034	0	0.173125
7445041452:	574450	4145230	0.124406371	0	0.124406
7446041452:	574460	4145230	0.094963723	0	0.094964
7447041452:	574470	4145230	0.084612419	0	0.084612
7448041452:	574480	4145230	0.118835015	0	0.118835
7449041452:	574490	4145230	0.174947976	0	0.174948
7450041452:	574500	4145230	0.287686196	0	0.287686
7451041452:	574510	4145230	0.456377102	0	0.456377
7452041452:	574520	4145230	0.398761311	0	0.398761
7444041452(	574440	4145240	0.334741944	0	0.334742
7445041452(	574450	4145240	0.267838417	0	0.267838
7446041452(	574460	4145240	0.204814224	0	0.204814
7447041452(	574470	4145240	0.154586914	0	0.154587
7448041452(	574480	4145240	0.12052004	0	0.12052
7449041452(	574490	4145240	0.09305539	0	0.093055
7450041452(	574500	4145240	0.079090214	0	0.07909
7451041452(	574510	4145240	0.09947743	0	0.099477
7445041452!	574450	4145250	0.138634202	0	0.138634
7446041452!	574460	4145250	0.212251574	0	0.212252
7447041452!	574470	4145250	0.340414561	0	0.340415
7448041452!	574480	4145250	1.554232172	0	1.554232
7446041452(	574460	4145260	0.968387916	0	0.968388
7447041452(	574470	4145260	0.482860052	0	0.48286
7448041452(	574480	4145260	0.356560496	0	0.35656
7447041452:	574470	4145270	0.296933215	0	0.296933
7449041451:	574490	4145130	0.25715726	0	0.257157
7448041451(	574480	4145140	0.212295649	0	0.212296
7449041451(	574490	4145140	0.174281143	0	0.174281
7449041451!	574490	4145150	0.139157861	0	0.139158
7450041451!	574500	4145150	0.109742019	0	0.109742
7446041451(	574460	4145160	0.08826477	0	0.088265
7449041451(	574490	4145160	0.070170378	0	0.07017
7450041451(	574500	4145160	0.089287232	0	0.089287
7451041451(	574510	4145160	0.114120962	0	0.114121
7446041451:	574460	4145170	0.160247954	0	0.160248
7447041451:	574470	4145170	0.226603835	0	0.226604
7448041451:	574480	4145170	0.322804418	0	0.322804
7449041451:	574490	4145170	0.428318454	0	0.428318
7450041451:	574500	4145170	0.508590825	0	0.508591
7451041451:	574510	4145170	0.467252797	0	0.467253
7452041451:	574520	4145170	0.359920524	0	0.359921

Max GLC for Chronic Calcs

Max GLC: 0.065283

XY	X	Y	2025	2026	2027	2034	2035
57451041452(	574510	4145200	0.0018996	0.0049389	0		
57443041452:	574430	4145210	0.0012955	0.0033684	0		
57444041452:	574440	4145210	0.0009202	0.0023924	0		
57445041452:	574450	4145210	0.0011001	0.0028602	0		
57446041452:	574460	4145210	0.0016375	0.0042576	0		
57447041452:	574470	4145210	0.0027038	0.00703	0		
57448041452:	574480	4145210	0.0057198	0.0148715	0		
57449041452:	574490	4145210	0.0084433	0.0219525	0		
57450041452:	574500	4145210	0.0050448	0.0131166	0		
57451041452:	574510	4145210	0.0030258	0.007867	0		
57443041452:	574430	4145220	0.0019005	0.0049413	0		
57444041452:	574440	4145220	0.0013093	0.0034041	0		
57445041452:	574450	4145220	0.000977	0.0025403	0		
57446041452:	574460	4145220	0.0010017	0.0026045	0		
57447041452:	574470	4145220	0.0014764	0.0038386	0		
57448041452:	574480	4145220	0.0023076	0.0059998	0		
57449041452:	574490	4145220	0.0042687	0.0110986	0		
57450041452:	574500	4145220	0.0063358	0.0164731	0		
57451041452:	574510	4145220	0.0050021	0.0130054	0		
57452041452:	574520	4145220	0.0037324	0.0097041	0		
57453041452:	574530	4145220	0.0026505	0.0068912	0		
57444041452:	574440	4145230	0.0018612	0.0048391	0		
57445041452:	574450	4145230	0.0013374	0.0034773	0		
57446041452:	574460	4145230	0.0010209	0.0026544	0		
57447041452:	574470	4145230	0.0009096	0.002365	0		
57448041452:	574480	4145230	0.0012775	0.0033216	0		
57449041452:	574490	4145230	0.0018808	0.00489	0		
57450041452:	574500	4145230	0.0030928	0.0080412	0		
57451041452:	574510	4145230	0.0049063	0.0127563	0		
57452041452:	574520	4145230	0.0042869	0.0111459	0		
57444041452(	574440	4145240	0.0035986	0.0093565	0		
57445041452(	574450	4145240	0.0028794	0.0074864	0		
57446041452(	574460	4145240	0.0022019	0.0057248	0		
57447041452(	574470	4145240	0.0016619	0.0043209	0		
57448041452(	574480	4145240	0.0012957	0.0033687	0		
57449041452(	574490	4145240	0.0010004	0.002601	0		
57450041452(	574500	4145240	0.0008503	0.0022107	0		
57451041452(	574510	4145240	0.0010694	0.0027805	0		
57445041452!	574450	4145250	0.0014904	0.003875	0		
57446041452!	574460	4145250	0.0022818	0.0059327	0		
57447041452!	574470	4145250	0.0036596	0.009515	0		
57448041452!	574480	4145250	0.0167088	0.0434428	0		
57446041452(	574460	4145260	0.0104107	0.0270677	0		
57447041452(	574470	4145260	0.005191	0.0134966	0		
57448041452(	574480	4145260	0.0038332	0.0099663	0		
57447041452:	574470	4145270	0.0031922	0.0082997	0		
57449041451:	574490	4145130	0.0027646	0.0071879	0		
57448041451(	574480	4145140	0.0022823	0.0059339	0		
57449041451(	574490	4145140	0.0018736	0.0048714	0		
57449041451!	574490	4145150	0.001496	0.0038896	0		
57450041451!	574500	4145150	0.0011798	0.0030674	0		
57446041451(	574460	4145160	0.0009489	0.0024671	0		
57449041451(	574490	4145160	0.0007544	0.0019614	0		
57450041451(	574500	4145160	0.0009599	0.0024957	0		
57451041451(	574510	4145160	0.0012269	0.0031898	0		
57446041451:	574460	4145170	0.0017227	0.0044791	0		
57447041451:	574470	4145170	0.0024361	0.0063339	0		
57448041451:	574480	4145170	0.0034703	0.0090228	0		
57449041451:	574490	4145170	0.0046046	0.0119721	0		
57450041451:	574500	4145170	0.0054676	0.0142158	0		
57451041451:	574510	4145170	0.0050232	0.0130603	0		
57452041451:	574520	4145170	0.0038693	0.0100603	0		

Garvey Reservoir Rehab - Unmitigated Misc. Site Upgrades

Cancer Risk Summary & Maximum Annual GLC for Chronic Calculations

Cancer Risk Summary

Max Risk: 2.335584

XY	X	Y	Offroad Risk	Haul Risk	Total Risk
7446041451	574460	4145180	0.281741385	0	0.281741
7447041451	574470	4145180	0.207808416	0	0.207808
7448041451	574480	4145180	0.177704146	0	0.177704
7449041451	574490	4145180	0.149297734	0	0.149298
7450041451	574500	4145180	0.123777319	0	0.123777
7451041451	574510	4145180	0.100970767	0	0.100971
7452041451	574520	4145180	0.083246257	0	0.083246
7453041451	574530	4145180	0.062519399	0	0.062519
7445041451	574450	4145190	0.076872701	0	0.076873
7446041451	574460	4145190	0.095012546	0	0.095013
7447041451	574470	4145190	0.124543255	0	0.124543
7448041451	574480	4145190	0.162422331	0	0.162422
7449041451	574490	4145190	0.209210661	0	0.209211
7450041451	574500	4145190	0.258205988	0	0.258206
7451041451	574510	4145190	0.291697235	0	0.291697
7452041451	574520	4145190	0.289124709	0	0.289125
7444041452	574440	4145200	0.25809766	0	0.258098
7445041452	574450	4145200	0.220759791	0	0.22076
7446041452	574460	4145200	0.194526877	0	0.194527
7447041452	574470	4145200	0.170277424	0	0.170277
7448041452	574480	4145200	0.147664742	0	0.147665
7449041452	574490	4145200	0.126988631	0	0.126989
7450041452	574500	4145200	0.108195134	0	0.108195
7451041452	574510	4145200	0.091362155	0	0.091362
7443041452	574430	4145210	0.077328469	0	0.077328
7444041452	574440	4145210	0.055354258	0	0.055354
7445041452	574450	4145210	0.066695064	0	0.066695
7446041452	574460	4145210	0.080915265	0	0.080915
7447041452	574470	4145210	0.099851317	0	0.099851
7448041452	574480	4145210	0.124396762	0	0.124397
7449041452	574490	4145210	0.150634352	0	0.150634
7450041452	574500	4145210	0.178168774	0	0.178169
7451041452	574510	4145210	0.202929633	0	0.20293
7443041452	574430	4145220	0.206510689	0	0.206511
7444041452	574440	4145220	0.192493102	0	0.192493
7445041452	574450	4145220	0.174544872	0	0.174545
7446041452	574460	4145220	0.158201548	0	0.158202
7447041452	574470	4145220	0.140765443	0	0.140765
7448041452	574480	4145220	0.124968149	0	0.124968
7449041452	574490	4145220	0.109903833	0	0.109904
7450041452	574500	4145220	0.095058204	0	0.095058
7451041452	574510	4145220	0.082151158	0	0.082151
7452041452	574520	4145220	0.071256544	0	0.071257
7453041452	574530	4145220	0.175829461	0	0.175829
7444041452	574440	4145230	0.204229465	0	0.204229
7445041452	574450	4145230	0.232489894	0	0.23249
7446041452	574460	4145230	0.27332774	0	0.273328
7447041452	574470	4145230	0.30098846	0	0.300988
7448041452	574480	4145230	0.336391571	0	0.336392
7449041452	574490	4145230	0.385141674	0	0.385142
7450041452	574500	4145230	0.386990853	0	0.386991
7451041452	574510	4145230	0.40813671	0	0.408137
7452041452	574520	4145230	0.42116335	0	0.421163
7444041452	574440	4145240	0.416103082	0	0.416103
7445041452	574450	4145240	0.402406855	0	0.402407
7446041452	574460	4145240	0.383585729	0	0.383586
7447041452	574470	4145240	0.371000284	0	0.371
7448041452	574480	4145240	0.369906126	0	0.369906
7449041452	574490	4145240	0.37486964	0	0.37487
7450041452	574500	4145240	0.375350224	0	0.37535
7451041452	574510	4145240	0.373951744	0	0.373952
7445041452	574450	4145250	0.336744569	0	0.336745

Max GLC for Chronic Calcs

Max GLC: 0.065283

XY	X	Y	2025	2026	2027	2034	2035
574460414518	574460	4145180	0.0030289	0.007875	0		
574470414518	574470	4145180	0.002234	0.0058085	0		
574480414518	574480	4145180	0.0019104	0.0049671	0		
574490414518	574490	4145180	0.001605	0.0041731	0		
574500414518	574500	4145180	0.0013307	0.0034597	0		
574510414518	574510	4145180	0.0010855	0.0028223	0		
574520414518	574520	4145180	0.0008949	0.0023268	0		
574530414518	574530	4145180	0.0006721	0.0017475	0		
574450414519	574450	4145190	0.0008264	0.0021487	0		
574460414519	574460	4145190	0.0010214	0.0026557	0		
574470414519	574470	4145190	0.0013389	0.0034811	0		
574480414519	574480	4145190	0.0017461	0.0045399	0		
574490414519	574490	4145190	0.0022491	0.0058477	0		
574500414519	574500	4145190	0.0027758	0.0072172	0		
574510414519	574510	4145190	0.0031359	0.0081533	0		
574520414519	574520	4145190	0.0031082	0.0080814	0		
574440414520	574440	4145200	0.0027747	0.0072142	0		
574450414520	574450	4145200	0.0023733	0.0061705	0		
574460414520	574460	4145200	0.0020913	0.0054373	0		
574470414520	574470	4145200	0.0018306	0.0047595	0		
574480414520	574480	4145200	0.0015875	0.0041274	0		
574490414520	574490	4145200	0.0013652	0.0035495	0		
574500414520	574500	4145200	0.0011632	0.0030242	0		
574510414520	574510	4145200	0.0009822	0.0025537	0		
574430414521	574430	4145210	0.0008313	0.0021614	0		
574440414521	574440	4145210	0.0005951	0.0015472	0		
574450414521	574450	4145210	0.000717	0.0018642	0		
574460414521	574460	4145210	0.0008699	0.0022617	0		
574470414521	574470	4145210	0.0010735	0.002791	0		
574480414521	574480	4145210	0.0013373	0.0034771	0		
574490414521	574490	4145210	0.0016194	0.0042104	0		
574500414521	574500	4145210	0.0019154	0.0049801	0		
574510414521	574510	4145210	0.0021816	0.0056721	0		
574430414522	574430	4145220	0.0022201	0.0057722	0		
574440414522	574440	4145220	0.0020694	0.0053804	0		
574450414522	574450	4145220	0.0018764	0.0048788	0		
574460414522	574460	4145220	0.0017007	0.0044219	0		
574470414522	574470	4145220	0.0015133	0.0039346	0		
574480414522	574480	4145220	0.0013435	0.003493	0		
574490414522	574490	4145220	0.0011815	0.003072	0		
574500414522	574500	4145220	0.0010219	0.002657	0		
574510414522	574510	4145220	0.0008832	0.0022962	0		
574520414522	574520	4145220	0.000766	0.0019917	0		
574530414522	574530	4145220	0.0018903	0.0049147	0		
574440414523	574440	4145230	0.0021956	0.0057085	0		
574450414523	574450	4145230	0.0024994	0.0064984	0		
574460414523	574460	4145230	0.0029384	0.0076399	0		
574470414523	574470	4145230	0.0032358	0.008413	0		
574480414523	574480	4145230	0.0036164	0.0094026	0		
574490414523	574490	4145230	0.0041405	0.0107652	0		
574500414523	574500	4145230	0.0041603	0.0108169	0		
574510414523	574510	4145230	0.0043877	0.011408	0		
574520414523	574520	4145230	0.0045277	0.0117721	0		
574440414524	574440	4145240	0.0044733	0.0116306	0		
574450414524	574450	4145240	0.0043261	0.0112478	0		
574460414524	574460	4145240	0.0041237	0.0107217	0		
574470414524	574470	4145240	0.0039884	0.0103699	0		
574480414524	574480	4145240	0.0039767	0.0103394	0		
574490414524	574490	4145240	0.00403	0.0104781	0		
574500414524	574500	4145240	0.0040352	0.0104915	0		
574510414524	574510	4145240	0.0040202	0.0104524	0		
574450414525	574450	4145250	0.0036202	0.0094125	0		

Garvey Reservoir Rehab - Unmitigated Misc. Site Upgrades

Cancer Risk Summary & Maximum Annual GLC for Chronic Calculations

Cancer Risk Summary

Max Risk: 2.335584

XY	X	Y	Offroad Risk	Haul Risk	Total Risk
7446041452	574460	4145250	0.283608721	0	0.283609
7447041452	574470	4145250	0.231589249	0	0.231589
7448041452	574480	4145250	0.19066958	0	0.19067
7446041452	574460	4145260	0.153555288	0	0.153555
7447041452	574470	4145260	0.207218973	0	0.207219
7448041452	574480	4145260	0.245542565	0	0.245543
7447041452	574470	4145270	0.296771526	0	0.296772
7449041451	574490	4145130	0.362042152	0	0.362042
7448041451	574480	4145140	0.46551742	0	0.465517
7449041451	574490	4145140	0.596787332	0	0.596787
7449041451	574490	4145150	0.700836539	0	0.700837
7450041451	574500	4145150	0.711708024	0	0.711708
7446041451	574460	4145160	0.746022749	0	0.746023
7449041451	574490	4145160	0.74908095	0	0.749081
7450041451	574500	4145160	0.725272051	0	0.725272
7451041451	574510	4145160	0.67875124	0	0.678751
7446041451	574460	4145170	0.588213253	0	0.588213
7447041451	574470	4145170	0.547357144	0	0.547357
7448041451	574480	4145170	0.581429202	0	0.581429
7449041451	574490	4145170	0.614366792	0	0.614367
7450041451	574500	4145170	0.644985571	0	0.644986
7451041451	574510	4145170	0.686187559	0	0.686188
7452041451	574520	4145170	0.640273034	0	0.640273
7446041451	574460	4145180	0.490883541	0	0.490884
7447041451	574470	4145180	0.343675895	0	0.343676
7448041451	574480	4145180	0.250312296	0	0.250312
7449041451	574490	4145180	0.185350423	0	0.18535
7450041451	574500	4145180	0.24728361	0	0.247284
7451041451	574510	4145180	0.311942736	0	0.311943
7452041451	574520	4145180	0.390704602	0	0.390705
7453041451	574530	4145180	0.535631584	0	0.535632
7445041451	574450	4145190	0.940701268	0	0.940701
7446041451	574460	4145190	1.568841327	0	1.568841
7447041451	574470	4145190	1.270968023	0	1.270968
7448041451	574480	4145190	1.879546346	0	1.879546
7449041451	574490	4145190	1.295913978	0	1.295914
7450041451	574500	4145190	1.861959903	0	1.86196
7451041451	574510	4145190	1.284105251	0	1.284105
7452041451	574520	4145190	1.647406477	0	1.647406
7444041452	574440	4145200	1.192563404	0	1.192563
7445041452	574450	4145200	0.851535922	0	0.851536
7446041452	574460	4145200	1.505026143	0	1.505026
7447041452	574470	4145200	1.484946783	0	1.484947
7448041452	574480	4145200	1.578535577	0	1.578536
7449041452	574490	4145200	1.316317685	0	1.316318
7450041452	574500	4145200	1.310402053	0	1.310402
7451041452	574510	4145200	1.207285381	0	1.207285
7443041452	574430	4145210	0.330028105	0	0.330028
7444041452	574440	4145210	0.223158113	0	0.223158
7445041452	574450	4145210	0.297388154	0	0.297388
7446041452	574460	4145210	0.401989735	0	0.40199
7447041452	574470	4145210	0.573239458	0	0.573239
7448041452	574480	4145210	0.852369397	0	0.852369
7449041452	574490	4145210	0.425284639	0	0.425285
7450041452	574500	4145210	0.263347691	0	0.263348
7451041452	574510	4145210	0.352582814	0	0.352583
7443041452	574430	4145220	0.556388432	0	0.556388
7444041452	574440	4145220	1.296581143	0	1.296581
7445041452	574450	4145220	0.451387806	0	0.451388
7446041452	574460	4145220	0.298212753	0	0.298213
7447041452	574470	4145220	0.40120222	0	0.401202
7448041452	574480	4145220	0.71220398	0	0.712204

Max GLC for Chronic Calcs

Max GLC: 0.065283

XY	X	Y	2025	2026	2027	2034	2035
57446041452	574460	4145250	0.0030489	0.0079272	0		
57447041452	574470	4145250	0.0024897	0.0064732	0		
57448041452	574480	4145250	0.0020498	0.0053295	0		
57446041452	574460	4145260	0.0016508	0.0042921	0		
57447041452	574470	4145260	0.0022277	0.005792	0		
57448041452	574480	4145260	0.0026397	0.0068632	0		
57447041452	574470	4145270	0.0031904	0.0082952	0		
57449041451	574490	4145130	0.0038921	0.0101196	0		
57448041451	574480	4145140	0.0050045	0.0130118	0		
57449041451	574490	4145140	0.0064158	0.016681	0		
57449041451	574490	4145150	0.0075343	0.0195893	0		
57450041451	574500	4145150	0.0076512	0.0198932	0		
57446041451	574460	4145160	0.0080201	0.0208523	0		
57449041451	574490	4145160	0.008053	0.0209378	0		
57450041451	574500	4145160	0.007797	0.0202723	0		
57451041451	574510	4145160	0.0072969	0.018972	0		
57446041451	574460	4145170	0.0063236	0.0164413	0		
57447041451	574470	4145170	0.0058844	0.0152994	0		
57448041451	574480	4145170	0.0062507	0.0162517	0		
57449041451	574490	4145170	0.0066048	0.0171724	0		
57450041451	574500	4145170	0.0069339	0.0180282	0		
57451041451	574510	4145170	0.0073769	0.0191798	0		
57452041451	574520	4145170	0.0068833	0.0178965	0		
57446041451	574460	4145180	0.0052772	0.0137208	0		
57447041451	574470	4145180	0.0036947	0.0096062	0		
57448041451	574480	4145180	0.002691	0.0069966	0		
57449041451	574490	4145180	0.0019926	0.0051808	0		
57450041451	574500	4145180	0.0026584	0.0069119	0		
57451041451	574510	4145180	0.0033535	0.0087192	0		
57452041451	574520	4145180	0.0042003	0.0109207	0		
57453041451	574530	4145180	0.0057583	0.0149716	0		
57445041451	574450	4145190	0.010113	0.0262938	0		
57446041451	574460	4145190	0.0168658	0.0438512	0		
57447041451	574470	4145190	0.0136635	0.0355252	0		
57448041451	574480	4145190	0.0202061	0.0525358	0		
57449041451	574490	4145190	0.0139317	0.0362225	0		
57450041451	574500	4145190	0.020017	0.0520442	0		
57451041451	574510	4145190	0.0138048	0.0358924	0		
57452041451	574520	4145190	0.0177105	0.0460472	0		
57444041452	574440	4145200	0.0128207	0.0333337	0		
57445041452	574450	4145200	0.0091544	0.0238015	0		
57446041452	574460	4145200	0.0161798	0.0420675	0		
57447041452	574470	4145200	0.0159639	0.0415062	0		
57448041452	574480	4145200	0.0169701	0.0441221	0		
57449041452	574490	4145200	0.0141511	0.0367928	0		
57450041452	574500	4145200	0.0140875	0.0366275	0		
57451041452	574510	4145200	0.0129789	0.0337452	0		
57443041452	574430	4145210	0.003548	0.0092247	0		
57444041452	574440	4145210	0.0023991	0.0062376	0		
57445041452	574450	4145210	0.0031971	0.0083124	0		
57446041452	574460	4145210	0.0043216	0.0112361	0		
57447041452	574470	4145210	0.0061626	0.0160228	0		
57448041452	574480	4145210	0.0091634	0.0238248	0		
57449041452	574490	4145210	0.004572	0.0118873	0		
57450041452	574500	4145210	0.0028311	0.0073609	0		
57451041452	574510	4145210	0.0037904	0.0098552	0		
57443041452	574430	4145220	0.0059815	0.0155518	0		
57444041452	574440	4145220	0.0139389	0.0362411	0		
57445041452	574450	4145220	0.0048526	0.0126169	0		
57446041452	574460	4145220	0.0032059	0.0083354	0		
57447041452	574470	4145220	0.0043131	0.0112141	0		
57448041452	574480	4145220	0.0076566	0.019907	0		

Garvey Reservoir Rehab - Unmitigated Misc. Site Upgrades

Cancer Risk Summary & Maximum Annual GLC for Chronic Calculations

Cancer Risk Summary

Max Risk: 2.335584

XY	X	Y	Offroad Risk	Haul Risk	Total Risk
7449041452	574490	4145220	0.480034147	0	0.480034
7450041452	574500	4145220	0.325678888	0	0.325679
7451041452	574510	4145220	0.425966436	0	0.425966
7452041452	574520	4145220	0.776350442	0	0.77635
7453041452	574530	4145220	0.554405823	0	0.554406
7444041452	574440	4145230	0.362109467	0	0.362109
7445041452	574450	4145230	0.432015089	0	0.432015
7446041452	574460	4145230	0.759925677	0	0.759926
7447041452	574470	4145230	0.623625994	0	0.623626
7448041452	574480	4145230	0.387760855	0	0.387761
7449041452	574490	4145230	0.438140096	0	0.43814
7450041452	574500	4145230	0.726048628	0	0.726049
7451041452	574510	4145230	1.11844737	0	1.118447
7452041452	574520	4145230	0.619950985	0	0.619951
7444041452	574440	4145240	0.398543554	0	0.398544
7445041452	574450	4145240	0.426557564	0	0.426558
7446041452	574460	4145240	0.695045919	0	0.695046
7447041452	574470	4145240	2.33558416	0	2.335584
7448041452	574480	4145240	0.88075656	0	0.880757
7449041452	574490	4145240	0.573740838	0	0.573741
7450041452	574500	4145240	0.392770672	0	0.392771
7451041452	574510	4145240	0.402651972	0	0.402652
7445041452	574450	4145250	0.643022734	0	0.643023
7446041452	574460	4145250	1.081046218	0	1.081046
7447041452	574470	4145250	0.665162279	0	0.665162
7448041452	574480	4145250	0.471091295	0	0.471091
7446041452	574460	4145260	0.351293596	0	0.351294
7447041452	574470	4145260	0.365918392	0	0.365918
7448041452	574480	4145260	0.56304632	0	0.563046
7447041452	574470	4145270	0.81345164	0	0.813452
7457041450	574570	4145030	0.70105532	0	0.701055
7463041450	574630	4145080	0.572060383	0	0.57206
7461041450	574610	4145090	0.442718419	0	0.442718
7462041450	574620	4145090	0.339350959	0	0.339351
7463041450	574630	4145090	0.330670922	0	0.330671
7464041450	574640	4145090	0.480367541	0	0.480368
7460041451	574600	4145100	0.842848096	0	0.842848
7461041451	574610	4145100	0.702900502	0	0.702901
7462041451	574620	4145100	0.61395677	0	0.613957
7463041451	574630	4145100	0.534784746	0	0.534785
7464041451	574640	4145100	0.458443809	0	0.458444
7465041451	574650	4145100	0.380504221	0	0.380504
7459041451	574590	4145110	0.311116982	0	0.311117
7460041451	574600	4145110	0.291626441	0	0.291626
7461041451	574610	4145110	0.405251769	0	0.405252
7462041451	574620	4145110	0.628946592	0	0.628947
7463041451	574630	4145110	0.609327041	0	0.609327
7464041451	574640	4145110	0.547165695	0	0.547166
7465041451	574650	4145110	0.491105146	0	0.491105
7466041451	574660	4145110	0.434810987	0	0.434811
7460041451	574600	4145120	0.379702536	0	0.379703
7461041451	574610	4145120	0.326131676	0	0.326132
7462041451	574620	4145120	0.275784636	0	0.275785
7463041451	574630	4145120	0.258368499	0	0.258368
7464041451	574640	4145120	0.342811319	0	0.342811
7465041451	574650	4145120	0.486573291	0	0.486573
7466041451	574660	4145120	0.519254188	0	0.519254
7460041451	574600	4145130	0.490006437	0	0.490006
7462041451	574620	4145130	0.446856153	0	0.446856
7463041451	574630	4145130	0.410220949	0	0.410221
7464041451	574640	4145130	0.37085847	0	0.370858
7465041451	574650	4145130	0.33007924	0	0.330079

Max GLC for Chronic Calcs

Max GLC: 0.065283

XY	X	Y	2025	2026	2027	2034	2035
57449041452	574490	4145220	0.0051606	0.0134176	0		
57450041452	574500	4145220	0.0035012	0.0091032	0		
57451041452	574510	4145220	0.0045794	0.0119063	0		
57452041452	574520	4145220	0.0083462	0.0217	0		
57453041452	574530	4145220	0.0059601	0.0154964	0		
57444041452	574440	4145230	0.0038929	0.0101214	0		
57445041452	574450	4145230	0.0046444	0.0120754	0		
57446041452	574460	4145230	0.0081696	0.0212409	0		
57447041452	574470	4145230	0.0067043	0.0174312	0		
57448041452	574480	4145230	0.0041686	0.0108384	0		
57449041452	574490	4145230	0.0047102	0.0122466	0		
57450041452	574500	4145230	0.0078054	0.020294	0		
57451041452	574510	4145230	0.0120239	0.0312621	0		
57452041452	574520	4145230	0.0066648	0.0173284	0		
57444041452	574440	4145240	0.0042845	0.0111398	0		
57445041452	574450	4145240	0.0045857	0.0119228	0		
57446041452	574460	4145240	0.0074721	0.0194274	0		
57447041452	574470	4145240	0.0251087	0.0652826	0		
57448041452	574480	4145240	0.0094686	0.0246183	0		
57449041452	574490	4145240	0.006168	0.0160368	0		
57450041452	574500	4145240	0.0042225	0.0109785	0		
57451041452	574510	4145240	0.0043287	0.0112547	0		
57445041452	574450	4145250	0.0069128	0.0179733	0		
57446041452	574460	4145250	0.0116218	0.0302167	0		
57447041452	574470	4145250	0.0071508	0.0185922	0		
57448041452	574480	4145250	0.0050645	0.0131676	0		
57446041452	574460	4145260	0.0037766	0.0098191	0		
57447041452	574470	4145260	0.0039338	0.0102279	0		
57448041452	574480	4145260	0.006053	0.0157379	0		
57447041452	574470	4145270	0.008745	0.022737	0		
57457041450	574570	4145030	0.0075367	0.0195954	0		
57463041450	574630	4145080	0.0061499	0.0159898	0		
57461041450	574610	4145090	0.0047594	0.0123746	0		
57462041450	574620	4145090	0.0036482	0.0094853	0		
57463041450	574630	4145090	0.0035549	0.0092427	0		
57464041450	574640	4145090	0.0051642	0.0134269	0		
57460041451	574600	4145100	0.009061	0.0235587	0		
57461041451	574610	4145100	0.0075565	0.019647	0		
57462041451	574620	4145100	0.0066003	0.0171609	0		
57463041451	574630	4145100	0.0057492	0.0149479	0		
57464041451	574640	4145100	0.0049285	0.0128141	0		
57465041451	574650	4145100	0.0040906	0.0106356	0		
57459041451	574590	4145110	0.0033447	0.0086961	0		
57460041451	574600	4145110	0.0031351	0.0081513	0		
57461041451	574610	4145110	0.0043567	0.0113273	0		
57462041451	574620	4145110	0.0067615	0.0175799	0		
57463041451	574630	4145110	0.0065506	0.0170315	0		
57464041451	574640	4145110	0.0058823	0.015294	0		
57465041451	574650	4145110	0.0052796	0.013727	0		
57466041451	574660	4145110	0.0046744	0.0121535	0		
57460041451	574600	4145120	0.004082	0.0106132	0		
57461041451	574610	4145120	0.0035061	0.0091158	0		
57462041451	574620	4145120	0.0029648	0.0077085	0		
57463041451	574630	4145120	0.0027776	0.0072217	0		
57464041451	574640	4145120	0.0036854	0.009582	0		
57465041451	574650	4145120	0.0052309	0.0136004	0		
57466041451	574660	4145120	0.0055822	0.0145138	0		
57460041451	574600	4145130	0.0052678	0.0136963	0		
57462041451	574620	4145130	0.0048039	0.0124902	0		
57463041451	574630	4145130	0.0044101	0.0114662	0		
57464041451	574640	4145130	0.0039869	0.010366	0		
57465041451	574650	4145130	0.0035485	0.0092261	0		

Garvey Reservoir Rehab - Unmitigated Misc. Site Upgrades

Cancer Risk Summary & Maximum Annual GLC for Chronic Calculations

Cancer Risk Summary

Max Risk: 2.335584

XY	X	Y	Offroad Risk	Haul Risk	Total Risk
7463041451	574630	4145140	0.28631007	0	0.28631
7464041451	574640	4145140	0.247389331	0	0.247389
7459041451	574590	4145150	0.225642325	0	0.225642
7460041451	574600	4145150	0.289966783	0	0.289967
7460041451	574600	4145160	0.390620602	0	0.390621
7461041451	574610	4145160	0.567133657	0	0.567134
7461041451	574610	4145170	0.481739207	0	0.481739
7457041450	574570	4145030	0.433348784	0	0.433349
7463041450	574630	4145080	0.403471824	0	0.403472
7461041450	574610	4145090	0.378723696	0	0.378724
7462041450	574620	4145090	0.349434907	0	0.349435
7463041450	574630	4145090	0.317875215	0	0.317875
7464041450	574640	4145090	0.286387462	0	0.286387
7460041451	574600	4145100	0.254271397	0	0.254271
7461041451	574610	4145100	0.224954854	0	0.224955
7462041451	574620	4145100	0.197600036	0	0.1976
7463041451	574630	4145100	0.247829354	0	0.247829
7464041451	574640	4145100	0.319050771	0	0.319051
7465041451	574650	4145100	0.431554042	0	0.431554
7459041451	574590	4145110	0.673489976	0	0.67349
7460041451	574600	4145110	0.505903783	0	0.505904
7461041451	574610	4145110	0.424444982	0	0.424445
7462041451	574620	4145110	0.379659352	0	0.379659
7463041451	574630	4145110	0.348113782	0	0.348114
7464041451	574640	4145110	0.329415245	0	0.329415
7465041451	574650	4145110	0.303431141	0	0.303431
7466041451	574660	4145110	0.277857583	0	0.277858
7460041451	574600	4145120	0.252005864	0	0.252006
7461041451	574610	4145120	0.226579873	0	0.22658
7462041451	574620	4145120	0.202572538	0	0.202573
7463041451	574630	4145120	0.173154651	0	0.173155
7464041451	574640	4145120	0.212614017	0	0.212614
7465041451	574650	4145120	0.265322747	0	0.265323
7466041451	574660	4145120	0.336912559	0	0.336913
7460041451	574600	4145130	0.434581555	0	0.434582
7462041451	574620	4145130	1.122223196	0	1.122223
7463041451	574630	4145130	1.29352118	0	1.293521
7464041451	574640	4145130	1.09353055	0	1.093531
7465041451	574650	4145130	0.824125373	0	0.824125
7463041451	574630	4145140	0.590107291	0	0.590107
7464041451	574640	4145140	0.452691592	0	0.452692
7459041451	574590	4145150	0.385284474	0	0.385284
7460041451	574600	4145150	0.341065341	0	0.341065
7460041451	574600	4145160	0.30884388	0	0.308844
7461041451	574610	4145160	0.284570666	0	0.284571
7461041451	574610	4145170	0.268320221	0	0.26832
7457041450	574570	4145030	0.246744181	0	0.246744
7463041450	574630	4145080	0.224644542	0	0.224645
7461041450	574610	4145090	0.203640764	0	0.203641
7462041450	574620	4145090	0.184072428	0	0.184072
7463041450	574630	4145090	0.151442267	0	0.151442
7464041450	574640	4145090	0.183531468	0	0.183531
7460041451	574600	4145100	0.220907824	0	0.220908
7461041451	574610	4145100	0.270649269	0	0.270649
7462041451	574620	4145100	0.333242223	0	0.333242
7463041451	574630	4145100	0.408102571	0	0.408103
7464041451	574640	4145100	0.49133258	0	0.491333
7465041451	574650	4145100	0.579015188	0	0.579015
7459041451	574590	4145110	0.666087995	0	0.666088
7460041451	574600	4145110	0.7106757	0	0.710676
7461041451	574610	4145110	0.673358201	0	0.673358
7462041451	574620	4145110	0.586153308	0	0.586153

Max GLC for Chronic Calcs

Max GLC: 0.065283

XY	X	Y	2025	2026	2027	2034	2035
57463041451	574630	4145140	0.003078	0.0080027	0		
57464041451	574640	4145140	0.0026596	0.0069149	0		
57459041451	574590	4145150	0.0024258	0.006307	0		
57460041451	574600	4145150	0.0031173	0.008105	0		
57460041451	574600	4145160	0.0041994	0.0109184	0		
57461041451	574610	4145160	0.006097	0.0158521	0		
57461041451	574610	4145170	0.0051789	0.0134652	0		
57457041450	574570	4145030	0.0046587	0.0121127	0		
57463041450	574630	4145080	0.0043375	0.0112776	0		
57461041450	574610	4145090	0.0040715	0.0105858	0		
57462041450	574620	4145090	0.0037566	0.0097672	0		
57463041450	574630	4145090	0.0034173	0.008885	0		
57464041450	574640	4145090	0.0030788	0.0080049	0		
57460041451	574600	4145100	0.0027335	0.0071072	0		
57461041451	574610	4145100	0.0024184	0.0062878	0		
57462041451	574620	4145100	0.0021243	0.0055232	0		
57463041451	574630	4145100	0.0026643	0.0069272	0		
57464041451	574640	4145100	0.00343	0.0089179	0		
57465041451	574650	4145100	0.0046394	0.0120625	0		
57459041451	574590	4145110	0.0072404	0.0188249	0		
57460041451	574600	4145110	0.0054387	0.0141407	0		
57461041451	574610	4145110	0.004563	0.0118638	0		
57462041451	574620	4145110	0.0040815	0.010612	0		
57463041451	574630	4145110	0.0037424	0.0097302	0		
57464041451	574640	4145110	0.0035414	0.0092076	0		
57465041451	574650	4145110	0.003262	0.0084813	0		
57466041451	574660	4145110	0.0029871	0.0077665	0		
57460041451	574600	4145120	0.0027092	0.0070439	0		
57461041451	574610	4145120	0.0024358	0.0063332	0		
57462041451	574620	4145120	0.0021778	0.0056622	0		
57463041451	574630	4145120	0.0018615	0.0048399	0		
57464041451	574640	4145120	0.0022857	0.0059428	0		
57465041451	574650	4145120	0.0028524	0.0074161	0		
57466041451	574660	4145120	0.003622	0.0094171	0		
57460041451	574600	4145130	0.004672	0.0121471	0		
57462041451	574620	4145130	0.0120645	0.0313676	0		
57463041451	574630	4145130	0.013906	0.0361556	0		
57464041451	574640	4145130	0.011756	0.0305656	0		
57465041451	574650	4145130	0.0088598	0.0230354	0		
57463041451	574630	4145140	0.006344	0.0164943	0		
57464041451	574640	4145140	0.0048667	0.0126533	0		
57459041451	574590	4145150	0.004142	0.0107692	0		
57460041451	574600	4145150	0.0036666	0.0095332	0		
57460041451	574600	4145160	0.0033202	0.0086326	0		
57461041451	574610	4145160	0.0030593	0.0079541	0		
57461041451	574610	4145170	0.0028846	0.0074999	0		
57457041450	574570	4145030	0.0026526	0.0068968	0		
57463041450	574630	4145080	0.002415	0.0062791	0		
57461041450	574610	4145090	0.0021892	0.005692	0		
57462041450	574620	4145090	0.0019789	0.0051451	0		
57463041450	574630	4145090	0.0016281	0.004233	0		
57464041450	574640	4145090	0.0019731	0.0051299	0		
57460041451	574600	4145100	0.0023749	0.0061747	0		
57461041451	574610	4145100	0.0029096	0.007565	0		
57462041451	574620	4145100	0.0035825	0.0093146	0		
57463041451	574630	4145100	0.0043873	0.011407	0		
57464041451	574640	4145100	0.0052821	0.0137334	0		
57465041451	574650	4145100	0.0062247	0.0161842	0		
57459041451	574590	4145110	0.0071608	0.018618	0		
57460041451	574600	4145110	0.0076401	0.0198643	0		
57461041451	574610	4145110	0.0072389	0.0188212	0		
57462041451	574620	4145110	0.0063014	0.0163838	0		

Garvey Reservoir Rehab - Unmitigated Misc. Site Upgrades

Cancer Risk Summary & Maximum Annual GLC for Chronic Calculations

Cancer Risk Summary

Max Risk: 2.335584

XY	X	Y	Offroad Risk	Haul Risk	Total Risk
7463041451	574630	4145110	0.479637148	0	0.479637
7464041451	574640	4145110	0.39266322	0	0.392663
7465041451	574650	4145110	0.331394861	0	0.331395
7466041451	574660	4145110	0.303231657	0	0.303232
7460041451	574600	4145120	0.276700254	0	0.2767
7461041451	574610	4145120	0.256430261	0	0.25643
7462041451	574620	4145120	0.23969834	0	0.239698
7463041451	574630	4145120	0.221319735	0	0.22132
7464041451	574640	4145120	0.204362486	0	0.204362
7465041451	574650	4145120	0.184822559	0	0.184823
7466041451	574660	4145120	0.168610736	0	0.168611
7460041451	574600	4145130	0.133554462	0	0.133554
7462041451	574620	4145130	0.159791695	0	0.159792
7463041451	574630	4145130	0.188550363	0	0.18855
7464041451	574640	4145130	0.224054331	0	0.224054
7465041451	574650	4145130	0.265707935	0	0.265708
7463041451	574630	4145140	0.313637263	0	0.313637
7464041451	574640	4145140	0.361180351	0	0.36118
7459041451	574590	4145150	0.408217296	0	0.408217
7460041451	574600	4145150	0.448394719	0	0.448395
7460041451	574600	4145160	0.473777407	0	0.473777
7461041451	574610	4145160	0.46574647	0	0.465746
7461041451	574610	4145170	0.43056082	0	0.430561
7457041450	574570	4145030	0.383540176	0	0.38354
7463041450	574630	4145080	0.339165065	0	0.339165
7461041450	574610	4145090	0.292597337	0	0.292597
7462041450	574620	4145090	0.269748483	0	0.269748
7463041450	574630	4145090	0.249698389	0	0.249698
7464041450	574640	4145090	0.231174887	0	0.231175
7460041451	574600	4145100	0.215552983	0	0.215553
7461041451	574610	4145100	0.200763572	0	0.200764
7462041451	574620	4145100	0.1859921	0	0.185992
7463041451	574630	4145100	0.171666601	0	0.171667
7464041451	574640	4145100	0.157718452	0	0.157718
7465041451	574650	4145100	0	0	0
7459041451	574590	4145110	0	0	0
7460041451	574600	4145110	0	0	0
7461041451	574610	4145110	0	0	0
7462041451	574620	4145110	0	0	0
7463041451	574630	4145110	0	0	0
7464041451	574640	4145110	0	0	0
7465041451	574650	4145110	0	0	0
7466041451	574660	4145110	0	0	0
7460041451	574600	4145120	0	0	0
7461041451	574610	4145120	0	0	0
7462041451	574620	4145120	0	0	0
7463041451	574630	4145120	0	0	0
7464041451	574640	4145120	0	0	0
7465041451	574650	4145120	0	0	0
7466041451	574660	4145120	0	0	0
7460041451	574600	4145130	0	0	0
7462041451	574620	4145130	0	0	0
7463041451	574630	4145130	0	0	0
7464041451	574640	4145130	0	0	0
7465041451	574650	4145130	0	0	0
7463041451	574630	4145140	0	0	0
7464041451	574640	4145140	0	0	0
7459041451	574590	4145150	0	0	0
7460041451	574600	4145150	0	0	0
7460041451	574600	4145160	0	0	0
7461041451	574610	4145160	0	0	0
7461041451	574610	4145170	0	0	0

Max GLC for Chronic Calcs

Max GLC: 0.065283

XY	X	Y	2025	2026	2027	2034	2035
57463041451	574630	4145110	0.0051563	0.0134065	0		
57464041451	574640	4145110	0.0042213	0.0109755	0		
57465041451	574650	4145110	0.0035627	0.0092629	0		
57466041451	574660	4145110	0.0032599	0.0084757	0		
57460041451	574600	4145120	0.0029747	0.0077341	0		
57461041451	574610	4145120	0.0027568	0.0071676	0		
57462041451	574620	4145120	0.0025769	0.0066999	0		
57463041451	574630	4145120	0.0023793	0.0061862	0		
57464041451	574640	4145120	0.002197	0.0057122	0		
57465041451	574650	4145120	0.0019869	0.005166	0		
57466041451	574660	4145120	0.0018127	0.0047129	0		
57460041451	574600	4145130	0.0014358	0.003733	0		
57462041451	574620	4145130	0.0017178	0.0044664	0		
57463041451	574630	4145130	0.002027	0.0052702	0		
57464041451	574640	4145130	0.0024087	0.0062626	0		
57465041451	574650	4145130	0.0028565	0.0074269	0		
57463041451	574630	4145140	0.0033718	0.0087666	0		
57464041451	574640	4145140	0.0038829	0.0100955	0		
57459041451	574590	4145150	0.0043885	0.0114102	0		
57460041451	574600	4145150	0.0048205	0.0125332	0		
57460041451	574600	4145160	0.0050933	0.0132427	0		
57461041451	574610	4145160	0.005007	0.0130182	0		
57461041451	574610	4145170	0.0046287	0.0120347	0		
57457041450	574570	4145030	0.0041233	0.0107205	0		
57463041450	574630	4145080	0.0036462	0.0094801	0		
57461041450	574610	4145090	0.0031456	0.0081785	0		
57462041450	574620	4145090	0.0028999	0.0075398	0		
57463041450	574630	4145090	0.0026844	0.0069794	0		
57464041450	574640	4145090	0.0024852	0.0064616	0		
57460041451	574600	4145100	0.0023173	0.006025	0		
57461041451	574610	4145100	0.0021583	0.0056116	0		
57462041451	574620	4145100	0.0019995	0.0051987	0		
57463041451	574630	4145100	0.0018455	0.0047983	0		
57464041451	574640	4145100	0.0016956	0.0044084	0		
57465041451	574650	4145100	0	0	0		
57459041451	574590	4145110	0	0	0		
57460041451	574600	4145110	0	0	0		
57461041451	574610	4145110	0	0	0		
57462041451	574620	4145110	0	0	0		
57463041451	574630	4145110	0	0	0		
57464041451	574640	4145110	0	0	0		
57465041451	574650	4145110	0	0	0		
57466041451	574660	4145110	0	0	0		
57460041451	574600	4145120	0	0	0		
57461041451	574610	4145120	0	0	0		
57462041451	574620	4145120	0	0	0		
57463041451	574630	4145120	0	0	0		
57464041451	574640	4145120	0	0	0		
57465041451	574650	4145120	0	0	0		
57466041451	574660	4145120	0	0	0		
57460041451	574600	4145130	0	0	0		
57462041451	574620	4145130	0	0	0		
57463041451	574630	4145130	0	0	0		
57464041451	574640	4145130	0	0	0		
57465041451	574650	4145130	0	0	0		
57463041451	574630	4145140	0	0	0		
57464041451	574640	4145140	0	0	0		
57459041451	574590	4145150	0	0	0		
57460041451	574600	4145150	0	0	0		
57460041451	574600	4145160	0	0	0		
57461041451	574610	4145160	0	0	0		
57461041451	574610	4145170	0	0	0		

Garvey Reservoir Rehab - Unmitigated Misc. Site Upgrades

Construction Modeling Assumptions

AERMOD Sources

Volume Sources		
Offroad Construction Exhaust		
Release Height	3.66	m
Emissions rate	1	g/s
Init Vert Dimension	3.4	m
Line Volume		
Onroad Hauling Exhaust		
Plume Height	7.315	m
Plume Width	20	m
Release Height	3.66	m
Emissions rate	1	g/s

Meteorology:

SCAQMD	Pico	Rivera	2010 - 2012, 2015 - 2016

SCAQMD Met Data

https://www.aqmd.gov/home/air-quality/meteorological-data/data-for-aermod

AERMOD Sources

Garvey Reservoir Rehab - Unmitigated Misc. Site Upgrades

Health Risk Assessment Risk Factors

Residential Risk	Abbreviation	UOM	3rd Trimester	0<2	2<16	16<30
Daily Breathing Rate (95th %'ile)	DBR	L/kg-day	361	1090	572	261
Fraction Of Time At Home [a]	FAH	unitless	1	1	1	0.73
Exposure Frequency	EF	days/year	0.96	0.96	0.96	0.96
Age Sensitivity Factor	ASF	unitless	10	10	3	1
Inhalation Absorption Factor	A	unitless	1	1	1	1
Conversion Factor	CF_1	m^3/L	0.001	0.001	0.001	0.001
Conversion Factor	CF_2	$\mu g/m^3$	0.001	0.001	0.001	0.001
Cancer Potency Factor (diesel exhaust)	CPF	$mg/kg\text{-}day^{-1}$	1.1	1.1	1.1	1.1
Averaging Time (for residential exposure)	AT	years	70.00	70.00	70.00	70.00

[a] assume school or daycare will have cancer risk of >1 per million

Garvey Reservoir Rehab - Unmitigated Misc. Site Upgrades

Health Risk Assessment Exposure Duration Assumptions for Offroad Equipment

Residential Receptors

			Start Date	*9/1/2025*	*12/1/2025*
			End Date	*11/30/2025*	*12/1/2027*
	9/1/2025	*11/30/2026*	*Days*	*90*	*730*
Phase	Start Date	End Date	Duration (days)	3rd Tri	0<2
Demolition - 2025	9/1/2025	11/30/2025	91	91	0
Demolition - 2026			1	0	0
Site Preparation - 2025	12/1/2025	12/31/2025	31	0	31
Site Preparation - 2026	1/1/2026	1/31/2026	31	0	31
Grading - 2025	2/1/2026	3/31/2026	59	0	59
Grading - 2026			1	0	0
Infrastructure - 2025	4/1/2026	9/30/2026	183	0	183
Infrastructure - 2026			1	0	0
Paving - 2025	10/1/2026	11/30/2026	61	0	61
Architectural Coating - 2026			1	0	0

Intake Factor for Inhalation, IF (m^3/kg-day)

Phase	Year	Year	Equation	3rd Trimester	0<2
Demolition - 2025		2025		0.012329142	0
Demolition - 2026		1900	$\frac{DBR \cdot FAH \cdot EF \cdot ED \cdot ASF \cdot A \cdot CF_1}{AT}$	0	0
Site Preparation - 2025		2025		0	0.012681554
Site Preparation - 2026		2026		0	0.012681554
Grading - 2025		2026		0	0.02413586
Grading - 2026		1900		0	0
Infrastructure - 2025		2026		0	0.074862075
Infrastructure - 2026		1900		0	0
Paving - 2025		2026		0	0.024954025
Architectural Coating - 2026		1900		0	0

Risk Calculation Part 1, R1

Equation	3rd Trimester	0<2	2<16
	1.35621E-05	0	0
	0	0	0
	0	1.39497E-05	0
	0	1.39497E-05	0
$IF \cdot CPF \cdot CF_2$	0	2.65494E-05	0
	0	0	0
	0	8.23483E-05	0
	0	0	
	0	2.74494E-05	
	0	0	

Exposure Durations

Garvey Reservoir Rehab - Unmitigated Misc. Site Upgrades

Offroad DPM Emissions, Ground Level Concentrations and Health Risk Calculations

Residential Receptors

Phase	Year	Emissions (lbs/day) (Misc1)	Work Hours Per Day	Emissions (g/s) (MISC1)	Emissions (lbs/day) (Misc2)	Emissions (g/s) (MISC2)	Emissions (lbs/day) (Misc3)	Emissions (g/s) (MISC3)	Emissions (lbs/day) (Misc4)	Emissions (g/s) (MISC4)	Emissions (lbs/day) (Misc5)	Emissions (g/s) (MISC5)	Emissions (lbs/day) (Misc6)	Emissions (g/s) (MISC6)	Emissions (lbs/day) (Misc7)	Emissions (g/s) (MISC7)
Demolition - 2025	2025	0.059	10	0.000743624	0.204692321	0.002579066	0.134825383	0.001698762	0.05812873	0.000732406	0.031805623	0.000400742	0.041528889	0.000523252	0.02883	0.000363
Demolition - 2026	1900		10	0		0		0		0		0		0		0
Site Preparation - 2025	2025	0.013	10	0.000168368	0.046345431	0.00058394	0.030526502	0.000384625	0.013161222	0.000165828	0.007201273	9.0734E-05	0.009402767	0.000118472	0.006528	8.22E-05
Site Preparation - 2026	2026	0.011	10	0.000140306	0.038621193	0.000486616	0.025438752	0.000320521	0.010967685	0.00013819	0.006001061	7.56117E-05	0.007835639	9.87269E-05	0.00544	6.85E-05
Grading - 2025	2026	0.071	10	0.000897961	0.247175633	0.003114344	0.16280801	0.002051336	0.070193183	0.000884415	0.03840679	0.000483915	0.050148092	0.000631852	0.034814	0.000439
Grading - 2026	1900		10	0		0		0		0		0		0		0
Infrastructure - 2025	2026	0.014	10	0.000182398	0.050207551	0.000632601	0.033070377	0.000416678	0.01425799	0.000179647	0.007801379	9.82952E-05	0.010186331	0.000128345	0.007072	8.91E-05
Infrastructure - 2026	1900		10	0		0		0		0		0		0		0
Paving - 2025	2026	0.091	10	0.001150512	0.31669378	0.003990254	0.208597763	0.002628274	0.089935016	0.001133156	0.0492087	0.000620016	0.064252243	0.00080956	0.044605	0.000562
Architectural Coating - 2026	1900		10	0		0		0		0		0		0		0

AERMOD Column Identifier:										
	4	*4*	*4*	*4*	*4*	*4*	*4*	*4*	*4*	*4*
	5	*5*	*5*	*5*	*5*	*5*	*5*	*5*	*5*	*5*
	6	*6*	*6*	*6*	*6*	*6*	*6*	*6*	*6*	*6*
	7	*7*	*7*	*7*	*7*	*7*	*7*	*7*	*7*	*7*
	8	*8*	*8*	*8*	*8*	*8*	*8*	*8*	*8*	*8*
	9	*9*	*9*	*9*	*9*	*9*	*9*	*9*	*9*	*9*
	10	*10*	*10*	*10*	*10*	*10*	*10*	*10*	*10*	*10*

Garvey Reservoir Rehab - Unmitigated Misc. Site Upgrades			Demolition - 2025	Demolition - 2026	Site Preparation - 202	Site Preparation - 202	Grading - 2025	Grading - 2026	Infrastructure - 2025	Infrastructure - 2026	Paving - 2025	Architectural Coating - 2	Child Risk			
Unique Identifier	X (UTM)	Y (UTM)	2025	1900	2025	2026	2026	1900	2026	1900	2026	1900	3rd Trimester	0<2	Total	per million
396166.283767377.2	396166.28	3767377	0.000455636	0	0.000103163	8.59691E-05	0.000550202	0	0.00011176	0	0.000704947	0	6.17936E-09	4.57995E-08	5.19789E-08	0.0519789
396266.283767377.2	396266.28	3767377	0.000497427	0	0.000112625	9.38541E-05	0.000600666	0	0.00012201	0	0.000769603	0	6.74613E-09	5.00002E-08	5.67463E-08	0.0567463
396366.283767377.2	396366.28	3767377	0.000559949	0	0.000126781	0.000105651	0.000676164	0	0.000137346	0	0.000866336	0	7.59405E-09	5.62848E-08	6.38788E-08	0.0638788
396466.283767377.2	396466.28	3767377	0.000611747	0	0.000138509	0.000115424	0.000738713	0	0.000150051	0	0.000946476	0	8.29655E-09	6.14914E-08	6.9788E-08	0.069788
396566.283767377.2	396566.28	3767377	0.000669492	0	0.000151583	0.000126319	0.000808443	0	0.000164215	0	0.001035818	0	9.07969E-09	6.72958E-08	7.63755E-08	0.0763755
396666.283767377.2	396666.28	3767377	0.000695916	0	0.000157566	0.000131305	0.000840352	0	0.000170696	0	0.001076701	0	9.43805E-09	6.99519E-08	7.939E-08	0.07939
396766.283767377.2	396766.28	3767377	0.000699246	0	0.00015832	0.000131933	0.000844372	0	0.000171513	0	0.001081852	0	9.48321E-09	7.02866E-08	7.97698E-08	0.0797698
396866.283767377.2	396866.28	3767377	0.000705933	0	0.000159834	0.000133195	0.000852448	0	0.000173153	0	0.001092199	0	9.57391E-09	7.09588E-08	8.05327E-08	0.0805327
396966.283767377.2	396966.28	3767377	0.000728048	0	0.000164841	0.000137368	0.000879152	0	0.000178578	0	0.001126414	0	9.87383E-09	7.31817E-08	8.30556E-08	0.0830556
397066.283767377.2	397066.28	3767377	0.000721123	0	0.000163273	0.000136061	0.00087079	0	0.000176879	0	0.001115699	0	9.77991E-09	7.24856E-08	8.22655E-08	0.0822655
397166.283767377.2	397166.28	3767377	0.00068501	0	0.000155097	0.000129247	0.000827182	0	0.000168021	0	0.001059827	0	9.29014E-09	6.88556E-08	7.81458E-08	0.0781458
397266.283767377.2	397266.28	3767377	0.000629427	0	0.000142512	0.00011876	0.000760063	0	0.000154388	0	0.00097383	0	8.53632E-09	6.32686E-08	7.18049E-08	0.0718049
397366.283767377.2	397366.28	3767377	0.000587747	0	0.000133075	0.000110896	0.000709732	0	0.000144164	0	0.000909344	0	7.97105E-09	5.90789E-08	6.705E-08	0.06705
397466.283767377.2	397466.28	3767377	0.000536194	0	0.000121402	0.000101169	0.000647479	0	0.000131519	0	0.000829583	0	7.27189E-09	5.3897E-08	6.11688E-08	0.0611688
397566.283767377.2	397566.28	3767377	0.000479578	0	0.000108584	9.04865E-05	0.000579114	0	0.000117632	0	0.000741989	0	6.50407E-09	4.82061E-08	5.47102E-08	0.0547102
397666.283767377.2	397666.28	3767377	0.000425256	0	9.62844E-05	8.0237E-05	0.000513517	0	0.000104308	0	0.000657944	0	5.76735E-09	4.27458E-08	4.85131E-08	0.0485131
397766.283767377.2	397766.28	3767377	0.000369398	0	8.36372E-05	6.96977E-05	0.000446065	0	9.0607E-05	0	0.000571521	0	5.00979E-09	3.7131E-08	4.21408E-08	0.0421408
397866.283767377.2	397866.28	3767377	0.000325691	0	7.37414E-05	6.14512E-05	0.000393288	0	7.98865E-05	0	0.0005039	0	4.41704E-09	3.27377E-08	3.71548E-08	0.0371548
396166.283767477.2	396166.28	3767477	0.00053152	0	0.000120344	0.000100287	0.000641836	0	0.000130373	0	0.000822352	0	7.20851E-09	5.34272E-08	6.06357E-08	0.0606357
396266.283767477.2	396266.28	3767477	0.000586042	0	0.000132689	0.000110574	0.000707673	0	0.000143746	0	0.000906706	0	7.94793E-09	5.89076E-08	6.68555E-08	0.0668555
396366.283767477.2	396366.28	3767477	0.000684431	0	0.000154966	0.000129138	0.000826483	0	0.000167879	0	0.001058931	0	9.28229E-09	6.87974E-08	7.80797E-08	0.0780797
396466.283767477.2	396466.28	3767477	0.000774784	0	0.000175423	0.000146186	0.000935588	0	0.000190041	0	0.001198722	0	1.05077E-08	7.78795E-08	8.83871E-08	0.0883871
396566.283767477.2	396566.28	3767477	0.000855789	0	0.000193764	0.00016147	0.001033405	0	0.00020991	0	0.001324051	0	1.16063E-08	8.60219E-08	9.76282E-08	0.0976282
396666.283767477.2	396666.28	3767477	0.000908112	0	0.00020561	0.000171342	0.001096588	0	0.000222744	0	0.001405003	0	1.23159E-08	9.12813E-08	1.03597E-07	0.1035972
396766.283767477.2	396766.28	3767477	0.000934659	0	0.000211621	0.000176351	0.001128645	0	0.000229256	0	0.001446076	0	1.26759E-08	9.39498E-08	1.06626E-07	0.1066257
396866.283767477.2	396866.28	3767477	0.00094965	0	0.000215015	0.000179179	0.001146748	0	0.000232933	0	0.001469271	0	1.28792E-08	9.54567E-08	1.08336E-07	0.1083359
396966.283767477.2	396966.28	3767477	0.000980217	0	0.000221936	0.000184947	0.001183658	0	0.000240431	0	0.001516562	0	1.32938E-08	9.85291E-08	1.11823E-07	0.1118229
397066.283767477.2	397066.28	3767477	0.000975149	0	0.000220788	0.00018399	0.001177539	0	0.000239188	0	0.001508721	0	1.3225E-08	9.80198E-08	1.11245E-07	0.1112448
397166.283767477.2	397166.28	3767477	0.000924862	0	0.000209403	0.000174502	0.001116814	0	0.000226853	0	0.001430918	0	1.2543E-08	9.2965E-08	1.05508E-07	0.105508
397266.283767477.2	397266.28	3767477	0.000842576	0	0.000190772	0.000158977	0.00101745	0	0.00020667	0	0.001303608	0	1.14271E-08	8.46938E-08	9.61209E-08	0.0961209
397366.283767477.2	397366.28	3767477	0.000759301	0	0.000171917	0.000143264	0.000916891	0	0.000186244	0	0.001174767	0	1.02977E-08	7.63232E-08	8.66208E-08	0.0866208
397466.283767477.2	397466.28	3767477	0.00067779	0	0.000153462	0.000127885	0.000818463	0	0.00016625	0	0.001048656	0	9.19223E-09	6.81299E-08	7.73221E-08	0.0773221
397566.283767477.2	397566.28	3767477	0.000586488	0	0.00013279	0.000110658	0.000708213	0	0.000143856	0	0.000907397	0	7.95399E-09	5.89525E-08	6.69065E-08	0.0669065
397666.283767477.2	397666.28	3767477	0.000503519	0	0.000114004	9.50035E-05	0.000608022	0	0.000123505	0	0.000779029	0	6.82875E-09	5.06125E-08	5.74413E-08	0.0574413
397766.283767477.2	397766.28	3767477	0.000431983	0	9.78074E-05	8.15062E-05	0.00052164	0	0.000105958	0	0.000668351	0	5.85858E-09	4.34219E-08	4.92805E-08	0.0492805
397866.283767477.2	397866.28	3767477	0.000373073	0	8.44693E-05	7.03911E-05	0.000450503	0	9.15084E-05	0	0.000577207	0	5.05963E-09	3.75004E-08	4.25601E-08	0.0425601

Garvey Reservoir Rehab - Unmitigated Misc. Site Upgrades			Demolition - 2025	Demolition - 2026	Site Preparation - 202	Site Preparation - 202	Grading - 2025	Grading - 2026	Infrastructure - 2025	Infrastructure - 2026	Paving - 2025	Architectural Coating - 2	Child Risk			
Unique Identifier	X (UTM)	Y (UTM)	2025	1900	2025	2026	2026	1900	2026	1900	2026	1900	3rd Trimester	0<2	Total	per million
396166.283767577.2	396166.28	3767577	0.000607198	0	0.000137479	0.000114566	0.00073322	0	0.000148935	0	0.000939438	0	8.23485E-09	6.10341E-08	6.9269E-08	0.069269
396266.283767577.2	396266.28	3767577	0.000703858	0	0.000159364	0.000132803	0.000849942	0	0.000172644	0	0.001088988	0	9.54576E-09	7.07502E-08	8.0296E-08	0.080296
396366.283767577.2	396366.28	3767577	0.000837612	0	0.000189648	0.00015804	0.001011456	0	0.000205452	0	0.001295928	0	1.13597E-08	8.41949E-08	9.55546E-08	0.0955546
396466.283767577.2	396466.28	3767577	0.000997324	0	0.000225809	0.000188174	0.001204316	0	0.000244627	0	0.00154303	0	1.35258E-08	1.00249E-07	1.13774E-07	0.1137745
396566.283767577.2	396566.28	3767577	0.00116457	0	0.000263676	0.00021973	0.001406274	0	0.000285649	0	0.001801788	0	1.5794E-08	1.1706E-07	1.32854E-07	0.1328539
396666.283767577.2	396666.28	3767577	0.001297278	0	0.000293723	0.000244769	0.001566524	0	0.0003182	0	0.002007109	0	1.75938E-08	1.30399E-07	1.47993E-07	0.1479931
396766.283767577.2	396766.28	3767577	0.001311106	0	0.000296854	0.000247378	0.001583222	0	0.000321592	0	0.002028503	0	1.77813E-08	1.31789E-07	1.49571E-07	0.1495706
396866.283767577.2	396866.28	3767577	0.001377919	0	0.000311982	0.000259985	0.001663902	0	0.00033798	0	0.002131874	0	1.86874E-08	1.38505E-07	1.57193E-07	0.1571927
396966.283767577.2	396966.28	3767577	0.001395461	0	0.000315953	0.000263294	0.001685084	0	0.000342283	0	0.002159015	0	1.89253E-08	1.40269E-07	1.59194E-07	0.1591938
397066.283767577.2	397066.28	3767577	0.001386722	0	0.000313975	0.000261646	0.001674532	0	0.000340139	0	0.002145494	0	1.88068E-08	1.3939E-07	1.58197E-07	0.1581969
397166.283767577.2	397166.28	3767577	0.00133689	0	0.000302692	0.000252243	0.001614358	0	0.000327916	0	0.002068396	0	1.8131E-08	1.34381E-07	1.52512E-07	0.1525121
397266.283767577.2	397266.28	3767577	0.001212512	0	0.000274531	0.000228776	0.001464166	0	0.000297409	0	0.001875962	0	1.64442E-08	1.21879E-07	1.38323E-07	0.1383231
397366.283767577.2	397366.28	3767577	0.001052095	0	0.00023821	0.000198508	0.001270454	0	0.000258061	0	0.001627769	0	1.42686E-08	1.05754E-07	1.20023E-07	0.1200227
397466.283767577.2	397466.28	3767577	0.000900769	0	0.000203948	0.000169956	0.001087722	0	0.000220943	0	0.001393643	0	1.22163E-08	9.05433E-08	1.0276E-07	0.1027596
397566.283767577.2	397566.28	3767577	0.000738253	0	0.000167152	0.000139293	0.000891476	0	0.000181081	0	0.001142203	0	1.00122E-08	7.42075E-08	8.42198E-08	0.0842198
397666.283767577.2	397666.28	3767577	0.000605131	0	0.000137011	0.000114176	0.000730724	0	0.000148428	0	0.00093624	0	8.20682E-09	6.08264E-08	6.90332E-08	0.0690332
397766.283767577.2	397766.28	3767577	0.000501702	0	0.000113593	9.46608E-05	0.000605829	0	0.000123059	0	0.000776218	0	6.80411E-09	5.043E-08	5.72341E-08	0.0572341
397866.283767577.2	397866.28	3767577	0.000421787	0	9.5499E-05	7.95825E-05	0.000509328	0	0.000103457	0	0.000652577	0	5.7203E-09	4.23971E-08	4.81174E-08	0.0481174
396166.283767677.2	396166.28	3767677	0.000702445	0	0.000159044	0.000132537	0.000848236	0	0.000172298	0	0.001086802	0	9.5266E-09	7.06082E-08	8.01348E-08	0.0801348
396266.283767677.2	396266.28	3767677	0.000853245	0	0.000193188	0.00016099	0.001030334	0	0.000209287	0	0.001320115	0	1.15718E-08	8.57662E-08	9.7338E-08	0.097338
396366.283767677.2	396366.28	3767677	0.001077591	0	0.000243983	0.000203319	0.001301242	0	0.000264315	0	0.001667217	0	1.46144E-08	1.08317E-07	1.22931E-07	0.1229314
396466.283767677.2	396466.28	3767677	0.001398084	0	0.000316547	0.000263789	0.001688252	0	0.000342926	0	0.002163073	0	1.89609E-08	1.40532E-07	1.59493E-07	0.1594931
396566.283767677.2	396566.28	3767677	0.001721365	0	0.000389743	0.000324786	0.002078629	0	0.000422222	0	0.002663244	0	2.33452E-08	1.73028E-07	1.96373E-07	0.1963729
396666.283767677.2	396666.28	3767677	0.001937034	0	0.000438574	0.000365478	0.00233906	0	0.000475122	0	0.002996921	0	2.62702E-08	1.94706E-07	2.20976E-07	0.2209764
396766.283767677.2	396766.28	3767677	0.002154665	0	0.000487849	0.000406541	0.002601859	0	0.000528503	0	0.003333632	0	2.92217E-08	2.16582E-07	2.45804E-07	0.2458037
396866.283767677.2	396866.28	3767677	0.002319599	0	0.000525192	0.00043766	0.002801026	0	0.000568958	0	0.003588814	0	3.14585E-08	2.33161E-07	2.64619E-07	0.2646194
396966.283767677.2	396966.28	3767677	0.00233633	0	0.00052898	0.000440817	0.002821229	0	0.000573062	0	0.003614699	0	3.16854E-08	2.34843E-07	2.66528E-07	0.266528
397066.283767677.2	397066.28	3767677	0.002230719	0	0.000505069	0.00042089	0.002693699	0	0.000547158	0	0.003451302	0	3.02531E-08	2.24227E-07	2.5448E-07	0.25448
397166.283767677.2	397166.28	3767677	0.002168235	0	0.000490921	0.000409101	0.002618247	0	0.000531831	0	0.003354628	0	2.94057E-08	2.17946E-07	2.47352E-07	0.2473518
397266.283767677.2	397266.28	3767677	0.002062879	0	0.000467067	0.000389222	0.002491023	0	0.000505989	0	0.003191624	0	2.79769E-08	2.07356E-07	2.35333E-07	0.2353327
397366.283767677.2	397366.28	3767677	0.001670934	0	0.000378325	0.000315271	0.002017732	0	0.000409852	0	0.002585219	0	2.26613E-08	1.67958E-07	1.9062E-07	0.1906198
397466.283767677.2	397466.28	3767677	0.001298295	0	0.000293954	0.000244961	0.001567752	0	0.00031845	0	0.002008682	0	1.76075E-08	1.30502E-07	1.48109E-07	0.1481092
397566.283767677.2	397566.28	3767677	0.000960946	0	0.000217573	0.000181311	0.001160388	0	0.000235704	0	0.001486747	0	1.30324E-08	9.65921E-08	1.09625E-07	0.1096245
397666.283767677.2	397666.28	3767677	0.000734411	0	0.000166282	0.000138568	0.000886836	0	0.000180138	0	0.001136258	0	9.96012E-09	7.38213E-08	8.37814E-08	0.0837814
397766.283767677.2	397766.28	3767677	0.000581483	0	0.000131657	0.000109714	0.000702168	0	0.000142628	0	0.000899653	0	7.88611E-09	5.84494E-08	6.63355E-08	0.0663355
397866.283767677.2	397866.28	3767677	0.00047346	0	0.000107198	8.9332E-05	0.000571725	0	0.000116132	0	0.000732522	0	6.42109E-09	4.75911E-08	5.40122E-08	0.0540122
396166.283767777.2	396166.28	3767777	0.000796874	0	0.000180424	0.000150354	0.000962263	0	0.00019546	0	0.0012329	0	1.08073E-08	8.01E-08	9.09072E-08	0.0909072
396266.283767777.2	396266.28	3767777	0.001057771	0	0.000239495	0.000199579	0.001277308	0	0.000259453	0	0.001636551	0	1.43455E-08	1.06325E-07	1.2067E-07	0.1206702
396366.283767777.2	396366.28	3767777	0.001410739	0	0.000319413	0.000266177	0.001703534	0	0.00034603	0	0.002182653	0	1.91325E-08	1.41804E-07	1.60937E-07	0.1609368
396466.283767777.2	396466.28	3767777	0.001989717	0	0.000450502	0.000375418	0.002402678	0	0.000488044	0	0.003078431	0	2.69847E-08	2.00002E-07	2.26987E-07	0.2269865
396566.283767777.2	396566.28	3767777	0.002860018	0	0.000647551	0.000539626	0.003453607	0	0.000701514	0	0.004424934	0	3.87877E-08	2.87483E-07	3.2627E-07	0.3262703
396666.283767777.2	396666.28	3767777	0.004284513	0	0.000970078	0.000808399	0.005173751	0	0.001050918	0	0.006628869	0	5.81068E-08	4.30669E-07	4.88776E-07	0.4887762
396766.283767777.2	396766.28	3767777	0.005247303	0	0.001188069	0.000990057	0.006336366	0	0.001287074	0	0.008118468	0	7.11642E-08	5.27447E-07	5.98611E-07	0.5986111
396866.283767777.2	396866.28	3767777	0.005575681	0	0.001262418	0.001052015	0.006732897	0	0.00136762	0	0.008626525	0	7.56177E-08	5.60455E-07	6.36072E-07	0.6360724
396966.283767777.2	396966.28	3767777	0.005202606	0	0.001177949	0.000981624	0.006282393	0	0.001276111	0	0.008049315	0	7.0558E-08	5.22954E-07	5.93512E-07	0.5935121
397066.283767777.2	397066.28	3767777	0.004354602	0	0.000985948	0.000821623	0.005258387	0	0.00106811	0	0.006737309	0	5.90574E-08	4.37715E-07	4.96772E-07	0.496772
397166.283767777.2	397166.28	3767777	0.004676675	0	0.00105887	0.000882392	0.005647306	0	0.001147109	0	0.007235611	0	6.34253E-08	4.70089E-07	5.33514E-07	0.533514
397266.283767777.2	397266.28	3767777	0.005106523	0	0.001156194	0.000963495	0.006166368	0	0.001252543	0	0.007900659	0	6.9255E-08	5.13296E-07	5.82551E-07	0.582551
397366.283767777.2	397366.28	3767777	0.003871152	0	0.000876487	0.000730406	0.004674599	0	0.000949528	0	0.00598933	0	5.25008E-08	3.89119E-07	4.4162E-07	0.4416201
397466.283767777.2	397466.28	3767777	0.002168621	0	0.000491008	0.000409174	0.002618712	0	0.000531926	0	0.003355224	0	2.9411E-08	2.17985E-07	2.47396E-07	0.2473957
397566.283767777.2	397566.28	3767777	0.001284159	0	0.000290753	0.000242294	0.001550683	0	0.000314982	0	0.001986812	0	1.74158E-08	1.29081E-07	1.46497E-07	0.1464966
397666.283767777.2	397666.28	3767777	0.00089353	0	0.000202309	0.000168591	0.001078979	0	0.000219168	0	0.001382442	0	1.21181E-08	8.98156E-08	1.01934E-07	0.1019337
397766.283767777.2	397766.28	3767777	0.000670178	0	0.000151738	0.000126449	0.000809272	0	0.000164383	0	0.001036879	0	9.08899E-09	6.73648E-08	7.64538E-08	0.0764538
397866.283767777.2	397866.28	3767777	0.000528794	0	0.000119727	9.97725E-05	0.000638544	0	0.000129704	0	0.000818135	0	7.17154E-09	5.31532E-08	6.03247E-08	0.0603247
396166.283767877.2	396166.28	3767877	0.000880688	0	0.000199401	0.000166168	0.001063472	0	0.000216018	0	0.001362574	0	1.19439E-08	8.85247E-08	1.00469E-07	0.1004687
396266.283767877.2	396266.28	3767877	0.001222108	0	0.000276704	0.000230586	0.001475753	0	0.000299762	0	0.001890808	0	1.65743E-08	1.22843E-07	1.39418E-07	0.1394178
396366.283767877.2	396366.28	3767877	0.001850059	0	0.000418881	0.000349068	0.002234034	0	0.000453788	0	0.002862355	0	2.50906E-08	1.85964E-07	2.11054E-07	0.2110543
396466.283767877.2	396466.28	3767877	0.003167905	0	0.000717262	0.000597718	0.003825395	0	0.000777033	0	0.004901287	0	4.29633E-08	3.18431E-07	3.61394E-07	0.3613939
396566.283767877.2	396566.28	3767877	0.006022593	0	0.001363606	0.001136338	0.007272565	0	0.00147724	0	0.009317974	0	8.16787E-08	6.05377E-07	6.87056E-07	0.687056
397466.283767877.2	397466.28	3767877	0.003905396	0	0.000884241	0.000736867	0.00471595	0	0.000957927	0	0.006042311	0	5.29652E-08	3.92561E-07	4.45527E-07	0.4455267
397566.283767877.2	397566.28	3767877	0.001712383	0	0.000387709	0.000323091	0.002067783	0	0.000420018	0	0.002649347	0	2.32234E-08	1.72125E-07	1.95348E-07	0.1953482
397666.283767877.2	397666.28	3767877	0.00106069	0	0.000240156	0.00020013	0.001280833	0	0.000260169	0	0.001641067	0	1.43851E-08	1.06618E-07	1.21003E-07	0.1210033
397766.283767877.2	397766.28	3767877	0.00075565	0	0.00017109	0.000142575	0.000912483	0	0.000185348	0	0.001169118	0	1.02482E-08	7.59562E-08	8.62043E-08	0.0862043
397866.283767877.2	397866.28	3767877	0.000587509	0	0.000133021	0.000110851	0.000709445	0	0.000144106	0	0.000908977	0	7.96784E-09	5.90551E-08	6.70229E-08	0.0670229
396166.283767977.2	396166.28	3767977	0.000937628	0	0.000212293	0.000176911	0.00113223	0	0.000229984	0	0.001450669	0	1.27162E-08	9.42482E-08	1.06964E-07	0.1069644
396266.283767977.2	396266.28	3767977	0.00136037	0	0.000308008	0.000256674	0.001642711	0	0.000333676	0	0.002104723	0	1.84494E-08	1.36741E-07	1.55191E-07	0.1551907
396366.283767977.2	396366.28	3767977	0.002239078	0	0.000506961	0.000422468	0.002703793	0	0.000549208	0	0.003464235	0	3.03665E-08	2.25067E-07	2.55434E-07	0.2554336
396466.283767977.2	396466.28	3767977	0.005291606	0	0.0011981	0.000998416	0.006389864	0	0.001297941	0	0.008187014	0	7.17651E-08	5.319E-07	6.03665E-07	0.6036652
397466.283767977.2	397466.28	3767977	0.004444572	0	0.001006318	0.000838598	0.00536703	0	0.001090178	0	0.006876508	0	6.02775E-08	4.46758E-07	5.07036E-07	0.5070358
397566.283767977.2	397566.28	3767977	0.002116287	0	0.000479159	0.000399299	0.002555516	0	0.000519089	0	0.003274255	0	2.87012E-08	2.12724E-07	2.41426E-07	0.2414255
397666.283767977.2	397666.28	3767977	0.001249168	0	0.00028283	0.000235692	0.001508429	0	0.0003064	0	0.001932675	0	1.69413E-08	1.25564E-07	1.42505E-07	0.1425048

Garvey Reservoir Rehab - Unmitigated Misc. Site Upgrades			Demolition - 2025	Demolition - 2026	ite Preparation - 202	ite Preparation - 202	Grading - 2025	Grading - 2026	nfrastructure - 2025	nfrastructure - 2026	Paving - 2025	itectural Coating -	Child Risk			
Unique Identifier	X (UTM)	Y (UTM)	2025	1900	2025	2026	2026	1900	2026	1900	2026	1900	3rd Trimester	0<2	Total	per million
397766.283767977.2	397766.28	3767977	0.000877355	0	0.000198646	0.000165539	0.001059447	0	0.0002152	0	0.001357417	0	1.18987E-08	8.81897E-08	1.00088E-07	0.1000884
397866.283767977.2	397866.28	3767977	0.000640805	0	0.000145088	0.000120907	0.000773802	0	0.000157179	0	0.000991434	0	8.69063E-09	6.44122E-08	7.31029E-08	0.0731029
396166.283768077.2	396166.28	3768077	0.000970489	0	0.000219733	0.000183111	0.001171911	0	0.000238044	0	0.001501511	0	1.31618E-08	9.75513E-08	1.10713E-07	0.1107131
396266.283768077.2	396266.28	3768077	0.001430129	0	0.000323803	0.000269836	0.001726948	0	0.000350786	0	0.002212652	0	1.93955E-08	1.43753E-07	1.63149E-07	0.1631487
396366.283768077.2	396366.28	3768077	0.002429532	0	0.000550083	0.000458402	0.002933775	0	0.000595923	0	0.003758899	0	3.29495E-08	2.44211E-07	2.7716E-07	0.2771605
396466.283768077.2	396466.28	3768077	0.005954123	0	0.001348103	0.001123419	0.007189884	0	0.001460445	0	0.009212039	0	8.07502E-08	5.98495E-07	6.79245E-07	0.679245
397466.283768077.2	397466.28	3768077	0.005919145	0	0.001340184	0.00111682	0.007147647	0	0.001451866	0	0.009157923	0	8.02758E-08	5.94979E-07	6.75255E-07	0.6752547
397566.283768077.2	397566.28	3768077	0.002511201	0	0.000568574	0.000473812	0.003032394	0	0.000615955	0	0.003885254	0	3.40571E-08	2.5242E-07	2.86477E-07	0.2864772
397666.283768077.2	397666.28	3768077	0.001465173	0	0.000331737	0.000276448	0.001769265	0	0.000359382	0	0.002266871	0	1.98708E-08	1.47276E-07	1.67147E-07	0.1671466
397766.283768077.2	397766.28	3768077	0.000980142	0	0.000221919	0.000184932	0.001183568	0	0.000240412	0	0.001516446	0	1.32927E-08	9.85216E-08	1.11814E-07	0.1118144
397866.283768077.2	397866.28	3768077	0.000706149	0	0.000159883	0.000133236	0.000852708	0	0.000173206	0	0.001092532	0	9.57683E-09	7.09804E-08	8.05573E-08	0.0805573
396166.283768177.2	396166.28	3768177	0.000954013	0	0.000216003	0.000180002	0.001152015	0	0.000234003	0	0.00147602	0	1.29384E-08	9.58952E-08	1.08834E-07	0.1088336
396266.283768177.2	396266.28	3768177	0.001420449	0	0.000321611	0.000268009	0.00171526	0	0.000348412	0	0.002197676	0	1.92642E-08	1.4278E-07	1.62045E-07	0.1620445
396366.283768177.2	396366.28	3768177	0.002422572	0	0.000548507	0.000457089	0.00292537	0	0.000594216	0	0.00374813	0	3.28551E-08	2.43511E-07	2.76366E-07	0.2763664
396466.283768177.2	396466.28	3768177	0.005535456	0	0.001253311	0.001044426	0.006684325	0	0.001357753	0	0.008564291	0	7.50722E-08	5.56411E-07	6.31484E-07	0.6314836
397466.283768177.2	397466.28	3768177	0.005557119	0	0.001258216	0.001048513	0.006710484	0	0.001363067	0	0.008597807	0	7.5366E-08	5.58589E-07	6.33955E-07	0.6339549
397566.283768177.2	397566.28	3768177	0.002616847	0	0.000592494	0.000493745	0.003159966	0	0.000641868	0	0.004048706	0	3.54898E-08	2.63039E-07	2.98529E-07	0.2985293
397666.283768177.2	397666.28	3768177	0.001548898	0	0.000350694	0.000292245	0.001870368	0	0.000379918	0	0.002396408	0	2.10062E-08	1.55692E-07	1.76698E-07	0.1766979
397766.283768177.2	397766.28	3768177	0.001056362	0	0.000239176	0.000199314	0.001275607	0	0.000259108	0	0.001634372	0	1.43264E-08	1.06183E-07	1.2051E-07	0.1205096
397866.283768177.2	397866.28	3768177	0.000750287	0	0.000169876	0.000141564	0.000906007	0	0.000184033	0	0.001160822	0	1.01754E-08	7.54172E-08	8.55926E-08	0.0855926
396166.283768277.2	396166.28	3768277	0.000896995	0	0.000203093	0.000169244	0.001083164	0	0.000220018	0	0.001387804	0	1.21651E-08	9.01639E-08	1.02329E-07	0.102329
396266.283768277.2	396266.28	3768277	0.001335221	0	0.000302314	0.000251928	0.001612342	0	0.000327507	0	0.002065813	0	1.81083E-08	1.34213E-07	1.52322E-07	0.1523217
396366.283768277.2	396366.28	3768277	0.002204677	0	0.000499172	0.000415977	0.002662251	0	0.00054077	0	0.00341101	0	2.99E-08	2.21609E-07	2.51509E-07	0.251509
396466.283768277.2	396466.28	3768277	0.004663831	0	0.001055962	0.000879968	0.005631796	0	0.001143959	0	0.007215739	0	6.32511E-08	4.68798E-07	5.32049E-07	0.5320488
397366.283768277.2	397366.28	3768277	0.006884508	0	0.001558757	0.001298964	0.008313368	0	0.001688653	0	0.010651503	0	9.33681E-08	6.92015E-07	7.85383E-07	0.7853831
397466.283768277.2	397466.28	3768277	0.004113477	0	0.000931353	0.000776128	0.004967218	0	0.001008966	0	0.006364247	0	5.57872E-08	4.13477E-07	4.69265E-07	0.4692645
397566.283768277.2	397566.28	3768277	0.002467179	0	0.000558606	0.000465505	0.002979235	0	0.000605157	0	0.003817144	0	3.346E-08	2.47995E-07	2.81455E-07	0.2814552
397666.283768277.2	397666.28	3768277	0.001549625	0	0.000350858	0.000292382	0.001871245	0	0.000380097	0	0.002397532	0	2.10161E-08	1.55765E-07	1.76781E-07	0.1767808
397766.283768277.2	397766.28	3768277	0.00106755	0	0.000241709	0.000201425	0.001289117	0	0.000261852	0	0.001651681	0	1.44782E-08	1.07308E-07	1.21786E-07	0.1217859
397866.283768277.2	397866.28	3768277	0.000796663	0	0.000180377	0.000150314	0.000962008	0	0.000195408	0	0.001232573	0	1.08044E-08	8.00787E-08	9.08831E-08	0.0908831
396166.283768377.2	396166.28	3768377	0.000816797	0	0.000184935	0.000154113	0.00098632	0	0.000200346	0	0.001263723	0	1.10774E-08	8.21025E-08	9.318E-08	0.09318
396266.283768377.2	396266.28	3768377	0.001203809	0	0.00027256	0.000227134	0.001453656	0	0.000295274	0	0.001862497	0	1.63261E-08	1.21004E-07	1.3733E-07	0.1373302
396366.283768377.2	396366.28	3768377	0.001881595	0	0.000426022	0.000355018	0.002272115	0	0.000461523	0	0.002911147	0	2.55183E-08	1.89134E-07	2.14652E-07	0.2146519
396466.283768377.2	396466.28	3768377	0.003480629	0	0.000788067	0.000656723	0.004203024	0	0.000853739	0	0.005385125	0	4.72045E-08	3.49865E-07	3.97069E-07	0.3970694
397266.283768377.2	397266.28	3768377	0.005166112	0	0.001169686	0.000974738	0.006238324	0	0.00126716	0	0.007992852	0	7.00631E-08	5.19286E-07	5.89349E-07	0.5893489
397366.283768377.2	397366.28	3768377	0.004078614	0	0.00092346	0.00076955	0.004925119	0	0.001000415	0	0.006310309	0	5.53144E-08	4.09973E-07	4.65287E-07	0.4652874
397466.283768377.2	397466.28	3768377	0.003043301	0	0.000689049	0.000574208	0.003674929	0	0.00074647	0	0.004708503	0	4.12734E-08	3.05906E-07	3.47179E-07	0.3471791
397566.283768377.2	397566.28	3768377	0.002161153	0	0.000489318	0.000407765	0.002609695	0	0.000530094	0	0.003343671	0	2.93097E-08	2.17234E-07	2.46544E-07	0.2465439
397666.283768377.2	397666.28	3768377	0.001517579	0	0.000343603	0.000286336	0.001832548	0	0.000372236	0	0.002347952	0	2.05815E-08	1.52544E-07	1.73125E-07	0.173125
397766.283768377.2	397766.28	3768377	0.001090521	0	0.00024691	0.000205759	0.001316855	0	0.000267486	0	0.001687221	0	1.47897E-08	1.09617E-07	1.24406E-07	0.1244064
397866.283768377.2	397866.28	3768377	0.000832433	0	0.000188475	0.000157063	0.001005202	0	0.000204182	0	0.001287915	0	1.12895E-08	8.36742E-08	9.49637E-08	0.0949637
396166.283768477.2	396166.28	3768477	0.000741695	0	0.000167931	0.000139942	0.000895632	0	0.000181925	0	0.001147528	0	1.00589E-08	7.45535E-08	8.46124E-08	0.0846124
396266.283768477.2	396266.28	3768477	0.001041683	0	0.000235853	0.000196544	0.001257882	0	0.000255507	0	0.001611661	0	1.41274E-08	1.04708E-07	1.18835E-07	0.118835
396366.283768477.2	396366.28	3768477	0.001533558	0	0.000347221	0.000289351	0.001851844	0	0.000376156	0	0.002372675	0	2.07982E-08	1.5415E-07	1.74948E-07	0.174948
396466.283768477.2	396466.28	3768477	0.002521798	0	0.000570973	0.000475811	0.003045191	0	0.000618554	0	0.00390165	0	3.42008E-08	2.53485E-07	2.87686E-07	0.2876862
397166.283768477.2	397166.28	3768477	0.004000509	0	0.000905776	0.000754813	0.004830803	0	0.000981257	0	0.006189466	0	5.42551E-08	4.02122E-07	4.56377E-07	0.4563771
397266.283768477.2	397266.28	3768477	0.00349546	0	0.000791425	0.000659521	0.004220933	0	0.000857377	0	0.005408071	0	4.74056E-08	3.51356E-07	3.98761E-07	0.3987613
397366.283768477.2	397366.28	3768477	0.00293428	0	0.000664365	0.000553638	0.003543281	0	0.000719729	0	0.004539829	0	3.97949E-08	2.94947E-07	3.34742E-07	0.3347419
397466.283768477.2	397466.28	3768477	0.002347817	0	0.000531581	0.000442984	0.0028351	0	0.00057588	0	0.003632471	0	3.18412E-08	2.35997E-07	2.67838E-07	0.2678384
397566.283768477.2	397566.28	3768477	0.00179536	0	0.000406497	0.000338747	0.002167982	0	0.000440371	0	0.002777726	0	2.43488E-08	1.80465E-07	2.04814E-07	0.2048142
397666.283768477.2	397666.28	3768477	0.001355077	0	0.00030681	0.000255675	0.00163632	0	0.000332377	0	0.002096535	0	1.83776E-08	1.36209E-07	1.54587E-07	0.1545869
397766.283768477.2	397766.28	3768477	0.001056454	0	0.000239197	0.000199331	0.001275718	0	0.00025913	0	0.001634514	0	1.43277E-08	1.06192E-07	1.2052E-07	0.12052
397866.283768477.2	397866.28	3768477	0.000815705	0	0.000184688	0.000153907	0.000985002	0	0.000200078	0	0.001262033	0	1.10626E-08	8.19928E-08	9.30554E-08	0.0930554
396166.283768577.2	396166.28	3768577	0.000693289	0	0.000156971	0.000130809	0.000837179	0	0.000170052	0	0.001072635	0	9.40242E-09	6.96878E-08	7.90902E-08	0.0790902
396266.283768577.2	396266.28	3768577	0.000871999	0	0.000197434	0.000164528	0.00105298	0	0.000213887	0	0.00134913	0	1.18261E-08	8.76513E-08	9.94774E-08	0.0994774
396366.283768577.2	396366.28	3768577	0.001215239	0	0.000275148	0.00022929	0.001467459	0	0.000298078	0	0.001880181	0	1.64811E-08	1.22153E-07	1.38634E-07	0.1386342
396466.283768577.2	396466.28	3768577	0.001860554	0	0.000421258	0.000351048	0.002246707	0	0.000456362	0	0.002878593	0	2.52329E-08	1.87019E-07	2.12252E-07	0.2122516
396566.283768577.2	396566.28	3768577	0.002984005	0	0.000675624	0.00056302	0.003603326	0	0.000731926	0	0.004616762	0	4.04692E-08	2.99945E-07	3.40415E-07	0.3404146
396866.283768577.2	396866.28	3768577	0.013624082	0	0.003084698	0.002570582	0.016451722	0	0.003341756	0	0.021078768	0	1.84771E-07	1.36946E-06	1.55423E-06	1.5542322
396966.283768577.2	396966.28	3768577	0.008488691	0	0.001921968	0.00160164	0.010250495	0	0.002082132	0	0.013133446	0	1.15124E-07	8.53264E-07	9.68388E-07	0.9683879
397066.283768577.2	397066.28	3768577	0.004232653	0	0.000958336	0.000798614	0.005111128	0	0.001038198	0	0.006548632	0	5.74035E-08	4.25457E-07	4.8286E-07	0.4828601
397166.283768577.2	397166.28	3768577	0.003125537	0	0.000707669	0.000589724	0.003774233	0	0.000766641	0	0.004835736	0	4.23887E-08	3.14172E-07	3.5656E-07	0.3565605
397266.283768577.2	397266.28	3768577	0.002602856	0	0.000589326	0.000491105	0.003143071	0	0.000638436	0	0.00402706	0	3.53001E-08	2.61633E-07	2.96933E-07	0.2969332
397366.283768577.2	397366.28	3768577	0.002254188	0	0.000510382	0.000425319	0.002722038	0	0.000552914	0	0.003487612	0	3.05714E-08	2.26586E-07	2.57157E-07	0.2571573
397466.283768577.2	397466.28	3768577	0.00186094	0	0.000421345	0.000351121	0.002247173	0	0.000456457	0	0.002879191	0	2.52382E-08	1.87057E-07	2.12296E-07	0.2122956
397566.283768577.2	397566.28	3768577	0.001527713	0	0.000345897	0.000288248	0.001844785	0	0.000374722	0	0.002363631	0	2.07189E-08	1.53562E-07	1.74281E-07	0.1742811
397666.283768577.2	397666.28	3768577	0.001219829	0	0.000276188	0.000230156	0.001473002	0	0.000299203	0	0.001887283	0	1.65434E-08	1.22614E-07	1.39158E-07	0.1391579
397766.283768577.2	397766.28	3768577	0.000961976	0	0.000217806	0.000181505	0.001161632	0	0.000235956	0	0.00148834	0	1.30464E-08	9.66956E-08	1.09742E-07	0.109742
397866.283768577.2	397866.28	3768577	0.000773711	0	0.00017518	0.000145983	0.000934292	0	0.000189778	0	0.001197062	0	1.04931E-08	7.77717E-08	8.82648E-08	0.0882648
396166.283768677.2	396166.28	3768677	0.000615099	0	0.000139268	0.000116056	0.000742761	0	0.000150873	0	0.000951663	0	8.34201E-09	6.18284E-08	7.01704E-08	0.0701704
396266.283768677.2	396266.28	3768677	0.000782674	0	0.000177209	0.000147674	0.000945115	0	0.000191977	0	0.001210929	0	1.06147E-08	7.86726E-08	8.92872E-08	0.0892872

Garvey Reservoir Rehab - Unmitigated Misc. Site Upgrades			Demolition - 2025	Demolition - 2026	ite Preparation - 202	ite Preparation - 202	Grading - 2025	Grading - 2026	nfrastructure - 2025	nfrastructure - 2026	Paving - 2025	itectural Coating - 2	Child Risk			
Unique Identifier	X (UTM)	Y (UTM)	2025	1900	2025	2026	2026	1900	2026	1900	2026	1900	3rd Trimester	0<2	Total	per million
396366.283768677.2	396366.28	3768677	0.001000361	0	0.000226497	0.000188747	0.001207983	0	0.000245372	0	0.001547728	0	1.3567E-08	1.00554E-07	1.14121E-07	0.114121
396466.283768677.2	396466.28	3768677	0.001404701	0	0.000318045	0.000265038	0.001696243	0	0.000344549	0	0.002173311	0	1.90506E-08	1.41197E-07	1.60248E-07	0.160248
396566.283768677.2	396566.28	3768677	0.001986363	0	0.000449743	0.000374785	0.002398627	0	0.000487221	0	0.003073241	0	2.69392E-08	1.99665E-07	2.26604E-07	0.2266038
396666.283768677.2	396666.28	3768677	0.002829638	0	0.000640673	0.000533894	0.003416921	0	0.000694062	0	0.00437793	0	3.83757E-08	2.84429E-07	3.22804E-07	0.3228044
396766.283768677.2	396766.28	3768677	0.003754552	0	0.000850087	0.000708406	0.004533799	0	0.000920928	0	0.00580893	0	5.09194E-08	3.77399E-07	4.28318E-07	0.4283185
396866.283768677.2	396866.28	3768677	0.004458203	0	0.001009405	0.00084117	0.005383491	0	0.001093522	0	0.006897598	0	6.04624E-08	4.48128E-07	5.08591E-07	0.5085908
396966.283768677.2	396966.28	3768677	0.004095843	0	0.000927361	0.000772801	0.004945923	0	0.001004641	0	0.006336964	0	5.55481E-08	4.11705E-07	4.67253E-07	0.4672528
397066.283768677.2	397066.28	3768677	0.00315499	0	0.000714337	0.000595281	0.003809799	0	0.000773865	0	0.004881305	0	4.27882E-08	3.17132E-07	3.59921E-07	0.3599205
397166.283768677.2	397166.28	3768677	0.002469687	0	0.000559175	0.000465979	0.002982264	0	0.000605772	0	0.003821026	0	3.3494E-08	2.48247E-07	2.81741E-07	0.2817414
397366.283768677.2	397366.28	3768677	0.001821606	0	0.000412439	0.000343699	0.002199675	0	0.000446809	0	0.002818334	0	2.47047E-08	1.83104E-07	2.07808E-07	0.2078084
397466.283768677.2	397466.28	3768677	0.001557718	0	0.000352691	0.000293909	0.001881018	0	0.000382082	0	0.002410055	0	2.11259E-08	1.56578E-07	1.77704E-07	0.1777041
397566.283768677.2	397566.28	3768677	0.001308713	0	0.000296312	0.000246927	0.001580333	0	0.000321005	0	0.002024802	0	1.77488E-08	1.31549E-07	1.49298E-07	0.1492977
397666.283768677.2	397666.28	3768677	0.001085007	0	0.000245662	0.000204718	0.001310197	0	0.000266134	0	0.00167869	0	1.47149E-08	1.09062E-07	1.23777E-07	0.1237773
397766.283768677.2	397766.28	3768677	0.000885089	0	0.000200398	0.000166998	0.001068787	0	0.000217097	0	0.001369383	0	1.20036E-08	8.89671E-08	1.00971E-07	0.1009708
397866.283768677.2	397866.28	3768677	0.00072972	0	0.00016522	0.000137683	0.000881171	0	0.000178988	0	0.001129	0	9.8965E-09	7.33498E-08	8.32463E-08	0.0832463
396166.283768777.2	396166.28	3768777	0.000548032	0	0.000124083	0.000103402	0.000661775	0	0.000134423	0	0.000847899	0	7.43245E-09	5.5087E-08	6.25194E-08	0.0625194
396266.283768777.2	396266.28	3768777	0.00067385	0	0.00015257	0.000127142	0.000813706	0	0.000165284	0	0.001042561	0	9.1388E-09	6.77339E-08	7.68727E-08	0.0768727
396366.283768777.2	396366.28	3768777	0.000832861	0	0.000188572	0.000157144	0.001005718	0	0.000204287	0	0.001288577	0	1.12953E-08	8.37172E-08	9.50125E-08	0.0950125
396466.283768777.2	396466.28	3768777	0.001091721	0	0.000247182	0.000205985	0.001318304	0	0.000267781	0	0.001689077	0	1.4806E-08	1.09737E-07	1.24543E-07	0.1245433
396566.283768777.2	396566.28	3768777	0.001423761	0	0.000322361	0.000268634	0.001719259	0	0.000349224	0	0.0022028	0	1.93091E-08	1.43113E-07	1.62422E-07	0.1624223
396666.283768777.2	396666.28	3768777	0.001833898	0	0.000415222	0.000346018	0.002214518	0	0.000449824	0	0.002837352	0	2.48714E-08	1.84339E-07	2.09211E-07	0.2092107
396766.283768777.2	396766.28	3768777	0.002263381	0	0.000512464	0.000427053	0.002733139	0	0.000555169	0	0.003501835	0	3.06961E-08	2.2751E-07	2.58206E-07	0.258206
396866.283768777.2	396866.28	3768777	0.002556958	0	0.000578934	0.000482445	0.003087648	0	0.000627178	0	0.003956049	0	3.46776E-08	2.5702E-07	2.91697E-07	0.2916972
396966.283768777.2	396966.28	3768777	0.002534408	0	0.000573828	0.00047819	0.003060417	0	0.000621647	0	0.00392116	0	3.43718E-08	2.54753E-07	2.89125E-07	0.2891247
397066.283768777.2	397066.28	3768777	0.002262431	0	0.000512249	0.000426874	0.002731993	0	0.000554936	0	0.003500366	0	3.06832E-08	2.27414E-07	2.58098E-07	0.2580977
397166.283768777.2	397166.28	3768777	0.001935135	0	0.000438144	0.00036512	0.002336767	0	0.000474656	0	0.002993983	0	2.62444E-08	1.94515E-07	2.2076E-07	0.2207598
397266.283768777.2	397266.28	3768777	0.001705183	0	0.000386079	0.000321733	0.002059089	0	0.000418252	0	0.002638208	0	2.31258E-08	1.71401E-07	1.94527E-07	0.1945269
397366.283768777.2	397366.28	3768777	0.001492617	0	0.000337951	0.000281626	0.001802406	0	0.000366114	0	0.002309332	0	2.0243E-08	1.50034E-07	1.70277E-07	0.1702774
397466.283768777.2	397466.28	3768777	0.001294399	0	0.000293071	0.000244226	0.001563048	0	0.000317494	0	0.002002655	0	1.75547E-08	1.3011E-07	1.47665E-07	0.1476647
397566.283768777.2	397566.28	3768777	0.001113156	0	0.000252035	0.00021003	0.001344189	0	0.000273038	0	0.001722242	0	1.50967E-08	1.11892E-07	1.26989E-07	0.1269886
397666.283768777.2	397666.28	3768777	0.000948416	0	0.000214736	0.000178947	0.001145258	0	0.00023263	0	0.001467361	0	1.28625E-08	9.53327E-08	1.08195E-07	0.1081951
397766.283768777.2	397766.28	3768777	0.000800862	0	0.000181327	0.000151106	0.000967079	0	0.000196438	0	0.00123907	0	1.08613E-08	8.05008E-08	9.13622E-08	0.0913622
397866.283768777.2	397866.28	3768777	0.000677846	0	0.000153474	0.000127895	0.000818531	0	0.000166264	0	0.001048742	0	9.19298E-09	6.81355E-08	7.73285E-08	0.0773285
396166.283768877.2	396166.28	3768877	0.000485224	0	0.000109862	9.15517E-05	0.000585931	0	0.000119017	0	0.000750724	0	6.58064E-09	4.87736E-08	5.53543E-08	0.0553543
396266.283768877.2	396266.28	3768877	0.000584635	0	0.00013237	0.000110309	0.000705975	0	0.000143401	0	0.00090453	0	7.92886E-09	5.87662E-08	6.66951E-08	0.0666951
396366.283768877.2	396366.28	3768877	0.000709287	0	0.000160593	0.000133828	0.000856497	0	0.000173976	0	0.001097387	0	9.61939E-09	7.12959E-08	8.09153E-08	0.0809153
396466.283768877.2	396466.28	3768877	0.000875276	0	0.000198176	0.000165146	0.001056937	0	0.00021469	0	0.001354201	0	1.18705E-08	8.79808E-08	9.98513E-08	0.0998513
396566.283768877.2	396566.28	3768877	0.001090437	0	0.000246891	0.000205743	0.001316754	0	0.000267466	0	0.001687091	0	1.47886E-08	1.09608E-07	1.24397E-07	0.1243968
396666.283768877.2	396666.28	3768877	0.00132043	0	0.000298965	0.000249138	0.001594481	0	0.000323879	0	0.002042929	0	1.79077E-08	1.32727E-07	1.50634E-07	0.1506344
396766.283768877.2	396766.28	3768877	0.001561791	0	0.000353613	0.000294678	0.001885936	0	0.000383081	0	0.002416356	0	2.11811E-08	1.56988E-07	1.78169E-07	0.1781688
396866.283768877.2	396866.28	3768877	0.00177884	0	0.000402756	0.00033563	0.002148033	0	0.000436319	0	0.002752167	0	2.41247E-08	1.78805E-07	2.0293E-07	0.2029296
396966.283768877.2	396966.28	3768877	0.001810231	0	0.000409864	0.000341553	0.002185939	0	0.000444019	0	0.002800734	0	2.45504E-08	1.8196E-07	2.06511E-07	0.2065107
397066.283768877.2	397066.28	3768877	0.001687355	0	0.000382043	0.000318369	0.002037561	0	0.00041388	0	0.002610625	0	2.2884E-08	1.69609E-07	1.92493E-07	0.1924931
397166.283768877.2	397166.28	3768877	0.001530025	0	0.000346421	0.000288684	0.001847577	0	0.000375289	0	0.002367208	0	2.07503E-08	1.53795E-07	1.74545E-07	0.1745449
397266.283768877.2	397266.28	3768877	0.001386762	0	0.000313984	0.000261653	0.001674581	0	0.000340149	0	0.002145557	0	1.88074E-08	1.39394E-07	1.58202E-07	0.1582015
397366.283768877.2	397366.28	3768877	0.001233921	0	0.000279378	0.000232815	0.001490018	0	0.00030266	0	0.001909086	0	1.67345E-08	1.24031E-07	1.40765E-07	0.1407654
397466.283768877.2	397466.28	3768877	0.001095445	0	0.000248025	0.000206688	0.001322802	0	0.000268694	0	0.00169484	0	1.48565E-08	1.10112E-07	1.24968E-07	0.1249681
397566.283768877.2	397566.28	3768877	0.000963395	0	0.000218127	0.000181773	0.001163344	0	0.000236304	0	0.001490535	0	1.30656E-08	9.68382E-08	1.09904E-07	0.1099038
397666.283768877.2	397666.28	3768877	0.000833261	0	0.000188663	0.000157219	0.001006202	0	0.000204385	0	0.001289196	0	1.13007E-08	8.37575E-08	9.50582E-08	0.0950582
397766.283768877.2	397766.28	3768877	0.00072012	0	0.000163046	0.000135872	0.000869579	0	0.000176633	0	0.001114148	0	9.76631E-09	7.23848E-08	8.21512E-08	0.0821512
397866.283768877.2	397866.28	3768877	0.00062462	0	0.000141423	0.000117853	0.000754259	0	0.000153209	0	0.000966394	0	8.47114E-09	6.27854E-08	7.12565E-08	0.0712565
3964253767739	396425	3767739	0.001541285	0	0.00034897	0.000290809	0.001861175	0	0.000378051	0	0.00238463	0	2.0903E-08	1.54926E-07	1.75829E-07	0.1758295
3964753767739	396475	3767739	0.001790234	0	0.000405336	0.00033778	0.002161792	0	0.000439114	0	0.002769796	0	2.42793E-08	1.7995E-07	2.04229E-07	0.2042295
3965253767739	396525	3767739	0.002037959	0	0.000461425	0.000384521	0.002460932	0	0.000499877	0	0.003153069	0	2.76389E-08	2.04851E-07	2.3249E-07	0.2324899
3965753767739	396575	3767739	0.002395935	0	0.000542476	0.000452063	0.002893205	0	0.000587682	0	0.003706919	0	3.24938E-08	2.40834E-07	2.73328E-07	0.2733277
3966253767739	396625	3767739	0.002638403	0	0.000597374	0.000497812	0.003185997	0	0.000647156	0	0.004082058	0	3.57822E-08	2.65206E-07	3.00988E-07	0.3009885
3966753767739	396675	3767739	0.00294874	0	0.000667639	0.000556366	0.003560742	0	0.000723276	0	0.004562201	0	3.9991E-08	2.96401E-07	3.36392E-07	0.3363916
3967253767739	396725	3767739	0.003376073	0	0.000764394	0.000636995	0.004076768	0	0.000828093	0	0.005223359	0	4.57865E-08	3.39355E-07	3.85142E-07	0.3851417
3967753767739	396775	3767739	0.003392283	0	0.000768064	0.000640053	0.004096342	0	0.000832069	0	0.005248438	0	4.60063E-08	3.40985E-07	3.86991E-07	0.3869909
3968253767739	396825	3767739	0.003577643	0	0.000810032	0.000675027	0.004320173	0	0.000877535	0	0.005535221	0	4.85202E-08	3.59617E-07	4.08137E-07	0.4081367
3968753767739	396875	3767739	0.003691832	0	0.000835886	0.000696572	0.004458061	0	0.000905544	0	0.005711891	0	5.00688E-08	3.71095E-07	4.21163E-07	0.4211633
3969253767739	396925	3767739	0.003647475	0	0.000825843	0.000688203	0.004404498	0	0.000894664	0	0.005643263	0	4.94673E-08	3.66636E-07	4.16103E-07	0.4161031
3969753767739	396975	3767739	0.003527416	0	0.00079866	0.00066555	0.004259522	0	0.000865215	0	0.005457512	0	4.7839E-08	3.54568E-07	4.02407E-07	0.4024069
3970253767739	397025	3767739	0.003362434	0	0.000761306	0.000634422	0.004060298	0	0.000824748	0	0.005202257	0	4.56015E-08	3.37984E-07	3.83586E-07	0.3835857
3970753767739	397075	3767739	0.003252113	0	0.000736327	0.000613606	0.00392708	0	0.000797688	0	0.005031571	0	4.41053E-08	3.26895E-07	3.71E-07	0.3710003
3971253767739	397125	3767739	0.003242522	0	0.000734156	0.000611797	0.003915498	0	0.000795335	0	0.005016732	0	4.39753E-08	3.25931E-07	3.69906E-07	0.3699061
3971753767739	397175	3767739	0.003286031	0	0.000744007	0.000620006	0.003968037	0	0.000806008	0	0.005084048	0	4.45653E-08	3.30304E-07	3.7487E-07	0.3748696
3972253767739	397225	3767739	0.003290243	0	0.000744961	0.000620801	0.003973124	0	0.000807041	0	0.005090565	0	4.46225E-08	3.30728E-07	3.7535E-07	0.3753502
3972753767739	397275	3767739	0.003277985	0	0.000742185	0.000618488	0.003958321	0	0.000804034	0	0.005071599	0	4.44562E-08	3.29496E-07	3.73952E-07	0.3739517
3973253767739	397325	3767739	0.002951834	0	0.00066834	0.00055695	0.003564479	0	0.000724035	0	0.004566989	0	4.00329E-08	2.96712E-07	3.36745E-07	0.3367446
3973753767739	397375	3767739	0.002486056	0	0.000562881	0.000469067	0.00300203	0	0.000609787	0	0.003846351	0	3.3716E-08	2.49893E-07	2.83609E-07	0.2836087

Garvey Reservoir Rehab - Unmitigated Misc. Site Upgrades			Demolition - 2025	Demolition - 2026	Site Preparation - 202	Site Preparation - 202	Grading - 2025	Grading - 2026	Infrastructure - 2025	Infrastructure - 2026	Paving - 2025	Architectural Coating - 2	Child Risk			
Unique Identifier	X (UTM)	Y (UTM)	2025	1900	2025	2026	2026	1900	2026	1900	2026	1900	3rd Trimester	0<2	Total	per million
3974253767739	397425	3767739	0.002030064	0	0.000459637	0.000383031	0.002451398	0	0.00049794	0	0.003140854	0	2.75318E-08	2.04057E-07	2.31589E-07	0.2315892
3974753767739	397475	3767739	0.001671371	0	0.000378424	0.000315353	0.002018259	0	0.000409959	0	0.002585894	0	2.26672E-08	1.68002E-07	1.9067E-07	0.1906696
3975253767739	397525	3767739	0.001346034	0	0.000304762	0.000253969	0.0016254	0	0.000330159	0	0.002082544	0	1.8255E-08	1.353E-07	1.53555E-07	0.1535553
3964253767789	396425	3767789	0.001816439	0	0.000411269	0.000342724	0.002193436	0	0.000445542	0	0.00281034	0	2.46347E-08	1.82584E-07	2.07219E-07	0.207219
3964753767789	396475	3767789	0.002152376	0	0.00048733	0.000406109	0.002599096	0	0.000527941	0	0.003330091	0	2.91906E-08	2.16352E-07	2.45543E-07	0.2455426
3965253767789	396525	3767789	0.002601439	0	0.000589005	0.000490837	0.00314136	0	0.000638089	0	0.004024867	0	3.52809E-08	2.61491E-07	2.96772E-07	0.2967715
3965753767789	396575	3767789	0.003173588	0	0.000718548	0.00059879	0.003832257	0	0.000778427	0	0.004910079	0	4.30404E-08	3.19002E-07	3.62042E-07	0.3620422
3966253767789	396625	3767789	0.004080631	0	0.000923916	0.00076993	0.004927554	0	0.001000909	0	0.006313429	0	5.53417E-08	4.10176E-07	4.65517E-07	0.4655174
3966753767789	396675	3767789	0.005231316	0	0.001184449	0.000987041	0.006317061	0	0.001283153	0	0.008093734	0	7.09474E-08	5.2584E-07	5.96787E-07	0.5967873
3967253767789	396725	3767789	0.00614339	0	0.001390956	0.00115913	0.007418433	0	0.001506869	0	0.009504868	0	8.3317E-08	6.1752E-07	7.00837E-07	0.7008365
3967753767789	396775	3767789	0.006238687	0	0.001412533	0.001177111	0.007533509	0	0.001530244	0	0.009652309	0	8.46094E-08	6.27099E-07	7.11708E-07	0.711708
3968253767789	396825	3767789	0.006539483	0	0.001480638	0.001233865	0.007896734	0	0.001604024	0	0.010117691	0	8.86888E-08	6.57334E-07	7.46023E-07	0.7460227
3968753767789	396875	3767789	0.006566291	0	0.001486707	0.001238923	0.007929106	0	0.0016106	0	0.010159167	0	8.90524E-08	6.60029E-07	7.49081E-07	0.749081
3969253767789	396925	3767789	0.006357587	0	0.001439454	0.001199545	0.007677086	0	0.001559408	0	0.009836266	0	8.6222E-08	6.3905E-07	7.25272E-07	0.7252721
3969753767789	396975	3767789	0.005949795	0	0.001347123	0.001122603	0.007184658	0	0.001459384	0	0.009205343	0	8.06915E-08	5.9806E-07	6.78751E-07	0.6787512
3970253767789	397025	3767789	0.005156157	0	0.001167432	0.00097286	0.006226303	0	0.001264718	0	0.007977451	0	6.99281E-08	5.18285E-07	5.88213E-07	0.5882133
3970753767789	397075	3767789	0.004798021	0	0.001086344	0.000905287	0.005793837	0	0.001176873	0	0.007423353	0	6.5071E-08	4.82286E-07	5.47357E-07	0.5473571
3971253767789	397125	3767789	0.00509669	0	0.001153967	0.00096164	0.006154493	0	0.001250131	0	0.007885444	0	6.91216E-08	5.12308E-07	5.81429E-07	0.5814292
3971753767789	397175	3767789	0.005385414	0	0.001219339	0.001016116	0.006503141	0	0.001320951	0	0.00833215	0	7.30373E-08	5.4133E-07	6.14367E-07	0.6143668
3972253767789	397225	3767789	0.005653812	0	0.001280108	0.001066757	0.006827245	0	0.001386784	0	0.008747407	0	7.66773E-08	5.68308E-07	6.44986E-07	0.6449856
3972753767789	397275	3767789	0.00601498	0	0.001361882	0.001134902	0.007263372	0	0.001475372	0	0.009306196	0	8.15755E-08	6.04612E-07	6.86188E-07	0.6861876
3973253767789	397325	3767789	0.005612503	0	0.001270755	0.001058963	0.006777362	0	0.001376652	0	0.008683495	0	7.61171E-08	5.64156E-07	6.40273E-07	0.640273
3973753767789	397375	3767789	0.004302985	0	0.000974261	0.000811884	0.005196057	0	0.001055449	0	0.006657448	0	5.83573E-08	4.32526E-07	4.90884E-07	0.4908835
3974253767789	397425	3767789	0.003012593	0	0.000682096	0.000568414	0.003637848	0	0.000738938	0	0.004660993	0	4.0857E-08	3.02819E-07	3.43676E-07	0.3436759
3974753767789	397475	3767789	0.002194186	0	0.000496797	0.000413997	0.002649584	0	0.000538197	0	0.003394779	0	2.97577E-08	2.20555E-07	2.50312E-07	0.2503123
3975253767789	397525	3767789	0.001624744	0	0.000367867	0.000306555	0.001961955	0	0.000398522	0	0.002513755	0	2.20349E-08	1.63316E-07	1.8535E-07	0.1853504
3964253767839	396425	3767839	0.002167638	0	0.000490786	0.000408988	0.002617525	0	0.000531685	0	0.003353704	0	2.93976E-08	2.17886E-07	2.47284E-07	0.2472836
3964753767839	396475	3767839	0.002734426	0	0.000619115	0.00051593	0.003301949	0	0.000670708	0	0.004230622	0	3.70844E-08	2.74858E-07	3.11943E-07	0.3119427
3965253767839	396525	3767839	0.003424837	0	0.000775435	0.000646196	0.004135652	0	0.000840054	0	0.005298804	0	4.64478E-08	3.44257E-07	3.90705E-07	0.3907046
3965753767839	396575	3767839	0.004695237	0	0.001063073	0.000885894	0.00566972	0	0.001151662	0	0.007264329	0	6.36771E-08	4.71955E-07	5.35632E-07	0.5356316
3966253767839	396625	3767839	0.008245995	0	0.001867018	0.001555848	0.009957428	0	0.002022603	0	0.012757955	0	1.11833E-07	8.28869E-07	9.40701E-07	0.9407013
3966753767839	396675	3767839	0.013752143	0	0.003113693	0.002594744	0.016606361	0	0.003373167	0	0.0212769	0	1.86507E-07	1.38233E-06	1.56884E-06	1.5688413
3967253767839	396725	3767839	0.011141046	0	0.002522501	0.002102084	0.013453339	0	0.002732709	0	0.01723709	0	1.51096E-07	1.11987E-06	1.27097E-06	1.270968
3967753767839	396775	3767839	0.01647572	0	0.003730352	0.003108626	0.019895209	0	0.004041214	0	0.025490736	0	2.23445E-07	1.6561E-06	1.87955E-06	1.8795463
3968253767839	396825	3767839	0.011359717	0	0.002572011	0.002143343	0.013717395	0	0.002786346	0	0.017575412	0	1.54061E-07	1.14185E-06	1.29591E-06	1.295914
3968753767839	396875	3767839	0.016321561	0	0.003695448	0.00307954	0.019709054	0	0.004003402	0	0.025252226	0	2.21354E-07	1.64061E-06	1.86196E-06	1.8619599
3969253767839	396925	3767839	0.011256205	0	0.002548575	0.002123812	0.013592398	0	0.002760956	0	0.01741526	0	1.52657E-07	1.13145E-06	1.28411E-06	1.2841053
3969753767839	396975	3767839	0.014440829	0	0.003269622	0.002724685	0.017437982	0	0.00354209	0	0.022342415	0	1.95847E-07	1.45156E-06	1.64741E-06	1.6474065
3970253767839	397025	3767839	0.010453767	0	0.002366891	0.001972409	0.012623417	0	0.002564132	0	0.016173753	0	1.41775E-07	1.05079E-06	1.19256E-06	1.1925634
3970753767839	397075	3767839	0.00746439	0	0.001690051	0.001408375	0.009013603	0	0.001830888	0	0.011548679	0	1.01232E-07	7.50303E-07	8.51536E-07	0.8515359
3971253767839	397125	3767839	0.013192752	0	0.002987038	0.002489198	0.01593087	0	0.003235958	0	0.020411428	0	1.78921E-07	1.32611E-06	1.50503E-06	1.5050261
3971753767839	397175	3767839	0.01301674	0	0.002947187	0.002455989	0.015718328	0	0.003192785	0	0.020139108	0	1.76534E-07	1.30841E-06	1.48495E-06	1.4849468
3972253767839	397225	3767839	0.013837121	0	0.003132933	0.002610777	0.016708976	0	0.003394011	0	0.021408375	0	1.8766E-07	1.39088E-06	1.57854E-06	1.5785356
3972753767839	397275	3767839	0.011538572	0	0.002612507	0.002177089	0.01393337	0	0.002830216	0	0.017852131	0	1.56487E-07	1.15983E-06	1.31632E-06	1.3163177
3973253767839	397325	3767839	0.011486717	0	0.002600766	0.002167305	0.013870753	0	0.002817497	0	0.017771902	0	1.55784E-07	1.15462E-06	1.3104E-06	1.3104021
3973753767839	397375	3767839	0.010582817	0	0.00239611	0.001996758	0.012779251	0	0.002595785	0	0.016373415	0	1.43525E-07	1.06376E-06	1.20729E-06	1.2072854
3974753767839	397475	3767839	0.002892959	0	0.00065501	0.000545841	0.003493384	0	0.000709594	0	0.004475899	0	3.92345E-08	2.90794E-07	3.30028E-07	0.3300281
3975253767839	397525	3767839	0.001956158	0	0.000442904	0.000369087	0.002362154	0	0.000479812	0	0.003026509	0	2.65295E-08	1.96629E-07	2.23158E-07	0.2231581
3964253767889	396425	3767889	0.002606844	0	0.000590229	0.000491857	0.003147887	0	0.000639415	0	0.00403323	0	3.53542E-08	2.62034E-07	2.97388E-07	0.2973882
3964753767889	396475	3767889	0.00352376	0	0.000797832	0.00066486	0.004255106	0	0.000864318	0	0.005451855	0	4.77894E-08	3.542E-07	4.0199E-07	0.4019897
3965253767889	396525	3767889	0.0050249	0	0.001137713	0.000948094	0.006067804	0	0.001232523	0	0.007774374	0	6.8148E-08	5.05091E-07	5.73239E-07	0.5732395
3965753767889	396575	3767889	0.007471696	0	0.001691705	0.001409754	0.009022426	0	0.00183268	0	0.011559983	0	1.01332E-07	7.51038E-07	8.52369E-07	0.8523694
3974753767889	397475	3767889	0.003727958	0	0.000844066	0.000703388	0.004501686	0	0.000914405	0	0.005767785	0	5.05588E-08	3.74726E-07	4.25285E-07	0.4252846
3975253767889	397525	3767889	0.002308452	0	0.000522668	0.000435557	0.002787565	0	0.000566224	0	0.003571567	0	3.13074E-08	2.3204E-07	2.63348E-07	0.2633477
3964253767939	396425	3767939	0.003090669	0	0.000699774	0.000583145	0.003732129	0	0.000758089	0	0.00478179	0	4.19158E-08	3.10667E-07	3.52583E-07	0.3525828
3964753767939	396475	3767939	0.004877187	0	0.001104269	0.000920224	0.005889434	0	0.001196291	0	0.007545837	0	6.61447E-08	4.90244E-07	5.56388E-07	0.5563884
3965253767939	396525	3767939	0.011365566	0	0.002573336	0.002144446	0.013724457	0	0.00278778	0	0.01758446	0	1.5414E-07	1.14244E-06	1.29658E-06	1.2965811
3974753767939	397475	3767939	0.003956773	0	0.000895873	0.000746561	0.004777991	0	0.000970529	0	0.0061218	0	5.3662E-08	3.97726E-07	4.51388E-07	0.4513878
3975253767939	397525	3767939	0.002614072	0	0.000591865	0.000493221	0.003156615	0	0.000641188	0	0.004044413	0	3.54522E-08	2.62761E-07	2.98213E-07	0.2982128
3964253767989	396425	3767989	0.003516857	0	0.000796269	0.000663558	0.00424677	0	0.000862625	0	0.005441175	0	4.76958E-08	3.53506E-07	4.01202E-07	0.4012022
3964753767989	396475	3767989	0.006243035	0	0.001413517	0.001177931	0.007538759	0	0.00153131	0	0.009659035	0	8.46684E-08	6.27536E-07	7.12204E-07	0.712204
3974753767989	397475	3767989	0.004207881	0	0.000952728	0.00079394	0.005081215	0	0.001032122	0	0.006510307	0	5.70675E-08	4.22967E-07	4.80034E-07	0.4800341
3975253767989	397525	3767989	0.002854835	0	0.000646378	0.000538648	0.003447348	0	0.000700242	0	0.004416914	0	3.87174E-08	2.86961E-07	3.25679E-07	0.3256789
3964253768039	396425	3768039	0.003733935	0	0.000845419	0.000704516	0.004508902	0	0.000915871	0	0.005777031	0	5.06398E-08	3.75327E-07	4.25966E-07	0.4259664
3964753768039	396475	3768039	0.00680533	0	0.001540829	0.001284024	0.008217756	0	0.001669232	0	0.010529	0	9.22943E-08	6.84056E-07	7.7635E-07	0.7763504
3974753768039	397475	3768039	0.004859808	0	0.001100334	0.000916945	0.005868448	0	0.001192028	0	0.007518949	0	6.5909E-08	4.88497E-07	5.54406E-07	0.5544058
3975253768039	397525	3768039	0.003174178	0	0.000718682	0.000598901	0.003832969	0	0.000778572	0	0.004910992	0	4.30484E-08	3.19061E-07	3.62109E-07	0.3621095
3964253768089	396425	3768089	0.003786956	0	0.000857424	0.00071452	0.004572928	0	0.000928876	0	0.005859064	0	5.13589E-08	3.80656E-07	4.32015E-07	0.4320151
3964753768089	396475	3768089	0.006661353	0	0.001508231	0.001256859	0.008043898	0	0.001633917	0	0.010306245	0	9.03417E-08	6.69584E-07	7.59926E-07	0.7599257
3974753768089	397475	3768089	0.005466578	0	0.001237716	0.00103143	0.006601151	0	0.001340859	0	0.008457725	0	7.4138E-08	5.49488E-07	6.23626E-07	0.623626
3975253768089	397525	3768089	0.003399033	0	0.000769592	0.000641327	0.004104492	0	0.000833725	0	0.005258881	0	4.60979E-08	3.41663E-07	3.87761E-07	0.3877609

Garvey Reservoir Rehab - Unmitigated Misc. Site Upgrades			Demolition - 2025	Demolition - 2026	ite Preparation - 202	ite Preparation - 202	Grading - 2025	Grading - 2026	nfrastructure - 2025	nfrastructure - 2026	Paving - 2025	itectural Coating - 2	Child Risk			
Unique Identifier	X (UTM)	Y (UTM)	2025	1900	2025	2026	2026	1900	2026	1900	2026	1900	3rd Trimester	0<2	Total	per million
3964253768139	396425	3768139	0.003840647	0	0.00086958	0.00072465	0.004637762	0	0.000942045	0	0.005942133	0	5.20871E-08	3.86053E-07	4.3814E-07	0.4381401
3964753768139	396475	3768139	0.006364394	0	0.001440995	0.001200829	0.007685306	0	0.001561078	0	0.009846798	0	8.63143E-08	6.39734E-07	7.26049E-07	0.7260486
3974253768139	397425	3768139	0.009804081	0	0.002219792	0.001849827	0.011838891	0	0.002404775	0	0.015168579	0	1.32964E-07	9.85484E-07	1.11845E-06	1.1184474
3974753768139	397475	3768139	0.005434364	0	0.001230422	0.001025352	0.006562251	0	0.001332957	0	0.008407884	0	7.37012E-08	5.4625E-07	6.19951E-07	0.619951
3975253768139	397525	3768139	0.003493551	0	0.000790993	0.000659161	0.004218628	0	0.000856909	0	0.005405117	0	4.73797E-08	3.51164E-07	3.98544E-07	0.3985436
3964253768189	396425	3768189	0.003739117	0	0.000846592	0.000705494	0.00451516	0	0.000917142	0	0.005785048	0	5.07101E-08	3.75847E-07	4.26558E-07	0.4265576
3964753768189	396475	3768189	0.006092631	0	0.001379464	0.001149553	0.007357139	0	0.001494419	0	0.009426334	0	8.26286E-08	6.12417E-07	6.95046E-07	0.6950459
3973753768189	397375	3768189	0.020473254	0	0.004635454	0.003862878	0.02472242	0	0.005021742	0	0.031675601	0	2.77659E-07	2.05792E-06	2.33558E-06	2.3355842
3974253768189	397425	3768189	0.007720532	0	0.001748045	0.001456704	0.009322907	0	0.001893715	0	0.011944974	0	1.04706E-07	7.7605E-07	8.80757E-07	0.8807566
3974753768189	397475	3768189	0.005029295	0	0.001138708	0.000948924	0.006073111	0	0.001233601	0	0.007781174	0	6.82076E-08	5.05533E-07	5.73741E-07	0.5737408
3975253768189	397525	3768189	0.003442948	0	0.000779535	0.000649613	0.004157522	0	0.000844497	0	0.005326825	0	4.66934E-08	3.46077E-07	3.92771E-07	0.3927707
3964253768239	396425	3768239	0.003529565	0	0.000799147	0.000665956	0.004262116	0	0.000865742	0	0.005460836	0	4.78682E-08	3.54784E-07	4.02652E-07	0.402652
3964753768239	396475	3768239	0.005636606	0	0.001276213	0.001063511	0.006806468	0	0.001382564	0	0.008720787	0	7.6444E-08	5.66579E-07	6.43023E-07	0.6430227
3973753768239	397375	3768239	0.009476231	0	0.002145562	0.001787968	0.011442995	0	0.002324358	0	0.014661338	0	1.28517E-07	9.52529E-07	1.08105E-06	1.0810462
3974253768239	397425	3768239	0.005830677	0	0.001320153	0.001100128	0.007040817	0	0.001430166	0	0.009021047	0	7.9076E-08	5.86086E-07	6.65162E-07	0.6651623
3974753768239	397475	3768239	0.00412949	0	0.000934979	0.000779149	0.004986554	0	0.001012894	0	0.006389022	0	5.60044E-08	4.15087E-07	4.71091E-07	0.4710913
3975253768239	397525	3768239	0.003079368	0	0.000697215	0.000581013	0.003718482	0	0.000755317	0	0.004764305	0	4.17626E-08	3.09531E-07	3.51294E-07	0.3512936
3964253768289	396425	3768289	0.003207566	0	0.000726241	0.000605201	0.003873287	0	0.000786761	0	0.004962649	0	4.35012E-08	3.22417E-07	3.65918E-07	0.3659184
3964753768289	396475	3768289	0.004935549	0	0.001117483	0.000931236	0.005959908	0	0.001210606	0	0.007636133	0	6.69362E-08	4.9611E-07	5.63046E-07	0.5630463
3973253768289	397325	3768289	0.007130551	0	0.001614464	0.001345387	0.008610477	0	0.001749003	0	0.011032173	0	9.67049E-08	7.16747E-07	8.13452E-07	0.8134516
3973753768289	397375	3768289	0.006145308	0	0.00139139	0.001159492	0.007420749	0	0.00150734	0	0.009507835	0	8.3343E-08	6.17712E-07	7.01055E-07	0.7010553
3974253768289	397425	3768289	0.005014565	0	0.001135373	0.000946144	0.006055323	0	0.001229988	0	0.007758383	0	6.80078E-08	5.04053E-07	5.7206E-07	0.5720604
3974753768289	397475	3768289	0.003880779	0	0.000878667	0.000732223	0.004686224	0	0.000951889	0	0.006004225	0	5.26313E-08	3.90087E-07	4.42718E-07	0.4427184
3975253768289	397525	3768289	0.002974681	0	0.000673513	0.000561261	0.003592068	0	0.000729639	0	0.004602337	0	4.03428E-08	2.99008E-07	3.39351E-07	0.339351
3964253768339	396425	3768339	0.002898594	0	0.000656285	0.000546904	0.003500189	0	0.000710976	0	0.004484617	0	3.93109E-08	2.9136E-07	3.30671E-07	0.3306709
3964753768339	396475	3768339	0.004210804	0	0.00095339	0.000794491	0.005084744	0	0.001032839	0	0.006514829	0	5.71072E-08	4.2326E-07	4.80368E-07	0.4803675
3965253768339	396525	3768339	0.007388234	0	0.001672808	0.001394006	0.008921642	0	0.001812208	0	0.011430853	0	1.002E-07	7.42648E-07	8.42848E-07	0.8428481
3972753768339	397275	3768339	0.006161482	0	0.001395053	0.001162544	0.007440281	0	0.001511307	0	0.009532859	0	8.35624E-08	6.19338E-07	7.02901E-07	0.7029005
3973253768339	397325	3768339	0.00538182	0	0.001218525	0.001015438	0.006498801	0	0.001320069	0	0.008326589	0	7.29885E-08	5.40968E-07	6.13957E-07	0.6139568
3973753768339	397375	3768339	0.004687814	0	0.001061392	0.000884493	0.005660756	0	0.001149841	0	0.007252844	0	6.35764E-08	4.71208E-07	5.34785E-07	0.5347847
3974253768339	397425	3768339	0.004018625	0	0.000909877	0.000758231	0.004852679	0	0.0009857	0	0.006217495	0	5.45008E-08	4.03943E-07	4.58444E-07	0.4584438
3974753768339	397475	3768339	0.003335422	0	0.00075519	0.000629325	0.00402768	0	0.000818122	0	0.005160465	0	4.52352E-08	3.35269E-07	3.80504E-07	0.3805042
3975253768339	397525	3768339	0.002727188	0	0.000617477	0.000514564	0.003293208	0	0.000668933	0	0.004219423	0	3.69863E-08	2.74131E-07	3.11117E-07	0.311117
3964253768389	396425	3768389	0.002556338	0	0.000578793	0.000482328	0.003086899	0	0.000627026	0	0.003955089	0	3.46692E-08	2.56957E-07	2.91626E-07	0.2916264
3964753768389	396475	3768389	0.003552354	0	0.000804307	0.000670256	0.004289635	0	0.000871332	0	0.005496095	0	4.81772E-08	3.57075E-07	4.05252E-07	0.4052518
3965253768389	396525	3768389	0.005513217	0	0.001248276	0.00104023	0.00665747	0	0.001352299	0	0.008529884	0	7.47706E-08	5.54176E-07	6.28947E-07	0.6289466
3972253768389	397225	3768389	0.005341236	0	0.001209337	0.00100778	0.006449795	0	0.001310115	0	0.0082638	0	7.24382E-08	5.36889E-07	6.09327E-07	0.609327
3972753768389	397275	3768389	0.004796343	0	0.001085964	0.00090497	0.00579181	0	0.001176461	0	0.007420757	0	6.50483E-08	4.82117E-07	5.47166E-07	0.5471657
3973253768389	397325	3768389	0.004304927	0	0.000974701	0.00081225	0.005198403	0	0.001055926	0	0.006660454	0	5.83837E-08	4.32721E-07	4.91105E-07	0.4911051
3973753768389	397375	3768389	0.003811464	0	0.000862973	0.000719144	0.004602523	0	0.000934887	0	0.005896983	0	5.16913E-08	3.8312E-07	4.34811E-07	0.434811
3974253768389	397425	3768389	0.003328395	0	0.000753599	0.000627999	0.004019194	0	0.000816399	0	0.005149592	0	4.51399E-08	3.34563E-07	3.79703E-07	0.3797025
3974753768389	397475	3768389	0.002858804	0	0.000647276	0.000539397	0.00345214	0	0.000701216	0	0.004423055	0	3.87713E-08	2.8736E-07	3.26132E-07	0.3261317
3975253768389	397525	3768389	0.002417472	0	0.000547352	0.000456127	0.002919211	0	0.000592965	0	0.003740239	0	3.27859E-08	2.42999E-07	2.75785E-07	0.2757846
3964253768439	396425	3768439	0.002264806	0	0.000512786	0.000427322	0.00273486	0	0.000555518	0	0.003504039	0	3.07154E-08	2.27653E-07	2.58368E-07	0.2583685
3964753768439	396475	3768439	0.003005014	0	0.000680381	0.000566984	0.003628696	0	0.000737079	0	0.004649267	0	4.07542E-08	3.02057E-07	3.42811E-07	0.3428113
3965253768439	396525	3768439	0.004265202	0	0.000965706	0.000804755	0.005150433	0	0.001046182	0	0.006598992	0	5.78449E-08	4.28728E-07	4.86573E-07	0.4865733
3971753768439	397175	3768439	0.004551676	0	0.001030568	0.000858807	0.005496364	0	0.001116449	0	0.007042216	0	6.17301E-08	4.57524E-07	5.19254E-07	0.5192542
3972253768439	397225	3768439	0.004295296	0	0.00097252	0.000810433	0.005186773	0	0.001053563	0	0.006645553	0	5.82531E-08	4.31753E-07	4.90006E-07	0.4900064
3972753768439	397275	3768439	0.00391705	0	0.000886879	0.000739066	0.004730022	0	0.000960786	0	0.006060341	0	5.31233E-08	3.93733E-07	4.46856E-07	0.4468562
3973253768439	397325	3768439	0.003595913	0	0.000814169	0.000678474	0.004342235	0	0.000882016	0	0.005563488	0	4.8768E-08	3.61453E-07	4.10221E-07	0.4102209
3973753768439	397375	3768439	0.00325087	0	0.000736046	0.000613372	0.003925578	0	0.000797383	0	0.005029647	0	4.40885E-08	3.2677E-07	3.70858E-07	0.3708585
3974253768439	397425	3768439	0.002893407	0	0.000655111	0.000545926	0.003493926	0	0.000709704	0	0.004476592	0	3.92406E-08	2.90839E-07	3.30079E-07	0.3300792
3974753768439	397475	3768439	0.002509736	0	0.000568242	0.000473535	0.003030624	0	0.000615596	0	0.003882987	0	3.40372E-08	2.52273E-07	2.8631E-07	0.2863101
3975253768439	397525	3768439	0.002168564	0	0.000490996	0.000409163	0.002618644	0	0.000531912	0	0.003355137	0	2.94102E-08	2.17979E-07	2.47389E-07	0.2473893
3964253768489	396425	3768489	0.001977935	0	0.000447834	0.000373195	0.002388449	0	0.000485154	0	0.003060201	0	2.68249E-08	1.98817E-07	2.25642E-07	0.2256423
3964753768489	396475	3768489	0.00254179	0	0.0005755	0.000479583	0.003069331	0	0.000623458	0	0.00393258	0	3.44719E-08	2.55495E-07	2.89967E-07	0.2899668
3965253768489	396525	3768489	0.0034241	0	0.000775268	0.000646057	0.004134763	0	0.000839874	0	0.005297665	0	4.64378E-08	3.44183E-07	3.90621E-07	0.3906206
3970753768489	397075	3768489	0.004971378	0	0.001125595	0.000937996	0.006003173	0	0.001219395	0	0.007691566	0	6.74221E-08	4.99712E-07	5.67134E-07	0.5671337
3971253768489	397125	3768489	0.004222828	0	0.000956112	0.00079676	0.005099263	0	0.001035788	0	0.006533431	0	5.72702E-08	4.24469E-07	4.81739E-07	0.4817392
3971753768489	397175	3768489	0.003798647	0	0.000860071	0.000716726	0.004587045	0	0.000931744	0	0.005877152	0	5.15175E-08	3.81831E-07	4.33349E-07	0.4333488
3972253768489	397225	3768489	0.003536752	0	0.000800774	0.000667312	0.004270794	0	0.000867505	0	0.005471955	0	4.79656E-08	3.55506E-07	4.03472E-07	0.4034718
3972753768489	397275	3768489	0.003319815	0	0.000751656	0.00062638	0.004008833	0	0.000814294	0	0.005136317	0	4.50235E-08	3.337E-07	3.78724E-07	0.3787237
3973253768489	397325	3768489	0.003063075	0	0.000693526	0.000577939	0.003698808	0	0.00075132	0	0.004739097	0	4.15416E-08	3.07893E-07	3.49435E-07	0.3494349
3973753768489	397375	3768489	0.002786429	0	0.00063089	0.000525741	0.003364745	0	0.000683464	0	0.004311079	0	3.77897E-08	2.80086E-07	3.17875E-07	0.3178752
3974253768489	397425	3768489	0.002510414	0	0.000568396	0.000473663	0.003031443	0	0.000615762	0	0.003884037	0	3.40464E-08	2.52341E-07	2.86387E-07	0.2863875
3974753768489	397475	3768489	0.002228891	0	0.000504655	0.000420546	0.002691491	0	0.000546709	0	0.003448473	0	3.02283E-08	2.24043E-07	2.54271E-07	0.2542714
3975253768489	397525	3768489	0.001971908	0	0.00044647	0.000372058	0.002381172	0	0.000483676	0	0.003050877	0	2.67431E-08	1.98212E-07	2.24955E-07	0.2249549
3964253768539	396425	3768539	0.001732122	0	0.000392178	0.000326815	0.002091619	0	0.00042486	0	0.002679886	0	2.34911E-08	1.74109E-07	1.976E-07	0.1976
3964753768539	396475	3768539	0.002172422	0	0.000491869	0.000409891	0.002623301	0	0.000532858	0	0.003361105	0	2.94625E-08	2.18367E-07	2.47829E-07	0.2478294
3965253768539	396525	3768539	0.002796734	0	0.000633223	0.000527686	0.003377188	0	0.000685991	0	0.004327022	0	3.79295E-08	2.81121E-07	3.19051E-07	0.3190508
3965753768539	396575	3768539	0.003782915	0	0.000856509	0.000713757	0.004568048	0	0.000927885	0	0.005852811	0	5.13041E-08	3.8025E-07	4.31554E-07	0.431554

Garvey Reservoir Rehab - Unmitigated Misc. Site Upgrades			Demolition - 2025	Demolition - 2026	Site Preparation - 2025	Site Preparation - 202	Grading - 2025	Grading - 2026	Infrastructure - 2025	Infrastructure - 2026	Paving - 2025	Architectural Coating - 2	Child Risk			
Unique Identifier	X (UTM)	Y (UTM)	2025	1900	2025	2026	1900	2026	1900	2026	1900	3rd Trimester	0<2	Total	per million
3970253768539	397025	3768539	0.005903676	0	0.001336681	0.001113901	0.007128967	0	0.001448071	0	0.009133989	0	8.0066E-08	5.93424E-07	6.7349E-07	0.67349
3970753768539	397075	3768539	0.004434649	0	0.001004072	0.000836726	0.005355048	0	0.001087744	0	0.006861156	0	6.0143E-08	4.45761E-07	5.05904E-07	0.5059038
3971253768539	397125	3768539	0.003720598	0	0.0008424	0.000702	0.004492798	0	0.0009126	0	0.005756397	0	5.0459E-08	3.73986E-07	4.24445E-07	0.424445
3971753768539	397175	3768539	0.003328016	0	0.000753513	0.000627928	0.004018737	0	0.000816306	0	0.005149007	0	4.51347E-08	3.34525E-07	3.79659E-07	0.3796594
3972253768539	397225	3768539	0.003051494	0	0.000690904	0.000575754	0.003684823	0	0.00074848	0	0.00472118	0	4.13845E-08	3.06729E-07	3.48114E-07	0.3481138
3972753768539	397275	3768539	0.002887587	0	0.000653793	0.000544828	0.003486897	0	0.000708276	0	0.004467587	0	3.91616E-08	2.90254E-07	3.29415E-07	0.3294152
3973253768539	397325	3768539	0.002659815	0	0.000602222	0.000501852	0.003211853	0	0.000652408	0	0.004115186	0	3.60726E-08	2.67359E-07	3.03431E-07	0.3034311
3973753768539	397375	3768539	0.002435643	0	0.000551466	0.000459555	0.002941154	0	0.000597422	0	0.003768353	0	3.30323E-08	2.44825E-07	2.77858E-07	0.2778576
3974253768539	397425	3768539	0.002209032	0	0.000500158	0.000416798	0.00266751	0	0.000541838	0	0.003417748	0	2.9959E-08	2.22047E-07	2.52006E-07	0.2520059
3974753768539	397475	3768539	0.001986153	0	0.000449695	0.000374746	0.002398373	0	0.00048717	0	0.003072916	0	2.69363E-08	1.99644E-07	2.2658E-07	0.2265799
3975253768539	397525	3768539	0.00177571	0	0.000402047	0.00033504	0.002144253	0	0.000435551	0	0.002747324	0	2.40823E-08	1.7849E-07	2.02573E-07	0.2025725
3964253768589	396425	3768589	0.001517838	0	0.000343662	0.000286385	0.001832861	0	0.0003723	0	0.002348354	0	2.0585E-08	1.5257E-07	1.73155E-07	0.1731547
3964753768589	396475	3768589	0.001863731	0	0.000421977	0.000351647	0.002250543	0	0.000457142	0	0.002883508	0	2.5276E-08	1.87338E-07	2.12614E-07	0.212614
3965253768589	396525	3768589	0.002325765	0	0.000526588	0.000438824	0.002808471	0	0.000570471	0	0.003598353	0	3.15422E-08	2.33781E-07	2.65323E-07	0.2653227
3965753768589	396575	3768589	0.002953307	0	0.000668673	0.000557228	0.003566257	0	0.000724396	0	0.004569267	0	4.00529E-08	2.9686E-07	3.36913E-07	0.3369126
3966253768589	396625	3768589	0.003809453	0	0.000862518	0.000718765	0.004600094	0	0.000934394	0	0.005893871	0	5.1664E-08	3.82918E-07	4.34582E-07	0.4345816
3968253768589	396825	3768589	0.00983718	0	0.002227286	0.001856072	0.011878858	0	0.002412893	0	0.015219787	0	1.33412E-07	9.88811E-07	1.12222E-06	1.1222232
3968753768589	396875	3768589	0.011338743	0	0.002567262	0.002139385	0.013692067	0	0.002781201	0	0.01754296	0	1.53777E-07	1.13974E-06	1.29352E-06	1.2935212
3969253768589	396925	3768589	0.009585666	0	0.002170339	0.001808616	0.011575143	0	0.002351201	0	0.014830652	0	1.30001E-07	9.63529E-07	1.09353E-06	1.0935306
3969753768589	396975	3768589	0.007224115	0	0.001635649	0.001363041	0.008723459	0	0.001771953	0	0.011176932	0	9.79739E-08	7.26152E-07	8.24125E-07	0.8241254
3970253768589	397025	3768589	0.00517276	0	0.001171191	0.000975992	0.006246352	0	0.00126879	0	0.008003138	0	7.01533E-08	5.19954E-07	5.90107E-07	0.5901073
3970753768589	397075	3768589	0.003968202	0	0.000898461	0.000748717	0.004791791	0	0.000973333	0	0.006139483	0	5.3817E-08	3.98875E-07	4.52692E-07	0.4526916
3971253768589	397125	3768589	0.003377325	0	0.000764677	0.000637231	0.004078279	0	0.0008284	0	0.005225295	0	4.58035E-08	3.39481E-07	3.85284E-07	0.3852845
3971753768589	397175	3768589	0.002989709	0	0.000676915	0.000564096	0.003610215	0	0.000733325	0	0.004625588	0	4.05466E-08	3.00519E-07	3.41065E-07	0.3410653
3972253768589	397225	3768589	0.002707262	0	0.000612965	0.000510804	0.003269147	0	0.000664045	0	0.004188595	0	3.6716E-08	2.72128E-07	3.08844E-07	0.3088439
3972753768589	397275	3768589	0.002494488	0	0.00056479	0.000470658	0.003012212	0	0.000611856	0	0.003859397	0	3.38304E-08	2.5074E-07	2.84571E-07	0.2845707
3973253768589	397325	3768589	0.00235204	0	0.000532537	0.000443781	0.0028402	0	0.000576916	0	0.003639006	0	3.18985E-08	2.36422E-07	2.6832E-07	0.2683202
3973753768589	397375	3768589	0.002162909	0	0.000489715	0.000408096	0.002611815	0	0.000530525	0	0.003346388	0	2.93335E-08	2.17411E-07	2.46744E-07	0.2467442
3974253768589	397425	3768589	0.001969188	0	0.000445854	0.000371545	0.002377888	0	0.000483008	0	0.003046669	0	2.67062E-08	1.97938E-07	2.24645E-07	0.2246445
3974753768589	397475	3768589	0.001785073	0	0.000404168	0.000336806	0.00215556	0	0.000437848	0	0.002761812	0	2.42093E-08	1.79431E-07	2.03641E-07	0.2036408
3975253768589	397525	3768589	0.001613541	0	0.00036533	0.000304442	0.001948427	0	0.000395774	0	0.002496422	0	2.18829E-08	1.62189E-07	1.84072E-07	0.1840724
3964253768639	396425	3768639	0.001327512	0	0.000300569	0.000250474	0.001603033	0	0.000325616	0	0.002053887	0	1.80038E-08	1.33438E-07	1.51442E-07	0.1514423
3964753768639	396475	3768639	0.001608799	0	0.000364256	0.000303547	0.001942701	0	0.000394611	0	0.002489086	0	2.18186E-08	1.61713E-07	1.83531E-07	0.1835315
3965253768639	396525	3768639	0.001936433	0	0.000438438	0.000365365	0.002338334	0	0.000474974	0	0.002995991	0	2.6262E-08	1.94646E-07	2.20908E-07	0.2209078
3965753768639	396575	3768639	0.002372456	0	0.00053716	0.000447633	0.002864853	0	0.000581923	0	0.003670593	0	3.21754E-08	2.38474E-07	2.70649E-07	0.2706493
3966253768639	396625	3768639	0.002921133	0	0.000661389	0.000551157	0.003527406	0	0.000716504	0	0.004519489	0	3.96166E-08	2.93626E-07	3.33242E-07	0.3332422
3966753768639	396675	3768639	0.003577344	0	0.000809965	0.000674971	0.004319811	0	0.000877462	0	0.005534758	0	4.85161E-08	3.59586E-07	4.08103E-07	0.4081026
3967253768639	396725	3768639	0.004306921	0	0.000975152	0.000812627	0.00520081	0	0.001056415	0	0.006663538	0	5.84107E-08	4.32922E-07	4.91333E-07	0.4913326
3967753768639	396775	3768639	0.005075529	0	0.001149176	0.000957647	0.006128941	0	0.001244941	0	0.007852705	0	6.88346E-08	5.10181E-07	5.79015E-07	0.5790152
3968253768639	396825	3768639	0.005838791	0	0.001321991	0.001101659	0.007050616	0	0.001432156	0	0.009033602	0	7.9186E-08	5.86902E-07	6.66088E-07	0.666088
3968753768639	396875	3768639	0.006229638	0	0.001410484	0.001175403	0.007522582	0	0.001528024	0	0.009638308	0	8.44867E-08	6.26189E-07	7.10676E-07	0.7106757
3969253768639	396925	3768639	0.005902521	0	0.00133642	0.001113683	0.007127572	0	0.001447788	0	0.009132202	0	8.00503E-08	5.93308E-07	6.73358E-07	0.6733582
3969753768639	396975	3768639	0.0051381	0	0.001163343	0.000969453	0.006204498	0	0.001260289	0	0.007949514	0	6.96832E-08	5.1647E-07	5.86153E-07	0.5861533
3970253768639	397025	3768639	0.004204401	0	0.00095194	0.000793283	0.005077013	0	0.001031268	0	0.006504923	0	5.70203E-08	4.22617E-07	4.79637E-07	0.4796371
3970753768639	397075	3768639	0.003442006	0	0.000779322	0.000649435	0.004156384	0	0.000844266	0	0.005325367	0	4.66807E-08	3.45983E-07	3.92663E-07	0.3926632
3971253768639	397125	3768639	0.00290494	0	0.000657722	0.000548102	0.003507852	0	0.000712532	0	0.004494435	0	3.9397E-08	2.91998E-07	3.31395E-07	0.3313949
3971753768639	397175	3768639	0.002658067	0	0.000601826	0.000501522	0.003209741	0	0.000651979	0	0.004112481	0	3.60489E-08	2.67183E-07	3.03232E-07	0.3032317
3972253768639	397225	3768639	0.002425498	0	0.000549169	0.000457641	0.002928903	0	0.000594933	0	0.003752657	0	3.28947E-08	2.43806E-07	2.767E-07	0.2767003
3972753768639	397275	3768639	0.002247815	0	0.000508939	0.000424116	0.002714343	0	0.000551351	0	0.003477752	0	3.0485E-08	2.25945E-07	2.5643E-07	0.2564303
3973253768639	397325	3768639	0.002101147	0	0.000475731	0.000396443	0.002537234	0	0.000515376	0	0.003250831	0	2.84959E-08	2.11202E-07	2.39698E-07	0.2396983
3973753768639	397375	3768639	0.001940044	0	0.000439255	0.000366046	0.002342694	0	0.00047586	0	0.003001577	0	2.6311E-08	1.95009E-07	2.2132E-07	0.2213197
3974253768639	397425	3768639	0.0017914	0	0.0004056	0.000338	0.0021632	0	0.0004394	0	0.0027716	0	2.42951E-08	1.80067E-07	2.04362E-07	0.2043625
3974753768639	397475	3768639	0.001620117	0	0.000366819	0.000305682	0.001956367	0	0.000397387	0	0.002506596	0	2.19721E-08	1.6285E-07	1.84823E-07	0.1848226
3975253768639	397525	3768639	0.001478007	0	0.000334643	0.000278869	0.001784764	0	0.00036253	0	0.002286728	0	2.00448E-08	1.48566E-07	1.68611E-07	0.1686107
3964253768689	396425	3768689	0.001170711	0	0.000265067	0.000220889	0.001413689	0	0.000287156	0	0.001811289	0	1.58773E-08	1.17677E-07	1.33554E-07	0.1335545
3964753768689	396475	3768689	0.001400701	0	0.00031714	0.000264283	0.001691413	0	0.000343568	0	0.002167123	0	1.89964E-08	1.40795E-07	1.59792E-07	0.1597917
3965253768689	396525	3768689	0.001652794	0	0.000374218	0.000311848	0.001995827	0	0.000405402	0	0.002557153	0	2.24153E-08	1.66135E-07	1.8855E-07	0.1885504
3965753768689	396575	3768689	0.001964015	0	0.000444683	0.000370569	0.00237164	0	0.000481739	0	0.003038664	0	2.66361E-08	1.97418E-07	2.24054E-07	0.2240543
3966253768689	396625	3768689	0.002329142	0	0.000527353	0.000439461	0.002812548	0	0.000571299	0	0.003603577	0	3.15879E-08	2.3412E-07	2.65708E-07	0.2657079
3966753768689	396675	3768689	0.00274928	0	0.000622479	0.000518732	0.003319886	0	0.000674352	0	0.004253603	0	3.72859E-08	2.76351E-07	3.13637E-07	0.3136373
3967253768689	396725	3768689	0.003166033	0	0.000716838	0.000597365	0.003823134	0	0.000776574	0	0.004898391	0	4.29379E-08	3.18242E-07	3.6118E-07	0.3611804
3967753768689	396775	3768689	0.00357835	0	0.000810192	0.00067516	0.004321026	0	0.000877708	0	0.005536314	0	4.85298E-08	3.59688E-07	4.08217E-07	0.4082173
3968253768689	396825	3768689	0.003930537	0	0.000889933	0.000741611	0.004746308	0	0.000964094	0	0.006081208	0	5.33062E-08	3.95089E-07	4.48395E-07	0.4483947
3968753768689	396875	3768689	0.004153036	0	0.00094031	0.000783592	0.005014987	0	0.001018669	0	0.006425452	0	5.63237E-08	4.17454E-07	4.73777E-07	0.4737774
3969253768689	396925	3768689	0.004082638	0	0.000924371	0.000770309	0.004929979	0	0.001001402	0	0.006316535	0	5.5369E-08	4.10377E-07	4.65746E-07	0.4657465
3969753768689	396975	3768689	0.003774208	0	0.000854538	0.000712115	0.004557535	0	0.000925749	0	0.005839341	0	5.1186E-08	3.79375E-07	4.30561E-07	0.4305608
3970253768689	397025	3768689	0.003362035	0	0.000761215	0.000634346	0.004059816	0	0.00082465	0	0.005201639	0	4.55961E-08	3.37944E-07	3.8354E-07	0.3835402
3970753768689	397075	3768689	0.002973052	0	0.000673144	0.000560953	0.0035901	0	0.000729239	0	0.004599816	0	4.03207E-08	2.98844E-07	3.39165E-07	0.3391651
3971253768689	397125	3768689	0.002564849	0	0.00058072	0.000483934	0.003097176	0	0.000629114	0	0.003968256	0	3.47846E-08	2.57813E-07	2.92597E-07	0.2925973
3971753768689	397175	3768689	0.00236456	0	0.000535372	0.000446143	0.002855318	0	0.000579986	0	0.003658376	0	3.20683E-08	2.3768E-07	2.69748E-07	0.2697485
3972253768689	397225	3768689	0.002188805	0	0.000495579	0.000412982	0.002643085	0	0.000536877	0	0.003386453	0	2.96847E-08	2.20014E-07	2.49698E-07	0.2496984

Garvey Reservoir Rehab - Unmitigated Misc. Site Upgrades			Demolition - 2025	Demolition - 2026	Site Preparation - 2025	Site Preparation - 202	Grading - 2025	Grading - 2026	Infrastructure - 2025	Infrastructure - 2026	Paving - 2025	Architectural Coating - 2	Child Risk			
Unique Identifier	X (UTM)	Y (UTM)	2025	1900	2025	2026	2026	1900	2026	1900	2026	1900	3rd Trimester	0<2	Total	per million
3972753768689	397275	3768689	0.002026432	0	0.000458815	0.000382346	0.002447012	0	0.000497049	0	0.003135234	0	2.74826E-08	2.03692E-07	2.31175E-07	0.2311749
3973253768689	397325	3768689	0.001889493	0	0.00042781	0.000356508	0.002281652	0	0.000463461	0	0.002923367	0	2.56254E-08	1.89928E-07	2.15553E-07	0.215553
3973753768689	397375	3768689	0.001759852	0	0.000398457	0.000332048	0.002125105	0	0.000431662	0	0.002722791	0	2.38672E-08	1.76896E-07	2.00764E-07	0.2007636
3974253768689	397425	3768689	0.001630369	0	0.00036914	0.000307617	0.001968747	0	0.000399902	0	0.002522457	0	2.21112E-08	1.63881E-07	1.85992E-07	0.1859921
3974753768689	397475	3768689	0.001504794	0	0.000340708	0.000283923	0.00181711	0	0.000369101	0	0.002328172	0	2.04081E-08	1.51258E-07	1.71667E-07	0.1716666
3975253768689	397525	3768689	0.001382528	0	0.000313025	0.000260854	0.001669467	0	0.000339111	0	0.002139005	0	1.87499E-08	1.38969E-07	1.57718E-07	0.1577185

Garvey Reservoir Rehab - Unmitigated Misc. Site Upgrades

Offroad DPM Emissions, Ground Level Concentrations and Health Risk Calculations

Residential Receptors

Phase	Year	Emissions (lbs/day)	Meters	lbs/meter	meters (h1)	lbs/day (H1)	g/s (H1)	meters (h2)	lbs/day (H2)	g/s (H2)	hrs/day
Demolition - 2025	2025		1932.1	0	691.2	0	0	1240.9	0	0	10.00
Demolition - 2026	1900		1932.1	0	691.2	0	0	1240.9	0	0	10.00
Site Preparation - 2025	2025		1932.1	0	691.2	0	0	1240.9	0	0	10.00
Site Preparation - 2026	2026		1932.1	0	691.2	0	0	1240.9	0	0	10.00
Grading - 2025	2026		1932.1	0	691.2	0	0	1240.9	0	0	10.00
Grading - 2026	1900		1932.1	0	691.2	0	0	1240.9	0	0	10.00
Infrastructure - 2025	2026		1932.1	0	691.2	0	0	1240.9	0	0	10.00
Infrastructure - 2026	1900		1932.1	0	691.2	0	0	1240.9	0	0	10.00
Paving - 2025	2026		1932.1	0	691.2	0	0	1240.9	0	0	10.00
Architectural Coating - 2026	1900		1932.1	0	691.2	0	0	1240.9	0	0	10.00

		AERMOD Column Identifier:	*5*	*5*	*5*	*5*	*5*	*5*	*5*	*5*	*5*	*5*				
			6	*6*	*6*	*6*	*6*	*6*	*6*	*6*	*6*	*6*			*MAX:*	0
Garvey Reservoir Rehab - Unmitigated Misc. Site Upgrades			Demolition - 2025	Demolition - 2026	Site Preparation - 2025	te Preparation - 202	Grading - 2025	Grading - 2026	Infrastructure - 2025	nfrastructure - 2026	Paving - 2025	rchitectural Coating - 202	Child Risk			
Unique Identifier	X (UTM)	Y (UTM)	2025	1900	2025	2026	2026	1900	2026	1900	2026	1900	3rd Trimester	0<2	Total	per million
396166.283767377.2	396166.28	3767377	0	0	0	0	0	0	0	0	0	0	0	0	0	0
396266.283767377.2	396266.28	3767377	0	0	0	0	0	0	0	0	0	0	0	0	0	0
396366.283767377.2	396366.28	3767377	0	0	0	0	0	0	0	0	0	0	0	0	0	0
396466.283767377.2	396466.28	3767377	0	0	0	0	0	0	0	0	0	0	0	0	0	0
396566.283767377.2	396566.28	3767377	0	0	0	0	0	0	0	0	0	0	0	0	0	0
396666.283767377.2	396666.28	3767377	0	0	0	0	0	0	0	0	0	0	0	0	0	0
396766.283767377.2	396766.28	3767377	0	0	0	0	0	0	0	0	0	0	0	0	0	0
396866.283767377.2	396866.28	3767377	0	0	0	0	0	0	0	0	0	0	0	0	0	0
396966.283767377.2	396966.28	3767377	0	0	0	0	0	0	0	0	0	0	0	0	0	0
397066.283767377.2	397066.28	3767377	0	0	0	0	0	0	0	0	0	0	0	0	0	0
397166.283767377.2	397166.28	3767377	0	0	0	0	0	0	0	0	0	0	0	0	0	0
397266.283767377.2	397266.28	3767377	0	0	0	0	0	0	0	0	0	0	0	0	0	0
397366.283767377.2	397366.28	3767377	0	0	0	0	0	0	0	0	0	0	0	0	0	0
397466.283767377.2	397466.28	3767377	0	0	0	0	0	0	0	0	0	0	0	0	0	0
397566.283767377.2	397566.28	3767377	0	0	0	0	0	0	0	0	0	0	0	0	0	0
397666.283767377.2	397666.28	3767377	0	0	0	0	0	0	0	0	0	0	0	0	0	0
397766.283767377.2	397766.28	3767377	0	0	0	0	0	0	0	0	0	0	0	0	0	0
397866.283767377.2	397866.28	3767377	0	0	0	0	0	0	0	0	0	0	0	0	0	0
396166.283767477.2	396166.28	3767477	0	0	0	0	0	0	0	0	0	0	0	0	0	0
396266.283767477.2	396266.28	3767477	0	0	0	0	0	0	0	0	0	0	0	0	0	0
396366.283767477.2	396366.28	3767477	0	0	0	0	0	0	0	0	0	0	0	0	0	0
396466.283767477.2	396466.28	3767477	0	0	0	0	0	0	0	0	0	0	0	0	0	0
396566.283767477.2	396566.28	3767477	0	0	0	0	0	0	0	0	0	0	0	0	0	0
396666.283767477.2	396666.28	3767477	0	0	0	0	0	0	0	0	0	0	0	0	0	0
396766.283767477.2	396766.28	3767477	0	0	0	0	0	0	0	0	0	0	0	0	0	0
396866.283767477.2	396866.28	3767477	0	0	0	0	0	0	0	0	0	0	0	0	0	0
396966.283767477.2	396966.28	3767477	0	0	0	0	0	0	0	0	0	0	0	0	0	0
397066.283767477.2	397066.28	3767477	0	0	0	0	0	0	0	0	0	0	0	0	0	0
397166.283767477.2	397166.28	3767477	0	0	0	0	0	0	0	0	0	0	0	0	0	0
397266.283767477.2	397266.28	3767477	0	0	0	0	0	0	0	0	0	0	0	0	0	0
397366.283767477.2	397366.28	3767477	0	0	0	0	0	0	0	0	0	0	0	0	0	0
397466.283767477.2	397466.28	3767477	0	0	0	0	0	0	0	0	0	0	0	0	0	0
397566.283767477.2	397566.28	3767477	0	0	0	0	0	0	0	0	0	0	0	0	0	0
397666.283767477.2	397666.28	3767477	0	0	0	0	0	0	0	0	0	0	0	0	0	0
397766.283767477.2	397766.28	3767477	0	0	0	0	0	0	0	0	0	0	0	0	0	0
397866.283767477.2	397866.28	3767477	0	0	0	0	0	0	0	0	0	0	0	0	0	0
396166.283767577.2	396166.28	3767577	0	0	0	0	0	0	0	0	0	0	0	0	0	0
396266.283767577.2	396266.28	3767577	0	0	0	0	0	0	0	0	0	0	0	0	0	0
396366.283767577.2	396366.28	3767577	0	0	0	0	0	0	0	0	0	0	0	0	0	0
396466.283767577.2	396466.28	3767577	0	0	0	0	0	0	0	0	0	0	0	0	0	0
396566.283767577.2	396566.28	3767577	0	0	0	0	0	0	0	0	0	0	0	0	0	0
396666.283767577.2	396666.28	3767577	0	0	0	0	0	0	0	0	0	0	0	0	0	0
396766.283767577.2	396766.28	3767577	0	0	0	0	0	0	0	0	0	0	0	0	0	0
396866.283767577.2	396866.28	3767577	0	0	0	0	0	0	0	0	0	0	0	0	0	0

Garvey Reservoir Rehab - Unmitigated Misc. Site Upgrades			Demolition - 2025	Demolition - 2026	Site Preparation - 2025	ite Preparation - 202	Grading - 2025	Grading - 2026	Infrastructure - 2025	nfrastructure - 2026	Paving - 2025	rchitectural Coating - 202	Child Risk			
Unique Identifier	X (UTM)	Y (UTM)	2025	1900	2025	2026	2026	1900	2026	1900	2026	1900	3rd Trimester	0<2	Total	per million
396966.283767577.2	396966.28	3767577	0	0	0	0	0	0	0	0	0	0	0	0	0	0
397066.283767577.2	397066.28	3767577	0	0	0	0	0	0	0	0	0	0	0	0	0	0
397166.283767577.2	397166.28	3767577	0	0	0	0	0	0	0	0	0	0	0	0	0	0
397266.283767577.2	397266.28	3767577	0	0	0	0	0	0	0	0	0	0	0	0	0	0
397366.283767577.2	397366.28	3767577	0	0	0	0	0	0	0	0	0	0	0	0	0	0
397466.283767577.2	397466.28	3767577	0	0	0	0	0	0	0	0	0	0	0	0	0	0
397566.283767577.2	397566.28	3767577	0	0	0	0	0	0	0	0	0	0	0	0	0	0
397666.283767577.2	397666.28	3767577	0	0	0	0	0	0	0	0	0	0	0	0	0	0
397766.283767577.2	397766.28	3767577	0	0	0	0	0	0	0	0	0	0	0	0	0	0
397866.283767577.2	397866.28	3767577	0	0	0	0	0	0	0	0	0	0	0	0	0	0
396166.283767677.2	396166.28	3767677	0	0	0	0	0	0	0	0	0	0	0	0	0	0
396266.283767677.2	396266.28	3767677	0	0	0	0	0	0	0	0	0	0	0	0	0	0
396366.283767677.2	396366.28	3767677	0	0	0	0	0	0	0	0	0	0	0	0	0	0
396466.283767677.2	396466.28	3767677	0	0	0	0	0	0	0	0	0	0	0	0	0	0
396566.283767677.2	396566.28	3767677	0	0	0	0	0	0	0	0	0	0	0	0	0	0
396666.283767677.2	396666.28	3767677	0	0	0	0	0	0	0	0	0	0	0	0	0	0
396766.283767677.2	396766.28	3767677	0	0	0	0	0	0	0	0	0	0	0	0	0	0
396866.283767677.2	396866.28	3767677	0	0	0	0	0	0	0	0	0	0	0	0	0	0
396966.283767677.2	396966.28	3767677	0	0	0	0	0	0	0	0	0	0	0	0	0	0
397066.283767677.2	397066.28	3767677	0	0	0	0	0	0	0	0	0	0	0	0	0	0
397166.283767677.2	397166.28	3767677	0	0	0	0	0	0	0	0	0	0	0	0	0	0
397266.283767677.2	397266.28	3767677	0	0	0	0	0	0	0	0	0	0	0	0	0	0
397366.283767677.2	397366.28	3767677	0	0	0	0	0	0	0	0	0	0	0	0	0	0
397466.283767677.2	397466.28	3767677	0	0	0	0	0	0	0	0	0	0	0	0	0	0
397566.283767677.2	397566.28	3767677	0	0	0	0	0	0	0	0	0	0	0	0	0	0
397666.283767677.2	397666.28	3767677	0	0	0	0	0	0	0	0	0	0	0	0	0	0
397766.283767677.2	397766.28	3767677	0	0	0	0	0	0	0	0	0	0	0	0	0	0
397866.283767677.2	397866.28	3767677	0	0	0	0	0	0	0	0	0	0	0	0	0	0
396166.283767777.2	396166.28	3767777	0	0	0	0	0	0	0	0	0	0	0	0	0	0
396266.283767777.2	396266.28	3767777	0	0	0	0	0	0	0	0	0	0	0	0	0	0
396366.283767777.2	396366.28	3767777	0	0	0	0	0	0	0	0	0	0	0	0	0	0
396466.283767777.2	396466.28	3767777	0	0	0	0	0	0	0	0	0	0	0	0	0	0
396566.283767777.2	396566.28	3767777	0	0	0	0	0	0	0	0	0	0	0	0	0	0
396666.283767777.2	396666.28	3767777	0	0	0	0	0	0	0	0	0	0	0	0	0	0
396766.283767777.2	396766.28	3767777	0	0	0	0	0	0	0	0	0	0	0	0	0	0
396866.283767777.2	396866.28	3767777	0	0	0	0	0	0	0	0	0	0	0	0	0	0
396966.283767777.2	396966.28	3767777	0	0	0	0	0	0	0	0	0	0	0	0	0	0
397066.283767777.2	397066.28	3767777	0	0	0	0	0	0	0	0	0	0	0	0	0	0
397166.283767777.2	397166.28	3767777	0	0	0	0	0	0	0	0	0	0	0	0	0	0
397266.283767777.2	397266.28	3767777	0	0	0	0	0	0	0	0	0	0	0	0	0	0
397366.283767777.2	397366.28	3767777	0	0	0	0	0	0	0	0	0	0	0	0	0	0
397466.283767777.2	397466.28	3767777	0	0	0	0	0	0	0	0	0	0	0	0	0	0
397566.283767777.2	397566.28	3767777	0	0	0	0	0	0	0	0	0	0	0	0	0	0
397666.283767777.2	397666.28	3767777	0	0	0	0	0	0	0	0	0	0	0	0	0	0
397766.283767777.2	397766.28	3767777	0	0	0	0	0	0	0	0	0	0	0	0	0	0
397866.283767777.2	397866.28	3767777	0	0	0	0	0	0	0	0	0	0	0	0	0	0
396166.283767877.2	396166.28	3767877	0	0	0	0	0	0	0	0	0	0	0	0	0	0
396266.283767877.2	396266.28	3767877	0	0	0	0	0	0	0	0	0	0	0	0	0	0
396366.283767877.2	396366.28	3767877	0	0	0	0	0	0	0	0	0	0	0	0	0	0
396466.283767877.2	396466.28	3767877	0	0	0	0	0	0	0	0	0	0	0	0	0	0
396566.283767877.2	396566.28	3767877	0	0	0	0	0	0	0	0	0	0	0	0	0	0
397466.283767877.2	397466.28	3767877	0	0	0	0	0	0	0	0	0	0	0	0	0	0
397566.283767877.2	397566.28	3767877	0	0	0	0	0	0	0	0	0	0	0	0	0	0
397666.283767877.2	397666.28	3767877	0	0	0	0	0	0	0	0	0	0	0	0	0	0
397766.283767877.2	397766.28	3767877	0	0	0	0	0	0	0	0	0	0	0	0	0	0
397866.283767877.2	397866.28	3767877	0	0	0	0	0	0	0	0	0	0	0	0	0	0
396166.283767977.2	396166.28	3767977	0	0	0	0	0	0	0	0	0	0	0	0	0	0
396266.283767977.2	396266.28	3767977	0	0	0	0	0	0	0	0	0	0	0	0	0	0
396366.283767977.2	396366.28	3767977	0	0	0	0	0	0	0	0	0	0	0	0	0	0
396466.283767977.2	396466.28	3767977	0	0	0	0	0	0	0	0	0	0	0	0	0	0
397466.283767977.2	397466.28	3767977	0	0	0	0	0	0	0	0	0	0	0	0	0	0
397566.283767977.2	397566.28	3767977	0	0	0	0	0	0	0	0	0	0	0	0	0	0
397666.283767977.2	397666.28	3767977	0	0	0	0	0	0	0	0	0	0	0	0	0	0
397766.283767977.2	397766.28	3767977	0	0	0	0	0	0	0	0	0	0	0	0	0	0
397866.283767977.2	397866.28	3767977	0	0	0	0	0	0	0	0	0	0	0	0	0	0
396166.283768077.2	396166.28	3768077	0	0	0	0	0	0	0	0	0	0	0	0	0	0
396266.283768077.2	396266.28	3768077	0	0	0	0	0	0	0	0	0	0	0	0	0	0
396366.283768077.2	396366.28	3768077	0	0	0	0	0	0	0	0	0	0	0	0	0	0
396466.283768077.2	396466.28	3768077	0	0	0	0	0	0	0	0	0	0	0	0	0	0
397466.283768077.2	397466.28	3768077	0	0	0	0	0	0	0	0	0	0	0	0	0	0
397566.283768077.2	397566.28	3768077	0	0	0	0	0	0	0	0	0	0	0	0	0	0

Garvey Reservoir Rehab - Unmitigated Misc. Site Upgrades			Demolition - 2025	Demolition - 2026	Site Preparation - 2025	te Preparation - 202	Grading - 2025	Grading - 2026	Infrastructure - 2025	nfrastructure - 2026	Paving - 2025	rchitectural Coating - 202	Child Risk			
Unique Identifier	X (UTM)	Y (UTM)	2025	1900	2025	2026	2026	1900	2026	1900	2026	1900	3rd Trimester	0<2	Total	per million
397666.283768077.2	397666.28	3768077	0	0	0	0	0	0	0	0	0	0	0	0	0	0
397766.283768077.2	397766.28	3768077	0	0	0	0	0	0	0	0	0	0	0	0	0	0
397866.283768077.2	397866.28	3768077	0	0	0	0	0	0	0	0	0	0	0	0	0	0
396166.283768177.2	396166.28	3768177	0	0	0	0	0	0	0	0	0	0	0	0	0	0
396266.283768177.2	396266.28	3768177	0	0	0	0	0	0	0	0	0	0	0	0	0	0
396366.283768177.2	396366.28	3768177	0	0	0	0	0	0	0	0	0	0	0	0	0	0
396466.283768177.2	396466.28	3768177	0	0	0	0	0	0	0	0	0	0	0	0	0	0
397466.283768177.2	397466.28	3768177	0	0	0	0	0	0	0	0	0	0	0	0	0	0
397566.283768177.2	397566.28	3768177	0	0	0	0	0	0	0	0	0	0	0	0	0	0
397666.283768177.2	397666.28	3768177	0	0	0	0	0	0	0	0	0	0	0	0	0	0
397766.283768177.2	397766.28	3768177	0	0	0	0	0	0	0	0	0	0	0	0	0	0
397866.283768177.2	397866.28	3768177	0	0	0	0	0	0	0	0	0	0	0	0	0	0
396166.283768277.2	396166.28	3768277	0	0	0	0	0	0	0	0	0	0	0	0	0	0
396266.283768277.2	396266.28	3768277	0	0	0	0	0	0	0	0	0	0	0	0	0	0
396366.283768277.2	396366.28	3768277	0	0	0	0	0	0	0	0	0	0	0	0	0	0
396466.283768277.2	396466.28	3768277	0	0	0	0	0	0	0	0	0	0	0	0	0	0
397366.283768277.2	397366.28	3768277	0	0	0	0	0	0	0	0	0	0	0	0	0	0
397466.283768277.2	397466.28	3768277	0	0	0	0	0	0	0	0	0	0	0	0	0	0
397566.283768277.2	397566.28	3768277	0	0	0	0	0	0	0	0	0	0	0	0	0	0
397666.283768277.2	397666.28	3768277	0	0	0	0	0	0	0	0	0	0	0	0	0	0
397766.283768277.2	397766.28	3768277	0	0	0	0	0	0	0	0	0	0	0	0	0	0
397866.283768277.2	397866.28	3768277	0	0	0	0	0	0	0	0	0	0	0	0	0	0
396166.283768377.2	396166.28	3768377	0	0	0	0	0	0	0	0	0	0	0	0	0	0
396266.283768377.2	396266.28	3768377	0	0	0	0	0	0	0	0	0	0	0	0	0	0
396366.283768377.2	396366.28	3768377	0	0	0	0	0	0	0	0	0	0	0	0	0	0
396466.283768377.2	396466.28	3768377	0	0	0	0	0	0	0	0	0	0	0	0	0	0
397266.283768377.2	397266.28	3768377	0	0	0	0	0	0	0	0	0	0	0	0	0	0
397366.283768377.2	397366.28	3768377	0	0	0	0	0	0	0	0	0	0	0	0	0	0
397466.283768377.2	397466.28	3768377	0	0	0	0	0	0	0	0	0	0	0	0	0	0
397566.283768377.2	397566.28	3768377	0	0	0	0	0	0	0	0	0	0	0	0	0	0
397666.283768377.2	397666.28	3768377	0	0	0	0	0	0	0	0	0	0	0	0	0	0
397766.283768377.2	397766.28	3768377	0	0	0	0	0	0	0	0	0	0	0	0	0	0
397866.283768377.2	397866.28	3768377	0	0	0	0	0	0	0	0	0	0	0	0	0	0
396166.283768477.2	396166.28	3768477	0	0	0	0	0	0	0	0	0	0	0	0	0	0
396266.283768477.2	396266.28	3768477	0	0	0	0	0	0	0	0	0	0	0	0	0	0
396366.283768477.2	396366.28	3768477	0	0	0	0	0	0	0	0	0	0	0	0	0	0
396466.283768477.2	396466.28	3768477	0	0	0	0	0	0	0	0	0	0	0	0	0	0
397166.283768477.2	397166.28	3768477	0	0	0	0	0	0	0	0	0	0	0	0	0	0
397266.283768477.2	397266.28	3768477	0	0	0	0	0	0	0	0	0	0	0	0	0	0
397366.283768477.2	397366.28	3768477	0	0	0	0	0	0	0	0	0	0	0	0	0	0
397466.283768477.2	397466.28	3768477	0	0	0	0	0	0	0	0	0	0	0	0	0	0
397566.283768477.2	397566.28	3768477	0	0	0	0	0	0	0	0	0	0	0	0	0	0
397666.283768477.2	397666.28	3768477	0	0	0	0	0	0	0	0	0	0	0	0	0	0
397766.283768477.2	397766.28	3768477	0	0	0	0	0	0	0	0	0	0	0	0	0	0
397866.283768477.2	397866.28	3768477	0	0	0	0	0	0	0	0	0	0	0	0	0	0
396166.283768577.2	396166.28	3768577	0	0	0	0	0	0	0	0	0	0	0	0	0	0
396266.283768577.2	396266.28	3768577	0	0	0	0	0	0	0	0	0	0	0	0	0	0
396366.283768577.2	396366.28	3768577	0	0	0	0	0	0	0	0	0	0	0	0	0	0
396466.283768577.2	396466.28	3768577	0	0	0	0	0	0	0	0	0	0	0	0	0	0
396566.283768577.2	396566.28	3768577	0	0	0	0	0	0	0	0	0	0	0	0	0	0
396866.283768577.2	396866.28	3768577	0	0	0	0	0	0	0	0	0	0	0	0	0	0
396966.283768577.2	396966.28	3768577	0	0	0	0	0	0	0	0	0	0	0	0	0	0
397066.283768577.2	397066.28	3768577	0	0	0	0	0	0	0	0	0	0	0	0	0	0
397166.283768577.2	397166.28	3768577	0	0	0	0	0	0	0	0	0	0	0	0	0	0
397266.283768577.2	397266.28	3768577	0	0	0	0	0	0	0	0	0	0	0	0	0	0
397366.283768577.2	397366.28	3768577	0	0	0	0	0	0	0	0	0	0	0	0	0	0
397466.283768577.2	397466.28	3768577	0	0	0	0	0	0	0	0	0	0	0	0	0	0
397566.283768577.2	397566.28	3768577	0	0	0	0	0	0	0	0	0	0	0	0	0	0
397666.283768577.2	397666.28	3768577	0	0	0	0	0	0	0	0	0	0	0	0	0	0
397766.283768577.2	397766.28	3768577	0	0	0	0	0	0	0	0	0	0	0	0	0	0
397866.283768577.2	397866.28	3768577	0	0	0	0	0	0	0	0	0	0	0	0	0	0
396166.283768677.2	396166.28	3768677	0	0	0	0	0	0	0	0	0	0	0	0	0	0
396266.283768677.2	396266.28	3768677	0	0	0	0	0	0	0	0	0	0	0	0	0	0
396366.283768677.2	396366.28	3768677	0	0	0	0	0	0	0	0	0	0	0	0	0	0
396466.283768677.2	396466.28	3768677	0	0	0	0	0	0	0	0	0	0	0	0	0	0
396566.283768677.2	396566.28	3768677	0	0	0	0	0	0	0	0	0	0	0	0	0	0
396666.283768677.2	396666.28	3768677	0	0	0	0	0	0	0	0	0	0	0	0	0	0
396766.283768677.2	396766.28	3768677	0	0	0	0	0	0	0	0	0	0	0	0	0	0
396866.283768677.2	396866.28	3768677	0	0	0	0	0	0	0	0	0	0	0	0	0	0
396966.283768677.2	396966.28	3768677	0	0	0	0	0	0	0	0	0	0	0	0	0	0
397066.283768677.2	397066.28	3768677	0	0	0	0	0	0	0	0	0	0	0	0	0	0

Garvey Reservoir Rehab - Unmitigated Misc. Site Upgrades			Demolition - 2025	Demolition - 2026	Site Preparation - 2025	te Preparation - 202	Grading - 2025	Grading - 2026	Infrastructure - 2025	nfrastructure - 2026	Paving - 2025	rchitectural Coating - 202	Child Risk			
Unique Identifier	X (UTM)	Y (UTM)	2025	1900	2025	2026	2026	1900	2026	1900	2026	1900	3rd Trimester	0<2	Total	per million
397166.283768677.2	397166.28	3768677	0	0	0	0	0	0	0	0	0	0	0	0	0	0
397366.283768677.2	397366.28	3768677	0	0	0	0	0	0	0	0	0	0	0	0	0	0
397466.283768677.2	397466.28	3768677	0	0	0	0	0	0	0	0	0	0	0	0	0	0
397566.283768677.2	397566.28	3768677	0	0	0	0	0	0	0	0	0	0	0	0	0	0
397666.283768677.2	397666.28	3768677	0	0	0	0	0	0	0	0	0	0	0	0	0	0
397766.283768677.2	397766.28	3768677	0	0	0	0	0	0	0	0	0	0	0	0	0	0
397866.283768677.2	397866.28	3768677	0	0	0	0	0	0	0	0	0	0	0	0	0	0
396166.283768777.2	396166.28	3768777	0	0	0	0	0	0	0	0	0	0	0	0	0	0
396266.283768777.2	396266.28	3768777	0	0	0	0	0	0	0	0	0	0	0	0	0	0
396366.283768777.2	396366.28	3768777	0	0	0	0	0	0	0	0	0	0	0	0	0	0
396466.283768777.2	396466.28	3768777	0	0	0	0	0	0	0	0	0	0	0	0	0	0
396566.283768777.2	396566.28	3768777	0	0	0	0	0	0	0	0	0	0	0	0	0	0
396666.283768777.2	396666.28	3768777	0	0	0	0	0	0	0	0	0	0	0	0	0	0
396766.283768777.2	396766.28	3768777	0	0	0	0	0	0	0	0	0	0	0	0	0	0
396866.283768777.2	396866.28	3768777	0	0	0	0	0	0	0	0	0	0	0	0	0	0
396966.283768777.2	396966.28	3768777	0	0	0	0	0	0	0	0	0	0	0	0	0	0
397066.283768777.2	397066.28	3768777	0	0	0	0	0	0	0	0	0	0	0	0	0	0
397166.283768777.2	397166.28	3768777	0	0	0	0	0	0	0	0	0	0	0	0	0	0
397266.283768777.2	397266.28	3768777	0	0	0	0	0	0	0	0	0	0	0	0	0	0
397366.283768777.2	397366.28	3768777	0	0	0	0	0	0	0	0	0	0	0	0	0	0
397466.283768777.2	397466.28	3768777	0	0	0	0	0	0	0	0	0	0	0	0	0	0
397566.283768777.2	397566.28	3768777	0	0	0	0	0	0	0	0	0	0	0	0	0	0
397666.283768777.2	397666.28	3768777	0	0	0	0	0	0	0	0	0	0	0	0	0	0
397766.283768777.2	397766.28	3768777	0	0	0	0	0	0	0	0	0	0	0	0	0	0
397866.283768777.2	397866.28	3768777	0	0	0	0	0	0	0	0	0	0	0	0	0	0
396166.283768877.2	396166.28	3768877	0	0	0	0	0	0	0	0	0	0	0	0	0	0
396266.283768877.2	396266.28	3768877	0	0	0	0	0	0	0	0	0	0	0	0	0	0
396366.283768877.2	396366.28	3768877	0	0	0	0	0	0	0	0	0	0	0	0	0	0
396466.283768877.2	396466.28	3768877	0	0	0	0	0	0	0	0	0	0	0	0	0	0
396566.283768877.2	396566.28	3768877	0	0	0	0	0	0	0	0	0	0	0	0	0	0
396666.283768877.2	396666.28	3768877	0	0	0	0	0	0	0	0	0	0	0	0	0	0
396766.283768877.2	396766.28	3768877	0	0	0	0	0	0	0	0	0	0	0	0	0	0
396866.283768877.2	396866.28	3768877	0	0	0	0	0	0	0	0	0	0	0	0	0	0
396966.283768877.2	396966.28	3768877	0	0	0	0	0	0	0	0	0	0	0	0	0	0
397066.283768877.2	397066.28	3768877	0	0	0	0	0	0	0	0	0	0	0	0	0	0
397166.283768877.2	397166.28	3768877	0	0	0	0	0	0	0	0	0	0	0	0	0	0
397266.283768877.2	397266.28	3768877	0	0	0	0	0	0	0	0	0	0	0	0	0	0
397366.283768877.2	397366.28	3768877	0	0	0	0	0	0	0	0	0	0	0	0	0	0
397466.283768877.2	397466.28	3768877	0	0	0	0	0	0	0	0	0	0	0	0	0	0
397566.283768877.2	397566.28	3768877	0	0	0	0	0	0	0	0	0	0	0	0	0	0
397666.283768877.2	397666.28	3768877	0	0	0	0	0	0	0	0	0	0	0	0	0	0
397766.283768877.2	397766.28	3768877	0	0	0	0	0	0	0	0	0	0	0	0	0	0
397866.283768877.2	397866.28	3768877	0	0	0	0	0	0	0	0	0	0	0	0	0	0
3964253767739	396425	3767739	0	0	0	0	0	0	0	0	0	0	0	0	0	0
3964753767739	396475	3767739	0	0	0	0	0	0	0	0	0	0	0	0	0	0
3965253767739	396525	3767739	0	0	0	0	0	0	0	0	0	0	0	0	0	0
3965753767739	396575	3767739	0	0	0	0	0	0	0	0	0	0	0	0	0	0
3966253767739	396625	3767739	0	0	0	0	0	0	0	0	0	0	0	0	0	0
3966753767739	396675	3767739	0	0	0	0	0	0	0	0	0	0	0	0	0	0
3967253767739	396725	3767739	0	0	0	0	0	0	0	0	0	0	0	0	0	0
3967753767739	396775	3767739	0	0	0	0	0	0	0	0	0	0	0	0	0	0
3968253767739	396825	3767739	0	0	0	0	0	0	0	0	0	0	0	0	0	0
3968753767739	396875	3767739	0	0	0	0	0	0	0	0	0	0	0	0	0	0
3969253767739	396925	3767739	0	0	0	0	0	0	0	0	0	0	0	0	0	0
3969753767739	396975	3767739	0	0	0	0	0	0	0	0	0	0	0	0	0	0
3970253767739	397025	3767739	0	0	0	0	0	0	0	0	0	0	0	0	0	0
3970753767739	397075	3767739	0	0	0	0	0	0	0	0	0	0	0	0	0	0
3971253767739	397125	3767739	0	0	0	0	0	0	0	0	0	0	0	0	0	0
3971753767739	397175	3767739	0	0	0	0	0	0	0	0	0	0	0	0	0	0
3972253767739	397225	3767739	0	0	0	0	0	0	0	0	0	0	0	0	0	0
3972753767739	397275	3767739	0	0	0	0	0	0	0	0	0	0	0	0	0	0
3973253767739	397325	3767739	0	0	0	0	0	0	0	0	0	0	0	0	0	0
3973753767739	397375	3767739	0	0	0	0	0	0	0	0	0	0	0	0	0	0
3974253767739	397425	3767739	0	0	0	0	0	0	0	0	0	0	0	0	0	0
3974753767739	397475	3767739	0	0	0	0	0	0	0	0	0	0	0	0	0	0
3975253767739	397525	3767739	0	0	0	0	0	0	0	0	0	0	0	0	0	0
3964253767789	396425	3767789	0	0	0	0	0	0	0	0	0	0	0	0	0	0
3964753767789	396475	3767789	0	0	0	0	0	0	0	0	0	0	0	0	0	0
3965253767789	396525	3767789	0	0	0	0	0	0	0	0	0	0	0	0	0	0
3965753767789	396575	3767789	0	0	0	0	0	0	0	0	0	0	0	0	0	0
3966253767789	396625	3767789	0	0	0	0	0	0	0	0	0	0	0	0	0	0

Garvey Reservoir Rehab - Unmitigated Misc. Site Upgrades			Demolition - 2025	Demolition - 2026	Site Preparation - 2025	ite Preparation - 202	Grading - 2025	Grading - 2026	Infrastructure - 2025	nfrastructure - 2026	Paving - 2025	rchitectural Coating - 202	Child Risk			
Unique Identifier	X (UTM)	Y (UTM)	2025	1900	2025	2026	2026	1900	2026	1900	2026	1900	3rd Trimester	0<2	Total	per million
3966753767789	396675	3767789	0	0	0	0	0	0	0	0	0	0	0	0	0	0
3967253767789	396725	3767789	0	0	0	0	0	0	0	0	0	0	0	0	0	0
3967753767789	396775	3767789	0	0	0	0	0	0	0	0	0	0	0	0	0	0
3968253767789	396825	3767789	0	0	0	0	0	0	0	0	0	0	0	0	0	0
3968753767789	396875	3767789	0	0	0	0	0	0	0	0	0	0	0	0	0	0
3969253767789	396925	3767789	0	0	0	0	0	0	0	0	0	0	0	0	0	0
3969753767789	396975	3767789	0	0	0	0	0	0	0	0	0	0	0	0	0	0
3970253767789	397025	3767789	0	0	0	0	0	0	0	0	0	0	0	0	0	0
3970753767789	397075	3767789	0	0	0	0	0	0	0	0	0	0	0	0	0	0
3971253767789	397125	3767789	0	0	0	0	0	0	0	0	0	0	0	0	0	0
3971753767789	397175	3767789	0	0	0	0	0	0	0	0	0	0	0	0	0	0
3972253767789	397225	3767789	0	0	0	0	0	0	0	0	0	0	0	0	0	0
3972753767789	397275	3767789	0	0	0	0	0	0	0	0	0	0	0	0	0	0
3973253767789	397325	3767789	0	0	0	0	0	0	0	0	0	0	0	0	0	0
3973753767789	397375	3767789	0	0	0	0	0	0	0	0	0	0	0	0	0	0
3974253767789	397425	3767789	0	0	0	0	0	0	0	0	0	0	0	0	0	0
3974753767789	397475	3767789	0	0	0	0	0	0	0	0	0	0	0	0	0	0
3975253767789	397525	3767789	0	0	0	0	0	0	0	0	0	0	0	0	0	0
3964253767839	396425	3767839	0	0	0	0	0	0	0	0	0	0	0	0	0	0
3964753767839	396475	3767839	0	0	0	0	0	0	0	0	0	0	0	0	0	0
3965253767839	396525	3767839	0	0	0	0	0	0	0	0	0	0	0	0	0	0
3965753767839	396575	3767839	0	0	0	0	0	0	0	0	0	0	0	0	0	0
3966253767839	396625	3767839	0	0	0	0	0	0	0	0	0	0	0	0	0	0
3966753767839	396675	3767839	0	0	0	0	0	0	0	0	0	0	0	0	0	0
3967253767839	396725	3767839	0	0	0	0	0	0	0	0	0	0	0	0	0	0
3967753767839	396775	3767839	0	0	0	0	0	0	0	0	0	0	0	0	0	0
3968253767839	396825	3767839	0	0	0	0	0	0	0	0	0	0	0	0	0	0
3968753767839	396875	3767839	0	0	0	0	0	0	0	0	0	0	0	0	0	0
3969253767839	396925	3767839	0	0	0	0	0	0	0	0	0	0	0	0	0	0
3969753767839	396975	3767839	0	0	0	0	0	0	0	0	0	0	0	0	0	0
3970253767839	397025	3767839	0	0	0	0	0	0	0	0	0	0	0	0	0	0
3970753767839	397075	3767839	0	0	0	0	0	0	0	0	0	0	0	0	0	0
3971253767839	397125	3767839	0	0	0	0	0	0	0	0	0	0	0	0	0	0
3971753767839	397175	3767839	0	0	0	0	0	0	0	0	0	0	0	0	0	0
3972253767839	397225	3767839	0	0	0	0	0	0	0	0	0	0	0	0	0	0
3972753767839	397275	3767839	0	0	0	0	0	0	0	0	0	0	0	0	0	0
3973253767839	397325	3767839	0	0	0	0	0	0	0	0	0	0	0	0	0	0
3973753767839	397375	3767839	0	0	0	0	0	0	0	0	0	0	0	0	0	0
3974753767839	397475	3767839	0	0	0	0	0	0	0	0	0	0	0	0	0	0
3975253767839	397525	3767839	0	0	0	0	0	0	0	0	0	0	0	0	0	0
3964253767889	396425	3767889	0	0	0	0	0	0	0	0	0	0	0	0	0	0
3964753767889	396475	3767889	0	0	0	0	0	0	0	0	0	0	0	0	0	0
3965253767889	396525	3767889	0	0	0	0	0	0	0	0	0	0	0	0	0	0
3965753767889	396575	3767889	0	0	0	0	0	0	0	0	0	0	0	0	0	0
3974753767889	397475	3767889	0	0	0	0	0	0	0	0	0	0	0	0	0	0
3975253767889	397525	3767889	0	0	0	0	0	0	0	0	0	0	0	0	0	0
3964253767939	396425	3767939	0	0	0	0	0	0	0	0	0	0	0	0	0	0
3964753767939	396475	3767939	0	0	0	0	0	0	0	0	0	0	0	0	0	0
3965253767939	396525	3767939	0	0	0	0	0	0	0	0	0	0	0	0	0	0
3974753767939	397475	3767939	0	0	0	0	0	0	0	0	0	0	0	0	0	0
3975253767939	397525	3767939	0	0	0	0	0	0	0	0	0	0	0	0	0	0
3964253767989	396425	3767989	0	0	0	0	0	0	0	0	0	0	0	0	0	0
3964753767989	396475	3767989	0	0	0	0	0	0	0	0	0	0	0	0	0	0
3974753767989	397475	3767989	0	0	0	0	0	0	0	0	0	0	0	0	0	0
3975253767989	397525	3767989	0	0	0	0	0	0	0	0	0	0	0	0	0	0
3964253768039	396425	3768039	0	0	0	0	0	0	0	0	0	0	0	0	0	0
3964753768039	396475	3768039	0	0	0	0	0	0	0	0	0	0	0	0	0	0
3974753768039	397475	3768039	0	0	0	0	0	0	0	0	0	0	0	0	0	0
3975253768039	397525	3768039	0	0	0	0	0	0	0	0	0	0	0	0	0	0
3964253768089	396425	3768089	0	0	0	0	0	0	0	0	0	0	0	0	0	0
3964753768089	396475	3768089	0	0	0	0	0	0	0	0	0	0	0	0	0	0
3974753768089	397475	3768089	0	0	0	0	0	0	0	0	0	0	0	0	0	0
3975253768089	397525	3768089	0	0	0	0	0	0	0	0	0	0	0	0	0	0
3964253768139	396425	3768139	0	0	0	0	0	0	0	0	0	0	0	0	0	0
3964753768139	396475	3768139	0	0	0	0	0	0	0	0	0	0	0	0	0	0
3974253768139	397425	3768139	0	0	0	0	0	0	0	0	0	0	0	0	0	0
3974753768139	397475	3768139	0	0	0	0	0	0	0	0	0	0	0	0	0	0
3975253768139	397525	3768139	0	0	0	0	0	0	0	0	0	0	0	0	0	0
3964253768189	396425	3768189	0	0	0	0	0	0	0	0	0	0	0	0	0	0
3964753768189	396475	3768189	0	0	0	0	0	0	0	0	0	0	0	0	0	0
3973753768189	397375	3768189	0	0	0	0	0	0	0	0	0	0	0	0	0	0

Garvey Reservoir Rehab - Unmitigated Misc. Site Upgrades			Demolition - 2025	Demolition - 2026	Site Preparation - 2025	te Preparation - 202	Grading - 2025	Grading - 2026	Infrastructure - 2025	nfrastructure - 2026	Paving - 2025	rchitectural Coating - 202	Child Risk			
Unique Identifier	X (UTM)	Y (UTM)	2025	1900	2025	2026	2026	1900	2026	1900	2026	1900	3rd Trimester	0<2	Total	per million
3974253768189	397425	3768189	0	0	0	0	0	0	0	0	0	0	0	0	0	0
3974753768189	397475	3768189	0	0	0	0	0	0	0	0	0	0	0	0	0	0
3975253768189	397525	3768189	0	0	0	0	0	0	0	0	0	0	0	0	0	0
3964253768239	396425	3768239	0	0	0	0	0	0	0	0	0	0	0	0	0	0
3964753768239	396475	3768239	0	0	0	0	0	0	0	0	0	0	0	0	0	0
3973753768239	397375	3768239	0	0	0	0	0	0	0	0	0	0	0	0	0	0
3974253768239	397425	3768239	0	0	0	0	0	0	0	0	0	0	0	0	0	0
3974753768239	397475	3768239	0	0	0	0	0	0	0	0	0	0	0	0	0	0
3975253768239	397525	3768239	0	0	0	0	0	0	0	0	0	0	0	0	0	0
3964253768289	396425	3768289	0	0	0	0	0	0	0	0	0	0	0	0	0	0
3964753768289	396475	3768289	0	0	0	0	0	0	0	0	0	0	0	0	0	0
3973253768289	397325	3768289	0	0	0	0	0	0	0	0	0	0	0	0	0	0
3973753768289	397375	3768289	0	0	0	0	0	0	0	0	0	0	0	0	0	0
3974253768289	397425	3768289	0	0	0	0	0	0	0	0	0	0	0	0	0	0
3974753768289	397475	3768289	0	0	0	0	0	0	0	0	0	0	0	0	0	0
3975253768289	397525	3768289	0	0	0	0	0	0	0	0	0	0	0	0	0	0
3964253768339	396425	3768339	0	0	0	0	0	0	0	0	0	0	0	0	0	0
3964753768339	396475	3768339	0	0	0	0	0	0	0	0	0	0	0	0	0	0
3965253768339	396525	3768339	0	0	0	0	0	0	0	0	0	0	0	0	0	0
3972753768339	397275	3768339	0	0	0	0	0	0	0	0	0	0	0	0	0	0
3973253768339	397325	3768339	0	0	0	0	0	0	0	0	0	0	0	0	0	0
3973753768339	397375	3768339	0	0	0	0	0	0	0	0	0	0	0	0	0	0
3974253768339	397425	3768339	0	0	0	0	0	0	0	0	0	0	0	0	0	0
3974753768339	397475	3768339	0	0	0	0	0	0	0	0	0	0	0	0	0	0
3975253768339	397525	3768339	0	0	0	0	0	0	0	0	0	0	0	0	0	0
3964253768389	396425	3768389	0	0	0	0	0	0	0	0	0	0	0	0	0	0
3964753768389	396475	3768389	0	0	0	0	0	0	0	0	0	0	0	0	0	0
3965253768389	396525	3768389	0	0	0	0	0	0	0	0	0	0	0	0	0	0
3972253768389	397225	3768389	0	0	0	0	0	0	0	0	0	0	0	0	0	0
3972753768389	397275	3768389	0	0	0	0	0	0	0	0	0	0	0	0	0	0
3973253768389	397325	3768389	0	0	0	0	0	0	0	0	0	0	0	0	0	0
3973753768389	397375	3768389	0	0	0	0	0	0	0	0	0	0	0	0	0	0
3974253768389	397425	3768389	0	0	0	0	0	0	0	0	0	0	0	0	0	0
3974753768389	397475	3768389	0	0	0	0	0	0	0	0	0	0	0	0	0	0
3975253768389	397525	3768389	0	0	0	0	0	0	0	0	0	0	0	0	0	0
3964253768439	396425	3768439	0	0	0	0	0	0	0	0	0	0	0	0	0	0
3964753768439	396475	3768439	0	0	0	0	0	0	0	0	0	0	0	0	0	0
3965253768439	396525	3768439	0	0	0	0	0	0	0	0	0	0	0	0	0	0
3971753768439	397175	3768439	0	0	0	0	0	0	0	0	0	0	0	0	0	0
3972253768439	397225	3768439	0	0	0	0	0	0	0	0	0	0	0	0	0	0
3972753768439	397275	3768439	0	0	0	0	0	0	0	0	0	0	0	0	0	0
3973253768439	397325	3768439	0	0	0	0	0	0	0	0	0	0	0	0	0	0
3973753768439	397375	3768439	0	0	0	0	0	0	0	0	0	0	0	0	0	0
3974253768439	397425	3768439	0	0	0	0	0	0	0	0	0	0	0	0	0	0
3974753768439	397475	3768439	0	0	0	0	0	0	0	0	0	0	0	0	0	0
3975253768439	397525	3768439	0	0	0	0	0	0	0	0	0	0	0	0	0	0
3964253768489	396425	3768489	0	0	0	0	0	0	0	0	0	0	0	0	0	0
3964753768489	396475	3768489	0	0	0	0	0	0	0	0	0	0	0	0	0	0
3965253768489	396525	3768489	0	0	0	0	0	0	0	0	0	0	0	0	0	0
3970753768489	397075	3768489	0	0	0	0	0	0	0	0	0	0	0	0	0	0
3971253768489	397125	3768489	0	0	0	0	0	0	0	0	0	0	0	0	0	0
3971753768489	397175	3768489	0	0	0	0	0	0	0	0	0	0	0	0	0	0
3972253768489	397225	3768489	0	0	0	0	0	0	0	0	0	0	0	0	0	0
3972753768489	397275	3768489	0	0	0	0	0	0	0	0	0	0	0	0	0	0
3973253768489	397325	3768489	0	0	0	0	0	0	0	0	0	0	0	0	0	0
3973753768489	397375	3768489	0	0	0	0	0	0	0	0	0	0	0	0	0	0
3974253768489	397425	3768489	0	0	0	0	0	0	0	0	0	0	0	0	0	0
3974753768489	397475	3768489	0	0	0	0	0	0	0	0	0	0	0	0	0	0
3975253768489	397525	3768489	0	0	0	0	0	0	0	0	0	0	0	0	0	0
3964253768539	396425	3768539	0	0	0	0	0	0	0	0	0	0	0	0	0	0
3964753768539	396475	3768539	0	0	0	0	0	0	0	0	0	0	0	0	0	0
3965253768539	396525	3768539	0	0	0	0	0	0	0	0	0	0	0	0	0	0
3965753768539	396575	3768539	0	0	0	0	0	0	0	0	0	0	0	0	0	0
3970253768539	397025	3768539	0	0	0	0	0	0	0	0	0	0	0	0	0	0
3970753768539	397075	3768539	0	0	0	0	0	0	0	0	0	0	0	0	0	0
3971253768539	397125	3768539	0	0	0	0	0	0	0	0	0	0	0	0	0	0
3971753768539	397175	3768539	0	0	0	0	0	0	0	0	0	0	0	0	0	0
3972253768539	397225	3768539	0	0	0	0	0	0	0	0	0	0	0	0	0	0
3972753768539	397275	3768539	0	0	0	0	0	0	0	0	0	0	0	0	0	0
3973253768539	397325	3768539	0	0	0	0	0	0	0	0	0	0	0	0	0	0
3973753768539	397375	3768539	0	0	0	0	0	0	0	0	0	0	0	0	0	0

Garvey Reservoir Rehab - Unmitigated Misc. Site Upgrades			Demolition - 2025	Demolition - 2026	Site Preparation - 2025	te Preparation - 202	Grading - 2025	Grading - 2026	Infrastructure - 2025	nfrastructure - 2026	Paving - 2025	rchitectural Coating - 202	Child Risk			
Unique Identifier	X (UTM)	Y (UTM)	2025	1900	2025	2026	2026	1900	2026	1900	2026	1900	3rd Trimester	0<2	Total	per million
3974253768539	397425	3768539	0	0	0	0	0	0	0	0	0	0	0	0	0	0
3974753768539	397475	3768539	0	0	0	0	0	0	0	0	0	0	0	0	0	0
3975253768539	397525	3768539	0	0	0	0	0	0	0	0	0	0	0	0	0	0
3964253768589	396425	3768589	0	0	0	0	0	0	0	0	0	0	0	0	0	0
3964753768589	396475	3768589	0	0	0	0	0	0	0	0	0	0	0	0	0	0
3965253768589	396525	3768589	0	0	0	0	0	0	0	0	0	0	0	0	0	0
3965753768589	396575	3768589	0	0	0	0	0	0	0	0	0	0	0	0	0	0
3966253768589	396625	3768589	0	0	0	0	0	0	0	0	0	0	0	0	0	0
3968253768589	396825	3768589	0	0	0	0	0	0	0	0	0	0	0	0	0	0
3968753768589	396875	3768589	0	0	0	0	0	0	0	0	0	0	0	0	0	0
3969253768589	396925	3768589	0	0	0	0	0	0	0	0	0	0	0	0	0	0
3969753768589	396975	3768589	0	0	0	0	0	0	0	0	0	0	0	0	0	0
3970253768589	397025	3768589	0	0	0	0	0	0	0	0	0	0	0	0	0	0
3970753768589	397075	3768589	0	0	0	0	0	0	0	0	0	0	0	0	0	0
3971253768589	397125	3768589	0	0	0	0	0	0	0	0	0	0	0	0	0	0
3971753768589	397175	3768589	0	0	0	0	0	0	0	0	0	0	0	0	0	0
3972253768589	397225	3768589	0	0	0	0	0	0	0	0	0	0	0	0	0	0
3972753768589	397275	3768589	0	0	0	0	0	0	0	0	0	0	0	0	0	0
3973253768589	397325	3768589	0	0	0	0	0	0	0	0	0	0	0	0	0	0
3973753768589	397375	3768589	0	0	0	0	0	0	0	0	0	0	0	0	0	0
3974253768589	397425	3768589	0	0	0	0	0	0	0	0	0	0	0	0	0	0
3974753768589	397475	3768589	0	0	0	0	0	0	0	0	0	0	0	0	0	0
3975253768589	397525	3768589	0	0	0	0	0	0	0	0	0	0	0	0	0	0
3964253768639	396425	3768639	0	0	0	0	0	0	0	0	0	0	0	0	0	0
3964753768639	396475	3768639	0	0	0	0	0	0	0	0	0	0	0	0	0	0
3965253768639	396525	3768639	0	0	0	0	0	0	0	0	0	0	0	0	0	0
3965753768639	396575	3768639	0	0	0	0	0	0	0	0	0	0	0	0	0	0
3966253768639	396625	3768639	0	0	0	0	0	0	0	0	0	0	0	0	0	0
3966753768639	396675	3768639	0	0	0	0	0	0	0	0	0	0	0	0	0	0
3967253768639	396725	3768639	0	0	0	0	0	0	0	0	0	0	0	0	0	0
3967753768639	396775	3768639	0	0	0	0	0	0	0	0	0	0	0	0	0	0
3968253768639	396825	3768639	0	0	0	0	0	0	0	0	0	0	0	0	0	0
3968753768639	396875	3768639	0	0	0	0	0	0	0	0	0	0	0	0	0	0
3969253768639	396925	3768639	0	0	0	0	0	0	0	0	0	0	0	0	0	0
3969753768639	396975	3768639	0	0	0	0	0	0	0	0	0	0	0	0	0	0
3970253768639	397025	3768639	0	0	0	0	0	0	0	0	0	0	0	0	0	0
3970753768639	397075	3768639	0	0	0	0	0	0	0	0	0	0	0	0	0	0
3971253768639	397125	3768639	0	0	0	0	0	0	0	0	0	0	0	0	0	0
3971753768639	397175	3768639	0	0	0	0	0	0	0	0	0	0	0	0	0	0
3972253768639	397225	3768639	0	0	0	0	0	0	0	0	0	0	0	0	0	0
3972753768639	397275	3768639	0	0	0	0	0	0	0	0	0	0	0	0	0	0
3973253768639	397325	3768639	0	0	0	0	0	0	0	0	0	0	0	0	0	0
3973753768639	397375	3768639	0	0	0	0	0	0	0	0	0	0	0	0	0	0
3974253768639	397425	3768639	0	0	0	0	0	0	0	0	0	0	0	0	0	0
3974753768639	397475	3768639	0	0	0	0	0	0	0	0	0	0	0	0	0	0
3975253768639	397525	3768639	0	0	0	0	0	0	0	0	0	0	0	0	0	0
3964253768689	396425	3768689	0	0	0	0	0	0	0	0	0	0	0	0	0	0
3964753768689	396475	3768689	0	0	0	0	0	0	0	0	0	0	0	0	0	0
3965253768689	396525	3768689	0	0	0	0	0	0	0	0	0	0	0	0	0	0
3965753768689	396575	3768689	0	0	0	0	0	0	0	0	0	0	0	0	0	0
3966253768689	396625	3768689	0	0	0	0	0	0	0	0	0	0	0	0	0	0
3966753768689	396675	3768689	0	0	0	0	0	0	0	0	0	0	0	0	0	0
3967253768689	396725	3768689	0	0	0	0	0	0	0	0	0	0	0	0	0	0
3967753768689	396775	3768689	0	0	0	0	0	0	0	0	0	0	0	0	0	0
3968253768689	396825	3768689	0	0	0	0	0	0	0	0	0	0	0	0	0	0
3968753768689	396875	3768689	0	0	0	0	0	0	0	0	0	0	0	0	0	0
3969253768689	396925	3768689	0	0	0	0	0	0	0	0	0	0	0	0	0	0
3969753768689	396975	3768689	0	0	0	0	0	0	0	0	0	0	0	0	0	0
3970253768689	397025	3768689	0	0	0	0	0	0	0	0	0	0	0	0	0	0
3970753768689	397075	3768689	0	0	0	0	0	0	0	0	0	0	0	0	0	0
3971253768689	397125	3768689	0	0	0	0	0	0	0	0	0	0	0	0	0	0
3971753768689	397175	3768689	0	0	0	0	0	0	0	0	0	0	0	0	0	0
3972253768689	397225	3768689	0	0	0	0	0	0	0	0	0	0	0	0	0	0
3972753768689	397275	3768689	0	0	0	0	0	0	0	0	0	0	0	0	0	0
3973253768689	397325	3768689	0	0	0	0	0	0	0	0	0	0	0	0	0	0
3973753768689	397375	3768689	0	0	0	0	0	0	0	0	0	0	0	0	0	0
3974253768689	397425	3768689	0	0	0	0	0	0	0	0	0	0	0	0	0	0
3974753768689	397475	3768689	0	0	0	0	0	0	0	0	0	0	0	0	0	0
3975253768689	397525	3768689	0	0	0	0	0	0	0	0	0	0	0	0	0	0

Garvey Reservoir Rehab - Unmitigated Misc. Site Upgrades

Maximum Individual Non-Cancer Impact Calculations - Sensitive Receptors (Maximum Impacted Senior Residential Receptor) (IMPACT AT ALL OTHER LOCATIONS ON THE PROJECT SITE WOULD BE LESS THAN SHOWN)

Maximum Non-cancer Chronic Hazards / Toxicological Endpoints*

Receptor Group	Pollutant	CREL[1]	CONC	WFrac	$CONC_{WF}$	HI		ALIM	BN	CVS	DEV	ENDC	EYE	HEM	IMMUN	KIDN	NS	REPRO	RESP	SK
Project:																				
MEI - Max	DPM	5.00E+00	6.53E-02	1.00E+00	6.53E-02	0.013		-	-	-	-	-	-	-	-	-	-	-	1.31E-02	-
							Total Risk				-			-				-	0.013	
							Threshold				1.00			1.00				1.00	1.00	
							Over?				NO			NO				NO	NO	

Notes:

1. California Air Resources Board, "Consolidated Table of OEHHA/ARB Approved Risk Assessment Health Values," "OEHHA/ARB Approved Chronic Reference Exposure Levels and Target Organs," "OEHHA/ARB Approved Acute Reference Exposure Levels and Target Organs," and "OEHHA/ARB Approved 8-Hour Reference Exposure Levels and Target Organs," http://www.arb.ca.gov/toxics/healthval/healthval.htm. Tables last updated: May 8, 2018. Downloaded: 08/14/18.

Source: ESA, 2020

Where:

$CONC_{WF}$	Pollutant Concentration ($\mu g/m^3$) multiplied by the weight fraction
CREL	Chronic Reference Exposure Level
HI	Hazard Index
MEI	Maximally Exposed Individual
WFrac	Weight fraction of speciated component

* Key to Toxicological Endpoints

ALIM	Alimentary Tract	EYE	Eye	NS	Nervous System
BN	Bone	HEM	Hematologic System	REPRO	Reproductive System
CVS	Cardiovascular System	IMMUN	Immune System	RESP	Respiratory System
DEV	Developmental System	KIDN	Kidney	SK	Skin
ENDC	Endocrine System				

Garvey Reservoir Rehab - Mitigated Misc. Site Upgrades

Cancer Risk Summary & Maximum Annual GLC for Chronic Calculations

Cancer Risk Summary

Max Risk: 0.230246

XY	X	Y	Offroad Risk	Haul Risk	Total Risk
7449041451	574490	4145130	0.005124169	0	0.005124
7448041451	574480	4145140	0.005594151	0	0.005594
7449041451	574490	4145140	0.006297284	0	0.006297
7449041451	574490	4145150	0.006879818	0	0.00688
7450041451	574500	4145150	0.007529231	0	0.007529
7446041451	574460	4145160	0.0078264	0	0.007826
7449041451	574490	4145160	0.007863847	0	0.007864
7450041451	574500	4145160	0.007939057	0	0.007939
7451041451	574510	4145160	0.008187762	0	0.008188
7446041451	574460	4145170	0.008109877	0	0.00811
7447041451	574470	4145170	0.007703748	0	0.007704
7448041451	574480	4145170	0.00707865	0	0.007079
7449041451	574490	4145170	0.006609904	0	0.00661
7450041451	574500	4145170	0.006030131	0	0.00603
7451041451	574510	4145170	0.005393427	0	0.005393
7452041451	574520	4145170	0.004782509	0	0.004783
7446041451	574460	4145180	0.004154312	0	0.004154
7447041451	574470	4145180	0.003662784	0	0.003663
7448041451	574480	4145180	0.005977575	0	0.005978
7449041451	574490	4145180	0.006590733	0	0.006591
7450041451	574500	4145180	0.007697236	0	0.007697
7451041451	574510	4145180	0.008713357	0	0.008713
7452041451	574520	4145180	0.009624358	0	0.009624
7453041451	574530	4145180	0.01021279	0	0.010213
7445041451	574450	4145190	0.010511344	0	0.010511
7446041451	574460	4145190	0.010679942	0	0.01068
7447041451	574470	4145190	0.011023696	0	0.011024
7448041451	574480	4145190	0.010966705	0	0.010967
7449041451	574490	4145190	0.010401163	0	0.010401
7450041451	574500	4145190	0.009475764	0	0.009476
7451041451	574510	4145190	0.008539232	0	0.008539
7452041451	574520	4145190	0.00762255	0	0.007623
7444041452	574440	4145200	0.006595756	0	0.006596
7445041452	574450	4145200	0.005662661	0	0.005663
7446041452	574460	4145200	0.004858158	0	0.004858
7447041452	574470	4145200	0.004195645	0	0.004196
7448041452	574480	4145200	0.006828654	0	0.006829
7449041452	574490	4145200	0.007915717	0	0.007916
7450041452	574500	4145200	0.009419939	0	0.00942
7451041452	574510	4145200	0.011216088	0	0.011216
7443041452	574430	4145210	0.013096971	0	0.013097
7444041452	574440	4145210	0.014589421	0	0.014589
7445041452	574450	4145210	0.014744933	0	0.014745
7446041452	574460	4145210	0.015496326	0	0.015496
7447041452	574470	4145210	0.015693604	0	0.015694
7448041452	574480	4145210	0.015595325	0	0.015595
7449041452	574490	4145210	0.015034907	0	0.015035
7450041452	574500	4145210	0.013636132	0	0.013636
7451041452	574510	4145210	0.011832051	0	0.011832
7443041452	574430	4145220	0.010130217	0	0.01013
7444041452	574440	4145220	0.008302531	0	0.008303
7445041452	574450	4145220	0.006805412	0	0.006805
7446041452	574460	4145220	0.005642234	0	0.005642
7447041452	574470	4145220	0.004743496	0	0.004743
7448041452	574480	4145220	0.007899827	0	0.0079
7449041452	574490	4145220	0.009595749	0	0.009596
7450041452	574500	4145220	0.012118789	0	0.012119
7451041452	574510	4145220	0.015723103	0	0.015723
7452041452	574520	4145220	0.019358782	0	0.019359
7453041452	574530	4145220	0.021784238	0	0.021784
7444041452	574440	4145230	0.024231754	0	0.024232
7445041452	574450	4145230	0.026086636	0	0.026087

Max GLC for Chronic Calcs

Max GLC: 0.006567

XY	X	Y	2025	2026	2027	2034	2035
57449041451	574490	4145130	0.0001461	0.0001161	0		
57448041451	574480	4145140	0.0001596	0.0001267	0		
57449041451	574490	4145140	0.0001796	0.0001426	0		
57449041451	574490	4145150	0.0001962	0.0001558	0		
57450041451	574500	4145150	0.0002147	0.0001705	0		
57446041451	574460	4145160	0.0002232	0.0001773	0		
57449041451	574490	4145160	0.0002243	0.0001781	0		
57450041451	574500	4145160	0.0002264	0.0001798	0		
57451041451	574510	4145160	0.0002335	0.0001854	0		
57446041451	574460	4145170	0.0002313	0.0001837	0		
57447041451	574470	4145170	0.0002197	0.0001745	0		
57448041451	574480	4145170	0.0002019	0.0001603	0		
57449041451	574490	4145170	0.0001885	0.0001497	0		
57450041451	574500	4145170	0.000172	0.0001366	0		
57451041451	574510	4145170	0.0001538	0.0001222	0		
57452041451	574520	4145170	0.0001364	0.0001083	0		
57446041451	574460	4145180	0.0001185	9.409E-05	0		
57447041451	574470	4145180	0.0001045	8.296E-05	0		
57448041451	574480	4145180	0.0001705	0.0001354	0		
57449041451	574490	4145180	0.000188	0.0001493	0		
57450041451	574500	4145180	0.0002195	0.0001743	0		
57451041451	574510	4145180	0.0002485	0.0001974	0		
57452041451	574520	4145180	0.0002745	0.000218	0		
57453041451	574530	4145180	0.0002913	0.0002313	0		
57445041451	574450	4145190	0.0002998	0.0002381	0		
57446041451	574460	4145190	0.0003046	0.0002419	0		
57447041451	574470	4145190	0.0003144	0.0002497	0		
57448041451	574480	4145190	0.0003128	0.0002484	0		
57449041451	574490	4145190	0.0002967	0.0002356	0		
57450041451	574500	4145190	0.0002703	0.0002146	0		
57451041451	574510	4145190	0.0002435	0.0001934	0		
57452041451	574520	4145190	0.0002174	0.0001726	0		
57444041452	574440	4145200	0.0001881	0.0001494	0		
57445041452	574450	4145200	0.0001615	0.0001283	0		
57446041452	574460	4145200	0.0001386	0.00011	0		
57447041452	574470	4145200	0.0001197	9.503E-05	0		
57448041452	574480	4145200	0.0001948	0.0001547	0		
57449041452	574490	4145200	0.0002258	0.0001793	0		
57450041452	574500	4145200	0.0002687	0.0002134	0		
57451041452	574510	4145200	0.0003199	0.000254	0		
57443041452	574430	4145210	0.0003735	0.0002966	0		
57444041452	574440	4145210	0.0004161	0.0003304	0		
57445041452	574450	4145210	0.0004205	0.000334	0		
57446041452	574460	4145210	0.000442	0.000351	0		
57447041452	574470	4145210	0.0004476	0.0003554	0		
57448041452	574480	4145210	0.0004448	0.0003532	0		
57449041452	574490	4145210	0.0004288	0.0003405	0		
57450041452	574500	4145210	0.0003889	0.0003088	0		
57451041452	574510	4145210	0.0003375	0.000268	0		
57443041452	574430	4145220	0.0002889	0.0002294	0		
57444041452	574440	4145220	0.0002368	0.000188	0		
57445041452	574450	4145220	0.0001941	0.0001541	0		
57446041452	574460	4145220	0.0001609	0.0001278	0		
57447041452	574470	4145220	0.0001353	0.0001074	0		
57448041452	574480	4145220	0.0002253	0.0001789	0		
57449041452	574490	4145220	0.0002737	0.0002173	0		
57450041452	574500	4145220	0.0003456	0.0002745	0		
57451041452	574510	4145220	0.0004484	0.0003561	0		
57452041452	574520	4145220	0.0005521	0.0004385	0		
57453041452	574530	4145220	0.0006213	0.0004934	0		
57444041452	574440	4145230	0.0006911	0.0005488	0		
57445041452	574450	4145230	0.000744	0.0005908	0		

Garvey Reservoir Rehab - Mitigated Misc. Site Upgrades

Cancer Risk Summary & Maximum Annual GLC for Chronic Calculations

Cancer Risk Summary

Max Risk: 0.230246

XY	X	Y	Offroad Risk	Haul Risk	Total Risk
7446041452	574460	4145230	0.026274794	0	0.026275
7447041452	574470	4145230	0.025087077	0	0.025087
7448041452	574480	4145230	0.024384371	0	0.024384
7449041452	574490	4145230	0.023199511	0	0.0232
7450041452	574500	4145230	0.018791629	0	0.018792
7451041452	574510	4145230	0.014600859	0	0.014601
7452041452	574520	4145230	0.010806979	0	0.010807
7444041452	574440	4145240	0.008259316	0	0.008259
7445041452	574450	4145240	0.006539467	0	0.006539
7446041452	574460	4145240	0.005324613	0	0.005325
7447041452	574470	4145240	0.008961794	0	0.008962
7448041452	574480	4145240	0.011895882	0	0.011896
7449041452	574490	4145240	0.015865428	0	0.015865
7450041452	574500	4145240	0.022376725	0	0.022377
7451041452	574510	4145240	0.032164289	0	0.032164
7445041452	574450	4145250	0.04818441	0	0.048184
7446041452	574460	4145250	0.059012124	0	0.059012
7447041452	574470	4145250	0.06270512	0	0.062705
7448041452	574480	4145250	0.05850946	0	0.058509
7446041452	574460	4145260	0.048972647	0	0.048973
7447041452	574470	4145260	0.052594741	0	0.052595
7448041452	574480	4145260	0.057428891	0	0.057429
7447041452	574470	4145270	0.043535682	0	0.043536
7449041451	574490	4145130	0.024388703	0	0.024389
7448041451	574480	4145140	0.014441888	0	0.014442
7449041451	574490	4145140	0.010048798	0	0.010049
7449041451	574490	4145150	0.007536946	0	0.007537
7450041451	574500	4145150	0.005946917	0	0.005947
7446041451	574460	4145160	0.009904378	0	0.009904
7449041451	574490	4145160	0.013744045	0	0.013744
7450041451	574500	4145160	0.020806101	0	0.020806
7451041451	574510	4145160	0.035626839	0	0.035627
7446041451	574460	4145170	0.067731178	0	0.067731
7447041451	574470	4145170	0.043920795	0	0.043921
7448041451	574480	4145170	0.01925777	0	0.019258
7449041451	574490	4145170	0.011928711	0	0.011929
7450041451	574500	4145170	0.008498174	0	0.008498
7451041451	574510	4145170	0.006607238	0	0.006607
7452041451	574520	4145170	0.010544734	0	0.010545
7446041451	574460	4145180	0.015298969	0	0.015299
7447041451	574470	4145180	0.025181084	0	0.025181
7448041451	574480	4145180	0.059510369	0	0.05951
7449041451	574490	4145180	0.049984467	0	0.049984
7450041451	574500	4145180	0.02380015	0	0.0238
7451041451	574510	4145180	0.014048371	0	0.014048
7452041451	574520	4145180	0.00986689	0	0.009867
7453041451	574530	4145180	0.007206607	0	0.007207
7445041451	574450	4145190	0.010914294	0	0.010914
7446041451	574460	4145190	0.016083487	0	0.016083
7447041451	574470	4145190	0.027322962	0	0.027323
7448041451	574480	4145190	0.066961151	0	0.066961
7449041451	574490	4145190	0.066567787	0	0.066568
7450041451	574500	4145190	0.028241425	0	0.028241
7451041451	574510	4145190	0.016477598	0	0.016478
7452041451	574520	4145190	0.011022855	0	0.011023
7444041452	574440	4145200	0.007941475	0	0.007941
7445041452	574450	4145200	0.010729002	0	0.010729
7446041452	574460	4145200	0.015974633	0	0.015975
7447041452	574470	4145200	0.027244684	0	0.027245
7448041452	574480	4145200	0.062252751	0	0.062253
7449041452	574490	4145200	0.062496377	0	0.062496
7450041452	574500	4145200	0.029429535	0	0.02943

Max GLC for Chronic Calcs

Max GLC: 0.006567

XY	X	Y	2025	2026	2027	2034	2035
57446041452	574460	4145230	0.0007494	0.0005951	0		
57447041452	574470	4145230	0.0007155	0.0005682	0		
57448041452	574480	4145230	0.0006955	0.0005523	0		
57449041452	574490	4145230	0.0006617	0.0005255	0		
57450041452	574500	4145230	0.000536	0.0004256	0		
57451041452	574510	4145230	0.0004164	0.0003307	0		
57452041452	574520	4145230	0.0003082	0.0002448	0		
57444041452	574440	4145240	0.0002356	0.0001871	0		
57445041452	574450	4145240	0.0001865	0.0001481	0		
57446041452	574460	4145240	0.0001519	0.0001206	0		
57447041452	574470	4145240	0.0002556	0.000203	0		
57448041452	574480	4145240	0.0003393	0.0002694	0		
57449041452	574490	4145240	0.0004525	0.0003593	0		
57450041452	574500	4145240	0.0006382	0.0005068	0		
57451041452	574510	4145240	0.0009174	0.0007285	0		
57445041452	574450	4145250	0.0013743	0.0010913	0		
57446041452	574460	4145250	0.0016831	0.0013366	0		
57447041452	574470	4145250	0.0017884	0.0014202	0		
57448041452	574480	4145250	0.0016688	0.0013252	0		
57446041452	574460	4145260	0.0013968	0.0011092	0		
57447041452	574470	4145260	0.0015001	0.0011912	0		
57448041452	574480	4145260	0.0016379	0.0013007	0		
57447041452	574470	4145270	0.0012417	0.000986	0		
57449041451	574490	4145130	0.0006956	0.0005524	0		
57448041451	574480	4145140	0.0004119	0.0003271	0		
57449041451	574490	4145140	0.0002866	0.0002276	0		
57449041451	574490	4145150	0.000215	0.0001707	0		
57450041451	574500	4145150	0.0001696	0.0001347	0		
57446041451	574460	4145160	0.0002825	0.0002243	0		
57449041451	574490	4145160	0.000392	0.0003113	0		
57450041451	574500	4145160	0.0005934	0.0004712	0		
57451041451	574510	4145160	0.0010161	0.0008069	0		
57446041451	574460	4145170	0.0019318	0.0015341	0		
57447041451	574470	4145170	0.0012527	0.0009948	0		
57448041451	574480	4145170	0.0005493	0.0004362	0		
57449041451	574490	4145170	0.0003402	0.0002702	0		
57450041451	574500	4145170	0.0002424	0.0001925	0		
57451041451	574510	4145170	0.0001884	0.0001496	0		
57452041451	574520	4145170	0.0003007	0.0002388	0		
57446041451	574460	4145180	0.0004363	0.0003465	0		
57447041451	574470	4145180	0.0007182	0.0005703	0		
57448041451	574480	4145180	0.0016973	0.0013479	0		
57449041451	574490	4145180	0.0014256	0.0011321	0		
57450041451	574500	4145180	0.0006788	0.0005391	0		
57451041451	574510	4145180	0.0004007	0.0003182	0		
57452041451	574520	4145180	0.0002814	0.0002235	0		
57453041451	574530	4145180	0.0002055	0.0001632	0		
57445041451	574450	4145190	0.0003113	0.0002472	0		
57446041451	574460	4145190	0.0004587	0.0003643	0		
57447041451	574470	4145190	0.0007793	0.0006188	0		
57448041451	574480	4145190	0.0019098	0.0015166	0		
57449041451	574490	4145190	0.0018986	0.0015077	0		
57450041451	574500	4145190	0.0008055	0.0006396	0		
57451041451	574510	4145190	0.00047	0.0003732	0		
57452041451	574520	4145190	0.0003144	0.0002497	0		
57444041452	574440	4145200	0.0002265	0.0001799	0		
57445041452	574450	4145200	0.000306	0.000243	0		
57446041452	574460	4145200	0.0004556	0.0003618	0		
57447041452	574470	4145200	0.0007771	0.0006171	0		
57448041452	574480	4145200	0.0017755	0.00141	0		
57449041452	574490	4145200	0.0017825	0.0014155	0		
57450041452	574500	4145200	0.0008394	0.0006666	0		

Garvey Reservoir Rehab - Mitigated Misc. Site Upgrades

Cancer Risk Summary & Maximum Annual GLC for Chronic Calculations

Cancer Risk Summary

Max Risk: 0.230246

XY	X	Y	Offroad Risk	Haul Risk	Total Risk
7451041452(	574510	4145200	0.017419191	0	0.017419
7443041452:	574430	4145210	0.011880043	0	0.01188
7444041452:	574440	4145210	0.008437869	0	0.008438
7445041452:	574450	4145210	0.010087774	0	0.010088
7446041452:	574460	4145210	0.015016138	0	0.015016
7447041452:	574470	4145210	0.024794198	0	0.024794
7448041452:	574480	4145210	0.052450299	0	0.05245
7449041452:	574490	4145210	0.077424432	0	0.077424
7450041452:	574500	4145210	0.046260912	0	0.046261
7451041452:	574510	4145210	0.027746341	0	0.027746
7443041452:	574430	4145220	0.017427361	0	0.017427
7444041452:	574440	4145220	0.012005861	0	0.012006
7445041452:	574450	4145220	0.008959416	0	0.008959
7446041452:	574460	4145220	0.009185843	0	0.009186
7447041452:	574470	4145220	0.013538253	0	0.013538
7448041452:	574480	4145220	0.02116076	0	0.021161
7449041452:	574490	4145220	0.039143794	0	0.039144
7450041452:	574500	4145220	0.058099036	0	0.058099
7451041452:	574510	4145220	0.045868841	0	0.045869
7452041452:	574520	4145220	0.034225517	0	0.034226
7453041452:	574530	4145220	0.024304725	0	0.024305
7444041452:	574440	4145230	0.017066967	0	0.017067
7445041452:	574450	4145230	0.012264196	0	0.012264
7446041452:	574460	4145230	0.009361689	0	0.009362
7447041452:	574470	4145230	0.008341239	0	0.008341
7448041452:	574480	4145230	0.011714962	0	0.011715
7449041452:	574490	4145230	0.017246676	0	0.017247
7450041452:	574500	4145230	0.028360605	0	0.028361
7451041452:	574510	4145230	0.044990448	0	0.04499
7452041452:	574520	4145230	0.039310584	0	0.039311
7444041452	574440	4145240	0.032999443	0	0.032999
7445041452	574450	4145240	0.026403977	0	0.026404
7446041452	574460	4145240	0.020190942	0	0.020191
7447041452	574470	4145240	0.015239447	0	0.015239
7448041452	574480	4145240	0.011881075	0	0.011881
7449041452	574490	4145240	0.009173562	0	0.009174
7450041452	574500	4145240	0.007796851	0	0.007797
7451041452	574510	4145240	0.009806658	0	0.009807
7445041452	574450	4145250	0.013666801	0	0.013667
7446041452	574460	4145250	0.020924129	0	0.020924
7447041452	574470	4145250	0.033558659	0	0.033559
7448041452	574480	4145250	0.153218911	0	0.153219
7446041452(	574460	4145260	0.095465365	0	0.095465
7447041452(	574470	4145260	0.047601184	0	0.047601
7448041452(	574480	4145260	0.035150354	0	0.03515
7447041452:	574470	4145270	0.029272193	0	0.029272
7449041451:	574490	4145130	0.02535101	0	0.025351
7448041451	574480	4145140	0.020928474	0	0.020928
7449041451	574490	4145140	0.017180938	0	0.017181
7449041451	574490	4145150	0.013718424	0	0.013718
7450041451	574500	4145150	0.010818559	0	0.010819
7446041451(	574460	4145160	0.008701294	0	0.008701
7449041451(	574490	4145160	0.006917518	0	0.006918
7450041451(	574500	4145160	0.008802091	0	0.008802
7451041451(	574510	4145160	0.011250243	0	0.01125
7446041451:	574460	4145170	0.015797522	0	0.015798
7447041451:	574470	4145170	0.022339	0	0.022339
7448041451:	574480	4145170	0.031822621	0	0.031823
7449041451:	574490	4145170	0.042224378	0	0.042224
7450041451:	574500	4145170	0.050137768	0	0.050138
7451041451:	574510	4145170	0.046062593	0	0.046063
7452041451:	574520	4145170	0.035481591	0	0.035482

Max GLC for Chronic Calcs

Max GLC: 0.006567

XY	X	Y	2025	2026	2027	2034	2035
57451041452(	574510	4145200	0.0004968	0.0003945	0		
57443041452:	574430	4145210	0.0003388	0.0002691	0		
57444041452:	574440	4145210	0.0002407	0.0001911	0		
57445041452:	574450	4145210	0.0002877	0.0002285	0		
57446041452:	574460	4145210	0.0004283	0.0003401	0		
57447041452:	574470	4145210	0.0007072	0.0005616	0		
57448041452:	574480	4145210	0.0014959	0.001188	0		
57449041452:	574490	4145210	0.0022082	0.0017536	0		
57450041452:	574500	4145210	0.0013194	0.0010478	0		
57451041452:	574510	4145210	0.0007914	0.0006284	0		
57443041452:	574430	4145220	0.000497	0.0003947	0		
57444041452:	574440	4145220	0.0003424	0.0002719	0		
57445041452:	574450	4145220	0.0002555	0.0002029	0		
57446041452:	574460	4145220	0.000262	0.0002081	0		
57447041452:	574470	4145220	0.0003861	0.0003066	0		
57448041452:	574480	4145220	0.0006035	0.0004793	0		
57449041452:	574490	4145220	0.0011164	0.0008866	0		
57450041452:	574500	4145220	0.0016571	0.0013159	0		
57451041452:	574510	4145220	0.0013082	0.0010389	0		
57452041452:	574520	4145220	0.0009762	0.0007752	0		
57453041452:	574530	4145220	0.0006932	0.0005505	0		
57444041452:	574440	4145230	0.0004868	0.0003866	0		
57445041452:	574450	4145230	0.0003498	0.0002778	0		
57446041452:	574460	4145230	0.000267	0.000212	0		
57447041452:	574470	4145230	0.0002379	0.0001889	0		
57448041452:	574480	4145230	0.0003341	0.0002653	0		
57449041452:	574490	4145230	0.0004919	0.0003906	0		
57450041452:	574500	4145230	0.0008089	0.0006423	0		
57451041452:	574510	4145230	0.0012832	0.001019	0		
57452041452:	574520	4145230	0.0011212	0.0008904	0		
57444041452	574440	4145240	0.0009412	0.0007474	0		
57445041452	574450	4145240	0.0007531	0.000598	0		
57446041452	574460	4145240	0.0005759	0.0004573	0		
57447041452	574470	4145240	0.0004346	0.0003452	0		
57448041452	574480	4145240	0.0003389	0.0002691	0		
57449041452	574490	4145240	0.0002616	0.0002078	0		
57450041452	574500	4145240	0.0002224	0.0001766	0		
57451041452	574510	4145240	0.0002797	0.0002221	0		
57445041452	574450	4145250	0.0003898	0.0003095	0		
57446041452	574460	4145250	0.0005968	0.0004739	0		
57447041452	574470	4145250	0.0009571	0.0007601	0		
57448041452	574480	4145250	0.00437	0.0034703	0		
57446041452(	574460	4145260	0.0027228	0.0021622	0		
57447041452(	574470	4145260	0.0013576	0.0010781	0		
57448041452(	574480	4145260	0.0010025	0.0007961	0		
57447041452:	574470	4145270	0.0008349	0.000663	0		
57449041451:	574490	4145130	0.000723	0.0005742	0		
57448041451	574480	4145140	0.0005969	0.000474	0		
57449041451	574490	4145140	0.00049	0.0003891	0		
57449041451	574490	4145150	0.0003913	0.0003107	0		
57450041451	574500	4145150	0.0003086	0.000245	0		
57446041451(	574460	4145160	0.0002482	0.0001971	0		
57449041451(	574490	4145160	0.0001973	0.0001567	0		
57450041451(	574500	4145160	0.000251	0.0001994	0		
57451041451(	574510	4145160	0.0003209	0.0002548	0		
57446041451:	574460	4145170	0.0004506	0.0003578	0		
57447041451:	574470	4145170	0.0006371	0.000506	0		
57448041451:	574480	4145170	0.0009076	0.0007208	0		
57449041451:	574490	4145170	0.0012043	0.0009563	0		
57450041451:	574500	4145170	0.00143	0.0011356	0		
57451041451:	574510	4145170	0.0013138	0.0010433	0		
57452041451:	574520	4145170	0.001012	0.0008036	0		

Garvey Reservoir Rehab - Mitigated Misc. Site Upgrades

Cancer Risk Summary & Maximum Annual GLC for Chronic Calculations

Cancer Risk Summary

Max Risk: 0.230246

XY	X	Y	Offroad Risk	Haul Risk	Total Risk
7446041451	574460	4145180	0.027774556	0	0.027775
7447041451	574470	4145180	0.020486115	0	0.020486
7448041451	574480	4145180	0.017518384	0	0.017518
7449041451	574490	4145180	0.01471803	0	0.014718
7450041451	574500	4145180	0.012202183	0	0.012202
7451041451	574510	4145180	0.009953874	0	0.009954
7452041451	574520	4145180	0.008206561	0	0.008207
7453041451	574530	4145180	0.006163271	0	0.006163
7445041451	574450	4145190	0.007578245	0	0.007578
7446041451	574460	4145190	0.009366502	0	0.009367
7447041451	574470	4145190	0.012277691	0	0.012278
7448041451	574480	4145190	0.016011876	0	0.016012
7449041451	574490	4145190	0.020624351	0	0.020624
7450041451	574500	4145190	0.025454395	0	0.025454
7451041451	574510	4145190	0.028756021	0	0.028756
7452041451	574520	4145190	0.028502417	0	0.028502
7444041452	574440	4145200	0.025443716	0	0.025444
7445041452	574450	4145200	0.021762884	0	0.021763
7446041452	574460	4145200	0.019176798	0	0.019177
7447041452	574470	4145200	0.016786245	0	0.016786
7448041452	574480	4145200	0.014557047	0	0.014557
7449041452	574490	4145200	0.01251876	0	0.012519
7450041452	574500	4145200	0.010666065	0	0.010666
7451041452	574510	4145200	0.00900664	0	0.009007
7443041452	574430	4145210	0.007623175	0	0.007623
7444041452	574440	4145210	0.005456919	0	0.005457
7445041452	574450	4145210	0.006574915	0	0.006575
7446041452	574460	4145210	0.007976768	0	0.007977
7447041452	574470	4145210	0.009843516	0	0.009844
7448041452	574480	4145210	0.012263249	0	0.012263
7449041452	574490	4145210	0.014849796	0	0.01485
7450041452	574500	4145210	0.017564188	0	0.017564
7451041452	574510	4145210	0.020005156	0	0.020005
7443041452	574430	4145220	0.020358183	0	0.020358
7444041452	574440	4145220	0.018976305	0	0.018976
7445041452	574450	4145220	0.017206937	0	0.017207
7446041452	574460	4145220	0.015595784	0	0.015596
7447041452	574470	4145220	0.013876902	0	0.013877
7448041452	574480	4145220	0.012319578	0	0.01232
7449041452	574490	4145220	0.010834511	0	0.010835
7450041452	574500	4145220	0.009371003	0	0.009371
7451041452	574510	4145220	0.008098604	0	0.008099
7452041452	574520	4145220	0.007024594	0	0.007025
7453041452	574530	4145220	0.017333574	0	0.017334
7444041452	574440	4145230	0.020133296	0	0.020133
7445041452	574450	4145230	0.022919258	0	0.022919
7446041452	574460	4145230	0.026945124	0	0.026945
7447041452	574470	4145230	0.029671966	0	0.029672
7448041452	574480	4145230	0.033162066	0	0.033162
7449041452	574490	4145230	0.037967936	0	0.037968
7450041452	574500	4145230	0.038150231	0	0.03815
7451041452	574510	4145230	0.040234827	0	0.040235
7452041452	574520	4145230	0.041519015	0	0.041519
7444041452	574440	4145240	0.041020165	0	0.04102
7445041452	574450	4145240	0.039669968	0	0.03967
7446041452	574460	4145240	0.037814548	0	0.037815
7447041452	574470	4145240	0.036573853	0	0.036574
7448041452	574480	4145240	0.036465989	0	0.036466
7449041452	574490	4145240	0.036955301	0	0.036955
7450041452	574500	4145240	0.037002678	0	0.037003
7451041452	574510	4145240	0.036864813	0	0.036865
7445041452	574450	4145250	0.033196865	0	0.033197

Max GLC for Chronic Calcs

Max GLC: 0.006567

XY	X	Y	2025	2026	2027	2034	2035
574460414518	574460	4145180	0.0007922	0.0006291	0		
574470414518	574470	4145180	0.0005843	0.000464	0		
574480414518	574480	4145180	0.0004996	0.0003968	0		
574490414518	574490	4145180	0.0004198	0.0003334	0		
574500414518	574500	4145180	0.000348	0.0002764	0		
574510414518	574510	4145180	0.0002839	0.0002254	0		
574520414518	574520	4145180	0.0002341	0.0001859	0		
574530414518	574530	4145180	0.0001758	0.0001396	0		
574450414519	574450	4145190	0.0002161	0.0001716	0		
574460414519	574460	4145190	0.0002671	0.0002121	0		
574470414519	574470	4145190	0.0003502	0.0002781	0		
574480414519	574480	4145190	0.0004567	0.0003627	0		
574490414519	574490	4145190	0.0005882	0.0004671	0		
574500414519	574500	4145190	0.000726	0.0005765	0		
574510414519	574510	4145190	0.0008202	0.0006513	0		
574520414519	574520	4145190	0.0008129	0.0006456	0		
574440414520	574440	4145200	0.0007257	0.0005763	0		
574450414520	574450	4145200	0.0006207	0.0004929	0		
574460414520	574460	4145200	0.0005469	0.0004343	0		
574470414520	574470	4145200	0.0004788	0.0003802	0		
574480414520	574480	4145200	0.0004152	0.0003297	0		
574490414520	574490	4145200	0.0003571	0.0002835	0		
574500414520	574500	4145200	0.0003042	0.0002416	0		
574510414520	574510	4145200	0.0002569	0.000204	0		
574430414521	574430	4145210	0.0002174	0.0001727	0		
574440414521	574440	4145210	0.0001556	0.0001236	0		
574450414521	574450	4145210	0.0001875	0.0001489	0		
574460414521	574460	4145210	0.0002275	0.0001807	0		
574470414521	574470	4145210	0.0002807	0.0002229	0		
574480414521	574480	4145210	0.0003498	0.0002778	0		
574490414521	574490	4145210	0.0004235	0.0003363	0		
574500414521	574500	4145210	0.000501	0.0003978	0		
574510414521	574510	4145210	0.0005706	0.0004531	0		
574430414522	574430	4145220	0.0005806	0.0004611	0		
574440414522	574440	4145220	0.0005412	0.0004298	0		
574450414522	574450	4145220	0.0004908	0.0003897	0		
574460414522	574460	4145220	0.0004448	0.0003532	0		
574470414522	574470	4145220	0.0003958	0.0003143	0		
574480414522	574480	4145220	0.0003514	0.000279	0		
574490414522	574490	4145220	0.000309	0.0002454	0		
574500414522	574500	4145220	0.0002673	0.0002122	0		
574510414522	574510	4145220	0.000231	0.0001834	0		
574520414522	574520	4145220	0.0002003	0.0001591	0		
574530414522	574530	4145220	0.0004944	0.0003926	0		
574440414523	574440	4145230	0.0005742	0.000456	0		
574450414523	574450	4145230	0.0006537	0.0005191	0		
574460414523	574460	4145230	0.0007685	0.0006103	0		
574470414523	574470	4145230	0.0008463	0.000672	0		
574480414523	574480	4145230	0.0009458	0.0007511	0		
574490414523	574490	4145230	0.0010829	0.0008599	0		
574500414523	574500	4145230	0.0010881	0.0008641	0		
574510414523	574510	4145230	0.0011475	0.0009113	0		
574520414523	574520	4145230	0.0011842	0.0009404	0		
574440414524	574440	4145240	0.0011699	0.0009291	0		
574450414524	574450	4145240	0.0011314	0.0008985	0		
574460414524	574460	4145240	0.0010785	0.0008565	0		
574470414524	574470	4145240	0.0010431	0.0008284	0		
574480414524	574480	4145240	0.0010401	0.0008259	0		
574490414524	574490	4145240	0.001054	0.000837	0		
574500414524	574500	4145240	0.0010554	0.0008381	0		
574510414524	574510	4145240	0.0010514	0.000835	0		
574450414525	574450	4145250	0.0009468	0.0007519	0		

Garvey Reservoir Rehab - Mitigated Misc. Site Upgrades

Cancer Risk Summary & Maximum Annual GLC for Chronic Calculations

Cancer Risk Summary

Max Risk: 0.230246

XY	X	Y	Offroad Risk	Haul Risk	Total Risk
7446041452	574460	4145250	0.027958641	0	0.027959
7447041452	574470	4145250	0.022830471	0	0.02283
7448041452	574480	4145250	0.018796539	0	0.018797
7446041452	574460	4145260	0.015137747	0	0.015138
7447041452	574470	4145260	0.020428007	0	0.020428
7448041452	574480	4145260	0.024206013	0	0.024206
7447041452	574470	4145270	0.029256253	0	0.029256
7449041451	574490	4145130	0.035690745	0	0.035691
7448041451	574480	4145140	0.045891517	0	0.045892
7449041451	574490	4145140	0.058832333	0	0.058832
7449041451	574490	4145150	0.069089685	0	0.06909
7450041451	574500	4145150	0.070161415	0	0.070161
7446041451	574460	4145160	0.07354422	0	0.073544
7449041451	574490	4145160	0.073845703	0	0.073846
7450041451	574500	4145160	0.07149858	0	0.071499
7451041451	574510	4145160	0.066912478	0	0.066912
7446041451	574460	4145170	0.057987085	0	0.057987
7447041451	574470	4145170	0.053959419	0	0.053959
7448041451	574480	4145170	0.057318302	0	0.057318
7449041451	574490	4145170	0.060565347	0	0.060565
7450041451	574500	4145170	0.063583799	0	0.063584
7451041451	574510	4145170	0.067645563	0	0.067646
7452041451	574520	4145170	0.063119229	0	0.063119
7446041451	574460	4145180	0.048392153	0	0.048392
7447041451	574470	4145180	0.033880167	0	0.03388
7448041451	574480	4145180	0.024676221	0	0.024676
7449041451	574490	4145180	0.018272167	0	0.018272
7450041451	574500	4145180	0.024377648	0	0.024378
7451041451	574510	4145180	0.030751857	0	0.030752
7452041451	574520	4145180	0.038516339	0	0.038516
7453041451	574530	4145180	0.052803493	0	0.052803
7445041451	574450	4145190	0.092735967	0	0.092736
7446041451	574460	4145190	0.154659106	0	0.154659
7447041451	574470	4145190	0.125294238	0	0.125294
7448041451	574480	4145190	0.185288948	0	0.185289
7449041451	574490	4145190	0.127753454	0	0.127753
7450041451	574500	4145190	0.183555245	0	0.183555
7451041451	574510	4145190	0.126589329	0	0.126589
7452041451	574520	4145190	0.162404196	0	0.162404
7444041452	574440	4145200	0.117564974	0	0.117565
7445041452	574450	4145200	0.083945892	0	0.083946
7446041452	574460	4145200	0.148368095	0	0.148368
7447041452	574470	4145200	0.146388636	0	0.146389
7448041452	574480	4145200	0.155614782	0	0.155615
7449041452	574490	4145200	0.129764887	0	0.129765
7450041452	574500	4145200	0.129181713	0	0.129182
7451041452	574510	4145200	0.119016293	0	0.119016
7443041452	574430	4145210	0.032534745	0	0.032535
7444041452	574440	4145210	0.021999315	0	0.021999
7445041452	574450	4145210	0.029317041	0	0.029317
7446041452	574460	4145210	0.039628847	0	0.039629
7447041452	574470	4145210	0.056510943	0	0.056511
7448041452	574480	4145210	0.084028057	0	0.084028
7449041452	574490	4145210	0.041925299	0	0.041925
7450041452	574500	4145210	0.025961273	0	0.025961
7451041452	574510	4145210	0.034758227	0	0.034758
7443041452	574430	4145220	0.054849739	0	0.05485
7444041452	574440	4145220	0.127819224	0	0.127819
7445041452	574450	4145220	0.044498595	0	0.044499
7446041452	574460	4145220	0.029398332	0	0.029398
7447041452	574470	4145220	0.039551213	0	0.039551
7448041452	574480	4145220	0.070210307	0	0.07021

Max GLC for Chronic Calcs

Max GLC: 0.006567

XY	X	Y	2025	2026	2027	2034	2035
57446041452	574460	4145250	0.0007974	0.0006332	0		
57447041452	574470	4145250	0.0006512	0.0005171	0		
57448041452	574480	4145250	0.0005361	0.0004257	0		
57446041452	574460	4145260	0.0004317	0.0003429	0		
57447041452	574470	4145260	0.0005826	0.0004627	0		
57448041452	574480	4145260	0.0006904	0.0005482	0		
57447041452	574470	4145270	0.0008344	0.0006626	0		
57449041451	574490	4145130	0.0010179	0.0008084	0		
57448041451	574480	4145140	0.0013089	0.0010394	0		
57449041451	574490	4145140	0.001678	0.0013325	0		
57449041451	574490	4145150	0.0019705	0.0015648	0		
57450041451	574500	4145150	0.0020011	0.0015891	0		
57446041451	574460	4145160	0.0020976	0.0016657	0		
57449041451	574490	4145160	0.0021062	0.0016725	0		
57450041451	574500	4145160	0.0020392	0.0016194	0		
57451041451	574510	4145160	0.0019084	0.0015155	0		
57446041451	574460	4145170	0.0016539	0.0013134	0		
57447041451	574470	4145170	0.001539	0.0012221	0		
57448041451	574480	4145170	0.0016348	0.0012982	0		
57449041451	574490	4145170	0.0017274	0.0013718	0		
57450041451	574500	4145170	0.0018135	0.0014401	0		
57451041451	574510	4145170	0.0019293	0.0015321	0		
57452041451	574520	4145170	0.0018002	0.0014296	0		
57446041451	574460	4145180	0.0013802	0.001096	0		
57447041451	574470	4145180	0.0009663	0.0007674	0		
57448041451	574480	4145180	0.0007038	0.0005589	0		
57449041451	574490	4145180	0.0005211	0.0004138	0		
57450041451	574500	4145180	0.0006953	0.0005521	0		
57451041451	574510	4145180	0.0008771	0.0006965	0		
57452041451	574520	4145180	0.0010985	0.0008724	0		
57453041451	574530	4145180	0.001506	0.001196	0		
57445041451	574450	4145190	0.0026449	0.0021004	0		
57446041451	574460	4145190	0.0044111	0.0035029	0		
57447041451	574470	4145190	0.0035735	0.0028378	0		
57448041451	574480	4145190	0.0052847	0.0041966	0		
57449041451	574490	4145190	0.0036437	0.0028935	0		
57450041451	574500	4145190	0.0052352	0.0041574	0		
57451041451	574510	4145190	0.0036105	0.0028671	0		
57452041451	574520	4145190	0.004632	0.0036783	0		
57444041452	574440	4145200	0.0033531	0.0026628	0		
57445041452	574450	4145200	0.0023942	0.0019013	0		
57446041452	574460	4145200	0.0042316	0.0033604	0		
57447041452	574470	4145200	0.0041752	0.0033156	0		
57448041452	574480	4145200	0.0044383	0.0035245	0		
57449041452	574490	4145200	0.0037011	0.0029391	0		
57450041452	574500	4145200	0.0036844	0.0029259	0		
57451041452	574510	4145200	0.0033945	0.0026956	0		
57443041452	574430	4145210	0.0009279	0.0007369	0		
57444041452	574440	4145210	0.0006274	0.0004983	0		
57445041452	574450	4145210	0.0008362	0.000664	0		
57446041452	574460	4145210	0.0011303	0.0008976	0		
57447041452	574470	4145210	0.0016118	0.0012799	0		
57448041452	574480	4145210	0.0023966	0.0019032	0		
57449041452	574490	4145210	0.0011958	0.0009496	0		
57450041452	574500	4145210	0.0007404	0.000588	0		
57451041452	574510	4145210	0.0009913	0.0007872	0		
57443041452	574430	4145220	0.0015644	0.0012423	0		
57444041452	574440	4145220	0.0036456	0.002895	0		
57445041452	574450	4145220	0.0012692	0.0010079	0		
57446041452	574460	4145220	0.0008385	0.0006658	0		
57447041452	574470	4145220	0.001128	0.0008958	0		
57448041452	574480	4145220	0.0020025	0.0015902	0		

Garvey Reservoir Rehab - Mitigated Misc. Site Upgrades

Cancer Risk Summary & Maximum Annual GLC for Chronic Calculations

Cancer Risk Summary

Max Risk: 0.230246

XY	X	Y	Offroad Risk	Haul Risk	Total Risk
7449041452	574490	4145220	0.047322601	0	0.047323
7450041452	574500	4145220	0.032105991	0	0.032106
7451041452	574510	4145220	0.041992512	0	0.041993
7452041452	574520	4145220	0.076533977	0	0.076534
7453041452	574530	4145220	0.05465429	0	0.054654
7444041452	574440	4145230	0.035697381	0	0.035697
7445041452	574450	4145230	0.042588799	0	0.042589
7446041452	574460	4145230	0.074914795	0	0.074915
7447041452	574470	4145230	0.061478135	0	0.061478
7448041452	574480	4145230	0.038226139	0	0.038226
7449041452	574490	4145230	0.043192613	0	0.043193
7450041452	574500	4145230	0.071575136	0	0.071575
7451041452	574510	4145230	0.110258487	0	0.110258
7452041452	574520	4145230	0.061115846	0	0.061116
7444041452	574440	4145240	0.039289117	0	0.039289
7445041452	574450	4145240	0.042050786	0	0.042051
7446041452	574460	4145240	0.068518836	0	0.068519
7447041452	574470	4145240	0.230245948	0	0.230246
7448041452	574480	4145240	0.086826513	0	0.086827
7449041452	574490	4145240	0.05656037	0	0.05656
7450041452	574500	4145240	0.038720016	0	0.03872
7451041452	574510	4145240	0.039694132	0	0.039694
7445041452	574450	4145250	0.063390299	0	0.06339
7446041452	574460	4145250	0.106571416	0	0.106571
7447041452	574470	4145250	0.065572854	0	0.065573
7448041452	574480	4145250	0.046440999	0	0.046441
7446041452	574460	4145260	0.034631134	0	0.034631
7447041452	574470	4145260	0.036072871	0	0.036073
7448041452	574480	4145260	0.055506085	0	0.055506
7447041452	574470	4145270	0.080191477	0	0.080191
7457041450	574570	4145030	0.069111253	0	0.069111
7463041450	574630	4145080	0.056394707	0	0.056395
7461041450	574610	4145090	0.043643952	0	0.043644
7462041450	574620	4145090	0.033453808	0	0.033454
7463041450	574630	4145090	0.032598115	0	0.032598
7464041450	574640	4145090	0.047355468	0	0.047355
7460041451	574600	4145100	0.083089431	0	0.083089
7461041451	574610	4145100	0.069293154	0	0.069293
7462041451	574620	4145100	0.060524926	0	0.060525
7463041451	574630	4145100	0.05272001	0	0.05272
7464041451	574640	4145100	0.045194188	0	0.045194
7465041451	574650	4145100	0.037510768	0	0.037511
7459041451	574590	4145110	0.030670453	0	0.03067
7460041451	574600	4145110	0.028749042	0	0.028749
7461041451	574610	4145110	0.039950424	0	0.03995
7462041451	574620	4145110	0.062002649	0	0.062003
7463041451	574630	4145110	0.060068519	0	0.060069
7464041451	574640	4145110	0.053940546	0	0.053941
7465041451	574650	4145110	0.048413999	0	0.048414
7466041451	574660	4145110	0.042864423	0	0.042864
7460041451	574600	4145120	0.037431736	0	0.037432
7461041451	574610	4145120	0.032150628	0	0.032151
7462041451	574620	4145120	0.027187329	0	0.027187
7463041451	574630	4145120	0.025470416	0	0.02547
7464041451	574640	4145120	0.033794936	0	0.033795
7465041451	574650	4145120	0.047967241	0	0.047967
7466041451	574660	4145120	0.051188981	0	0.051189
7460041451	574600	4145130	0.048305687	0	0.048306
7462041451	574620	4145130	0.044051857	0	0.044052
7463041451	574630	4145130	0.040440295	0	0.04044
7464041451	574640	4145130	0.036559873	0	0.03656
7465041451	574650	4145130	0.032539786	0	0.03254

Max GLC for Chronic Calcs

Max GLC: 0.006567

XY	X	Y	2025	2026	2027	2034	2035
57449041452	574490	4145220	0.0013497	0.0010718	0		
57450041452	574500	4145220	0.0009157	0.0007272	0		
57451041452	574510	4145220	0.0011977	0.0009511	0		
57452041452	574520	4145220	0.0021828	0.0017334	0		
57453041452	574530	4145220	0.0015588	0.0012379	0		
57444041452	574440	4145230	0.0010181	0.0008085	0		
57445041452	574450	4145230	0.0012147	0.0009646	0		
57446041452	574460	4145230	0.0021367	0.0016968	0		
57447041452	574470	4145230	0.0017534	0.0013924	0		
57448041452	574480	4145230	0.0010903	0.0008658	0		
57449041452	574490	4145230	0.0012319	0.0009783	0		
57450041452	574500	4145230	0.0020414	0.0016211	0		
57451041452	574510	4145230	0.0031447	0.0024973	0		
57452041452	574520	4145230	0.0017431	0.0013842	0		
57444041452	574440	4145240	0.0011206	0.0008899	0		
57445041452	574450	4145240	0.0011993	0.0009524	0		
57446041452	574460	4145240	0.0019542	0.0015519	0		
57447041452	574470	4145240	0.0065669	0.0052149	0		
57448041452	574480	4145240	0.0024764	0.0019666	0		
57449041452	574490	4145240	0.0016132	0.001281	0		
57450041452	574500	4145240	0.0011043	0.000877	0		
57451041452	574510	4145240	0.0011321	0.000899	0		
57445041452	574450	4145250	0.001808	0.0014357	0		
57446041452	574460	4145250	0.0030395	0.0024138	0		
57447041452	574470	4145250	0.0018702	0.0014852	0		
57448041452	574480	4145250	0.0013246	0.0010519	0		
57446041452	574460	4145260	0.0009877	0.0007844	0		
57447041452	574470	4145260	0.0010288	0.000817	0		
57448041452	574480	4145260	0.0015831	0.0012572	0		
57447041452	574470	4145270	0.0022872	0.0018163	0		
57457041450	574570	4145030	0.0019711	0.0015653	0		
57463041450	574630	4145080	0.0016084	0.0012773	0		
57461041450	574610	4145090	0.0012448	0.0009885	0		
57462041450	574620	4145090	0.0009541	0.0007577	0		
57463041450	574630	4145090	0.0009297	0.0007383	0		
57464041450	574640	4145090	0.0013506	0.0010726	0		
57460041451	574600	4145100	0.0023698	0.0018819	0		
57461041451	574610	4145100	0.0019763	0.0015694	0		
57462041451	574620	4145100	0.0017262	0.0013708	0		
57463041451	574630	4145100	0.0015036	0.0011941	0		
57464041451	574640	4145100	0.001289	0.0010236	0		
57465041451	574650	4145100	0.0010699	0.0008496	0		
57459041451	574590	4145110	0.0008748	0.0006947	0		
57460041451	574600	4145110	0.00082	0.0006511	0		
57461041451	574610	4145110	0.0011394	0.0009048	0		
57462041451	574620	4145110	0.0017684	0.0014043	0		
57463041451	574630	4145110	0.0017132	0.0013605	0		
57464041451	574640	4145110	0.0015384	0.0012217	0		
57465041451	574650	4145110	0.0013808	0.0010965	0		
57466041451	574660	4145110	0.0012225	0.0009708	0		
57460041451	574600	4145120	0.0010676	0.0008478	0		
57461041451	574610	4145120	0.000917	0.0007282	0		
57462041451	574620	4145120	0.0007754	0.0006158	0		
57463041451	574630	4145120	0.0007264	0.0005769	0		
57464041451	574640	4145120	0.0009639	0.0007654	0		
57465041451	574650	4145120	0.0013681	0.0010864	0		
57466041451	574660	4145120	0.00146	0.0011594	0		
57460041451	574600	4145130	0.0013777	0.0010941	0		
57462041451	574620	4145130	0.0012564	0.0009977	0		
57463041451	574630	4145130	0.0011534	0.0009159	0		
57464041451	574640	4145130	0.0010427	0.0008281	0		
57465041451	574650	4145130	0.0009281	0.000737	0		

Garvey Reservoir Rehab - Mitigated Misc. Site Upgrades

Cancer Risk Summary & Maximum Annual GLC for Chronic Calculations

Cancer Risk Summary

Max Risk: 0.230246

XY	X	Y	Offroad Risk	Haul Risk	Total Risk
7463041451	574630	4145140	0.028224945	0	0.028225
7464041451	574640	4145140	0.02438807	0	0.024388
7459041451	574590	4145150	0.022244213	0	0.022244
7460041451	574600	4145150	0.02858543	0	0.028585
7460041451	574600	4145160	0.038508058	0	0.038508
7461041451	574610	4145160	0.055909022	0	0.055909
7461041451	574610	4145170	0.047490689	0	0.047491
7457041450	574570	4145030	0.042720277	0	0.04272
7463041450	574630	4145080	0.039774954	0	0.039775
7461041450	574610	4145090	0.037335241	0	0.037335
7462041450	574620	4145090	0.034447901	0	0.034448
7463041450	574630	4145090	0.031336692	0	0.031337
7464041450	574640	4145090	0.028232574	0	0.028233
7460041451	574600	4145100	0.025066517	0	0.025067
7461041451	574610	4145100	0.022176441	0	0.022176
7462041451	574620	4145100	0.019479755	0	0.01948
7463041451	574630	4145100	0.024431449	0	0.024431
7464041451	574640	4145100	0.03145258	0	0.031453
7465041451	574650	4145100	0.042543348	0	0.042543
7459041451	574590	4145110	0.066393813	0	0.066394
7460041451	574600	4145110	0.049872875	0	0.049873
7461041451	574610	4145110	0.041842525	0	0.041843
7462041451	574620	4145110	0.037427479	0	0.037427
7463041451	574630	4145110	0.034317662	0	0.034318
7464041451	574640	4145110	0.032474328	0	0.032474
7465041451	574650	4145110	0.02991277	0	0.029913
7466041451	574660	4145110	0.027391684	0	0.027392
7460041451	574600	4145120	0.024843176	0	0.024843
7461041451	574610	4145120	0.022336638	0	0.022337
7462041451	574620	4145120	0.019969953	0	0.01997
7463041451	574630	4145120	0.017069887	0	0.01707
7464041451	574640	4145120	0.02095986	0	0.02096
7465041451	574650	4145120	0.026155978	0	0.026156
7466041451	574660	4145120	0.033213426	0	0.033213
7460041451	574600	4145130	0.042841805	0	0.042842
7462041451	574620	4145130	0.110630714	0	0.110631
7463041451	574630	4145130	0.127517568	0	0.127518
7464041451	574640	4145130	0.107802143	0	0.107802
7465041451	574650	4145130	0.081243712	0	0.081244
7463041451	574630	4145140	0.058173803	0	0.058174
7464041451	574640	4145140	0.044627124	0	0.044627
7459041451	574590	4145150	0.037982014	0	0.037982
7460041451	574600	4145150	0.033622815	0	0.033623
7460041451	574600	4145160	0.030446367	0	0.030446
7461041451	574610	4145160	0.028053471	0	0.028053
7461041451	574610	4145170	0.026451474	0	0.026451
7457041450	574570	4145030	0.024324471	0	0.024324
7463041450	574630	4145080	0.02214585	0	0.022146
7461041450	574610	4145090	0.020075261	0	0.020075
7462041450	574620	4145090	0.01814618	0	0.018146
7463041450	574630	4145090	0.014929442	0	0.014929
7464041450	574640	4145090	0.018092851	0	0.018093
7460041451	574600	4145100	0.021777477	0	0.021777
7461041451	574610	4145100	0.026681076	0	0.026681
7462041451	574620	4145100	0.032851598	0	0.032852
7463041451	574630	4145100	0.040231461	0	0.040231
7464041451	574640	4145100	0.04843642	0	0.048436
7465041451	574650	4145100	0.057080324	0	0.05708
7459041451	574590	4145110	0.065664113	0	0.065664
7460041451	574600	4145110	0.070059646	0	0.07006
7461041451	574610	4145110	0.066380823	0	0.066381
7462041451	574620	4145110	0.057784013	0	0.057784

Max GLC for Chronic Calcs

Max GLC: 0.006567

XY	X	Y	2025	2026	2027	2034	2035
57463041451	574630	4145140	0.000805	0.0006393	0		
57464041451	574640	4145140	0.0006956	0.0005524	0		
57459041451	574590	4145150	0.0006344	0.0005038	0		
57460041451	574600	4145150	0.0008153	0.0006474	0		
57460041451	574600	4145160	0.0010983	0.0008722	0		
57461041451	574610	4145160	0.0015946	0.0012663	0		
57461041451	574610	4145170	0.0013545	0.0010756	0		
57457041450	574570	4145030	0.0012184	0.0009676	0		
57463041450	574630	4145080	0.0011344	0.0009009	0		
57461041450	574610	4145090	0.0010648	0.0008456	0		
57462041450	574620	4145090	0.0009825	0.0007802	0		
57463041450	574630	4145090	0.0008938	0.0007098	0		
57464041450	574640	4145090	0.0008052	0.0006394	0		
57460041451	574600	4145100	0.0007149	0.0005677	0		
57461041451	574610	4145100	0.0006325	0.0005023	0		
57462041451	574620	4145100	0.0005556	0.0004412	0		
57463041451	574630	4145100	0.0006968	0.0005534	0		
57464041451	574640	4145100	0.0008971	0.0007124	0		
57465041451	574650	4145100	0.0012134	0.0009636	0		
57459041451	574590	4145110	0.0018936	0.0015038	0		
57460041451	574600	4145110	0.0014224	0.0011296	0		
57461041451	574610	4145110	0.0011934	0.0009477	0		
57462041451	574620	4145110	0.0010675	0.0008477	0		
57463041451	574630	4145110	0.0009788	0.0007773	0		
57464041451	574640	4145110	0.0009262	0.0007355	0		
57465041451	574650	4145110	0.0008531	0.0006775	0		
57466041451	574660	4145110	0.0007812	0.0006204	0		
57460041451	574600	4145120	0.0007086	0.0005627	0		
57461041451	574610	4145120	0.0006371	0.0005059	0		
57462041451	574620	4145120	0.0005696	0.0004523	0		
57463041451	574630	4145120	0.0004869	0.0003866	0		
57464041451	574640	4145120	0.0005978	0.0004747	0		
57465041451	574650	4145120	0.000746	0.0005924	0		
57466041451	574660	4145120	0.0009473	0.0007523	0		
57460041451	574600	4145130	0.0012219	0.0009703	0		
57462041451	574620	4145130	0.0031553	0.0025057	0		
57463041451	574630	4145130	0.003637	0.0028882	0		
57464041451	574640	4145130	0.0030746	0.0024416	0		
57465041451	574650	4145130	0.0023172	0.0018401	0		
57463041451	574630	4145140	0.0016592	0.0013176	0		
57464041451	574640	4145140	0.0012728	0.0010108	0		
57459041451	574590	4145150	0.0010833	0.0008603	0		
57460041451	574600	4145150	0.000959	0.0007615	0		
57460041451	574600	4145160	0.0008684	0.0006896	0		
57461041451	574610	4145160	0.0008001	0.0006354	0		
57461041451	574610	4145170	0.0007544	0.0005991	0		
57457041450	574570	4145030	0.0006938	0.0005509	0		
57463041450	574630	4145080	0.0006316	0.0005016	0		
57461041450	574610	4145090	0.0005726	0.0004547	0		
57462041450	574620	4145090	0.0005176	0.000411	0		
57463041450	574630	4145090	0.0004258	0.0003381	0		
57464041450	574640	4145090	0.000516	0.0004098	0		
57460041451	574600	4145100	0.0006211	0.0004932	0		
57461041451	574610	4145100	0.000761	0.0006043	0		
57462041451	574620	4145100	0.000937	0.0007441	0		
57463041451	574630	4145100	0.0011474	0.0009112	0		
57464041451	574640	4145100	0.0013815	0.001097	0		
57465041451	574650	4145100	0.001628	0.0012928	0		
57459041451	574590	4145110	0.0018728	0.0014872	0		
57460041451	574600	4145110	0.0019982	0.0015868	0		
57461041451	574610	4145110	0.0018933	0.0015035	0		
57462041451	574620	4145110	0.0016481	0.0013088	0		

Garvey Reservoir Rehab - Mitigated Misc. Site Upgrades

Cancer Risk Summary & Maximum Annual GLC for Chronic Calculations

Cancer Risk Summary

Max Risk: 0.230246

XY	X	Y	Offroad Risk	Haul Risk	Total Risk
7463041451	574630	4145110	0.047283464	0	0.047283
7464041451	574640	4145110	0.038709423	0	0.038709
7465041451	574650	4145110	0.032669482	0	0.032669
7466041451	574660	4145110	0.029893104	0	0.029893
7460041451	574600	4145120	0.027277592	0	0.027278
7461041451	574610	4145120	0.025279341	0	0.025279
7462041451	574620	4145120	0.023629879	0	0.02363
7463041451	574630	4145120	0.021818084	0	0.021818
7464041451	574640	4145120	0.020146409	0	0.020146
7465041451	574650	4145120	0.018220129	0	0.01822
7466041451	574660	4145120	0.01662194	0	0.016622
7460041451	574600	4145130	0.013166031	0	0.013166
7462041451	574620	4145130	0.015752543	0	0.015753
7463041451	574630	4145130	0.018587623	0	0.018588
7464041451	574640	4145130	0.022087666	0	0.022088
7465041451	574650	4145130	0.02619395	0	0.026194
7463041451	574630	4145140	0.030918907	0	0.030919
7464041451	574640	4145140	0.035605787	0	0.035606
7459041451	574590	4145150	0.040242771	0	0.040243
7460041451	574600	4145150	0.044203531	0	0.044204
7460041451	574600	4145160	0.046705801	0	0.046706
7461041451	574610	4145160	0.045914097	0	0.045914
7461041451	574610	4145170	0.042445434	0	0.042445
7457041450	574570	4145030	0.037810058	0	0.03781
7463041450	574630	4145080	0.033435482	0	0.033435
7461041450	574610	4145090	0.028844754	0	0.028845
7462041450	574620	4145090	0.026592275	0	0.026592
7463041450	574630	4145090	0.024615701	0	0.024616
7464041450	574640	4145090	0.022789622	0	0.02279
7460041451	574600	4145100	0.021249588	0	0.02125
7461041451	574610	4145100	0.019791622	0	0.019792
7462041451	574620	4145100	0.018335425	0	0.018335
7463041451	574630	4145100	0.016923192	0	0.016923
7464041451	574640	4145100	0.015548159	0	0.015548
7465041451	574650	4145100	0	0	0
7459041451	574590	4145110	0	0	0
7460041451	574600	4145110	0	0	0
7461041451	574610	4145110	0	0	0
7462041451	574620	4145110	0	0	0
7463041451	574630	4145110	0	0	0
7464041451	574640	4145110	0	0	0
7465041451	574650	4145110	0	0	0
7466041451	574660	4145110	0	0	0
7460041451	574600	4145120	0	0	0
7461041451	574610	4145120	0	0	0
7462041451	574620	4145120	0	0	0
7463041451	574630	4145120	0	0	0
7464041451	574640	4145120	0	0	0
7465041451	574650	4145120	0	0	0
7466041451	574660	4145120	0	0	0
7460041451	574600	4145130	0	0	0
7462041451	574620	4145130	0	0	0
7463041451	574630	4145130	0	0	0
7464041451	574640	4145130	0	0	0
7465041451	574650	4145130	0	0	0
7463041451	574630	4145140	0	0	0
7464041451	574640	4145140	0	0	0
7459041451	574590	4145150	0	0	0
7460041451	574600	4145150	0	0	0
7460041451	574600	4145160	0	0	0
7461041451	574610	4145160	0	0	0
7461041451	574610	4145170	0	0	0

Max GLC for Chronic Calcs

Max GLC: 0.006567

XY	X	Y	2025	2026	2027	2034	2035
57463041451	574630	4145110	0.0013486	0.0010709	0		
57464041451	574640	4145110	0.001104	0.0008767	0		
57465041451	574650	4145110	0.0009318	0.0007399	0		
57466041451	574660	4145110	0.0008526	0.0006771	0		
57460041451	574600	4145120	0.000778	0.0006178	0		
57461041451	574610	4145120	0.000721	0.0005726	0		
57462041451	574620	4145120	0.000674	0.0005352	0		
57463041451	574630	4145120	0.0006223	0.0004942	0		
57464041451	574640	4145120	0.0005746	0.0004563	0		
57465041451	574650	4145120	0.0005197	0.0004127	0		
57466041451	574660	4145120	0.0004741	0.0003765	0		
57460041451	574600	4145130	0.0003755	0.0002982	0		
57462041451	574620	4145130	0.0004493	0.0003568	0		
57463041451	574630	4145130	0.0005301	0.000421	0		
57464041451	574640	4145130	0.00063	0.0005003	0		
57465041451	574650	4145130	0.0007471	0.0005933	0		
57463041451	574630	4145140	0.0008818	0.0007003	0		
57464041451	574640	4145140	0.0010155	0.0008064	0		
57459041451	574590	4145150	0.0011478	0.0009115	0		
57460041451	574600	4145150	0.0012607	0.0010012	0		
57460041451	574600	4145160	0.0013321	0.0010578	0		
57461041451	574610	4145160	0.0013095	0.0010399	0		
57461041451	574610	4145170	0.0012106	0.0009614	0		
57457041450	574570	4145030	0.0010784	0.0008564	0		
57463041450	574630	4145080	0.0009536	0.0007573	0		
57461041450	574610	4145090	0.0008227	0.0006533	0		
57462041450	574620	4145090	0.0007584	0.0006023	0		
57463041450	574630	4145090	0.0007021	0.0005575	0		
57464041450	574640	4145090	0.00065	0.0005162	0		
57460041451	574600	4145100	0.0006061	0.0004813	0		
57461041451	574610	4145100	0.0005645	0.0004483	0		
57462041451	574620	4145100	0.0005229	0.0004153	0		
57463041451	574630	4145100	0.0004827	0.0003833	0		
57464041451	574640	4145100	0.0004435	0.0003522	0		
57465041451	574650	4145100	0	0	0		
57459041451	574590	4145110	0	0	0		
57460041451	574600	4145110	0	0	0		
57461041451	574610	4145110	0	0	0		
57462041451	574620	4145110	0	0	0		
57463041451	574630	4145110	0	0	0		
57464041451	574640	4145110	0	0	0		
57465041451	574650	4145110	0	0	0		
57466041451	574660	4145110	0	0	0		
57460041451	574600	4145120	0	0	0		
57461041451	574610	4145120	0	0	0		
57462041451	574620	4145120	0	0	0		
57463041451	574630	4145120	0	0	0		
57464041451	574640	4145120	0	0	0		
57465041451	574650	4145120	0	0	0		
57466041451	574660	4145120	0	0	0		
57460041451	574600	4145130	0	0	0		
57462041451	574620	4145130	0	0	0		
57463041451	574630	4145130	0	0	0		
57464041451	574640	4145130	0	0	0		
57465041451	574650	4145130	0	0	0		
57463041451	574630	4145140	0	0	0		
57464041451	574640	4145140	0	0	0		
57459041451	574590	4145150	0	0	0		
57460041451	574600	4145150	0	0	0		
57460041451	574600	4145160	0	0	0		
57461041451	574610	4145160	0	0	0		
57461041451	574610	4145170	0	0	0		

Garvey Reservoir Rehab - Mitigated Misc. Site Upgrades

Construction Modeling Assumptions

AERMOD Sources

Volume Sources		
Offroad Construction Exhaust		
Release Height	3.66	m
Emissions rate	1	g/s
Init Vert Dimension	3.4	m
Line Volume		
Onroad Hauling Exhaust		
Plume Height	7.315	m
Plume Width	20	m
Release Height	3.66	m
Emissions rate	1	g/s

Meteorology:

SCAQMD	Pico	Rivera	2010 - 2012, 2015 - 2016

SCAQMD Met Data

https://www.aqmd.gov/home/air-quality/meteorological-data/data-for-aermod

AERMOD Sources

Garvey Reservoir Rehab - Mitigated Misc. Site Upgrades

Health Risk Assessment Risk Factors

Residential Risk	Abbreviation	UOM	3rd Trimester	0<2	2<16	16<30
Daily Breathing Rate (95th %'ile)	DBR	L/kg-day	361	1090	572	261
Fraction Of Time At Home [a]	FAH	unitless	1	1	1	0.73
Exposure Frequency	EF	days/year	0.96	0.96	0.96	0.96
Age Sensitivity Factor	ASF	unitless	10	10	3	1
Inhalation Absorption Factor	A	unitless	1	1	1	1
Conversion Factor	CF_1	m^3/L	0.001	0.001	0.001	0.001
Conversion Factor	CF_2	$\mu g/m^3$	0.001	0.001	0.001	0.001
Cancer Potency Factor (diesel exhaust)	CPF	$mg/kg\text{-}day^{-1}$	1.1	1.1	1.1	1.1
Averaging Time (for residential exposure)	AT	years	70.00	70.00	70.00	70.00

[a] assume school or daycare will have cancer risk of >1 per million

Garvey Reservoir Rehab - Mitigated Misc. Site Upgrades

Health Risk Assessment Exposure Duration Assumptions for Offroad Equipment

Residential Receptors

			Start Date	*9/1/2025*	*12/1/2025*
			End Date	*11/30/2025*	*12/1/2027*
	9/1/2025	*11/30/2026*	*Days*	*90*	*730*
Phase	Start Date	End Date	Duration (days)	3rd Tri	0<2
Demolition - 2025	9/1/2025	11/30/2025	91	91	0
Demolition - 2026			1	0	0
Site Preparation - 2025	12/1/2025	12/31/2025	31	0	31
Site Preparation - 2026	1/1/2026	1/31/2026	31	0	31
Grading - 2025	2/1/2026	3/31/2026	59	0	59
Grading - 2026			1	0	0
Infrastructure - 2025	4/1/2026	9/30/2026	183	0	183
Infrastructure - 2026			1	0	0
Paving - 2025	10/1/2026	11/30/2026	61	0	61
Architectural Coating - 2026			1	0	0

Intake Factor for Inhalation, IF (m^3/kg-day)

Phase	Year	Year	Equation	3rd Trimester	0<2
Demolition - 2025		2025		0.012329142	0
Demolition - 2026		1900	$\frac{DBR \cdot FAH \cdot EF \cdot ED \cdot ASF \cdot A \cdot CF_1}{AT}$	0	0
Site Preparation - 2025		2025		0	0.012681554
Site Preparation - 2026		2026		0	0.012681554
Grading - 2025		2026		0	0.02413586
Grading - 2026		1900		0	0
Infrastructure - 2025		2026		0	0.074862075
Infrastructure - 2026		1900		0	0
Paving - 2025		2026		0	0.024954025
Architectural Coating - 2026		1900		0	0

Risk Calculation Part 1, R1

Equation	3rd Trimester	0<2	2<16
	1.35621E-05	0	0
	0	0	0
	0	1.39497E-05	0
$IF \cdot CPF \cdot CF_2$	0	1.39497E-05	0
	0	2.65494E-05	0
	0	0	0
	0	8.23483E-05	0
	0	0	
	0	2.74494E-05	
	0	0	

Exposure Durations

Garvey Reservoir Rehab - Mitigated Misc. Site Upgrades

Offroad DPM Emissions, Ground Level Concentrations and Health Risk Calculations

Residential Receptors

Phase	Year	Emissions (lbs/day) (Misc1)	Work Hours Per Day	Emissions (g/s) (MISC1)	Emissions (lbs/day) (Misc2)	Emissions (g/s) (MISC2)	Emissions (lbs/day) (Misc3)	Emissions (g/s) (MISC3)	Emissions (lbs/day) (Misc4)	Emissions (g/s) (MISC4)	Emissions (lbs/day) (Misc5)	Emissions (g/s) (MISC5)	Emissions (lbs/day) (Misc6)	Emissions (g/s) (MISC6)	Emissions (lbs/day) (Misc7)	Emissions (g/s) (MISC7)
Demolition - 2025	2025	0.017	10	0.00021046	0.057931789	0.000729924	0.038158127	0.000480782	0.016451527	0.000207285	0.009001591	0.000113418	0.011753459	0.00014809	0.008159	0.000103
Demolition - 2026	1900		10	0		0		0		0		0		0		0
Site Preparation - 2025	2025	0.002	10	2.80613E-05	0.007724239	9.73233E-05	0.00508775	6.41042E-05	0.002193537	2.7638E-05	0.001200212	1.51223E-05	0.001567128	1.97454E-05	0.001088	1.37E-05
Site Preparation - 2026	2026	0.002	10	2.80613E-05	0.007724239	9.73233E-05	0.00508775	6.41042E-05	0.002193537	2.7638E-05	0.001200212	1.51223E-05	0.001567128	1.97454E-05	0.001088	1.37E-05
Grading - 2025	2026	0.008	10	9.82144E-05	0.027034835	0.000340631	0.017807126	0.000224365	0.007677379	9.67328E-05	0.004200743	5.29282E-05	0.005484948	6.91088E-05	0.003808	4.8E-05
Grading - 2026	1900		10	0		0		0		0		0		0		0
Infrastructure - 2025	2026	0.001	10	7.01532E-06	0.00193106	2.43308E-05	0.001271938	1.60261E-05	0.000548384	6.90949E-06	0.000300053	3.78059E-06	0.000391782	4.93634E-06	0.000272	3.43E-06
Infrastructure - 2026	1900		10	0		0		0		0		0		0		0
Paving - 2025	2026	0.004	10	5.61225E-05	0.015448477	0.000194647	0.010175501	0.000128208	0.004387074	5.52759E-05	0.002400424	3.02447E-05	0.003134256	3.94908E-05	0.002176	2.74E-05
Architectural Coating - 2026	1900		10	0		0		0		0		0		0		0

AERMOD Column Identifier:	*4*	*4*	*4*	*4*	*4*	*4*	*4*	*4*	*4*	*4*
	5	*5*	*5*	*5*	*5*	*5*	*5*	*5*	*5*	*5*
	6	*6*	*6*	*6*	*6*	*6*	*6*	*6*	*6*	*6*
	7	*7*	*7*	*7*	*7*	*7*	*7*	*7*	*7*	*7*
	8	*8*	*8*	*8*	*8*	*8*	*8*	*8*	*8*	*8*
	9	*9*	*9*	*9*	*9*	*9*	*9*	*9*	*9*	*9*
	10	*10*	*10*	*10*	*10*	*10*	*10*	*10*	*10*	*10*

Garvey Reservoir Rehab - Mitigated Misc. Site Upgrades			Demolition - 2025	Demolition - 2026	Site Preparation - 202	Site Preparation - 202	Grading - 2025	Grading - 2026	Infrastructure - 2025	Infrastructure - 2026	Paving - 2025	Architectural Coating - 2	Child Risk			
Unique Identifier	X (UTM)	Y (UTM)	2025	1900	2025	2026	2026	1900	2026	1900	2026	1900	3rd Trimester	0<2	Total	per million
396166.283767377.2	396166.28	3767377	0.000128954	0	1.71938E-05	1.71938E-05	6.01784E-05	0	4.29846E-06	0	3.43876E-05	0	1.74888E-09	3.37529E-09	5.12417E-09	0.0051242
396266.283767377.2	396266.28	3767377	0.000140781	0	1.87708E-05	1.87708E-05	6.56979E-05	0	4.6927E-06	0	3.75416E-05	0	1.90928E-09	3.68487E-09	5.59415E-09	0.0055942
396366.283767377.2	396366.28	3767377	0.000158476	0	2.11301E-05	2.11301E-05	7.39555E-05	0	5.28253E-06	0	4.22603E-05	0	2.14926E-09	4.14802E-09	6.29728E-09	0.0062973
396466.283767377.2	396466.28	3767377	0.000173136	0	2.30848E-05	2.30848E-05	8.07968E-05	0	5.7712E-06	0	4.61696E-05	0	2.34808E-09	4.53174E-09	6.87982E-09	0.0068798
396566.283767377.2	396566.28	3767377	0.000189479	0	2.52639E-05	2.52639E-05	8.84235E-05	0	6.31596E-06	0	5.05277E-05	0	2.56972E-09	4.95951E-09	7.52923E-09	0.0075292
396666.283767377.2	396666.28	3767377	0.000196957	0	2.6261E-05	2.6261E-05	9.19135E-05	0	6.56525E-06	0	5.2522E-05	0	2.67115E-09	5.15525E-09	7.8264E-09	0.0078264
396766.283767377.2	396766.28	3767377	0.0001979	0	2.63866E-05	2.63866E-05	9.23532E-05	0	6.59666E-06	0	5.27733E-05	0	2.68393E-09	5.17992E-09	7.86385E-09	0.0078638
396866.283767377.2	396866.28	3767377	0.000199792	0	2.6639E-05	2.6639E-05	9.32365E-05	0	6.65975E-06	0	5.3278E-05	0	2.7096E-09	5.22946E-09	7.93906E-09	0.0079391
396966.283767377.2	396966.28	3767377	0.000206051	0	2.74735E-05	2.74735E-05	9.61573E-05	0	6.86838E-06	0	5.4947E-05	0	2.79448E-09	5.39328E-09	8.18776E-09	0.0081878
397066.283767377.2	397066.28	3767377	0.000204091	0	2.72122E-05	2.72122E-05	9.52426E-05	0	6.80304E-06	0	5.44244E-05	0	2.7679E-09	5.34198E-09	8.10988E-09	0.0081099
397166.283767377.2	397166.28	3767377	0.000193871	0	2.58494E-05	2.58494E-05	9.0473E-05	0	6.46236E-06	0	5.16989E-05	0	2.62929E-09	5.07446E-09	7.70375E-09	0.0077037
397266.283767377.2	397266.28	3767377	0.00017814	0	2.3752E-05	2.3752E-05	8.31319E-05	0	5.93799E-06	0	4.75039E-05	0	2.41594E-09	4.66271E-09	7.07865E-09	0.0070787
397366.283767377.2	397366.28	3767377	0.000166343	0	2.21791E-05	2.21791E-05	7.76269E-05	0	5.54478E-06	0	4.43582E-05	0	2.25596E-09	4.35395E-09	6.6099E-09	0.0066099
397466.283767377.2	397466.28	3767377	0.000151753	0	2.02337E-05	2.02337E-05	7.0818E-05	0	5.05843E-06	0	4.04674E-05	0	2.05808E-09	3.97205E-09	6.03013E-09	0.0060301
397566.283767377.2	397566.28	3767377	0.00013573	0	1.80973E-05	1.80973E-05	6.33406E-05	0	4.52433E-06	0	3.61946E-05	0	1.84077E-09	3.55265E-09	5.39343E-09	0.0053934
397666.283767377.2	397666.28	3767377	0.000120356	0	1.60474E-05	1.60474E-05	5.61659E-05	0	4.01185E-06	0	3.20948E-05	0	1.63227E-09	3.15024E-09	4.78251E-09	0.0047825
397766.283767377.2	397766.28	3767377	0.000104546	0	1.39395E-05	1.39395E-05	4.87884E-05	0	3.48488E-06	0	2.78791E-05	0	1.41787E-09	2.73645E-09	4.15431E-09	0.0041543
397866.283767377.2	397866.28	3767377	9.21768E-05	0	1.22902E-05	1.22902E-05	4.30158E-05	0	3.07256E-06	0	2.45805E-05	0	1.25011E-09	2.41268E-09	3.66278E-09	0.0036628
396166.283767477.2	396166.28	3767477	0.00015043	0	2.00574E-05	2.00574E-05	7.02008E-05	0	5.01434E-06	0	4.01147E-05	0	2.04014E-09	3.93743E-09	5.97757E-09	0.0059776
396266.283767477.2	396266.28	3767477	0.000165861	0	2.21148E-05	2.21148E-05	7.74017E-05	0	5.5287E-06	0	4.42296E-05	0	2.24941E-09	4.34132E-09	6.59073E-09	0.0065907
396366.283767477.2	396366.28	3767477	0.000193707	0	2.58276E-05	2.58276E-05	9.03965E-05	0	6.4569E-06	0	5.16552E-05	0	2.62706E-09	5.07017E-09	7.69724E-09	0.0076972
396466.283767477.2	396466.28	3767477	0.000219278	0	2.92371E-05	2.92371E-05	0.00010233	0	7.30928E-06	0	5.84742E-05	0	2.97387E-09	5.73949E-09	8.71336E-09	0.0087134
396566.283767477.2	396566.28	3767477	0.000242204	0	3.22939E-05	3.22939E-05	0.000113029	0	8.07348E-06	0	6.45878E-05	0	3.28479E-09	6.33957E-09	9.62436E-09	0.0096244
396666.283767477.2	396666.28	3767477	0.000257013	0	3.42684E-05	3.42684E-05	0.000119939	0	8.56709E-06	0	6.85367E-05	0	3.48562E-09	6.72717E-09	1.02128E-08	0.0102128
396766.283767477.2	396766.28	3767477	0.000264526	0	3.52701E-05	3.52701E-05	0.000123446	0	8.81754E-06	0	7.05403E-05	0	3.58752E-09	6.92383E-09	1.05113E-08	0.0105113
396866.283767477.2	396866.28	3767477	0.000268769	0	3.58359E-05	3.58359E-05	0.000125426	0	8.95897E-06	0	7.16717E-05	0	3.64506E-09	7.03488E-09	1.06799E-08	0.0106799
396966.283767477.2	396966.28	3767477	0.00027742	0	3.69893E-05	3.69893E-05	0.000129463	0	9.24733E-06	0	7.39786E-05	0	3.76238E-09	7.26131E-09	1.10237E-08	0.0110237
397066.283767477.2	397066.28	3767477	0.000275986	0	3.67981E-05	3.67981E-05	0.000128793	0	9.19952E-06	0	7.35962E-05	0	3.74293E-09	7.22377E-09	1.09667E-08	0.0109667
397166.283767477.2	397166.28	3767477	0.000261753	0	3.49004E-05	3.49004E-05	0.000122152	0	8.72511E-06	0	6.98009E-05	0	3.54991E-09	6.85125E-09	1.04012E-08	0.0104012
397266.283767477.2	397266.28	3767477	0.000238465	0	3.17953E-05	3.17953E-05	0.000111284	0	7.94883E-06	0	6.35906E-05	0	3.23407E-09	6.24169E-09	9.47576E-09	0.0094758
397366.283767477.2	397366.28	3767477	0.000214896	0	2.86529E-05	2.86529E-05	0.000100285	0	7.16321E-06	0	5.73057E-05	0	2.91444E-09	5.6248E-09	8.53923E-09	0.0085392
397466.283767477.2	397466.28	3767477	0.000191827	0	2.5577E-05	2.5577E-05	8.95194E-05	0	6.39425E-06	0	5.1154E-05	0	2.60157E-09	5.02098E-09	7.62255E-09	0.0076226
397566.283767477.2	397566.28	3767477	0.000165987	0	2.21316E-05	2.21316E-05	7.74607E-05	0	5.53291E-06	0	4.42633E-05	0	2.25113E-09	4.34463E-09	6.59576E-09	0.0065958
397666.283767477.2	397666.28	3767477	0.000142505	0	1.90007E-05	1.90007E-05	6.65025E-05	0	4.75018E-06	0	3.80014E-05	0	1.93266E-09	3.73E-09	5.66266E-09	0.0056627
397766.283767477.2	397766.28	3767477	0.000122259	0	1.63012E-05	1.63012E-05	5.70543E-05	0	4.07531E-06	0	3.26025E-05	0	1.65809E-09	3.20007E-09	4.85816E-09	0.0048582
397866.283767477.2	397866.28	3767477	0.000105587	0	1.40782E-05	1.40782E-05	4.92738E-05	0	3.51956E-06	0	2.81564E-05	0	1.43197E-09	2.76367E-09	4.19565E-09	0.0041956

Garvey Reservoir Rehab - Mitigated Misc. Site Upgrades			Demolition - 2025	Demolition - 2026	Site Preparation - 202	Site Preparation - 202	Grading - 2025	Grading - 2026	Infrastructure - 2025	Infrastructure - 2026	Paving - 2025	Architectural Coating -	Child Risk			
Unique Identifier	X (UTM)	Y (UTM)	2025	1900	2025	2026	2026	1900	2026	1900	2026	1900	3rd Trimester	0<2	Total	per million
396166.283767577.2	396166.28	3767577	0.000171848	0	2.29131E-05	2.29131E-05	8.01959E-05	0	5.72828E-06	0	4.58262E-05	0	2.33062E-09	4.49804E-09	6.82865E-09	0.0068287
396266.283767577.2	396266.28	3767577	0.000199205	0	2.65607E-05	2.65607E-05	9.29624E-05	0	6.64017E-06	0	5.31214E-05	0	2.70163E-09	5.21409E-09	7.91572E-09	0.0079157
396366.283767577.2	396366.28	3767577	0.00023706	0	3.1608E-05	3.1608E-05	0.000110628	0	7.902E-06	0	6.3216E-05	0	3.21502E-09	6.20492E-09	9.41994E-09	0.0094199
396466.283767577.2	396466.28	3767577	0.000282262	0	3.76349E-05	3.76349E-05	0.000131722	0	9.40872E-06	0	7.52697E-05	0	3.82805E-09	7.38804E-09	1.12161E-08	0.0112161
396566.283767577.2	396566.28	3767577	0.000329595	0	4.39461E-05	4.39461E-05	0.000153811	0	1.09865E-05	0	8.78921E-05	0	4.46999E-09	8.62698E-09	1.3097E-08	0.013097
396666.283767577.2	396666.28	3767577	0.000367154	0	4.89539E-05	4.89539E-05	0.000171339	0	1.22385E-05	0	9.79077E-05	0	4.97936E-09	9.61006E-09	1.45894E-08	0.0145894
396766.283767577.2	396766.28	3767577	0.000371068	0	4.94757E-05	4.94757E-05	0.000173165	0	1.23689E-05	0	9.89514E-05	0	5.03244E-09	9.71249E-09	1.47449E-08	0.0147449
396866.283767577.2	396866.28	3767577	0.000389977	0	5.19969E-05	5.19969E-05	0.000181989	0	1.29992E-05	0	0.000103994	0	5.28889E-09	1.02074E-08	1.54963E-08	0.0154963
396966.283767577.2	396966.28	3767577	0.000394942	0	5.26589E-05	5.26589E-05	0.000184306	0	1.31647E-05	0	0.000105318	0	5.35622E-09	1.03374E-08	1.56936E-08	0.0156936
397066.283767577.2	397066.28	3767577	0.000392468	0	5.23291E-05	5.23291E-05	0.000183152	0	1.30823E-05	0	0.000104658	0	5.32268E-09	1.02726E-08	1.55953E-08	0.0155953
397166.283767577.2	397166.28	3767577	0.000378365	0	5.04487E-05	5.04487E-05	0.00017657	0	1.26122E-05	0	0.000100897	0	5.13141E-09	9.9035E-09	1.50349E-08	0.0150349
397266.283767577.2	397266.28	3767577	0.000343164	0	4.57552E-05	4.57552E-05	0.000160143	0	1.14388E-05	0	9.15103E-05	0	4.65401E-09	8.98213E-09	1.36361E-08	0.0136361
397366.283767577.2	397366.28	3767577	0.000297763	0	3.97017E-05	3.97017E-05	0.000138956	0	9.92542E-06	0	7.94034E-05	0	4.03827E-09	7.79378E-09	1.18321E-08	0.0118321
397466.283767577.2	397466.28	3767577	0.000254935	0	3.39913E-05	3.39913E-05	0.00011897	0	8.49782E-06	0	6.79826E-05	0	3.45744E-09	6.67278E-09	1.01302E-08	0.0101302
397566.283767577.2	397566.28	3767577	0.00020894	0	2.78586E-05	2.78586E-05	9.75051E-05	0	6.96465E-06	0	5.57172E-05	0	2.83365E-09	5.46888E-09	8.30253E-09	0.0083025
397666.283767577.2	397666.28	3767577	0.000171263	0	2.28351E-05	2.28351E-05	7.99229E-05	0	5.70878E-06	0	4.56703E-05	0	2.32268E-09	4.48273E-09	6.80541E-09	0.0068054
397766.283767577.2	397766.28	3767577	0.000141991	0	1.89322E-05	1.89322E-05	6.62626E-05	0	4.73304E-06	0	3.78643E-05	0	1.92569E-09	3.71654E-09	5.64223E-09	0.0056422
397866.283767577.2	397866.28	3767577	0.000119374	0	1.59165E-05	1.59165E-05	5.57078E-05	0	3.97913E-06	0	3.1833E-05	0	1.61895E-09	3.12454E-09	4.7435E-09	0.0047435
396166.283767677.2	396166.28	3767677	0.000198805	0	2.65074E-05	2.65074E-05	9.27758E-05	0	6.62684E-06	0	5.30147E-05	0	2.69621E-09	5.20362E-09	7.89983E-09	0.0078998
396266.283767677.2	396266.28	3767677	0.000241484	0	3.21979E-05	3.21979E-05	0.000112693	0	8.04948E-06	0	6.43958E-05	0	3.27503E-09	6.32072E-09	9.59575E-09	0.0095957
396366.283767677.2	396366.28	3767677	0.000304979	0	4.06638E-05	4.06638E-05	0.000142323	0	1.0166E-05	0	8.13277E-05	0	4.13614E-09	7.98265E-09	1.21188E-08	0.0121188
396466.283767677.2	396466.28	3767677	0.000395684	0	5.27579E-05	5.27579E-05	0.000184653	0	1.31895E-05	0	0.000105516	0	5.36629E-09	1.03568E-08	1.57231E-08	0.0157231
396566.283767677.2	396566.28	3767677	0.000487179	0	6.49572E-05	6.49572E-05	0.00022735	0	1.62393E-05	0	0.000129914	0	6.60715E-09	1.27516E-08	1.93588E-08	0.0193588
396666.283767677.2	396666.28	3767677	0.000548217	0	7.30956E-05	7.30956E-05	0.000255835	0	1.82739E-05	0	0.000146191	0	7.43495E-09	1.43493E-08	2.17842E-08	0.0217842
396766.283767677.2	396766.28	3767677	0.000609811	0	8.13081E-05	8.13081E-05	0.000284578	0	2.0327E-05	0	0.000162616	0	8.27029E-09	1.59615E-08	2.42318E-08	0.0242318
396866.283767677.2	396866.28	3767677	0.00065649	0	8.7532E-05	8.7532E-05	0.000306362	0	2.1883E-05	0	0.000175064	0	8.90336E-09	1.71833E-08	2.60866E-08	0.0260866
396966.283767677.2	396966.28	3767677	0.000661225	0	8.81634E-05	8.81634E-05	0.000308572	0	2.20408E-05	0	0.000176327	0	8.96758E-09	1.73072E-08	2.62748E-08	0.0262748
397066.283767677.2	397066.28	3767677	0.000631336	0	8.41781E-05	8.41781E-05	0.000294623	0	2.10445E-05	0	0.000168356	0	8.56221E-09	1.65249E-08	2.50871E-08	0.0250871
397166.283767677.2	397166.28	3767677	0.000613652	0	8.18202E-05	8.18202E-05	0.000286371	0	2.04551E-05	0	0.00016364	0	8.32238E-09	1.6062E-08	2.43844E-08	0.0243844
397266.283767677.2	397266.28	3767677	0.000583834	0	7.78445E-05	7.78445E-05	0.000272456	0	1.94611E-05	0	0.000155689	0	7.91798E-09	1.52815E-08	2.31995E-08	0.0231995
397366.283767677.2	397366.28	3767677	0.000472906	0	6.30541E-05	6.30541E-05	0.000220689	0	1.57635E-05	0	0.000126108	0	6.41358E-09	1.23781E-08	1.87916E-08	0.0187916
397466.283767677.2	397466.28	3767677	0.000367442	0	4.89923E-05	4.89923E-05	0.000171473	0	1.22481E-05	0	9.79845E-05	0	4.98327E-09	9.61759E-09	1.46009E-08	0.0146009
397566.283767677.2	397566.28	3767677	0.000271966	0	3.62621E-05	3.62621E-05	0.000126917	0	9.06553E-06	0	7.25243E-05	0	3.68842E-09	7.11856E-09	1.0807E-08	0.010807
397666.283767677.2	397666.28	3767677	0.000207852	0	2.77136E-05	2.77136E-05	9.69976E-05	0	6.9284E-06	0	5.54272E-05	0	2.8189E-09	5.44041E-09	8.25932E-09	0.0082593
397766.283767677.2	397766.28	3767677	0.000164571	0	2.19428E-05	2.19428E-05	7.67997E-05	0	5.48569E-06	0	4.38855E-05	0	2.23192E-09	4.30755E-09	6.53947E-09	0.0065395
397866.283767677.2	397866.28	3767677	0.000133998	0	1.78664E-05	1.78664E-05	6.25324E-05	0	4.4666E-06	0	3.57328E-05	0	1.81729E-09	3.50732E-09	5.32461E-09	0.0053246
396166.283767777.2	396166.28	3767777	0.00022553	0	3.00707E-05	3.00707E-05	0.000105248	0	7.51768E-06	0	6.01415E-05	0	3.05866E-09	5.90314E-09	8.96179E-09	0.0089618
396266.283767777.2	396266.28	3767777	0.000299369	0	3.99159E-05	3.99159E-05	0.000139706	0	9.97897E-06	0	7.98318E-05	0	4.06006E-09	7.83582E-09	1.18959E-08	0.0118959
396366.283767777.2	396366.28	3767777	0.000399266	0	5.32354E-05	5.32354E-05	0.000186324	0	1.33089E-05	0	0.000106471	0	5.41486E-09	1.04506E-08	1.58654E-08	0.0158654
396466.283767777.2	396466.28	3767777	0.000563128	0	7.50837E-05	7.50837E-05	0.000262793	0	1.87709E-05	0	0.000150167	0	7.63717E-09	1.47396E-08	2.23767E-08	0.0223767
396566.283767777.2	396566.28	3767777	0.000809439	0	0.000107925	0.000107925	0.000377738	0	2.69813E-05	0	0.00021585	0	1.09777E-08	2.11866E-08	3.21643E-08	0.0321643
396666.283767777.2	396666.28	3767777	0.001212598	0	0.00016168	0.00016168	0.000565879	0	4.04199E-05	0	0.000323359	0	1.64453E-08	3.17391E-08	4.81844E-08	0.0481844
396766.283767777.2	396766.28	3767777	0.001485086	0	0.000198011	0.000198011	0.00069304	0	4.95029E-05	0	0.000396023	0	2.01408E-08	3.88713E-08	5.90121E-08	0.0590121
396866.283767777.2	396866.28	3767777	0.001578023	0	0.000210403	0.000210403	0.000736411	0	5.26008E-05	0	0.000420806	0	2.14012E-08	4.13039E-08	6.27051E-08	0.0627051
396966.283767777.2	396966.28	3767777	0.001472436	0	0.000196325	0.000196325	0.000687137	0	4.90812E-05	0	0.00039265	0	1.99693E-08	3.85402E-08	5.85095E-08	0.0585095
397066.283767777.2	397066.28	3767777	0.001232434	0	0.000164325	0.000164325	0.000575136	0	4.10811E-05	0	0.000328649	0	1.67143E-08	3.22583E-08	4.89726E-08	0.0489726
397166.283767777.2	397166.28	3767777	0.001323587	0	0.000176478	0.000176478	0.000617674	0	4.41196E-05	0	0.000352957	0	1.79506E-08	3.46442E-08	5.25947E-08	0.0525947
397266.283767777.2	397266.28	3767777	0.001445242	0	0.000192699	0.000192699	0.000674446	0	4.81747E-05	0	0.000385398	0	1.96005E-08	3.78284E-08	5.74289E-08	0.0574289
397366.283767777.2	397366.28	3767777	0.001095609	0	0.000146081	0.000146081	0.000511284	0	3.65203E-05	0	0.000292162	0	1.48587E-08	2.8677E-08	4.35357E-08	0.0435357
397466.283767777.2	397466.28	3767777	0.000613761	0	8.18347E-05	8.18347E-05	0.000286422	0	2.04587E-05	0	0.000163669	0	8.32386E-09	1.60648E-08	2.43887E-08	0.0243887
397566.283767777.2	397566.28	3767777	0.000363441	0	4.84588E-05	4.84588E-05	0.000169606	0	1.21147E-05	0	9.69177E-05	0	4.92901E-09	9.51288E-09	1.44419E-08	0.0144419
397666.283767777.2	397666.28	3767777	0.000252886	0	3.37181E-05	3.37181E-05	0.000118013	0	8.42953E-06	0	6.74362E-05	0	3.42965E-09	6.61915E-09	1.00488E-08	0.0100488
397766.283767777.2	397766.28	3767777	0.000189673	0	2.52897E-05	2.52897E-05	8.85141E-05	0	6.32244E-06	0	5.05795E-05	0	2.57236E-09	4.96459E-09	7.53695E-09	0.0075369
397866.283767777.2	397866.28	3767777	0.000149659	0	1.99545E-05	1.99545E-05	6.98408E-05	0	4.98863E-06	0	3.9909E-05	0	2.02968E-09	3.91724E-09	5.94692E-09	0.0059469
396166.283767877.2	396166.28	3767877	0.000249251	0	3.32335E-05	3.32335E-05	0.000116317	0	8.30838E-06	0	6.6467E-05	0	3.38036E-09	6.52402E-09	9.90438E-09	0.0099044
396266.283767877.2	396266.28	3767877	0.00034588	0	4.61173E-05	4.61173E-05	0.00016141	0	1.15293E-05	0	9.22345E-05	0	4.69084E-09	9.05321E-09	1.3744E-08	0.013744
396366.283767877.2	396366.28	3767877	0.000523602	0	6.98135E-05	6.98135E-05	0.000244347	0	1.74534E-05	0	0.000139627	0	7.10111E-09	1.3705E-08	2.08061E-08	0.0208061
396466.283767877.2	396466.28	3767877	0.000896577	0	0.000119544	0.000119544	0.000418403	0	2.98859E-05	0	0.000239087	0	1.21594E-08	2.34674E-08	3.56268E-08	0.0356268
396566.283767877.2	396566.28	3767877	0.001704507	0	0.000227268	0.000227268	0.000795437	0	5.68169E-05	0	0.000454535	0	2.31166E-08	4.46146E-08	6.77312E-08	0.0677312
397466.283767877.2	397466.28	3767877	0.001105301	0	0.000147373	0.000147373	0.000515807	0	3.68434E-05	0	0.000294747	0	1.49902E-08	2.89306E-08	4.39208E-08	0.0439208
397566.283767877.2	397566.28	3767877	0.000484637	0	6.46182E-05	6.46182E-05	0.000226164	0	1.61546E-05	0	0.000129236	0	6.57267E-09	1.26851E-08	1.92578E-08	0.0192578
397666.283767877.2	397666.28	3767877	0.000300195	0	4.0026E-05	4.0026E-05	0.000140091	0	1.00065E-05	0	8.00521E-05	0	4.07126E-09	7.85745E-09	1.19287E-08	0.0119287
397766.283767877.2	397766.28	3767877	0.000213863	0	2.85151E-05	2.85151E-05	9.98028E-05	0	7.12877E-06	0	5.70302E-05	0	2.90042E-09	5.59775E-09	8.49817E-09	0.0084982
397866.283767877.2	397866.28	3767877	0.000166276	0	2.21702E-05	2.21702E-05	7.75956E-05	0	5.54254E-06	0	4.43403E-05	0	2.25505E-09	4.35219E-09	6.60724E-09	0.0066072
396166.283767977.2	396166.28	3767977	0.000265366	0	3.53822E-05	3.53822E-05	0.000123838	0	8.84555E-06	0	7.07644E-05	0	3.59891E-09	6.94582E-09	1.05447E-08	0.0105447
396266.283767977.2	396266.28	3767977	0.00038501	0	5.13347E-05	5.13347E-05	0.000179672	0	1.28337E-05	0	0.000102669	0	5.22153E-09	1.00774E-08	1.5299E-08	0.015299
396366.283767977.2	396366.28	3767977	0.000633701	0	8.44935E-05	8.44935E-05	0.000295727	0	2.11234E-05	0	0.000168987	0	8.59429E-09	1.65868E-08	2.51811E-08	0.0251811
396466.283767977.2	396466.28	3767977	0.001497624	0	0.000199683	0.000199683	0.000698891	0	4.99208E-05	0	0.000399367	0	2.03109E-08	3.91995E-08	5.95104E-08	0.0595104
397466.283767977.2	397466.28	3767977	0.001257898	0	0.00016772	0.00016772	0.000587019	0	4.19299E-05	0	0.000335439	0	1.70597E-08	3.29248E-08	4.99845E-08	0.0499845
397566.283767977.2	397566.28	3767977	0.000598949	0	7.98599E-05	7.98599E-05	0.00027951	0	1.9965E-05	0	0.00015972	0	8.12298E-09	1.56772E-08	2.38001E-08	0.0238001
397666.283767977.2	397666.28	3767977	0.000353538	0	4.71384E-05	4.71384E-05	0.000164984	0	1.17846E-05	0	9.42768E-05	0	4.7947E-09	9.25367E-09	1.40484E-08	0.0140484

Garvey Reservoir Rehab - Mitigated Misc. Site Upgrades			Demolition - 2025	Demolition - 2026	Site Preparation - 202	Site Preparation - 202	Grading - 2025	Grading - 2026	Infrastructure - 2025	Infrastructure - 2026	Paving - 2025	Architectural Coating -	Child Risk			
Unique Identifier	X (UTM)	Y (UTM)	2025	1900	2025	2026	2026	1900	2026	1900	2026	1900	3rd Trimester	0<2	Total	per million
397766.283767977.2	397766.28	3767977	0.000248308	0	3.31077E-05	3.31077E-05	0.000115877	0	8.27693E-06	0	6.62154E-05	0	3.36757E-09	6.49932E-09	9.86689E-09	0.0098669
397866.283767977.2	397866.28	3767977	0.00018136	0	2.41813E-05	2.41813E-05	8.46346E-05	0	6.04533E-06	0	4.83626E-05	0	2.45961E-09	4.74699E-09	7.20661E-09	0.0072066
396166.283768077.2	396166.28	3768077	0.000274667	0	3.66222E-05	3.66222E-05	0.000128178	0	9.15555E-06	0	7.32444E-05	0	3.72504E-09	7.18925E-09	1.09143E-08	0.0109143
396266.283768077.2	396266.28	3768077	0.000404753	0	5.39671E-05	5.39671E-05	0.000188885	0	1.34918E-05	0	0.000107934	0	5.48929E-09	1.05942E-08	1.60835E-08	0.0160835
396366.283768077.2	396366.28	3768077	0.000687603	0	9.16805E-05	9.16805E-05	0.000320882	0	2.29201E-05	0	0.000183361	0	9.32532E-09	1.79976E-08	2.7323E-08	0.027323
396466.283768077.2	396466.28	3768077	0.001685129	0	0.000224684	0.000224684	0.000786394	0	5.6171E-05	0	0.000449368	0	2.28538E-08	4.41073E-08	6.69612E-08	0.0669612
397466.283768077.2	397466.28	3768077	0.00167523	0	0.000223364	0.000223364	0.000781774	0	5.5841E-05	0	0.000446728	0	2.27196E-08	4.38482E-08	6.65678E-08	0.0665678
397566.283768077.2	397566.28	3768077	0.000710717	0	9.47623E-05	9.47623E-05	0.000331668	0	2.36906E-05	0	0.000189525	0	9.63879E-09	1.86026E-08	2.82414E-08	0.0282414
397666.283768077.2	397666.28	3768077	0.000414671	0	5.52895E-05	5.52895E-05	0.000193513	0	1.38224E-05	0	0.000110579	0	5.6238E-09	1.08538E-08	1.64776E-08	0.0164776
397766.283768077.2	397766.28	3768077	0.000277399	0	3.69865E-05	3.69865E-05	0.000129453	0	9.24662E-06	0	7.3973E-05	0	3.7621E-09	7.26076E-09	1.10229E-08	0.0110229
397866.283768077.2	397866.28	3768077	0.000199853	0	2.66471E-05	2.66471E-05	9.32649E-05	0	6.66178E-06	0	5.32942E-05	0	2.71042E-09	5.23105E-09	7.94147E-09	0.0079415
396166.283768177.2	396166.28	3768177	0.000270004	0	3.60005E-05	3.60005E-05	0.000126002	0	9.00012E-06	0	7.2001E-05	0	3.6618E-09	7.0672E-09	1.0729E-08	0.010729
396266.283768177.2	396266.28	3768177	0.000402014	0	5.36019E-05	5.36019E-05	0.000187607	0	1.34005E-05	0	0.000107204	0	5.45214E-09	1.05225E-08	1.59746E-08	0.0159746
396366.283768177.2	396366.28	3768177	0.000685634	0	9.14178E-05	9.14178E-05	0.000319962	0	2.28545E-05	0	0.000182836	0	9.2986E-09	1.79461E-08	2.72447E-08	0.0272447
396466.283768177.2	396466.28	3768177	0.001566639	0	0.000208885	0.000208885	0.000731098	0	5.22213E-05	0	0.00041777	0	2.12468E-08	4.10059E-08	6.22528E-08	0.0622528
397466.283768177.2	397466.28	3768177	0.00157277	0	0.000209703	0.000209703	0.000733959	0	5.24257E-05	0	0.000419405	0	2.133E-08	4.11664E-08	6.24964E-08	0.0624964
397566.283768177.2	397566.28	3768177	0.000740617	0	9.87489E-05	9.87489E-05	0.000345621	0	2.46872E-05	0	0.000197498	0	1.00443E-08	1.93852E-08	2.94295E-08	0.0294295
397666.283768177.2	397666.28	3768177	0.000438367	0	5.8449E-05	5.8449E-05	0.000204571	0	1.46122E-05	0	0.000116898	0	5.94516E-09	1.1474E-08	1.74192E-08	0.0174192
397766.283768177.2	397766.28	3768177	0.00029897	0	3.98627E-05	3.98627E-05	0.00013952	0	9.96568E-06	0	7.97255E-05	0	4.05465E-09	7.82539E-09	1.188E-08	0.01188
397866.283768177.2	397866.28	3768177	0.000212345	0	2.83127E-05	2.83127E-05	9.90946E-05	0	7.07818E-06	0	5.66255E-05	0	2.87984E-09	5.55803E-09	8.43787E-09	0.0084379
396166.283768277.2	396166.28	3768277	0.000253867	0	3.38489E-05	3.38489E-05	0.000118471	0	8.46222E-06	0	6.76978E-05	0	3.44295E-09	6.64482E-09	1.00878E-08	0.0100878
396266.283768277.2	396266.28	3768277	0.000377893	0	5.03857E-05	5.03857E-05	0.00017635	0	1.25964E-05	0	0.000100771	0	5.125E-09	9.89114E-09	1.50161E-08	0.0150161
396366.283768277.2	396366.28	3768277	0.000623965	0	8.31954E-05	8.31954E-05	0.000291184	0	2.07988E-05	0	0.000166391	0	8.46225E-09	1.63319E-08	2.47942E-08	0.0247942
396466.283768277.2	396466.28	3768277	0.001319952	0	0.000175994	0.000175994	0.000615978	0	4.39984E-05	0	0.000351987	0	1.79013E-08	3.4549E-08	5.24503E-08	0.0524503
397366.283768277.2	397366.28	3768277	0.001948446	0	0.000259793	0.000259793	0.000909275	0	6.49482E-05	0	0.000519586	0	2.64249E-08	5.09995E-08	7.74244E-08	0.0774244
397466.283768277.2	397466.28	3768277	0.001164192	0	0.000155226	0.000155226	0.000543289	0	3.88064E-05	0	0.000310451	0	1.57888E-08	3.04721E-08	4.62609E-08	0.0462609
397566.283768277.2	397566.28	3768277	0.000698258	0	9.31011E-05	9.31011E-05	0.000325854	0	2.32753E-05	0	0.000186202	0	9.46982E-09	1.82765E-08	2.77463E-08	0.0277463
397666.283768277.2	397666.28	3768277	0.000438573	0	5.84764E-05	5.84764E-05	0.000204667	0	1.46191E-05	0	0.000116953	0	5.94795E-09	1.14794E-08	1.74274E-08	0.0174274
397766.283768277.2	397766.28	3768277	0.000302137	0	4.02849E-05	4.02849E-05	0.000140997	0	1.00712E-05	0	8.05698E-05	0	4.0976E-09	7.90827E-09	1.20059E-08	0.0120059
397866.283768277.2	397866.28	3768277	0.000225471	0	3.00628E-05	3.00628E-05	0.00010522	0	7.51569E-06	0	6.01255E-05	0	3.05785E-09	5.90157E-09	8.95942E-09	0.0089594
396166.283768377.2	396166.28	3768377	0.000231169	0	3.08225E-05	3.08225E-05	0.000107879	0	7.70563E-06	0	6.1645E-05	0	3.13512E-09	6.05072E-09	9.18584E-09	0.0091858
396266.283768377.2	396266.28	3768377	0.000340701	0	4.54267E-05	4.54267E-05	0.000158994	0	1.13567E-05	0	9.08535E-05	0	4.6206E-09	8.91765E-09	1.35383E-08	0.0135383
396366.283768377.2	396366.28	3768377	0.000532527	0	7.10036E-05	7.10036E-05	0.000248513	0	1.77509E-05	0	0.000142007	0	7.22216E-09	1.39386E-08	2.11608E-08	0.0211608
396466.283768377.2	396466.28	3768377	0.000985084	0	0.000131345	0.000131345	0.000459706	0	3.28361E-05	0	0.000262689	0	1.33598E-08	2.5784E-08	3.91438E-08	0.0391438
397266.283768377.2	397266.28	3768377	0.001462107	0	0.000194948	0.000194948	0.000682317	0	4.87369E-05	0	0.000389895	0	1.98292E-08	3.82699E-08	5.8099E-08	0.058099
397366.283768377.2	397366.28	3768377	0.001154325	0	0.00015391	0.00015391	0.000538685	0	3.84775E-05	0	0.00030782	0	1.5655E-08	3.02138E-08	4.58688E-08	0.0458688
397466.283768377.2	397466.28	3768377	0.000861312	0	0.000114842	0.000114842	0.000401945	0	2.87104E-05	0	0.000229683	0	1.16812E-08	2.25444E-08	3.42255E-08	0.0342255
397566.283768377.2	397566.28	3768377	0.000611647	0	8.1553E-05	8.1553E-05	0.000285435	0	2.03882E-05	0	0.000163106	0	8.29519E-09	1.60095E-08	2.43047E-08	0.0243047
397666.283768377.2	397666.28	3768377	0.000429503	0	5.72671E-05	5.72671E-05	0.000200435	0	1.43168E-05	0	0.000114534	0	5.82495E-09	1.1242E-08	1.7067E-08	0.017067
397766.283768377.2	397766.28	3768377	0.000308638	0	4.11517E-05	4.11517E-05	0.000144031	0	1.02879E-05	0	8.23035E-05	0	4.18577E-09	8.07843E-09	1.22642E-08	0.0122642
397866.283768377.2	397866.28	3768377	0.000235594	0	3.14126E-05	3.14126E-05	0.000109944	0	7.85314E-06	0	6.28251E-05	0	3.19514E-09	6.16655E-09	9.36169E-09	0.0093617
396166.283768477.2	396166.28	3768477	0.000209914	0	2.79885E-05	2.79885E-05	9.79597E-05	0	6.99712E-06	0	5.5977E-05	0	2.84686E-09	5.49438E-09	8.34124E-09	0.0083412
396266.283768477.2	396266.28	3768477	0.000294816	0	3.93088E-05	3.93088E-05	0.000137581	0	9.8272E-06	0	7.86176E-05	0	3.99831E-09	7.71665E-09	1.1715E-08	0.011715
396366.283768477.2	396366.28	3768477	0.000434026	0	5.78701E-05	5.78701E-05	0.000202545	0	1.44675E-05	0	0.00011574	0	5.88628E-09	1.13604E-08	1.72467E-08	0.0172467
396466.283768477.2	396466.28	3768477	0.000713717	0	9.51622E-05	9.51622E-05	0.000333068	0	2.37906E-05	0	0.000190324	0	9.67946E-09	1.86811E-08	2.83606E-08	0.0283606
397166.283768477.2	397166.28	3768477	0.001132219	0	0.000150963	0.000150963	0.000528369	0	3.77406E-05	0	0.000301925	0	1.53552E-08	2.96352E-08	4.49904E-08	0.0449904
397266.283768477.2	397266.28	3768477	0.000989281	0	0.000131904	0.000131904	0.000461665	0	3.2976E-05	0	0.000263808	0	1.34167E-08	2.58939E-08	3.93106E-08	0.0393106
397366.283768477.2	397366.28	3768477	0.000830456	0	0.000110728	0.000110728	0.000387546	0	2.76819E-05	0	0.000221455	0	1.12627E-08	2.17367E-08	3.29994E-08	0.0329994
397466.283768477.2	397466.28	3768477	0.000664476	0	8.85969E-05	8.85969E-05	0.000310089	0	2.21492E-05	0	0.000177194	0	9.01167E-09	1.73923E-08	2.6404E-08	0.026404
397566.283768477.2	397566.28	3768477	0.000508121	0	6.77494E-05	6.77494E-05	0.000237123	0	1.69374E-05	0	0.000135499	0	6.89116E-09	1.32998E-08	2.01909E-08	0.0201909
397666.283768477.2	397666.28	3768477	0.000383512	0	5.1135E-05	5.1135E-05	0.000178972	0	1.27837E-05	0	0.00010227	0	5.20122E-09	1.00382E-08	1.52394E-08	0.0152394
397766.283768477.2	397766.28	3768477	0.000298996	0	3.98662E-05	3.98662E-05	0.000139532	0	9.96655E-06	0	7.97324E-05	0	4.05501E-09	7.82607E-09	1.18811E-08	0.0118811
397866.283768477.2	397866.28	3768477	0.00023086	0	3.07813E-05	3.07813E-05	0.000107735	0	7.69533E-06	0	6.15626E-05	0	3.13093E-09	6.04263E-09	9.17356E-09	0.0091736
396166.283768577.2	396166.28	3768577	0.000196214	0	2.61618E-05	2.61618E-05	9.15664E-05	0	6.54046E-06	0	5.23237E-05	0	2.66106E-09	5.13579E-09	7.79685E-09	0.0077969
396266.283768577.2	396266.28	3768577	0.000246792	0	3.29056E-05	3.29056E-05	0.00011517	0	8.2264E-06	0	6.58112E-05	0	3.34701E-09	6.45965E-09	9.80666E-09	0.0098067
396366.283768577.2	396366.28	3768577	0.000343936	0	4.58581E-05	4.58581E-05	0.000160503	0	1.14645E-05	0	9.17162E-05	0	4.66447E-09	9.00233E-09	1.36668E-08	0.0136668
396466.283768577.2	396466.28	3768577	0.000526572	0	7.02096E-05	7.02096E-05	0.000245734	0	1.75524E-05	0	0.000140419	0	7.1414E-09	1.37827E-08	2.09241E-08	0.0209241
396566.283768577.2	396566.28	3768577	0.00084453	0	0.000112604	0.000112604	0.000394114	0	2.8151E-05	0	0.000225208	0	1.14536E-08	2.21051E-08	3.35587E-08	0.0335587
396866.283768577.2	396866.28	3768577	0.003855872	0	0.000514116	0.000514116	0.001799407	0	0.000128529	0	0.001028233	0	5.22936E-08	1.00925E-07	1.53219E-07	0.1532189
396966.283768577.2	396966.28	3768577	0.00240246	0	0.000320328	0.000320328	0.001121148	0	8.0082E-05	0	0.000640656	0	3.25823E-08	6.28831E-08	9.54654E-08	0.0954654
397066.283768577.2	397066.28	3768577	0.001197921	0	0.000159723	0.000159723	0.00055903	0	3.99307E-05	0	0.000319445	0	1.62463E-08	3.13549E-08	4.76012E-08	0.0476012
397166.283768577.2	397166.28	3768577	0.000884586	0	0.000117945	0.000117945	0.000412807	0	2.94862E-05	0	0.00023589	0	1.19968E-08	2.31536E-08	3.51504E-08	0.0351504
397266.283768577.2	397266.28	3768577	0.000736657	0	9.8221E-05	9.8221E-05	0.000343773	0	2.45552E-05	0	0.000196442	0	9.99059E-09	1.92816E-08	2.92722E-08	0.0292722
397366.283768577.2	397366.28	3768577	0.000637978	0	8.50637E-05	8.50637E-05	0.000297723	0	2.12659E-05	0	0.000170127	0	8.65229E-09	1.66987E-08	2.5351E-08	0.025351
397466.283768577.2	397466.28	3768577	0.000526681	0	7.02242E-05	7.02242E-05	0.000245785	0	1.7556E-05	0	0.000140448	0	7.14288E-09	1.37856E-08	2.09285E-08	0.0209285
397566.283768577.2	397566.28	3768577	0.000432372	0	5.76495E-05	5.76495E-05	0.000201773	0	1.44124E-05	0	0.000115299	0	5.86385E-09	1.13171E-08	1.71809E-08	0.0171809
397666.283768577.2	397666.28	3768577	0.000345235	0	4.60313E-05	4.60313E-05	0.00016111	0	1.15078E-05	0	9.20626E-05	0	4.68209E-09	9.03633E-09	1.37184E-08	0.0137184
397766.283768577.2	397766.28	3768577	0.000272257	0	3.6301E-05	3.6301E-05	0.000127053	0	9.07525E-06	0	7.2602E-05	0	3.69237E-09	7.12619E-09	1.08186E-08	0.0108186
397866.283768577.2	397866.28	3768577	0.000218975	0	2.91966E-05	2.91966E-05	0.000102188	0	7.29916E-06	0	5.83933E-05	0	2.96975E-09	5.73155E-09	8.70129E-09	0.0087013
396166.283768677.2	396166.28	3768677	0.000174085	0	2.32113E-05	2.32113E-05	8.12395E-05	0	5.80282E-06	0	4.64226E-05	0	2.36095E-09	4.55657E-09	6.91752E-09	0.0069175
396266.283768677.2	396266.28	3768677	0.000221511	0	2.95349E-05	2.95349E-05	0.000103372	0	7.38371E-06	0	5.90697E-05	0	3.00415E-09	5.79794E-09	8.80209E-09	0.0088021

Garvey Reservoir Rehab - Mitigated Misc. Site Upgrades			Demolition - 2025	Demolition - 2026	Site Preparation - 2025	Site Preparation - 202	Grading - 2025	Grading - 2026	Infrastructure - 2025	Infrastructure - 2026	Paving - 2025	Architectural Coating -	Child Risk			
Unique Identifier	X (UTM)	Y (UTM)	2025	1900	2025	2026	2026	1900	2026	1900	2026	1900	3rd Trimester	0<2	Total	per million
396366.283768677.2	396366.28	3768677	0.000283121	0	3.77495E-05	3.77495E-05	0.000132123	0	9.43737E-06	0	7.54989E-05	0	3.8397E-09	7.41054E-09	1.12502E-08	0.0112502
396466.283768677.2	396466.28	3768677	0.000397557	0	5.30076E-05	5.30076E-05	0.000185527	0	1.32519E-05	0	0.000106015	0	5.39169E-09	1.04058E-08	1.57975E-08	0.0157975
396566.283768677.2	396566.28	3768677	0.000562178	0	7.49571E-05	7.49571E-05	0.00026235	0	1.87393E-05	0	0.000149914	0	7.62429E-09	1.47147E-08	2.2339E-08	0.022339
396666.283768677.2	396666.28	3768677	0.000800841	0	0.000106779	0.000106779	0.000373726	0	2.66947E-05	0	0.000213558	0	1.0861E-08	2.09616E-08	3.18226E-08	0.0318226
396766.283768677.2	396766.28	3768677	0.001062609	0	0.000141681	0.000141681	0.000495884	0	3.54203E-05	0	0.000283362	0	1.44112E-08	2.78132E-08	4.22244E-08	0.0422244
396866.283768677.2	396866.28	3768677	0.001261756	0	0.000168234	0.000168234	0.000588819	0	4.20585E-05	0	0.000336468	0	1.7112E-08	3.30258E-08	5.01378E-08	0.0501378
396966.283768677.2	396966.28	3768677	0.001159201	0	0.00015456	0.00015456	0.00054096	0	3.864E-05	0	0.00030912	0	1.57211E-08	3.03414E-08	4.60626E-08	0.0460626
397066.283768677.2	397066.28	3768677	0.000892922	0	0.000119056	0.000119056	0.000416697	0	2.97641E-05	0	0.000238112	0	1.21099E-08	2.33717E-08	3.54816E-08	0.0354816
397166.283768677.2	397166.28	3768677	0.000698968	0	9.31958E-05	9.31958E-05	0.000326185	0	2.32989E-05	0	0.000186392	0	9.47945E-09	1.82951E-08	2.77746E-08	0.0277746
397366.283768677.2	397366.28	3768677	0.000515549	0	6.87399E-05	6.87399E-05	0.000240589	0	1.7185E-05	0	0.00013748	0	6.9919E-09	1.34942E-08	2.04861E-08	0.0204861
397466.283768677.2	397466.28	3768677	0.000440864	0	5.87818E-05	5.87818E-05	0.000205736	0	1.46955E-05	0	0.000117564	0	5.97902E-09	1.15394E-08	1.75184E-08	0.0175184
397566.283768677.2	397566.28	3768677	0.000370391	0	4.93854E-05	4.93854E-05	0.000172849	0	1.23464E-05	0	9.87708E-05	0	5.02326E-09	9.69477E-09	1.4718E-08	0.014718
397666.283768677.2	397666.28	3768677	0.000307077	0	4.09436E-05	4.09436E-05	0.000143303	0	1.02359E-05	0	8.18873E-05	0	4.1646E-09	8.03758E-09	1.22022E-08	0.0122022
397766.283768677.2	397766.28	3768677	0.000250497	0	3.33996E-05	3.33996E-05	0.000116899	0	8.3499E-06	0	6.67992E-05	0	3.39725E-09	6.55662E-09	9.95387E-09	0.0099539
397866.283768677.2	397866.28	3768677	0.000206524	0	2.75366E-05	2.75366E-05	9.63781E-05	0	6.88415E-06	0	5.50732E-05	0	2.8009E-09	5.40566E-09	8.20656E-09	0.0082066
396166.283768777.2	396166.28	3768777	0.000155103	0	2.06805E-05	2.06805E-05	7.23816E-05	0	5.17012E-06	0	4.13609E-05	0	2.10352E-09	4.05975E-09	6.16327E-09	0.0061633
396266.283768777.2	396266.28	3768777	0.000190712	0	2.54283E-05	2.54283E-05	8.89991E-05	0	6.35708E-06	0	5.08566E-05	0	2.58645E-09	4.99179E-09	7.57824E-09	0.0075782
396366.283768777.2	396366.28	3768777	0.000235715	0	3.14287E-05	3.14287E-05	0.00011	0	7.85718E-06	0	6.28574E-05	0	3.19678E-09	6.16972E-09	9.3665E-09	0.0093665
396466.283768777.2	396466.28	3768777	0.000308978	0	4.1197E-05	4.1197E-05	0.00014419	0	1.02993E-05	0	8.2394E-05	0	4.19037E-09	8.08732E-09	1.22777E-08	0.0122777
396566.283768777.2	396566.28	3768777	0.000402951	0	5.37268E-05	5.37268E-05	0.000188044	0	1.34317E-05	0	0.000107454	0	5.46485E-09	1.0547E-08	1.60119E-08	0.0160119
396666.283768777.2	396666.28	3768777	0.000519028	0	6.92037E-05	6.92037E-05	0.000242213	0	1.73009E-05	0	0.000138407	0	7.03908E-09	1.35853E-08	2.06244E-08	0.0206244
396766.283768777.2	396766.28	3768777	0.00064058	0	8.54106E-05	8.54106E-05	0.000298937	0	2.13527E-05	0	0.000170821	0	8.68758E-09	1.67668E-08	2.54544E-08	0.0254544
396866.283768777.2	396866.28	3768777	0.000723667	0	9.6489E-05	9.6489E-05	0.000337711	0	2.41222E-05	0	0.000192978	0	9.81442E-09	1.89416E-08	2.8756E-08	0.028756
396966.283768777.2	396966.28	3768777	0.000717285	0	9.5638E-05	9.5638E-05	0.000334733	0	2.39095E-05	0	0.000191276	0	9.72786E-09	1.87746E-08	2.85024E-08	0.0285024
397066.283768777.2	397066.28	3768777	0.000640311	0	8.53748E-05	8.53748E-05	0.000298812	0	2.13437E-05	0	0.00017075	0	8.68393E-09	1.67598E-08	2.54437E-08	0.0254437
397166.283768777.2	397166.28	3768777	0.00054768	0	7.3024E-05	7.3024E-05	0.000255584	0	1.8256E-05	0	0.000146048	0	7.42766E-09	1.43352E-08	2.17629E-08	0.0217629
397266.283768777.2	397266.28	3768777	0.000482599	0	6.43465E-05	6.43465E-05	0.000225213	0	1.60866E-05	0	0.000128693	0	6.54503E-09	1.26318E-08	1.91768E-08	0.0191768
397366.283768777.2	397366.28	3768777	0.000422439	0	5.63252E-05	5.63252E-05	0.000197138	0	1.40813E-05	0	0.00011265	0	5.72914E-09	1.10571E-08	1.67862E-08	0.0167862
397466.283768777.2	397466.28	3768777	0.000366339	0	4.88452E-05	4.88452E-05	0.000170958	0	1.22113E-05	0	9.76905E-05	0	4.96831E-09	9.58873E-09	1.4557E-08	0.014557
397566.283768777.2	397566.28	3768777	0.000315044	0	4.20059E-05	4.20059E-05	0.000147021	0	1.05015E-05	0	8.40118E-05	0	4.27265E-09	8.24611E-09	1.25188E-08	0.0125188
397666.283768777.2	397666.28	3768777	0.00026842	0	3.57893E-05	3.57893E-05	0.000125263	0	8.94733E-06	0	7.15786E-05	0	3.64032E-09	7.02574E-09	1.06661E-08	0.0106661
397766.283768777.2	397766.28	3768777	0.000226659	0	3.02212E-05	3.02212E-05	0.000105774	0	7.5553E-06	0	6.04424E-05	0	3.07396E-09	5.93268E-09	9.00664E-09	0.0090066
397866.283768777.2	397866.28	3768777	0.000191843	0	2.55791E-05	2.55791E-05	8.95268E-05	0	6.39477E-06	0	5.11582E-05	0	2.60179E-09	5.02139E-09	7.62317E-09	0.0076232
396166.283768877.2	396166.28	3768877	0.000137328	0	1.83103E-05	1.83103E-05	6.40862E-05	0	4.57759E-06	0	3.66207E-05	0	1.86244E-09	3.59447E-09	5.45692E-09	0.0054569
396266.283768877.2	396266.28	3768877	0.000165463	0	2.20617E-05	2.20617E-05	7.7216E-05	0	5.51543E-06	0	4.41234E-05	0	2.24402E-09	4.3309E-09	6.57492E-09	0.0065749
396366.283768877.2	396366.28	3768877	0.000200742	0	2.67655E-05	2.67655E-05	9.36794E-05	0	6.69138E-06	0	5.35311E-05	0	2.72247E-09	5.2543E-09	7.97677E-09	0.0079768
396466.283768877.2	396466.28	3768877	0.00024772	0	3.30293E-05	3.30293E-05	0.000115603	0	8.25732E-06	0	6.60586E-05	0	3.35959E-09	6.48393E-09	9.84352E-09	0.0098435
396566.283768877.2	396566.28	3768877	0.000308614	0	4.11486E-05	4.11486E-05	0.00014402	0	1.02871E-05	0	8.22971E-05	0	4.18544E-09	8.07781E-09	1.22632E-08	0.0122632
396666.283768877.2	396666.28	3768877	0.000373707	0	4.98275E-05	4.98275E-05	0.000174396	0	1.24569E-05	0	9.96551E-05	0	5.06823E-09	9.78157E-09	1.48498E-08	0.0148498
396766.283768877.2	396766.28	3768877	0.000442016	0	5.89355E-05	5.89355E-05	0.000206274	0	1.47339E-05	0	0.000117871	0	5.99465E-09	1.15695E-08	1.75642E-08	0.0175642
396866.283768877.2	396866.28	3768877	0.000503445	0	6.7126E-05	6.7126E-05	0.000234941	0	1.67815E-05	0	0.000134252	0	6.82775E-09	1.31774E-08	2.00052E-08	0.0200052
396966.283768877.2	396966.28	3768877	0.000512329	0	6.83106E-05	6.83106E-05	0.000239087	0	1.70776E-05	0	0.000136621	0	6.94824E-09	1.34099E-08	2.03582E-08	0.0203582
397066.283768877.2	397066.28	3768877	0.000477553	0	6.36738E-05	6.36738E-05	0.000222858	0	1.59184E-05	0	0.000127348	0	6.47661E-09	1.24997E-08	1.89763E-08	0.0189763
397166.283768877.2	397166.28	3768877	0.000433026	0	5.77368E-05	5.77368E-05	0.000202079	0	1.44342E-05	0	0.000115474	0	5.87272E-09	1.13342E-08	1.72069E-08	0.0172069
397266.283768877.2	397266.28	3768877	0.00039248	0	5.23307E-05	5.23307E-05	0.000183157	0	1.30827E-05	0	0.000104661	0	5.32284E-09	1.02729E-08	1.55958E-08	0.0155958
397366.283768877.2	397366.28	3768877	0.000349223	0	4.65631E-05	4.65631E-05	0.000162971	0	1.16408E-05	0	9.31261E-05	0	4.73618E-09	9.14072E-09	1.38769E-08	0.0138769
397466.283768877.2	397466.28	3768877	0.000310032	0	4.13376E-05	4.13376E-05	0.000144681	0	1.03344E-05	0	8.26751E-05	0	4.20467E-09	8.11491E-09	1.23196E-08	0.0123196
397566.283768877.2	397566.28	3768877	0.000272659	0	3.63545E-05	3.63545E-05	0.000127241	0	9.08863E-06	0	7.2709E-05	0	3.69781E-09	7.1367E-09	1.08345E-08	0.0108345
397666.283768877.2	397666.28	3768877	0.000235829	0	3.14438E-05	3.14438E-05	0.000110053	0	7.86095E-06	0	6.28876E-05	0	3.19832E-09	6.17268E-09	9.371E-09	0.009371
397766.283768877.2	397766.28	3768877	0.000203808	0	2.71744E-05	2.71744E-05	9.51102E-05	0	6.79359E-06	0	5.43487E-05	0	2.76405E-09	5.33455E-09	8.0986E-09	0.0080986
397866.283768877.2	397866.28	3768877	0.000176779	0	2.35706E-05	2.35706E-05	8.2497E-05	0	5.89264E-06	0	4.71412E-05	0	2.39749E-09	4.6271E-09	7.02459E-09	0.0070246
3964253767739	396425	3767739	0.000436213	0	5.81617E-05	5.81617E-05	0.000203566	0	1.45404E-05	0	0.000116323	0	5.91594E-09	1.14176E-08	1.73336E-08	0.0173336
3964753767739	396475	3767739	0.00050667	0	6.7556E-05	6.7556E-05	0.000236446	0	1.6889E-05	0	0.000135112	0	6.87149E-09	1.32618E-08	2.01333E-08	0.0201333
3965253767739	396525	3767739	0.000576781	0	7.69041E-05	7.69041E-05	0.000269164	0	1.9226E-05	0	0.000153808	0	7.82233E-09	1.50969E-08	2.29193E-08	0.0229193
3965753767739	396575	3767739	0.000678095	0	9.04126E-05	9.04126E-05	0.000316444	0	2.26032E-05	0	0.000180825	0	9.19636E-09	1.77488E-08	2.69451E-08	0.0269451
3966253767739	396625	3767739	0.000746718	0	9.95624E-05	9.95624E-05	0.000348468	0	2.48906E-05	0	0.000199125	0	1.0127E-08	1.95449E-08	2.9672E-08	0.029672
3966753767739	396675	3767739	0.000834549	0	0.000111273	0.000111273	0.000389456	0	2.78183E-05	0	0.000222546	0	1.13182E-08	2.18439E-08	3.31621E-08	0.0331621
3967253767739	396725	3767739	0.000955492	0	0.000127399	0.000127399	0.000445896	0	3.18497E-05	0	0.000254798	0	1.29584E-08	2.50095E-08	3.79679E-08	0.0379679
3967753767739	396775	3767739	0.00096008	0	0.000128011	0.000128011	0.000448037	0	3.20027E-05	0	0.000256021	0	1.30207E-08	2.51296E-08	3.81502E-08	0.0381502
3968253767739	396825	3767739	0.001012541	0	0.000135005	0.000135005	0.000472519	0	3.37514E-05	0	0.000270011	0	1.37321E-08	2.65027E-08	4.02348E-08	0.0402348
3968753767739	396875	3767739	0.001044858	0	0.000139314	0.000139314	0.0004876	0	3.48286E-05	0	0.000278629	0	1.41704E-08	2.73486E-08	4.1519E-08	0.041519
3969253767739	396925	3767739	0.001032304	0	0.000137641	0.000137641	0.000481742	0	3.44101E-05	0	0.000275281	0	1.40002E-08	2.702E-08	4.10202E-08	0.0410202
3969753767739	396975	3767739	0.000998325	0	0.00013311	0.00013311	0.000465885	0	3.32775E-05	0	0.00026622	0	1.35393E-08	2.61306E-08	3.967E-08	0.03967
3970253767739	397025	3767739	0.000951632	0	0.000126884	0.000126884	0.000444095	0	3.17211E-05	0	0.000253769	0	1.29061E-08	2.49085E-08	3.78145E-08	0.0378145
3970753767739	397075	3767739	0.000920409	0	0.000122721	0.000122721	0.000429524	0	3.06803E-05	0	0.000245442	0	1.24826E-08	2.40912E-08	3.65739E-08	0.0365739
3971253767739	397125	3767739	0.000917695	0	0.000122359	0.000122359	0.000428258	0	3.05898E-05	0	0.000244719	0	1.24458E-08	2.40202E-08	3.6466E-08	0.036466
3971753767739	397175	3767739	0.000930009	0	0.000124001	0.000124001	0.000434004	0	3.10003E-05	0	0.000248002	0	1.26128E-08	2.43425E-08	3.69553E-08	0.0369553
3972253767739	397225	3767739	0.000931201	0	0.00012416	0.00012416	0.00043456	0	3.104E-05	0	0.00024832	0	1.2629E-08	2.43737E-08	3.70027E-08	0.0370027
3972753767739	397275	3767739	0.000927732	0	0.000123698	0.000123698	0.000432941	0	3.09244E-05	0	0.000247395	0	1.25819E-08	2.42829E-08	3.68648E-08	0.0368648
3973253767739	397325	3767739	0.000835425	0	0.00011139	0.00011139	0.000389865	0	2.78475E-05	0	0.00022278	0	1.13301E-08	2.18668E-08	3.31969E-08	0.0331969
3973753767739	397375	3767739	0.000703601	0	9.38134E-05	9.38134E-05	0.000328347	0	2.34534E-05	0	0.000187627	0	9.54227E-09	1.84164E-08	2.79586E-08	0.0279586

Garvey Reservoir Rehab - Mitigated Misc. Site Upgrades			Demolition - 2025	Demolition - 2026	ite Preparation - 202	ite Preparation - 202	Grading - 2025	Grading - 2026	nfrastructure - 2025	nfrastructure - 2026	Paving - 2025	itectural Coating - 2	Child Risk			
Unique Identifier	X (UTM)	Y (UTM)	2025	1900	2025	2026	1900	1900	2026	1900	2026	1900	3rd Trimester	0<2	Total	per million
3974253767739	397425	3767739	0.000574546	0	7.66062E-05	7.66062E-05	0.000268122	0	1.91515E-05	0	0.000153212	0	7.79203E-09	1.50384E-08	2.28305E-08	0.0228305
3974753767739	397475	3767739	0.000473029	0	6.30706E-05	6.30706E-05	0.000220747	0	1.57676E-05	0	0.000126141	0	6.41525E-09	1.23813E-08	1.87965E-08	0.0187965
3975253767739	397525	3767739	0.000380953	0	5.07937E-05	5.07937E-05	0.000177778	0	1.26984E-05	0	0.000101587	0	5.16651E-09	9.97124E-09	1.51377E-08	0.0151377
3964253767789	396425	3767789	0.000514087	0	6.85449E-05	6.85449E-05	0.000239907	0	1.71362E-05	0	0.00013709	0	6.97207E-09	1.34559E-08	2.0428E-08	0.020428
3964753767789	396475	3767789	0.000609163	0	8.12217E-05	8.12217E-05	0.000284276	0	2.03054E-05	0	0.000162443	0	8.2615E-09	1.59445E-08	2.4206E-08	0.024206
3965253767789	396525	3767789	0.000736256	0	9.81675E-05	9.81675E-05	0.000343586	0	2.45419E-05	0	0.000196335	0	9.98515E-09	1.92711E-08	2.92563E-08	0.0292563
3965753767789	396575	3767789	0.000898185	0	0.000119758	0.000119758	0.000419153	0	2.99395E-05	0	0.000239516	0	1.21812E-08	2.35095E-08	3.56907E-08	0.0356907
3966253767789	396625	3767789	0.001154895	0	0.000153986	0.000153986	0.000538951	0	3.84965E-05	0	0.000307972	0	1.56628E-08	3.02288E-08	4.58915E-08	0.0458915
3966753767789	396675	3767789	0.001480561	0	0.000197408	0.000197408	0.000690929	0	4.9352E-05	0	0.000394816	0	2.00795E-08	3.87529E-08	5.88323E-08	0.0588323
3967253767789	396725	3767789	0.001738695	0	0.000231826	0.000231826	0.000811391	0	5.79565E-05	0	0.000463652	0	2.35803E-08	4.55094E-08	6.90897E-08	0.0690897
3967753767789	396775	3767789	0.001765666	0	0.000235422	0.000235422	0.000823978	0	5.88555E-05	0	0.000470844	0	2.39461E-08	4.62153E-08	7.01614E-08	0.0701614
3968253767789	396825	3767789	0.001850797	0	0.000246773	0.000246773	0.000863705	0	6.16932E-05	0	0.000493546	0	2.51006E-08	4.84436E-08	7.35442E-08	0.0735442
3968753767789	396875	3767789	0.001858384	0	0.000247785	0.000247785	0.000867246	0	6.19461E-05	0	0.000495569	0	2.52035E-08	4.86422E-08	7.38457E-08	0.0738457
3969253767789	396925	3767789	0.001799317	0	0.000239909	0.000239909	0.000839681	0	5.99772E-05	0	0.000479818	0	2.44024E-08	4.70961E-08	7.14986E-08	0.0714986
3969753767789	396975	3767789	0.001683904	0	0.000224521	0.000224521	0.000785822	0	5.61301E-05	0	0.000449041	0	2.28372E-08	4.40753E-08	6.69125E-08	0.0669125
3970253767789	397025	3767789	0.00145929	0	0.000194572	0.000194572	0.000681002	0	4.8643E-05	0	0.000389144	0	1.9791E-08	3.81961E-08	5.79871E-08	0.0579871
3970753767789	397075	3767789	0.00135793	0	0.000181057	0.000181057	0.000633701	0	4.52643E-05	0	0.000362115	0	1.84163E-08	3.55431E-08	5.39594E-08	0.0539594
3971253767789	397125	3767789	0.001442459	0	0.000192328	0.000192328	0.000673148	0	4.8082E-05	0	0.000384656	0	1.95627E-08	3.77556E-08	5.73183E-08	0.0573183
3971753767789	397175	3767789	0.001524174	0	0.000203223	0.000203223	0.000711281	0	5.08058E-05	0	0.000406446	0	2.06709E-08	3.98944E-08	6.05653E-08	0.0605653
3972253767789	397225	3767789	0.001600135	0	0.000213351	0.000213351	0.00074673	0	5.33378E-05	0	0.000426703	0	2.17011E-08	4.18827E-08	6.35838E-08	0.0635838
3972753767789	397275	3767789	0.001702353	0	0.00022698	0.00022698	0.000794431	0	5.67451E-05	0	0.000453961	0	2.30874E-08	4.45582E-08	6.76456E-08	0.0676456
3973253767789	397325	3767789	0.001588444	0	0.000211793	0.000211793	0.000741274	0	5.29481E-05	0	0.000423585	0	2.15426E-08	4.15767E-08	6.31192E-08	0.0631192
3973753767789	397375	3767789	0.001217826	0	0.000162377	0.000162377	0.000568319	0	4.05942E-05	0	0.000324754	0	1.65162E-08	3.18759E-08	4.83922E-08	0.0483922
3974253767789	397425	3767789	0.000852621	0	0.000113683	0.000113683	0.00039789	0	2.84207E-05	0	0.000227365	0	1.15633E-08	2.23169E-08	3.38802E-08	0.0338802
3974753767789	397475	3767789	0.000620996	0	8.27995E-05	8.27995E-05	0.000289798	0	2.06999E-05	0	0.000165599	0	8.42199E-09	1.62542E-08	2.46762E-08	0.0246762
3975253767789	397525	3767789	0.000459833	0	6.13111E-05	6.13111E-05	0.000214589	0	1.53278E-05	0	0.000122622	0	6.23628E-09	1.20359E-08	1.82722E-08	0.0182722
3964253767839	396425	3767839	0.000613482	0	8.17976E-05	8.17976E-05	0.000286292	0	2.04494E-05	0	0.000163595	0	8.32008E-09	1.60576E-08	2.43776E-08	0.0243776
3964753767839	396475	3767839	0.000773894	0	0.000103186	0.000103186	0.000361151	0	2.57965E-05	0	0.000206372	0	1.04956E-08	2.02563E-08	3.07519E-08	0.0307519
3965253767839	396525	3767839	0.000969293	0	0.000129239	0.000129239	0.000452337	0	3.23098E-05	0	0.000258478	0	1.31456E-08	2.53707E-08	3.85163E-08	0.0385163
3965753767839	396575	3767839	0.001328841	0	0.000177179	0.000177179	0.000620126	0	4.42947E-05	0	0.000354358	0	1.80218E-08	3.47817E-08	5.28035E-08	0.0528035
3966253767839	396625	3767839	0.002333772	0	0.00031117	0.00031117	0.001089094	0	7.77924E-05	0	0.000622339	0	3.16508E-08	6.10852E-08	9.2736E-08	0.092736
3966753767839	396675	3767839	0.003892116	0	0.000518949	0.000518949	0.001816321	0	0.000129737	0	0.001037898	0	5.27851E-08	1.01874E-07	1.54659E-07	0.1546591
3967253767839	396725	3767839	0.003153126	0	0.000420417	0.000420417	0.001471459	0	0.000105104	0	0.000840834	0	4.27629E-08	8.25314E-08	1.25294E-07	0.1252942
3967753767839	396775	3767839	0.00466294	0	0.000621725	0.000621725	0.002176038	0	0.000155431	0	0.001243451	0	6.32391E-08	1.2205E-07	1.85289E-07	0.1852889
3968253767839	396825	3767839	0.003215014	0	0.000428669	0.000428669	0.00150034	0	0.000107167	0	0.000857337	0	4.36022E-08	8.41512E-08	1.27753E-07	0.1277535
3968753767839	396875	3767839	0.00461931	0	0.000615908	0.000615908	0.002155678	0	0.000153977	0	0.001231816	0	6.26473E-08	1.20908E-07	1.83555E-07	0.1835552
3969253767839	396925	3767839	0.003185718	0	0.000424762	0.000424762	0.001486669	0	0.000106191	0	0.000849525	0	4.32049E-08	8.33844E-08	1.26589E-07	0.1265893
3969753767839	396975	3767839	0.004087027	0	0.000544937	0.000544937	0.001907279	0	0.000136234	0	0.001089874	0	5.54285E-08	1.06976E-07	1.62404E-07	0.1624042
3970253767839	397025	3767839	0.002958613	0	0.000394482	0.000394482	0.001380686	0	9.86204E-05	0	0.000788964	0	4.01249E-08	7.74401E-08	1.17565E-07	0.117565
3970753767839	397075	3767839	0.002112563	0	0.000281675	0.000281675	0.000985863	0	7.04188E-05	0	0.00056335	0	2.86507E-08	5.52952E-08	8.39459E-08	0.0839459
3971253767839	397125	3767839	0.003733798	0	0.00049784	0.00049784	0.001742439	0	0.00012446	0	0.000995679	0	5.0638E-08	9.77301E-08	1.48368E-07	0.1483681
3971753767839	397175	3767839	0.003683983	0	0.000491198	0.000491198	0.001719192	0	0.000122799	0	0.000982396	0	4.99624E-08	9.64262E-08	1.46389E-07	0.1463886
3972253767839	397225	3767839	0.003916166	0	0.000522155	0.000522155	0.001827544	0	0.000130539	0	0.001044311	0	5.31113E-08	1.02504E-07	1.55615E-07	0.1556148
3972753767839	397275	3767839	0.003265634	0	0.000435418	0.000435418	0.001523962	0	0.000108854	0	0.000870836	0	4.42887E-08	8.54762E-08	1.29765E-07	0.1297649
3973253767839	397325	3767839	0.003250958	0	0.000433461	0.000433461	0.001517114	0	0.000108365	0	0.000866922	0	4.40897E-08	8.5092E-08	1.29182E-07	0.1291817
3973753767839	397375	3767839	0.002995137	0	0.000399352	0.000399352	0.001397731	0	9.98379E-05	0	0.000798703	0	4.06202E-08	7.83961E-08	1.19016E-07	0.1190163
3974753767839	397475	3767839	0.000818762	0	0.000109168	0.000109168	0.000382089	0	2.72921E-05	0	0.000218337	0	1.11041E-08	2.14306E-08	3.25347E-08	0.0325347
3975253767839	397525	3767839	0.00055363	0	7.38173E-05	7.38173E-05	0.000258361	0	1.84543E-05	0	0.000147635	0	7.50836E-09	1.4491E-08	2.19993E-08	0.0219993
3964253767889	396425	3767889	0.000737786	0	9.83715E-05	9.83715E-05	0.0003443	0	2.45929E-05	0	0.000196743	0	1.00059E-08	1.93111E-08	2.9317E-08	0.029317
3964753767889	396475	3767889	0.000997291	0	0.000132972	0.000132972	0.000465402	0	3.3243E-05	0	0.000265944	0	1.35253E-08	2.61035E-08	3.96288E-08	0.0396288
3965253767889	396525	3767889	0.001422142	0	0.000189619	0.000189619	0.000663666	0	4.74047E-05	0	0.000379238	0	1.92872E-08	3.72238E-08	5.65109E-08	0.0565109
3965753767889	396575	3767889	0.002114631	0	0.000281951	0.000281951	0.000986828	0	7.04877E-05	0	0.000563902	0	2.86787E-08	5.53493E-08	8.40281E-08	0.0840281
3974753767889	397475	3767889	0.001055083	0	0.000140678	0.000140678	0.000492372	0	3.51694E-05	0	0.000281355	0	1.43091E-08	2.76162E-08	4.19253E-08	0.0419253
3975253767889	397525	3767889	0.000653336	0	8.71114E-05	8.71114E-05	0.00030489	0	2.17779E-05	0	0.000174223	0	8.86057E-09	1.71007E-08	2.59613E-08	0.0259613
3964253767939	396425	3767939	0.000874718	0	0.000116629	0.000116629	0.000408202	0	2.91573E-05	0	0.000233258	0	1.1863E-08	2.28953E-08	3.47582E-08	0.0347582
3964753767939	396475	3767939	0.001380336	0	0.000184045	0.000184045	0.000644157	0	4.60112E-05	0	0.00036809	0	1.87202E-08	3.61295E-08	5.48497E-08	0.0548497
3965253767939	396525	3767939	0.00321667	0	0.000428889	0.000428889	0.001501112	0	0.000107222	0	0.000857779	0	4.36247E-08	8.41946E-08	1.27819E-07	0.1278192
3974753767939	397475	3767939	0.001119842	0	0.000149312	0.000149312	0.000522593	0	3.73281E-05	0	0.000298624	0	1.51874E-08	2.93112E-08	4.44986E-08	0.0444986
3975253767939	397525	3767939	0.000739832	0	9.86442E-05	9.86442E-05	0.000345255	0	2.46611E-05	0	0.000197288	0	1.00336E-08	1.93647E-08	2.93983E-08	0.0293983
3964253767989	396425	3767989	0.000995337	0	0.000132712	0.000132712	0.000464491	0	3.31779E-05	0	0.000265423	0	1.34988E-08	2.60524E-08	3.95512E-08	0.0395512
3964753767989	396475	3767989	0.001766897	0	0.000235586	0.000235586	0.000824552	0	5.88966E-05	0	0.000471172	0	2.39628E-08	4.62476E-08	7.02103E-08	0.0702103
3974753767989	397475	3767989	0.00119091	0	0.000158788	0.000158788	0.000555758	0	3.9697E-05	0	0.000317576	0	1.61512E-08	3.11714E-08	4.73226E-08	0.0473226
3975253767989	397525	3767989	0.000807972	0	0.00010773	0.00010773	0.000377054	0	2.69324E-05	0	0.000215459	0	1.09578E-08	2.11482E-08	3.2106E-08	0.032106
3964253768039	396425	3768039	0.001056774	0	0.000140903	0.000140903	0.000493161	0	3.52258E-05	0	0.000281806	0	1.4332E-08	2.76605E-08	4.19925E-08	0.0419925
3964753768039	396475	3768039	0.001926037	0	0.000256805	0.000256805	0.000898817	0	6.42012E-05	0	0.00051361	0	2.6121E-08	5.0413E-08	7.6534E-08	0.076534
3974753768039	397475	3768039	0.001375417	0	0.000183389	0.000183389	0.000641861	0	4.58472E-05	0	0.000366778	0	1.86535E-08	3.60008E-08	5.46543E-08	0.0546543
3975253768039	397525	3768039	0.000898352	0	0.00011978	0.00011978	0.000419231	0	2.99451E-05	0	0.000239561	0	1.21835E-08	2.35139E-08	3.56974E-08	0.0356974
3964253768089	396425	3768089	0.00107178	0	0.000142904	0.000142904	0.000500164	0	3.5726E-05	0	0.000285808	0	1.45355E-08	2.80533E-08	4.25888E-08	0.0425888
3964753768089	396475	3768089	0.001885289	0	0.000251372	0.000251372	0.000879801	0	6.2843E-05	0	0.000502744	0	2.55684E-08	4.93464E-08	7.49148E-08	0.0749148
3974753768089	397475	3768089	0.001547145	0	0.000206286	0.000206286	0.000722001	0	5.15715E-05	0	0.000412572	0	2.09825E-08	4.04957E-08	6.14781E-08	0.0614781
3975253768089	397525	3768089	0.00096199	0	0.000128265	0.000128265	0.000448929	0	3.20663E-05	0	0.000256531	0	1.30466E-08	2.51796E-08	3.82261E-08	0.0382261

Garvey Reservoir Rehab - Mitigated Misc. Site Upgrades			Demolition - 2025	Demolition - 2026	Site Preparation - 2025	Site Preparation - 202	Grading - 2025	Grading - 2026	Infrastructure - 2025	Infrastructure - 2026	Paving - 2025	Architectural Coating - 2	Child Risk			
Unique Identifier	X (UTM)	Y (UTM)	2025	1900	2025	2026	2026	1900	2026	1900	2026	1900	3rd Trimester	0<2	Total	per million
3964253768139	396425	3768139	0.001086975	0	0.00014493	0.00014493	0.000507255	0	3.62325E-05	0	0.00028986	0	1.47416E-08	2.8451E-08	4.31926E-08	0.0431926
3964753768139	396475	3768139	0.001801244	0	0.000240166	0.000240166	0.00084058	0	6.00415E-05	0	0.000480332	0	2.44286E-08	4.71466E-08	7.15751E-08	0.0715751
3974253768139	397425	3768139	0.00277474	0	0.000369965	0.000369965	0.001294879	0	9.24913E-05	0	0.000739931	0	3.76312E-08	7.26273E-08	1.10258E-07	0.1102585
3974753768139	397475	3768139	0.001538027	0	0.00020507	0.00020507	0.000717746	0	5.12676E-05	0	0.000410141	0	2.08588E-08	4.0257E-08	6.11158E-08	0.0611158
3975253768139	397525	3768139	0.000988741	0	0.000131832	0.000131832	0.000461412	0	3.2958E-05	0	0.000263664	0	1.34094E-08	2.58798E-08	3.92891E-08	0.0392891
3964253768189	396425	3768189	0.001058241	0	0.000141099	0.000141099	0.000493846	0	3.52747E-05	0	0.000282197	0	1.43519E-08	2.76989E-08	4.20508E-08	0.0420508
3964753768189	396475	3768189	0.001724329	0	0.000229911	0.000229911	0.000804687	0	5.74776E-05	0	0.000459821	0	2.33855E-08	4.51334E-08	6.85188E-08	0.0685188
3973753768189	397375	3768189	0.005794317	0	0.000772576	0.000772576	0.002704015	0	0.000193144	0	0.001545151	0	7.85829E-08	1.51663E-07	2.30246E-07	0.2302459
3974253768189	397425	3768189	0.002185056	0	0.000291341	0.000291341	0.001019693	0	7.28352E-05	0	0.000582682	0	2.96339E-08	5.71927E-08	8.68265E-08	0.0868265
3974753768189	397475	3768189	0.001423385	0	0.000189785	0.000189785	0.000664247	0	4.74462E-05	0	0.000379569	0	1.9304E-08	3.72563E-08	5.65604E-08	0.0565604
3975253768189	397525	3768189	0.000974419	0	0.000129923	0.000129923	0.000454729	0	3.24806E-05	0	0.000259845	0	1.32151E-08	2.55049E-08	3.872E-08	0.03872
3964253768239	396425	3768239	0.000998933	0	0.000133191	0.000133191	0.000466169	0	3.32978E-05	0	0.000266382	0	1.35476E-08	2.61465E-08	3.96941E-08	0.0396941
3964753768239	396475	3768239	0.001595266	0	0.000212702	0.000212702	0.000744457	0	5.31755E-05	0	0.000425404	0	2.16351E-08	4.17552E-08	6.33903E-08	0.0633903
3973753768239	397375	3768239	0.002681952	0	0.000357594	0.000357594	0.001251578	0	8.93984E-05	0	0.000715187	0	3.63728E-08	7.01986E-08	1.06571E-07	0.1065714
3974253768239	397425	3768239	0.001650192	0	0.000220026	0.000220026	0.000770089	0	5.50064E-05	0	0.000440051	0	2.238E-08	4.31929E-08	6.55729E-08	0.0655729
3974753768239	397475	3768239	0.001168724	0	0.00015583	0.00015583	0.000545404	0	3.89575E-05	0	0.00031166	0	1.58503E-08	3.05907E-08	4.6441E-08	0.046441
3975253768239	397525	3768239	0.000871519	0	0.000116203	0.000116203	0.000406709	0	2.90506E-05	0	0.000232405	0	1.18196E-08	2.28115E-08	3.46311E-08	0.0346311
3964253768289	396425	3768289	0.000907802	0	0.00012104	0.00012104	0.000423641	0	3.02601E-05	0	0.00024208	0	1.23117E-08	2.37612E-08	3.60729E-08	0.0360729
3964753768289	396475	3768289	0.001396854	0	0.000186247	0.000186247	0.000651865	0	4.65618E-05	0	0.000372494	0	1.89442E-08	3.65619E-08	5.55061E-08	0.0555061
3973253768289	397325	3768289	0.00201808	0	0.000269077	0.000269077	0.000941771	0	6.72693E-05	0	0.000538155	0	2.73693E-08	5.28222E-08	8.01915E-08	0.0801915
3973753768289	397375	3768289	0.001739238	0	0.000231898	0.000231898	0.000811644	0	5.79746E-05	0	0.000463797	0	2.35876E-08	4.55236E-08	6.91113E-08	0.0691113
3974253768289	397425	3768289	0.001419216	0	0.000189229	0.000189229	0.000662301	0	4.73072E-05	0	0.000378458	0	1.92475E-08	3.71472E-08	5.63947E-08	0.0563947
3974753768289	397475	3768289	0.001098334	0	0.000146445	0.000146445	0.000512556	0	3.66111E-05	0	0.000292889	0	1.48957E-08	2.87483E-08	4.3644E-08	0.043644
3975253768289	397525	3768289	0.000841891	0	0.000112252	0.000112252	0.000392882	0	2.8063E-05	0	0.000224504	0	1.14178E-08	2.2036E-08	3.34538E-08	0.0334538
3964253768339	396425	3768339	0.000820357	0	0.000109381	0.000109381	0.000382833	0	2.73452E-05	0	0.000218762	0	1.11257E-08	2.14724E-08	3.25981E-08	0.0325981
3964753768339	396475	3768339	0.001191737	0	0.000158898	0.000158898	0.000556144	0	3.97246E-05	0	0.000317797	0	1.61624E-08	3.11931E-08	4.73555E-08	0.0473555
3965253768339	396525	3768339	0.00209101	0	0.000278801	0.000278801	0.000975805	0	6.97003E-05	0	0.000557603	0	2.83584E-08	5.4731E-08	8.30894E-08	0.0830894
3972753768339	397275	3768339	0.001743816	0	0.000232509	0.000232509	0.000813781	0	5.81272E-05	0	0.000465018	0	2.36497E-08	4.56434E-08	6.92932E-08	0.0692932
3973253768339	397325	3768339	0.001523157	0	0.000203088	0.000203088	0.000710806	0	5.07719E-05	0	0.000406175	0	2.06571E-08	3.98678E-08	6.05249E-08	0.0605249
3973753768339	397375	3768339	0.00132674	0	0.000176899	0.000176899	0.000619145	0	4.42247E-05	0	0.000353797	0	1.79933E-08	3.47267E-08	5.272E-08	0.05272
3974253768339	397425	3768339	0.001137347	0	0.000151646	0.000151646	0.000530762	0	3.79116E-05	0	0.000303292	0	1.54248E-08	2.97694E-08	4.51942E-08	0.0451942
3974753768339	397475	3768339	0.000943987	0	0.000125865	0.000125865	0.000440527	0	3.14662E-05	0	0.00025173	0	1.28024E-08	2.47084E-08	3.75108E-08	0.0375108
3975253768339	397525	3768339	0.000771846	0	0.000102913	0.000102913	0.000360195	0	2.57282E-05	0	0.000205826	0	1.04678E-08	2.02026E-08	3.06705E-08	0.0306705
3964253768389	396425	3768389	0.000723492	0	9.64656E-05	9.64656E-05	0.00033763	0	2.41164E-05	0	0.000192931	0	9.81204E-09	1.8937E-08	2.8749E-08	0.028749
3964753768389	396475	3768389	0.001005383	0	0.000134051	0.000134051	0.000469179	0	3.35128E-05	0	0.000268102	0	1.36351E-08	2.63154E-08	3.99504E-08	0.0399504
3965253768389	396525	3768389	0.001560345	0	0.000208046	0.000208046	0.000728161	0	5.20115E-05	0	0.000416092	0	2.11615E-08	4.08412E-08	6.20026E-08	0.0620026
3972253768389	397225	3768389	0.001511671	0	0.000201556	0.000201556	0.000705446	0	5.0389E-05	0	0.000403112	0	2.05014E-08	3.95672E-08	6.00685E-08	0.0600685
3972753768389	397275	3768389	0.001357456	0	0.000180994	0.000180994	0.000633479	0	4.52485E-05	0	0.000361988	0	1.84099E-08	3.55307E-08	5.39405E-08	0.0539405
3973253768389	397325	3768389	0.001218376	0	0.00016245	0.00016245	0.000568575	0	4.06125E-05	0	0.0003249	0	1.65237E-08	3.18903E-08	4.8414E-08	0.048414
3973753768389	397375	3768389	0.001078716	0	0.000143829	0.000143829	0.000503401	0	3.59572E-05	0	0.000287658	0	1.46296E-08	2.82348E-08	4.28644E-08	0.0428644
3974253768389	397425	3768389	0.000941999	0	0.0001256	0.0001256	0.000439599	0	3.14E-05	0	0.0002512	0	1.27754E-08	2.46563E-08	3.74317E-08	0.0374317
3974753768389	397475	3768389	0.000809095	0	0.000107879	0.000107879	0.000377578	0	2.69698E-05	0	0.000215759	0	1.0973E-08	2.11776E-08	3.21506E-08	0.0321506
3975253768389	397525	3768389	0.00068419	0	9.12254E-05	9.12254E-05	0.000319289	0	2.28063E-05	0	0.000182451	0	9.27903E-09	1.79083E-08	2.71873E-08	0.0271873
3964253768439	396425	3768439	0.000640983	0	8.54644E-05	8.54644E-05	0.000299125	0	2.13661E-05	0	0.000170929	0	8.69304E-09	1.67774E-08	2.54704E-08	0.0254704
3964753768439	396475	3768439	0.000850476	0	0.000113397	0.000113397	0.000396889	0	2.83492E-05	0	0.000226794	0	1.15342E-08	2.22607E-08	3.37949E-08	0.0337949
3965253768439	396525	3768439	0.001207133	0	0.000160951	0.000160951	0.000563329	0	4.02378E-05	0	0.000321902	0	1.63712E-08	3.1596E-08	4.79672E-08	0.0479672
3971753768439	397175	3768439	0.00128821	0	0.000171761	0.000171761	0.000601165	0	4.29403E-05	0	0.000343523	0	1.74708E-08	3.37182E-08	5.1189E-08	0.051189
3972253768439	397225	3768439	0.00121565	0	0.000162087	0.000162087	0.000567303	0	4.05217E-05	0	0.000324173	0	1.64867E-08	3.1819E-08	4.83057E-08	0.0483057
3972753768439	397275	3768439	0.001108599	0	0.000147813	0.000147813	0.000517346	0	3.69533E-05	0	0.000295626	0	1.50349E-08	2.9017E-08	4.40519E-08	0.0440519
3973253768439	397325	3768439	0.001017711	0	0.000135695	0.000135695	0.000474932	0	3.39237E-05	0	0.00027139	0	1.38023E-08	2.6638E-08	4.04403E-08	0.0404403
3973753768439	397375	3768439	0.000920057	0	0.000122674	0.000122674	0.00042936	0	3.06686E-05	0	0.000245349	0	1.24779E-08	2.4082E-08	3.65599E-08	0.0365599
3974253768439	397425	3768439	0.000818889	0	0.000109185	0.000109185	0.000382148	0	2.72963E-05	0	0.00021837	0	1.11058E-08	2.1434E-08	3.25398E-08	0.0325398
3974753768439	397475	3768439	0.000710303	0	9.4707E-05	9.4707E-05	0.000331475	0	2.36768E-05	0	0.000189414	0	9.63316E-09	1.85918E-08	2.82249E-08	0.0282249
3975253768439	397525	3768439	0.000613745	0	8.18326E-05	8.18326E-05	0.000286414	0	2.04582E-05	0	0.000163665	0	8.32364E-09	1.60644E-08	2.43881E-08	0.0243881
3964253768489	396425	3768489	0.000559793	0	7.4639E-05	7.4639E-05	0.000261237	0	1.86598E-05	0	0.000149278	0	7.59194E-09	1.46523E-08	2.22442E-08	0.0222442
3964753768489	396475	3768489	0.000719374	0	9.59166E-05	9.59166E-05	0.000335708	0	2.39791E-05	0	0.000191833	0	9.7562E-09	1.88292E-08	2.85854E-08	0.0285854
3965253768489	396525	3768489	0.000969085	0	0.000129211	0.000129211	0.00045224	0	3.23028E-05	0	0.000258423	0	1.31428E-08	2.53653E-08	3.85081E-08	0.0385081
3970753768489	397075	3768489	0.001406994	0	0.000187599	0.000187599	0.000656597	0	4.68998E-05	0	0.000375198	0	1.90817E-08	3.68273E-08	5.5909E-08	0.055909
3971253768489	397125	3768489	0.00119514	0	0.000159352	0.000159352	0.000557732	0	3.9838E-05	0	0.000318704	0	1.62086E-08	3.12821E-08	4.74907E-08	0.0474907
3971753768489	397175	3768489	0.001075089	0	0.000143345	0.000143345	0.000501708	0	3.58363E-05	0	0.00028669	0	1.45804E-08	2.81399E-08	4.27203E-08	0.0427203
3972253768489	397225	3768489	0.001000967	0	0.000133462	0.000133462	0.000467118	0	3.33656E-05	0	0.000266925	0	1.35752E-08	2.61998E-08	3.9775E-08	0.039775
3972753768489	397275	3768489	0.00093957	0	0.000125276	0.000125276	0.000438466	0	3.1319E-05	0	0.000250552	0	1.27425E-08	2.45927E-08	3.73352E-08	0.0373352
3973253768489	397325	3768489	0.000866908	0	0.000115588	0.000115588	0.000404557	0	2.88969E-05	0	0.000231175	0	1.17571E-08	2.26908E-08	3.44479E-08	0.0344479
3973753768489	397375	3768489	0.000788612	0	0.000105148	0.000105148	0.000368019	0	2.62871E-05	0	0.000210297	0	1.06952E-08	2.06415E-08	3.13367E-08	0.0313367
3974253768489	397425	3768489	0.000710495	0	9.47326E-05	9.47326E-05	0.000331564	0	2.36832E-05	0	0.000189465	0	9.63577E-09	1.85968E-08	2.82326E-08	0.0282326
3974753768489	397475	3768489	0.000630818	0	8.41091E-05	8.41091E-05	0.000294382	0	2.10273E-05	0	0.000168218	0	8.55519E-09	1.65113E-08	2.50665E-08	0.0250665
3975253768489	397525	3768489	0.000558087	0	7.44116E-05	7.44116E-05	0.000260441	0	1.86029E-05	0	0.000148823	0	7.56881E-09	1.46076E-08	2.21764E-08	0.0221764
3964253768539	396425	3768539	0.000490223	0	6.53631E-05	6.53631E-05	0.000228771	0	1.63408E-05	0	0.000130726	0	6.64843E-09	1.28313E-08	1.94798E-08	0.0194798
3964753768539	396475	3768539	0.000614836	0	8.19782E-05	8.19782E-05	0.000286924	0	2.04945E-05	0	0.000163956	0	8.33844E-09	1.6093E-08	2.44314E-08	0.0244314
3965253768539	396525	3768539	0.000791528	0	0.000105537	0.000105537	0.00036938	0	2.63843E-05	0	0.000211074	0	1.07348E-08	2.07178E-08	3.14526E-08	0.0314526
3965753768539	396575	3768539	0.001070636	0	0.000142751	0.000142751	0.00049963	0	3.56879E-05	0	0.000285503	0	1.452E-08	2.80233E-08	4.25433E-08	0.0425433

Garvey Reservoir Rehab - Mitigated Misc. Site Upgrades			Demolition - 2025	Demolition - 2026	Site Preparation - 202	Site Preparation - 202	Grading - 2025	Grading - 2026	Infrastructure - 2025	Infrastructure - 2026	Paving - 2025	Architectural Coating -	Child Risk			
Unique Identifier	X (UTM)	Y (UTM)	2025	1900	2025	2026	2026	1900	2026	1900	2026	1900	3rd Trimester	0<2	Total	per million
3970253768539	397025	3768539	0.001670852	0	0.00022278	0.00022278	0.000779731	0	5.56951E-05	0	0.00044556	0	2.26602E-08	4.37336E-08	6.63938E-08	0.0663938
3970753768539	397075	3768539	0.001255089	0	0.000167345	0.000167345	0.000585708	0	4.18363E-05	0	0.000334691	0	1.70216E-08	3.28513E-08	4.98729E-08	0.0498729
3971253768539	397125	3768539	0.001052999	0	0.0001404	0.0001404	0.0004914	0	3.51E-05	0	0.0002808	0	1.42808E-08	2.75617E-08	4.18425E-08	0.0418425
3971753768539	397175	3768539	0.000941891	0	0.000125586	0.000125586	0.000439549	0	3.13964E-05	0	0.000251171	0	1.2774E-08	2.46535E-08	3.74275E-08	0.0374275
3972253768539	397225	3768539	0.00086363	0	0.000115151	0.000115151	0.000403028	0	2.87877E-05	0	0.000230301	0	1.17126E-08	2.26051E-08	3.43177E-08	0.0343177
3972753768539	397275	3768539	0.000817242	0	0.000108966	0.000108966	0.000381379	0	2.72414E-05	0	0.000217931	0	1.10835E-08	2.13909E-08	3.24743E-08	0.0324743
3973253768539	397325	3768539	0.000752778	0	0.00010037	0.00010037	0.000351296	0	2.50926E-05	0	0.000200741	0	1.02092E-08	1.97036E-08	2.99128E-08	0.0299128
3973753768539	397375	3768539	0.000689333	0	9.19111E-05	9.19111E-05	0.000321689	0	2.29778E-05	0	0.000183822	0	9.34877E-09	1.80429E-08	2.73917E-08	0.0273917
3974253768539	397425	3768539	0.000625198	0	8.33597E-05	8.33597E-05	0.000291759	0	2.08399E-05	0	0.000166719	0	8.47897E-09	1.63642E-08	2.48432E-08	0.0248432
3974753768539	397475	3768539	0.000562119	0	7.49492E-05	7.49492E-05	0.000262322	0	1.87373E-05	0	0.000149898	0	7.62349E-09	1.47132E-08	2.23366E-08	0.0223366
3975253768539	397525	3768539	0.000502559	0	6.70079E-05	6.70079E-05	0.000234528	0	1.6752E-05	0	0.000134016	0	6.81574E-09	1.31542E-08	1.997E-08	0.01997
3964253768589	396425	3768589	0.000429577	0	5.72769E-05	5.72769E-05	0.000200469	0	1.43192E-05	0	0.000114554	0	5.82595E-09	1.12439E-08	1.70699E-08	0.0170699
3964753768589	396475	3768589	0.000527471	0	7.03295E-05	7.03295E-05	0.000246153	0	1.75824E-05	0	0.000140659	0	7.15359E-09	1.38063E-08	2.09599E-08	0.0209599
3965253768589	396525	3768589	0.000658235	0	8.77647E-05	8.77647E-05	0.000307177	0	2.19412E-05	0	0.000175529	0	8.92703E-09	1.7229E-08	2.6156E-08	0.026156
3965753768589	396575	3768589	0.000835842	0	0.000111446	0.000111446	0.000390059	0	2.78614E-05	0	0.000222891	0	1.13357E-08	2.18777E-08	3.32134E-08	0.0332134
3966253768589	396625	3768589	0.001078147	0	0.000143753	0.000143753	0.000503135	0	3.59382E-05	0	0.000287506	0	1.46219E-08	2.82199E-08	4.28418E-08	0.0428418
3968253768589	396825	3768589	0.002784107	0	0.000371214	0.000371214	0.00129925	0	9.28036E-05	0	0.000742429	0	3.77582E-08	7.28725E-08	1.10631E-07	0.1106307
3968753768589	396875	3768589	0.003209078	0	0.000427877	0.000427877	0.00149757	0	0.000106969	0	0.000855754	0	4.35217E-08	8.39959E-08	1.27518E-07	0.1275176
3969253768589	396925	3768589	0.002712924	0	0.000361723	0.000361723	0.001266031	0	9.04308E-05	0	0.000723446	0	3.67928E-08	7.10093E-08	1.07802E-07	0.1078021
3969753768589	396975	3768589	0.002044561	0	0.000272608	0.000272608	0.000954128	0	6.8152E-05	0	0.000545216	0	2.77284E-08	5.35153E-08	8.12437E-08	0.0812437
3970253768589	397025	3768589	0.001463989	0	0.000195198	0.000195198	0.000683195	0	4.87996E-05	0	0.000390397	0	1.98547E-08	3.83191E-08	5.81738E-08	0.0581738
3970753768589	397075	3768589	0.001123076	0	0.000149743	0.000149743	0.000524102	0	3.74359E-05	0	0.000299487	0	1.52312E-08	2.93959E-08	4.46271E-08	0.0446271
3971253768589	397125	3768589	0.000955847	0	0.000127446	0.000127446	0.000446062	0	3.18616E-05	0	0.000254892	0	1.29632E-08	2.50188E-08	3.7982E-08	0.037982
3971753768589	397175	3768589	0.000846144	0	0.000112819	0.000112819	0.000394867	0	2.82048E-05	0	0.000225638	0	1.14755E-08	2.21474E-08	3.36228E-08	0.0336228
3972253768589	397225	3768589	0.000766206	0	0.000102161	0.000102161	0.000357563	0	2.55402E-05	0	0.000204322	0	1.03913E-08	2.0055E-08	3.04464E-08	0.0304464
3972753768589	397275	3768589	0.000705987	0	9.41316E-05	9.41316E-05	0.000329461	0	2.35329E-05	0	0.000188263	0	9.57464E-09	1.84788E-08	2.80535E-08	0.0280535
3973253768589	397325	3768589	0.000665672	0	8.87562E-05	8.87562E-05	0.000310647	0	2.21891E-05	0	0.000177512	0	9.02788E-09	1.74236E-08	2.64515E-08	0.0264515
3973753768589	397375	3768589	0.000612144	0	8.16192E-05	8.16192E-05	0.000285667	0	2.04048E-05	0	0.000163238	0	8.30193E-09	1.60225E-08	2.43245E-08	0.0243245
3974253768589	397425	3768589	0.000557317	0	7.4309E-05	7.4309E-05	0.000260081	0	1.85772E-05	0	0.000148618	0	7.55837E-09	1.45875E-08	2.21458E-08	0.0221458
3974753768589	397475	3768589	0.000505209	0	6.73613E-05	6.73613E-05	0.000235764	0	1.68403E-05	0	0.000134723	0	6.85168E-09	1.32236E-08	2.00753E-08	0.0200753
3975253768589	397525	3768589	0.000456663	0	6.08884E-05	6.08884E-05	0.000213109	0	1.52221E-05	0	0.000121777	0	6.19328E-09	1.19529E-08	1.81462E-08	0.0181462
3964253768639	396425	3768639	0.000375711	0	5.00948E-05	5.00948E-05	0.000175332	0	1.25237E-05	0	0.00010019	0	5.09541E-09	9.83403E-09	1.49294E-08	0.0149294
3964753768639	396475	3768639	0.000455321	0	6.07094E-05	6.07094E-05	0.000212483	0	1.51774E-05	0	0.000121419	0	6.17508E-09	1.19178E-08	1.80929E-08	0.0180929
3965253768639	396525	3768639	0.000548047	0	7.30729E-05	7.30729E-05	0.000255755	0	1.82682E-05	0	0.000146146	0	7.43265E-09	1.43448E-08	2.17775E-08	0.0217775
3965753768639	396575	3768639	0.00067145	0	8.95267E-05	8.95267E-05	0.000313343	0	2.23817E-05	0	0.000179053	0	9.10624E-09	1.75748E-08	2.66811E-08	0.0266811
3966253768639	396625	3768639	0.000826736	0	0.000110231	0.000110231	0.00038581	0	2.75579E-05	0	0.000220463	0	1.12122E-08	2.16394E-08	3.28516E-08	0.0328516
3966753768639	396675	3768639	0.001012456	0	0.000134994	0.000134994	0.000472479	0	3.37485E-05	0	0.000269988	0	1.3731E-08	2.65005E-08	4.02315E-08	0.0402315
3967253768639	396725	3768639	0.00121894	0	0.000162525	0.000162525	0.000568839	0	4.06313E-05	0	0.000325051	0	1.65313E-08	3.19051E-08	4.84364E-08	0.0484364
3967753768639	396775	3768639	0.00143647	0	0.000191529	0.000191529	0.000670353	0	4.78823E-05	0	0.000383059	0	1.94815E-08	3.75988E-08	5.70803E-08	0.0570803
3968253768639	396825	3768639	0.001652488	0	0.000220332	0.000220332	0.000771161	0	5.50829E-05	0	0.000440664	0	2.24111E-08	4.3253E-08	6.56641E-08	0.0656641
3968753768639	396875	3768639	0.001763105	0	0.000235081	0.000235081	0.000822782	0	5.87702E-05	0	0.000470161	0	2.39113E-08	4.61483E-08	7.00596E-08	0.0700596
3969253768639	396925	3768639	0.001670525	0	0.000222737	0.000222737	0.000779578	0	5.56842E-05	0	0.000445473	0	2.26558E-08	4.37251E-08	6.63808E-08	0.0663808
3969753768639	396975	3768639	0.001454179	0	0.000193891	0.000193891	0.000678617	0	4.84726E-05	0	0.000387781	0	1.97217E-08	3.80624E-08	5.7784E-08	0.057784
3970253768639	397025	3768639	0.001189925	0	0.000158657	0.000158657	0.000555298	0	3.96642E-05	0	0.000317313	0	1.61378E-08	3.11456E-08	4.72835E-08	0.0472835
3970753768639	397075	3768639	0.000974153	0	0.000129887	0.000129887	0.000454605	0	3.24718E-05	0	0.000259774	0	1.32115E-08	2.54979E-08	3.87094E-08	0.0387094
3971253768639	397125	3768639	0.000822153	0	0.00010962	0.00010962	0.000383671	0	2.74051E-05	0	0.000219241	0	1.11501E-08	2.15194E-08	3.26695E-08	0.0326695
3971753768639	397175	3768639	0.000752283	0	0.000100304	0.000100304	0.000351065	0	2.50761E-05	0	0.000200609	0	1.02025E-08	1.96906E-08	2.98931E-08	0.0298931
3972253768639	397225	3768639	0.000686462	0	9.15282E-05	9.15282E-05	0.000320349	0	2.28821E-05	0	0.000183056	0	9.30983E-09	1.79678E-08	2.72776E-08	0.0272776
3972753768639	397275	3768639	0.000636174	0	8.48232E-05	8.48232E-05	0.000296881	0	2.12058E-05	0	0.000169646	0	8.62783E-09	1.66515E-08	2.52793E-08	0.0252793
3973253768639	397325	3768639	0.000594664	0	7.92886E-05	7.92886E-05	0.00027751	0	1.98221E-05	0	0.000158577	0	8.06487E-09	1.5565E-08	2.36299E-08	0.0236299
3973753768639	397375	3768639	0.000549069	0	7.32092E-05	7.32092E-05	0.000256232	0	1.83023E-05	0	0.000146418	0	7.4465E-09	1.43716E-08	2.18181E-08	0.0218181
3974253768639	397425	3768639	0.000507	0	6.76E-05	6.76E-05	0.0002366	0	1.69E-05	0	0.0001352	0	6.87596E-09	1.32704E-08	2.01464E-08	0.0201464
3974753768639	397475	3768639	0.000458524	0	6.11365E-05	6.11365E-05	0.000213978	0	1.52841E-05	0	0.000122273	0	6.21852E-09	1.20016E-08	1.82201E-08	0.0182201
3975253768639	397525	3768639	0.000418304	0	5.57739E-05	5.57739E-05	0.000195209	0	1.39435E-05	0	0.000111548	0	5.67306E-09	1.09489E-08	1.66219E-08	0.0166219
3964253768689	396425	3768689	0.000331333	0	4.41778E-05	4.41778E-05	0.000154622	0	1.10444E-05	0	8.83556E-05	0	4.49356E-09	8.67247E-09	1.3166E-08	0.013166
3964753768689	396475	3768689	0.000396425	0	5.28567E-05	5.28567E-05	0.000184998	0	1.32142E-05	0	0.000105713	0	5.37634E-09	1.03762E-08	1.57525E-08	0.0157525
3965253768689	396525	3768689	0.000467772	0	6.23696E-05	6.23696E-05	0.000218294	0	1.55924E-05	0	0.000124739	0	6.34395E-09	1.22437E-08	1.85876E-08	0.0185876
3965753768689	396575	3768689	0.000555853	0	7.41138E-05	7.41138E-05	0.000259398	0	1.85284E-05	0	0.000148228	0	7.53851E-09	1.45492E-08	2.20877E-08	0.0220877
3966253768689	396625	3768689	0.000659191	0	8.78921E-05	8.78921E-05	0.000307622	0	2.1973E-05	0	0.000175784	0	8.93999E-09	1.7254E-08	2.6194E-08	0.026194
3966753768689	396675	3768689	0.000778098	0	0.000103746	0.000103746	0.000363112	0	2.59366E-05	0	0.000207493	0	1.05526E-08	2.03663E-08	3.09189E-08	0.0309189
3967253768689	396725	3768689	0.000896047	0	0.000119473	0.000119473	0.000418155	0	2.98682E-05	0	0.000238946	0	1.21522E-08	2.34535E-08	3.56058E-08	0.0356058
3967753768689	396775	3768689	0.00101274	0	0.000135032	0.000135032	0.000472612	0	3.3758E-05	0	0.000270064	0	1.37348E-08	2.65079E-08	4.02428E-08	0.0402428
3968253768689	396825	3768689	0.001112416	0	0.000148322	0.000148322	0.000519127	0	3.70805E-05	0	0.000296644	0	1.50866E-08	2.91169E-08	4.42035E-08	0.0442035
3968753768689	396875	3768689	0.001175388	0	0.000156718	0.000156718	0.000548514	0	3.91796E-05	0	0.000313437	0	1.59407E-08	3.07651E-08	4.67058E-08	0.0467058
3969253768689	396925	3768689	0.001155464	0	0.000154062	0.000154062	0.000539216	0	3.85155E-05	0	0.000308124	0	1.56705E-08	3.02436E-08	4.59141E-08	0.0459141
3969753768689	396975	3768689	0.001068172	0	0.000142423	0.000142423	0.00049848	0	3.56057E-05	0	0.000284846	0	1.44866E-08	2.79588E-08	4.24454E-08	0.0424454
3970253768689	397025	3768689	0.000951519	0	0.000126869	0.000126869	0.000444042	0	3.17173E-05	0	0.000253738	0	1.29046E-08	2.49055E-08	3.78101E-08	0.0378101
3970753768689	397075	3768689	0.00084143	0	0.000112191	0.000112191	0.000392667	0	2.80477E-05	0	0.000224381	0	1.14115E-08	2.2024E-08	3.34355E-08	0.0334355
3971253768689	397125	3768689	0.000725901	0	9.67867E-05	9.67867E-05	0.000338754	0	2.41967E-05	0	0.000193573	0	9.8447E-09	1.90001E-08	2.88448E-08	0.0288448
3971753768689	397175	3768689	0.000669215	0	8.92287E-05	8.92287E-05	0.0003123	0	2.23072E-05	0	0.000178457	0	9.07593E-09	1.75163E-08	2.65923E-08	0.0265923
3972253768689	397225	3768689	0.000619473	0	8.25964E-05	8.25964E-05	0.000289087	0	2.06491E-05	0	0.000165193	0	8.40133E-09	1.62144E-08	2.46157E-08	0.0246157

Garvey Reservoir Rehab - Mitigated Misc. Site Upgrades			Demolition - 2025	Demolition - 2026	Site Preparation - 2025	Site Preparation - 202	Grading - 2025	Grading - 2026	Infrastructure - 2025	Infrastructure - 2026	Paving - 2025	Architectural Coating - 2	Child Risk			
Unique Identifier	X (UTM)	Y (UTM)	2025	1900	2025	2026	2026	1900	2026	1900	2026	1900	3rd Trimester	0<2	Total	per million
3972753768689	397275	3768689	0.000573518	0	7.64691E-05	7.64691E-05	0.000267642	0	1.91173E-05	0	0.000152938	0	7.77809E-09	1.50115E-08	2.27896E-08	0.0227896
3973253768689	397325	3768689	0.000534762	0	7.13016E-05	7.13016E-05	0.000249556	0	1.78254E-05	0	0.000142603	0	7.25248E-09	1.39971E-08	2.12496E-08	0.0212496
3973753768689	397375	3768689	0.000498071	0	6.64095E-05	6.64095E-05	0.000232433	0	1.66024E-05	0	0.000132819	0	6.75487E-09	1.30367E-08	1.97916E-08	0.0197916
3974253768689	397425	3768689	0.000461425	0	6.15234E-05	6.15234E-05	0.000215332	0	1.53808E-05	0	0.000123047	0	6.25787E-09	1.20776E-08	1.83354E-08	0.0183354
3974753768689	397475	3768689	0.000425885	0	5.67847E-05	5.67847E-05	0.000198746	0	1.41962E-05	0	0.000113569	0	5.77588E-09	1.11473E-08	1.69232E-08	0.0169232
3975253768689	397525	3768689	0.000391281	0	5.21709E-05	5.21709E-05	0.000182598	0	1.30427E-05	0	0.000104342	0	5.30658E-09	1.02416E-08	1.55482E-08	0.0155482

Garvey Reservoir Rehab - Mitigated Misc. Site Upgrades

Offroad DPM Emissions, Ground Level Concentrations and Health Risk Calculations

Residential Receptors

Phase	Year	Emissions (lbs/day)	Meters	lbs/meter	meters (h1)	lbs/day (H1)	g/s (H1)	meters (h2)	lbs/day (H2)	g/s (H2)	hrs/day
Demolition - 2025	2025		1932.1	0	691.2	0	0	1240.9	0	0	10.00
Demolition - 2026	1900		1932.1	0	691.2	0	0	1240.9	0	0	10.00
Site Preparation - 2025	2025		1932.1	0	691.2	0	0	1240.9	0	0	10.00
Site Preparation - 2026	2026		1932.1	0	691.2	0	0	1240.9	0	0	10.00
Grading - 2025	2026		1932.1	0	691.2	0	0	1240.9	0	0	10.00
Grading - 2026	1900		1932.1	0	691.2	0	0	1240.9	0	0	10.00
Infrastructure - 2025	2026		1932.1	0	691.2	0	0	1240.9	0	0	10.00
Infrastructure - 2026	1900		1932.1	0	691.2	0	0	1240.9	0	0	10.00
Paving - 2025	2026		1932.1	0	691.2	0	0	1240.9	0	0	10.00
Architectural Coating - 2026	1900		1932.1	0	691.2	0	0	1240.9	0	0	10.00

		AERMOD Column Identifier:	*5*	*5*	*5*	*5*	*5*	*5*	*5*	*5*	*5*	*5*				
			6	*6*	*6*	*6*	*6*	*6*	*6*	*6*	*6*	*6*			*MAX:*	0
Garvey Reservoir Rehab - Mitigated Misc. Site Upgrades			Demolition - 2025	Demolition - 2026	Site Preparation - 2025	te Preparation - 202	Grading - 2025	Grading - 2026	Infrastructure - 2025	nfrastructure - 2026	Paving - 2025	rchitectural Coating - 202	Child Risk			
Unique Identifier	X (UTM)	Y (UTM)	2025	1900	2025	2026	2026	1900	2026	1900	2026	1900	3rd Trimester	0<2	Total	per million
396166.283767377.2	396166.28	3767377	0	0	0	0	0	0	0	0	0	0	0	0	0	0
396266.283767377.2	396266.28	3767377	0	0	0	0	0	0	0	0	0	0	0	0	0	0
396366.283767377.2	396366.28	3767377	0	0	0	0	0	0	0	0	0	0	0	0	0	0
396466.283767377.2	396466.28	3767377	0	0	0	0	0	0	0	0	0	0	0	0	0	0
396566.283767377.2	396566.28	3767377	0	0	0	0	0	0	0	0	0	0	0	0	0	0
396666.283767377.2	396666.28	3767377	0	0	0	0	0	0	0	0	0	0	0	0	0	0
396766.283767377.2	396766.28	3767377	0	0	0	0	0	0	0	0	0	0	0	0	0	0
396866.283767377.2	396866.28	3767377	0	0	0	0	0	0	0	0	0	0	0	0	0	0
396966.283767377.2	396966.28	3767377	0	0	0	0	0	0	0	0	0	0	0	0	0	0
397066.283767377.2	397066.28	3767377	0	0	0	0	0	0	0	0	0	0	0	0	0	0
397166.283767377.2	397166.28	3767377	0	0	0	0	0	0	0	0	0	0	0	0	0	0
397266.283767377.2	397266.28	3767377	0	0	0	0	0	0	0	0	0	0	0	0	0	0
397366.283767377.2	397366.28	3767377	0	0	0	0	0	0	0	0	0	0	0	0	0	0
397466.283767377.2	397466.28	3767377	0	0	0	0	0	0	0	0	0	0	0	0	0	0
397566.283767377.2	397566.28	3767377	0	0	0	0	0	0	0	0	0	0	0	0	0	0
397666.283767377.2	397666.28	3767377	0	0	0	0	0	0	0	0	0	0	0	0	0	0
397766.283767377.2	397766.28	3767377	0	0	0	0	0	0	0	0	0	0	0	0	0	0
397866.283767377.2	397866.28	3767377	0	0	0	0	0	0	0	0	0	0	0	0	0	0
396166.283767477.2	396166.28	3767477	0	0	0	0	0	0	0	0	0	0	0	0	0	0
396266.283767477.2	396266.28	3767477	0	0	0	0	0	0	0	0	0	0	0	0	0	0
396366.283767477.2	396366.28	3767477	0	0	0	0	0	0	0	0	0	0	0	0	0	0
396466.283767477.2	396466.28	3767477	0	0	0	0	0	0	0	0	0	0	0	0	0	0
396566.283767477.2	396566.28	3767477	0	0	0	0	0	0	0	0	0	0	0	0	0	0
396666.283767477.2	396666.28	3767477	0	0	0	0	0	0	0	0	0	0	0	0	0	0
396766.283767477.2	396766.28	3767477	0	0	0	0	0	0	0	0	0	0	0	0	0	0
396866.283767477.2	396866.28	3767477	0	0	0	0	0	0	0	0	0	0	0	0	0	0
396966.283767477.2	396966.28	3767477	0	0	0	0	0	0	0	0	0	0	0	0	0	0
397066.283767477.2	397066.28	3767477	0	0	0	0	0	0	0	0	0	0	0	0	0	0
397166.283767477.2	397166.28	3767477	0	0	0	0	0	0	0	0	0	0	0	0	0	0
397266.283767477.2	397266.28	3767477	0	0	0	0	0	0	0	0	0	0	0	0	0	0
397366.283767477.2	397366.28	3767477	0	0	0	0	0	0	0	0	0	0	0	0	0	0
397466.283767477.2	397466.28	3767477	0	0	0	0	0	0	0	0	0	0	0	0	0	0
397566.283767477.2	397566.28	3767477	0	0	0	0	0	0	0	0	0	0	0	0	0	0
397666.283767477.2	397666.28	3767477	0	0	0	0	0	0	0	0	0	0	0	0	0	0
397766.283767477.2	397766.28	3767477	0	0	0	0	0	0	0	0	0	0	0	0	0	0
397866.283767477.2	397866.28	3767477	0	0	0	0	0	0	0	0	0	0	0	0	0	0
396166.283767577.2	396166.28	3767577	0	0	0	0	0	0	0	0	0	0	0	0	0	0
396266.283767577.2	396266.28	3767577	0	0	0	0	0	0	0	0	0	0	0	0	0	0
396366.283767577.2	396366.28	3767577	0	0	0	0	0	0	0	0	0	0	0	0	0	0
396466.283767577.2	396466.28	3767577	0	0	0	0	0	0	0	0	0	0	0	0	0	0
396566.283767577.2	396566.28	3767577	0	0	0	0	0	0	0	0	0	0	0	0	0	0
396666.283767577.2	396666.28	3767577	0	0	0	0	0	0	0	0	0	0	0	0	0	0
396766.283767577.2	396766.28	3767577	0	0	0	0	0	0	0	0	0	0	0	0	0	0
396866.283767577.2	396866.28	3767577	0	0	0	0	0	0	0	0	0	0	0	0	0	0

Garvey Reservoir Rehab - Mitigated Misc. Site Upgrades			Demolition - 2025	Demolition - 2026	Site Preparation - 2025	te Preparation - 202	Grading - 2025	Grading - 2026	Infrastructure - 2025	nfrastructure - 2026	Paving - 2025	rchitectural Coating - 202	Child Risk			
Unique Identifier	X (UTM)	Y (UTM)	2025	1900	2025	2026	2026	1900	2026	1900	2026	1900	3rd Trimester	0<2	Total	per million
396966.283767577.2	396966.28	3767577	0	0	0	0	0	0	0	0	0	0	0	0	0	0
397066.283767577.2	397066.28	3767577	0	0	0	0	0	0	0	0	0	0	0	0	0	0
397166.283767577.2	397166.28	3767577	0	0	0	0	0	0	0	0	0	0	0	0	0	0
397266.283767577.2	397266.28	3767577	0	0	0	0	0	0	0	0	0	0	0	0	0	0
397366.283767577.2	397366.28	3767577	0	0	0	0	0	0	0	0	0	0	0	0	0	0
397466.283767577.2	397466.28	3767577	0	0	0	0	0	0	0	0	0	0	0	0	0	0
397566.283767577.2	397566.28	3767577	0	0	0	0	0	0	0	0	0	0	0	0	0	0
397666.283767577.2	397666.28	3767577	0	0	0	0	0	0	0	0	0	0	0	0	0	0
397766.283767577.2	397766.28	3767577	0	0	0	0	0	0	0	0	0	0	0	0	0	0
397866.283767577.2	397866.28	3767577	0	0	0	0	0	0	0	0	0	0	0	0	0	0
396166.283767677.2	396166.28	3767677	0	0	0	0	0	0	0	0	0	0	0	0	0	0
396266.283767677.2	396266.28	3767677	0	0	0	0	0	0	0	0	0	0	0	0	0	0
396366.283767677.2	396366.28	3767677	0	0	0	0	0	0	0	0	0	0	0	0	0	0
396466.283767677.2	396466.28	3767677	0	0	0	0	0	0	0	0	0	0	0	0	0	0
396566.283767677.2	396566.28	3767677	0	0	0	0	0	0	0	0	0	0	0	0	0	0
396666.283767677.2	396666.28	3767677	0	0	0	0	0	0	0	0	0	0	0	0	0	0
396766.283767677.2	396766.28	3767677	0	0	0	0	0	0	0	0	0	0	0	0	0	0
396866.283767677.2	396866.28	3767677	0	0	0	0	0	0	0	0	0	0	0	0	0	0
396966.283767677.2	396966.28	3767677	0	0	0	0	0	0	0	0	0	0	0	0	0	0
397066.283767677.2	397066.28	3767677	0	0	0	0	0	0	0	0	0	0	0	0	0	0
397166.283767677.2	397166.28	3767677	0	0	0	0	0	0	0	0	0	0	0	0	0	0
397266.283767677.2	397266.28	3767677	0	0	0	0	0	0	0	0	0	0	0	0	0	0
397366.283767677.2	397366.28	3767677	0	0	0	0	0	0	0	0	0	0	0	0	0	0
397466.283767677.2	397466.28	3767677	0	0	0	0	0	0	0	0	0	0	0	0	0	0
397566.283767677.2	397566.28	3767677	0	0	0	0	0	0	0	0	0	0	0	0	0	0
397666.283767677.2	397666.28	3767677	0	0	0	0	0	0	0	0	0	0	0	0	0	0
397766.283767677.2	397766.28	3767677	0	0	0	0	0	0	0	0	0	0	0	0	0	0
397866.283767677.2	397866.28	3767677	0	0	0	0	0	0	0	0	0	0	0	0	0	0
396166.283767777.2	396166.28	3767777	0	0	0	0	0	0	0	0	0	0	0	0	0	0
396266.283767777.2	396266.28	3767777	0	0	0	0	0	0	0	0	0	0	0	0	0	0
396366.283767777.2	396366.28	3767777	0	0	0	0	0	0	0	0	0	0	0	0	0	0
396466.283767777.2	396466.28	3767777	0	0	0	0	0	0	0	0	0	0	0	0	0	0
396566.283767777.2	396566.28	3767777	0	0	0	0	0	0	0	0	0	0	0	0	0	0
396666.283767777.2	396666.28	3767777	0	0	0	0	0	0	0	0	0	0	0	0	0	0
396766.283767777.2	396766.28	3767777	0	0	0	0	0	0	0	0	0	0	0	0	0	0
396866.283767777.2	396866.28	3767777	0	0	0	0	0	0	0	0	0	0	0	0	0	0
396966.283767777.2	396966.28	3767777	0	0	0	0	0	0	0	0	0	0	0	0	0	0
397066.283767777.2	397066.28	3767777	0	0	0	0	0	0	0	0	0	0	0	0	0	0
397166.283767777.2	397166.28	3767777	0	0	0	0	0	0	0	0	0	0	0	0	0	0
397266.283767777.2	397266.28	3767777	0	0	0	0	0	0	0	0	0	0	0	0	0	0
397366.283767777.2	397366.28	3767777	0	0	0	0	0	0	0	0	0	0	0	0	0	0
397466.283767777.2	397466.28	3767777	0	0	0	0	0	0	0	0	0	0	0	0	0	0
397566.283767777.2	397566.28	3767777	0	0	0	0	0	0	0	0	0	0	0	0	0	0
397666.283767777.2	397666.28	3767777	0	0	0	0	0	0	0	0	0	0	0	0	0	0
397766.283767777.2	397766.28	3767777	0	0	0	0	0	0	0	0	0	0	0	0	0	0
397866.283767777.2	397866.28	3767777	0	0	0	0	0	0	0	0	0	0	0	0	0	0
396166.283767877.2	396166.28	3767877	0	0	0	0	0	0	0	0	0	0	0	0	0	0
396266.283767877.2	396266.28	3767877	0	0	0	0	0	0	0	0	0	0	0	0	0	0
396366.283767877.2	396366.28	3767877	0	0	0	0	0	0	0	0	0	0	0	0	0	0
396466.283767877.2	396466.28	3767877	0	0	0	0	0	0	0	0	0	0	0	0	0	0
396566.283767877.2	396566.28	3767877	0	0	0	0	0	0	0	0	0	0	0	0	0	0
397466.283767877.2	397466.28	3767877	0	0	0	0	0	0	0	0	0	0	0	0	0	0
397566.283767877.2	397566.28	3767877	0	0	0	0	0	0	0	0	0	0	0	0	0	0
397666.283767877.2	397666.28	3767877	0	0	0	0	0	0	0	0	0	0	0	0	0	0
397766.283767877.2	397766.28	3767877	0	0	0	0	0	0	0	0	0	0	0	0	0	0
397866.283767877.2	397866.28	3767877	0	0	0	0	0	0	0	0	0	0	0	0	0	0
396166.283767977.2	396166.28	3767977	0	0	0	0	0	0	0	0	0	0	0	0	0	0
396266.283767977.2	396266.28	3767977	0	0	0	0	0	0	0	0	0	0	0	0	0	0
396366.283767977.2	396366.28	3767977	0	0	0	0	0	0	0	0	0	0	0	0	0	0
396466.283767977.2	396466.28	3767977	0	0	0	0	0	0	0	0	0	0	0	0	0	0
397466.283767977.2	397466.28	3767977	0	0	0	0	0	0	0	0	0	0	0	0	0	0
397566.283767977.2	397566.28	3767977	0	0	0	0	0	0	0	0	0	0	0	0	0	0
397666.283767977.2	397666.28	3767977	0	0	0	0	0	0	0	0	0	0	0	0	0	0
397766.283767977.2	397766.28	3767977	0	0	0	0	0	0	0	0	0	0	0	0	0	0
397866.283767977.2	397866.28	3767977	0	0	0	0	0	0	0	0	0	0	0	0	0	0
396166.283768077.2	396166.28	3768077	0	0	0	0	0	0	0	0	0	0	0	0	0	0
396266.283768077.2	396266.28	3768077	0	0	0	0	0	0	0	0	0	0	0	0	0	0
396366.283768077.2	396366.28	3768077	0	0	0	0	0	0	0	0	0	0	0	0	0	0
396466.283768077.2	396466.28	3768077	0	0	0	0	0	0	0	0	0	0	0	0	0	0
397466.283768077.2	397466.28	3768077	0	0	0	0	0	0	0	0	0	0	0	0	0	0
397566.283768077.2	397566.28	3768077	0	0	0	0	0	0	0	0	0	0	0	0	0	0

Garvey Reservoir Rehab - Mitigated Misc. Site Upgrades			Demolition - 2025	Demolition - 2026	Site Preparation - 2025	te Preparation - 202	Grading - 2025	Grading - 2026	Infrastructure - 2025	nfrastructure - 2026	Paving - 2025	rchitectural Coating - 202	Child Risk			
Unique Identifier	X (UTM)	Y (UTM)	2025	1900	2025	2026	2026	1900	2026	1900	2026	1900	3rd Trimester	0<2	Total	per million
397666.283768077.2	397666.28	3768077	0	0	0	0	0	0	0	0	0	0	0	0	0	0
397766.283768077.2	397766.28	3768077	0	0	0	0	0	0	0	0	0	0	0	0	0	0
397866.283768077.2	397866.28	3768077	0	0	0	0	0	0	0	0	0	0	0	0	0	0
396166.283768177.2	396166.28	3768177	0	0	0	0	0	0	0	0	0	0	0	0	0	0
396266.283768177.2	396266.28	3768177	0	0	0	0	0	0	0	0	0	0	0	0	0	0
396366.283768177.2	396366.28	3768177	0	0	0	0	0	0	0	0	0	0	0	0	0	0
396466.283768177.2	396466.28	3768177	0	0	0	0	0	0	0	0	0	0	0	0	0	0
397466.283768177.2	397466.28	3768177	0	0	0	0	0	0	0	0	0	0	0	0	0	0
397566.283768177.2	397566.28	3768177	0	0	0	0	0	0	0	0	0	0	0	0	0	0
397666.283768177.2	397666.28	3768177	0	0	0	0	0	0	0	0	0	0	0	0	0	0
397766.283768177.2	397766.28	3768177	0	0	0	0	0	0	0	0	0	0	0	0	0	0
397866.283768177.2	397866.28	3768177	0	0	0	0	0	0	0	0	0	0	0	0	0	0
396166.283768277.2	396166.28	3768277	0	0	0	0	0	0	0	0	0	0	0	0	0	0
396266.283768277.2	396266.28	3768277	0	0	0	0	0	0	0	0	0	0	0	0	0	0
396366.283768277.2	396366.28	3768277	0	0	0	0	0	0	0	0	0	0	0	0	0	0
396466.283768277.2	396466.28	3768277	0	0	0	0	0	0	0	0	0	0	0	0	0	0
397366.283768277.2	397366.28	3768277	0	0	0	0	0	0	0	0	0	0	0	0	0	0
397466.283768277.2	397466.28	3768277	0	0	0	0	0	0	0	0	0	0	0	0	0	0
397566.283768277.2	397566.28	3768277	0	0	0	0	0	0	0	0	0	0	0	0	0	0
397666.283768277.2	397666.28	3768277	0	0	0	0	0	0	0	0	0	0	0	0	0	0
397766.283768277.2	397766.28	3768277	0	0	0	0	0	0	0	0	0	0	0	0	0	0
397866.283768277.2	397866.28	3768277	0	0	0	0	0	0	0	0	0	0	0	0	0	0
396166.283768377.2	396166.28	3768377	0	0	0	0	0	0	0	0	0	0	0	0	0	0
396266.283768377.2	396266.28	3768377	0	0	0	0	0	0	0	0	0	0	0	0	0	0
396366.283768377.2	396366.28	3768377	0	0	0	0	0	0	0	0	0	0	0	0	0	0
396466.283768377.2	396466.28	3768377	0	0	0	0	0	0	0	0	0	0	0	0	0	0
397266.283768377.2	397266.28	3768377	0	0	0	0	0	0	0	0	0	0	0	0	0	0
397366.283768377.2	397366.28	3768377	0	0	0	0	0	0	0	0	0	0	0	0	0	0
397466.283768377.2	397466.28	3768377	0	0	0	0	0	0	0	0	0	0	0	0	0	0
397566.283768377.2	397566.28	3768377	0	0	0	0	0	0	0	0	0	0	0	0	0	0
397666.283768377.2	397666.28	3768377	0	0	0	0	0	0	0	0	0	0	0	0	0	0
397766.283768377.2	397766.28	3768377	0	0	0	0	0	0	0	0	0	0	0	0	0	0
397866.283768377.2	397866.28	3768377	0	0	0	0	0	0	0	0	0	0	0	0	0	0
396166.283768477.2	396166.28	3768477	0	0	0	0	0	0	0	0	0	0	0	0	0	0
396266.283768477.2	396266.28	3768477	0	0	0	0	0	0	0	0	0	0	0	0	0	0
396366.283768477.2	396366.28	3768477	0	0	0	0	0	0	0	0	0	0	0	0	0	0
396466.283768477.2	396466.28	3768477	0	0	0	0	0	0	0	0	0	0	0	0	0	0
397166.283768477.2	397166.28	3768477	0	0	0	0	0	0	0	0	0	0	0	0	0	0
397266.283768477.2	397266.28	3768477	0	0	0	0	0	0	0	0	0	0	0	0	0	0
397366.283768477.2	397366.28	3768477	0	0	0	0	0	0	0	0	0	0	0	0	0	0
397466.283768477.2	397466.28	3768477	0	0	0	0	0	0	0	0	0	0	0	0	0	0
397566.283768477.2	397566.28	3768477	0	0	0	0	0	0	0	0	0	0	0	0	0	0
397666.283768477.2	397666.28	3768477	0	0	0	0	0	0	0	0	0	0	0	0	0	0
397766.283768477.2	397766.28	3768477	0	0	0	0	0	0	0	0	0	0	0	0	0	0
397866.283768477.2	397866.28	3768477	0	0	0	0	0	0	0	0	0	0	0	0	0	0
396166.283768577.2	396166.28	3768577	0	0	0	0	0	0	0	0	0	0	0	0	0	0
396266.283768577.2	396266.28	3768577	0	0	0	0	0	0	0	0	0	0	0	0	0	0
396366.283768577.2	396366.28	3768577	0	0	0	0	0	0	0	0	0	0	0	0	0	0
396466.283768577.2	396466.28	3768577	0	0	0	0	0	0	0	0	0	0	0	0	0	0
396566.283768577.2	396566.28	3768577	0	0	0	0	0	0	0	0	0	0	0	0	0	0
396866.283768577.2	396866.28	3768577	0	0	0	0	0	0	0	0	0	0	0	0	0	0
396966.283768577.2	396966.28	3768577	0	0	0	0	0	0	0	0	0	0	0	0	0	0
397066.283768577.2	397066.28	3768577	0	0	0	0	0	0	0	0	0	0	0	0	0	0
397166.283768577.2	397166.28	3768577	0	0	0	0	0	0	0	0	0	0	0	0	0	0
397266.283768577.2	397266.28	3768577	0	0	0	0	0	0	0	0	0	0	0	0	0	0
397366.283768577.2	397366.28	3768577	0	0	0	0	0	0	0	0	0	0	0	0	0	0
397466.283768577.2	397466.28	3768577	0	0	0	0	0	0	0	0	0	0	0	0	0	0
397566.283768577.2	397566.28	3768577	0	0	0	0	0	0	0	0	0	0	0	0	0	0
397666.283768577.2	397666.28	3768577	0	0	0	0	0	0	0	0	0	0	0	0	0	0
397766.283768577.2	397766.28	3768577	0	0	0	0	0	0	0	0	0	0	0	0	0	0
397866.283768577.2	397866.28	3768577	0	0	0	0	0	0	0	0	0	0	0	0	0	0
396166.283768677.2	396166.28	3768677	0	0	0	0	0	0	0	0	0	0	0	0	0	0
396266.283768677.2	396266.28	3768677	0	0	0	0	0	0	0	0	0	0	0	0	0	0
396366.283768677.2	396366.28	3768677	0	0	0	0	0	0	0	0	0	0	0	0	0	0
396466.283768677.2	396466.28	3768677	0	0	0	0	0	0	0	0	0	0	0	0	0	0
396566.283768677.2	396566.28	3768677	0	0	0	0	0	0	0	0	0	0	0	0	0	0
396666.283768677.2	396666.28	3768677	0	0	0	0	0	0	0	0	0	0	0	0	0	0
396766.283768677.2	396766.28	3768677	0	0	0	0	0	0	0	0	0	0	0	0	0	0
396866.283768677.2	396866.28	3768677	0	0	0	0	0	0	0	0	0	0	0	0	0	0
396966.283768677.2	396966.28	3768677	0	0	0	0	0	0	0	0	0	0	0	0	0	0
397066.283768677.2	397066.28	3768677	0	0	0	0	0	0	0	0	0	0	0	0	0	0

Garvey Reservoir Rehab - Mitigated Misc. Site Upgrades			Demolition - 2025	Demolition - 2026	Site Preparation - 2025	te Preparation - 202	Grading - 2025	Grading - 2026	Infrastructure - 2025	nfrastructure - 2026	Paving - 2025	rchitectural Coating - 202	Child Risk			
Unique Identifier	X (UTM)	Y (UTM)	2025	1900	2025	2026	2026	1900	2026	1900	2026	1900	3rd Trimester	0<2	Total	per million
397166.283768677.2	397166.28	3768677	0	0	0	0	0	0	0	0	0	0	0	0	0	0
397366.283768677.2	397366.28	3768677	0	0	0	0	0	0	0	0	0	0	0	0	0	0
397466.283768677.2	397466.28	3768677	0	0	0	0	0	0	0	0	0	0	0	0	0	0
397566.283768677.2	397566.28	3768677	0	0	0	0	0	0	0	0	0	0	0	0	0	0
397666.283768677.2	397666.28	3768677	0	0	0	0	0	0	0	0	0	0	0	0	0	0
397766.283768677.2	397766.28	3768677	0	0	0	0	0	0	0	0	0	0	0	0	0	0
397866.283768677.2	397866.28	3768677	0	0	0	0	0	0	0	0	0	0	0	0	0	0
396166.283768777.2	396166.28	3768777	0	0	0	0	0	0	0	0	0	0	0	0	0	0
396266.283768777.2	396266.28	3768777	0	0	0	0	0	0	0	0	0	0	0	0	0	0
396366.283768777.2	396366.28	3768777	0	0	0	0	0	0	0	0	0	0	0	0	0	0
396466.283768777.2	396466.28	3768777	0	0	0	0	0	0	0	0	0	0	0	0	0	0
396566.283768777.2	396566.28	3768777	0	0	0	0	0	0	0	0	0	0	0	0	0	0
396666.283768777.2	396666.28	3768777	0	0	0	0	0	0	0	0	0	0	0	0	0	0
396766.283768777.2	396766.28	3768777	0	0	0	0	0	0	0	0	0	0	0	0	0	0
396866.283768777.2	396866.28	3768777	0	0	0	0	0	0	0	0	0	0	0	0	0	0
396966.283768777.2	396966.28	3768777	0	0	0	0	0	0	0	0	0	0	0	0	0	0
397066.283768777.2	397066.28	3768777	0	0	0	0	0	0	0	0	0	0	0	0	0	0
397166.283768777.2	397166.28	3768777	0	0	0	0	0	0	0	0	0	0	0	0	0	0
397266.283768777.2	397266.28	3768777	0	0	0	0	0	0	0	0	0	0	0	0	0	0
397366.283768777.2	397366.28	3768777	0	0	0	0	0	0	0	0	0	0	0	0	0	0
397466.283768777.2	397466.28	3768777	0	0	0	0	0	0	0	0	0	0	0	0	0	0
397566.283768777.2	397566.28	3768777	0	0	0	0	0	0	0	0	0	0	0	0	0	0
397666.283768777.2	397666.28	3768777	0	0	0	0	0	0	0	0	0	0	0	0	0	0
397766.283768777.2	397766.28	3768777	0	0	0	0	0	0	0	0	0	0	0	0	0	0
397866.283768777.2	397866.28	3768777	0	0	0	0	0	0	0	0	0	0	0	0	0	0
396166.283768877.2	396166.28	3768877	0	0	0	0	0	0	0	0	0	0	0	0	0	0
396266.283768877.2	396266.28	3768877	0	0	0	0	0	0	0	0	0	0	0	0	0	0
396366.283768877.2	396366.28	3768877	0	0	0	0	0	0	0	0	0	0	0	0	0	0
396466.283768877.2	396466.28	3768877	0	0	0	0	0	0	0	0	0	0	0	0	0	0
396566.283768877.2	396566.28	3768877	0	0	0	0	0	0	0	0	0	0	0	0	0	0
396666.283768877.2	396666.28	3768877	0	0	0	0	0	0	0	0	0	0	0	0	0	0
396766.283768877.2	396766.28	3768877	0	0	0	0	0	0	0	0	0	0	0	0	0	0
396866.283768877.2	396866.28	3768877	0	0	0	0	0	0	0	0	0	0	0	0	0	0
396966.283768877.2	396966.28	3768877	0	0	0	0	0	0	0	0	0	0	0	0	0	0
397066.283768877.2	397066.28	3768877	0	0	0	0	0	0	0	0	0	0	0	0	0	0
397166.283768877.2	397166.28	3768877	0	0	0	0	0	0	0	0	0	0	0	0	0	0
397266.283768877.2	397266.28	3768877	0	0	0	0	0	0	0	0	0	0	0	0	0	0
397366.283768877.2	397366.28	3768877	0	0	0	0	0	0	0	0	0	0	0	0	0	0
397466.283768877.2	397466.28	3768877	0	0	0	0	0	0	0	0	0	0	0	0	0	0
397566.283768877.2	397566.28	3768877	0	0	0	0	0	0	0	0	0	0	0	0	0	0
397666.283768877.2	397666.28	3768877	0	0	0	0	0	0	0	0	0	0	0	0	0	0
397766.283768877.2	397766.28	3768877	0	0	0	0	0	0	0	0	0	0	0	0	0	0
397866.283768877.2	397866.28	3768877	0	0	0	0	0	0	0	0	0	0	0	0	0	0
3964253767739	396425	3767739	0	0	0	0	0	0	0	0	0	0	0	0	0	0
3964753767739	396475	3767739	0	0	0	0	0	0	0	0	0	0	0	0	0	0
3965253767739	396525	3767739	0	0	0	0	0	0	0	0	0	0	0	0	0	0
3965753767739	396575	3767739	0	0	0	0	0	0	0	0	0	0	0	0	0	0
3966253767739	396625	3767739	0	0	0	0	0	0	0	0	0	0	0	0	0	0
3966753767739	396675	3767739	0	0	0	0	0	0	0	0	0	0	0	0	0	0
3967253767739	396725	3767739	0	0	0	0	0	0	0	0	0	0	0	0	0	0
3967753767739	396775	3767739	0	0	0	0	0	0	0	0	0	0	0	0	0	0
3968253767739	396825	3767739	0	0	0	0	0	0	0	0	0	0	0	0	0	0
3968753767739	396875	3767739	0	0	0	0	0	0	0	0	0	0	0	0	0	0
3969253767739	396925	3767739	0	0	0	0	0	0	0	0	0	0	0	0	0	0
3969753767739	396975	3767739	0	0	0	0	0	0	0	0	0	0	0	0	0	0
3970253767739	397025	3767739	0	0	0	0	0	0	0	0	0	0	0	0	0	0
3970753767739	397075	3767739	0	0	0	0	0	0	0	0	0	0	0	0	0	0
3971253767739	397125	3767739	0	0	0	0	0	0	0	0	0	0	0	0	0	0
3971753767739	397175	3767739	0	0	0	0	0	0	0	0	0	0	0	0	0	0
3972253767739	397225	3767739	0	0	0	0	0	0	0	0	0	0	0	0	0	0
3972753767739	397275	3767739	0	0	0	0	0	0	0	0	0	0	0	0	0	0
3973253767739	397325	3767739	0	0	0	0	0	0	0	0	0	0	0	0	0	0
3973753767739	397375	3767739	0	0	0	0	0	0	0	0	0	0	0	0	0	0
3974253767739	397425	3767739	0	0	0	0	0	0	0	0	0	0	0	0	0	0
3974753767739	397475	3767739	0	0	0	0	0	0	0	0	0	0	0	0	0	0
3975253767739	397525	3767739	0	0	0	0	0	0	0	0	0	0	0	0	0	0
3964253767789	396425	3767789	0	0	0	0	0	0	0	0	0	0	0	0	0	0
3964753767789	396475	3767789	0	0	0	0	0	0	0	0	0	0	0	0	0	0
3965253767789	396525	3767789	0	0	0	0	0	0	0	0	0	0	0	0	0	0
3965753767789	396575	3767789	0	0	0	0	0	0	0	0	0	0	0	0	0	0
3966253767789	396625	3767789	0	0	0	0	0	0	0	0	0	0	0	0	0	0

Garvey Reservoir Rehab - Mitigated Misc. Site Upgrades			Demolition - 2025	Demolition - 2026	Site Preparation - 2025	te Preparation - 202	Grading - 2025	Grading - 2026	Infrastructure - 2025	nfrastructure - 2026	Paving - 2025	rchitectural Coating - 202	Child Risk			
Unique Identifier	X (UTM)	Y (UTM)	2025	1900	2025	2026	2026	1900	2026	1900	2026	1900	3rd Trimester	0<2	Total	per million
3966753767789	396675	3767789	0	0	0	0	0	0	0	0	0	0	0	0	0	0
3967253767789	396725	3767789	0	0	0	0	0	0	0	0	0	0	0	0	0	0
3967753767789	396775	3767789	0	0	0	0	0	0	0	0	0	0	0	0	0	0
3968253767789	396825	3767789	0	0	0	0	0	0	0	0	0	0	0	0	0	0
3968753767789	396875	3767789	0	0	0	0	0	0	0	0	0	0	0	0	0	0
3969253767789	396925	3767789	0	0	0	0	0	0	0	0	0	0	0	0	0	0
3969753767789	396975	3767789	0	0	0	0	0	0	0	0	0	0	0	0	0	0
3970253767789	397025	3767789	0	0	0	0	0	0	0	0	0	0	0	0	0	0
3970753767789	397075	3767789	0	0	0	0	0	0	0	0	0	0	0	0	0	0
3971253767789	397125	3767789	0	0	0	0	0	0	0	0	0	0	0	0	0	0
3971753767789	397175	3767789	0	0	0	0	0	0	0	0	0	0	0	0	0	0
3972253767789	397225	3767789	0	0	0	0	0	0	0	0	0	0	0	0	0	0
3972753767789	397275	3767789	0	0	0	0	0	0	0	0	0	0	0	0	0	0
3973253767789	397325	3767789	0	0	0	0	0	0	0	0	0	0	0	0	0	0
3973753767789	397375	3767789	0	0	0	0	0	0	0	0	0	0	0	0	0	0
3974253767789	397425	3767789	0	0	0	0	0	0	0	0	0	0	0	0	0	0
3974753767789	397475	3767789	0	0	0	0	0	0	0	0	0	0	0	0	0	0
3975253767789	397525	3767789	0	0	0	0	0	0	0	0	0	0	0	0	0	0
3964253767839	396425	3767839	0	0	0	0	0	0	0	0	0	0	0	0	0	0
3964753767839	396475	3767839	0	0	0	0	0	0	0	0	0	0	0	0	0	0
3965253767839	396525	3767839	0	0	0	0	0	0	0	0	0	0	0	0	0	0
3965753767839	396575	3767839	0	0	0	0	0	0	0	0	0	0	0	0	0	0
3966253767839	396625	3767839	0	0	0	0	0	0	0	0	0	0	0	0	0	0
3966753767839	396675	3767839	0	0	0	0	0	0	0	0	0	0	0	0	0	0
3967253767839	396725	3767839	0	0	0	0	0	0	0	0	0	0	0	0	0	0
3967753767839	396775	3767839	0	0	0	0	0	0	0	0	0	0	0	0	0	0
3968253767839	396825	3767839	0	0	0	0	0	0	0	0	0	0	0	0	0	0
3968753767839	396875	3767839	0	0	0	0	0	0	0	0	0	0	0	0	0	0
3969253767839	396925	3767839	0	0	0	0	0	0	0	0	0	0	0	0	0	0
3969753767839	396975	3767839	0	0	0	0	0	0	0	0	0	0	0	0	0	0
3970253767839	397025	3767839	0	0	0	0	0	0	0	0	0	0	0	0	0	0
3970753767839	397075	3767839	0	0	0	0	0	0	0	0	0	0	0	0	0	0
3971253767839	397125	3767839	0	0	0	0	0	0	0	0	0	0	0	0	0	0
3971753767839	397175	3767839	0	0	0	0	0	0	0	0	0	0	0	0	0	0
3972253767839	397225	3767839	0	0	0	0	0	0	0	0	0	0	0	0	0	0
3972753767839	397275	3767839	0	0	0	0	0	0	0	0	0	0	0	0	0	0
3973253767839	397325	3767839	0	0	0	0	0	0	0	0	0	0	0	0	0	0
3973753767839	397375	3767839	0	0	0	0	0	0	0	0	0	0	0	0	0	0
3974753767839	397475	3767839	0	0	0	0	0	0	0	0	0	0	0	0	0	0
3975253767839	397525	3767839	0	0	0	0	0	0	0	0	0	0	0	0	0	0
3964253767889	396425	3767889	0	0	0	0	0	0	0	0	0	0	0	0	0	0
3964753767889	396475	3767889	0	0	0	0	0	0	0	0	0	0	0	0	0	0
3965253767889	396525	3767889	0	0	0	0	0	0	0	0	0	0	0	0	0	0
3965753767889	396575	3767889	0	0	0	0	0	0	0	0	0	0	0	0	0	0
3974753767889	397475	3767889	0	0	0	0	0	0	0	0	0	0	0	0	0	0
3975253767889	397525	3767889	0	0	0	0	0	0	0	0	0	0	0	0	0	0
3964253767939	396425	3767939	0	0	0	0	0	0	0	0	0	0	0	0	0	0
3964753767939	396475	3767939	0	0	0	0	0	0	0	0	0	0	0	0	0	0
3965253767939	396525	3767939	0	0	0	0	0	0	0	0	0	0	0	0	0	0
3974753767939	397475	3767939	0	0	0	0	0	0	0	0	0	0	0	0	0	0
3975253767939	397525	3767939	0	0	0	0	0	0	0	0	0	0	0	0	0	0
3964253767989	396425	3767989	0	0	0	0	0	0	0	0	0	0	0	0	0	0
3964753767989	396475	3767989	0	0	0	0	0	0	0	0	0	0	0	0	0	0
3974753767989	397475	3767989	0	0	0	0	0	0	0	0	0	0	0	0	0	0
3975253767989	397525	3767989	0	0	0	0	0	0	0	0	0	0	0	0	0	0
3964253768039	396425	3768039	0	0	0	0	0	0	0	0	0	0	0	0	0	0
3964753768039	396475	3768039	0	0	0	0	0	0	0	0	0	0	0	0	0	0
3974753768039	397475	3768039	0	0	0	0	0	0	0	0	0	0	0	0	0	0
3975253768039	397525	3768039	0	0	0	0	0	0	0	0	0	0	0	0	0	0
3964253768089	396425	3768089	0	0	0	0	0	0	0	0	0	0	0	0	0	0
3964753768089	396475	3768089	0	0	0	0	0	0	0	0	0	0	0	0	0	0
3974753768089	397475	3768089	0	0	0	0	0	0	0	0	0	0	0	0	0	0
3975253768089	397525	3768089	0	0	0	0	0	0	0	0	0	0	0	0	0	0
3964253768139	396425	3768139	0	0	0	0	0	0	0	0	0	0	0	0	0	0
3964753768139	396475	3768139	0	0	0	0	0	0	0	0	0	0	0	0	0	0
3974253768139	397425	3768139	0	0	0	0	0	0	0	0	0	0	0	0	0	0
3974753768139	397475	3768139	0	0	0	0	0	0	0	0	0	0	0	0	0	0
3975253768139	397525	3768139	0	0	0	0	0	0	0	0	0	0	0	0	0	0
3964253768189	396425	3768189	0	0	0	0	0	0	0	0	0	0	0	0	0	0
3964753768189	396475	3768189	0	0	0	0	0	0	0	0	0	0	0	0	0	0
3973753768189	397375	3768189	0	0	0	0	0	0	0	0	0	0	0	0	0	0

Garvey Reservoir Rehab - Mitigated Misc. Site Upgrades			Demolition - 2025	Demolition - 2026	Site Preparation - 2025	te Preparation - 202	Grading - 2025	Grading - 2026	Infrastructure - 2025	nfrastructure - 2026	Paving - 2025	rchitectural Coating - 202	Child Risk			
Unique Identifier	X (UTM)	Y (UTM)	2025	1900	2025	2026	2026	1900	2026	1900	2026	1900	3rd Trimester	0<2	Total	per million
3974253768189	397425	3768189	0	0	0	0	0	0	0	0	0	0	0	0	0	0
3974753768189	397475	3768189	0	0	0	0	0	0	0	0	0	0	0	0	0	0
3975253768189	397525	3768189	0	0	0	0	0	0	0	0	0	0	0	0	0	0
3964253768239	396425	3768239	0	0	0	0	0	0	0	0	0	0	0	0	0	0
3964753768239	396475	3768239	0	0	0	0	0	0	0	0	0	0	0	0	0	0
3973753768239	397375	3768239	0	0	0	0	0	0	0	0	0	0	0	0	0	0
3974253768239	397425	3768239	0	0	0	0	0	0	0	0	0	0	0	0	0	0
3974753768239	397475	3768239	0	0	0	0	0	0	0	0	0	0	0	0	0	0
3975253768239	397525	3768239	0	0	0	0	0	0	0	0	0	0	0	0	0	0
3964253768289	396425	3768289	0	0	0	0	0	0	0	0	0	0	0	0	0	0
3964753768289	396475	3768289	0	0	0	0	0	0	0	0	0	0	0	0	0	0
3973253768289	397325	3768289	0	0	0	0	0	0	0	0	0	0	0	0	0	0
3973753768289	397375	3768289	0	0	0	0	0	0	0	0	0	0	0	0	0	0
3974253768289	397425	3768289	0	0	0	0	0	0	0	0	0	0	0	0	0	0
3974753768289	397475	3768289	0	0	0	0	0	0	0	0	0	0	0	0	0	0
3975253768289	397525	3768289	0	0	0	0	0	0	0	0	0	0	0	0	0	0
3964253768339	396425	3768339	0	0	0	0	0	0	0	0	0	0	0	0	0	0
3964753768339	396475	3768339	0	0	0	0	0	0	0	0	0	0	0	0	0	0
3965253768339	396525	3768339	0	0	0	0	0	0	0	0	0	0	0	0	0	0
3972753768339	397275	3768339	0	0	0	0	0	0	0	0	0	0	0	0	0	0
3973253768339	397325	3768339	0	0	0	0	0	0	0	0	0	0	0	0	0	0
3973753768339	397375	3768339	0	0	0	0	0	0	0	0	0	0	0	0	0	0
3974253768339	397425	3768339	0	0	0	0	0	0	0	0	0	0	0	0	0	0
3974753768339	397475	3768339	0	0	0	0	0	0	0	0	0	0	0	0	0	0
3975253768339	397525	3768339	0	0	0	0	0	0	0	0	0	0	0	0	0	0
3964253768389	396425	3768389	0	0	0	0	0	0	0	0	0	0	0	0	0	0
3964753768389	396475	3768389	0	0	0	0	0	0	0	0	0	0	0	0	0	0
3965253768389	396525	3768389	0	0	0	0	0	0	0	0	0	0	0	0	0	0
3972253768389	397225	3768389	0	0	0	0	0	0	0	0	0	0	0	0	0	0
3972753768389	397275	3768389	0	0	0	0	0	0	0	0	0	0	0	0	0	0
3973253768389	397325	3768389	0	0	0	0	0	0	0	0	0	0	0	0	0	0
3973753768389	397375	3768389	0	0	0	0	0	0	0	0	0	0	0	0	0	0
3974253768389	397425	3768389	0	0	0	0	0	0	0	0	0	0	0	0	0	0
3974753768389	397475	3768389	0	0	0	0	0	0	0	0	0	0	0	0	0	0
3975253768389	397525	3768389	0	0	0	0	0	0	0	0	0	0	0	0	0	0
3964253768439	396425	3768439	0	0	0	0	0	0	0	0	0	0	0	0	0	0
3964753768439	396475	3768439	0	0	0	0	0	0	0	0	0	0	0	0	0	0
3965253768439	396525	3768439	0	0	0	0	0	0	0	0	0	0	0	0	0	0
3971753768439	397175	3768439	0	0	0	0	0	0	0	0	0	0	0	0	0	0
3972253768439	397225	3768439	0	0	0	0	0	0	0	0	0	0	0	0	0	0
3972753768439	397275	3768439	0	0	0	0	0	0	0	0	0	0	0	0	0	0
3973253768439	397325	3768439	0	0	0	0	0	0	0	0	0	0	0	0	0	0
3973753768439	397375	3768439	0	0	0	0	0	0	0	0	0	0	0	0	0	0
3974253768439	397425	3768439	0	0	0	0	0	0	0	0	0	0	0	0	0	0
3974753768439	397475	3768439	0	0	0	0	0	0	0	0	0	0	0	0	0	0
3975253768439	397525	3768439	0	0	0	0	0	0	0	0	0	0	0	0	0	0
3964253768489	396425	3768489	0	0	0	0	0	0	0	0	0	0	0	0	0	0
3964753768489	396475	3768489	0	0	0	0	0	0	0	0	0	0	0	0	0	0
3965253768489	396525	3768489	0	0	0	0	0	0	0	0	0	0	0	0	0	0
3970753768489	397075	3768489	0	0	0	0	0	0	0	0	0	0	0	0	0	0
3971253768489	397125	3768489	0	0	0	0	0	0	0	0	0	0	0	0	0	0
3971753768489	397175	3768489	0	0	0	0	0	0	0	0	0	0	0	0	0	0
3972253768489	397225	3768489	0	0	0	0	0	0	0	0	0	0	0	0	0	0
3972753768489	397275	3768489	0	0	0	0	0	0	0	0	0	0	0	0	0	0
3973253768489	397325	3768489	0	0	0	0	0	0	0	0	0	0	0	0	0	0
3973753768489	397375	3768489	0	0	0	0	0	0	0	0	0	0	0	0	0	0
3974253768489	397425	3768489	0	0	0	0	0	0	0	0	0	0	0	0	0	0
3974753768489	397475	3768489	0	0	0	0	0	0	0	0	0	0	0	0	0	0
3975253768489	397525	3768489	0	0	0	0	0	0	0	0	0	0	0	0	0	0
3964253768539	396425	3768539	0	0	0	0	0	0	0	0	0	0	0	0	0	0
3964753768539	396475	3768539	0	0	0	0	0	0	0	0	0	0	0	0	0	0
3965253768539	396525	3768539	0	0	0	0	0	0	0	0	0	0	0	0	0	0
3965753768539	396575	3768539	0	0	0	0	0	0	0	0	0	0	0	0	0	0
3970253768539	397025	3768539	0	0	0	0	0	0	0	0	0	0	0	0	0	0
3970753768539	397075	3768539	0	0	0	0	0	0	0	0	0	0	0	0	0	0
3971253768539	397125	3768539	0	0	0	0	0	0	0	0	0	0	0	0	0	0
3971753768539	397175	3768539	0	0	0	0	0	0	0	0	0	0	0	0	0	0
3972253768539	397225	3768539	0	0	0	0	0	0	0	0	0	0	0	0	0	0
3972753768539	397275	3768539	0	0	0	0	0	0	0	0	0	0	0	0	0	0
3973253768539	397325	3768539	0	0	0	0	0	0	0	0	0	0	0	0	0	0
3973753768539	397375	3768539	0	0	0	0	0	0	0	0	0	0	0	0	0	0

Garvey Reservoir Rehab - Mitigated Misc. Site Upgrades			Demolition - 2025	Demolition - 2026	Site Preparation - 2025	te Preparation - 202	Grading - 2025	Grading - 2026	Infrastructure - 2025	nfrastructure - 2026	Paving - 2025	rchitectural Coating - 202	Child Risk			
Unique Identifier	X (UTM)	Y (UTM)	2025	1900	2025	2026	2026	1900	2026	1900	2026	1900	3rd Trimester	0<2	Total	per million
3974253768539	397425	3768539	0	0	0	0	0	0	0	0	0	0	0	0	0	0
3974753768539	397475	3768539	0	0	0	0	0	0	0	0	0	0	0	0	0	0
3975253768539	397525	3768539	0	0	0	0	0	0	0	0	0	0	0	0	0	0
3964253768589	396425	3768589	0	0	0	0	0	0	0	0	0	0	0	0	0	0
3964753768589	396475	3768589	0	0	0	0	0	0	0	0	0	0	0	0	0	0
3965253768589	396525	3768589	0	0	0	0	0	0	0	0	0	0	0	0	0	0
3965753768589	396575	3768589	0	0	0	0	0	0	0	0	0	0	0	0	0	0
3966253768589	396625	3768589	0	0	0	0	0	0	0	0	0	0	0	0	0	0
3968253768589	396825	3768589	0	0	0	0	0	0	0	0	0	0	0	0	0	0
3968753768589	396875	3768589	0	0	0	0	0	0	0	0	0	0	0	0	0	0
3969253768589	396925	3768589	0	0	0	0	0	0	0	0	0	0	0	0	0	0
3969753768589	396975	3768589	0	0	0	0	0	0	0	0	0	0	0	0	0	0
3970253768589	397025	3768589	0	0	0	0	0	0	0	0	0	0	0	0	0	0
3970753768589	397075	3768589	0	0	0	0	0	0	0	0	0	0	0	0	0	0
3971253768589	397125	3768589	0	0	0	0	0	0	0	0	0	0	0	0	0	0
3971753768589	397175	3768589	0	0	0	0	0	0	0	0	0	0	0	0	0	0
3972253768589	397225	3768589	0	0	0	0	0	0	0	0	0	0	0	0	0	0
3972753768589	397275	3768589	0	0	0	0	0	0	0	0	0	0	0	0	0	0
3973253768589	397325	3768589	0	0	0	0	0	0	0	0	0	0	0	0	0	0
3973753768589	397375	3768589	0	0	0	0	0	0	0	0	0	0	0	0	0	0
3974253768589	397425	3768589	0	0	0	0	0	0	0	0	0	0	0	0	0	0
3974753768589	397475	3768589	0	0	0	0	0	0	0	0	0	0	0	0	0	0
3975253768589	397525	3768589	0	0	0	0	0	0	0	0	0	0	0	0	0	0
3964253768639	396425	3768639	0	0	0	0	0	0	0	0	0	0	0	0	0	0
3964753768639	396475	3768639	0	0	0	0	0	0	0	0	0	0	0	0	0	0
3965253768639	396525	3768639	0	0	0	0	0	0	0	0	0	0	0	0	0	0
3965753768639	396575	3768639	0	0	0	0	0	0	0	0	0	0	0	0	0	0
3966253768639	396625	3768639	0	0	0	0	0	0	0	0	0	0	0	0	0	0
3966753768639	396675	3768639	0	0	0	0	0	0	0	0	0	0	0	0	0	0
3967253768639	396725	3768639	0	0	0	0	0	0	0	0	0	0	0	0	0	0
3967753768639	396775	3768639	0	0	0	0	0	0	0	0	0	0	0	0	0	0
3968253768639	396825	3768639	0	0	0	0	0	0	0	0	0	0	0	0	0	0
3968753768639	396875	3768639	0	0	0	0	0	0	0	0	0	0	0	0	0	0
3969253768639	396925	3768639	0	0	0	0	0	0	0	0	0	0	0	0	0	0
3969753768639	396975	3768639	0	0	0	0	0	0	0	0	0	0	0	0	0	0
3970253768639	397025	3768639	0	0	0	0	0	0	0	0	0	0	0	0	0	0
3970753768639	397075	3768639	0	0	0	0	0	0	0	0	0	0	0	0	0	0
3971253768639	397125	3768639	0	0	0	0	0	0	0	0	0	0	0	0	0	0
3971753768639	397175	3768639	0	0	0	0	0	0	0	0	0	0	0	0	0	0
3972253768639	397225	3768639	0	0	0	0	0	0	0	0	0	0	0	0	0	0
3972753768639	397275	3768639	0	0	0	0	0	0	0	0	0	0	0	0	0	0
3973253768639	397325	3768639	0	0	0	0	0	0	0	0	0	0	0	0	0	0
3973753768639	397375	3768639	0	0	0	0	0	0	0	0	0	0	0	0	0	0
3974253768639	397425	3768639	0	0	0	0	0	0	0	0	0	0	0	0	0	0
3974753768639	397475	3768639	0	0	0	0	0	0	0	0	0	0	0	0	0	0
3975253768639	397525	3768639	0	0	0	0	0	0	0	0	0	0	0	0	0	0
3964253768689	396425	3768689	0	0	0	0	0	0	0	0	0	0	0	0	0	0
3964753768689	396475	3768689	0	0	0	0	0	0	0	0	0	0	0	0	0	0
3965253768689	396525	3768689	0	0	0	0	0	0	0	0	0	0	0	0	0	0
3965753768689	396575	3768689	0	0	0	0	0	0	0	0	0	0	0	0	0	0
3966253768689	396625	3768689	0	0	0	0	0	0	0	0	0	0	0	0	0	0
3966753768689	396675	3768689	0	0	0	0	0	0	0	0	0	0	0	0	0	0
3967253768689	396725	3768689	0	0	0	0	0	0	0	0	0	0	0	0	0	0
3967753768689	396775	3768689	0	0	0	0	0	0	0	0	0	0	0	0	0	0
3968253768689	396825	3768689	0	0	0	0	0	0	0	0	0	0	0	0	0	0
3968753768689	396875	3768689	0	0	0	0	0	0	0	0	0	0	0	0	0	0
3969253768689	396925	3768689	0	0	0	0	0	0	0	0	0	0	0	0	0	0
3969753768689	396975	3768689	0	0	0	0	0	0	0	0	0	0	0	0	0	0
3970253768689	397025	3768689	0	0	0	0	0	0	0	0	0	0	0	0	0	0
3970753768689	397075	3768689	0	0	0	0	0	0	0	0	0	0	0	0	0	0
3971253768689	397125	3768689	0	0	0	0	0	0	0	0	0	0	0	0	0	0
3971753768689	397175	3768689	0	0	0	0	0	0	0	0	0	0	0	0	0	0
3972253768689	397225	3768689	0	0	0	0	0	0	0	0	0	0	0	0	0	0
3972753768689	397275	3768689	0	0	0	0	0	0	0	0	0	0	0	0	0	0
3973253768689	397325	3768689	0	0	0	0	0	0	0	0	0	0	0	0	0	0
3973753768689	397375	3768689	0	0	0	0	0	0	0	0	0	0	0	0	0	0
3974253768689	397425	3768689	0	0	0	0	0	0	0	0	0	0	0	0	0	0
3974753768689	397475	3768689	0	0	0	0	0	0	0	0	0	0	0	0	0	0
3975253768689	397525	3768689	0	0	0	0	0	0	0	0	0	0	0	0	0	0

Garvey Reservoir Rehab - Mitigated Misc. Site Upgrades

Maximum Individual Non-Cancer Impact Calculations - Sensitive Receptors (Maximum Impacted Senior Residential Receptor) (IMPACT AT ALL OTHER LOCATIONS ON THE PROJECT SITE WOULD BE LESS THAN SHOWN)

Maximum Non-cancer Chronic Hazards / Toxicological Endpoints*

Receptor Group	Pollutant	CREL[1]	CONC	WFrac	$CONC_{WF}$	HI		ALIM	BN	CVS	DEV	ENDC	EYE	HEM	IMMUN	KIDN	NS	REPRO	RESP	SK
Project:																				
MEI - Max	DPM	5.00E+00	6.57E-03	1.00E+00	6.57E-03	0.001		-	-	-	-	-	-	-	-	-	-	-	1.31E-03	-
							Total Risk				-			-				-	0.001	
							Threshold				1.00			1.00				1.00	1.00	
							Over?				NO			NO				NO	NO	

Notes:

1. California Air Resources Board, "Consolidated Table of OEHHA/ARB Approved Risk Assessment Health Values," "OEHHA/ARB Approved Chronic Reference Exposure Levels and Target Organs," "OEHHA/ARB Approved Acute Reference Exposure Levels and Target Organs," and "OEHHA/ARB Approved 8-Hour Reference Exposure Levels and Target Organs," http://www.arb.ca.gov/toxics/healthval/healthval.htm. Tables last updated: May 8, 2018. Downloaded: 08/14/18.

Source: ESA, 2020

Where:

$CONC_{WF}$	Pollutant Concentration ($\mu g/m^3$) multiplied by the weight fraction
CREL	Chronic Reference Exposure Level
HI	Hazard Index
MEI	Maximally Exposed Individual
WFrac	Weight fraction of speciated component

* Key to Toxicological Endpoints

ALIM	Alimentary Tract	EYE	Eye	NS	Nervous System
BN	Bone	HEM	Hematologic System	REPRO	Reproductive System
CVS	Cardiovascular System	IMMUN	Immune System	RESP	Respiratory System
DEV	Developmental System	KIDN	Kidney	SK	Skin
ENDC	Endocrine System				

Appendix C

AERMOD Output Files

```
** Lakes Environmental AERMOD MPI
**
****************************************
**
** AERMOD Input Produced by:
** AERMOD View Ver. 11.2.0
** Lakes Environmental Software Inc.
** Date: 3/4/2024
** File: C:\Lakes\Project Files\Garvey\Garvey.ADI
**
****************************************
**
**
****************************************
** AERMOD Control Pathway
****************************************
**
**
CO STARTING
   TITLEONE C:\Lakes\Project Files\Garvey\Garvey.isc
   MODELOPT DFAULT CONC
   AVERTIME PERIOD
   URBANOPT 9818605 LA_County_-_SCAQMD_website
   POLLUTID PM_10
   RUNORNOT RUN
   ERRORFIL Garvey.err
CO FINISHED
**
****************************************
** AERMOD Source Pathway
****************************************
**
**
SO STARTING
** Source Location **
** Source ID - Type - X Coord. - Y Coord. **
** ---------------------------------------------------------------------
** Line Source Represented by Separated Volume Sources (2W)
** LINE VOLUME Source ID = RESIV
** DESCRSRC Reservoir Cover and Liner
** PREFIX
** Length of Side = 20.00
** Configuration = Separated 2W
** Emission Rate = 1.0
** Vertical Dimension = 7.32
** SZINIT = 3.40
** Nodes = 21
** 396724.405, 3768378.862, 173.81, 3.66, 18.60
** 396702.356, 3768337.806, 173.57, 3.66, 18.60
** 396687.150, 3768282.305, 176.39, 3.66, 18.60
** 396704.637, 3768228.325, 175.13, 3.66, 18.60
** 396784.467, 3768113.521, 174.11, 3.66, 18.60
** 396820.201, 3768054.218, 176.53, 3.66, 18.60
** 396906.874, 3768026.088, 176.89, 3.66, 18.60
** 397039.165, 3768024.567, 175.79, 3.66, 18.60
** 397133.440, 3768024.567, 174.57, 3.66, 18.60
** 397183.620, 3768031.410, 176.03, 3.66, 18.60
** 397229.237, 3768066.383, 174.60, 3.66, 18.60
** 397260.409, 3768127.966, 176.85, 3.66, 18.60
```

```
** 397253.566, 3768184.988, 175.05, 3.66, 18.60
** 397227.716, 3768238.208, 174.73, 3.66, 18.60
** 397169.174, 3768268.620, 173.35, 3.66, 18.60
** 397046.007, 3768324.121, 175.78, 3.66, 18.60
** 396942.608, 3768370.499, 175.56, 3.66, 18.60
** 396853.654, 3768404.712, 173.61, 3.66, 18.60
** 396801.194, 3768416.116, 174.96, 3.66, 18.60
** 396762.419, 3768401.671, 175.28, 3.66, 18.60
** 396722.884, 3768378.102, 174.09, 3.66, 18.60
** ----------------------------------------------------------------------
   LOCATION L0001804     VOLUME   396719.673 3768370.052 175.29
   LOCATION L0001805     VOLUME   396701.458 3768334.529 174.15
   LOCATION L0001806     VOLUME   396690.889 3768295.950 174.80
   LOCATION L0001807     VOLUME   396695.117 3768257.711 174.66
   LOCATION L0001808     VOLUME   396709.838 3768220.845 175.14
   LOCATION L0001809     VOLUME   396732.674 3768188.005 174.95
   LOCATION L0001810     VOLUME   396755.510 3768155.164 174.82
   LOCATION L0001811     VOLUME   396778.347 3768122.323 174.52
   LOCATION L0001812     VOLUME   396799.578 3768088.443 174.92
   LOCATION L0001813     VOLUME   396820.241 3768054.205 176.79
   LOCATION L0001814     VOLUME   396858.287 3768041.857 173.52
   LOCATION L0001815     VOLUME   396896.334 3768029.509 174.36
   LOCATION L0001816     VOLUME   396935.790 3768025.755 175.32
   LOCATION L0001817     VOLUME   396975.788 3768025.295 175.31
   LOCATION L0001818     VOLUME   397015.785 3768024.836 175.29
   LOCATION L0001819     VOLUME   397055.784 3768024.567 175.27
   LOCATION L0001820     VOLUME   397095.784 3768024.567 176.05
   LOCATION L0001821     VOLUME   397135.762 3768024.884 174.86
   LOCATION L0001822     VOLUME   397175.395 3768030.288 175.27
   LOCATION L0001823     VOLUME   397208.777 3768050.697 174.76
   LOCATION L0001824     VOLUME   397235.658 3768079.069 174.48
   LOCATION L0001825     VOLUME   397253.723 3768114.757 174.89
   LOCATION L0001826     VOLUME   397257.407 3768152.982 174.60
   LOCATION L0001827     VOLUME   397250.174 3768191.972 174.80
   LOCATION L0001828     VOLUME   397232.698 3768227.953 175.64
   LOCATION L0001829     VOLUME   397202.338 3768251.392 174.81
   LOCATION L0001830     VOLUME   397166.778 3768269.700 175.01
   LOCATION L0001831     VOLUME   397130.309 3768286.133 175.17
   LOCATION L0001832     VOLUME   397093.841 3768302.566 175.30
   LOCATION L0001833     VOLUME   397057.372 3768319.000 175.33
   LOCATION L0001834     VOLUME   397020.884 3768335.389 175.54
   LOCATION L0001835     VOLUME   396984.387 3768351.759 175.52
   LOCATION L0001836     VOLUME   396947.891 3768368.129 175.78
   LOCATION L0001837     VOLUME   396910.678 3768382.779 175.20
   LOCATION L0001838     VOLUME   396873.344 3768397.139 174.68
   LOCATION L0001839     VOLUME   396835.182 3768408.727 174.29
   LOCATION L0001840     VOLUME   396796.304 3768414.294 175.67
   LOCATION L0001841     VOLUME   396759.121 3768399.704 174.89
   LOCATION L0001842     VOLUME   396724.763 3768379.222 175.85
** End of LINE VOLUME Source ID = RESIV
** ----------------------------------------------------------------------
** Line Source Represented by Separated Volume Sources (2W)
** LINE VOLUME Source ID = IO
** DESCRSRC IO Tower
** PREFIX
** Length of Side = 20.00
** Configuration = Separated 2W
** Emission Rate = 1.0
** Vertical Dimension = 7.32
```

```
** SZINIT = 3.40
** Nodes = 2
** 397204.908, 3768151.535, 162.78, 3.66, 18.60
** 397271.053, 3768150.775, 177.42, 3.66, 18.60
** ----------------------------------------------------------------------
   LOCATION L0001843     VOLUME   397214.907 3768151.420 162.83
   LOCATION L0001844     VOLUME   397254.904 3768150.961 173.73
** End of LINE VOLUME Source ID = IO
   LOCATION JS           VOLUME     397390.630  3768119.207      156.080
** DESCRSRC Junction Structure
   LOCATION FES          VOLUME     397357.100  3768117.100      155.610
** DESCRSRC Facility Electrical System
   LOCATION EG           VOLUME     397340.941  3768107.051      157.650
** DESCRSRC Emergency Generators
   LOCATION STT          VOLUME     397148.710  3768007.350      177.700
** DESCRSRC Surge Tank Telemetry
   LOCATION ABWQL        VOLUME     397366.390  3768104.470      155.700
** DESCRSRC Administration building and Water quality Laboratory Rehabilitation
   LOCATION PS           VOLUME     397406.564  3768080.566      162.830
** DESCRSRC Proposed Pump Station
** ----------------------------------------------------------------------
** Line Source Represented by Separated Volume Sources (2W)
** LINE VOLUME Source ID = MISC1
** DESCRSRC Repair Repave
** PREFIX
** Length of Side = 10.00
** Configuration = Separated 2W
** Emission Rate = 1.0
** Vertical Dimension = 7.32
** SZINIT = 3.40
** Nodes = 22
** 397354.434, 3768197.782, 154.43, 3.66, 9.30
** 397354.037, 3768171.982, 155.45, 3.66, 9.30
** 397341.732, 3768142.609, 157.53, 3.66, 9.30
** 397320.695, 3768106.093, 162.56, 3.66, 9.30
** 397288.544, 3768070.369, 168.38, 3.66, 9.30
** 397246.074, 3768041.394, 173.73, 3.66, 9.30
** 397219.083, 3768028.295, 176.95, 3.66, 9.30
** 397180.581, 3768017.182, 177.71, 3.66, 9.30
** 397157.163, 3768013.212, 177.39, 3.66, 9.30
** 397152.796, 3768012.815, 177.43, 3.66, 9.30
** 397157.163, 3767983.840, 179.56, 3.66, 9.30
** 397162.720, 3767970.345, 181.40, 3.66, 9.30
** 397173.040, 3767963.994, 182.62, 3.66, 9.30
** 397189.313, 3767959.628, 183.65, 3.66, 9.30
** 397221.861, 3767958.040, 186.49, 3.66, 9.30
** 397261.950, 3767957.246, 187.44, 3.66, 9.30
** 397273.858, 3767958.040, 187.42, 3.66, 9.30
** 397283.384, 3767964.788, 187.88, 3.66, 9.30
** 397292.117, 3767975.505, 189.07, 3.66, 9.30
** 397296.483, 3767984.237, 189.68, 3.66, 9.30
** 397297.674, 3767990.985, 189.65, 3.66, 9.30
** 397302.834, 3767995.351, 189.87, 3.66, 9.30
** ----------------------------------------------------------------------
   LOCATION L0001845     VOLUME   397354.357 3768192.782 154.28
   LOCATION L0001846     VOLUME   397354.049 3768172.785 155.27
   LOCATION L0001847     VOLUME   397346.619 3768154.276 156.66
   LOCATION L0001848     VOLUME   397338.062 3768136.240 158.77
   LOCATION L0001849     VOLUME   397328.079 3768118.910 160.93
```

```
   LOCATION L0001850     VOLUME   397317.211 3768102.221 163.37
   LOCATION L0001851     VOLUME   397303.832 3768087.355 165.59
   LOCATION L0001852     VOLUME   397290.452 3768072.489 167.89
   LOCATION L0001853     VOLUME   397274.379 3768060.705 170.03
   LOCATION L0001854     VOLUME   397257.858 3768049.434 172.13
   LOCATION L0001855     VOLUME   397240.915 3768038.890 174.32
   LOCATION L0001856     VOLUME   397222.922 3768030.158 176.46
   LOCATION L0001857     VOLUME   397203.967 3768023.932 177.35
   LOCATION L0001858     VOLUME   397184.751 3768018.385 177.33
   LOCATION L0001859     VOLUME   397165.142 3768014.565 177.68
   LOCATION L0001860     VOLUME   397153.917 3768005.377 177.92
   LOCATION L0001861     VOLUME   397156.897 3767985.600 179.40
   LOCATION L0001862     VOLUME   397165.807 3767968.445 181.28
   LOCATION L0001863     VOLUME   397184.154 3767961.012 184.08
   LOCATION L0001864     VOLUME   397203.955 3767958.913 185.72
   LOCATION L0001865     VOLUME   397223.933 3767957.999 186.89
   LOCATION L0001866     VOLUME   397243.929 3767957.603 187.24
   LOCATION L0001867     VOLUME   397263.921 3767957.378 187.49
   LOCATION L0001868     VOLUME   397282.052 3767963.844 187.77
   LOCATION L0001869     VOLUME   397294.148 3767979.568 189.39
** End of LINE VOLUME Source ID = MISC1
** ----------------------------------------------------------------------
** Line Source Represented by Separated Volume Sources (2W)
** LINE VOLUME Source ID = MISC2
** DESCRSRC Roadways
** PREFIX
** Length of Side = 10.00
** Configuration = Separated 2W
** Emission Rate = 1.0
** Vertical Dimension = 7.32
** SZINIT = 3.40
** Nodes = 46
** 397006.925, 3767863.820, 162.01, 3.66, 9.30
** 396995.519, 3767887.392, 165.62, 3.66, 9.30
** 396975.749, 3767915.526, 173.74, 3.66, 9.30
** 396959.780, 3767942.901, 178.19, 3.66, 9.30
** 396961.301, 3768016.659, 177.49, 3.66, 9.30
** 396901.991, 3768015.898, 176.60, 3.66, 9.30
** 396871.575, 3768021.221, 177.20, 3.66, 9.30
** 396842.680, 3768031.866, 177.27, 3.66, 9.30
** 396817.587, 3768050.116, 177.00, 3.66, 9.30
** 396781.849, 3768095.739, 177.20, 3.66, 9.30
** 396758.276, 3768129.957, 176.54, 3.66, 9.30
** 396731.663, 3768173.299, 176.66, 3.66, 9.30
** 396707.330, 3768209.038, 177.05, 3.66, 9.30
** 396690.602, 3768234.891, 177.09, 3.66, 9.30
** 396680.716, 3768271.390, 177.21, 3.66, 9.30
** 396679.956, 3768284.316, 177.25, 3.66, 9.30
** 396686.039, 3768334.502, 177.27, 3.66, 9.30
** 396698.206, 3768359.595, 177.00, 3.66, 9.30
** 396729.382, 3768391.532, 177.20, 3.66, 9.30
** 396752.193, 3768410.541, 177.19, 3.66, 9.30
** 396779.567, 3768419.666, 176.32, 3.66, 9.30
** 396821.389, 3768424.989, 177.25, 3.66, 9.30
** 396860.929, 3768414.343, 177.11, 3.66, 9.30
** 396904.272, 3768396.854, 176.64, 3.66, 9.30
** 396940.770, 3768380.126, 177.13, 3.66, 9.30
** 396968.145, 3768367.199, 177.07, 3.66, 9.30
** 397027.455, 3768339.825, 177.09, 3.66, 9.30
```

```
** 397059.392, 3768329.180, 176.94, 3.66, 9.30
** 397107.296, 3768306.368, 177.07, 3.66, 9.30
** 397149.878, 3768287.358, 176.89, 3.66, 9.30
** 397184.096, 3768272.911, 177.15, 3.66, 9.30
** 397216.032, 3768253.901, 177.17, 3.66, 9.30
** 397234.282, 3768237.933, 176.43, 3.66, 9.30
** 397254.812, 3768204.475, 177.06, 3.66, 9.30
** 397264.697, 3768180.143, 177.23, 3.66, 9.30
** 397264.697, 3768136.800, 176.71, 3.66, 9.30
** 397261.656, 3768117.791, 177.17, 3.66, 9.30
** 397255.573, 3768091.177, 177.23, 3.66, 9.30
** 397233.521, 3768057.720, 176.78, 3.66, 9.30
** 397207.668, 3768034.908, 176.94, 3.66, 9.30
** 397173.450, 3768019.700, 177.57, 3.66, 9.30
** 397146.076, 3768013.617, 177.23, 3.66, 9.30
** 397108.817, 3768013.617, 177.30, 3.66, 9.30
** 397073.079, 3768012.857, 176.90, 3.66, 9.30
** 396989.436, 3768014.377, 177.76, 3.66, 9.30
** 396966.624, 3768015.898, 177.50, 3.66, 9.30
** ----------------------------------------------------------------------
   LOCATION L0001870     VOLUME   397004.747 3767868.321 162.30
   LOCATION L0001871     VOLUME   396996.036 3767886.324 165.55
   LOCATION L0001872     VOLUME   396984.702 3767902.785 169.74
   LOCATION L0001873     VOLUME   396973.518 3767919.351 174.43
   LOCATION L0001874     VOLUME   396963.440 3767936.626 178.32
   LOCATION L0001875     VOLUME   396960.043 3767955.634 178.82
   LOCATION L0001876     VOLUME   396960.455 3767975.630 178.70
   LOCATION L0001877     VOLUME   396960.867 3767995.625 178.12
   LOCATION L0001878     VOLUME   396961.280 3768015.621 177.13
   LOCATION L0001879     VOLUME   396942.340 3768016.415 176.89
   LOCATION L0001880     VOLUME   396922.342 3768016.159 176.92
   LOCATION L0001881     VOLUME   396902.344 3768015.903 176.86
   LOCATION L0001882     VOLUME   396882.638 3768019.285 177.08
   LOCATION L0001883     VOLUME   396863.346 3768024.252 176.99
   LOCATION L0001884     VOLUME   396844.580 3768031.166 177.15
   LOCATION L0001885     VOLUME   396828.142 3768042.439 177.19
   LOCATION L0001886     VOLUME   396813.302 3768055.586 177.10
   LOCATION L0001887     VOLUME   396800.969 3768071.330 177.12
   LOCATION L0001888     VOLUME   396788.636 3768087.075 177.08
   LOCATION L0001889     VOLUME   396776.746 3768103.146 177.25
   LOCATION L0001890     VOLUME   396765.400 3768119.616 176.92
   LOCATION L0001891     VOLUME   396754.382 3768136.299 177.24
   LOCATION L0001892     VOLUME   396743.917 3768153.343 177.17
   LOCATION L0001893     VOLUME   396733.452 3768170.386 177.02
   LOCATION L0001894     VOLUME   396722.331 3768187.005 177.05
   LOCATION L0001895     VOLUME   396711.075 3768203.537 177.03
   LOCATION L0001896     VOLUME   396700.080 3768220.243 177.15
   LOCATION L0001897     VOLUME   396689.934 3768237.355 177.17
   LOCATION L0001898     VOLUME   396684.706 3768256.659 177.16
   LOCATION L0001899     VOLUME   396680.438 3768276.120 177.26
   LOCATION L0001900     VOLUME   396681.375 3768296.020 177.10
   LOCATION L0001901     VOLUME   396683.781 3768315.875 177.39
   LOCATION L0001902     VOLUME   396686.579 3768335.615 177.29
   LOCATION L0001903     VOLUME   396695.304 3768353.611 177.21
   LOCATION L0001904     VOLUME   396707.531 3768369.148 177.09
   LOCATION L0001905     VOLUME   396721.502 3768383.459 177.10
   LOCATION L0001906     VOLUME   396736.080 3768397.114 177.09
   LOCATION L0001907     VOLUME   396751.444 3768409.917 177.11
   LOCATION L0001908     VOLUME   396770.242 3768416.558 177.11
```

```
   LOCATION L0001909     VOLUME   396789.656 3768420.950 177.00
   LOCATION L0001910     VOLUME   396809.496 3768423.475 177.19
   LOCATION L0001911     VOLUME   396829.125 3768422.906 177.27
   LOCATION L0001912     VOLUME   396848.437 3768417.707 176.87
   LOCATION L0001913     VOLUME   396867.479 3768411.701 177.29
   LOCATION L0001914     VOLUME   396886.026 3768404.217 176.97
   LOCATION L0001915     VOLUME   396904.567 3768396.719 176.87
   LOCATION L0001916     VOLUME   396922.748 3768388.386 176.96
   LOCATION L0001917     VOLUME   396940.929 3768380.051 177.11
   LOCATION L0001918     VOLUME   396959.014 3768371.511 177.14
   LOCATION L0001919     VOLUME   396977.136 3768363.049 176.88
   LOCATION L0001920     VOLUME   396995.295 3768354.668 176.74
   LOCATION L0001921     VOLUME   397013.454 3768346.287 176.87
   LOCATION L0001922     VOLUME   397031.800 3768338.377 177.22
   LOCATION L0001923     VOLUME   397050.773 3768332.052 176.91
   LOCATION L0001924     VOLUME   397069.247 3768324.487 177.05
   LOCATION L0001925     VOLUME   397087.304 3768315.888 177.09
   LOCATION L0001926     VOLUME   397105.361 3768307.289 177.20
   LOCATION L0001927     VOLUME   397123.602 3768299.088 176.90
   LOCATION L0001928     VOLUME   397141.865 3768290.935 176.83
   LOCATION L0001929     VOLUME   397160.219 3768282.992 176.91
   LOCATION L0001930     VOLUME   397178.644 3768275.213 177.13
   LOCATION L0001931     VOLUME   397196.196 3768265.708 177.16
   LOCATION L0001932     VOLUME   397213.382 3768255.478 177.11
   LOCATION L0001933     VOLUME   397228.763 3768242.762 177.00
   LOCATION L0001934     VOLUME   397240.906 3768227.137 176.79
   LOCATION L0001935     VOLUME   397251.367 3768210.090 176.88
   LOCATION L0001936     VOLUME   397259.860 3768192.049 176.92
   LOCATION L0001937     VOLUME   397264.697 3768172.994 177.30
   LOCATION L0001938     VOLUME   397264.697 3768152.994 176.85
   LOCATION L0001939     VOLUME   397264.096 3768133.042 177.02
   LOCATION L0001940     VOLUME   397260.641 3768113.351 176.63
   LOCATION L0001941     VOLUME   397256.184 3768093.853 177.08
   LOCATION L0001942     VOLUME   397246.077 3768076.770 177.26
   LOCATION L0001943     VOLUME   397235.071 3768060.071 177.07
   LOCATION L0001944     VOLUME   397220.636 3768046.350 177.24
   LOCATION L0001945     VOLUME   397205.196 3768033.809 177.00
   LOCATION L0001946     VOLUME   397186.920 3768025.686 177.14
   LOCATION L0001947     VOLUME   397168.315 3768018.559 177.38
   LOCATION L0001948     VOLUME   397148.791 3768014.220 177.34
   LOCATION L0001949     VOLUME   397128.858 3768013.617 177.43
   LOCATION L0001950     VOLUME   397108.858 3768013.617 177.66
   LOCATION L0001951     VOLUME   397088.862 3768013.192 176.95
   LOCATION L0001952     VOLUME   397068.867 3768012.933 176.90
   LOCATION L0001953     VOLUME   397048.870 3768013.297 176.91
   LOCATION L0001954     VOLUME   397028.873 3768013.660 177.26
   LOCATION L0001955     VOLUME   397008.876 3768014.024 177.30
   LOCATION L0001956     VOLUME   396988.881 3768014.414 177.28
   LOCATION L0001957     VOLUME   396968.925 3768015.745 177.16
** End of LINE VOLUME Source ID = MISC2
** ----------------------------------------------------------------------
** Line Source Represented by Separated Volume Sources (2W)
** LINE VOLUME Source ID = MISC3
** DESCRSRC Roadway
** PREFIX
** Length of Side = 10.00
** Configuration = Separated 2W
** Emission Rate = 1.0
** Vertical Dimension = 7.32
```

```
** SZINIT = 3.40
** Nodes = 21
** 396670.072, 3768399.895, 177.58, 3.66, 9.30
** 396608.480, 3768375.563, 165.75, 3.66, 9.30
** 396569.700, 3768298.764, 162.00, 3.66, 9.30
** 396545.367, 3768240.213, 157.74, 3.66, 9.30
** 396541.565, 3768156.570, 156.63, 3.66, 9.30
** 396542.326, 3768101.062, 155.26, 3.66, 9.30
** 396537.313, 3768073.850, 149.64, 3.66, 9.30
** 396533.511, 3768028.651, 138.04, 3.66, 9.30
** 396548.766, 3767948.706, 131.02, 3.66, 9.30
** 396597.789, 3768014.967, 143.81, 3.66, 9.30
** 396633.285, 3768019.327, 144.82, 3.66, 9.30
** 396659.657, 3767990.075, 147.90, 3.66, 9.30
** 396671.184, 3767965.989, 143.47, 3.66, 9.30
** 396654.622, 3767932.945, 137.27, 3.66, 9.30
** 396628.909, 3767894.089, 130.79, 3.66, 9.30
** 396658.665, 3767862.299, 129.93, 3.66, 9.30
** 396667.790, 3767849.372, 132.07, 3.66, 9.30
** 396838.878, 3767847.852, 147.28, 3.66, 9.30
** 396924.042, 3767852.414, 153.65, 3.66, 9.30
** 396974.988, 3767856.976, 159.76, 3.66, 9.30
** 397000.081, 3767864.580, 161.96, 3.66, 9.30
** ----------------------------------------------------------------------
   LOCATION L0001958     VOLUME   396665.422 3768398.058 176.84
   LOCATION L0001959     VOLUME   396646.821 3768390.710 172.08
   LOCATION L0001960     VOLUME   396628.220 3768383.361 168.29
   LOCATION L0001961     VOLUME   396609.619 3768376.013 165.99
   LOCATION L0001962     VOLUME   396600.017 3768358.803 164.37
   LOCATION L0001963     VOLUME   396591.002 3768340.950 163.73
   LOCATION L0001964     VOLUME   396581.987 3768323.097 162.81
   LOCATION L0001965     VOLUME   396572.972 3768305.244 161.99
   LOCATION L0001966     VOLUME   396564.810 3768286.999 161.61
   LOCATION L0001967     VOLUME   396557.135 3768268.530 161.39
   LOCATION L0001968     VOLUME   396549.460 3768250.061 159.10
   LOCATION L0001969     VOLUME   396544.943 3768230.888 156.47
   LOCATION L0001970     VOLUME   396544.035 3768210.908 156.49
   LOCATION L0001971     VOLUME   396543.127 3768190.929 156.32
   LOCATION L0001972     VOLUME   396542.219 3768170.949 156.14
   LOCATION L0001973     VOLUME   396541.642 3768150.965 156.01
   LOCATION L0001974     VOLUME   396541.916 3768130.967 154.76
   LOCATION L0001975     VOLUME   396542.190 3768110.969 154.91
   LOCATION L0001976     VOLUME   396540.497 3768091.137 153.23
   LOCATION L0001977     VOLUME   396537.109 3768071.436 148.71
   LOCATION L0001978     VOLUME   396535.433 3768051.506 144.33
   LOCATION L0001979     VOLUME   396533.757 3768031.577 139.95
   LOCATION L0001980     VOLUME   396536.709 3768011.889 134.62
   LOCATION L0001981     VOLUME   396540.458 3767992.244 130.98
   LOCATION L0001982     VOLUME   396544.207 3767972.598 130.82
   LOCATION L0001983     VOLUME   396547.955 3767952.953 131.18
   LOCATION L0001984     VOLUME   396558.089 3767961.308 134.52
   LOCATION L0001985     VOLUME   396569.985 3767977.386 139.20
   LOCATION L0001986     VOLUME   396581.880 3767993.464 142.00
   LOCATION L0001987     VOLUME   396593.775 3768009.542 143.48
   LOCATION L0001988     VOLUME   396610.942 3768016.582 143.92
   LOCATION L0001989     VOLUME   396630.793 3768019.021 145.67
   LOCATION L0001990     VOLUME   396644.996 3768006.338 145.34
   LOCATION L0001991     VOLUME   396658.388 3767991.483 148.00
   LOCATION L0001992     VOLUME   396667.473 3767973.745 146.33
```

```
   LOCATION L0001993     VOLUME   396666.075 3767955.796 143.61
   LOCATION L0001994     VOLUME   396657.114 3767937.916 138.94
   LOCATION L0001995     VOLUME   396646.654 3767920.904 134.53
   LOCATION L0001996     VOLUME   396635.616 3767904.225 131.77
   LOCATION L0001997     VOLUME   396634.271 3767888.361 128.96
   LOCATION L0001998     VOLUME   396647.938 3767873.759 127.95
   LOCATION L0001999     VOLUME   396661.146 3767858.784 130.59
   LOCATION L0002000     VOLUME   396676.270 3767849.297 134.74
   LOCATION L0002001     VOLUME   396696.269 3767849.119 138.70
   LOCATION L0002002     VOLUME   396716.268 3767848.941 141.11
   LOCATION L0002003     VOLUME   396736.267 3767848.764 141.88
   LOCATION L0002004     VOLUME   396756.266 3767848.586 141.88
   LOCATION L0002005     VOLUME   396776.266 3767848.408 142.81
   LOCATION L0002006     VOLUME   396796.265 3767848.230 144.51
   LOCATION L0002007     VOLUME   396816.264 3767848.053 145.74
   LOCATION L0002008     VOLUME   396836.263 3767847.875 147.21
   LOCATION L0002009     VOLUME   396856.238 3767848.782 149.26
   LOCATION L0002010     VOLUME   396876.210 3767849.851 151.16
   LOCATION L0002011     VOLUME   396896.181 3767850.921 152.06
   LOCATION L0002012     VOLUME   396916.152 3767851.991 152.56
   LOCATION L0002013     VOLUME   396936.093 3767853.493 154.53
   LOCATION L0002014     VOLUME   396956.013 3767855.277 157.21
   LOCATION L0002015     VOLUME   396975.896 3767857.251 160.10
   LOCATION L0002016     VOLUME   396995.037 3767863.052 161.80
** End of LINE VOLUME Source ID = MISC3
** ----------------------------------------------------------------------
** Line Source Represented by Separated Volume Sources (2W)
** LINE VOLUME Source ID = MISC4
** DESCRSRC Road
** PREFIX
** Length of Side = 10.00
** Configuration = Separated 2W
** Emission Rate = 1.0
** Vertical Dimension = 7.32
** SZINIT = 3.40
** Nodes = 18
** 396674.085, 3768416.424, 177.77, 3.66, 9.30
** 396668.762, 3768452.925, 175.18, 3.66, 9.30
** 396681.689, 3768468.894, 174.88, 3.66, 9.30
** 396721.992, 3768484.863, 167.62, 3.66, 9.30
** 396775.222, 3768500.832, 158.88, 3.66, 9.30
** 396797.275, 3768509.197, 154.42, 3.66, 9.30
** 396830.733, 3768522.124, 149.19, 3.66, 9.30
** 396837.577, 3768528.968, 148.91, 3.66, 9.30
** 396861.911, 3768528.968, 148.50, 3.66, 9.30
** 396889.286, 3768535.051, 148.37, 3.66, 9.30
** 396926.548, 3768531.249, 146.73, 3.66, 9.30
** 396943.277, 3768509.197, 150.47, 3.66, 9.30
** 396944.037, 3768488.665, 154.02, 3.66, 9.30
** 396932.631, 3768468.133, 157.54, 3.66, 9.30
** 396921.985, 3768462.810, 158.85, 3.66, 9.30
** 396878.640, 3768497.790, 154.09, 3.66, 9.30
** 396859.630, 3768514.520, 149.48, 3.66, 9.30
** 396849.744, 3768527.447, 148.36, 3.66, 9.30
** ----------------------------------------------------------------------
   LOCATION L0002017     VOLUME   396673.363 3768421.372 177.77
   LOCATION L0002018     VOLUME   396670.477 3768441.163 177.68
   LOCATION L0002019     VOLUME   396673.867 3768459.231 176.42
   LOCATION L0002020     VOLUME   396688.725 3768471.681 173.49
```

```
   LOCATION L0002021     VOLUME   396707.318 3768479.049 170.74
   LOCATION L0002022     VOLUME   396726.031 3768486.074 167.14
   LOCATION L0002023     VOLUME   396745.187 3768491.821 163.86
   LOCATION L0002024     VOLUME   396764.344 3768497.568 160.38
   LOCATION L0002025     VOLUME   396783.303 3768503.897 156.73
   LOCATION L0002026     VOLUME   396801.992 3768511.019 153.78
   LOCATION L0002027     VOLUME   396820.648 3768518.227 150.96
   LOCATION L0002028     VOLUME   396837.230 3768528.621 148.59
   LOCATION L0002029     VOLUME   396857.086 3768528.968 147.83
   LOCATION L0002030     VOLUME   396876.725 3768532.260 148.00
   LOCATION L0002031     VOLUME   396896.382 3768534.327 148.50
   LOCATION L0002032     VOLUME   396916.278 3768532.297 147.58
   LOCATION L0002033     VOLUME   396932.396 3768523.539 147.52
   LOCATION L0002034     VOLUME   396943.351 3768507.200 149.61
   LOCATION L0002035     VOLUME   396943.332 3768487.396 153.14
   LOCATION L0002036     VOLUME   396933.619 3768469.913 157.12
   LOCATION L0002037     VOLUME   396917.268 3768466.617 158.80
   LOCATION L0002038     VOLUME   396901.704 3768479.178 156.78
   LOCATION L0002039     VOLUME   396886.140 3768491.738 154.30
   LOCATION L0002040     VOLUME   396870.861 3768504.636 151.89
   LOCATION L0002041     VOLUME   396856.568 3768518.523 148.89
** End of LINE VOLUME Source ID = MISC4
** ---------------------------------------------------------------------
** Line Source Represented by Separated Volume Sources (2W)
** LINE VOLUME Source ID = MISC5
** DESCRSRC Roadway
** PREFIX
** Length of Side = 10.00
** Configuration = Separated 2W
** Emission Rate = 1.0
** Vertical Dimension = 7.32
** SZINIT = 3.40
** Nodes = 9
** 396615.180, 3768031.382, 146.32, 3.66, 9.30
** 396628.600, 3768053.749, 151.26, 3.66, 9.30
** 396651.862, 3768092.220, 161.36, 3.66, 9.30
** 396656.335, 3768109.219, 162.31, 3.66, 9.30
** 396683.176, 3768127.112, 165.93, 3.66, 9.30
** 396693.017, 3768145.900, 168.80, 3.66, 9.30
** 396685.860, 3768159.321, 167.87, 3.66, 9.30
** 396659.914, 3768184.371, 165.98, 3.66, 9.30
** 396646.494, 3768261.314, 177.85, 3.66, 9.30
** ---------------------------------------------------------------------
   LOCATION L0002042     VOLUME   396617.753 3768035.669 147.27
   LOCATION L0002043     VOLUME   396628.042 3768052.819 151.34
   LOCATION L0002044     VOLUME   396638.388 3768069.936 155.62
   LOCATION L0002045     VOLUME   396648.736 3768087.050 159.74
   LOCATION L0002046     VOLUME   396655.414 3768105.719 162.22
   LOCATION L0002047     VOLUME   396669.965 3768118.305 163.97
   LOCATION L0002048     VOLUME   396685.089 3768130.765 166.40
   LOCATION L0002049     VOLUME   396691.646 3768148.471 168.57
   LOCATION L0002050     VOLUME   396680.317 3768164.672 167.36
   LOCATION L0002051     VOLUME   396665.929 3768178.564 165.58
   LOCATION L0002052     VOLUME   396657.914 3768195.837 166.93
   LOCATION L0002053     VOLUME   396654.478 3768215.540 170.75
   LOCATION L0002054     VOLUME   396651.041 3768235.242 174.67
   LOCATION L0002055     VOLUME   396647.605 3768254.945 177.59
** End of LINE VOLUME Source ID = MISC5
** ---------------------------------------------------------------------
```

```
** Line Source Represented by Separated Volume Sources (2W)
** LINE VOLUME Source ID = MISC7
** DESCRSRC Slope
** PREFIX
** Length of Side = 10.00
** Configuration = Separated 2W
** Emission Rate = 1.0
** Vertical Dimension = 7.32
** SZINIT = 3.40
** Nodes = 9
** 397327.045, 3768107.907, 162.13, 3.66, 9.30
** 397350.671, 3768088.127, 158.60, 3.66, 9.30
** 397340.781, 3768078.236, 160.95, 3.66, 9.30
** 397323.748, 3768094.720, 163.85, 3.66, 9.30
** 397311.111, 3768084.280, 166.01, 3.66, 9.30
** 397346.275, 3768050.215, 169.60, 3.66, 9.30
** 397373.748, 3768087.028, 159.93, 3.66, 9.30
** 397386.385, 3768069.995, 166.29, 3.66, 9.30
** 397356.166, 3768036.478, 176.55, 3.66, 9.30
** ----------------------------------------------------------------------
   LOCATION L0002056     VOLUME   397330.879 3768104.697 161.56
   LOCATION L0002057     VOLUME   397346.214 3768091.858 158.02
   LOCATION L0002058     VOLUME   397340.637 3768078.376 160.60
   LOCATION L0002059     VOLUME   397326.265 3768092.284 163.39
   LOCATION L0002060     VOLUME   397311.187 3768084.207 166.43
   LOCATION L0002061     VOLUME   397325.551 3768070.291 165.66
   LOCATION L0002062     VOLUME   397339.916 3768056.375 166.25
   LOCATION L0002063     VOLUME   397352.942 3768059.147 166.62
   LOCATION L0002064     VOLUME   397364.903 3768075.176 162.81
   LOCATION L0002065     VOLUME   397376.853 3768082.842 161.93
   LOCATION L0002066     VOLUME   397383.705 3768067.022 167.57
   LOCATION L0002067     VOLUME   397370.312 3768052.168 171.46
   LOCATION L0002068     VOLUME   397356.919 3768037.314 176.34
** End of LINE VOLUME Source ID = MISC7
** ----------------------------------------------------------------------
** Line Source Represented by Separated Volume Sources (2W)
** LINE VOLUME Source ID = MISC6
** DESCRSRC Roadway
** PREFIX
** Length of Side = 10.00
** Configuration = Separated 2W
** Emission Rate = 1.0
** Vertical Dimension = 7.32
** SZINIT = 3.40
** Nodes = 21
** 397116.606, 3767859.556, 144.61, 3.66, 9.30
** 397130.891, 3767864.501, 145.38, 3.66, 9.30
** 397144.078, 3767873.841, 147.47, 3.66, 9.30
** 397149.023, 3767882.633, 149.99, 3.66, 9.30
** 397150.672, 3767895.270, 152.30, 3.66, 9.30
** 397154.518, 3767899.665, 152.38, 3.66, 9.30
** 397159.463, 3767904.061, 154.88, 3.66, 9.30
** 397166.606, 3767904.061, 155.20, 3.66, 9.30
** 397178.694, 3767893.072, 158.23, 3.66, 9.30
** 397178.144, 3767877.688, 159.09, 3.66, 9.30
** 397185.287, 3767865.600, 159.29, 3.66, 9.30
** 397207.265, 3767860.105, 159.91, 3.66, 9.30
** 397229.792, 3767854.611, 159.55, 3.66, 9.30
** 397264.408, 3767849.666, 158.73, 3.66, 9.30
```

```
** 397283.089, 3767850.215, 161.61, 3.66, 9.30
** 397312.210, 3767846.918, 160.74, 3.66, 9.30
** 397327.045, 3767846.918, 160.37, 3.66, 9.30
** 397345.726, 3767850.215, 159.64, 3.66, 9.30
** 397372.100, 3767859.006, 156.93, 3.66, 9.30
** 397399.023, 3767867.797, 155.48, 3.66, 9.30
** 397414.957, 3767871.094, 156.62, 3.66, 9.30
** ----------------------------------------------------------------------
   LOCATION L0002069     VOLUME   397121.331 3767861.191 144.82
   LOCATION L0002070     VOLUME   397138.956 3767870.213 146.62
   LOCATION L0002071     VOLUME   397149.494 3767886.238 150.53
   LOCATION L0002072     VOLUME   397158.293 3767903.021 153.91
   LOCATION L0002073     VOLUME   397174.961 3767896.465 157.29
   LOCATION L0002074     VOLUME   397178.160 3767878.126 159.48
   LOCATION L0002075     VOLUME   397190.643 3767864.261 159.09
   LOCATION L0002076     VOLUME   397210.050 3767859.426 159.88
   LOCATION L0002077     VOLUME   397229.480 3767854.687 159.90
   LOCATION L0002078     VOLUME   397249.273 3767851.828 159.92
   LOCATION L0002079     VOLUME   397269.118 3767849.804 160.50
   LOCATION L0002080     VOLUME   397289.073 3767849.538 161.63
   LOCATION L0002081     VOLUME   397308.946 3767847.288 162.16
   LOCATION L0002082     VOLUME   397328.897 3767847.245 161.62
   LOCATION L0002083     VOLUME   397348.487 3767851.136 159.37
   LOCATION L0002084     VOLUME   397367.461 3767857.460 158.55
   LOCATION L0002085     VOLUME   397386.464 3767863.697 157.97
   LOCATION L0002086     VOLUME   397405.671 3767869.173 157.04
** End of LINE VOLUME Source ID = MISC6
** ----------------------------------------------------------------------
** Line Source Represented by Separated Volume Sources (2W)
** LINE VOLUME Source ID = HAUL1
** DESCRSRC Orange
** PREFIX
** Length of Side = 6.00
** Configuration = Separated 2W
** Emission Rate = 1.0
** Vertical Dimension = 7.32
** SZINIT = 3.40
** Nodes = 13
** 397357.103, 3768202.169, 154.20, 3.66, 5.58
** 397309.446, 3768282.694, 153.83, 3.66, 5.58
** 397293.012, 3768322.135, 153.64, 3.66, 5.58
** 397296.299, 3768425.667, 153.55, 3.66, 5.58
** 397296.299, 3768556.314, 149.24, 3.66, 5.58
** 397293.012, 3768617.940, 143.02, 3.66, 5.58
** 397284.692, 3768636.483, 140.85, 3.66, 5.58
** 397266.718, 3768670.528, 137.41, 3.66, 5.58
** 397264.253, 3768703.395, 135.46, 3.66, 5.58
** 397288.903, 3768773.238, 130.65, 3.66, 5.58
** 397323.414, 3768823.361, 125.85, 3.66, 5.58
** 397335.739, 3768843.081, 124.06, 3.66, 5.58
** 397334.918, 3768852.120, 123.73, 3.66, 5.58
** ----------------------------------------------------------------------
   LOCATION L0003711     VOLUME   397355.575 3768204.751 154.16
   LOCATION L0003712     VOLUME   397349.463 3768215.078 154.13
   LOCATION L0003713     VOLUME   397343.351 3768225.405 154.06
   LOCATION L0003714     VOLUME   397337.240 3768235.731 154.03
   LOCATION L0003715     VOLUME   397331.128 3768246.058 154.00
   LOCATION L0003716     VOLUME   397325.016 3768256.385 153.92
   LOCATION L0003717     VOLUME   397318.904 3768266.712 153.85
```

```
   LOCATION L0003718     VOLUME   397312.792 3768277.039 153.84
   LOCATION L0003719     VOLUME   397307.357 3768287.705 153.81
   LOCATION L0003720     VOLUME   397302.742 3768298.782 153.74
   LOCATION L0003721     VOLUME   397298.127 3768309.859 153.78
   LOCATION L0003722     VOLUME   397293.511 3768320.936 153.67
   LOCATION L0003723     VOLUME   397293.351 3768332.831 153.60
   LOCATION L0003724     VOLUME   397293.732 3768344.825 153.57
   LOCATION L0003725     VOLUME   397294.113 3768356.819 153.56
   LOCATION L0003726     VOLUME   397294.494 3768368.813 153.49
   LOCATION L0003727     VOLUME   397294.874 3768380.807 153.46
   LOCATION L0003728     VOLUME   397295.255 3768392.801 153.42
   LOCATION L0003729     VOLUME   397295.636 3768404.795 153.39
   LOCATION L0003730     VOLUME   397296.017 3768416.789 153.34
   LOCATION L0003731     VOLUME   397296.299 3768428.784 153.28
   LOCATION L0003732     VOLUME   397296.299 3768440.784 153.23
   LOCATION L0003733     VOLUME   397296.299 3768452.784 153.19
   LOCATION L0003734     VOLUME   397296.299 3768464.784 153.06
   LOCATION L0003735     VOLUME   397296.299 3768476.784 152.84
   LOCATION L0003736     VOLUME   397296.299 3768488.784 152.52
   LOCATION L0003737     VOLUME   397296.299 3768500.784 152.10
   LOCATION L0003738     VOLUME   397296.299 3768512.784 151.52
   LOCATION L0003739     VOLUME   397296.299 3768524.784 150.84
   LOCATION L0003740     VOLUME   397296.299 3768536.784 150.04
   LOCATION L0003741     VOLUME   397296.299 3768548.784 149.14
   LOCATION L0003742     VOLUME   397296.061 3768560.778 148.12
   LOCATION L0003743     VOLUME   397295.421 3768572.761 146.99
   LOCATION L0003744     VOLUME   397294.782 3768584.744 145.82
   LOCATION L0003745     VOLUME   397294.143 3768596.727 144.51
   LOCATION L0003746     VOLUME   397293.504 3768608.710 143.28
   LOCATION L0003747     VOLUME   397291.884 3768620.455 142.20
   LOCATION L0003748     VOLUME   397286.971 3768631.404 141.04
   LOCATION L0003749     VOLUME   397281.689 3768642.172 139.98
   LOCATION L0003750     VOLUME   397276.086 3768652.783 139.02
   LOCATION L0003751     VOLUME   397270.484 3768663.395 138.09
   LOCATION L0003752     VOLUME   397266.424 3768674.451 137.29
   LOCATION L0003753     VOLUME   397265.526 3768686.418 136.46
   LOCATION L0003754     VOLUME   397264.629 3768698.384 135.67
   LOCATION L0003755     VOLUME   397266.574 3768709.972 134.91
   LOCATION L0003756     VOLUME   397270.568 3768721.288 134.29
   LOCATION L0003757     VOLUME   397274.562 3768732.604 133.63
   LOCATION L0003758     VOLUME   397278.556 3768743.920 133.01
   LOCATION L0003759     VOLUME   397282.550 3768755.236 132.21
   LOCATION L0003760     VOLUME   397286.543 3768766.552 131.34
   LOCATION L0003761     VOLUME   397291.687 3768777.282 130.37
   LOCATION L0003762     VOLUME   397298.493 3768787.165 129.50
   LOCATION L0003763     VOLUME   397305.298 3768797.049 128.59
   LOCATION L0003764     VOLUME   397312.103 3768806.933 127.66
   LOCATION L0003765     VOLUME   397318.908 3768816.817 126.68
   LOCATION L0003766     VOLUME   397325.563 3768826.799 125.51
   LOCATION L0003767     VOLUME   397331.923 3768836.975 124.42
   LOCATION L0003768     VOLUME   397335.305 3768847.861 123.89
** End of LINE VOLUME Source ID = HAUL1
** ----------------------------------------------------------------------
** Line Source Represented by Separated Volume Sources (2W)
** LINE VOLUME Source ID = HAUL2
** DESCRSRC Easter Garves Avenue
** PREFIX
** Length of Side = 9.00
** Configuration = Separated 2W
```

```
** Emission Rate = 1.0
** Vertical Dimension = 7.32
** SZINIT = 3.40
** Nodes = 8
** 397333.303, 3768850.316, 123.89, 3.66, 8.37
** 396759.500, 3768853.596, 132.64, 3.66, 8.37
** 396648.530, 3768854.942, 135.51, 3.66, 8.37
** 396627.976, 3768855.191, 137.22, 3.66, 8.37
** 396617.502, 3768855.318, 138.14, 3.66, 8.37
** 396363.968, 3768853.874, 143.89, 3.66, 8.37
** 396202.741, 3768850.861, 144.00, 3.66, 8.37
** 396092.813, 3768846.895, 133.04, 3.66, 8.37
** ----------------------------------------------------------------------
   LOCATION L0002339     VOLUME   397328.803 3768850.342 123.92
   LOCATION L0002340     VOLUME   397310.803 3768850.445 124.33
   LOCATION L0002341     VOLUME   397292.803 3768850.548 124.75
   LOCATION L0002342     VOLUME   397274.804 3768850.650 125.18
   LOCATION L0002343     VOLUME   397256.804 3768850.753 125.40
   LOCATION L0002344     VOLUME   397238.804 3768850.856 125.08
   LOCATION L0002345     VOLUME   397220.805 3768850.959 124.15
   LOCATION L0002346     VOLUME   397202.805 3768851.062 122.68
   LOCATION L0002347     VOLUME   397184.805 3768851.165 121.18
   LOCATION L0002348     VOLUME   397166.805 3768851.268 120.30
   LOCATION L0002349     VOLUME   397148.806 3768851.371 120.33
   LOCATION L0002350     VOLUME   397130.806 3768851.474 120.80
   LOCATION L0002351     VOLUME   397112.806 3768851.576 121.48
   LOCATION L0002352     VOLUME   397094.807 3768851.679 122.16
   LOCATION L0002353     VOLUME   397076.807 3768851.782 122.93
   LOCATION L0002354     VOLUME   397058.807 3768851.885 124.05
   LOCATION L0002355     VOLUME   397040.808 3768851.988 125.72
   LOCATION L0002356     VOLUME   397022.808 3768852.091 127.47
   LOCATION L0002357     VOLUME   397004.808 3768852.194 129.25
   LOCATION L0002358     VOLUME   396986.808 3768852.297 131.02
   LOCATION L0002359     VOLUME   396968.809 3768852.400 132.78
   LOCATION L0002360     VOLUME   396950.809 3768852.502 134.54
   LOCATION L0002361     VOLUME   396932.809 3768852.605 135.98
   LOCATION L0002362     VOLUME   396914.810 3768852.708 137.14
   LOCATION L0002363     VOLUME   396896.810 3768852.811 138.23
   LOCATION L0002364     VOLUME   396878.810 3768852.914 138.79
   LOCATION L0002365     VOLUME   396860.810 3768853.017 138.59
   LOCATION L0002366     VOLUME   396842.811 3768853.120 137.63
   LOCATION L0002367     VOLUME   396824.811 3768853.223 136.17
   LOCATION L0002368     VOLUME   396806.811 3768853.326 134.69
   LOCATION L0002369     VOLUME   396788.812 3768853.428 133.27
   LOCATION L0002370     VOLUME   396770.812 3768853.531 132.47
   LOCATION L0002371     VOLUME   396752.813 3768853.677 132.71
   LOCATION L0002372     VOLUME   396734.814 3768853.895 133.15
   LOCATION L0002373     VOLUME   396716.815 3768854.114 133.56
   LOCATION L0002374     VOLUME   396698.817 3768854.332 133.98
   LOCATION L0002375     VOLUME   396680.818 3768854.550 134.39
   LOCATION L0002376     VOLUME   396662.819 3768854.768 134.86
   LOCATION L0002377     VOLUME   396644.821 3768854.987 135.71
   LOCATION L0002378     VOLUME   396626.822 3768855.205 137.08
   LOCATION L0002379     VOLUME   396608.823 3768855.269 139.00
   LOCATION L0002380     VOLUME   396590.823 3768855.166 141.45
   LOCATION L0002381     VOLUME   396572.823 3768855.064 144.43
   LOCATION L0002382     VOLUME   396554.824 3768854.961 148.06
   LOCATION L0002383     VOLUME   396536.824 3768854.859 151.60
   LOCATION L0002384     VOLUME   396518.824 3768854.756 153.53
```

```
   LOCATION L0002385     VOLUME   396500.824 3768854.653 155.22
   LOCATION L0002386     VOLUME   396482.825 3768854.551 155.69
   LOCATION L0002387     VOLUME   396464.825 3768854.448 155.76
   LOCATION L0002388     VOLUME   396446.825 3768854.346 154.78
   LOCATION L0002389     VOLUME   396428.826 3768854.243 152.24
   LOCATION L0002390     VOLUME   396410.826 3768854.141 149.44
   LOCATION L0002391     VOLUME   396392.826 3768854.038 146.79
   LOCATION L0002392     VOLUME   396374.827 3768853.936 144.55
   LOCATION L0002393     VOLUME   396356.828 3768853.741 143.81
   LOCATION L0002394     VOLUME   396338.831 3768853.404 143.94
   LOCATION L0002395     VOLUME   396320.834 3768853.068 144.23
   LOCATION L0002396     VOLUME   396302.837 3768852.732 144.41
   LOCATION L0002397     VOLUME   396284.840 3768852.395 144.53
   LOCATION L0002398     VOLUME   396266.844 3768852.059 144.48
   LOCATION L0002399     VOLUME   396248.847 3768851.723 144.39
   LOCATION L0002400     VOLUME   396230.850 3768851.387 144.24
   LOCATION L0002401     VOLUME   396212.853 3768851.050 144.08
   LOCATION L0002402     VOLUME   396194.860 3768850.577 143.91
   LOCATION L0002403     VOLUME   396176.872 3768849.928 142.73
   LOCATION L0002404     VOLUME   396158.883 3768849.279 139.97
   LOCATION L0002405     VOLUME   396140.895 3768848.630 137.08
   LOCATION L0002406     VOLUME   396122.907 3768847.980 134.35
   LOCATION L0002407     VOLUME   396104.918 3768847.331 132.89
** End of LINE VOLUME Source ID = HAUL2
** Source Parameters **
** LINE VOLUME Source ID = RESIV
   SRCPARAM L0001804     0.0256410256      3.66     18.60      3.40
   SRCPARAM L0001805     0.0256410256      3.66     18.60      3.40
   SRCPARAM L0001806     0.0256410256      3.66     18.60      3.40
   SRCPARAM L0001807     0.0256410256      3.66     18.60      3.40
   SRCPARAM L0001808     0.0256410256      3.66     18.60      3.40
   SRCPARAM L0001809     0.0256410256      3.66     18.60      3.40
   SRCPARAM L0001810     0.0256410256      3.66     18.60      3.40
   SRCPARAM L0001811     0.0256410256      3.66     18.60      3.40
   SRCPARAM L0001812     0.0256410256      3.66     18.60      3.40
   SRCPARAM L0001813     0.0256410256      3.66     18.60      3.40
   SRCPARAM L0001814     0.0256410256      3.66     18.60      3.40
   SRCPARAM L0001815     0.0256410256      3.66     18.60      3.40
   SRCPARAM L0001816     0.0256410256      3.66     18.60      3.40
   SRCPARAM L0001817     0.0256410256      3.66     18.60      3.40
   SRCPARAM L0001818     0.0256410256      3.66     18.60      3.40
   SRCPARAM L0001819     0.0256410256      3.66     18.60      3.40
   SRCPARAM L0001820     0.0256410256      3.66     18.60      3.40
   SRCPARAM L0001821     0.0256410256      3.66     18.60      3.40
   SRCPARAM L0001822     0.0256410256      3.66     18.60      3.40
   SRCPARAM L0001823     0.0256410256      3.66     18.60      3.40
   SRCPARAM L0001824     0.0256410256      3.66     18.60      3.40
   SRCPARAM L0001825     0.0256410256      3.66     18.60      3.40
   SRCPARAM L0001826     0.0256410256      3.66     18.60      3.40
   SRCPARAM L0001827     0.0256410256      3.66     18.60      3.40
   SRCPARAM L0001828     0.0256410256      3.66     18.60      3.40
   SRCPARAM L0001829     0.0256410256      3.66     18.60      3.40
   SRCPARAM L0001830     0.0256410256      3.66     18.60      3.40
   SRCPARAM L0001831     0.0256410256      3.66     18.60      3.40
   SRCPARAM L0001832     0.0256410256      3.66     18.60      3.40
   SRCPARAM L0001833     0.0256410256      3.66     18.60      3.40
   SRCPARAM L0001834     0.0256410256      3.66     18.60      3.40
   SRCPARAM L0001835     0.0256410256      3.66     18.60      3.40
   SRCPARAM L0001836     0.0256410256      3.66     18.60      3.40
```

```
   SRCPARAM L0001837     0.0256410256      3.66     18.60      3.40
   SRCPARAM L0001838     0.0256410256      3.66     18.60      3.40
   SRCPARAM L0001839     0.0256410256      3.66     18.60      3.40
   SRCPARAM L0001840     0.0256410256      3.66     18.60      3.40
   SRCPARAM L0001841     0.0256410256      3.66     18.60      3.40
   SRCPARAM L0001842     0.0256410256      3.66     18.60      3.40
** ----------------------------------------------------------------------
** LINE VOLUME Source ID = IO
   SRCPARAM L0001843           0.5      3.66     18.60      3.40
   SRCPARAM L0001844           0.5      3.66     18.60      3.40
** ----------------------------------------------------------------------
   SRCPARAM JS                 1.0     3.660     3.463     3.402
   SRCPARAM FES                1.0     3.660     4.535     3.402
   SRCPARAM EG                 1.0     3.660     3.463     3.402
   SRCPARAM STT                1.0     3.660     1.447     3.402
   SRCPARAM ABWQL              1.0     3.660     5.430     3.402
   SRCPARAM PS                 1.0     3.660     2.907     3.402
** LINE VOLUME Source ID = MISC1
   SRCPARAM L0001845          0.04      3.66      9.30      3.40
   SRCPARAM L0001846          0.04      3.66      9.30      3.40
   SRCPARAM L0001847          0.04      3.66      9.30      3.40
   SRCPARAM L0001848          0.04      3.66      9.30      3.40
   SRCPARAM L0001849          0.04      3.66      9.30      3.40
   SRCPARAM L0001850          0.04      3.66      9.30      3.40
   SRCPARAM L0001851          0.04      3.66      9.30      3.40
   SRCPARAM L0001852          0.04      3.66      9.30      3.40
   SRCPARAM L0001853          0.04      3.66      9.30      3.40
   SRCPARAM L0001854          0.04      3.66      9.30      3.40
   SRCPARAM L0001855          0.04      3.66      9.30      3.40
   SRCPARAM L0001856          0.04      3.66      9.30      3.40
   SRCPARAM L0001857          0.04      3.66      9.30      3.40
   SRCPARAM L0001858          0.04      3.66      9.30      3.40
   SRCPARAM L0001859          0.04      3.66      9.30      3.40
   SRCPARAM L0001860          0.04      3.66      9.30      3.40
   SRCPARAM L0001861          0.04      3.66      9.30      3.40
   SRCPARAM L0001862          0.04      3.66      9.30      3.40
   SRCPARAM L0001863          0.04      3.66      9.30      3.40
   SRCPARAM L0001864          0.04      3.66      9.30      3.40
   SRCPARAM L0001865          0.04      3.66      9.30      3.40
   SRCPARAM L0001866          0.04      3.66      9.30      3.40
   SRCPARAM L0001867          0.04      3.66      9.30      3.40
   SRCPARAM L0001868          0.04      3.66      9.30      3.40
   SRCPARAM L0001869          0.04      3.66      9.30      3.40
** ----------------------------------------------------------------------
** LINE VOLUME Source ID = MISC2
   SRCPARAM L0001870     0.0113636364      3.66      9.30      3.40
   SRCPARAM L0001871     0.0113636364      3.66      9.30      3.40
   SRCPARAM L0001872     0.0113636364      3.66      9.30      3.40
   SRCPARAM L0001873     0.0113636364      3.66      9.30      3.40
   SRCPARAM L0001874     0.0113636364      3.66      9.30      3.40
   SRCPARAM L0001875     0.0113636364      3.66      9.30      3.40
   SRCPARAM L0001876     0.0113636364      3.66      9.30      3.40
   SRCPARAM L0001877     0.0113636364      3.66      9.30      3.40
   SRCPARAM L0001878     0.0113636364      3.66      9.30      3.40
   SRCPARAM L0001879     0.0113636364      3.66      9.30      3.40
   SRCPARAM L0001880     0.0113636364      3.66      9.30      3.40
   SRCPARAM L0001881     0.0113636364      3.66      9.30      3.40
   SRCPARAM L0001882     0.0113636364      3.66      9.30      3.40
   SRCPARAM L0001883     0.0113636364      3.66      9.30      3.40
```

SRCPARAM L0001884	0.0113636364	3.66	9.30	3.40
SRCPARAM L0001885	0.0113636364	3.66	9.30	3.40
SRCPARAM L0001886	0.0113636364	3.66	9.30	3.40
SRCPARAM L0001887	0.0113636364	3.66	9.30	3.40
SRCPARAM L0001888	0.0113636364	3.66	9.30	3.40
SRCPARAM L0001889	0.0113636364	3.66	9.30	3.40
SRCPARAM L0001890	0.0113636364	3.66	9.30	3.40
SRCPARAM L0001891	0.0113636364	3.66	9.30	3.40
SRCPARAM L0001892	0.0113636364	3.66	9.30	3.40
SRCPARAM L0001893	0.0113636364	3.66	9.30	3.40
SRCPARAM L0001894	0.0113636364	3.66	9.30	3.40
SRCPARAM L0001895	0.0113636364	3.66	9.30	3.40
SRCPARAM L0001896	0.0113636364	3.66	9.30	3.40
SRCPARAM L0001897	0.0113636364	3.66	9.30	3.40
SRCPARAM L0001898	0.0113636364	3.66	9.30	3.40
SRCPARAM L0001899	0.0113636364	3.66	9.30	3.40
SRCPARAM L0001900	0.0113636364	3.66	9.30	3.40
SRCPARAM L0001901	0.0113636364	3.66	9.30	3.40
SRCPARAM L0001902	0.0113636364	3.66	9.30	3.40
SRCPARAM L0001903	0.0113636364	3.66	9.30	3.40
SRCPARAM L0001904	0.0113636364	3.66	9.30	3.40
SRCPARAM L0001905	0.0113636364	3.66	9.30	3.40
SRCPARAM L0001906	0.0113636364	3.66	9.30	3.40
SRCPARAM L0001907	0.0113636364	3.66	9.30	3.40
SRCPARAM L0001908	0.0113636364	3.66	9.30	3.40
SRCPARAM L0001909	0.0113636364	3.66	9.30	3.40
SRCPARAM L0001910	0.0113636364	3.66	9.30	3.40
SRCPARAM L0001911	0.0113636364	3.66	9.30	3.40
SRCPARAM L0001912	0.0113636364	3.66	9.30	3.40
SRCPARAM L0001913	0.0113636364	3.66	9.30	3.40
SRCPARAM L0001914	0.0113636364	3.66	9.30	3.40
SRCPARAM L0001915	0.0113636364	3.66	9.30	3.40
SRCPARAM L0001916	0.0113636364	3.66	9.30	3.40
SRCPARAM L0001917	0.0113636364	3.66	9.30	3.40
SRCPARAM L0001918	0.0113636364	3.66	9.30	3.40
SRCPARAM L0001919	0.0113636364	3.66	9.30	3.40
SRCPARAM L0001920	0.0113636364	3.66	9.30	3.40
SRCPARAM L0001921	0.0113636364	3.66	9.30	3.40
SRCPARAM L0001922	0.0113636364	3.66	9.30	3.40
SRCPARAM L0001923	0.0113636364	3.66	9.30	3.40
SRCPARAM L0001924	0.0113636364	3.66	9.30	3.40
SRCPARAM L0001925	0.0113636364	3.66	9.30	3.40
SRCPARAM L0001926	0.0113636364	3.66	9.30	3.40
SRCPARAM L0001927	0.0113636364	3.66	9.30	3.40
SRCPARAM L0001928	0.0113636364	3.66	9.30	3.40
SRCPARAM L0001929	0.0113636364	3.66	9.30	3.40
SRCPARAM L0001930	0.0113636364	3.66	9.30	3.40
SRCPARAM L0001931	0.0113636364	3.66	9.30	3.40
SRCPARAM L0001932	0.0113636364	3.66	9.30	3.40
SRCPARAM L0001933	0.0113636364	3.66	9.30	3.40
SRCPARAM L0001934	0.0113636364	3.66	9.30	3.40
SRCPARAM L0001935	0.0113636364	3.66	9.30	3.40
SRCPARAM L0001936	0.0113636364	3.66	9.30	3.40
SRCPARAM L0001937	0.0113636364	3.66	9.30	3.40
SRCPARAM L0001938	0.0113636364	3.66	9.30	3.40
SRCPARAM L0001939	0.0113636364	3.66	9.30	3.40
SRCPARAM L0001940	0.0113636364	3.66	9.30	3.40
SRCPARAM L0001941	0.0113636364	3.66	9.30	3.40
SRCPARAM L0001942	0.0113636364	3.66	9.30	3.40

```
   SRCPARAM L0001943     0.0113636364      3.66      9.30      3.40
   SRCPARAM L0001944     0.0113636364      3.66      9.30      3.40
   SRCPARAM L0001945     0.0113636364      3.66      9.30      3.40
   SRCPARAM L0001946     0.0113636364      3.66      9.30      3.40
   SRCPARAM L0001947     0.0113636364      3.66      9.30      3.40
   SRCPARAM L0001948     0.0113636364      3.66      9.30      3.40
   SRCPARAM L0001949     0.0113636364      3.66      9.30      3.40
   SRCPARAM L0001950     0.0113636364      3.66      9.30      3.40
   SRCPARAM L0001951     0.0113636364      3.66      9.30      3.40
   SRCPARAM L0001952     0.0113636364      3.66      9.30      3.40
   SRCPARAM L0001953     0.0113636364      3.66      9.30      3.40
   SRCPARAM L0001954     0.0113636364      3.66      9.30      3.40
   SRCPARAM L0001955     0.0113636364      3.66      9.30      3.40
   SRCPARAM L0001956     0.0113636364      3.66      9.30      3.40
   SRCPARAM L0001957     0.0113636364      3.66      9.30      3.40
** ----------------------------------------------------------------------
** LINE VOLUME Source ID = MISC3
   SRCPARAM L0001958     0.0169491525      3.66      9.30      3.40
   SRCPARAM L0001959     0.0169491525      3.66      9.30      3.40
   SRCPARAM L0001960     0.0169491525      3.66      9.30      3.40
   SRCPARAM L0001961     0.0169491525      3.66      9.30      3.40
   SRCPARAM L0001962     0.0169491525      3.66      9.30      3.40
   SRCPARAM L0001963     0.0169491525      3.66      9.30      3.40
   SRCPARAM L0001964     0.0169491525      3.66      9.30      3.40
   SRCPARAM L0001965     0.0169491525      3.66      9.30      3.40
   SRCPARAM L0001966     0.0169491525      3.66      9.30      3.40
   SRCPARAM L0001967     0.0169491525      3.66      9.30      3.40
   SRCPARAM L0001968     0.0169491525      3.66      9.30      3.40
   SRCPARAM L0001969     0.0169491525      3.66      9.30      3.40
   SRCPARAM L0001970     0.0169491525      3.66      9.30      3.40
   SRCPARAM L0001971     0.0169491525      3.66      9.30      3.40
   SRCPARAM L0001972     0.0169491525      3.66      9.30      3.40
   SRCPARAM L0001973     0.0169491525      3.66      9.30      3.40
   SRCPARAM L0001974     0.0169491525      3.66      9.30      3.40
   SRCPARAM L0001975     0.0169491525      3.66      9.30      3.40
   SRCPARAM L0001976     0.0169491525      3.66      9.30      3.40
   SRCPARAM L0001977     0.0169491525      3.66      9.30      3.40
   SRCPARAM L0001978     0.0169491525      3.66      9.30      3.40
   SRCPARAM L0001979     0.0169491525      3.66      9.30      3.40
   SRCPARAM L0001980     0.0169491525      3.66      9.30      3.40
   SRCPARAM L0001981     0.0169491525      3.66      9.30      3.40
   SRCPARAM L0001982     0.0169491525      3.66      9.30      3.40
   SRCPARAM L0001983     0.0169491525      3.66      9.30      3.40
   SRCPARAM L0001984     0.0169491525      3.66      9.30      3.40
   SRCPARAM L0001985     0.0169491525      3.66      9.30      3.40
   SRCPARAM L0001986     0.0169491525      3.66      9.30      3.40
   SRCPARAM L0001987     0.0169491525      3.66      9.30      3.40
   SRCPARAM L0001988     0.0169491525      3.66      9.30      3.40
   SRCPARAM L0001989     0.0169491525      3.66      9.30      3.40
   SRCPARAM L0001990     0.0169491525      3.66      9.30      3.40
   SRCPARAM L0001991     0.0169491525      3.66      9.30      3.40
   SRCPARAM L0001992     0.0169491525      3.66      9.30      3.40
   SRCPARAM L0001993     0.0169491525      3.66      9.30      3.40
   SRCPARAM L0001994     0.0169491525      3.66      9.30      3.40
   SRCPARAM L0001995     0.0169491525      3.66      9.30      3.40
   SRCPARAM L0001996     0.0169491525      3.66      9.30      3.40
   SRCPARAM L0001997     0.0169491525      3.66      9.30      3.40
   SRCPARAM L0001998     0.0169491525      3.66      9.30      3.40
   SRCPARAM L0001999     0.0169491525      3.66      9.30      3.40
```

```
   SRCPARAM L0002000     0.0169491525      3.66      9.30      3.40
   SRCPARAM L0002001     0.0169491525      3.66      9.30      3.40
   SRCPARAM L0002002     0.0169491525      3.66      9.30      3.40
   SRCPARAM L0002003     0.0169491525      3.66      9.30      3.40
   SRCPARAM L0002004     0.0169491525      3.66      9.30      3.40
   SRCPARAM L0002005     0.0169491525      3.66      9.30      3.40
   SRCPARAM L0002006     0.0169491525      3.66      9.30      3.40
   SRCPARAM L0002007     0.0169491525      3.66      9.30      3.40
   SRCPARAM L0002008     0.0169491525      3.66      9.30      3.40
   SRCPARAM L0002009     0.0169491525      3.66      9.30      3.40
   SRCPARAM L0002010     0.0169491525      3.66      9.30      3.40
   SRCPARAM L0002011     0.0169491525      3.66      9.30      3.40
   SRCPARAM L0002012     0.0169491525      3.66      9.30      3.40
   SRCPARAM L0002013     0.0169491525      3.66      9.30      3.40
   SRCPARAM L0002014     0.0169491525      3.66      9.30      3.40
   SRCPARAM L0002015     0.0169491525      3.66      9.30      3.40
   SRCPARAM L0002016     0.0169491525      3.66      9.30      3.40
** ----------------------------------------------------------------------
** LINE VOLUME Source ID = MISC4
   SRCPARAM L0002017          0.04      3.66      9.30      3.40
   SRCPARAM L0002018          0.04      3.66      9.30      3.40
   SRCPARAM L0002019          0.04      3.66      9.30      3.40
   SRCPARAM L0002020          0.04      3.66      9.30      3.40
   SRCPARAM L0002021          0.04      3.66      9.30      3.40
   SRCPARAM L0002022          0.04      3.66      9.30      3.40
   SRCPARAM L0002023          0.04      3.66      9.30      3.40
   SRCPARAM L0002024          0.04      3.66      9.30      3.40
   SRCPARAM L0002025          0.04      3.66      9.30      3.40
   SRCPARAM L0002026          0.04      3.66      9.30      3.40
   SRCPARAM L0002027          0.04      3.66      9.30      3.40
   SRCPARAM L0002028          0.04      3.66      9.30      3.40
   SRCPARAM L0002029          0.04      3.66      9.30      3.40
   SRCPARAM L0002030          0.04      3.66      9.30      3.40
   SRCPARAM L0002031          0.04      3.66      9.30      3.40
   SRCPARAM L0002032          0.04      3.66      9.30      3.40
   SRCPARAM L0002033          0.04      3.66      9.30      3.40
   SRCPARAM L0002034          0.04      3.66      9.30      3.40
   SRCPARAM L0002035          0.04      3.66      9.30      3.40
   SRCPARAM L0002036          0.04      3.66      9.30      3.40
   SRCPARAM L0002037          0.04      3.66      9.30      3.40
   SRCPARAM L0002038          0.04      3.66      9.30      3.40
   SRCPARAM L0002039          0.04      3.66      9.30      3.40
   SRCPARAM L0002040          0.04      3.66      9.30      3.40
   SRCPARAM L0002041          0.04      3.66      9.30      3.40
** ----------------------------------------------------------------------
** LINE VOLUME Source ID = MISC5
   SRCPARAM L0002042     0.0714285714      3.66      9.30      3.40
   SRCPARAM L0002043     0.0714285714      3.66      9.30      3.40
   SRCPARAM L0002044     0.0714285714      3.66      9.30      3.40
   SRCPARAM L0002045     0.0714285714      3.66      9.30      3.40
   SRCPARAM L0002046     0.0714285714      3.66      9.30      3.40
   SRCPARAM L0002047     0.0714285714      3.66      9.30      3.40
   SRCPARAM L0002048     0.0714285714      3.66      9.30      3.40
   SRCPARAM L0002049     0.0714285714      3.66      9.30      3.40
   SRCPARAM L0002050     0.0714285714      3.66      9.30      3.40
   SRCPARAM L0002051     0.0714285714      3.66      9.30      3.40
   SRCPARAM L0002052     0.0714285714      3.66      9.30      3.40
   SRCPARAM L0002053     0.0714285714      3.66      9.30      3.40
   SRCPARAM L0002054     0.0714285714      3.66      9.30      3.40
```

```
   SRCPARAM L0002055     0.0714285714      3.66      9.30      3.40
** ----------------------------------------------------------------------
** LINE VOLUME Source ID = MISC7
   SRCPARAM L0002056     0.0769230769      3.66      9.30      3.40
   SRCPARAM L0002057     0.0769230769      3.66      9.30      3.40
   SRCPARAM L0002058     0.0769230769      3.66      9.30      3.40
   SRCPARAM L0002059     0.0769230769      3.66      9.30      3.40
   SRCPARAM L0002060     0.0769230769      3.66      9.30      3.40
   SRCPARAM L0002061     0.0769230769      3.66      9.30      3.40
   SRCPARAM L0002062     0.0769230769      3.66      9.30      3.40
   SRCPARAM L0002063     0.0769230769      3.66      9.30      3.40
   SRCPARAM L0002064     0.0769230769      3.66      9.30      3.40
   SRCPARAM L0002065     0.0769230769      3.66      9.30      3.40
   SRCPARAM L0002066     0.0769230769      3.66      9.30      3.40
   SRCPARAM L0002067     0.0769230769      3.66      9.30      3.40
   SRCPARAM L0002068     0.0769230769      3.66      9.30      3.40
** ----------------------------------------------------------------------
** LINE VOLUME Source ID = MISC6
   SRCPARAM L0002069     0.0555555556      3.66      9.30      3.40
   SRCPARAM L0002070     0.0555555556      3.66      9.30      3.40
   SRCPARAM L0002071     0.0555555556      3.66      9.30      3.40
   SRCPARAM L0002072     0.0555555556      3.66      9.30      3.40
   SRCPARAM L0002073     0.0555555556      3.66      9.30      3.40
   SRCPARAM L0002074     0.0555555556      3.66      9.30      3.40
   SRCPARAM L0002075     0.0555555556      3.66      9.30      3.40
   SRCPARAM L0002076     0.0555555556      3.66      9.30      3.40
   SRCPARAM L0002077     0.0555555556      3.66      9.30      3.40
   SRCPARAM L0002078     0.0555555556      3.66      9.30      3.40
   SRCPARAM L0002079     0.0555555556      3.66      9.30      3.40
   SRCPARAM L0002080     0.0555555556      3.66      9.30      3.40
   SRCPARAM L0002081     0.0555555556      3.66      9.30      3.40
   SRCPARAM L0002082     0.0555555556      3.66      9.30      3.40
   SRCPARAM L0002083     0.0555555556      3.66      9.30      3.40
   SRCPARAM L0002084     0.0555555556      3.66      9.30      3.40
   SRCPARAM L0002085     0.0555555556      3.66      9.30      3.40
   SRCPARAM L0002086     0.0555555556      3.66      9.30      3.40
** ----------------------------------------------------------------------
** LINE VOLUME Source ID = HAUL1
   SRCPARAM L0003711     0.0172413793      3.66      5.58      3.40
   SRCPARAM L0003712     0.0172413793      3.66      5.58      3.40
   SRCPARAM L0003713     0.0172413793      3.66      5.58      3.40
   SRCPARAM L0003714     0.0172413793      3.66      5.58      3.40
   SRCPARAM L0003715     0.0172413793      3.66      5.58      3.40
   SRCPARAM L0003716     0.0172413793      3.66      5.58      3.40
   SRCPARAM L0003717     0.0172413793      3.66      5.58      3.40
   SRCPARAM L0003718     0.0172413793      3.66      5.58      3.40
   SRCPARAM L0003719     0.0172413793      3.66      5.58      3.40
   SRCPARAM L0003720     0.0172413793      3.66      5.58      3.40
   SRCPARAM L0003721     0.0172413793      3.66      5.58      3.40
   SRCPARAM L0003722     0.0172413793      3.66      5.58      3.40
   SRCPARAM L0003723     0.0172413793      3.66      5.58      3.40
   SRCPARAM L0003724     0.0172413793      3.66      5.58      3.40
   SRCPARAM L0003725     0.0172413793      3.66      5.58      3.40
   SRCPARAM L0003726     0.0172413793      3.66      5.58      3.40
   SRCPARAM L0003727     0.0172413793      3.66      5.58      3.40
   SRCPARAM L0003728     0.0172413793      3.66      5.58      3.40
   SRCPARAM L0003729     0.0172413793      3.66      5.58      3.40
   SRCPARAM L0003730     0.0172413793      3.66      5.58      3.40
   SRCPARAM L0003731     0.0172413793      3.66      5.58      3.40
```

```
   SRCPARAM L0003732     0.0172413793      3.66      5.58      3.40
   SRCPARAM L0003733     0.0172413793      3.66      5.58      3.40
   SRCPARAM L0003734     0.0172413793      3.66      5.58      3.40
   SRCPARAM L0003735     0.0172413793      3.66      5.58      3.40
   SRCPARAM L0003736     0.0172413793      3.66      5.58      3.40
   SRCPARAM L0003737     0.0172413793      3.66      5.58      3.40
   SRCPARAM L0003738     0.0172413793      3.66      5.58      3.40
   SRCPARAM L0003739     0.0172413793      3.66      5.58      3.40
   SRCPARAM L0003740     0.0172413793      3.66      5.58      3.40
   SRCPARAM L0003741     0.0172413793      3.66      5.58      3.40
   SRCPARAM L0003742     0.0172413793      3.66      5.58      3.40
   SRCPARAM L0003743     0.0172413793      3.66      5.58      3.40
   SRCPARAM L0003744     0.0172413793      3.66      5.58      3.40
   SRCPARAM L0003745     0.0172413793      3.66      5.58      3.40
   SRCPARAM L0003746     0.0172413793      3.66      5.58      3.40
   SRCPARAM L0003747     0.0172413793      3.66      5.58      3.40
   SRCPARAM L0003748     0.0172413793      3.66      5.58      3.40
   SRCPARAM L0003749     0.0172413793      3.66      5.58      3.40
   SRCPARAM L0003750     0.0172413793      3.66      5.58      3.40
   SRCPARAM L0003751     0.0172413793      3.66      5.58      3.40
   SRCPARAM L0003752     0.0172413793      3.66      5.58      3.40
   SRCPARAM L0003753     0.0172413793      3.66      5.58      3.40
   SRCPARAM L0003754     0.0172413793      3.66      5.58      3.40
   SRCPARAM L0003755     0.0172413793      3.66      5.58      3.40
   SRCPARAM L0003756     0.0172413793      3.66      5.58      3.40
   SRCPARAM L0003757     0.0172413793      3.66      5.58      3.40
   SRCPARAM L0003758     0.0172413793      3.66      5.58      3.40
   SRCPARAM L0003759     0.0172413793      3.66      5.58      3.40
   SRCPARAM L0003760     0.0172413793      3.66      5.58      3.40
   SRCPARAM L0003761     0.0172413793      3.66      5.58      3.40
   SRCPARAM L0003762     0.0172413793      3.66      5.58      3.40
   SRCPARAM L0003763     0.0172413793      3.66      5.58      3.40
   SRCPARAM L0003764     0.0172413793      3.66      5.58      3.40
   SRCPARAM L0003765     0.0172413793      3.66      5.58      3.40
   SRCPARAM L0003766     0.0172413793      3.66      5.58      3.40
   SRCPARAM L0003767     0.0172413793      3.66      5.58      3.40
   SRCPARAM L0003768     0.0172413793      3.66      5.58      3.40
** ----------------------------------------------------------------------
** LINE VOLUME Source ID = HAUL2
   SRCPARAM L0002339     0.0144927536      3.66      8.37      3.40
   SRCPARAM L0002340     0.0144927536      3.66      8.37      3.40
   SRCPARAM L0002341     0.0144927536      3.66      8.37      3.40
   SRCPARAM L0002342     0.0144927536      3.66      8.37      3.40
   SRCPARAM L0002343     0.0144927536      3.66      8.37      3.40
   SRCPARAM L0002344     0.0144927536      3.66      8.37      3.40
   SRCPARAM L0002345     0.0144927536      3.66      8.37      3.40
   SRCPARAM L0002346     0.0144927536      3.66      8.37      3.40
   SRCPARAM L0002347     0.0144927536      3.66      8.37      3.40
   SRCPARAM L0002348     0.0144927536      3.66      8.37      3.40
   SRCPARAM L0002349     0.0144927536      3.66      8.37      3.40
   SRCPARAM L0002350     0.0144927536      3.66      8.37      3.40
   SRCPARAM L0002351     0.0144927536      3.66      8.37      3.40
   SRCPARAM L0002352     0.0144927536      3.66      8.37      3.40
   SRCPARAM L0002353     0.0144927536      3.66      8.37      3.40
   SRCPARAM L0002354     0.0144927536      3.66      8.37      3.40
   SRCPARAM L0002355     0.0144927536      3.66      8.37      3.40
   SRCPARAM L0002356     0.0144927536      3.66      8.37      3.40
   SRCPARAM L0002357     0.0144927536      3.66      8.37      3.40
   SRCPARAM L0002358     0.0144927536      3.66      8.37      3.40
```

```
   SRCPARAM L0002359     0.0144927536      3.66      8.37      3.40
   SRCPARAM L0002360     0.0144927536      3.66      8.37      3.40
   SRCPARAM L0002361     0.0144927536      3.66      8.37      3.40
   SRCPARAM L0002362     0.0144927536      3.66      8.37      3.40
   SRCPARAM L0002363     0.0144927536      3.66      8.37      3.40
   SRCPARAM L0002364     0.0144927536      3.66      8.37      3.40
   SRCPARAM L0002365     0.0144927536      3.66      8.37      3.40
   SRCPARAM L0002366     0.0144927536      3.66      8.37      3.40
   SRCPARAM L0002367     0.0144927536      3.66      8.37      3.40
   SRCPARAM L0002368     0.0144927536      3.66      8.37      3.40
   SRCPARAM L0002369     0.0144927536      3.66      8.37      3.40
   SRCPARAM L0002370     0.0144927536      3.66      8.37      3.40
   SRCPARAM L0002371     0.0144927536      3.66      8.37      3.40
   SRCPARAM L0002372     0.0144927536      3.66      8.37      3.40
   SRCPARAM L0002373     0.0144927536      3.66      8.37      3.40
   SRCPARAM L0002374     0.0144927536      3.66      8.37      3.40
   SRCPARAM L0002375     0.0144927536      3.66      8.37      3.40
   SRCPARAM L0002376     0.0144927536      3.66      8.37      3.40
   SRCPARAM L0002377     0.0144927536      3.66      8.37      3.40
   SRCPARAM L0002378     0.0144927536      3.66      8.37      3.40
   SRCPARAM L0002379     0.0144927536      3.66      8.37      3.40
   SRCPARAM L0002380     0.0144927536      3.66      8.37      3.40
   SRCPARAM L0002381     0.0144927536      3.66      8.37      3.40
   SRCPARAM L0002382     0.0144927536      3.66      8.37      3.40
   SRCPARAM L0002383     0.0144927536      3.66      8.37      3.40
   SRCPARAM L0002384     0.0144927536      3.66      8.37      3.40
   SRCPARAM L0002385     0.0144927536      3.66      8.37      3.40
   SRCPARAM L0002386     0.0144927536      3.66      8.37      3.40
   SRCPARAM L0002387     0.0144927536      3.66      8.37      3.40
   SRCPARAM L0002388     0.0144927536      3.66      8.37      3.40
   SRCPARAM L0002389     0.0144927536      3.66      8.37      3.40
   SRCPARAM L0002390     0.0144927536      3.66      8.37      3.40
   SRCPARAM L0002391     0.0144927536      3.66      8.37      3.40
   SRCPARAM L0002392     0.0144927536      3.66      8.37      3.40
   SRCPARAM L0002393     0.0144927536      3.66      8.37      3.40
   SRCPARAM L0002394     0.0144927536      3.66      8.37      3.40
   SRCPARAM L0002395     0.0144927536      3.66      8.37      3.40
   SRCPARAM L0002396     0.0144927536      3.66      8.37      3.40
   SRCPARAM L0002397     0.0144927536      3.66      8.37      3.40
   SRCPARAM L0002398     0.0144927536      3.66      8.37      3.40
   SRCPARAM L0002399     0.0144927536      3.66      8.37      3.40
   SRCPARAM L0002400     0.0144927536      3.66      8.37      3.40
   SRCPARAM L0002401     0.0144927536      3.66      8.37      3.40
   SRCPARAM L0002402     0.0144927536      3.66      8.37      3.40
   SRCPARAM L0002403     0.0144927536      3.66      8.37      3.40
   SRCPARAM L0002404     0.0144927536      3.66      8.37      3.40
   SRCPARAM L0002405     0.0144927536      3.66      8.37      3.40
   SRCPARAM L0002406     0.0144927536      3.66      8.37      3.40
   SRCPARAM L0002407     0.0144927536      3.66      8.37      3.40
** ----------------------------------------------------------------------
   URBANSRC ALL

** Variable Emissions Type: "By Hour / Day (HRDOW)"
** Variable Emission Scenario: "Const"
** WeekDays:
   EMISFACT L0001804     HRDOW 0.0 0.0 0.0 0.0 0.0 0.0
   EMISFACT L0001804     HRDOW 1.0 1.0 1.0 1.0 1.0 1.0
   EMISFACT L0001804     HRDOW 1.0 1.0 1.0 1.0 0.0 0.0
   EMISFACT L0001804     HRDOW 0.0 0.0 0.0 0.0 0.0 0.0
```

```
EMISFACT L0001805     HRDOW 0.0 0.0 0.0 0.0 0.0 0.0
EMISFACT L0001805     HRDOW 1.0 1.0 1.0 1.0 1.0 1.0
EMISFACT L0001805     HRDOW 1.0 1.0 1.0 1.0 0.0 0.0
EMISFACT L0001805     HRDOW 0.0 0.0 0.0 0.0 0.0 0.0
EMISFACT L0001806     HRDOW 0.0 0.0 0.0 0.0 0.0 0.0
EMISFACT L0001806     HRDOW 1.0 1.0 1.0 1.0 1.0 1.0
EMISFACT L0001806     HRDOW 1.0 1.0 1.0 1.0 0.0 0.0
EMISFACT L0001806     HRDOW 0.0 0.0 0.0 0.0 0.0 0.0
EMISFACT L0001807     HRDOW 0.0 0.0 0.0 0.0 0.0 0.0
EMISFACT L0001807     HRDOW 1.0 1.0 1.0 1.0 1.0 1.0
EMISFACT L0001807     HRDOW 1.0 1.0 1.0 1.0 0.0 0.0
EMISFACT L0001807     HRDOW 0.0 0.0 0.0 0.0 0.0 0.0
EMISFACT L0001808     HRDOW 0.0 0.0 0.0 0.0 0.0 0.0
EMISFACT L0001808     HRDOW 1.0 1.0 1.0 1.0 1.0 1.0
EMISFACT L0001808     HRDOW 1.0 1.0 1.0 1.0 0.0 0.0
EMISFACT L0001808     HRDOW 0.0 0.0 0.0 0.0 0.0 0.0
EMISFACT L0001809     HRDOW 0.0 0.0 0.0 0.0 0.0 0.0
EMISFACT L0001809     HRDOW 1.0 1.0 1.0 1.0 1.0 1.0
EMISFACT L0001809     HRDOW 1.0 1.0 1.0 1.0 0.0 0.0
EMISFACT L0001809     HRDOW 0.0 0.0 0.0 0.0 0.0 0.0
EMISFACT L0001810     HRDOW 0.0 0.0 0.0 0.0 0.0 0.0
EMISFACT L0001810     HRDOW 1.0 1.0 1.0 1.0 1.0 1.0
EMISFACT L0001810     HRDOW 1.0 1.0 1.0 1.0 0.0 0.0
EMISFACT L0001810     HRDOW 0.0 0.0 0.0 0.0 0.0 0.0
EMISFACT L0001811     HRDOW 0.0 0.0 0.0 0.0 0.0 0.0
EMISFACT L0001811     HRDOW 1.0 1.0 1.0 1.0 1.0 1.0
EMISFACT L0001811     HRDOW 1.0 1.0 1.0 1.0 0.0 0.0
EMISFACT L0001811     HRDOW 0.0 0.0 0.0 0.0 0.0 0.0
EMISFACT L0001812     HRDOW 0.0 0.0 0.0 0.0 0.0 0.0
EMISFACT L0001812     HRDOW 1.0 1.0 1.0 1.0 1.0 1.0
EMISFACT L0001812     HRDOW 1.0 1.0 1.0 1.0 0.0 0.0
EMISFACT L0001812     HRDOW 0.0 0.0 0.0 0.0 0.0 0.0
EMISFACT L0001813     HRDOW 0.0 0.0 0.0 0.0 0.0 0.0
EMISFACT L0001813     HRDOW 1.0 1.0 1.0 1.0 1.0 1.0
EMISFACT L0001813     HRDOW 1.0 1.0 1.0 1.0 0.0 0.0
EMISFACT L0001813     HRDOW 0.0 0.0 0.0 0.0 0.0 0.0
EMISFACT L0001814     HRDOW 0.0 0.0 0.0 0.0 0.0 0.0
EMISFACT L0001814     HRDOW 1.0 1.0 1.0 1.0 1.0 1.0
EMISFACT L0001814     HRDOW 1.0 1.0 1.0 1.0 0.0 0.0
EMISFACT L0001814     HRDOW 0.0 0.0 0.0 0.0 0.0 0.0
EMISFACT L0001815     HRDOW 0.0 0.0 0.0 0.0 0.0 0.0
EMISFACT L0001815     HRDOW 1.0 1.0 1.0 1.0 1.0 1.0
EMISFACT L0001815     HRDOW 1.0 1.0 1.0 1.0 0.0 0.0
EMISFACT L0001815     HRDOW 0.0 0.0 0.0 0.0 0.0 0.0
EMISFACT L0001816     HRDOW 0.0 0.0 0.0 0.0 0.0 0.0
EMISFACT L0001816     HRDOW 1.0 1.0 1.0 1.0 1.0 1.0
EMISFACT L0001816     HRDOW 1.0 1.0 1.0 1.0 0.0 0.0
EMISFACT L0001816     HRDOW 0.0 0.0 0.0 0.0 0.0 0.0
EMISFACT L0001817     HRDOW 0.0 0.0 0.0 0.0 0.0 0.0
EMISFACT L0001817     HRDOW 1.0 1.0 1.0 1.0 1.0 1.0
EMISFACT L0001817     HRDOW 1.0 1.0 1.0 1.0 0.0 0.0
EMISFACT L0001817     HRDOW 0.0 0.0 0.0 0.0 0.0 0.0
EMISFACT L0001818     HRDOW 0.0 0.0 0.0 0.0 0.0 0.0
EMISFACT L0001818     HRDOW 1.0 1.0 1.0 1.0 1.0 1.0
EMISFACT L0001818     HRDOW 1.0 1.0 1.0 1.0 0.0 0.0
EMISFACT L0001818     HRDOW 0.0 0.0 0.0 0.0 0.0 0.0
EMISFACT L0001819     HRDOW 0.0 0.0 0.0 0.0 0.0 0.0
EMISFACT L0001819     HRDOW 1.0 1.0 1.0 1.0 1.0 1.0
EMISFACT L0001819     HRDOW 1.0 1.0 1.0 1.0 0.0 0.0
```

```
EMISFACT L0001819     HRDOW 0.0 0.0 0.0 0.0 0.0 0.0
EMISFACT L0001820     HRDOW 0.0 0.0 0.0 0.0 0.0 0.0
EMISFACT L0001820     HRDOW 1.0 1.0 1.0 1.0 1.0 1.0
EMISFACT L0001820     HRDOW 1.0 1.0 1.0 1.0 0.0 0.0
EMISFACT L0001820     HRDOW 0.0 0.0 0.0 0.0 0.0 0.0
EMISFACT L0001821     HRDOW 0.0 0.0 0.0 0.0 0.0 0.0
EMISFACT L0001821     HRDOW 1.0 1.0 1.0 1.0 1.0 1.0
EMISFACT L0001821     HRDOW 1.0 1.0 1.0 1.0 0.0 0.0
EMISFACT L0001821     HRDOW 0.0 0.0 0.0 0.0 0.0 0.0
EMISFACT L0001822     HRDOW 0.0 0.0 0.0 0.0 0.0 0.0
EMISFACT L0001822     HRDOW 1.0 1.0 1.0 1.0 1.0 1.0
EMISFACT L0001822     HRDOW 1.0 1.0 1.0 1.0 0.0 0.0
EMISFACT L0001822     HRDOW 0.0 0.0 0.0 0.0 0.0 0.0
EMISFACT L0001823     HRDOW 0.0 0.0 0.0 0.0 0.0 0.0
EMISFACT L0001823     HRDOW 1.0 1.0 1.0 1.0 1.0 1.0
EMISFACT L0001823     HRDOW 1.0 1.0 1.0 1.0 0.0 0.0
EMISFACT L0001823     HRDOW 0.0 0.0 0.0 0.0 0.0 0.0
EMISFACT L0001824     HRDOW 0.0 0.0 0.0 0.0 0.0 0.0
EMISFACT L0001824     HRDOW 1.0 1.0 1.0 1.0 1.0 1.0
EMISFACT L0001824     HRDOW 1.0 1.0 1.0 1.0 0.0 0.0
EMISFACT L0001824     HRDOW 0.0 0.0 0.0 0.0 0.0 0.0
EMISFACT L0001825     HRDOW 0.0 0.0 0.0 0.0 0.0 0.0
EMISFACT L0001825     HRDOW 1.0 1.0 1.0 1.0 1.0 1.0
EMISFACT L0001825     HRDOW 1.0 1.0 1.0 1.0 0.0 0.0
EMISFACT L0001825     HRDOW 0.0 0.0 0.0 0.0 0.0 0.0
EMISFACT L0001826     HRDOW 0.0 0.0 0.0 0.0 0.0 0.0
EMISFACT L0001826     HRDOW 1.0 1.0 1.0 1.0 1.0 1.0
EMISFACT L0001826     HRDOW 1.0 1.0 1.0 1.0 0.0 0.0
EMISFACT L0001826     HRDOW 0.0 0.0 0.0 0.0 0.0 0.0
EMISFACT L0001827     HRDOW 0.0 0.0 0.0 0.0 0.0 0.0
EMISFACT L0001827     HRDOW 1.0 1.0 1.0 1.0 1.0 1.0
EMISFACT L0001827     HRDOW 1.0 1.0 1.0 1.0 0.0 0.0
EMISFACT L0001827     HRDOW 0.0 0.0 0.0 0.0 0.0 0.0
EMISFACT L0001828     HRDOW 0.0 0.0 0.0 0.0 0.0 0.0
EMISFACT L0001828     HRDOW 1.0 1.0 1.0 1.0 1.0 1.0
EMISFACT L0001828     HRDOW 1.0 1.0 1.0 1.0 0.0 0.0
EMISFACT L0001828     HRDOW 0.0 0.0 0.0 0.0 0.0 0.0
EMISFACT L0001829     HRDOW 0.0 0.0 0.0 0.0 0.0 0.0
EMISFACT L0001829     HRDOW 1.0 1.0 1.0 1.0 1.0 1.0
EMISFACT L0001829     HRDOW 1.0 1.0 1.0 1.0 0.0 0.0
EMISFACT L0001829     HRDOW 0.0 0.0 0.0 0.0 0.0 0.0
EMISFACT L0001830     HRDOW 0.0 0.0 0.0 0.0 0.0 0.0
EMISFACT L0001830     HRDOW 1.0 1.0 1.0 1.0 1.0 1.0
EMISFACT L0001830     HRDOW 1.0 1.0 1.0 1.0 0.0 0.0
EMISFACT L0001830     HRDOW 0.0 0.0 0.0 0.0 0.0 0.0
EMISFACT L0001831     HRDOW 0.0 0.0 0.0 0.0 0.0 0.0
EMISFACT L0001831     HRDOW 1.0 1.0 1.0 1.0 1.0 1.0
EMISFACT L0001831     HRDOW 1.0 1.0 1.0 1.0 0.0 0.0
EMISFACT L0001831     HRDOW 0.0 0.0 0.0 0.0 0.0 0.0
EMISFACT L0001832     HRDOW 0.0 0.0 0.0 0.0 0.0 0.0
EMISFACT L0001832     HRDOW 1.0 1.0 1.0 1.0 1.0 1.0
EMISFACT L0001832     HRDOW 1.0 1.0 1.0 1.0 0.0 0.0
EMISFACT L0001832     HRDOW 0.0 0.0 0.0 0.0 0.0 0.0
EMISFACT L0001833     HRDOW 0.0 0.0 0.0 0.0 0.0 0.0
EMISFACT L0001833     HRDOW 1.0 1.0 1.0 1.0 1.0 1.0
EMISFACT L0001833     HRDOW 1.0 1.0 1.0 1.0 0.0 0.0
EMISFACT L0001833     HRDOW 0.0 0.0 0.0 0.0 0.0 0.0
EMISFACT L0001834     HRDOW 0.0 0.0 0.0 0.0 0.0 0.0
EMISFACT L0001834     HRDOW 1.0 1.0 1.0 1.0 1.0 1.0
```

```
   EMISFACT L0001834     HRDOW 1.0 1.0 1.0 1.0 0.0 0.0
   EMISFACT L0001834     HRDOW 0.0 0.0 0.0 0.0 0.0 0.0
   EMISFACT L0001835     HRDOW 0.0 0.0 0.0 0.0 0.0 0.0
   EMISFACT L0001835     HRDOW 1.0 1.0 1.0 1.0 1.0 1.0
   EMISFACT L0001835     HRDOW 1.0 1.0 1.0 1.0 0.0 0.0
   EMISFACT L0001835     HRDOW 0.0 0.0 0.0 0.0 0.0 0.0
   EMISFACT L0001836     HRDOW 0.0 0.0 0.0 0.0 0.0 0.0
   EMISFACT L0001836     HRDOW 1.0 1.0 1.0 1.0 1.0 1.0
   EMISFACT L0001836     HRDOW 1.0 1.0 1.0 1.0 0.0 0.0
   EMISFACT L0001836     HRDOW 0.0 0.0 0.0 0.0 0.0 0.0
   EMISFACT L0001837     HRDOW 0.0 0.0 0.0 0.0 0.0 0.0
   EMISFACT L0001837     HRDOW 1.0 1.0 1.0 1.0 1.0 1.0
   EMISFACT L0001837     HRDOW 1.0 1.0 1.0 1.0 0.0 0.0
   EMISFACT L0001837     HRDOW 0.0 0.0 0.0 0.0 0.0 0.0
   EMISFACT L0001838     HRDOW 0.0 0.0 0.0 0.0 0.0 0.0
   EMISFACT L0001838     HRDOW 1.0 1.0 1.0 1.0 1.0 1.0
   EMISFACT L0001838     HRDOW 1.0 1.0 1.0 1.0 0.0 0.0
   EMISFACT L0001838     HRDOW 0.0 0.0 0.0 0.0 0.0 0.0
   EMISFACT L0001839     HRDOW 0.0 0.0 0.0 0.0 0.0 0.0
   EMISFACT L0001839     HRDOW 1.0 1.0 1.0 1.0 1.0 1.0
   EMISFACT L0001839     HRDOW 1.0 1.0 1.0 1.0 0.0 0.0
   EMISFACT L0001839     HRDOW 0.0 0.0 0.0 0.0 0.0 0.0
   EMISFACT L0001840     HRDOW 0.0 0.0 0.0 0.0 0.0 0.0
   EMISFACT L0001840     HRDOW 1.0 1.0 1.0 1.0 1.0 1.0
   EMISFACT L0001840     HRDOW 1.0 1.0 1.0 1.0 0.0 0.0
   EMISFACT L0001840     HRDOW 0.0 0.0 0.0 0.0 0.0 0.0
   EMISFACT L0001841     HRDOW 0.0 0.0 0.0 0.0 0.0 0.0
   EMISFACT L0001841     HRDOW 1.0 1.0 1.0 1.0 1.0 1.0
   EMISFACT L0001841     HRDOW 1.0 1.0 1.0 1.0 0.0 0.0
   EMISFACT L0001841     HRDOW 0.0 0.0 0.0 0.0 0.0 0.0
   EMISFACT L0001842     HRDOW 0.0 0.0 0.0 0.0 0.0 0.0
   EMISFACT L0001842     HRDOW 1.0 1.0 1.0 1.0 1.0 1.0
   EMISFACT L0001842     HRDOW 1.0 1.0 1.0 1.0 0.0 0.0
   EMISFACT L0001842     HRDOW 0.0 0.0 0.0 0.0 0.0 0.0
** Saturday:
   EMISFACT L0001804     HRDOW 0.0 0.0 0.0 0.0 0.0 0.0
   EMISFACT L0001804     HRDOW 0.0 0.0 0.0 0.0 0.0 0.0
   EMISFACT L0001804     HRDOW 0.0 0.0 0.0 0.0 0.0 0.0
   EMISFACT L0001804     HRDOW 0.0 0.0 0.0 0.0 0.0 0.0
   EMISFACT L0001805     HRDOW 0.0 0.0 0.0 0.0 0.0 0.0
   EMISFACT L0001805     HRDOW 0.0 0.0 0.0 0.0 0.0 0.0
   EMISFACT L0001805     HRDOW 0.0 0.0 0.0 0.0 0.0 0.0
   EMISFACT L0001805     HRDOW 0.0 0.0 0.0 0.0 0.0 0.0
   EMISFACT L0001806     HRDOW 0.0 0.0 0.0 0.0 0.0 0.0
   EMISFACT L0001806     HRDOW 0.0 0.0 0.0 0.0 0.0 0.0
   EMISFACT L0001806     HRDOW 0.0 0.0 0.0 0.0 0.0 0.0
   EMISFACT L0001806     HRDOW 0.0 0.0 0.0 0.0 0.0 0.0
   EMISFACT L0001807     HRDOW 0.0 0.0 0.0 0.0 0.0 0.0
   EMISFACT L0001807     HRDOW 0.0 0.0 0.0 0.0 0.0 0.0
   EMISFACT L0001807     HRDOW 0.0 0.0 0.0 0.0 0.0 0.0
   EMISFACT L0001807     HRDOW 0.0 0.0 0.0 0.0 0.0 0.0
   EMISFACT L0001808     HRDOW 0.0 0.0 0.0 0.0 0.0 0.0
   EMISFACT L0001808     HRDOW 0.0 0.0 0.0 0.0 0.0 0.0
   EMISFACT L0001808     HRDOW 0.0 0.0 0.0 0.0 0.0 0.0
   EMISFACT L0001808     HRDOW 0.0 0.0 0.0 0.0 0.0 0.0
   EMISFACT L0001809     HRDOW 0.0 0.0 0.0 0.0 0.0 0.0
   EMISFACT L0001809     HRDOW 0.0 0.0 0.0 0.0 0.0 0.0
   EMISFACT L0001809     HRDOW 0.0 0.0 0.0 0.0 0.0 0.0
   EMISFACT L0001809     HRDOW 0.0 0.0 0.0 0.0 0.0 0.0
```

```
EMISFACT L0001810     HRDOW 0.0 0.0 0.0 0.0 0.0 0.0
EMISFACT L0001810     HRDOW 0.0 0.0 0.0 0.0 0.0 0.0
EMISFACT L0001810     HRDOW 0.0 0.0 0.0 0.0 0.0 0.0
EMISFACT L0001810     HRDOW 0.0 0.0 0.0 0.0 0.0 0.0
EMISFACT L0001811     HRDOW 0.0 0.0 0.0 0.0 0.0 0.0
EMISFACT L0001811     HRDOW 0.0 0.0 0.0 0.0 0.0 0.0
EMISFACT L0001811     HRDOW 0.0 0.0 0.0 0.0 0.0 0.0
EMISFACT L0001811     HRDOW 0.0 0.0 0.0 0.0 0.0 0.0
EMISFACT L0001812     HRDOW 0.0 0.0 0.0 0.0 0.0 0.0
EMISFACT L0001812     HRDOW 0.0 0.0 0.0 0.0 0.0 0.0
EMISFACT L0001812     HRDOW 0.0 0.0 0.0 0.0 0.0 0.0
EMISFACT L0001812     HRDOW 0.0 0.0 0.0 0.0 0.0 0.0
EMISFACT L0001813     HRDOW 0.0 0.0 0.0 0.0 0.0 0.0
EMISFACT L0001813     HRDOW 0.0 0.0 0.0 0.0 0.0 0.0
EMISFACT L0001813     HRDOW 0.0 0.0 0.0 0.0 0.0 0.0
EMISFACT L0001813     HRDOW 0.0 0.0 0.0 0.0 0.0 0.0
EMISFACT L0001814     HRDOW 0.0 0.0 0.0 0.0 0.0 0.0
EMISFACT L0001814     HRDOW 0.0 0.0 0.0 0.0 0.0 0.0
EMISFACT L0001814     HRDOW 0.0 0.0 0.0 0.0 0.0 0.0
EMISFACT L0001814     HRDOW 0.0 0.0 0.0 0.0 0.0 0.0
EMISFACT L0001815     HRDOW 0.0 0.0 0.0 0.0 0.0 0.0
EMISFACT L0001815     HRDOW 0.0 0.0 0.0 0.0 0.0 0.0
EMISFACT L0001815     HRDOW 0.0 0.0 0.0 0.0 0.0 0.0
EMISFACT L0001815     HRDOW 0.0 0.0 0.0 0.0 0.0 0.0
EMISFACT L0001816     HRDOW 0.0 0.0 0.0 0.0 0.0 0.0
EMISFACT L0001816     HRDOW 0.0 0.0 0.0 0.0 0.0 0.0
EMISFACT L0001816     HRDOW 0.0 0.0 0.0 0.0 0.0 0.0
EMISFACT L0001816     HRDOW 0.0 0.0 0.0 0.0 0.0 0.0
EMISFACT L0001817     HRDOW 0.0 0.0 0.0 0.0 0.0 0.0
EMISFACT L0001817     HRDOW 0.0 0.0 0.0 0.0 0.0 0.0
EMISFACT L0001817     HRDOW 0.0 0.0 0.0 0.0 0.0 0.0
EMISFACT L0001817     HRDOW 0.0 0.0 0.0 0.0 0.0 0.0
EMISFACT L0001818     HRDOW 0.0 0.0 0.0 0.0 0.0 0.0
EMISFACT L0001818     HRDOW 0.0 0.0 0.0 0.0 0.0 0.0
EMISFACT L0001818     HRDOW 0.0 0.0 0.0 0.0 0.0 0.0
EMISFACT L0001818     HRDOW 0.0 0.0 0.0 0.0 0.0 0.0
EMISFACT L0001819     HRDOW 0.0 0.0 0.0 0.0 0.0 0.0
EMISFACT L0001819     HRDOW 0.0 0.0 0.0 0.0 0.0 0.0
EMISFACT L0001819     HRDOW 0.0 0.0 0.0 0.0 0.0 0.0
EMISFACT L0001819     HRDOW 0.0 0.0 0.0 0.0 0.0 0.0
EMISFACT L0001820     HRDOW 0.0 0.0 0.0 0.0 0.0 0.0
EMISFACT L0001820     HRDOW 0.0 0.0 0.0 0.0 0.0 0.0
EMISFACT L0001820     HRDOW 0.0 0.0 0.0 0.0 0.0 0.0
EMISFACT L0001820     HRDOW 0.0 0.0 0.0 0.0 0.0 0.0
EMISFACT L0001821     HRDOW 0.0 0.0 0.0 0.0 0.0 0.0
EMISFACT L0001821     HRDOW 0.0 0.0 0.0 0.0 0.0 0.0
EMISFACT L0001821     HRDOW 0.0 0.0 0.0 0.0 0.0 0.0
EMISFACT L0001821     HRDOW 0.0 0.0 0.0 0.0 0.0 0.0
EMISFACT L0001822     HRDOW 0.0 0.0 0.0 0.0 0.0 0.0
EMISFACT L0001822     HRDOW 0.0 0.0 0.0 0.0 0.0 0.0
EMISFACT L0001822     HRDOW 0.0 0.0 0.0 0.0 0.0 0.0
EMISFACT L0001822     HRDOW 0.0 0.0 0.0 0.0 0.0 0.0
EMISFACT L0001823     HRDOW 0.0 0.0 0.0 0.0 0.0 0.0
EMISFACT L0001823     HRDOW 0.0 0.0 0.0 0.0 0.0 0.0
EMISFACT L0001823     HRDOW 0.0 0.0 0.0 0.0 0.0 0.0
EMISFACT L0001823     HRDOW 0.0 0.0 0.0 0.0 0.0 0.0
EMISFACT L0001824     HRDOW 0.0 0.0 0.0 0.0 0.0 0.0
EMISFACT L0001824     HRDOW 0.0 0.0 0.0 0.0 0.0 0.0
EMISFACT L0001824     HRDOW 0.0 0.0 0.0 0.0 0.0 0.0
```

```
EMISFACT L0001824     HRDOW 0.0 0.0 0.0 0.0 0.0 0.0
EMISFACT L0001825     HRDOW 0.0 0.0 0.0 0.0 0.0 0.0
EMISFACT L0001825     HRDOW 0.0 0.0 0.0 0.0 0.0 0.0
EMISFACT L0001825     HRDOW 0.0 0.0 0.0 0.0 0.0 0.0
EMISFACT L0001825     HRDOW 0.0 0.0 0.0 0.0 0.0 0.0
EMISFACT L0001826     HRDOW 0.0 0.0 0.0 0.0 0.0 0.0
EMISFACT L0001826     HRDOW 0.0 0.0 0.0 0.0 0.0 0.0
EMISFACT L0001826     HRDOW 0.0 0.0 0.0 0.0 0.0 0.0
EMISFACT L0001826     HRDOW 0.0 0.0 0.0 0.0 0.0 0.0
EMISFACT L0001827     HRDOW 0.0 0.0 0.0 0.0 0.0 0.0
EMISFACT L0001827     HRDOW 0.0 0.0 0.0 0.0 0.0 0.0
EMISFACT L0001827     HRDOW 0.0 0.0 0.0 0.0 0.0 0.0
EMISFACT L0001827     HRDOW 0.0 0.0 0.0 0.0 0.0 0.0
EMISFACT L0001828     HRDOW 0.0 0.0 0.0 0.0 0.0 0.0
EMISFACT L0001828     HRDOW 0.0 0.0 0.0 0.0 0.0 0.0
EMISFACT L0001828     HRDOW 0.0 0.0 0.0 0.0 0.0 0.0
EMISFACT L0001828     HRDOW 0.0 0.0 0.0 0.0 0.0 0.0
EMISFACT L0001829     HRDOW 0.0 0.0 0.0 0.0 0.0 0.0
EMISFACT L0001829     HRDOW 0.0 0.0 0.0 0.0 0.0 0.0
EMISFACT L0001829     HRDOW 0.0 0.0 0.0 0.0 0.0 0.0
EMISFACT L0001829     HRDOW 0.0 0.0 0.0 0.0 0.0 0.0
EMISFACT L0001830     HRDOW 0.0 0.0 0.0 0.0 0.0 0.0
EMISFACT L0001830     HRDOW 0.0 0.0 0.0 0.0 0.0 0.0
EMISFACT L0001830     HRDOW 0.0 0.0 0.0 0.0 0.0 0.0
EMISFACT L0001830     HRDOW 0.0 0.0 0.0 0.0 0.0 0.0
EMISFACT L0001831     HRDOW 0.0 0.0 0.0 0.0 0.0 0.0
EMISFACT L0001831     HRDOW 0.0 0.0 0.0 0.0 0.0 0.0
EMISFACT L0001831     HRDOW 0.0 0.0 0.0 0.0 0.0 0.0
EMISFACT L0001831     HRDOW 0.0 0.0 0.0 0.0 0.0 0.0
EMISFACT L0001832     HRDOW 0.0 0.0 0.0 0.0 0.0 0.0
EMISFACT L0001832     HRDOW 0.0 0.0 0.0 0.0 0.0 0.0
EMISFACT L0001832     HRDOW 0.0 0.0 0.0 0.0 0.0 0.0
EMISFACT L0001832     HRDOW 0.0 0.0 0.0 0.0 0.0 0.0
EMISFACT L0001833     HRDOW 0.0 0.0 0.0 0.0 0.0 0.0
EMISFACT L0001833     HRDOW 0.0 0.0 0.0 0.0 0.0 0.0
EMISFACT L0001833     HRDOW 0.0 0.0 0.0 0.0 0.0 0.0
EMISFACT L0001833     HRDOW 0.0 0.0 0.0 0.0 0.0 0.0
EMISFACT L0001834     HRDOW 0.0 0.0 0.0 0.0 0.0 0.0
EMISFACT L0001834     HRDOW 0.0 0.0 0.0 0.0 0.0 0.0
EMISFACT L0001834     HRDOW 0.0 0.0 0.0 0.0 0.0 0.0
EMISFACT L0001834     HRDOW 0.0 0.0 0.0 0.0 0.0 0.0
EMISFACT L0001835     HRDOW 0.0 0.0 0.0 0.0 0.0 0.0
EMISFACT L0001835     HRDOW 0.0 0.0 0.0 0.0 0.0 0.0
EMISFACT L0001835     HRDOW 0.0 0.0 0.0 0.0 0.0 0.0
EMISFACT L0001835     HRDOW 0.0 0.0 0.0 0.0 0.0 0.0
EMISFACT L0001836     HRDOW 0.0 0.0 0.0 0.0 0.0 0.0
EMISFACT L0001836     HRDOW 0.0 0.0 0.0 0.0 0.0 0.0
EMISFACT L0001836     HRDOW 0.0 0.0 0.0 0.0 0.0 0.0
EMISFACT L0001836     HRDOW 0.0 0.0 0.0 0.0 0.0 0.0
EMISFACT L0001837     HRDOW 0.0 0.0 0.0 0.0 0.0 0.0
EMISFACT L0001837     HRDOW 0.0 0.0 0.0 0.0 0.0 0.0
EMISFACT L0001837     HRDOW 0.0 0.0 0.0 0.0 0.0 0.0
EMISFACT L0001837     HRDOW 0.0 0.0 0.0 0.0 0.0 0.0
EMISFACT L0001838     HRDOW 0.0 0.0 0.0 0.0 0.0 0.0
EMISFACT L0001838     HRDOW 0.0 0.0 0.0 0.0 0.0 0.0
EMISFACT L0001838     HRDOW 0.0 0.0 0.0 0.0 0.0 0.0
EMISFACT L0001838     HRDOW 0.0 0.0 0.0 0.0 0.0 0.0
EMISFACT L0001839     HRDOW 0.0 0.0 0.0 0.0 0.0 0.0
EMISFACT L0001839     HRDOW 0.0 0.0 0.0 0.0 0.0 0.0
```

```
   EMISFACT L0001839     HRDOW 0.0 0.0 0.0 0.0 0.0 0.0
   EMISFACT L0001839     HRDOW 0.0 0.0 0.0 0.0 0.0 0.0
   EMISFACT L0001840     HRDOW 0.0 0.0 0.0 0.0 0.0 0.0
   EMISFACT L0001840     HRDOW 0.0 0.0 0.0 0.0 0.0 0.0
   EMISFACT L0001840     HRDOW 0.0 0.0 0.0 0.0 0.0 0.0
   EMISFACT L0001840     HRDOW 0.0 0.0 0.0 0.0 0.0 0.0
   EMISFACT L0001841     HRDOW 0.0 0.0 0.0 0.0 0.0 0.0
   EMISFACT L0001841     HRDOW 0.0 0.0 0.0 0.0 0.0 0.0
   EMISFACT L0001841     HRDOW 0.0 0.0 0.0 0.0 0.0 0.0
   EMISFACT L0001841     HRDOW 0.0 0.0 0.0 0.0 0.0 0.0
   EMISFACT L0001842     HRDOW 0.0 0.0 0.0 0.0 0.0 0.0
   EMISFACT L0001842     HRDOW 0.0 0.0 0.0 0.0 0.0 0.0
   EMISFACT L0001842     HRDOW 0.0 0.0 0.0 0.0 0.0 0.0
   EMISFACT L0001842     HRDOW 0.0 0.0 0.0 0.0 0.0 0.0
** Sunday:
   EMISFACT L0001804     HRDOW 0.0 0.0 0.0 0.0 0.0 0.0
   EMISFACT L0001804     HRDOW 0.0 0.0 0.0 0.0 0.0 0.0
   EMISFACT L0001804     HRDOW 0.0 0.0 0.0 0.0 0.0 0.0
   EMISFACT L0001804     HRDOW 0.0 0.0 0.0 0.0 0.0 0.0
   EMISFACT L0001805     HRDOW 0.0 0.0 0.0 0.0 0.0 0.0
   EMISFACT L0001805     HRDOW 0.0 0.0 0.0 0.0 0.0 0.0
   EMISFACT L0001805     HRDOW 0.0 0.0 0.0 0.0 0.0 0.0
   EMISFACT L0001805     HRDOW 0.0 0.0 0.0 0.0 0.0 0.0
   EMISFACT L0001806     HRDOW 0.0 0.0 0.0 0.0 0.0 0.0
   EMISFACT L0001806     HRDOW 0.0 0.0 0.0 0.0 0.0 0.0
   EMISFACT L0001806     HRDOW 0.0 0.0 0.0 0.0 0.0 0.0
   EMISFACT L0001806     HRDOW 0.0 0.0 0.0 0.0 0.0 0.0
   EMISFACT L0001807     HRDOW 0.0 0.0 0.0 0.0 0.0 0.0
   EMISFACT L0001807     HRDOW 0.0 0.0 0.0 0.0 0.0 0.0
   EMISFACT L0001807     HRDOW 0.0 0.0 0.0 0.0 0.0 0.0
   EMISFACT L0001807     HRDOW 0.0 0.0 0.0 0.0 0.0 0.0
   EMISFACT L0001808     HRDOW 0.0 0.0 0.0 0.0 0.0 0.0
   EMISFACT L0001808     HRDOW 0.0 0.0 0.0 0.0 0.0 0.0
   EMISFACT L0001808     HRDOW 0.0 0.0 0.0 0.0 0.0 0.0
   EMISFACT L0001808     HRDOW 0.0 0.0 0.0 0.0 0.0 0.0
   EMISFACT L0001809     HRDOW 0.0 0.0 0.0 0.0 0.0 0.0
   EMISFACT L0001809     HRDOW 0.0 0.0 0.0 0.0 0.0 0.0
   EMISFACT L0001809     HRDOW 0.0 0.0 0.0 0.0 0.0 0.0
   EMISFACT L0001809     HRDOW 0.0 0.0 0.0 0.0 0.0 0.0
   EMISFACT L0001810     HRDOW 0.0 0.0 0.0 0.0 0.0 0.0
   EMISFACT L0001810     HRDOW 0.0 0.0 0.0 0.0 0.0 0.0
   EMISFACT L0001810     HRDOW 0.0 0.0 0.0 0.0 0.0 0.0
   EMISFACT L0001810     HRDOW 0.0 0.0 0.0 0.0 0.0 0.0
   EMISFACT L0001811     HRDOW 0.0 0.0 0.0 0.0 0.0 0.0
   EMISFACT L0001811     HRDOW 0.0 0.0 0.0 0.0 0.0 0.0
   EMISFACT L0001811     HRDOW 0.0 0.0 0.0 0.0 0.0 0.0
   EMISFACT L0001811     HRDOW 0.0 0.0 0.0 0.0 0.0 0.0
   EMISFACT L0001812     HRDOW 0.0 0.0 0.0 0.0 0.0 0.0
   EMISFACT L0001812     HRDOW 0.0 0.0 0.0 0.0 0.0 0.0
   EMISFACT L0001812     HRDOW 0.0 0.0 0.0 0.0 0.0 0.0
   EMISFACT L0001812     HRDOW 0.0 0.0 0.0 0.0 0.0 0.0
   EMISFACT L0001813     HRDOW 0.0 0.0 0.0 0.0 0.0 0.0
   EMISFACT L0001813     HRDOW 0.0 0.0 0.0 0.0 0.0 0.0
   EMISFACT L0001813     HRDOW 0.0 0.0 0.0 0.0 0.0 0.0
   EMISFACT L0001813     HRDOW 0.0 0.0 0.0 0.0 0.0 0.0
   EMISFACT L0001814     HRDOW 0.0 0.0 0.0 0.0 0.0 0.0
   EMISFACT L0001814     HRDOW 0.0 0.0 0.0 0.0 0.0 0.0
   EMISFACT L0001814     HRDOW 0.0 0.0 0.0 0.0 0.0 0.0
   EMISFACT L0001814     HRDOW 0.0 0.0 0.0 0.0 0.0 0.0
```

```
EMISFACT L0001815     HRDOW 0.0 0.0 0.0 0.0 0.0 0.0
EMISFACT L0001815     HRDOW 0.0 0.0 0.0 0.0 0.0 0.0
EMISFACT L0001815     HRDOW 0.0 0.0 0.0 0.0 0.0 0.0
EMISFACT L0001815     HRDOW 0.0 0.0 0.0 0.0 0.0 0.0
EMISFACT L0001816     HRDOW 0.0 0.0 0.0 0.0 0.0 0.0
EMISFACT L0001816     HRDOW 0.0 0.0 0.0 0.0 0.0 0.0
EMISFACT L0001816     HRDOW 0.0 0.0 0.0 0.0 0.0 0.0
EMISFACT L0001816     HRDOW 0.0 0.0 0.0 0.0 0.0 0.0
EMISFACT L0001817     HRDOW 0.0 0.0 0.0 0.0 0.0 0.0
EMISFACT L0001817     HRDOW 0.0 0.0 0.0 0.0 0.0 0.0
EMISFACT L0001817     HRDOW 0.0 0.0 0.0 0.0 0.0 0.0
EMISFACT L0001817     HRDOW 0.0 0.0 0.0 0.0 0.0 0.0
EMISFACT L0001818     HRDOW 0.0 0.0 0.0 0.0 0.0 0.0
EMISFACT L0001818     HRDOW 0.0 0.0 0.0 0.0 0.0 0.0
EMISFACT L0001818     HRDOW 0.0 0.0 0.0 0.0 0.0 0.0
EMISFACT L0001818     HRDOW 0.0 0.0 0.0 0.0 0.0 0.0
EMISFACT L0001819     HRDOW 0.0 0.0 0.0 0.0 0.0 0.0
EMISFACT L0001819     HRDOW 0.0 0.0 0.0 0.0 0.0 0.0
EMISFACT L0001819     HRDOW 0.0 0.0 0.0 0.0 0.0 0.0
EMISFACT L0001819     HRDOW 0.0 0.0 0.0 0.0 0.0 0.0
EMISFACT L0001820     HRDOW 0.0 0.0 0.0 0.0 0.0 0.0
EMISFACT L0001820     HRDOW 0.0 0.0 0.0 0.0 0.0 0.0
EMISFACT L0001820     HRDOW 0.0 0.0 0.0 0.0 0.0 0.0
EMISFACT L0001820     HRDOW 0.0 0.0 0.0 0.0 0.0 0.0
EMISFACT L0001821     HRDOW 0.0 0.0 0.0 0.0 0.0 0.0
EMISFACT L0001821     HRDOW 0.0 0.0 0.0 0.0 0.0 0.0
EMISFACT L0001821     HRDOW 0.0 0.0 0.0 0.0 0.0 0.0
EMISFACT L0001821     HRDOW 0.0 0.0 0.0 0.0 0.0 0.0
EMISFACT L0001822     HRDOW 0.0 0.0 0.0 0.0 0.0 0.0
EMISFACT L0001822     HRDOW 0.0 0.0 0.0 0.0 0.0 0.0
EMISFACT L0001822     HRDOW 0.0 0.0 0.0 0.0 0.0 0.0
EMISFACT L0001822     HRDOW 0.0 0.0 0.0 0.0 0.0 0.0
EMISFACT L0001823     HRDOW 0.0 0.0 0.0 0.0 0.0 0.0
EMISFACT L0001823     HRDOW 0.0 0.0 0.0 0.0 0.0 0.0
EMISFACT L0001823     HRDOW 0.0 0.0 0.0 0.0 0.0 0.0
EMISFACT L0001823     HRDOW 0.0 0.0 0.0 0.0 0.0 0.0
EMISFACT L0001824     HRDOW 0.0 0.0 0.0 0.0 0.0 0.0
EMISFACT L0001824     HRDOW 0.0 0.0 0.0 0.0 0.0 0.0
EMISFACT L0001824     HRDOW 0.0 0.0 0.0 0.0 0.0 0.0
EMISFACT L0001824     HRDOW 0.0 0.0 0.0 0.0 0.0 0.0
EMISFACT L0001825     HRDOW 0.0 0.0 0.0 0.0 0.0 0.0
EMISFACT L0001825     HRDOW 0.0 0.0 0.0 0.0 0.0 0.0
EMISFACT L0001825     HRDOW 0.0 0.0 0.0 0.0 0.0 0.0
EMISFACT L0001825     HRDOW 0.0 0.0 0.0 0.0 0.0 0.0
EMISFACT L0001826     HRDOW 0.0 0.0 0.0 0.0 0.0 0.0
EMISFACT L0001826     HRDOW 0.0 0.0 0.0 0.0 0.0 0.0
EMISFACT L0001826     HRDOW 0.0 0.0 0.0 0.0 0.0 0.0
EMISFACT L0001826     HRDOW 0.0 0.0 0.0 0.0 0.0 0.0
EMISFACT L0001827     HRDOW 0.0 0.0 0.0 0.0 0.0 0.0
EMISFACT L0001827     HRDOW 0.0 0.0 0.0 0.0 0.0 0.0
EMISFACT L0001827     HRDOW 0.0 0.0 0.0 0.0 0.0 0.0
EMISFACT L0001827     HRDOW 0.0 0.0 0.0 0.0 0.0 0.0
EMISFACT L0001828     HRDOW 0.0 0.0 0.0 0.0 0.0 0.0
EMISFACT L0001828     HRDOW 0.0 0.0 0.0 0.0 0.0 0.0
EMISFACT L0001828     HRDOW 0.0 0.0 0.0 0.0 0.0 0.0
EMISFACT L0001828     HRDOW 0.0 0.0 0.0 0.0 0.0 0.0
EMISFACT L0001829     HRDOW 0.0 0.0 0.0 0.0 0.0 0.0
EMISFACT L0001829     HRDOW 0.0 0.0 0.0 0.0 0.0 0.0
EMISFACT L0001829     HRDOW 0.0 0.0 0.0 0.0 0.0 0.0
```

```
   EMISFACT L0001829     HRDOW 0.0 0.0 0.0 0.0 0.0 0.0
   EMISFACT L0001830     HRDOW 0.0 0.0 0.0 0.0 0.0 0.0
   EMISFACT L0001830     HRDOW 0.0 0.0 0.0 0.0 0.0 0.0
   EMISFACT L0001830     HRDOW 0.0 0.0 0.0 0.0 0.0 0.0
   EMISFACT L0001830     HRDOW 0.0 0.0 0.0 0.0 0.0 0.0
   EMISFACT L0001831     HRDOW 0.0 0.0 0.0 0.0 0.0 0.0
   EMISFACT L0001831     HRDOW 0.0 0.0 0.0 0.0 0.0 0.0
   EMISFACT L0001831     HRDOW 0.0 0.0 0.0 0.0 0.0 0.0
   EMISFACT L0001831     HRDOW 0.0 0.0 0.0 0.0 0.0 0.0
   EMISFACT L0001832     HRDOW 0.0 0.0 0.0 0.0 0.0 0.0
   EMISFACT L0001832     HRDOW 0.0 0.0 0.0 0.0 0.0 0.0
   EMISFACT L0001832     HRDOW 0.0 0.0 0.0 0.0 0.0 0.0
   EMISFACT L0001832     HRDOW 0.0 0.0 0.0 0.0 0.0 0.0
   EMISFACT L0001833     HRDOW 0.0 0.0 0.0 0.0 0.0 0.0
   EMISFACT L0001833     HRDOW 0.0 0.0 0.0 0.0 0.0 0.0
   EMISFACT L0001833     HRDOW 0.0 0.0 0.0 0.0 0.0 0.0
   EMISFACT L0001833     HRDOW 0.0 0.0 0.0 0.0 0.0 0.0
   EMISFACT L0001834     HRDOW 0.0 0.0 0.0 0.0 0.0 0.0
   EMISFACT L0001834     HRDOW 0.0 0.0 0.0 0.0 0.0 0.0
   EMISFACT L0001834     HRDOW 0.0 0.0 0.0 0.0 0.0 0.0
   EMISFACT L0001834     HRDOW 0.0 0.0 0.0 0.0 0.0 0.0
   EMISFACT L0001835     HRDOW 0.0 0.0 0.0 0.0 0.0 0.0
   EMISFACT L0001835     HRDOW 0.0 0.0 0.0 0.0 0.0 0.0
   EMISFACT L0001835     HRDOW 0.0 0.0 0.0 0.0 0.0 0.0
   EMISFACT L0001835     HRDOW 0.0 0.0 0.0 0.0 0.0 0.0
   EMISFACT L0001836     HRDOW 0.0 0.0 0.0 0.0 0.0 0.0
   EMISFACT L0001836     HRDOW 0.0 0.0 0.0 0.0 0.0 0.0
   EMISFACT L0001836     HRDOW 0.0 0.0 0.0 0.0 0.0 0.0
   EMISFACT L0001836     HRDOW 0.0 0.0 0.0 0.0 0.0 0.0
   EMISFACT L0001837     HRDOW 0.0 0.0 0.0 0.0 0.0 0.0
   EMISFACT L0001837     HRDOW 0.0 0.0 0.0 0.0 0.0 0.0
   EMISFACT L0001837     HRDOW 0.0 0.0 0.0 0.0 0.0 0.0
   EMISFACT L0001837     HRDOW 0.0 0.0 0.0 0.0 0.0 0.0
   EMISFACT L0001838     HRDOW 0.0 0.0 0.0 0.0 0.0 0.0
   EMISFACT L0001838     HRDOW 0.0 0.0 0.0 0.0 0.0 0.0
   EMISFACT L0001838     HRDOW 0.0 0.0 0.0 0.0 0.0 0.0
   EMISFACT L0001838     HRDOW 0.0 0.0 0.0 0.0 0.0 0.0
   EMISFACT L0001839     HRDOW 0.0 0.0 0.0 0.0 0.0 0.0
   EMISFACT L0001839     HRDOW 0.0 0.0 0.0 0.0 0.0 0.0
   EMISFACT L0001839     HRDOW 0.0 0.0 0.0 0.0 0.0 0.0
   EMISFACT L0001839     HRDOW 0.0 0.0 0.0 0.0 0.0 0.0
   EMISFACT L0001840     HRDOW 0.0 0.0 0.0 0.0 0.0 0.0
   EMISFACT L0001840     HRDOW 0.0 0.0 0.0 0.0 0.0 0.0
   EMISFACT L0001840     HRDOW 0.0 0.0 0.0 0.0 0.0 0.0
   EMISFACT L0001840     HRDOW 0.0 0.0 0.0 0.0 0.0 0.0
   EMISFACT L0001841     HRDOW 0.0 0.0 0.0 0.0 0.0 0.0
   EMISFACT L0001841     HRDOW 0.0 0.0 0.0 0.0 0.0 0.0
   EMISFACT L0001841     HRDOW 0.0 0.0 0.0 0.0 0.0 0.0
   EMISFACT L0001841     HRDOW 0.0 0.0 0.0 0.0 0.0 0.0
   EMISFACT L0001842     HRDOW 0.0 0.0 0.0 0.0 0.0 0.0
   EMISFACT L0001842     HRDOW 0.0 0.0 0.0 0.0 0.0 0.0
   EMISFACT L0001842     HRDOW 0.0 0.0 0.0 0.0 0.0 0.0
   EMISFACT L0001842     HRDOW 0.0 0.0 0.0 0.0 0.0 0.0
** WeekDays:
   EMISFACT L0001843     HRDOW 0.0 0.0 0.0 0.0 0.0 0.0
   EMISFACT L0001843     HRDOW 1.0 1.0 1.0 1.0 1.0 1.0
   EMISFACT L0001843     HRDOW 1.0 1.0 1.0 1.0 0.0 0.0
   EMISFACT L0001843     HRDOW 0.0 0.0 0.0 0.0 0.0 0.0
   EMISFACT L0001844     HRDOW 0.0 0.0 0.0 0.0 0.0 0.0
```

```
   EMISFACT L0001844     HRDOW 1.0 1.0 1.0 1.0 1.0 1.0
   EMISFACT L0001844     HRDOW 1.0 1.0 1.0 1.0 0.0 0.0
   EMISFACT L0001844     HRDOW 0.0 0.0 0.0 0.0 0.0 0.0
** Saturday:
   EMISFACT L0001843     HRDOW 0.0 0.0 0.0 0.0 0.0 0.0
   EMISFACT L0001843     HRDOW 0.0 0.0 0.0 0.0 0.0 0.0
   EMISFACT L0001843     HRDOW 0.0 0.0 0.0 0.0 0.0 0.0
   EMISFACT L0001843     HRDOW 0.0 0.0 0.0 0.0 0.0 0.0
   EMISFACT L0001844     HRDOW 0.0 0.0 0.0 0.0 0.0 0.0
   EMISFACT L0001844     HRDOW 0.0 0.0 0.0 0.0 0.0 0.0
   EMISFACT L0001844     HRDOW 0.0 0.0 0.0 0.0 0.0 0.0
   EMISFACT L0001844     HRDOW 0.0 0.0 0.0 0.0 0.0 0.0
** Sunday:
   EMISFACT L0001843     HRDOW 0.0 0.0 0.0 0.0 0.0 0.0
   EMISFACT L0001843     HRDOW 0.0 0.0 0.0 0.0 0.0 0.0
   EMISFACT L0001843     HRDOW 0.0 0.0 0.0 0.0 0.0 0.0
   EMISFACT L0001843     HRDOW 0.0 0.0 0.0 0.0 0.0 0.0
   EMISFACT L0001844     HRDOW 0.0 0.0 0.0 0.0 0.0 0.0
   EMISFACT L0001844     HRDOW 0.0 0.0 0.0 0.0 0.0 0.0
   EMISFACT L0001844     HRDOW 0.0 0.0 0.0 0.0 0.0 0.0
   EMISFACT L0001844     HRDOW 0.0 0.0 0.0 0.0 0.0 0.0
** WeekDays:
   EMISFACT JS           HRDOW 0.0 0.0 0.0 0.0 0.0 0.0
   EMISFACT JS           HRDOW 1.0 1.0 1.0 1.0 1.0 1.0
   EMISFACT JS           HRDOW 1.0 1.0 1.0 1.0 0.0 0.0
   EMISFACT JS           HRDOW 0.0 0.0 0.0 0.0 0.0 0.0
** Saturday:
   EMISFACT JS           HRDOW 0.0 0.0 0.0 0.0 0.0 0.0
   EMISFACT JS           HRDOW 0.0 0.0 0.0 0.0 0.0 0.0
   EMISFACT JS           HRDOW 0.0 0.0 0.0 0.0 0.0 0.0
   EMISFACT JS           HRDOW 0.0 0.0 0.0 0.0 0.0 0.0
** Sunday:
   EMISFACT JS           HRDOW 0.0 0.0 0.0 0.0 0.0 0.0
   EMISFACT JS           HRDOW 0.0 0.0 0.0 0.0 0.0 0.0
   EMISFACT JS           HRDOW 0.0 0.0 0.0 0.0 0.0 0.0
   EMISFACT JS           HRDOW 0.0 0.0 0.0 0.0 0.0 0.0
** WeekDays:
   EMISFACT FES          HRDOW 0.0 0.0 0.0 0.0 0.0 0.0
   EMISFACT FES          HRDOW 1.0 1.0 1.0 1.0 1.0 1.0
   EMISFACT FES          HRDOW 1.0 1.0 1.0 1.0 0.0 0.0
   EMISFACT FES          HRDOW 0.0 0.0 0.0 0.0 0.0 0.0
** Saturday:
   EMISFACT FES          HRDOW 0.0 0.0 0.0 0.0 0.0 0.0
   EMISFACT FES          HRDOW 0.0 0.0 0.0 0.0 0.0 0.0
   EMISFACT FES          HRDOW 0.0 0.0 0.0 0.0 0.0 0.0
   EMISFACT FES          HRDOW 0.0 0.0 0.0 0.0 0.0 0.0
** Sunday:
   EMISFACT FES          HRDOW 0.0 0.0 0.0 0.0 0.0 0.0
   EMISFACT FES          HRDOW 0.0 0.0 0.0 0.0 0.0 0.0
   EMISFACT FES          HRDOW 0.0 0.0 0.0 0.0 0.0 0.0
   EMISFACT FES          HRDOW 0.0 0.0 0.0 0.0 0.0 0.0
** WeekDays:
   EMISFACT EG           HRDOW 0.0 0.0 0.0 0.0 0.0 0.0
   EMISFACT EG           HRDOW 1.0 1.0 1.0 1.0 1.0 1.0
   EMISFACT EG           HRDOW 1.0 1.0 1.0 1.0 0.0 0.0
   EMISFACT EG           HRDOW 0.0 0.0 0.0 0.0 0.0 0.0
** Saturday:
   EMISFACT EG           HRDOW 0.0 0.0 0.0 0.0 0.0 0.0
   EMISFACT EG           HRDOW 0.0 0.0 0.0 0.0 0.0 0.0
```

```
   EMISFACT EG           HRDOW 0.0 0.0 0.0 0.0 0.0 0.0
   EMISFACT EG           HRDOW 0.0 0.0 0.0 0.0 0.0 0.0
** Sunday:
   EMISFACT EG           HRDOW 0.0 0.0 0.0 0.0 0.0 0.0
   EMISFACT EG           HRDOW 0.0 0.0 0.0 0.0 0.0 0.0
   EMISFACT EG           HRDOW 0.0 0.0 0.0 0.0 0.0 0.0
   EMISFACT EG           HRDOW 0.0 0.0 0.0 0.0 0.0 0.0
** WeekDays:
   EMISFACT STT          HRDOW 0.0 0.0 0.0 0.0 0.0 0.0
   EMISFACT STT          HRDOW 1.0 1.0 1.0 1.0 1.0 1.0
   EMISFACT STT          HRDOW 1.0 1.0 1.0 1.0 0.0 0.0
   EMISFACT STT          HRDOW 0.0 0.0 0.0 0.0 0.0 0.0
** Saturday:
   EMISFACT STT          HRDOW 0.0 0.0 0.0 0.0 0.0 0.0
   EMISFACT STT          HRDOW 0.0 0.0 0.0 0.0 0.0 0.0
   EMISFACT STT          HRDOW 0.0 0.0 0.0 0.0 0.0 0.0
   EMISFACT STT          HRDOW 0.0 0.0 0.0 0.0 0.0 0.0
** Sunday:
   EMISFACT STT          HRDOW 0.0 0.0 0.0 0.0 0.0 0.0
   EMISFACT STT          HRDOW 0.0 0.0 0.0 0.0 0.0 0.0
   EMISFACT STT          HRDOW 0.0 0.0 0.0 0.0 0.0 0.0
   EMISFACT STT          HRDOW 0.0 0.0 0.0 0.0 0.0 0.0
** WeekDays:
   EMISFACT ABWQL        HRDOW 0.0 0.0 0.0 0.0 0.0 0.0
   EMISFACT ABWQL        HRDOW 1.0 1.0 1.0 1.0 1.0 1.0
   EMISFACT ABWQL        HRDOW 1.0 1.0 1.0 1.0 0.0 0.0
   EMISFACT ABWQL        HRDOW 0.0 0.0 0.0 0.0 0.0 0.0
** Saturday:
   EMISFACT ABWQL        HRDOW 0.0 0.0 0.0 0.0 0.0 0.0
   EMISFACT ABWQL        HRDOW 0.0 0.0 0.0 0.0 0.0 0.0
   EMISFACT ABWQL        HRDOW 0.0 0.0 0.0 0.0 0.0 0.0
   EMISFACT ABWQL        HRDOW 0.0 0.0 0.0 0.0 0.0 0.0
** Sunday:
   EMISFACT ABWQL        HRDOW 0.0 0.0 0.0 0.0 0.0 0.0
   EMISFACT ABWQL        HRDOW 0.0 0.0 0.0 0.0 0.0 0.0
   EMISFACT ABWQL        HRDOW 0.0 0.0 0.0 0.0 0.0 0.0
   EMISFACT ABWQL        HRDOW 0.0 0.0 0.0 0.0 0.0 0.0
** WeekDays:
   EMISFACT PS           HRDOW 0.0 0.0 0.0 0.0 0.0 0.0
   EMISFACT PS           HRDOW 1.0 1.0 1.0 1.0 1.0 1.0
   EMISFACT PS           HRDOW 1.0 1.0 1.0 1.0 0.0 0.0
   EMISFACT PS           HRDOW 0.0 0.0 0.0 0.0 0.0 0.0
** Saturday:
   EMISFACT PS           HRDOW 0.0 0.0 0.0 0.0 0.0 0.0
   EMISFACT PS           HRDOW 0.0 0.0 0.0 0.0 0.0 0.0
   EMISFACT PS           HRDOW 0.0 0.0 0.0 0.0 0.0 0.0
   EMISFACT PS           HRDOW 0.0 0.0 0.0 0.0 0.0 0.0
** Sunday:
   EMISFACT PS           HRDOW 0.0 0.0 0.0 0.0 0.0 0.0
   EMISFACT PS           HRDOW 0.0 0.0 0.0 0.0 0.0 0.0
   EMISFACT PS           HRDOW 0.0 0.0 0.0 0.0 0.0 0.0
   EMISFACT PS           HRDOW 0.0 0.0 0.0 0.0 0.0 0.0
** WeekDays:
   EMISFACT L0001845     HRDOW 0.0 0.0 0.0 0.0 0.0 0.0
   EMISFACT L0001845     HRDOW 1.0 1.0 1.0 1.0 1.0 1.0
   EMISFACT L0001845     HRDOW 1.0 1.0 1.0 1.0 0.0 0.0
   EMISFACT L0001845     HRDOW 0.0 0.0 0.0 0.0 0.0 0.0
   EMISFACT L0001846     HRDOW 0.0 0.0 0.0 0.0 0.0 0.0
   EMISFACT L0001846     HRDOW 1.0 1.0 1.0 1.0 1.0 1.0
```

```
EMISFACT L0001846     HRDOW 1.0 1.0 1.0 1.0 0.0 0.0
EMISFACT L0001846     HRDOW 0.0 0.0 0.0 0.0 0.0 0.0
EMISFACT L0001847     HRDOW 0.0 0.0 0.0 0.0 0.0 0.0
EMISFACT L0001847     HRDOW 1.0 1.0 1.0 1.0 1.0 1.0
EMISFACT L0001847     HRDOW 1.0 1.0 1.0 1.0 0.0 0.0
EMISFACT L0001847     HRDOW 0.0 0.0 0.0 0.0 0.0 0.0
EMISFACT L0001848     HRDOW 0.0 0.0 0.0 0.0 0.0 0.0
EMISFACT L0001848     HRDOW 1.0 1.0 1.0 1.0 1.0 1.0
EMISFACT L0001848     HRDOW 1.0 1.0 1.0 1.0 0.0 0.0
EMISFACT L0001848     HRDOW 0.0 0.0 0.0 0.0 0.0 0.0
EMISFACT L0001849     HRDOW 0.0 0.0 0.0 0.0 0.0 0.0
EMISFACT L0001849     HRDOW 1.0 1.0 1.0 1.0 1.0 1.0
EMISFACT L0001849     HRDOW 1.0 1.0 1.0 1.0 0.0 0.0
EMISFACT L0001849     HRDOW 0.0 0.0 0.0 0.0 0.0 0.0
EMISFACT L0001850     HRDOW 0.0 0.0 0.0 0.0 0.0 0.0
EMISFACT L0001850     HRDOW 1.0 1.0 1.0 1.0 1.0 1.0
EMISFACT L0001850     HRDOW 1.0 1.0 1.0 1.0 0.0 0.0
EMISFACT L0001850     HRDOW 0.0 0.0 0.0 0.0 0.0 0.0
EMISFACT L0001851     HRDOW 0.0 0.0 0.0 0.0 0.0 0.0
EMISFACT L0001851     HRDOW 1.0 1.0 1.0 1.0 1.0 1.0
EMISFACT L0001851     HRDOW 1.0 1.0 1.0 1.0 0.0 0.0
EMISFACT L0001851     HRDOW 0.0 0.0 0.0 0.0 0.0 0.0
EMISFACT L0001852     HRDOW 0.0 0.0 0.0 0.0 0.0 0.0
EMISFACT L0001852     HRDOW 1.0 1.0 1.0 1.0 1.0 1.0
EMISFACT L0001852     HRDOW 1.0 1.0 1.0 1.0 0.0 0.0
EMISFACT L0001852     HRDOW 0.0 0.0 0.0 0.0 0.0 0.0
EMISFACT L0001853     HRDOW 0.0 0.0 0.0 0.0 0.0 0.0
EMISFACT L0001853     HRDOW 1.0 1.0 1.0 1.0 1.0 1.0
EMISFACT L0001853     HRDOW 1.0 1.0 1.0 1.0 0.0 0.0
EMISFACT L0001853     HRDOW 0.0 0.0 0.0 0.0 0.0 0.0
EMISFACT L0001854     HRDOW 0.0 0.0 0.0 0.0 0.0 0.0
EMISFACT L0001854     HRDOW 1.0 1.0 1.0 1.0 1.0 1.0
EMISFACT L0001854     HRDOW 1.0 1.0 1.0 1.0 0.0 0.0
EMISFACT L0001854     HRDOW 0.0 0.0 0.0 0.0 0.0 0.0
EMISFACT L0001855     HRDOW 0.0 0.0 0.0 0.0 0.0 0.0
EMISFACT L0001855     HRDOW 1.0 1.0 1.0 1.0 1.0 1.0
EMISFACT L0001855     HRDOW 1.0 1.0 1.0 1.0 0.0 0.0
EMISFACT L0001855     HRDOW 0.0 0.0 0.0 0.0 0.0 0.0
EMISFACT L0001856     HRDOW 0.0 0.0 0.0 0.0 0.0 0.0
EMISFACT L0001856     HRDOW 1.0 1.0 1.0 1.0 1.0 1.0
EMISFACT L0001856     HRDOW 1.0 1.0 1.0 1.0 0.0 0.0
EMISFACT L0001856     HRDOW 0.0 0.0 0.0 0.0 0.0 0.0
EMISFACT L0001857     HRDOW 0.0 0.0 0.0 0.0 0.0 0.0
EMISFACT L0001857     HRDOW 1.0 1.0 1.0 1.0 1.0 1.0
EMISFACT L0001857     HRDOW 1.0 1.0 1.0 1.0 0.0 0.0
EMISFACT L0001857     HRDOW 0.0 0.0 0.0 0.0 0.0 0.0
EMISFACT L0001858     HRDOW 0.0 0.0 0.0 0.0 0.0 0.0
EMISFACT L0001858     HRDOW 1.0 1.0 1.0 1.0 1.0 1.0
EMISFACT L0001858     HRDOW 1.0 1.0 1.0 1.0 0.0 0.0
EMISFACT L0001858     HRDOW 0.0 0.0 0.0 0.0 0.0 0.0
EMISFACT L0001859     HRDOW 0.0 0.0 0.0 0.0 0.0 0.0
EMISFACT L0001859     HRDOW 1.0 1.0 1.0 1.0 1.0 1.0
EMISFACT L0001859     HRDOW 1.0 1.0 1.0 1.0 0.0 0.0
EMISFACT L0001859     HRDOW 0.0 0.0 0.0 0.0 0.0 0.0
EMISFACT L0001860     HRDOW 0.0 0.0 0.0 0.0 0.0 0.0
EMISFACT L0001860     HRDOW 1.0 1.0 1.0 1.0 1.0 1.0
EMISFACT L0001860     HRDOW 1.0 1.0 1.0 1.0 0.0 0.0
EMISFACT L0001860     HRDOW 0.0 0.0 0.0 0.0 0.0 0.0
EMISFACT L0001861     HRDOW 0.0 0.0 0.0 0.0 0.0 0.0
```

```
   EMISFACT L0001861     HRDOW 1.0 1.0 1.0 1.0 1.0 1.0
   EMISFACT L0001861     HRDOW 1.0 1.0 1.0 1.0 0.0 0.0
   EMISFACT L0001861     HRDOW 0.0 0.0 0.0 0.0 0.0 0.0
   EMISFACT L0001862     HRDOW 0.0 0.0 0.0 0.0 0.0 0.0
   EMISFACT L0001862     HRDOW 1.0 1.0 1.0 1.0 1.0 1.0
   EMISFACT L0001862     HRDOW 1.0 1.0 1.0 1.0 0.0 0.0
   EMISFACT L0001862     HRDOW 0.0 0.0 0.0 0.0 0.0 0.0
   EMISFACT L0001863     HRDOW 0.0 0.0 0.0 0.0 0.0 0.0
   EMISFACT L0001863     HRDOW 1.0 1.0 1.0 1.0 1.0 1.0
   EMISFACT L0001863     HRDOW 1.0 1.0 1.0 1.0 0.0 0.0
   EMISFACT L0001863     HRDOW 0.0 0.0 0.0 0.0 0.0 0.0
   EMISFACT L0001864     HRDOW 0.0 0.0 0.0 0.0 0.0 0.0
   EMISFACT L0001864     HRDOW 1.0 1.0 1.0 1.0 1.0 1.0
   EMISFACT L0001864     HRDOW 1.0 1.0 1.0 1.0 0.0 0.0
   EMISFACT L0001864     HRDOW 0.0 0.0 0.0 0.0 0.0 0.0
   EMISFACT L0001865     HRDOW 0.0 0.0 0.0 0.0 0.0 0.0
   EMISFACT L0001865     HRDOW 1.0 1.0 1.0 1.0 1.0 1.0
   EMISFACT L0001865     HRDOW 1.0 1.0 1.0 1.0 0.0 0.0
   EMISFACT L0001865     HRDOW 0.0 0.0 0.0 0.0 0.0 0.0
   EMISFACT L0001866     HRDOW 0.0 0.0 0.0 0.0 0.0 0.0
   EMISFACT L0001866     HRDOW 1.0 1.0 1.0 1.0 1.0 1.0
   EMISFACT L0001866     HRDOW 1.0 1.0 1.0 1.0 0.0 0.0
   EMISFACT L0001866     HRDOW 0.0 0.0 0.0 0.0 0.0 0.0
   EMISFACT L0001867     HRDOW 0.0 0.0 0.0 0.0 0.0 0.0
   EMISFACT L0001867     HRDOW 1.0 1.0 1.0 1.0 1.0 1.0
   EMISFACT L0001867     HRDOW 1.0 1.0 1.0 1.0 0.0 0.0
   EMISFACT L0001867     HRDOW 0.0 0.0 0.0 0.0 0.0 0.0
   EMISFACT L0001868     HRDOW 0.0 0.0 0.0 0.0 0.0 0.0
   EMISFACT L0001868     HRDOW 1.0 1.0 1.0 1.0 1.0 1.0
   EMISFACT L0001868     HRDOW 1.0 1.0 1.0 1.0 0.0 0.0
   EMISFACT L0001868     HRDOW 0.0 0.0 0.0 0.0 0.0 0.0
   EMISFACT L0001869     HRDOW 0.0 0.0 0.0 0.0 0.0 0.0
   EMISFACT L0001869     HRDOW 1.0 1.0 1.0 1.0 1.0 1.0
   EMISFACT L0001869     HRDOW 1.0 1.0 1.0 1.0 0.0 0.0
   EMISFACT L0001869     HRDOW 0.0 0.0 0.0 0.0 0.0 0.0
** Saturday:
   EMISFACT L0001845     HRDOW 0.0 0.0 0.0 0.0 0.0 0.0
   EMISFACT L0001845     HRDOW 0.0 0.0 0.0 0.0 0.0 0.0
   EMISFACT L0001845     HRDOW 0.0 0.0 0.0 0.0 0.0 0.0
   EMISFACT L0001845     HRDOW 0.0 0.0 0.0 0.0 0.0 0.0
   EMISFACT L0001846     HRDOW 0.0 0.0 0.0 0.0 0.0 0.0
   EMISFACT L0001846     HRDOW 0.0 0.0 0.0 0.0 0.0 0.0
   EMISFACT L0001846     HRDOW 0.0 0.0 0.0 0.0 0.0 0.0
   EMISFACT L0001846     HRDOW 0.0 0.0 0.0 0.0 0.0 0.0
   EMISFACT L0001847     HRDOW 0.0 0.0 0.0 0.0 0.0 0.0
   EMISFACT L0001847     HRDOW 0.0 0.0 0.0 0.0 0.0 0.0
   EMISFACT L0001847     HRDOW 0.0 0.0 0.0 0.0 0.0 0.0
   EMISFACT L0001847     HRDOW 0.0 0.0 0.0 0.0 0.0 0.0
   EMISFACT L0001848     HRDOW 0.0 0.0 0.0 0.0 0.0 0.0
   EMISFACT L0001848     HRDOW 0.0 0.0 0.0 0.0 0.0 0.0
   EMISFACT L0001848     HRDOW 0.0 0.0 0.0 0.0 0.0 0.0
   EMISFACT L0001848     HRDOW 0.0 0.0 0.0 0.0 0.0 0.0
   EMISFACT L0001849     HRDOW 0.0 0.0 0.0 0.0 0.0 0.0
   EMISFACT L0001849     HRDOW 0.0 0.0 0.0 0.0 0.0 0.0
   EMISFACT L0001849     HRDOW 0.0 0.0 0.0 0.0 0.0 0.0
   EMISFACT L0001849     HRDOW 0.0 0.0 0.0 0.0 0.0 0.0
   EMISFACT L0001850     HRDOW 0.0 0.0 0.0 0.0 0.0 0.0
   EMISFACT L0001850     HRDOW 0.0 0.0 0.0 0.0 0.0 0.0
   EMISFACT L0001850     HRDOW 0.0 0.0 0.0 0.0 0.0 0.0
```

```
EMISFACT L0001850     HRDOW 0.0 0.0 0.0 0.0 0.0 0.0
EMISFACT L0001851     HRDOW 0.0 0.0 0.0 0.0 0.0 0.0
EMISFACT L0001851     HRDOW 0.0 0.0 0.0 0.0 0.0 0.0
EMISFACT L0001851     HRDOW 0.0 0.0 0.0 0.0 0.0 0.0
EMISFACT L0001851     HRDOW 0.0 0.0 0.0 0.0 0.0 0.0
EMISFACT L0001852     HRDOW 0.0 0.0 0.0 0.0 0.0 0.0
EMISFACT L0001852     HRDOW 0.0 0.0 0.0 0.0 0.0 0.0
EMISFACT L0001852     HRDOW 0.0 0.0 0.0 0.0 0.0 0.0
EMISFACT L0001852     HRDOW 0.0 0.0 0.0 0.0 0.0 0.0
EMISFACT L0001853     HRDOW 0.0 0.0 0.0 0.0 0.0 0.0
EMISFACT L0001853     HRDOW 0.0 0.0 0.0 0.0 0.0 0.0
EMISFACT L0001853     HRDOW 0.0 0.0 0.0 0.0 0.0 0.0
EMISFACT L0001853     HRDOW 0.0 0.0 0.0 0.0 0.0 0.0
EMISFACT L0001854     HRDOW 0.0 0.0 0.0 0.0 0.0 0.0
EMISFACT L0001854     HRDOW 0.0 0.0 0.0 0.0 0.0 0.0
EMISFACT L0001854     HRDOW 0.0 0.0 0.0 0.0 0.0 0.0
EMISFACT L0001854     HRDOW 0.0 0.0 0.0 0.0 0.0 0.0
EMISFACT L0001855     HRDOW 0.0 0.0 0.0 0.0 0.0 0.0
EMISFACT L0001855     HRDOW 0.0 0.0 0.0 0.0 0.0 0.0
EMISFACT L0001855     HRDOW 0.0 0.0 0.0 0.0 0.0 0.0
EMISFACT L0001855     HRDOW 0.0 0.0 0.0 0.0 0.0 0.0
EMISFACT L0001856     HRDOW 0.0 0.0 0.0 0.0 0.0 0.0
EMISFACT L0001856     HRDOW 0.0 0.0 0.0 0.0 0.0 0.0
EMISFACT L0001856     HRDOW 0.0 0.0 0.0 0.0 0.0 0.0
EMISFACT L0001856     HRDOW 0.0 0.0 0.0 0.0 0.0 0.0
EMISFACT L0001857     HRDOW 0.0 0.0 0.0 0.0 0.0 0.0
EMISFACT L0001857     HRDOW 0.0 0.0 0.0 0.0 0.0 0.0
EMISFACT L0001857     HRDOW 0.0 0.0 0.0 0.0 0.0 0.0
EMISFACT L0001857     HRDOW 0.0 0.0 0.0 0.0 0.0 0.0
EMISFACT L0001858     HRDOW 0.0 0.0 0.0 0.0 0.0 0.0
EMISFACT L0001858     HRDOW 0.0 0.0 0.0 0.0 0.0 0.0
EMISFACT L0001858     HRDOW 0.0 0.0 0.0 0.0 0.0 0.0
EMISFACT L0001858     HRDOW 0.0 0.0 0.0 0.0 0.0 0.0
EMISFACT L0001859     HRDOW 0.0 0.0 0.0 0.0 0.0 0.0
EMISFACT L0001859     HRDOW 0.0 0.0 0.0 0.0 0.0 0.0
EMISFACT L0001859     HRDOW 0.0 0.0 0.0 0.0 0.0 0.0
EMISFACT L0001859     HRDOW 0.0 0.0 0.0 0.0 0.0 0.0
EMISFACT L0001860     HRDOW 0.0 0.0 0.0 0.0 0.0 0.0
EMISFACT L0001860     HRDOW 0.0 0.0 0.0 0.0 0.0 0.0
EMISFACT L0001860     HRDOW 0.0 0.0 0.0 0.0 0.0 0.0
EMISFACT L0001860     HRDOW 0.0 0.0 0.0 0.0 0.0 0.0
EMISFACT L0001861     HRDOW 0.0 0.0 0.0 0.0 0.0 0.0
EMISFACT L0001861     HRDOW 0.0 0.0 0.0 0.0 0.0 0.0
EMISFACT L0001861     HRDOW 0.0 0.0 0.0 0.0 0.0 0.0
EMISFACT L0001861     HRDOW 0.0 0.0 0.0 0.0 0.0 0.0
EMISFACT L0001862     HRDOW 0.0 0.0 0.0 0.0 0.0 0.0
EMISFACT L0001862     HRDOW 0.0 0.0 0.0 0.0 0.0 0.0
EMISFACT L0001862     HRDOW 0.0 0.0 0.0 0.0 0.0 0.0
EMISFACT L0001862     HRDOW 0.0 0.0 0.0 0.0 0.0 0.0
EMISFACT L0001863     HRDOW 0.0 0.0 0.0 0.0 0.0 0.0
EMISFACT L0001863     HRDOW 0.0 0.0 0.0 0.0 0.0 0.0
EMISFACT L0001863     HRDOW 0.0 0.0 0.0 0.0 0.0 0.0
EMISFACT L0001863     HRDOW 0.0 0.0 0.0 0.0 0.0 0.0
EMISFACT L0001864     HRDOW 0.0 0.0 0.0 0.0 0.0 0.0
EMISFACT L0001864     HRDOW 0.0 0.0 0.0 0.0 0.0 0.0
EMISFACT L0001864     HRDOW 0.0 0.0 0.0 0.0 0.0 0.0
EMISFACT L0001864     HRDOW 0.0 0.0 0.0 0.0 0.0 0.0
EMISFACT L0001865     HRDOW 0.0 0.0 0.0 0.0 0.0 0.0
EMISFACT L0001865     HRDOW 0.0 0.0 0.0 0.0 0.0 0.0
```

```
   EMISFACT L0001865     HRDOW 0.0 0.0 0.0 0.0 0.0 0.0
   EMISFACT L0001865     HRDOW 0.0 0.0 0.0 0.0 0.0 0.0
   EMISFACT L0001866     HRDOW 0.0 0.0 0.0 0.0 0.0 0.0
   EMISFACT L0001866     HRDOW 0.0 0.0 0.0 0.0 0.0 0.0
   EMISFACT L0001866     HRDOW 0.0 0.0 0.0 0.0 0.0 0.0
   EMISFACT L0001866     HRDOW 0.0 0.0 0.0 0.0 0.0 0.0
   EMISFACT L0001867     HRDOW 0.0 0.0 0.0 0.0 0.0 0.0
   EMISFACT L0001867     HRDOW 0.0 0.0 0.0 0.0 0.0 0.0
   EMISFACT L0001867     HRDOW 0.0 0.0 0.0 0.0 0.0 0.0
   EMISFACT L0001867     HRDOW 0.0 0.0 0.0 0.0 0.0 0.0
   EMISFACT L0001868     HRDOW 0.0 0.0 0.0 0.0 0.0 0.0
   EMISFACT L0001868     HRDOW 0.0 0.0 0.0 0.0 0.0 0.0
   EMISFACT L0001868     HRDOW 0.0 0.0 0.0 0.0 0.0 0.0
   EMISFACT L0001868     HRDOW 0.0 0.0 0.0 0.0 0.0 0.0
   EMISFACT L0001869     HRDOW 0.0 0.0 0.0 0.0 0.0 0.0
   EMISFACT L0001869     HRDOW 0.0 0.0 0.0 0.0 0.0 0.0
   EMISFACT L0001869     HRDOW 0.0 0.0 0.0 0.0 0.0 0.0
   EMISFACT L0001869     HRDOW 0.0 0.0 0.0 0.0 0.0 0.0
** Sunday:
   EMISFACT L0001845     HRDOW 0.0 0.0 0.0 0.0 0.0 0.0
   EMISFACT L0001845     HRDOW 0.0 0.0 0.0 0.0 0.0 0.0
   EMISFACT L0001845     HRDOW 0.0 0.0 0.0 0.0 0.0 0.0
   EMISFACT L0001845     HRDOW 0.0 0.0 0.0 0.0 0.0 0.0
   EMISFACT L0001846     HRDOW 0.0 0.0 0.0 0.0 0.0 0.0
   EMISFACT L0001846     HRDOW 0.0 0.0 0.0 0.0 0.0 0.0
   EMISFACT L0001846     HRDOW 0.0 0.0 0.0 0.0 0.0 0.0
   EMISFACT L0001846     HRDOW 0.0 0.0 0.0 0.0 0.0 0.0
   EMISFACT L0001847     HRDOW 0.0 0.0 0.0 0.0 0.0 0.0
   EMISFACT L0001847     HRDOW 0.0 0.0 0.0 0.0 0.0 0.0
   EMISFACT L0001847     HRDOW 0.0 0.0 0.0 0.0 0.0 0.0
   EMISFACT L0001847     HRDOW 0.0 0.0 0.0 0.0 0.0 0.0
   EMISFACT L0001848     HRDOW 0.0 0.0 0.0 0.0 0.0 0.0
   EMISFACT L0001848     HRDOW 0.0 0.0 0.0 0.0 0.0 0.0
   EMISFACT L0001848     HRDOW 0.0 0.0 0.0 0.0 0.0 0.0
   EMISFACT L0001848     HRDOW 0.0 0.0 0.0 0.0 0.0 0.0
   EMISFACT L0001849     HRDOW 0.0 0.0 0.0 0.0 0.0 0.0
   EMISFACT L0001849     HRDOW 0.0 0.0 0.0 0.0 0.0 0.0
   EMISFACT L0001849     HRDOW 0.0 0.0 0.0 0.0 0.0 0.0
   EMISFACT L0001849     HRDOW 0.0 0.0 0.0 0.0 0.0 0.0
   EMISFACT L0001850     HRDOW 0.0 0.0 0.0 0.0 0.0 0.0
   EMISFACT L0001850     HRDOW 0.0 0.0 0.0 0.0 0.0 0.0
   EMISFACT L0001850     HRDOW 0.0 0.0 0.0 0.0 0.0 0.0
   EMISFACT L0001850     HRDOW 0.0 0.0 0.0 0.0 0.0 0.0
   EMISFACT L0001851     HRDOW 0.0 0.0 0.0 0.0 0.0 0.0
   EMISFACT L0001851     HRDOW 0.0 0.0 0.0 0.0 0.0 0.0
   EMISFACT L0001851     HRDOW 0.0 0.0 0.0 0.0 0.0 0.0
   EMISFACT L0001851     HRDOW 0.0 0.0 0.0 0.0 0.0 0.0
   EMISFACT L0001852     HRDOW 0.0 0.0 0.0 0.0 0.0 0.0
   EMISFACT L0001852     HRDOW 0.0 0.0 0.0 0.0 0.0 0.0
   EMISFACT L0001852     HRDOW 0.0 0.0 0.0 0.0 0.0 0.0
   EMISFACT L0001852     HRDOW 0.0 0.0 0.0 0.0 0.0 0.0
   EMISFACT L0001853     HRDOW 0.0 0.0 0.0 0.0 0.0 0.0
   EMISFACT L0001853     HRDOW 0.0 0.0 0.0 0.0 0.0 0.0
   EMISFACT L0001853     HRDOW 0.0 0.0 0.0 0.0 0.0 0.0
   EMISFACT L0001853     HRDOW 0.0 0.0 0.0 0.0 0.0 0.0
   EMISFACT L0001854     HRDOW 0.0 0.0 0.0 0.0 0.0 0.0
   EMISFACT L0001854     HRDOW 0.0 0.0 0.0 0.0 0.0 0.0
   EMISFACT L0001854     HRDOW 0.0 0.0 0.0 0.0 0.0 0.0
   EMISFACT L0001854     HRDOW 0.0 0.0 0.0 0.0 0.0 0.0
```

```
EMISFACT L0001855     HRDOW 0.0 0.0 0.0 0.0 0.0 0.0
EMISFACT L0001855     HRDOW 0.0 0.0 0.0 0.0 0.0 0.0
EMISFACT L0001855     HRDOW 0.0 0.0 0.0 0.0 0.0 0.0
EMISFACT L0001855     HRDOW 0.0 0.0 0.0 0.0 0.0 0.0
EMISFACT L0001856     HRDOW 0.0 0.0 0.0 0.0 0.0 0.0
EMISFACT L0001856     HRDOW 0.0 0.0 0.0 0.0 0.0 0.0
EMISFACT L0001856     HRDOW 0.0 0.0 0.0 0.0 0.0 0.0
EMISFACT L0001856     HRDOW 0.0 0.0 0.0 0.0 0.0 0.0
EMISFACT L0001857     HRDOW 0.0 0.0 0.0 0.0 0.0 0.0
EMISFACT L0001857     HRDOW 0.0 0.0 0.0 0.0 0.0 0.0
EMISFACT L0001857     HRDOW 0.0 0.0 0.0 0.0 0.0 0.0
EMISFACT L0001857     HRDOW 0.0 0.0 0.0 0.0 0.0 0.0
EMISFACT L0001858     HRDOW 0.0 0.0 0.0 0.0 0.0 0.0
EMISFACT L0001858     HRDOW 0.0 0.0 0.0 0.0 0.0 0.0
EMISFACT L0001858     HRDOW 0.0 0.0 0.0 0.0 0.0 0.0
EMISFACT L0001858     HRDOW 0.0 0.0 0.0 0.0 0.0 0.0
EMISFACT L0001859     HRDOW 0.0 0.0 0.0 0.0 0.0 0.0
EMISFACT L0001859     HRDOW 0.0 0.0 0.0 0.0 0.0 0.0
EMISFACT L0001859     HRDOW 0.0 0.0 0.0 0.0 0.0 0.0
EMISFACT L0001859     HRDOW 0.0 0.0 0.0 0.0 0.0 0.0
EMISFACT L0001860     HRDOW 0.0 0.0 0.0 0.0 0.0 0.0
EMISFACT L0001860     HRDOW 0.0 0.0 0.0 0.0 0.0 0.0
EMISFACT L0001860     HRDOW 0.0 0.0 0.0 0.0 0.0 0.0
EMISFACT L0001860     HRDOW 0.0 0.0 0.0 0.0 0.0 0.0
EMISFACT L0001861     HRDOW 0.0 0.0 0.0 0.0 0.0 0.0
EMISFACT L0001861     HRDOW 0.0 0.0 0.0 0.0 0.0 0.0
EMISFACT L0001861     HRDOW 0.0 0.0 0.0 0.0 0.0 0.0
EMISFACT L0001861     HRDOW 0.0 0.0 0.0 0.0 0.0 0.0
EMISFACT L0001862     HRDOW 0.0 0.0 0.0 0.0 0.0 0.0
EMISFACT L0001862     HRDOW 0.0 0.0 0.0 0.0 0.0 0.0
EMISFACT L0001862     HRDOW 0.0 0.0 0.0 0.0 0.0 0.0
EMISFACT L0001862     HRDOW 0.0 0.0 0.0 0.0 0.0 0.0
EMISFACT L0001863     HRDOW 0.0 0.0 0.0 0.0 0.0 0.0
EMISFACT L0001863     HRDOW 0.0 0.0 0.0 0.0 0.0 0.0
EMISFACT L0001863     HRDOW 0.0 0.0 0.0 0.0 0.0 0.0
EMISFACT L0001863     HRDOW 0.0 0.0 0.0 0.0 0.0 0.0
EMISFACT L0001864     HRDOW 0.0 0.0 0.0 0.0 0.0 0.0
EMISFACT L0001864     HRDOW 0.0 0.0 0.0 0.0 0.0 0.0
EMISFACT L0001864     HRDOW 0.0 0.0 0.0 0.0 0.0 0.0
EMISFACT L0001864     HRDOW 0.0 0.0 0.0 0.0 0.0 0.0
EMISFACT L0001865     HRDOW 0.0 0.0 0.0 0.0 0.0 0.0
EMISFACT L0001865     HRDOW 0.0 0.0 0.0 0.0 0.0 0.0
EMISFACT L0001865     HRDOW 0.0 0.0 0.0 0.0 0.0 0.0
EMISFACT L0001865     HRDOW 0.0 0.0 0.0 0.0 0.0 0.0
EMISFACT L0001866     HRDOW 0.0 0.0 0.0 0.0 0.0 0.0
EMISFACT L0001866     HRDOW 0.0 0.0 0.0 0.0 0.0 0.0
EMISFACT L0001866     HRDOW 0.0 0.0 0.0 0.0 0.0 0.0
EMISFACT L0001866     HRDOW 0.0 0.0 0.0 0.0 0.0 0.0
EMISFACT L0001867     HRDOW 0.0 0.0 0.0 0.0 0.0 0.0
EMISFACT L0001867     HRDOW 0.0 0.0 0.0 0.0 0.0 0.0
EMISFACT L0001867     HRDOW 0.0 0.0 0.0 0.0 0.0 0.0
EMISFACT L0001867     HRDOW 0.0 0.0 0.0 0.0 0.0 0.0
EMISFACT L0001868     HRDOW 0.0 0.0 0.0 0.0 0.0 0.0
EMISFACT L0001868     HRDOW 0.0 0.0 0.0 0.0 0.0 0.0
EMISFACT L0001868     HRDOW 0.0 0.0 0.0 0.0 0.0 0.0
EMISFACT L0001868     HRDOW 0.0 0.0 0.0 0.0 0.0 0.0
EMISFACT L0001869     HRDOW 0.0 0.0 0.0 0.0 0.0 0.0
EMISFACT L0001869     HRDOW 0.0 0.0 0.0 0.0 0.0 0.0
EMISFACT L0001869     HRDOW 0.0 0.0 0.0 0.0 0.0 0.0
```

```
   EMISFACT L0001869     HRDOW 0.0 0.0 0.0 0.0 0.0 0.0
** WeekDays:
   EMISFACT L0001870     HRDOW 0.0 0.0 0.0 0.0 0.0 0.0
   EMISFACT L0001870     HRDOW 1.0 1.0 1.0 1.0 1.0 1.0
   EMISFACT L0001870     HRDOW 1.0 1.0 1.0 1.0 0.0 0.0
   EMISFACT L0001870     HRDOW 0.0 0.0 0.0 0.0 0.0 0.0
   EMISFACT L0001871     HRDOW 0.0 0.0 0.0 0.0 0.0 0.0
   EMISFACT L0001871     HRDOW 1.0 1.0 1.0 1.0 1.0 1.0
   EMISFACT L0001871     HRDOW 1.0 1.0 1.0 1.0 0.0 0.0
   EMISFACT L0001871     HRDOW 0.0 0.0 0.0 0.0 0.0 0.0
   EMISFACT L0001872     HRDOW 0.0 0.0 0.0 0.0 0.0 0.0
   EMISFACT L0001872     HRDOW 1.0 1.0 1.0 1.0 1.0 1.0
   EMISFACT L0001872     HRDOW 1.0 1.0 1.0 1.0 0.0 0.0
   EMISFACT L0001872     HRDOW 0.0 0.0 0.0 0.0 0.0 0.0
   EMISFACT L0001873     HRDOW 0.0 0.0 0.0 0.0 0.0 0.0
   EMISFACT L0001873     HRDOW 1.0 1.0 1.0 1.0 1.0 1.0
   EMISFACT L0001873     HRDOW 1.0 1.0 1.0 1.0 0.0 0.0
   EMISFACT L0001873     HRDOW 0.0 0.0 0.0 0.0 0.0 0.0
   EMISFACT L0001874     HRDOW 0.0 0.0 0.0 0.0 0.0 0.0
   EMISFACT L0001874     HRDOW 1.0 1.0 1.0 1.0 1.0 1.0
   EMISFACT L0001874     HRDOW 1.0 1.0 1.0 1.0 0.0 0.0
   EMISFACT L0001874     HRDOW 0.0 0.0 0.0 0.0 0.0 0.0
   EMISFACT L0001875     HRDOW 0.0 0.0 0.0 0.0 0.0 0.0
   EMISFACT L0001875     HRDOW 1.0 1.0 1.0 1.0 1.0 1.0
   EMISFACT L0001875     HRDOW 1.0 1.0 1.0 1.0 0.0 0.0
   EMISFACT L0001875     HRDOW 0.0 0.0 0.0 0.0 0.0 0.0
   EMISFACT L0001876     HRDOW 0.0 0.0 0.0 0.0 0.0 0.0
   EMISFACT L0001876     HRDOW 1.0 1.0 1.0 1.0 1.0 1.0
   EMISFACT L0001876     HRDOW 1.0 1.0 1.0 1.0 0.0 0.0
   EMISFACT L0001876     HRDOW 0.0 0.0 0.0 0.0 0.0 0.0
   EMISFACT L0001877     HRDOW 0.0 0.0 0.0 0.0 0.0 0.0
   EMISFACT L0001877     HRDOW 1.0 1.0 1.0 1.0 1.0 1.0
   EMISFACT L0001877     HRDOW 1.0 1.0 1.0 1.0 0.0 0.0
   EMISFACT L0001877     HRDOW 0.0 0.0 0.0 0.0 0.0 0.0
   EMISFACT L0001878     HRDOW 0.0 0.0 0.0 0.0 0.0 0.0
   EMISFACT L0001878     HRDOW 1.0 1.0 1.0 1.0 1.0 1.0
   EMISFACT L0001878     HRDOW 1.0 1.0 1.0 1.0 0.0 0.0
   EMISFACT L0001878     HRDOW 0.0 0.0 0.0 0.0 0.0 0.0
   EMISFACT L0001879     HRDOW 0.0 0.0 0.0 0.0 0.0 0.0
   EMISFACT L0001879     HRDOW 1.0 1.0 1.0 1.0 1.0 1.0
   EMISFACT L0001879     HRDOW 1.0 1.0 1.0 1.0 0.0 0.0
   EMISFACT L0001879     HRDOW 0.0 0.0 0.0 0.0 0.0 0.0
   EMISFACT L0001880     HRDOW 0.0 0.0 0.0 0.0 0.0 0.0
   EMISFACT L0001880     HRDOW 1.0 1.0 1.0 1.0 1.0 1.0
   EMISFACT L0001880     HRDOW 1.0 1.0 1.0 1.0 0.0 0.0
   EMISFACT L0001880     HRDOW 0.0 0.0 0.0 0.0 0.0 0.0
   EMISFACT L0001881     HRDOW 0.0 0.0 0.0 0.0 0.0 0.0
   EMISFACT L0001881     HRDOW 1.0 1.0 1.0 1.0 1.0 1.0
   EMISFACT L0001881     HRDOW 1.0 1.0 1.0 1.0 0.0 0.0
   EMISFACT L0001881     HRDOW 0.0 0.0 0.0 0.0 0.0 0.0
   EMISFACT L0001882     HRDOW 0.0 0.0 0.0 0.0 0.0 0.0
   EMISFACT L0001882     HRDOW 1.0 1.0 1.0 1.0 1.0 1.0
   EMISFACT L0001882     HRDOW 1.0 1.0 1.0 1.0 0.0 0.0
   EMISFACT L0001882     HRDOW 0.0 0.0 0.0 0.0 0.0 0.0
   EMISFACT L0001883     HRDOW 0.0 0.0 0.0 0.0 0.0 0.0
   EMISFACT L0001883     HRDOW 1.0 1.0 1.0 1.0 1.0 1.0
   EMISFACT L0001883     HRDOW 1.0 1.0 1.0 1.0 0.0 0.0
   EMISFACT L0001883     HRDOW 0.0 0.0 0.0 0.0 0.0 0.0
   EMISFACT L0001884     HRDOW 0.0 0.0 0.0 0.0 0.0 0.0
```

```
EMISFACT L0001884     HRDOW 1.0 1.0 1.0 1.0 1.0 1.0
EMISFACT L0001884     HRDOW 1.0 1.0 1.0 1.0 0.0 0.0
EMISFACT L0001884     HRDOW 0.0 0.0 0.0 0.0 0.0 0.0
EMISFACT L0001885     HRDOW 0.0 0.0 0.0 0.0 0.0 0.0
EMISFACT L0001885     HRDOW 1.0 1.0 1.0 1.0 1.0 1.0
EMISFACT L0001885     HRDOW 1.0 1.0 1.0 1.0 0.0 0.0
EMISFACT L0001885     HRDOW 0.0 0.0 0.0 0.0 0.0 0.0
EMISFACT L0001886     HRDOW 0.0 0.0 0.0 0.0 0.0 0.0
EMISFACT L0001886     HRDOW 1.0 1.0 1.0 1.0 1.0 1.0
EMISFACT L0001886     HRDOW 1.0 1.0 1.0 1.0 0.0 0.0
EMISFACT L0001886     HRDOW 0.0 0.0 0.0 0.0 0.0 0.0
EMISFACT L0001887     HRDOW 0.0 0.0 0.0 0.0 0.0 0.0
EMISFACT L0001887     HRDOW 1.0 1.0 1.0 1.0 1.0 1.0
EMISFACT L0001887     HRDOW 1.0 1.0 1.0 1.0 0.0 0.0
EMISFACT L0001887     HRDOW 0.0 0.0 0.0 0.0 0.0 0.0
EMISFACT L0001888     HRDOW 0.0 0.0 0.0 0.0 0.0 0.0
EMISFACT L0001888     HRDOW 1.0 1.0 1.0 1.0 1.0 1.0
EMISFACT L0001888     HRDOW 1.0 1.0 1.0 1.0 0.0 0.0
EMISFACT L0001888     HRDOW 0.0 0.0 0.0 0.0 0.0 0.0
EMISFACT L0001889     HRDOW 0.0 0.0 0.0 0.0 0.0 0.0
EMISFACT L0001889     HRDOW 1.0 1.0 1.0 1.0 1.0 1.0
EMISFACT L0001889     HRDOW 1.0 1.0 1.0 1.0 0.0 0.0
EMISFACT L0001889     HRDOW 0.0 0.0 0.0 0.0 0.0 0.0
EMISFACT L0001890     HRDOW 0.0 0.0 0.0 0.0 0.0 0.0
EMISFACT L0001890     HRDOW 1.0 1.0 1.0 1.0 1.0 1.0
EMISFACT L0001890     HRDOW 1.0 1.0 1.0 1.0 0.0 0.0
EMISFACT L0001890     HRDOW 0.0 0.0 0.0 0.0 0.0 0.0
EMISFACT L0001891     HRDOW 0.0 0.0 0.0 0.0 0.0 0.0
EMISFACT L0001891     HRDOW 1.0 1.0 1.0 1.0 1.0 1.0
EMISFACT L0001891     HRDOW 1.0 1.0 1.0 1.0 0.0 0.0
EMISFACT L0001891     HRDOW 0.0 0.0 0.0 0.0 0.0 0.0
EMISFACT L0001892     HRDOW 0.0 0.0 0.0 0.0 0.0 0.0
EMISFACT L0001892     HRDOW 1.0 1.0 1.0 1.0 1.0 1.0
EMISFACT L0001892     HRDOW 1.0 1.0 1.0 1.0 0.0 0.0
EMISFACT L0001892     HRDOW 0.0 0.0 0.0 0.0 0.0 0.0
EMISFACT L0001893     HRDOW 0.0 0.0 0.0 0.0 0.0 0.0
EMISFACT L0001893     HRDOW 1.0 1.0 1.0 1.0 1.0 1.0
EMISFACT L0001893     HRDOW 1.0 1.0 1.0 1.0 0.0 0.0
EMISFACT L0001893     HRDOW 0.0 0.0 0.0 0.0 0.0 0.0
EMISFACT L0001894     HRDOW 0.0 0.0 0.0 0.0 0.0 0.0
EMISFACT L0001894     HRDOW 1.0 1.0 1.0 1.0 1.0 1.0
EMISFACT L0001894     HRDOW 1.0 1.0 1.0 1.0 0.0 0.0
EMISFACT L0001894     HRDOW 0.0 0.0 0.0 0.0 0.0 0.0
EMISFACT L0001895     HRDOW 0.0 0.0 0.0 0.0 0.0 0.0
EMISFACT L0001895     HRDOW 1.0 1.0 1.0 1.0 1.0 1.0
EMISFACT L0001895     HRDOW 1.0 1.0 1.0 1.0 0.0 0.0
EMISFACT L0001895     HRDOW 0.0 0.0 0.0 0.0 0.0 0.0
EMISFACT L0001896     HRDOW 0.0 0.0 0.0 0.0 0.0 0.0
EMISFACT L0001896     HRDOW 1.0 1.0 1.0 1.0 1.0 1.0
EMISFACT L0001896     HRDOW 1.0 1.0 1.0 1.0 0.0 0.0
EMISFACT L0001896     HRDOW 0.0 0.0 0.0 0.0 0.0 0.0
EMISFACT L0001897     HRDOW 0.0 0.0 0.0 0.0 0.0 0.0
EMISFACT L0001897     HRDOW 1.0 1.0 1.0 1.0 1.0 1.0
EMISFACT L0001897     HRDOW 1.0 1.0 1.0 1.0 0.0 0.0
EMISFACT L0001897     HRDOW 0.0 0.0 0.0 0.0 0.0 0.0
EMISFACT L0001898     HRDOW 0.0 0.0 0.0 0.0 0.0 0.0
EMISFACT L0001898     HRDOW 1.0 1.0 1.0 1.0 1.0 1.0
EMISFACT L0001898     HRDOW 1.0 1.0 1.0 1.0 0.0 0.0
EMISFACT L0001898     HRDOW 0.0 0.0 0.0 0.0 0.0 0.0
```

```
EMISFACT L0001899     HRDOW 0.0 0.0 0.0 0.0 0.0 0.0
EMISFACT L0001899     HRDOW 1.0 1.0 1.0 1.0 1.0 1.0
EMISFACT L0001899     HRDOW 1.0 1.0 1.0 1.0 0.0 0.0
EMISFACT L0001899     HRDOW 0.0 0.0 0.0 0.0 0.0 0.0
EMISFACT L0001900     HRDOW 0.0 0.0 0.0 0.0 0.0 0.0
EMISFACT L0001900     HRDOW 1.0 1.0 1.0 1.0 1.0 1.0
EMISFACT L0001900     HRDOW 1.0 1.0 1.0 1.0 0.0 0.0
EMISFACT L0001900     HRDOW 0.0 0.0 0.0 0.0 0.0 0.0
EMISFACT L0001901     HRDOW 0.0 0.0 0.0 0.0 0.0 0.0
EMISFACT L0001901     HRDOW 1.0 1.0 1.0 1.0 1.0 1.0
EMISFACT L0001901     HRDOW 1.0 1.0 1.0 1.0 0.0 0.0
EMISFACT L0001901     HRDOW 0.0 0.0 0.0 0.0 0.0 0.0
EMISFACT L0001902     HRDOW 0.0 0.0 0.0 0.0 0.0 0.0
EMISFACT L0001902     HRDOW 1.0 1.0 1.0 1.0 1.0 1.0
EMISFACT L0001902     HRDOW 1.0 1.0 1.0 1.0 0.0 0.0
EMISFACT L0001902     HRDOW 0.0 0.0 0.0 0.0 0.0 0.0
EMISFACT L0001903     HRDOW 0.0 0.0 0.0 0.0 0.0 0.0
EMISFACT L0001903     HRDOW 1.0 1.0 1.0 1.0 1.0 1.0
EMISFACT L0001903     HRDOW 1.0 1.0 1.0 1.0 0.0 0.0
EMISFACT L0001903     HRDOW 0.0 0.0 0.0 0.0 0.0 0.0
EMISFACT L0001904     HRDOW 0.0 0.0 0.0 0.0 0.0 0.0
EMISFACT L0001904     HRDOW 1.0 1.0 1.0 1.0 1.0 1.0
EMISFACT L0001904     HRDOW 1.0 1.0 1.0 1.0 0.0 0.0
EMISFACT L0001904     HRDOW 0.0 0.0 0.0 0.0 0.0 0.0
EMISFACT L0001905     HRDOW 0.0 0.0 0.0 0.0 0.0 0.0
EMISFACT L0001905     HRDOW 1.0 1.0 1.0 1.0 1.0 1.0
EMISFACT L0001905     HRDOW 1.0 1.0 1.0 1.0 0.0 0.0
EMISFACT L0001905     HRDOW 0.0 0.0 0.0 0.0 0.0 0.0
EMISFACT L0001906     HRDOW 0.0 0.0 0.0 0.0 0.0 0.0
EMISFACT L0001906     HRDOW 1.0 1.0 1.0 1.0 1.0 1.0
EMISFACT L0001906     HRDOW 1.0 1.0 1.0 1.0 0.0 0.0
EMISFACT L0001906     HRDOW 0.0 0.0 0.0 0.0 0.0 0.0
EMISFACT L0001907     HRDOW 0.0 0.0 0.0 0.0 0.0 0.0
EMISFACT L0001907     HRDOW 1.0 1.0 1.0 1.0 1.0 1.0
EMISFACT L0001907     HRDOW 1.0 1.0 1.0 1.0 0.0 0.0
EMISFACT L0001907     HRDOW 0.0 0.0 0.0 0.0 0.0 0.0
EMISFACT L0001908     HRDOW 0.0 0.0 0.0 0.0 0.0 0.0
EMISFACT L0001908     HRDOW 1.0 1.0 1.0 1.0 1.0 1.0
EMISFACT L0001908     HRDOW 1.0 1.0 1.0 1.0 0.0 0.0
EMISFACT L0001908     HRDOW 0.0 0.0 0.0 0.0 0.0 0.0
EMISFACT L0001909     HRDOW 0.0 0.0 0.0 0.0 0.0 0.0
EMISFACT L0001909     HRDOW 1.0 1.0 1.0 1.0 1.0 1.0
EMISFACT L0001909     HRDOW 1.0 1.0 1.0 1.0 0.0 0.0
EMISFACT L0001909     HRDOW 0.0 0.0 0.0 0.0 0.0 0.0
EMISFACT L0001910     HRDOW 0.0 0.0 0.0 0.0 0.0 0.0
EMISFACT L0001910     HRDOW 1.0 1.0 1.0 1.0 1.0 1.0
EMISFACT L0001910     HRDOW 1.0 1.0 1.0 1.0 0.0 0.0
EMISFACT L0001910     HRDOW 0.0 0.0 0.0 0.0 0.0 0.0
EMISFACT L0001911     HRDOW 0.0 0.0 0.0 0.0 0.0 0.0
EMISFACT L0001911     HRDOW 1.0 1.0 1.0 1.0 1.0 1.0
EMISFACT L0001911     HRDOW 1.0 1.0 1.0 1.0 0.0 0.0
EMISFACT L0001911     HRDOW 0.0 0.0 0.0 0.0 0.0 0.0
EMISFACT L0001912     HRDOW 0.0 0.0 0.0 0.0 0.0 0.0
EMISFACT L0001912     HRDOW 1.0 1.0 1.0 1.0 1.0 1.0
EMISFACT L0001912     HRDOW 1.0 1.0 1.0 1.0 0.0 0.0
EMISFACT L0001912     HRDOW 0.0 0.0 0.0 0.0 0.0 0.0
EMISFACT L0001913     HRDOW 0.0 0.0 0.0 0.0 0.0 0.0
EMISFACT L0001913     HRDOW 1.0 1.0 1.0 1.0 1.0 1.0
EMISFACT L0001913     HRDOW 1.0 1.0 1.0 1.0 0.0 0.0
```

```
EMISFACT L0001913     HRDOW 0.0 0.0 0.0 0.0 0.0 0.0
EMISFACT L0001914     HRDOW 0.0 0.0 0.0 0.0 0.0 0.0
EMISFACT L0001914     HRDOW 1.0 1.0 1.0 1.0 1.0 1.0
EMISFACT L0001914     HRDOW 1.0 1.0 1.0 1.0 0.0 0.0
EMISFACT L0001914     HRDOW 0.0 0.0 0.0 0.0 0.0 0.0
EMISFACT L0001915     HRDOW 0.0 0.0 0.0 0.0 0.0 0.0
EMISFACT L0001915     HRDOW 1.0 1.0 1.0 1.0 1.0 1.0
EMISFACT L0001915     HRDOW 1.0 1.0 1.0 1.0 0.0 0.0
EMISFACT L0001915     HRDOW 0.0 0.0 0.0 0.0 0.0 0.0
EMISFACT L0001916     HRDOW 0.0 0.0 0.0 0.0 0.0 0.0
EMISFACT L0001916     HRDOW 1.0 1.0 1.0 1.0 1.0 1.0
EMISFACT L0001916     HRDOW 1.0 1.0 1.0 1.0 0.0 0.0
EMISFACT L0001916     HRDOW 0.0 0.0 0.0 0.0 0.0 0.0
EMISFACT L0001917     HRDOW 0.0 0.0 0.0 0.0 0.0 0.0
EMISFACT L0001917     HRDOW 1.0 1.0 1.0 1.0 1.0 1.0
EMISFACT L0001917     HRDOW 1.0 1.0 1.0 1.0 0.0 0.0
EMISFACT L0001917     HRDOW 0.0 0.0 0.0 0.0 0.0 0.0
EMISFACT L0001918     HRDOW 0.0 0.0 0.0 0.0 0.0 0.0
EMISFACT L0001918     HRDOW 1.0 1.0 1.0 1.0 1.0 1.0
EMISFACT L0001918     HRDOW 1.0 1.0 1.0 1.0 0.0 0.0
EMISFACT L0001918     HRDOW 0.0 0.0 0.0 0.0 0.0 0.0
EMISFACT L0001919     HRDOW 0.0 0.0 0.0 0.0 0.0 0.0
EMISFACT L0001919     HRDOW 1.0 1.0 1.0 1.0 1.0 1.0
EMISFACT L0001919     HRDOW 1.0 1.0 1.0 1.0 0.0 0.0
EMISFACT L0001919     HRDOW 0.0 0.0 0.0 0.0 0.0 0.0
EMISFACT L0001920     HRDOW 0.0 0.0 0.0 0.0 0.0 0.0
EMISFACT L0001920     HRDOW 1.0 1.0 1.0 1.0 1.0 1.0
EMISFACT L0001920     HRDOW 1.0 1.0 1.0 1.0 0.0 0.0
EMISFACT L0001920     HRDOW 0.0 0.0 0.0 0.0 0.0 0.0
EMISFACT L0001921     HRDOW 0.0 0.0 0.0 0.0 0.0 0.0
EMISFACT L0001921     HRDOW 1.0 1.0 1.0 1.0 1.0 1.0
EMISFACT L0001921     HRDOW 1.0 1.0 1.0 1.0 0.0 0.0
EMISFACT L0001921     HRDOW 0.0 0.0 0.0 0.0 0.0 0.0
EMISFACT L0001922     HRDOW 0.0 0.0 0.0 0.0 0.0 0.0
EMISFACT L0001922     HRDOW 1.0 1.0 1.0 1.0 1.0 1.0
EMISFACT L0001922     HRDOW 1.0 1.0 1.0 1.0 0.0 0.0
EMISFACT L0001922     HRDOW 0.0 0.0 0.0 0.0 0.0 0.0
EMISFACT L0001923     HRDOW 0.0 0.0 0.0 0.0 0.0 0.0
EMISFACT L0001923     HRDOW 1.0 1.0 1.0 1.0 1.0 1.0
EMISFACT L0001923     HRDOW 1.0 1.0 1.0 1.0 0.0 0.0
EMISFACT L0001923     HRDOW 0.0 0.0 0.0 0.0 0.0 0.0
EMISFACT L0001924     HRDOW 0.0 0.0 0.0 0.0 0.0 0.0
EMISFACT L0001924     HRDOW 1.0 1.0 1.0 1.0 1.0 1.0
EMISFACT L0001924     HRDOW 1.0 1.0 1.0 1.0 0.0 0.0
EMISFACT L0001924     HRDOW 0.0 0.0 0.0 0.0 0.0 0.0
EMISFACT L0001925     HRDOW 0.0 0.0 0.0 0.0 0.0 0.0
EMISFACT L0001925     HRDOW 1.0 1.0 1.0 1.0 1.0 1.0
EMISFACT L0001925     HRDOW 1.0 1.0 1.0 1.0 0.0 0.0
EMISFACT L0001925     HRDOW 0.0 0.0 0.0 0.0 0.0 0.0
EMISFACT L0001926     HRDOW 0.0 0.0 0.0 0.0 0.0 0.0
EMISFACT L0001926     HRDOW 1.0 1.0 1.0 1.0 1.0 1.0
EMISFACT L0001926     HRDOW 1.0 1.0 1.0 1.0 0.0 0.0
EMISFACT L0001926     HRDOW 0.0 0.0 0.0 0.0 0.0 0.0
EMISFACT L0001927     HRDOW 0.0 0.0 0.0 0.0 0.0 0.0
EMISFACT L0001927     HRDOW 1.0 1.0 1.0 1.0 1.0 1.0
EMISFACT L0001927     HRDOW 1.0 1.0 1.0 1.0 0.0 0.0
EMISFACT L0001927     HRDOW 0.0 0.0 0.0 0.0 0.0 0.0
EMISFACT L0001928     HRDOW 0.0 0.0 0.0 0.0 0.0 0.0
EMISFACT L0001928     HRDOW 1.0 1.0 1.0 1.0 1.0 1.0
```

```
EMISFACT L0001928     HRDOW 1.0 1.0 1.0 1.0 0.0 0.0
EMISFACT L0001928     HRDOW 0.0 0.0 0.0 0.0 0.0 0.0
EMISFACT L0001929     HRDOW 0.0 0.0 0.0 0.0 0.0 0.0
EMISFACT L0001929     HRDOW 1.0 1.0 1.0 1.0 1.0 1.0
EMISFACT L0001929     HRDOW 1.0 1.0 1.0 1.0 0.0 0.0
EMISFACT L0001929     HRDOW 0.0 0.0 0.0 0.0 0.0 0.0
EMISFACT L0001930     HRDOW 0.0 0.0 0.0 0.0 0.0 0.0
EMISFACT L0001930     HRDOW 1.0 1.0 1.0 1.0 1.0 1.0
EMISFACT L0001930     HRDOW 1.0 1.0 1.0 1.0 0.0 0.0
EMISFACT L0001930     HRDOW 0.0 0.0 0.0 0.0 0.0 0.0
EMISFACT L0001931     HRDOW 0.0 0.0 0.0 0.0 0.0 0.0
EMISFACT L0001931     HRDOW 1.0 1.0 1.0 1.0 1.0 1.0
EMISFACT L0001931     HRDOW 1.0 1.0 1.0 1.0 0.0 0.0
EMISFACT L0001931     HRDOW 0.0 0.0 0.0 0.0 0.0 0.0
EMISFACT L0001932     HRDOW 0.0 0.0 0.0 0.0 0.0 0.0
EMISFACT L0001932     HRDOW 1.0 1.0 1.0 1.0 1.0 1.0
EMISFACT L0001932     HRDOW 1.0 1.0 1.0 1.0 0.0 0.0
EMISFACT L0001932     HRDOW 0.0 0.0 0.0 0.0 0.0 0.0
EMISFACT L0001933     HRDOW 0.0 0.0 0.0 0.0 0.0 0.0
EMISFACT L0001933     HRDOW 1.0 1.0 1.0 1.0 1.0 1.0
EMISFACT L0001933     HRDOW 1.0 1.0 1.0 1.0 0.0 0.0
EMISFACT L0001933     HRDOW 0.0 0.0 0.0 0.0 0.0 0.0
EMISFACT L0001934     HRDOW 0.0 0.0 0.0 0.0 0.0 0.0
EMISFACT L0001934     HRDOW 1.0 1.0 1.0 1.0 1.0 1.0
EMISFACT L0001934     HRDOW 1.0 1.0 1.0 1.0 0.0 0.0
EMISFACT L0001934     HRDOW 0.0 0.0 0.0 0.0 0.0 0.0
EMISFACT L0001935     HRDOW 0.0 0.0 0.0 0.0 0.0 0.0
EMISFACT L0001935     HRDOW 1.0 1.0 1.0 1.0 1.0 1.0
EMISFACT L0001935     HRDOW 1.0 1.0 1.0 1.0 0.0 0.0
EMISFACT L0001935     HRDOW 0.0 0.0 0.0 0.0 0.0 0.0
EMISFACT L0001936     HRDOW 0.0 0.0 0.0 0.0 0.0 0.0
EMISFACT L0001936     HRDOW 1.0 1.0 1.0 1.0 1.0 1.0
EMISFACT L0001936     HRDOW 1.0 1.0 1.0 1.0 0.0 0.0
EMISFACT L0001936     HRDOW 0.0 0.0 0.0 0.0 0.0 0.0
EMISFACT L0001937     HRDOW 0.0 0.0 0.0 0.0 0.0 0.0
EMISFACT L0001937     HRDOW 1.0 1.0 1.0 1.0 1.0 1.0
EMISFACT L0001937     HRDOW 1.0 1.0 1.0 1.0 0.0 0.0
EMISFACT L0001937     HRDOW 0.0 0.0 0.0 0.0 0.0 0.0
EMISFACT L0001938     HRDOW 0.0 0.0 0.0 0.0 0.0 0.0
EMISFACT L0001938     HRDOW 1.0 1.0 1.0 1.0 1.0 1.0
EMISFACT L0001938     HRDOW 1.0 1.0 1.0 1.0 0.0 0.0
EMISFACT L0001938     HRDOW 0.0 0.0 0.0 0.0 0.0 0.0
EMISFACT L0001939     HRDOW 0.0 0.0 0.0 0.0 0.0 0.0
EMISFACT L0001939     HRDOW 1.0 1.0 1.0 1.0 1.0 1.0
EMISFACT L0001939     HRDOW 1.0 1.0 1.0 1.0 0.0 0.0
EMISFACT L0001939     HRDOW 0.0 0.0 0.0 0.0 0.0 0.0
EMISFACT L0001940     HRDOW 0.0 0.0 0.0 0.0 0.0 0.0
EMISFACT L0001940     HRDOW 1.0 1.0 1.0 1.0 1.0 1.0
EMISFACT L0001940     HRDOW 1.0 1.0 1.0 1.0 0.0 0.0
EMISFACT L0001940     HRDOW 0.0 0.0 0.0 0.0 0.0 0.0
EMISFACT L0001941     HRDOW 0.0 0.0 0.0 0.0 0.0 0.0
EMISFACT L0001941     HRDOW 1.0 1.0 1.0 1.0 1.0 1.0
EMISFACT L0001941     HRDOW 1.0 1.0 1.0 1.0 0.0 0.0
EMISFACT L0001941     HRDOW 0.0 0.0 0.0 0.0 0.0 0.0
EMISFACT L0001942     HRDOW 0.0 0.0 0.0 0.0 0.0 0.0
EMISFACT L0001942     HRDOW 1.0 1.0 1.0 1.0 1.0 1.0
EMISFACT L0001942     HRDOW 1.0 1.0 1.0 1.0 0.0 0.0
EMISFACT L0001942     HRDOW 0.0 0.0 0.0 0.0 0.0 0.0
EMISFACT L0001943     HRDOW 0.0 0.0 0.0 0.0 0.0 0.0
```

```
EMISFACT L0001943     HRDOW 1.0 1.0 1.0 1.0 1.0 1.0
EMISFACT L0001943     HRDOW 1.0 1.0 1.0 1.0 0.0 0.0
EMISFACT L0001943     HRDOW 0.0 0.0 0.0 0.0 0.0 0.0
EMISFACT L0001944     HRDOW 0.0 0.0 0.0 0.0 0.0 0.0
EMISFACT L0001944     HRDOW 1.0 1.0 1.0 1.0 1.0 1.0
EMISFACT L0001944     HRDOW 1.0 1.0 1.0 1.0 0.0 0.0
EMISFACT L0001944     HRDOW 0.0 0.0 0.0 0.0 0.0 0.0
EMISFACT L0001945     HRDOW 0.0 0.0 0.0 0.0 0.0 0.0
EMISFACT L0001945     HRDOW 1.0 1.0 1.0 1.0 1.0 1.0
EMISFACT L0001945     HRDOW 1.0 1.0 1.0 1.0 0.0 0.0
EMISFACT L0001945     HRDOW 0.0 0.0 0.0 0.0 0.0 0.0
EMISFACT L0001946     HRDOW 0.0 0.0 0.0 0.0 0.0 0.0
EMISFACT L0001946     HRDOW 1.0 1.0 1.0 1.0 1.0 1.0
EMISFACT L0001946     HRDOW 1.0 1.0 1.0 1.0 0.0 0.0
EMISFACT L0001946     HRDOW 0.0 0.0 0.0 0.0 0.0 0.0
EMISFACT L0001947     HRDOW 0.0 0.0 0.0 0.0 0.0 0.0
EMISFACT L0001947     HRDOW 1.0 1.0 1.0 1.0 1.0 1.0
EMISFACT L0001947     HRDOW 1.0 1.0 1.0 1.0 0.0 0.0
EMISFACT L0001947     HRDOW 0.0 0.0 0.0 0.0 0.0 0.0
EMISFACT L0001948     HRDOW 0.0 0.0 0.0 0.0 0.0 0.0
EMISFACT L0001948     HRDOW 1.0 1.0 1.0 1.0 1.0 1.0
EMISFACT L0001948     HRDOW 1.0 1.0 1.0 1.0 0.0 0.0
EMISFACT L0001948     HRDOW 0.0 0.0 0.0 0.0 0.0 0.0
EMISFACT L0001949     HRDOW 0.0 0.0 0.0 0.0 0.0 0.0
EMISFACT L0001949     HRDOW 1.0 1.0 1.0 1.0 1.0 1.0
EMISFACT L0001949     HRDOW 1.0 1.0 1.0 1.0 0.0 0.0
EMISFACT L0001949     HRDOW 0.0 0.0 0.0 0.0 0.0 0.0
EMISFACT L0001950     HRDOW 0.0 0.0 0.0 0.0 0.0 0.0
EMISFACT L0001950     HRDOW 1.0 1.0 1.0 1.0 1.0 1.0
EMISFACT L0001950     HRDOW 1.0 1.0 1.0 1.0 0.0 0.0
EMISFACT L0001950     HRDOW 0.0 0.0 0.0 0.0 0.0 0.0
EMISFACT L0001951     HRDOW 0.0 0.0 0.0 0.0 0.0 0.0
EMISFACT L0001951     HRDOW 1.0 1.0 1.0 1.0 1.0 1.0
EMISFACT L0001951     HRDOW 1.0 1.0 1.0 1.0 0.0 0.0
EMISFACT L0001951     HRDOW 0.0 0.0 0.0 0.0 0.0 0.0
EMISFACT L0001952     HRDOW 0.0 0.0 0.0 0.0 0.0 0.0
EMISFACT L0001952     HRDOW 1.0 1.0 1.0 1.0 1.0 1.0
EMISFACT L0001952     HRDOW 1.0 1.0 1.0 1.0 0.0 0.0
EMISFACT L0001952     HRDOW 0.0 0.0 0.0 0.0 0.0 0.0
EMISFACT L0001953     HRDOW 0.0 0.0 0.0 0.0 0.0 0.0
EMISFACT L0001953     HRDOW 1.0 1.0 1.0 1.0 1.0 1.0
EMISFACT L0001953     HRDOW 1.0 1.0 1.0 1.0 0.0 0.0
EMISFACT L0001953     HRDOW 0.0 0.0 0.0 0.0 0.0 0.0
EMISFACT L0001954     HRDOW 0.0 0.0 0.0 0.0 0.0 0.0
EMISFACT L0001954     HRDOW 1.0 1.0 1.0 1.0 1.0 1.0
EMISFACT L0001954     HRDOW 1.0 1.0 1.0 1.0 0.0 0.0
EMISFACT L0001954     HRDOW 0.0 0.0 0.0 0.0 0.0 0.0
EMISFACT L0001955     HRDOW 0.0 0.0 0.0 0.0 0.0 0.0
EMISFACT L0001955     HRDOW 1.0 1.0 1.0 1.0 1.0 1.0
EMISFACT L0001955     HRDOW 1.0 1.0 1.0 1.0 0.0 0.0
EMISFACT L0001955     HRDOW 0.0 0.0 0.0 0.0 0.0 0.0
EMISFACT L0001956     HRDOW 0.0 0.0 0.0 0.0 0.0 0.0
EMISFACT L0001956     HRDOW 1.0 1.0 1.0 1.0 1.0 1.0
EMISFACT L0001956     HRDOW 1.0 1.0 1.0 1.0 0.0 0.0
EMISFACT L0001956     HRDOW 0.0 0.0 0.0 0.0 0.0 0.0
EMISFACT L0001957     HRDOW 0.0 0.0 0.0 0.0 0.0 0.0
EMISFACT L0001957     HRDOW 1.0 1.0 1.0 1.0 1.0 1.0
EMISFACT L0001957     HRDOW 1.0 1.0 1.0 1.0 0.0 0.0
EMISFACT L0001957     HRDOW 0.0 0.0 0.0 0.0 0.0 0.0
```

```
** Saturday:
   EMISFACT L0001870     HRDOW 0.0 0.0 0.0 0.0 0.0 0.0
   EMISFACT L0001870     HRDOW 0.0 0.0 0.0 0.0 0.0 0.0
   EMISFACT L0001870     HRDOW 0.0 0.0 0.0 0.0 0.0 0.0
   EMISFACT L0001870     HRDOW 0.0 0.0 0.0 0.0 0.0 0.0
   EMISFACT L0001871     HRDOW 0.0 0.0 0.0 0.0 0.0 0.0
   EMISFACT L0001871     HRDOW 0.0 0.0 0.0 0.0 0.0 0.0
   EMISFACT L0001871     HRDOW 0.0 0.0 0.0 0.0 0.0 0.0
   EMISFACT L0001871     HRDOW 0.0 0.0 0.0 0.0 0.0 0.0
   EMISFACT L0001872     HRDOW 0.0 0.0 0.0 0.0 0.0 0.0
   EMISFACT L0001872     HRDOW 0.0 0.0 0.0 0.0 0.0 0.0
   EMISFACT L0001872     HRDOW 0.0 0.0 0.0 0.0 0.0 0.0
   EMISFACT L0001872     HRDOW 0.0 0.0 0.0 0.0 0.0 0.0
   EMISFACT L0001873     HRDOW 0.0 0.0 0.0 0.0 0.0 0.0
   EMISFACT L0001873     HRDOW 0.0 0.0 0.0 0.0 0.0 0.0
   EMISFACT L0001873     HRDOW 0.0 0.0 0.0 0.0 0.0 0.0
   EMISFACT L0001873     HRDOW 0.0 0.0 0.0 0.0 0.0 0.0
   EMISFACT L0001874     HRDOW 0.0 0.0 0.0 0.0 0.0 0.0
   EMISFACT L0001874     HRDOW 0.0 0.0 0.0 0.0 0.0 0.0
   EMISFACT L0001874     HRDOW 0.0 0.0 0.0 0.0 0.0 0.0
   EMISFACT L0001874     HRDOW 0.0 0.0 0.0 0.0 0.0 0.0
   EMISFACT L0001875     HRDOW 0.0 0.0 0.0 0.0 0.0 0.0
   EMISFACT L0001875     HRDOW 0.0 0.0 0.0 0.0 0.0 0.0
   EMISFACT L0001875     HRDOW 0.0 0.0 0.0 0.0 0.0 0.0
   EMISFACT L0001875     HRDOW 0.0 0.0 0.0 0.0 0.0 0.0
   EMISFACT L0001876     HRDOW 0.0 0.0 0.0 0.0 0.0 0.0
   EMISFACT L0001876     HRDOW 0.0 0.0 0.0 0.0 0.0 0.0
   EMISFACT L0001876     HRDOW 0.0 0.0 0.0 0.0 0.0 0.0
   EMISFACT L0001876     HRDOW 0.0 0.0 0.0 0.0 0.0 0.0
   EMISFACT L0001877     HRDOW 0.0 0.0 0.0 0.0 0.0 0.0
   EMISFACT L0001877     HRDOW 0.0 0.0 0.0 0.0 0.0 0.0
   EMISFACT L0001877     HRDOW 0.0 0.0 0.0 0.0 0.0 0.0
   EMISFACT L0001877     HRDOW 0.0 0.0 0.0 0.0 0.0 0.0
   EMISFACT L0001878     HRDOW 0.0 0.0 0.0 0.0 0.0 0.0
   EMISFACT L0001878     HRDOW 0.0 0.0 0.0 0.0 0.0 0.0
   EMISFACT L0001878     HRDOW 0.0 0.0 0.0 0.0 0.0 0.0
   EMISFACT L0001878     HRDOW 0.0 0.0 0.0 0.0 0.0 0.0
   EMISFACT L0001879     HRDOW 0.0 0.0 0.0 0.0 0.0 0.0
   EMISFACT L0001879     HRDOW 0.0 0.0 0.0 0.0 0.0 0.0
   EMISFACT L0001879     HRDOW 0.0 0.0 0.0 0.0 0.0 0.0
   EMISFACT L0001879     HRDOW 0.0 0.0 0.0 0.0 0.0 0.0
   EMISFACT L0001880     HRDOW 0.0 0.0 0.0 0.0 0.0 0.0
   EMISFACT L0001880     HRDOW 0.0 0.0 0.0 0.0 0.0 0.0
   EMISFACT L0001880     HRDOW 0.0 0.0 0.0 0.0 0.0 0.0
   EMISFACT L0001880     HRDOW 0.0 0.0 0.0 0.0 0.0 0.0
   EMISFACT L0001881     HRDOW 0.0 0.0 0.0 0.0 0.0 0.0
   EMISFACT L0001881     HRDOW 0.0 0.0 0.0 0.0 0.0 0.0
   EMISFACT L0001881     HRDOW 0.0 0.0 0.0 0.0 0.0 0.0
   EMISFACT L0001881     HRDOW 0.0 0.0 0.0 0.0 0.0 0.0
   EMISFACT L0001882     HRDOW 0.0 0.0 0.0 0.0 0.0 0.0
   EMISFACT L0001882     HRDOW 0.0 0.0 0.0 0.0 0.0 0.0
   EMISFACT L0001882     HRDOW 0.0 0.0 0.0 0.0 0.0 0.0
   EMISFACT L0001882     HRDOW 0.0 0.0 0.0 0.0 0.0 0.0
   EMISFACT L0001883     HRDOW 0.0 0.0 0.0 0.0 0.0 0.0
   EMISFACT L0001883     HRDOW 0.0 0.0 0.0 0.0 0.0 0.0
   EMISFACT L0001883     HRDOW 0.0 0.0 0.0 0.0 0.0 0.0
   EMISFACT L0001883     HRDOW 0.0 0.0 0.0 0.0 0.0 0.0
   EMISFACT L0001884     HRDOW 0.0 0.0 0.0 0.0 0.0 0.0
   EMISFACT L0001884     HRDOW 0.0 0.0 0.0 0.0 0.0 0.0
```

```
EMISFACT L0001884     HRDOW 0.0 0.0 0.0 0.0 0.0 0.0
EMISFACT L0001884     HRDOW 0.0 0.0 0.0 0.0 0.0 0.0
EMISFACT L0001885     HRDOW 0.0 0.0 0.0 0.0 0.0 0.0
EMISFACT L0001885     HRDOW 0.0 0.0 0.0 0.0 0.0 0.0
EMISFACT L0001885     HRDOW 0.0 0.0 0.0 0.0 0.0 0.0
EMISFACT L0001885     HRDOW 0.0 0.0 0.0 0.0 0.0 0.0
EMISFACT L0001886     HRDOW 0.0 0.0 0.0 0.0 0.0 0.0
EMISFACT L0001886     HRDOW 0.0 0.0 0.0 0.0 0.0 0.0
EMISFACT L0001886     HRDOW 0.0 0.0 0.0 0.0 0.0 0.0
EMISFACT L0001886     HRDOW 0.0 0.0 0.0 0.0 0.0 0.0
EMISFACT L0001887     HRDOW 0.0 0.0 0.0 0.0 0.0 0.0
EMISFACT L0001887     HRDOW 0.0 0.0 0.0 0.0 0.0 0.0
EMISFACT L0001887     HRDOW 0.0 0.0 0.0 0.0 0.0 0.0
EMISFACT L0001887     HRDOW 0.0 0.0 0.0 0.0 0.0 0.0
EMISFACT L0001888     HRDOW 0.0 0.0 0.0 0.0 0.0 0.0
EMISFACT L0001888     HRDOW 0.0 0.0 0.0 0.0 0.0 0.0
EMISFACT L0001888     HRDOW 0.0 0.0 0.0 0.0 0.0 0.0
EMISFACT L0001888     HRDOW 0.0 0.0 0.0 0.0 0.0 0.0
EMISFACT L0001889     HRDOW 0.0 0.0 0.0 0.0 0.0 0.0
EMISFACT L0001889     HRDOW 0.0 0.0 0.0 0.0 0.0 0.0
EMISFACT L0001889     HRDOW 0.0 0.0 0.0 0.0 0.0 0.0
EMISFACT L0001889     HRDOW 0.0 0.0 0.0 0.0 0.0 0.0
EMISFACT L0001890     HRDOW 0.0 0.0 0.0 0.0 0.0 0.0
EMISFACT L0001890     HRDOW 0.0 0.0 0.0 0.0 0.0 0.0
EMISFACT L0001890     HRDOW 0.0 0.0 0.0 0.0 0.0 0.0
EMISFACT L0001890     HRDOW 0.0 0.0 0.0 0.0 0.0 0.0
EMISFACT L0001891     HRDOW 0.0 0.0 0.0 0.0 0.0 0.0
EMISFACT L0001891     HRDOW 0.0 0.0 0.0 0.0 0.0 0.0
EMISFACT L0001891     HRDOW 0.0 0.0 0.0 0.0 0.0 0.0
EMISFACT L0001891     HRDOW 0.0 0.0 0.0 0.0 0.0 0.0
EMISFACT L0001892     HRDOW 0.0 0.0 0.0 0.0 0.0 0.0
EMISFACT L0001892     HRDOW 0.0 0.0 0.0 0.0 0.0 0.0
EMISFACT L0001892     HRDOW 0.0 0.0 0.0 0.0 0.0 0.0
EMISFACT L0001892     HRDOW 0.0 0.0 0.0 0.0 0.0 0.0
EMISFACT L0001893     HRDOW 0.0 0.0 0.0 0.0 0.0 0.0
EMISFACT L0001893     HRDOW 0.0 0.0 0.0 0.0 0.0 0.0
EMISFACT L0001893     HRDOW 0.0 0.0 0.0 0.0 0.0 0.0
EMISFACT L0001893     HRDOW 0.0 0.0 0.0 0.0 0.0 0.0
EMISFACT L0001894     HRDOW 0.0 0.0 0.0 0.0 0.0 0.0
EMISFACT L0001894     HRDOW 0.0 0.0 0.0 0.0 0.0 0.0
EMISFACT L0001894     HRDOW 0.0 0.0 0.0 0.0 0.0 0.0
EMISFACT L0001894     HRDOW 0.0 0.0 0.0 0.0 0.0 0.0
EMISFACT L0001895     HRDOW 0.0 0.0 0.0 0.0 0.0 0.0
EMISFACT L0001895     HRDOW 0.0 0.0 0.0 0.0 0.0 0.0
EMISFACT L0001895     HRDOW 0.0 0.0 0.0 0.0 0.0 0.0
EMISFACT L0001895     HRDOW 0.0 0.0 0.0 0.0 0.0 0.0
EMISFACT L0001896     HRDOW 0.0 0.0 0.0 0.0 0.0 0.0
EMISFACT L0001896     HRDOW 0.0 0.0 0.0 0.0 0.0 0.0
EMISFACT L0001896     HRDOW 0.0 0.0 0.0 0.0 0.0 0.0
EMISFACT L0001896     HRDOW 0.0 0.0 0.0 0.0 0.0 0.0
EMISFACT L0001897     HRDOW 0.0 0.0 0.0 0.0 0.0 0.0
EMISFACT L0001897     HRDOW 0.0 0.0 0.0 0.0 0.0 0.0
EMISFACT L0001897     HRDOW 0.0 0.0 0.0 0.0 0.0 0.0
EMISFACT L0001897     HRDOW 0.0 0.0 0.0 0.0 0.0 0.0
EMISFACT L0001898     HRDOW 0.0 0.0 0.0 0.0 0.0 0.0
EMISFACT L0001898     HRDOW 0.0 0.0 0.0 0.0 0.0 0.0
EMISFACT L0001898     HRDOW 0.0 0.0 0.0 0.0 0.0 0.0
EMISFACT L0001898     HRDOW 0.0 0.0 0.0 0.0 0.0 0.0
EMISFACT L0001899     HRDOW 0.0 0.0 0.0 0.0 0.0 0.0
```

```
EMISFACT L0001899     HRDOW 0.0 0.0 0.0 0.0 0.0 0.0
EMISFACT L0001899     HRDOW 0.0 0.0 0.0 0.0 0.0 0.0
EMISFACT L0001899     HRDOW 0.0 0.0 0.0 0.0 0.0 0.0
EMISFACT L0001900     HRDOW 0.0 0.0 0.0 0.0 0.0 0.0
EMISFACT L0001900     HRDOW 0.0 0.0 0.0 0.0 0.0 0.0
EMISFACT L0001900     HRDOW 0.0 0.0 0.0 0.0 0.0 0.0
EMISFACT L0001900     HRDOW 0.0 0.0 0.0 0.0 0.0 0.0
EMISFACT L0001901     HRDOW 0.0 0.0 0.0 0.0 0.0 0.0
EMISFACT L0001901     HRDOW 0.0 0.0 0.0 0.0 0.0 0.0
EMISFACT L0001901     HRDOW 0.0 0.0 0.0 0.0 0.0 0.0
EMISFACT L0001901     HRDOW 0.0 0.0 0.0 0.0 0.0 0.0
EMISFACT L0001902     HRDOW 0.0 0.0 0.0 0.0 0.0 0.0
EMISFACT L0001902     HRDOW 0.0 0.0 0.0 0.0 0.0 0.0
EMISFACT L0001902     HRDOW 0.0 0.0 0.0 0.0 0.0 0.0
EMISFACT L0001902     HRDOW 0.0 0.0 0.0 0.0 0.0 0.0
EMISFACT L0001903     HRDOW 0.0 0.0 0.0 0.0 0.0 0.0
EMISFACT L0001903     HRDOW 0.0 0.0 0.0 0.0 0.0 0.0
EMISFACT L0001903     HRDOW 0.0 0.0 0.0 0.0 0.0 0.0
EMISFACT L0001903     HRDOW 0.0 0.0 0.0 0.0 0.0 0.0
EMISFACT L0001904     HRDOW 0.0 0.0 0.0 0.0 0.0 0.0
EMISFACT L0001904     HRDOW 0.0 0.0 0.0 0.0 0.0 0.0
EMISFACT L0001904     HRDOW 0.0 0.0 0.0 0.0 0.0 0.0
EMISFACT L0001904     HRDOW 0.0 0.0 0.0 0.0 0.0 0.0
EMISFACT L0001905     HRDOW 0.0 0.0 0.0 0.0 0.0 0.0
EMISFACT L0001905     HRDOW 0.0 0.0 0.0 0.0 0.0 0.0
EMISFACT L0001905     HRDOW 0.0 0.0 0.0 0.0 0.0 0.0
EMISFACT L0001905     HRDOW 0.0 0.0 0.0 0.0 0.0 0.0
EMISFACT L0001906     HRDOW 0.0 0.0 0.0 0.0 0.0 0.0
EMISFACT L0001906     HRDOW 0.0 0.0 0.0 0.0 0.0 0.0
EMISFACT L0001906     HRDOW 0.0 0.0 0.0 0.0 0.0 0.0
EMISFACT L0001906     HRDOW 0.0 0.0 0.0 0.0 0.0 0.0
EMISFACT L0001907     HRDOW 0.0 0.0 0.0 0.0 0.0 0.0
EMISFACT L0001907     HRDOW 0.0 0.0 0.0 0.0 0.0 0.0
EMISFACT L0001907     HRDOW 0.0 0.0 0.0 0.0 0.0 0.0
EMISFACT L0001907     HRDOW 0.0 0.0 0.0 0.0 0.0 0.0
EMISFACT L0001908     HRDOW 0.0 0.0 0.0 0.0 0.0 0.0
EMISFACT L0001908     HRDOW 0.0 0.0 0.0 0.0 0.0 0.0
EMISFACT L0001908     HRDOW 0.0 0.0 0.0 0.0 0.0 0.0
EMISFACT L0001908     HRDOW 0.0 0.0 0.0 0.0 0.0 0.0
EMISFACT L0001909     HRDOW 0.0 0.0 0.0 0.0 0.0 0.0
EMISFACT L0001909     HRDOW 0.0 0.0 0.0 0.0 0.0 0.0
EMISFACT L0001909     HRDOW 0.0 0.0 0.0 0.0 0.0 0.0
EMISFACT L0001909     HRDOW 0.0 0.0 0.0 0.0 0.0 0.0
EMISFACT L0001910     HRDOW 0.0 0.0 0.0 0.0 0.0 0.0
EMISFACT L0001910     HRDOW 0.0 0.0 0.0 0.0 0.0 0.0
EMISFACT L0001910     HRDOW 0.0 0.0 0.0 0.0 0.0 0.0
EMISFACT L0001910     HRDOW 0.0 0.0 0.0 0.0 0.0 0.0
EMISFACT L0001911     HRDOW 0.0 0.0 0.0 0.0 0.0 0.0
EMISFACT L0001911     HRDOW 0.0 0.0 0.0 0.0 0.0 0.0
EMISFACT L0001911     HRDOW 0.0 0.0 0.0 0.0 0.0 0.0
EMISFACT L0001911     HRDOW 0.0 0.0 0.0 0.0 0.0 0.0
EMISFACT L0001912     HRDOW 0.0 0.0 0.0 0.0 0.0 0.0
EMISFACT L0001912     HRDOW 0.0 0.0 0.0 0.0 0.0 0.0
EMISFACT L0001912     HRDOW 0.0 0.0 0.0 0.0 0.0 0.0
EMISFACT L0001912     HRDOW 0.0 0.0 0.0 0.0 0.0 0.0
EMISFACT L0001913     HRDOW 0.0 0.0 0.0 0.0 0.0 0.0
EMISFACT L0001913     HRDOW 0.0 0.0 0.0 0.0 0.0 0.0
EMISFACT L0001913     HRDOW 0.0 0.0 0.0 0.0 0.0 0.0
EMISFACT L0001913     HRDOW 0.0 0.0 0.0 0.0 0.0 0.0
```

```
EMISFACT L0001914     HRDOW 0.0 0.0 0.0 0.0 0.0 0.0
EMISFACT L0001914     HRDOW 0.0 0.0 0.0 0.0 0.0 0.0
EMISFACT L0001914     HRDOW 0.0 0.0 0.0 0.0 0.0 0.0
EMISFACT L0001914     HRDOW 0.0 0.0 0.0 0.0 0.0 0.0
EMISFACT L0001915     HRDOW 0.0 0.0 0.0 0.0 0.0 0.0
EMISFACT L0001915     HRDOW 0.0 0.0 0.0 0.0 0.0 0.0
EMISFACT L0001915     HRDOW 0.0 0.0 0.0 0.0 0.0 0.0
EMISFACT L0001915     HRDOW 0.0 0.0 0.0 0.0 0.0 0.0
EMISFACT L0001916     HRDOW 0.0 0.0 0.0 0.0 0.0 0.0
EMISFACT L0001916     HRDOW 0.0 0.0 0.0 0.0 0.0 0.0
EMISFACT L0001916     HRDOW 0.0 0.0 0.0 0.0 0.0 0.0
EMISFACT L0001916     HRDOW 0.0 0.0 0.0 0.0 0.0 0.0
EMISFACT L0001917     HRDOW 0.0 0.0 0.0 0.0 0.0 0.0
EMISFACT L0001917     HRDOW 0.0 0.0 0.0 0.0 0.0 0.0
EMISFACT L0001917     HRDOW 0.0 0.0 0.0 0.0 0.0 0.0
EMISFACT L0001917     HRDOW 0.0 0.0 0.0 0.0 0.0 0.0
EMISFACT L0001918     HRDOW 0.0 0.0 0.0 0.0 0.0 0.0
EMISFACT L0001918     HRDOW 0.0 0.0 0.0 0.0 0.0 0.0
EMISFACT L0001918     HRDOW 0.0 0.0 0.0 0.0 0.0 0.0
EMISFACT L0001918     HRDOW 0.0 0.0 0.0 0.0 0.0 0.0
EMISFACT L0001919     HRDOW 0.0 0.0 0.0 0.0 0.0 0.0
EMISFACT L0001919     HRDOW 0.0 0.0 0.0 0.0 0.0 0.0
EMISFACT L0001919     HRDOW 0.0 0.0 0.0 0.0 0.0 0.0
EMISFACT L0001919     HRDOW 0.0 0.0 0.0 0.0 0.0 0.0
EMISFACT L0001920     HRDOW 0.0 0.0 0.0 0.0 0.0 0.0
EMISFACT L0001920     HRDOW 0.0 0.0 0.0 0.0 0.0 0.0
EMISFACT L0001920     HRDOW 0.0 0.0 0.0 0.0 0.0 0.0
EMISFACT L0001920     HRDOW 0.0 0.0 0.0 0.0 0.0 0.0
EMISFACT L0001921     HRDOW 0.0 0.0 0.0 0.0 0.0 0.0
EMISFACT L0001921     HRDOW 0.0 0.0 0.0 0.0 0.0 0.0
EMISFACT L0001921     HRDOW 0.0 0.0 0.0 0.0 0.0 0.0
EMISFACT L0001921     HRDOW 0.0 0.0 0.0 0.0 0.0 0.0
EMISFACT L0001922     HRDOW 0.0 0.0 0.0 0.0 0.0 0.0
EMISFACT L0001922     HRDOW 0.0 0.0 0.0 0.0 0.0 0.0
EMISFACT L0001922     HRDOW 0.0 0.0 0.0 0.0 0.0 0.0
EMISFACT L0001922     HRDOW 0.0 0.0 0.0 0.0 0.0 0.0
EMISFACT L0001923     HRDOW 0.0 0.0 0.0 0.0 0.0 0.0
EMISFACT L0001923     HRDOW 0.0 0.0 0.0 0.0 0.0 0.0
EMISFACT L0001923     HRDOW 0.0 0.0 0.0 0.0 0.0 0.0
EMISFACT L0001923     HRDOW 0.0 0.0 0.0 0.0 0.0 0.0
EMISFACT L0001924     HRDOW 0.0 0.0 0.0 0.0 0.0 0.0
EMISFACT L0001924     HRDOW 0.0 0.0 0.0 0.0 0.0 0.0
EMISFACT L0001924     HRDOW 0.0 0.0 0.0 0.0 0.0 0.0
EMISFACT L0001924     HRDOW 0.0 0.0 0.0 0.0 0.0 0.0
EMISFACT L0001925     HRDOW 0.0 0.0 0.0 0.0 0.0 0.0
EMISFACT L0001925     HRDOW 0.0 0.0 0.0 0.0 0.0 0.0
EMISFACT L0001925     HRDOW 0.0 0.0 0.0 0.0 0.0 0.0
EMISFACT L0001925     HRDOW 0.0 0.0 0.0 0.0 0.0 0.0
EMISFACT L0001926     HRDOW 0.0 0.0 0.0 0.0 0.0 0.0
EMISFACT L0001926     HRDOW 0.0 0.0 0.0 0.0 0.0 0.0
EMISFACT L0001926     HRDOW 0.0 0.0 0.0 0.0 0.0 0.0
EMISFACT L0001926     HRDOW 0.0 0.0 0.0 0.0 0.0 0.0
EMISFACT L0001927     HRDOW 0.0 0.0 0.0 0.0 0.0 0.0
EMISFACT L0001927     HRDOW 0.0 0.0 0.0 0.0 0.0 0.0
EMISFACT L0001927     HRDOW 0.0 0.0 0.0 0.0 0.0 0.0
EMISFACT L0001927     HRDOW 0.0 0.0 0.0 0.0 0.0 0.0
EMISFACT L0001928     HRDOW 0.0 0.0 0.0 0.0 0.0 0.0
EMISFACT L0001928     HRDOW 0.0 0.0 0.0 0.0 0.0 0.0
EMISFACT L0001928     HRDOW 0.0 0.0 0.0 0.0 0.0 0.0
```

```
EMISFACT L0001928     HRDOW 0.0 0.0 0.0 0.0 0.0 0.0
EMISFACT L0001929     HRDOW 0.0 0.0 0.0 0.0 0.0 0.0
EMISFACT L0001929     HRDOW 0.0 0.0 0.0 0.0 0.0 0.0
EMISFACT L0001929     HRDOW 0.0 0.0 0.0 0.0 0.0 0.0
EMISFACT L0001929     HRDOW 0.0 0.0 0.0 0.0 0.0 0.0
EMISFACT L0001930     HRDOW 0.0 0.0 0.0 0.0 0.0 0.0
EMISFACT L0001930     HRDOW 0.0 0.0 0.0 0.0 0.0 0.0
EMISFACT L0001930     HRDOW 0.0 0.0 0.0 0.0 0.0 0.0
EMISFACT L0001930     HRDOW 0.0 0.0 0.0 0.0 0.0 0.0
EMISFACT L0001931     HRDOW 0.0 0.0 0.0 0.0 0.0 0.0
EMISFACT L0001931     HRDOW 0.0 0.0 0.0 0.0 0.0 0.0
EMISFACT L0001931     HRDOW 0.0 0.0 0.0 0.0 0.0 0.0
EMISFACT L0001931     HRDOW 0.0 0.0 0.0 0.0 0.0 0.0
EMISFACT L0001932     HRDOW 0.0 0.0 0.0 0.0 0.0 0.0
EMISFACT L0001932     HRDOW 0.0 0.0 0.0 0.0 0.0 0.0
EMISFACT L0001932     HRDOW 0.0 0.0 0.0 0.0 0.0 0.0
EMISFACT L0001932     HRDOW 0.0 0.0 0.0 0.0 0.0 0.0
EMISFACT L0001933     HRDOW 0.0 0.0 0.0 0.0 0.0 0.0
EMISFACT L0001933     HRDOW 0.0 0.0 0.0 0.0 0.0 0.0
EMISFACT L0001933     HRDOW 0.0 0.0 0.0 0.0 0.0 0.0
EMISFACT L0001933     HRDOW 0.0 0.0 0.0 0.0 0.0 0.0
EMISFACT L0001934     HRDOW 0.0 0.0 0.0 0.0 0.0 0.0
EMISFACT L0001934     HRDOW 0.0 0.0 0.0 0.0 0.0 0.0
EMISFACT L0001934     HRDOW 0.0 0.0 0.0 0.0 0.0 0.0
EMISFACT L0001934     HRDOW 0.0 0.0 0.0 0.0 0.0 0.0
EMISFACT L0001935     HRDOW 0.0 0.0 0.0 0.0 0.0 0.0
EMISFACT L0001935     HRDOW 0.0 0.0 0.0 0.0 0.0 0.0
EMISFACT L0001935     HRDOW 0.0 0.0 0.0 0.0 0.0 0.0
EMISFACT L0001935     HRDOW 0.0 0.0 0.0 0.0 0.0 0.0
EMISFACT L0001936     HRDOW 0.0 0.0 0.0 0.0 0.0 0.0
EMISFACT L0001936     HRDOW 0.0 0.0 0.0 0.0 0.0 0.0
EMISFACT L0001936     HRDOW 0.0 0.0 0.0 0.0 0.0 0.0
EMISFACT L0001936     HRDOW 0.0 0.0 0.0 0.0 0.0 0.0
EMISFACT L0001937     HRDOW 0.0 0.0 0.0 0.0 0.0 0.0
EMISFACT L0001937     HRDOW 0.0 0.0 0.0 0.0 0.0 0.0
EMISFACT L0001937     HRDOW 0.0 0.0 0.0 0.0 0.0 0.0
EMISFACT L0001937     HRDOW 0.0 0.0 0.0 0.0 0.0 0.0
EMISFACT L0001938     HRDOW 0.0 0.0 0.0 0.0 0.0 0.0
EMISFACT L0001938     HRDOW 0.0 0.0 0.0 0.0 0.0 0.0
EMISFACT L0001938     HRDOW 0.0 0.0 0.0 0.0 0.0 0.0
EMISFACT L0001938     HRDOW 0.0 0.0 0.0 0.0 0.0 0.0
EMISFACT L0001939     HRDOW 0.0 0.0 0.0 0.0 0.0 0.0
EMISFACT L0001939     HRDOW 0.0 0.0 0.0 0.0 0.0 0.0
EMISFACT L0001939     HRDOW 0.0 0.0 0.0 0.0 0.0 0.0
EMISFACT L0001939     HRDOW 0.0 0.0 0.0 0.0 0.0 0.0
EMISFACT L0001940     HRDOW 0.0 0.0 0.0 0.0 0.0 0.0
EMISFACT L0001940     HRDOW 0.0 0.0 0.0 0.0 0.0 0.0
EMISFACT L0001940     HRDOW 0.0 0.0 0.0 0.0 0.0 0.0
EMISFACT L0001940     HRDOW 0.0 0.0 0.0 0.0 0.0 0.0
EMISFACT L0001941     HRDOW 0.0 0.0 0.0 0.0 0.0 0.0
EMISFACT L0001941     HRDOW 0.0 0.0 0.0 0.0 0.0 0.0
EMISFACT L0001941     HRDOW 0.0 0.0 0.0 0.0 0.0 0.0
EMISFACT L0001941     HRDOW 0.0 0.0 0.0 0.0 0.0 0.0
EMISFACT L0001942     HRDOW 0.0 0.0 0.0 0.0 0.0 0.0
EMISFACT L0001942     HRDOW 0.0 0.0 0.0 0.0 0.0 0.0
EMISFACT L0001942     HRDOW 0.0 0.0 0.0 0.0 0.0 0.0
EMISFACT L0001942     HRDOW 0.0 0.0 0.0 0.0 0.0 0.0
EMISFACT L0001943     HRDOW 0.0 0.0 0.0 0.0 0.0 0.0
EMISFACT L0001943     HRDOW 0.0 0.0 0.0 0.0 0.0 0.0
```

```
   EMISFACT L0001943     HRDOW 0.0 0.0 0.0 0.0 0.0 0.0
   EMISFACT L0001943     HRDOW 0.0 0.0 0.0 0.0 0.0 0.0
   EMISFACT L0001944     HRDOW 0.0 0.0 0.0 0.0 0.0 0.0
   EMISFACT L0001944     HRDOW 0.0 0.0 0.0 0.0 0.0 0.0
   EMISFACT L0001944     HRDOW 0.0 0.0 0.0 0.0 0.0 0.0
   EMISFACT L0001944     HRDOW 0.0 0.0 0.0 0.0 0.0 0.0
   EMISFACT L0001945     HRDOW 0.0 0.0 0.0 0.0 0.0 0.0
   EMISFACT L0001945     HRDOW 0.0 0.0 0.0 0.0 0.0 0.0
   EMISFACT L0001945     HRDOW 0.0 0.0 0.0 0.0 0.0 0.0
   EMISFACT L0001945     HRDOW 0.0 0.0 0.0 0.0 0.0 0.0
   EMISFACT L0001946     HRDOW 0.0 0.0 0.0 0.0 0.0 0.0
   EMISFACT L0001946     HRDOW 0.0 0.0 0.0 0.0 0.0 0.0
   EMISFACT L0001946     HRDOW 0.0 0.0 0.0 0.0 0.0 0.0
   EMISFACT L0001946     HRDOW 0.0 0.0 0.0 0.0 0.0 0.0
   EMISFACT L0001947     HRDOW 0.0 0.0 0.0 0.0 0.0 0.0
   EMISFACT L0001947     HRDOW 0.0 0.0 0.0 0.0 0.0 0.0
   EMISFACT L0001947     HRDOW 0.0 0.0 0.0 0.0 0.0 0.0
   EMISFACT L0001947     HRDOW 0.0 0.0 0.0 0.0 0.0 0.0
   EMISFACT L0001948     HRDOW 0.0 0.0 0.0 0.0 0.0 0.0
   EMISFACT L0001948     HRDOW 0.0 0.0 0.0 0.0 0.0 0.0
   EMISFACT L0001948     HRDOW 0.0 0.0 0.0 0.0 0.0 0.0
   EMISFACT L0001948     HRDOW 0.0 0.0 0.0 0.0 0.0 0.0
   EMISFACT L0001949     HRDOW 0.0 0.0 0.0 0.0 0.0 0.0
   EMISFACT L0001949     HRDOW 0.0 0.0 0.0 0.0 0.0 0.0
   EMISFACT L0001949     HRDOW 0.0 0.0 0.0 0.0 0.0 0.0
   EMISFACT L0001949     HRDOW 0.0 0.0 0.0 0.0 0.0 0.0
   EMISFACT L0001950     HRDOW 0.0 0.0 0.0 0.0 0.0 0.0
   EMISFACT L0001950     HRDOW 0.0 0.0 0.0 0.0 0.0 0.0
   EMISFACT L0001950     HRDOW 0.0 0.0 0.0 0.0 0.0 0.0
   EMISFACT L0001950     HRDOW 0.0 0.0 0.0 0.0 0.0 0.0
   EMISFACT L0001951     HRDOW 0.0 0.0 0.0 0.0 0.0 0.0
   EMISFACT L0001951     HRDOW 0.0 0.0 0.0 0.0 0.0 0.0
   EMISFACT L0001951     HRDOW 0.0 0.0 0.0 0.0 0.0 0.0
   EMISFACT L0001951     HRDOW 0.0 0.0 0.0 0.0 0.0 0.0
   EMISFACT L0001952     HRDOW 0.0 0.0 0.0 0.0 0.0 0.0
   EMISFACT L0001952     HRDOW 0.0 0.0 0.0 0.0 0.0 0.0
   EMISFACT L0001952     HRDOW 0.0 0.0 0.0 0.0 0.0 0.0
   EMISFACT L0001952     HRDOW 0.0 0.0 0.0 0.0 0.0 0.0
   EMISFACT L0001953     HRDOW 0.0 0.0 0.0 0.0 0.0 0.0
   EMISFACT L0001953     HRDOW 0.0 0.0 0.0 0.0 0.0 0.0
   EMISFACT L0001953     HRDOW 0.0 0.0 0.0 0.0 0.0 0.0
   EMISFACT L0001953     HRDOW 0.0 0.0 0.0 0.0 0.0 0.0
   EMISFACT L0001954     HRDOW 0.0 0.0 0.0 0.0 0.0 0.0
   EMISFACT L0001954     HRDOW 0.0 0.0 0.0 0.0 0.0 0.0
   EMISFACT L0001954     HRDOW 0.0 0.0 0.0 0.0 0.0 0.0
   EMISFACT L0001954     HRDOW 0.0 0.0 0.0 0.0 0.0 0.0
   EMISFACT L0001955     HRDOW 0.0 0.0 0.0 0.0 0.0 0.0
   EMISFACT L0001955     HRDOW 0.0 0.0 0.0 0.0 0.0 0.0
   EMISFACT L0001955     HRDOW 0.0 0.0 0.0 0.0 0.0 0.0
   EMISFACT L0001955     HRDOW 0.0 0.0 0.0 0.0 0.0 0.0
   EMISFACT L0001956     HRDOW 0.0 0.0 0.0 0.0 0.0 0.0
   EMISFACT L0001956     HRDOW 0.0 0.0 0.0 0.0 0.0 0.0
   EMISFACT L0001956     HRDOW 0.0 0.0 0.0 0.0 0.0 0.0
   EMISFACT L0001956     HRDOW 0.0 0.0 0.0 0.0 0.0 0.0
   EMISFACT L0001957     HRDOW 0.0 0.0 0.0 0.0 0.0 0.0
   EMISFACT L0001957     HRDOW 0.0 0.0 0.0 0.0 0.0 0.0
   EMISFACT L0001957     HRDOW 0.0 0.0 0.0 0.0 0.0 0.0
   EMISFACT L0001957     HRDOW 0.0 0.0 0.0 0.0 0.0 0.0
** Sunday:
```

```
EMISFACT L0001870     HRDOW 0.0 0.0 0.0 0.0 0.0 0.0
EMISFACT L0001870     HRDOW 0.0 0.0 0.0 0.0 0.0 0.0
EMISFACT L0001870     HRDOW 0.0 0.0 0.0 0.0 0.0 0.0
EMISFACT L0001870     HRDOW 0.0 0.0 0.0 0.0 0.0 0.0
EMISFACT L0001871     HRDOW 0.0 0.0 0.0 0.0 0.0 0.0
EMISFACT L0001871     HRDOW 0.0 0.0 0.0 0.0 0.0 0.0
EMISFACT L0001871     HRDOW 0.0 0.0 0.0 0.0 0.0 0.0
EMISFACT L0001871     HRDOW 0.0 0.0 0.0 0.0 0.0 0.0
EMISFACT L0001872     HRDOW 0.0 0.0 0.0 0.0 0.0 0.0
EMISFACT L0001872     HRDOW 0.0 0.0 0.0 0.0 0.0 0.0
EMISFACT L0001872     HRDOW 0.0 0.0 0.0 0.0 0.0 0.0
EMISFACT L0001872     HRDOW 0.0 0.0 0.0 0.0 0.0 0.0
EMISFACT L0001873     HRDOW 0.0 0.0 0.0 0.0 0.0 0.0
EMISFACT L0001873     HRDOW 0.0 0.0 0.0 0.0 0.0 0.0
EMISFACT L0001873     HRDOW 0.0 0.0 0.0 0.0 0.0 0.0
EMISFACT L0001873     HRDOW 0.0 0.0 0.0 0.0 0.0 0.0
EMISFACT L0001874     HRDOW 0.0 0.0 0.0 0.0 0.0 0.0
EMISFACT L0001874     HRDOW 0.0 0.0 0.0 0.0 0.0 0.0
EMISFACT L0001874     HRDOW 0.0 0.0 0.0 0.0 0.0 0.0
EMISFACT L0001874     HRDOW 0.0 0.0 0.0 0.0 0.0 0.0
EMISFACT L0001875     HRDOW 0.0 0.0 0.0 0.0 0.0 0.0
EMISFACT L0001875     HRDOW 0.0 0.0 0.0 0.0 0.0 0.0
EMISFACT L0001875     HRDOW 0.0 0.0 0.0 0.0 0.0 0.0
EMISFACT L0001875     HRDOW 0.0 0.0 0.0 0.0 0.0 0.0
EMISFACT L0001876     HRDOW 0.0 0.0 0.0 0.0 0.0 0.0
EMISFACT L0001876     HRDOW 0.0 0.0 0.0 0.0 0.0 0.0
EMISFACT L0001876     HRDOW 0.0 0.0 0.0 0.0 0.0 0.0
EMISFACT L0001876     HRDOW 0.0 0.0 0.0 0.0 0.0 0.0
EMISFACT L0001877     HRDOW 0.0 0.0 0.0 0.0 0.0 0.0
EMISFACT L0001877     HRDOW 0.0 0.0 0.0 0.0 0.0 0.0
EMISFACT L0001877     HRDOW 0.0 0.0 0.0 0.0 0.0 0.0
EMISFACT L0001877     HRDOW 0.0 0.0 0.0 0.0 0.0 0.0
EMISFACT L0001878     HRDOW 0.0 0.0 0.0 0.0 0.0 0.0
EMISFACT L0001878     HRDOW 0.0 0.0 0.0 0.0 0.0 0.0
EMISFACT L0001878     HRDOW 0.0 0.0 0.0 0.0 0.0 0.0
EMISFACT L0001878     HRDOW 0.0 0.0 0.0 0.0 0.0 0.0
EMISFACT L0001879     HRDOW 0.0 0.0 0.0 0.0 0.0 0.0
EMISFACT L0001879     HRDOW 0.0 0.0 0.0 0.0 0.0 0.0
EMISFACT L0001879     HRDOW 0.0 0.0 0.0 0.0 0.0 0.0
EMISFACT L0001879     HRDOW 0.0 0.0 0.0 0.0 0.0 0.0
EMISFACT L0001880     HRDOW 0.0 0.0 0.0 0.0 0.0 0.0
EMISFACT L0001880     HRDOW 0.0 0.0 0.0 0.0 0.0 0.0
EMISFACT L0001880     HRDOW 0.0 0.0 0.0 0.0 0.0 0.0
EMISFACT L0001880     HRDOW 0.0 0.0 0.0 0.0 0.0 0.0
EMISFACT L0001881     HRDOW 0.0 0.0 0.0 0.0 0.0 0.0
EMISFACT L0001881     HRDOW 0.0 0.0 0.0 0.0 0.0 0.0
EMISFACT L0001881     HRDOW 0.0 0.0 0.0 0.0 0.0 0.0
EMISFACT L0001881     HRDOW 0.0 0.0 0.0 0.0 0.0 0.0
EMISFACT L0001882     HRDOW 0.0 0.0 0.0 0.0 0.0 0.0
EMISFACT L0001882     HRDOW 0.0 0.0 0.0 0.0 0.0 0.0
EMISFACT L0001882     HRDOW 0.0 0.0 0.0 0.0 0.0 0.0
EMISFACT L0001882     HRDOW 0.0 0.0 0.0 0.0 0.0 0.0
EMISFACT L0001883     HRDOW 0.0 0.0 0.0 0.0 0.0 0.0
EMISFACT L0001883     HRDOW 0.0 0.0 0.0 0.0 0.0 0.0
EMISFACT L0001883     HRDOW 0.0 0.0 0.0 0.0 0.0 0.0
EMISFACT L0001883     HRDOW 0.0 0.0 0.0 0.0 0.0 0.0
EMISFACT L0001884     HRDOW 0.0 0.0 0.0 0.0 0.0 0.0
EMISFACT L0001884     HRDOW 0.0 0.0 0.0 0.0 0.0 0.0
EMISFACT L0001884     HRDOW 0.0 0.0 0.0 0.0 0.0 0.0
```

```
EMISFACT L0001884     HRDOW 0.0 0.0 0.0 0.0 0.0 0.0
EMISFACT L0001885     HRDOW 0.0 0.0 0.0 0.0 0.0 0.0
EMISFACT L0001885     HRDOW 0.0 0.0 0.0 0.0 0.0 0.0
EMISFACT L0001885     HRDOW 0.0 0.0 0.0 0.0 0.0 0.0
EMISFACT L0001885     HRDOW 0.0 0.0 0.0 0.0 0.0 0.0
EMISFACT L0001886     HRDOW 0.0 0.0 0.0 0.0 0.0 0.0
EMISFACT L0001886     HRDOW 0.0 0.0 0.0 0.0 0.0 0.0
EMISFACT L0001886     HRDOW 0.0 0.0 0.0 0.0 0.0 0.0
EMISFACT L0001886     HRDOW 0.0 0.0 0.0 0.0 0.0 0.0
EMISFACT L0001887     HRDOW 0.0 0.0 0.0 0.0 0.0 0.0
EMISFACT L0001887     HRDOW 0.0 0.0 0.0 0.0 0.0 0.0
EMISFACT L0001887     HRDOW 0.0 0.0 0.0 0.0 0.0 0.0
EMISFACT L0001887     HRDOW 0.0 0.0 0.0 0.0 0.0 0.0
EMISFACT L0001888     HRDOW 0.0 0.0 0.0 0.0 0.0 0.0
EMISFACT L0001888     HRDOW 0.0 0.0 0.0 0.0 0.0 0.0
EMISFACT L0001888     HRDOW 0.0 0.0 0.0 0.0 0.0 0.0
EMISFACT L0001888     HRDOW 0.0 0.0 0.0 0.0 0.0 0.0
EMISFACT L0001889     HRDOW 0.0 0.0 0.0 0.0 0.0 0.0
EMISFACT L0001889     HRDOW 0.0 0.0 0.0 0.0 0.0 0.0
EMISFACT L0001889     HRDOW 0.0 0.0 0.0 0.0 0.0 0.0
EMISFACT L0001889     HRDOW 0.0 0.0 0.0 0.0 0.0 0.0
EMISFACT L0001890     HRDOW 0.0 0.0 0.0 0.0 0.0 0.0
EMISFACT L0001890     HRDOW 0.0 0.0 0.0 0.0 0.0 0.0
EMISFACT L0001890     HRDOW 0.0 0.0 0.0 0.0 0.0 0.0
EMISFACT L0001890     HRDOW 0.0 0.0 0.0 0.0 0.0 0.0
EMISFACT L0001891     HRDOW 0.0 0.0 0.0 0.0 0.0 0.0
EMISFACT L0001891     HRDOW 0.0 0.0 0.0 0.0 0.0 0.0
EMISFACT L0001891     HRDOW 0.0 0.0 0.0 0.0 0.0 0.0
EMISFACT L0001891     HRDOW 0.0 0.0 0.0 0.0 0.0 0.0
EMISFACT L0001892     HRDOW 0.0 0.0 0.0 0.0 0.0 0.0
EMISFACT L0001892     HRDOW 0.0 0.0 0.0 0.0 0.0 0.0
EMISFACT L0001892     HRDOW 0.0 0.0 0.0 0.0 0.0 0.0
EMISFACT L0001892     HRDOW 0.0 0.0 0.0 0.0 0.0 0.0
EMISFACT L0001893     HRDOW 0.0 0.0 0.0 0.0 0.0 0.0
EMISFACT L0001893     HRDOW 0.0 0.0 0.0 0.0 0.0 0.0
EMISFACT L0001893     HRDOW 0.0 0.0 0.0 0.0 0.0 0.0
EMISFACT L0001893     HRDOW 0.0 0.0 0.0 0.0 0.0 0.0
EMISFACT L0001894     HRDOW 0.0 0.0 0.0 0.0 0.0 0.0
EMISFACT L0001894     HRDOW 0.0 0.0 0.0 0.0 0.0 0.0
EMISFACT L0001894     HRDOW 0.0 0.0 0.0 0.0 0.0 0.0
EMISFACT L0001894     HRDOW 0.0 0.0 0.0 0.0 0.0 0.0
EMISFACT L0001895     HRDOW 0.0 0.0 0.0 0.0 0.0 0.0
EMISFACT L0001895     HRDOW 0.0 0.0 0.0 0.0 0.0 0.0
EMISFACT L0001895     HRDOW 0.0 0.0 0.0 0.0 0.0 0.0
EMISFACT L0001895     HRDOW 0.0 0.0 0.0 0.0 0.0 0.0
EMISFACT L0001896     HRDOW 0.0 0.0 0.0 0.0 0.0 0.0
EMISFACT L0001896     HRDOW 0.0 0.0 0.0 0.0 0.0 0.0
EMISFACT L0001896     HRDOW 0.0 0.0 0.0 0.0 0.0 0.0
EMISFACT L0001896     HRDOW 0.0 0.0 0.0 0.0 0.0 0.0
EMISFACT L0001897     HRDOW 0.0 0.0 0.0 0.0 0.0 0.0
EMISFACT L0001897     HRDOW 0.0 0.0 0.0 0.0 0.0 0.0
EMISFACT L0001897     HRDOW 0.0 0.0 0.0 0.0 0.0 0.0
EMISFACT L0001897     HRDOW 0.0 0.0 0.0 0.0 0.0 0.0
EMISFACT L0001898     HRDOW 0.0 0.0 0.0 0.0 0.0 0.0
EMISFACT L0001898     HRDOW 0.0 0.0 0.0 0.0 0.0 0.0
EMISFACT L0001898     HRDOW 0.0 0.0 0.0 0.0 0.0 0.0
EMISFACT L0001898     HRDOW 0.0 0.0 0.0 0.0 0.0 0.0
EMISFACT L0001899     HRDOW 0.0 0.0 0.0 0.0 0.0 0.0
EMISFACT L0001899     HRDOW 0.0 0.0 0.0 0.0 0.0 0.0
```

```
EMISFACT L0001899     HRDOW 0.0 0.0 0.0 0.0 0.0 0.0
EMISFACT L0001899     HRDOW 0.0 0.0 0.0 0.0 0.0 0.0
EMISFACT L0001900     HRDOW 0.0 0.0 0.0 0.0 0.0 0.0
EMISFACT L0001900     HRDOW 0.0 0.0 0.0 0.0 0.0 0.0
EMISFACT L0001900     HRDOW 0.0 0.0 0.0 0.0 0.0 0.0
EMISFACT L0001900     HRDOW 0.0 0.0 0.0 0.0 0.0 0.0
EMISFACT L0001901     HRDOW 0.0 0.0 0.0 0.0 0.0 0.0
EMISFACT L0001901     HRDOW 0.0 0.0 0.0 0.0 0.0 0.0
EMISFACT L0001901     HRDOW 0.0 0.0 0.0 0.0 0.0 0.0
EMISFACT L0001901     HRDOW 0.0 0.0 0.0 0.0 0.0 0.0
EMISFACT L0001902     HRDOW 0.0 0.0 0.0 0.0 0.0 0.0
EMISFACT L0001902     HRDOW 0.0 0.0 0.0 0.0 0.0 0.0
EMISFACT L0001902     HRDOW 0.0 0.0 0.0 0.0 0.0 0.0
EMISFACT L0001902     HRDOW 0.0 0.0 0.0 0.0 0.0 0.0
EMISFACT L0001903     HRDOW 0.0 0.0 0.0 0.0 0.0 0.0
EMISFACT L0001903     HRDOW 0.0 0.0 0.0 0.0 0.0 0.0
EMISFACT L0001903     HRDOW 0.0 0.0 0.0 0.0 0.0 0.0
EMISFACT L0001903     HRDOW 0.0 0.0 0.0 0.0 0.0 0.0
EMISFACT L0001904     HRDOW 0.0 0.0 0.0 0.0 0.0 0.0
EMISFACT L0001904     HRDOW 0.0 0.0 0.0 0.0 0.0 0.0
EMISFACT L0001904     HRDOW 0.0 0.0 0.0 0.0 0.0 0.0
EMISFACT L0001904     HRDOW 0.0 0.0 0.0 0.0 0.0 0.0
EMISFACT L0001905     HRDOW 0.0 0.0 0.0 0.0 0.0 0.0
EMISFACT L0001905     HRDOW 0.0 0.0 0.0 0.0 0.0 0.0
EMISFACT L0001905     HRDOW 0.0 0.0 0.0 0.0 0.0 0.0
EMISFACT L0001905     HRDOW 0.0 0.0 0.0 0.0 0.0 0.0
EMISFACT L0001906     HRDOW 0.0 0.0 0.0 0.0 0.0 0.0
EMISFACT L0001906     HRDOW 0.0 0.0 0.0 0.0 0.0 0.0
EMISFACT L0001906     HRDOW 0.0 0.0 0.0 0.0 0.0 0.0
EMISFACT L0001906     HRDOW 0.0 0.0 0.0 0.0 0.0 0.0
EMISFACT L0001907     HRDOW 0.0 0.0 0.0 0.0 0.0 0.0
EMISFACT L0001907     HRDOW 0.0 0.0 0.0 0.0 0.0 0.0
EMISFACT L0001907     HRDOW 0.0 0.0 0.0 0.0 0.0 0.0
EMISFACT L0001907     HRDOW 0.0 0.0 0.0 0.0 0.0 0.0
EMISFACT L0001908     HRDOW 0.0 0.0 0.0 0.0 0.0 0.0
EMISFACT L0001908     HRDOW 0.0 0.0 0.0 0.0 0.0 0.0
EMISFACT L0001908     HRDOW 0.0 0.0 0.0 0.0 0.0 0.0
EMISFACT L0001908     HRDOW 0.0 0.0 0.0 0.0 0.0 0.0
EMISFACT L0001909     HRDOW 0.0 0.0 0.0 0.0 0.0 0.0
EMISFACT L0001909     HRDOW 0.0 0.0 0.0 0.0 0.0 0.0
EMISFACT L0001909     HRDOW 0.0 0.0 0.0 0.0 0.0 0.0
EMISFACT L0001909     HRDOW 0.0 0.0 0.0 0.0 0.0 0.0
EMISFACT L0001910     HRDOW 0.0 0.0 0.0 0.0 0.0 0.0
EMISFACT L0001910     HRDOW 0.0 0.0 0.0 0.0 0.0 0.0
EMISFACT L0001910     HRDOW 0.0 0.0 0.0 0.0 0.0 0.0
EMISFACT L0001910     HRDOW 0.0 0.0 0.0 0.0 0.0 0.0
EMISFACT L0001911     HRDOW 0.0 0.0 0.0 0.0 0.0 0.0
EMISFACT L0001911     HRDOW 0.0 0.0 0.0 0.0 0.0 0.0
EMISFACT L0001911     HRDOW 0.0 0.0 0.0 0.0 0.0 0.0
EMISFACT L0001911     HRDOW 0.0 0.0 0.0 0.0 0.0 0.0
EMISFACT L0001912     HRDOW 0.0 0.0 0.0 0.0 0.0 0.0
EMISFACT L0001912     HRDOW 0.0 0.0 0.0 0.0 0.0 0.0
EMISFACT L0001912     HRDOW 0.0 0.0 0.0 0.0 0.0 0.0
EMISFACT L0001912     HRDOW 0.0 0.0 0.0 0.0 0.0 0.0
EMISFACT L0001913     HRDOW 0.0 0.0 0.0 0.0 0.0 0.0
EMISFACT L0001913     HRDOW 0.0 0.0 0.0 0.0 0.0 0.0
EMISFACT L0001913     HRDOW 0.0 0.0 0.0 0.0 0.0 0.0
EMISFACT L0001913     HRDOW 0.0 0.0 0.0 0.0 0.0 0.0
EMISFACT L0001914     HRDOW 0.0 0.0 0.0 0.0 0.0 0.0
```

```
EMISFACT L0001914     HRDOW 0.0 0.0 0.0 0.0 0.0 0.0
EMISFACT L0001914     HRDOW 0.0 0.0 0.0 0.0 0.0 0.0
EMISFACT L0001914     HRDOW 0.0 0.0 0.0 0.0 0.0 0.0
EMISFACT L0001915     HRDOW 0.0 0.0 0.0 0.0 0.0 0.0
EMISFACT L0001915     HRDOW 0.0 0.0 0.0 0.0 0.0 0.0
EMISFACT L0001915     HRDOW 0.0 0.0 0.0 0.0 0.0 0.0
EMISFACT L0001915     HRDOW 0.0 0.0 0.0 0.0 0.0 0.0
EMISFACT L0001916     HRDOW 0.0 0.0 0.0 0.0 0.0 0.0
EMISFACT L0001916     HRDOW 0.0 0.0 0.0 0.0 0.0 0.0
EMISFACT L0001916     HRDOW 0.0 0.0 0.0 0.0 0.0 0.0
EMISFACT L0001916     HRDOW 0.0 0.0 0.0 0.0 0.0 0.0
EMISFACT L0001917     HRDOW 0.0 0.0 0.0 0.0 0.0 0.0
EMISFACT L0001917     HRDOW 0.0 0.0 0.0 0.0 0.0 0.0
EMISFACT L0001917     HRDOW 0.0 0.0 0.0 0.0 0.0 0.0
EMISFACT L0001917     HRDOW 0.0 0.0 0.0 0.0 0.0 0.0
EMISFACT L0001918     HRDOW 0.0 0.0 0.0 0.0 0.0 0.0
EMISFACT L0001918     HRDOW 0.0 0.0 0.0 0.0 0.0 0.0
EMISFACT L0001918     HRDOW 0.0 0.0 0.0 0.0 0.0 0.0
EMISFACT L0001918     HRDOW 0.0 0.0 0.0 0.0 0.0 0.0
EMISFACT L0001919     HRDOW 0.0 0.0 0.0 0.0 0.0 0.0
EMISFACT L0001919     HRDOW 0.0 0.0 0.0 0.0 0.0 0.0
EMISFACT L0001919     HRDOW 0.0 0.0 0.0 0.0 0.0 0.0
EMISFACT L0001919     HRDOW 0.0 0.0 0.0 0.0 0.0 0.0
EMISFACT L0001920     HRDOW 0.0 0.0 0.0 0.0 0.0 0.0
EMISFACT L0001920     HRDOW 0.0 0.0 0.0 0.0 0.0 0.0
EMISFACT L0001920     HRDOW 0.0 0.0 0.0 0.0 0.0 0.0
EMISFACT L0001920     HRDOW 0.0 0.0 0.0 0.0 0.0 0.0
EMISFACT L0001921     HRDOW 0.0 0.0 0.0 0.0 0.0 0.0
EMISFACT L0001921     HRDOW 0.0 0.0 0.0 0.0 0.0 0.0
EMISFACT L0001921     HRDOW 0.0 0.0 0.0 0.0 0.0 0.0
EMISFACT L0001921     HRDOW 0.0 0.0 0.0 0.0 0.0 0.0
EMISFACT L0001922     HRDOW 0.0 0.0 0.0 0.0 0.0 0.0
EMISFACT L0001922     HRDOW 0.0 0.0 0.0 0.0 0.0 0.0
EMISFACT L0001922     HRDOW 0.0 0.0 0.0 0.0 0.0 0.0
EMISFACT L0001922     HRDOW 0.0 0.0 0.0 0.0 0.0 0.0
EMISFACT L0001923     HRDOW 0.0 0.0 0.0 0.0 0.0 0.0
EMISFACT L0001923     HRDOW 0.0 0.0 0.0 0.0 0.0 0.0
EMISFACT L0001923     HRDOW 0.0 0.0 0.0 0.0 0.0 0.0
EMISFACT L0001923     HRDOW 0.0 0.0 0.0 0.0 0.0 0.0
EMISFACT L0001924     HRDOW 0.0 0.0 0.0 0.0 0.0 0.0
EMISFACT L0001924     HRDOW 0.0 0.0 0.0 0.0 0.0 0.0
EMISFACT L0001924     HRDOW 0.0 0.0 0.0 0.0 0.0 0.0
EMISFACT L0001924     HRDOW 0.0 0.0 0.0 0.0 0.0 0.0
EMISFACT L0001925     HRDOW 0.0 0.0 0.0 0.0 0.0 0.0
EMISFACT L0001925     HRDOW 0.0 0.0 0.0 0.0 0.0 0.0
EMISFACT L0001925     HRDOW 0.0 0.0 0.0 0.0 0.0 0.0
EMISFACT L0001925     HRDOW 0.0 0.0 0.0 0.0 0.0 0.0
EMISFACT L0001926     HRDOW 0.0 0.0 0.0 0.0 0.0 0.0
EMISFACT L0001926     HRDOW 0.0 0.0 0.0 0.0 0.0 0.0
EMISFACT L0001926     HRDOW 0.0 0.0 0.0 0.0 0.0 0.0
EMISFACT L0001926     HRDOW 0.0 0.0 0.0 0.0 0.0 0.0
EMISFACT L0001927     HRDOW 0.0 0.0 0.0 0.0 0.0 0.0
EMISFACT L0001927     HRDOW 0.0 0.0 0.0 0.0 0.0 0.0
EMISFACT L0001927     HRDOW 0.0 0.0 0.0 0.0 0.0 0.0
EMISFACT L0001927     HRDOW 0.0 0.0 0.0 0.0 0.0 0.0
EMISFACT L0001928     HRDOW 0.0 0.0 0.0 0.0 0.0 0.0
EMISFACT L0001928     HRDOW 0.0 0.0 0.0 0.0 0.0 0.0
EMISFACT L0001928     HRDOW 0.0 0.0 0.0 0.0 0.0 0.0
EMISFACT L0001928     HRDOW 0.0 0.0 0.0 0.0 0.0 0.0
```

```
EMISFACT L0001929     HRDOW 0.0 0.0 0.0 0.0 0.0 0.0
EMISFACT L0001929     HRDOW 0.0 0.0 0.0 0.0 0.0 0.0
EMISFACT L0001929     HRDOW 0.0 0.0 0.0 0.0 0.0 0.0
EMISFACT L0001929     HRDOW 0.0 0.0 0.0 0.0 0.0 0.0
EMISFACT L0001930     HRDOW 0.0 0.0 0.0 0.0 0.0 0.0
EMISFACT L0001930     HRDOW 0.0 0.0 0.0 0.0 0.0 0.0
EMISFACT L0001930     HRDOW 0.0 0.0 0.0 0.0 0.0 0.0
EMISFACT L0001930     HRDOW 0.0 0.0 0.0 0.0 0.0 0.0
EMISFACT L0001931     HRDOW 0.0 0.0 0.0 0.0 0.0 0.0
EMISFACT L0001931     HRDOW 0.0 0.0 0.0 0.0 0.0 0.0
EMISFACT L0001931     HRDOW 0.0 0.0 0.0 0.0 0.0 0.0
EMISFACT L0001931     HRDOW 0.0 0.0 0.0 0.0 0.0 0.0
EMISFACT L0001932     HRDOW 0.0 0.0 0.0 0.0 0.0 0.0
EMISFACT L0001932     HRDOW 0.0 0.0 0.0 0.0 0.0 0.0
EMISFACT L0001932     HRDOW 0.0 0.0 0.0 0.0 0.0 0.0
EMISFACT L0001932     HRDOW 0.0 0.0 0.0 0.0 0.0 0.0
EMISFACT L0001933     HRDOW 0.0 0.0 0.0 0.0 0.0 0.0
EMISFACT L0001933     HRDOW 0.0 0.0 0.0 0.0 0.0 0.0
EMISFACT L0001933     HRDOW 0.0 0.0 0.0 0.0 0.0 0.0
EMISFACT L0001933     HRDOW 0.0 0.0 0.0 0.0 0.0 0.0
EMISFACT L0001934     HRDOW 0.0 0.0 0.0 0.0 0.0 0.0
EMISFACT L0001934     HRDOW 0.0 0.0 0.0 0.0 0.0 0.0
EMISFACT L0001934     HRDOW 0.0 0.0 0.0 0.0 0.0 0.0
EMISFACT L0001934     HRDOW 0.0 0.0 0.0 0.0 0.0 0.0
EMISFACT L0001935     HRDOW 0.0 0.0 0.0 0.0 0.0 0.0
EMISFACT L0001935     HRDOW 0.0 0.0 0.0 0.0 0.0 0.0
EMISFACT L0001935     HRDOW 0.0 0.0 0.0 0.0 0.0 0.0
EMISFACT L0001935     HRDOW 0.0 0.0 0.0 0.0 0.0 0.0
EMISFACT L0001936     HRDOW 0.0 0.0 0.0 0.0 0.0 0.0
EMISFACT L0001936     HRDOW 0.0 0.0 0.0 0.0 0.0 0.0
EMISFACT L0001936     HRDOW 0.0 0.0 0.0 0.0 0.0 0.0
EMISFACT L0001936     HRDOW 0.0 0.0 0.0 0.0 0.0 0.0
EMISFACT L0001937     HRDOW 0.0 0.0 0.0 0.0 0.0 0.0
EMISFACT L0001937     HRDOW 0.0 0.0 0.0 0.0 0.0 0.0
EMISFACT L0001937     HRDOW 0.0 0.0 0.0 0.0 0.0 0.0
EMISFACT L0001937     HRDOW 0.0 0.0 0.0 0.0 0.0 0.0
EMISFACT L0001938     HRDOW 0.0 0.0 0.0 0.0 0.0 0.0
EMISFACT L0001938     HRDOW 0.0 0.0 0.0 0.0 0.0 0.0
EMISFACT L0001938     HRDOW 0.0 0.0 0.0 0.0 0.0 0.0
EMISFACT L0001938     HRDOW 0.0 0.0 0.0 0.0 0.0 0.0
EMISFACT L0001939     HRDOW 0.0 0.0 0.0 0.0 0.0 0.0
EMISFACT L0001939     HRDOW 0.0 0.0 0.0 0.0 0.0 0.0
EMISFACT L0001939     HRDOW 0.0 0.0 0.0 0.0 0.0 0.0
EMISFACT L0001939     HRDOW 0.0 0.0 0.0 0.0 0.0 0.0
EMISFACT L0001940     HRDOW 0.0 0.0 0.0 0.0 0.0 0.0
EMISFACT L0001940     HRDOW 0.0 0.0 0.0 0.0 0.0 0.0
EMISFACT L0001940     HRDOW 0.0 0.0 0.0 0.0 0.0 0.0
EMISFACT L0001940     HRDOW 0.0 0.0 0.0 0.0 0.0 0.0
EMISFACT L0001941     HRDOW 0.0 0.0 0.0 0.0 0.0 0.0
EMISFACT L0001941     HRDOW 0.0 0.0 0.0 0.0 0.0 0.0
EMISFACT L0001941     HRDOW 0.0 0.0 0.0 0.0 0.0 0.0
EMISFACT L0001941     HRDOW 0.0 0.0 0.0 0.0 0.0 0.0
EMISFACT L0001942     HRDOW 0.0 0.0 0.0 0.0 0.0 0.0
EMISFACT L0001942     HRDOW 0.0 0.0 0.0 0.0 0.0 0.0
EMISFACT L0001942     HRDOW 0.0 0.0 0.0 0.0 0.0 0.0
EMISFACT L0001942     HRDOW 0.0 0.0 0.0 0.0 0.0 0.0
EMISFACT L0001943     HRDOW 0.0 0.0 0.0 0.0 0.0 0.0
EMISFACT L0001943     HRDOW 0.0 0.0 0.0 0.0 0.0 0.0
EMISFACT L0001943     HRDOW 0.0 0.0 0.0 0.0 0.0 0.0
```

```
   EMISFACT L0001943     HRDOW 0.0 0.0 0.0 0.0 0.0 0.0
   EMISFACT L0001944     HRDOW 0.0 0.0 0.0 0.0 0.0 0.0
   EMISFACT L0001944     HRDOW 0.0 0.0 0.0 0.0 0.0 0.0
   EMISFACT L0001944     HRDOW 0.0 0.0 0.0 0.0 0.0 0.0
   EMISFACT L0001944     HRDOW 0.0 0.0 0.0 0.0 0.0 0.0
   EMISFACT L0001945     HRDOW 0.0 0.0 0.0 0.0 0.0 0.0
   EMISFACT L0001945     HRDOW 0.0 0.0 0.0 0.0 0.0 0.0
   EMISFACT L0001945     HRDOW 0.0 0.0 0.0 0.0 0.0 0.0
   EMISFACT L0001945     HRDOW 0.0 0.0 0.0 0.0 0.0 0.0
   EMISFACT L0001946     HRDOW 0.0 0.0 0.0 0.0 0.0 0.0
   EMISFACT L0001946     HRDOW 0.0 0.0 0.0 0.0 0.0 0.0
   EMISFACT L0001946     HRDOW 0.0 0.0 0.0 0.0 0.0 0.0
   EMISFACT L0001946     HRDOW 0.0 0.0 0.0 0.0 0.0 0.0
   EMISFACT L0001947     HRDOW 0.0 0.0 0.0 0.0 0.0 0.0
   EMISFACT L0001947     HRDOW 0.0 0.0 0.0 0.0 0.0 0.0
   EMISFACT L0001947     HRDOW 0.0 0.0 0.0 0.0 0.0 0.0
   EMISFACT L0001947     HRDOW 0.0 0.0 0.0 0.0 0.0 0.0
   EMISFACT L0001948     HRDOW 0.0 0.0 0.0 0.0 0.0 0.0
   EMISFACT L0001948     HRDOW 0.0 0.0 0.0 0.0 0.0 0.0
   EMISFACT L0001948     HRDOW 0.0 0.0 0.0 0.0 0.0 0.0
   EMISFACT L0001948     HRDOW 0.0 0.0 0.0 0.0 0.0 0.0
   EMISFACT L0001949     HRDOW 0.0 0.0 0.0 0.0 0.0 0.0
   EMISFACT L0001949     HRDOW 0.0 0.0 0.0 0.0 0.0 0.0
   EMISFACT L0001949     HRDOW 0.0 0.0 0.0 0.0 0.0 0.0
   EMISFACT L0001949     HRDOW 0.0 0.0 0.0 0.0 0.0 0.0
   EMISFACT L0001950     HRDOW 0.0 0.0 0.0 0.0 0.0 0.0
   EMISFACT L0001950     HRDOW 0.0 0.0 0.0 0.0 0.0 0.0
   EMISFACT L0001950     HRDOW 0.0 0.0 0.0 0.0 0.0 0.0
   EMISFACT L0001950     HRDOW 0.0 0.0 0.0 0.0 0.0 0.0
   EMISFACT L0001951     HRDOW 0.0 0.0 0.0 0.0 0.0 0.0
   EMISFACT L0001951     HRDOW 0.0 0.0 0.0 0.0 0.0 0.0
   EMISFACT L0001951     HRDOW 0.0 0.0 0.0 0.0 0.0 0.0
   EMISFACT L0001951     HRDOW 0.0 0.0 0.0 0.0 0.0 0.0
   EMISFACT L0001952     HRDOW 0.0 0.0 0.0 0.0 0.0 0.0
   EMISFACT L0001952     HRDOW 0.0 0.0 0.0 0.0 0.0 0.0
   EMISFACT L0001952     HRDOW 0.0 0.0 0.0 0.0 0.0 0.0
   EMISFACT L0001952     HRDOW 0.0 0.0 0.0 0.0 0.0 0.0
   EMISFACT L0001953     HRDOW 0.0 0.0 0.0 0.0 0.0 0.0
   EMISFACT L0001953     HRDOW 0.0 0.0 0.0 0.0 0.0 0.0
   EMISFACT L0001953     HRDOW 0.0 0.0 0.0 0.0 0.0 0.0
   EMISFACT L0001953     HRDOW 0.0 0.0 0.0 0.0 0.0 0.0
   EMISFACT L0001954     HRDOW 0.0 0.0 0.0 0.0 0.0 0.0
   EMISFACT L0001954     HRDOW 0.0 0.0 0.0 0.0 0.0 0.0
   EMISFACT L0001954     HRDOW 0.0 0.0 0.0 0.0 0.0 0.0
   EMISFACT L0001954     HRDOW 0.0 0.0 0.0 0.0 0.0 0.0
   EMISFACT L0001955     HRDOW 0.0 0.0 0.0 0.0 0.0 0.0
   EMISFACT L0001955     HRDOW 0.0 0.0 0.0 0.0 0.0 0.0
   EMISFACT L0001955     HRDOW 0.0 0.0 0.0 0.0 0.0 0.0
   EMISFACT L0001955     HRDOW 0.0 0.0 0.0 0.0 0.0 0.0
   EMISFACT L0001956     HRDOW 0.0 0.0 0.0 0.0 0.0 0.0
   EMISFACT L0001956     HRDOW 0.0 0.0 0.0 0.0 0.0 0.0
   EMISFACT L0001956     HRDOW 0.0 0.0 0.0 0.0 0.0 0.0
   EMISFACT L0001956     HRDOW 0.0 0.0 0.0 0.0 0.0 0.0
   EMISFACT L0001957     HRDOW 0.0 0.0 0.0 0.0 0.0 0.0
   EMISFACT L0001957     HRDOW 0.0 0.0 0.0 0.0 0.0 0.0
   EMISFACT L0001957     HRDOW 0.0 0.0 0.0 0.0 0.0 0.0
   EMISFACT L0001957     HRDOW 0.0 0.0 0.0 0.0 0.0 0.0
** WeekDays:
   EMISFACT L0001958     HRDOW 0.0 0.0 0.0 0.0 0.0 0.0
```

```
EMISFACT L0001958     HRDOW 1.0 1.0 1.0 1.0 1.0 1.0
EMISFACT L0001958     HRDOW 1.0 1.0 1.0 1.0 0.0 0.0
EMISFACT L0001958     HRDOW 0.0 0.0 0.0 0.0 0.0 0.0
EMISFACT L0001959     HRDOW 0.0 0.0 0.0 0.0 0.0 0.0
EMISFACT L0001959     HRDOW 1.0 1.0 1.0 1.0 1.0 1.0
EMISFACT L0001959     HRDOW 1.0 1.0 1.0 1.0 0.0 0.0
EMISFACT L0001959     HRDOW 0.0 0.0 0.0 0.0 0.0 0.0
EMISFACT L0001960     HRDOW 0.0 0.0 0.0 0.0 0.0 0.0
EMISFACT L0001960     HRDOW 1.0 1.0 1.0 1.0 1.0 1.0
EMISFACT L0001960     HRDOW 1.0 1.0 1.0 1.0 0.0 0.0
EMISFACT L0001960     HRDOW 0.0 0.0 0.0 0.0 0.0 0.0
EMISFACT L0001961     HRDOW 0.0 0.0 0.0 0.0 0.0 0.0
EMISFACT L0001961     HRDOW 1.0 1.0 1.0 1.0 1.0 1.0
EMISFACT L0001961     HRDOW 1.0 1.0 1.0 1.0 0.0 0.0
EMISFACT L0001961     HRDOW 0.0 0.0 0.0 0.0 0.0 0.0
EMISFACT L0001962     HRDOW 0.0 0.0 0.0 0.0 0.0 0.0
EMISFACT L0001962     HRDOW 1.0 1.0 1.0 1.0 1.0 1.0
EMISFACT L0001962     HRDOW 1.0 1.0 1.0 1.0 0.0 0.0
EMISFACT L0001962     HRDOW 0.0 0.0 0.0 0.0 0.0 0.0
EMISFACT L0001963     HRDOW 0.0 0.0 0.0 0.0 0.0 0.0
EMISFACT L0001963     HRDOW 1.0 1.0 1.0 1.0 1.0 1.0
EMISFACT L0001963     HRDOW 1.0 1.0 1.0 1.0 0.0 0.0
EMISFACT L0001963     HRDOW 0.0 0.0 0.0 0.0 0.0 0.0
EMISFACT L0001964     HRDOW 0.0 0.0 0.0 0.0 0.0 0.0
EMISFACT L0001964     HRDOW 1.0 1.0 1.0 1.0 1.0 1.0
EMISFACT L0001964     HRDOW 1.0 1.0 1.0 1.0 0.0 0.0
EMISFACT L0001964     HRDOW 0.0 0.0 0.0 0.0 0.0 0.0
EMISFACT L0001965     HRDOW 0.0 0.0 0.0 0.0 0.0 0.0
EMISFACT L0001965     HRDOW 1.0 1.0 1.0 1.0 1.0 1.0
EMISFACT L0001965     HRDOW 1.0 1.0 1.0 1.0 0.0 0.0
EMISFACT L0001965     HRDOW 0.0 0.0 0.0 0.0 0.0 0.0
EMISFACT L0001966     HRDOW 0.0 0.0 0.0 0.0 0.0 0.0
EMISFACT L0001966     HRDOW 1.0 1.0 1.0 1.0 1.0 1.0
EMISFACT L0001966     HRDOW 1.0 1.0 1.0 1.0 0.0 0.0
EMISFACT L0001966     HRDOW 0.0 0.0 0.0 0.0 0.0 0.0
EMISFACT L0001967     HRDOW 0.0 0.0 0.0 0.0 0.0 0.0
EMISFACT L0001967     HRDOW 1.0 1.0 1.0 1.0 1.0 1.0
EMISFACT L0001967     HRDOW 1.0 1.0 1.0 1.0 0.0 0.0
EMISFACT L0001967     HRDOW 0.0 0.0 0.0 0.0 0.0 0.0
EMISFACT L0001968     HRDOW 0.0 0.0 0.0 0.0 0.0 0.0
EMISFACT L0001968     HRDOW 1.0 1.0 1.0 1.0 1.0 1.0
EMISFACT L0001968     HRDOW 1.0 1.0 1.0 1.0 0.0 0.0
EMISFACT L0001968     HRDOW 0.0 0.0 0.0 0.0 0.0 0.0
EMISFACT L0001969     HRDOW 0.0 0.0 0.0 0.0 0.0 0.0
EMISFACT L0001969     HRDOW 1.0 1.0 1.0 1.0 1.0 1.0
EMISFACT L0001969     HRDOW 1.0 1.0 1.0 1.0 0.0 0.0
EMISFACT L0001969     HRDOW 0.0 0.0 0.0 0.0 0.0 0.0
EMISFACT L0001970     HRDOW 0.0 0.0 0.0 0.0 0.0 0.0
EMISFACT L0001970     HRDOW 1.0 1.0 1.0 1.0 1.0 1.0
EMISFACT L0001970     HRDOW 1.0 1.0 1.0 1.0 0.0 0.0
EMISFACT L0001970     HRDOW 0.0 0.0 0.0 0.0 0.0 0.0
EMISFACT L0001971     HRDOW 0.0 0.0 0.0 0.0 0.0 0.0
EMISFACT L0001971     HRDOW 1.0 1.0 1.0 1.0 1.0 1.0
EMISFACT L0001971     HRDOW 1.0 1.0 1.0 1.0 0.0 0.0
EMISFACT L0001971     HRDOW 0.0 0.0 0.0 0.0 0.0 0.0
EMISFACT L0001972     HRDOW 0.0 0.0 0.0 0.0 0.0 0.0
EMISFACT L0001972     HRDOW 1.0 1.0 1.0 1.0 1.0 1.0
EMISFACT L0001972     HRDOW 1.0 1.0 1.0 1.0 0.0 0.0
EMISFACT L0001972     HRDOW 0.0 0.0 0.0 0.0 0.0 0.0
```

```
EMISFACT L0001973     HRDOW 0.0 0.0 0.0 0.0 0.0 0.0
EMISFACT L0001973     HRDOW 1.0 1.0 1.0 1.0 1.0 1.0
EMISFACT L0001973     HRDOW 1.0 1.0 1.0 1.0 0.0 0.0
EMISFACT L0001973     HRDOW 0.0 0.0 0.0 0.0 0.0 0.0
EMISFACT L0001974     HRDOW 0.0 0.0 0.0 0.0 0.0 0.0
EMISFACT L0001974     HRDOW 1.0 1.0 1.0 1.0 1.0 1.0
EMISFACT L0001974     HRDOW 1.0 1.0 1.0 1.0 0.0 0.0
EMISFACT L0001974     HRDOW 0.0 0.0 0.0 0.0 0.0 0.0
EMISFACT L0001975     HRDOW 0.0 0.0 0.0 0.0 0.0 0.0
EMISFACT L0001975     HRDOW 1.0 1.0 1.0 1.0 1.0 1.0
EMISFACT L0001975     HRDOW 1.0 1.0 1.0 1.0 0.0 0.0
EMISFACT L0001975     HRDOW 0.0 0.0 0.0 0.0 0.0 0.0
EMISFACT L0001976     HRDOW 0.0 0.0 0.0 0.0 0.0 0.0
EMISFACT L0001976     HRDOW 1.0 1.0 1.0 1.0 1.0 1.0
EMISFACT L0001976     HRDOW 1.0 1.0 1.0 1.0 0.0 0.0
EMISFACT L0001976     HRDOW 0.0 0.0 0.0 0.0 0.0 0.0
EMISFACT L0001977     HRDOW 0.0 0.0 0.0 0.0 0.0 0.0
EMISFACT L0001977     HRDOW 1.0 1.0 1.0 1.0 1.0 1.0
EMISFACT L0001977     HRDOW 1.0 1.0 1.0 1.0 0.0 0.0
EMISFACT L0001977     HRDOW 0.0 0.0 0.0 0.0 0.0 0.0
EMISFACT L0001978     HRDOW 0.0 0.0 0.0 0.0 0.0 0.0
EMISFACT L0001978     HRDOW 1.0 1.0 1.0 1.0 1.0 1.0
EMISFACT L0001978     HRDOW 1.0 1.0 1.0 1.0 0.0 0.0
EMISFACT L0001978     HRDOW 0.0 0.0 0.0 0.0 0.0 0.0
EMISFACT L0001979     HRDOW 0.0 0.0 0.0 0.0 0.0 0.0
EMISFACT L0001979     HRDOW 1.0 1.0 1.0 1.0 1.0 1.0
EMISFACT L0001979     HRDOW 1.0 1.0 1.0 1.0 0.0 0.0
EMISFACT L0001979     HRDOW 0.0 0.0 0.0 0.0 0.0 0.0
EMISFACT L0001980     HRDOW 0.0 0.0 0.0 0.0 0.0 0.0
EMISFACT L0001980     HRDOW 1.0 1.0 1.0 1.0 1.0 1.0
EMISFACT L0001980     HRDOW 1.0 1.0 1.0 1.0 0.0 0.0
EMISFACT L0001980     HRDOW 0.0 0.0 0.0 0.0 0.0 0.0
EMISFACT L0001981     HRDOW 0.0 0.0 0.0 0.0 0.0 0.0
EMISFACT L0001981     HRDOW 1.0 1.0 1.0 1.0 1.0 1.0
EMISFACT L0001981     HRDOW 1.0 1.0 1.0 1.0 0.0 0.0
EMISFACT L0001981     HRDOW 0.0 0.0 0.0 0.0 0.0 0.0
EMISFACT L0001982     HRDOW 0.0 0.0 0.0 0.0 0.0 0.0
EMISFACT L0001982     HRDOW 1.0 1.0 1.0 1.0 1.0 1.0
EMISFACT L0001982     HRDOW 1.0 1.0 1.0 1.0 0.0 0.0
EMISFACT L0001982     HRDOW 0.0 0.0 0.0 0.0 0.0 0.0
EMISFACT L0001983     HRDOW 0.0 0.0 0.0 0.0 0.0 0.0
EMISFACT L0001983     HRDOW 1.0 1.0 1.0 1.0 1.0 1.0
EMISFACT L0001983     HRDOW 1.0 1.0 1.0 1.0 0.0 0.0
EMISFACT L0001983     HRDOW 0.0 0.0 0.0 0.0 0.0 0.0
EMISFACT L0001984     HRDOW 0.0 0.0 0.0 0.0 0.0 0.0
EMISFACT L0001984     HRDOW 1.0 1.0 1.0 1.0 1.0 1.0
EMISFACT L0001984     HRDOW 1.0 1.0 1.0 1.0 0.0 0.0
EMISFACT L0001984     HRDOW 0.0 0.0 0.0 0.0 0.0 0.0
EMISFACT L0001985     HRDOW 0.0 0.0 0.0 0.0 0.0 0.0
EMISFACT L0001985     HRDOW 1.0 1.0 1.0 1.0 1.0 1.0
EMISFACT L0001985     HRDOW 1.0 1.0 1.0 1.0 0.0 0.0
EMISFACT L0001985     HRDOW 0.0 0.0 0.0 0.0 0.0 0.0
EMISFACT L0001986     HRDOW 0.0 0.0 0.0 0.0 0.0 0.0
EMISFACT L0001986     HRDOW 1.0 1.0 1.0 1.0 1.0 1.0
EMISFACT L0001986     HRDOW 1.0 1.0 1.0 1.0 0.0 0.0
EMISFACT L0001986     HRDOW 0.0 0.0 0.0 0.0 0.0 0.0
EMISFACT L0001987     HRDOW 0.0 0.0 0.0 0.0 0.0 0.0
EMISFACT L0001987     HRDOW 1.0 1.0 1.0 1.0 1.0 1.0
EMISFACT L0001987     HRDOW 1.0 1.0 1.0 1.0 0.0 0.0
```

```
EMISFACT L0001987     HRDOW 0.0 0.0 0.0 0.0 0.0 0.0
EMISFACT L0001988     HRDOW 0.0 0.0 0.0 0.0 0.0 0.0
EMISFACT L0001988     HRDOW 1.0 1.0 1.0 1.0 1.0 1.0
EMISFACT L0001988     HRDOW 1.0 1.0 1.0 1.0 0.0 0.0
EMISFACT L0001988     HRDOW 0.0 0.0 0.0 0.0 0.0 0.0
EMISFACT L0001989     HRDOW 0.0 0.0 0.0 0.0 0.0 0.0
EMISFACT L0001989     HRDOW 1.0 1.0 1.0 1.0 1.0 1.0
EMISFACT L0001989     HRDOW 1.0 1.0 1.0 1.0 0.0 0.0
EMISFACT L0001989     HRDOW 0.0 0.0 0.0 0.0 0.0 0.0
EMISFACT L0001990     HRDOW 0.0 0.0 0.0 0.0 0.0 0.0
EMISFACT L0001990     HRDOW 1.0 1.0 1.0 1.0 1.0 1.0
EMISFACT L0001990     HRDOW 1.0 1.0 1.0 1.0 0.0 0.0
EMISFACT L0001990     HRDOW 0.0 0.0 0.0 0.0 0.0 0.0
EMISFACT L0001991     HRDOW 0.0 0.0 0.0 0.0 0.0 0.0
EMISFACT L0001991     HRDOW 1.0 1.0 1.0 1.0 1.0 1.0
EMISFACT L0001991     HRDOW 1.0 1.0 1.0 1.0 0.0 0.0
EMISFACT L0001991     HRDOW 0.0 0.0 0.0 0.0 0.0 0.0
EMISFACT L0001992     HRDOW 0.0 0.0 0.0 0.0 0.0 0.0
EMISFACT L0001992     HRDOW 1.0 1.0 1.0 1.0 1.0 1.0
EMISFACT L0001992     HRDOW 1.0 1.0 1.0 1.0 0.0 0.0
EMISFACT L0001992     HRDOW 0.0 0.0 0.0 0.0 0.0 0.0
EMISFACT L0001993     HRDOW 0.0 0.0 0.0 0.0 0.0 0.0
EMISFACT L0001993     HRDOW 1.0 1.0 1.0 1.0 1.0 1.0
EMISFACT L0001993     HRDOW 1.0 1.0 1.0 1.0 0.0 0.0
EMISFACT L0001993     HRDOW 0.0 0.0 0.0 0.0 0.0 0.0
EMISFACT L0001994     HRDOW 0.0 0.0 0.0 0.0 0.0 0.0
EMISFACT L0001994     HRDOW 1.0 1.0 1.0 1.0 1.0 1.0
EMISFACT L0001994     HRDOW 1.0 1.0 1.0 1.0 0.0 0.0
EMISFACT L0001994     HRDOW 0.0 0.0 0.0 0.0 0.0 0.0
EMISFACT L0001995     HRDOW 0.0 0.0 0.0 0.0 0.0 0.0
EMISFACT L0001995     HRDOW 1.0 1.0 1.0 1.0 1.0 1.0
EMISFACT L0001995     HRDOW 1.0 1.0 1.0 1.0 0.0 0.0
EMISFACT L0001995     HRDOW 0.0 0.0 0.0 0.0 0.0 0.0
EMISFACT L0001996     HRDOW 0.0 0.0 0.0 0.0 0.0 0.0
EMISFACT L0001996     HRDOW 1.0 1.0 1.0 1.0 1.0 1.0
EMISFACT L0001996     HRDOW 1.0 1.0 1.0 1.0 0.0 0.0
EMISFACT L0001996     HRDOW 0.0 0.0 0.0 0.0 0.0 0.0
EMISFACT L0001997     HRDOW 0.0 0.0 0.0 0.0 0.0 0.0
EMISFACT L0001997     HRDOW 1.0 1.0 1.0 1.0 1.0 1.0
EMISFACT L0001997     HRDOW 1.0 1.0 1.0 1.0 0.0 0.0
EMISFACT L0001997     HRDOW 0.0 0.0 0.0 0.0 0.0 0.0
EMISFACT L0001998     HRDOW 0.0 0.0 0.0 0.0 0.0 0.0
EMISFACT L0001998     HRDOW 1.0 1.0 1.0 1.0 1.0 1.0
EMISFACT L0001998     HRDOW 1.0 1.0 1.0 1.0 0.0 0.0
EMISFACT L0001998     HRDOW 0.0 0.0 0.0 0.0 0.0 0.0
EMISFACT L0001999     HRDOW 0.0 0.0 0.0 0.0 0.0 0.0
EMISFACT L0001999     HRDOW 1.0 1.0 1.0 1.0 1.0 1.0
EMISFACT L0001999     HRDOW 1.0 1.0 1.0 1.0 0.0 0.0
EMISFACT L0001999     HRDOW 0.0 0.0 0.0 0.0 0.0 0.0
EMISFACT L0002000     HRDOW 0.0 0.0 0.0 0.0 0.0 0.0
EMISFACT L0002000     HRDOW 1.0 1.0 1.0 1.0 1.0 1.0
EMISFACT L0002000     HRDOW 1.0 1.0 1.0 1.0 0.0 0.0
EMISFACT L0002000     HRDOW 0.0 0.0 0.0 0.0 0.0 0.0
EMISFACT L0002001     HRDOW 0.0 0.0 0.0 0.0 0.0 0.0
EMISFACT L0002001     HRDOW 1.0 1.0 1.0 1.0 1.0 1.0
EMISFACT L0002001     HRDOW 1.0 1.0 1.0 1.0 0.0 0.0
EMISFACT L0002001     HRDOW 0.0 0.0 0.0 0.0 0.0 0.0
EMISFACT L0002002     HRDOW 0.0 0.0 0.0 0.0 0.0 0.0
EMISFACT L0002002     HRDOW 1.0 1.0 1.0 1.0 1.0 1.0
```

```
   EMISFACT L0002002     HRDOW 1.0 1.0 1.0 1.0 0.0 0.0
   EMISFACT L0002002     HRDOW 0.0 0.0 0.0 0.0 0.0 0.0
   EMISFACT L0002003     HRDOW 0.0 0.0 0.0 0.0 0.0 0.0
   EMISFACT L0002003     HRDOW 1.0 1.0 1.0 1.0 1.0 1.0
   EMISFACT L0002003     HRDOW 1.0 1.0 1.0 1.0 0.0 0.0
   EMISFACT L0002003     HRDOW 0.0 0.0 0.0 0.0 0.0 0.0
   EMISFACT L0002004     HRDOW 0.0 0.0 0.0 0.0 0.0 0.0
   EMISFACT L0002004     HRDOW 1.0 1.0 1.0 1.0 1.0 1.0
   EMISFACT L0002004     HRDOW 1.0 1.0 1.0 1.0 0.0 0.0
   EMISFACT L0002004     HRDOW 0.0 0.0 0.0 0.0 0.0 0.0
   EMISFACT L0002005     HRDOW 0.0 0.0 0.0 0.0 0.0 0.0
   EMISFACT L0002005     HRDOW 1.0 1.0 1.0 1.0 1.0 1.0
   EMISFACT L0002005     HRDOW 1.0 1.0 1.0 1.0 0.0 0.0
   EMISFACT L0002005     HRDOW 0.0 0.0 0.0 0.0 0.0 0.0
   EMISFACT L0002006     HRDOW 0.0 0.0 0.0 0.0 0.0 0.0
   EMISFACT L0002006     HRDOW 1.0 1.0 1.0 1.0 1.0 1.0
   EMISFACT L0002006     HRDOW 1.0 1.0 1.0 1.0 0.0 0.0
   EMISFACT L0002006     HRDOW 0.0 0.0 0.0 0.0 0.0 0.0
   EMISFACT L0002007     HRDOW 0.0 0.0 0.0 0.0 0.0 0.0
   EMISFACT L0002007     HRDOW 1.0 1.0 1.0 1.0 1.0 1.0
   EMISFACT L0002007     HRDOW 1.0 1.0 1.0 1.0 0.0 0.0
   EMISFACT L0002007     HRDOW 0.0 0.0 0.0 0.0 0.0 0.0
   EMISFACT L0002008     HRDOW 0.0 0.0 0.0 0.0 0.0 0.0
   EMISFACT L0002008     HRDOW 1.0 1.0 1.0 1.0 1.0 1.0
   EMISFACT L0002008     HRDOW 1.0 1.0 1.0 1.0 0.0 0.0
   EMISFACT L0002008     HRDOW 0.0 0.0 0.0 0.0 0.0 0.0
   EMISFACT L0002009     HRDOW 0.0 0.0 0.0 0.0 0.0 0.0
   EMISFACT L0002009     HRDOW 1.0 1.0 1.0 1.0 1.0 1.0
   EMISFACT L0002009     HRDOW 1.0 1.0 1.0 1.0 0.0 0.0
   EMISFACT L0002009     HRDOW 0.0 0.0 0.0 0.0 0.0 0.0
   EMISFACT L0002010     HRDOW 0.0 0.0 0.0 0.0 0.0 0.0
   EMISFACT L0002010     HRDOW 1.0 1.0 1.0 1.0 1.0 1.0
   EMISFACT L0002010     HRDOW 1.0 1.0 1.0 1.0 0.0 0.0
   EMISFACT L0002010     HRDOW 0.0 0.0 0.0 0.0 0.0 0.0
   EMISFACT L0002011     HRDOW 0.0 0.0 0.0 0.0 0.0 0.0
   EMISFACT L0002011     HRDOW 1.0 1.0 1.0 1.0 1.0 1.0
   EMISFACT L0002011     HRDOW 1.0 1.0 1.0 1.0 0.0 0.0
   EMISFACT L0002011     HRDOW 0.0 0.0 0.0 0.0 0.0 0.0
   EMISFACT L0002012     HRDOW 0.0 0.0 0.0 0.0 0.0 0.0
   EMISFACT L0002012     HRDOW 1.0 1.0 1.0 1.0 1.0 1.0
   EMISFACT L0002012     HRDOW 1.0 1.0 1.0 1.0 0.0 0.0
   EMISFACT L0002012     HRDOW 0.0 0.0 0.0 0.0 0.0 0.0
   EMISFACT L0002013     HRDOW 0.0 0.0 0.0 0.0 0.0 0.0
   EMISFACT L0002013     HRDOW 1.0 1.0 1.0 1.0 1.0 1.0
   EMISFACT L0002013     HRDOW 1.0 1.0 1.0 1.0 0.0 0.0
   EMISFACT L0002013     HRDOW 0.0 0.0 0.0 0.0 0.0 0.0
   EMISFACT L0002014     HRDOW 0.0 0.0 0.0 0.0 0.0 0.0
   EMISFACT L0002014     HRDOW 1.0 1.0 1.0 1.0 1.0 1.0
   EMISFACT L0002014     HRDOW 1.0 1.0 1.0 1.0 0.0 0.0
   EMISFACT L0002014     HRDOW 0.0 0.0 0.0 0.0 0.0 0.0
   EMISFACT L0002015     HRDOW 0.0 0.0 0.0 0.0 0.0 0.0
   EMISFACT L0002015     HRDOW 1.0 1.0 1.0 1.0 1.0 1.0
   EMISFACT L0002015     HRDOW 1.0 1.0 1.0 1.0 0.0 0.0
   EMISFACT L0002015     HRDOW 0.0 0.0 0.0 0.0 0.0 0.0
   EMISFACT L0002016     HRDOW 0.0 0.0 0.0 0.0 0.0 0.0
   EMISFACT L0002016     HRDOW 1.0 1.0 1.0 1.0 1.0 1.0
   EMISFACT L0002016     HRDOW 1.0 1.0 1.0 1.0 0.0 0.0
   EMISFACT L0002016     HRDOW 0.0 0.0 0.0 0.0 0.0 0.0
** Saturday:
```

```
EMISFACT L0001958     HRDOW 0.0 0.0 0.0 0.0 0.0 0.0
EMISFACT L0001958     HRDOW 0.0 0.0 0.0 0.0 0.0 0.0
EMISFACT L0001958     HRDOW 0.0 0.0 0.0 0.0 0.0 0.0
EMISFACT L0001958     HRDOW 0.0 0.0 0.0 0.0 0.0 0.0
EMISFACT L0001959     HRDOW 0.0 0.0 0.0 0.0 0.0 0.0
EMISFACT L0001959     HRDOW 0.0 0.0 0.0 0.0 0.0 0.0
EMISFACT L0001959     HRDOW 0.0 0.0 0.0 0.0 0.0 0.0
EMISFACT L0001959     HRDOW 0.0 0.0 0.0 0.0 0.0 0.0
EMISFACT L0001960     HRDOW 0.0 0.0 0.0 0.0 0.0 0.0
EMISFACT L0001960     HRDOW 0.0 0.0 0.0 0.0 0.0 0.0
EMISFACT L0001960     HRDOW 0.0 0.0 0.0 0.0 0.0 0.0
EMISFACT L0001960     HRDOW 0.0 0.0 0.0 0.0 0.0 0.0
EMISFACT L0001961     HRDOW 0.0 0.0 0.0 0.0 0.0 0.0
EMISFACT L0001961     HRDOW 0.0 0.0 0.0 0.0 0.0 0.0
EMISFACT L0001961     HRDOW 0.0 0.0 0.0 0.0 0.0 0.0
EMISFACT L0001961     HRDOW 0.0 0.0 0.0 0.0 0.0 0.0
EMISFACT L0001962     HRDOW 0.0 0.0 0.0 0.0 0.0 0.0
EMISFACT L0001962     HRDOW 0.0 0.0 0.0 0.0 0.0 0.0
EMISFACT L0001962     HRDOW 0.0 0.0 0.0 0.0 0.0 0.0
EMISFACT L0001962     HRDOW 0.0 0.0 0.0 0.0 0.0 0.0
EMISFACT L0001963     HRDOW 0.0 0.0 0.0 0.0 0.0 0.0
EMISFACT L0001963     HRDOW 0.0 0.0 0.0 0.0 0.0 0.0
EMISFACT L0001963     HRDOW 0.0 0.0 0.0 0.0 0.0 0.0
EMISFACT L0001963     HRDOW 0.0 0.0 0.0 0.0 0.0 0.0
EMISFACT L0001964     HRDOW 0.0 0.0 0.0 0.0 0.0 0.0
EMISFACT L0001964     HRDOW 0.0 0.0 0.0 0.0 0.0 0.0
EMISFACT L0001964     HRDOW 0.0 0.0 0.0 0.0 0.0 0.0
EMISFACT L0001964     HRDOW 0.0 0.0 0.0 0.0 0.0 0.0
EMISFACT L0001965     HRDOW 0.0 0.0 0.0 0.0 0.0 0.0
EMISFACT L0001965     HRDOW 0.0 0.0 0.0 0.0 0.0 0.0
EMISFACT L0001965     HRDOW 0.0 0.0 0.0 0.0 0.0 0.0
EMISFACT L0001965     HRDOW 0.0 0.0 0.0 0.0 0.0 0.0
EMISFACT L0001966     HRDOW 0.0 0.0 0.0 0.0 0.0 0.0
EMISFACT L0001966     HRDOW 0.0 0.0 0.0 0.0 0.0 0.0
EMISFACT L0001966     HRDOW 0.0 0.0 0.0 0.0 0.0 0.0
EMISFACT L0001966     HRDOW 0.0 0.0 0.0 0.0 0.0 0.0
EMISFACT L0001967     HRDOW 0.0 0.0 0.0 0.0 0.0 0.0
EMISFACT L0001967     HRDOW 0.0 0.0 0.0 0.0 0.0 0.0
EMISFACT L0001967     HRDOW 0.0 0.0 0.0 0.0 0.0 0.0
EMISFACT L0001967     HRDOW 0.0 0.0 0.0 0.0 0.0 0.0
EMISFACT L0001968     HRDOW 0.0 0.0 0.0 0.0 0.0 0.0
EMISFACT L0001968     HRDOW 0.0 0.0 0.0 0.0 0.0 0.0
EMISFACT L0001968     HRDOW 0.0 0.0 0.0 0.0 0.0 0.0
EMISFACT L0001968     HRDOW 0.0 0.0 0.0 0.0 0.0 0.0
EMISFACT L0001969     HRDOW 0.0 0.0 0.0 0.0 0.0 0.0
EMISFACT L0001969     HRDOW 0.0 0.0 0.0 0.0 0.0 0.0
EMISFACT L0001969     HRDOW 0.0 0.0 0.0 0.0 0.0 0.0
EMISFACT L0001969     HRDOW 0.0 0.0 0.0 0.0 0.0 0.0
EMISFACT L0001970     HRDOW 0.0 0.0 0.0 0.0 0.0 0.0
EMISFACT L0001970     HRDOW 0.0 0.0 0.0 0.0 0.0 0.0
EMISFACT L0001970     HRDOW 0.0 0.0 0.0 0.0 0.0 0.0
EMISFACT L0001970     HRDOW 0.0 0.0 0.0 0.0 0.0 0.0
EMISFACT L0001971     HRDOW 0.0 0.0 0.0 0.0 0.0 0.0
EMISFACT L0001971     HRDOW 0.0 0.0 0.0 0.0 0.0 0.0
EMISFACT L0001971     HRDOW 0.0 0.0 0.0 0.0 0.0 0.0
EMISFACT L0001971     HRDOW 0.0 0.0 0.0 0.0 0.0 0.0
EMISFACT L0001972     HRDOW 0.0 0.0 0.0 0.0 0.0 0.0
EMISFACT L0001972     HRDOW 0.0 0.0 0.0 0.0 0.0 0.0
EMISFACT L0001972     HRDOW 0.0 0.0 0.0 0.0 0.0 0.0
```

```
EMISFACT L0001972     HRDOW 0.0 0.0 0.0 0.0 0.0 0.0
EMISFACT L0001973     HRDOW 0.0 0.0 0.0 0.0 0.0 0.0
EMISFACT L0001973     HRDOW 0.0 0.0 0.0 0.0 0.0 0.0
EMISFACT L0001973     HRDOW 0.0 0.0 0.0 0.0 0.0 0.0
EMISFACT L0001973     HRDOW 0.0 0.0 0.0 0.0 0.0 0.0
EMISFACT L0001974     HRDOW 0.0 0.0 0.0 0.0 0.0 0.0
EMISFACT L0001974     HRDOW 0.0 0.0 0.0 0.0 0.0 0.0
EMISFACT L0001974     HRDOW 0.0 0.0 0.0 0.0 0.0 0.0
EMISFACT L0001974     HRDOW 0.0 0.0 0.0 0.0 0.0 0.0
EMISFACT L0001975     HRDOW 0.0 0.0 0.0 0.0 0.0 0.0
EMISFACT L0001975     HRDOW 0.0 0.0 0.0 0.0 0.0 0.0
EMISFACT L0001975     HRDOW 0.0 0.0 0.0 0.0 0.0 0.0
EMISFACT L0001975     HRDOW 0.0 0.0 0.0 0.0 0.0 0.0
EMISFACT L0001976     HRDOW 0.0 0.0 0.0 0.0 0.0 0.0
EMISFACT L0001976     HRDOW 0.0 0.0 0.0 0.0 0.0 0.0
EMISFACT L0001976     HRDOW 0.0 0.0 0.0 0.0 0.0 0.0
EMISFACT L0001976     HRDOW 0.0 0.0 0.0 0.0 0.0 0.0
EMISFACT L0001977     HRDOW 0.0 0.0 0.0 0.0 0.0 0.0
EMISFACT L0001977     HRDOW 0.0 0.0 0.0 0.0 0.0 0.0
EMISFACT L0001977     HRDOW 0.0 0.0 0.0 0.0 0.0 0.0
EMISFACT L0001977     HRDOW 0.0 0.0 0.0 0.0 0.0 0.0
EMISFACT L0001978     HRDOW 0.0 0.0 0.0 0.0 0.0 0.0
EMISFACT L0001978     HRDOW 0.0 0.0 0.0 0.0 0.0 0.0
EMISFACT L0001978     HRDOW 0.0 0.0 0.0 0.0 0.0 0.0
EMISFACT L0001978     HRDOW 0.0 0.0 0.0 0.0 0.0 0.0
EMISFACT L0001979     HRDOW 0.0 0.0 0.0 0.0 0.0 0.0
EMISFACT L0001979     HRDOW 0.0 0.0 0.0 0.0 0.0 0.0
EMISFACT L0001979     HRDOW 0.0 0.0 0.0 0.0 0.0 0.0
EMISFACT L0001979     HRDOW 0.0 0.0 0.0 0.0 0.0 0.0
EMISFACT L0001980     HRDOW 0.0 0.0 0.0 0.0 0.0 0.0
EMISFACT L0001980     HRDOW 0.0 0.0 0.0 0.0 0.0 0.0
EMISFACT L0001980     HRDOW 0.0 0.0 0.0 0.0 0.0 0.0
EMISFACT L0001980     HRDOW 0.0 0.0 0.0 0.0 0.0 0.0
EMISFACT L0001981     HRDOW 0.0 0.0 0.0 0.0 0.0 0.0
EMISFACT L0001981     HRDOW 0.0 0.0 0.0 0.0 0.0 0.0
EMISFACT L0001981     HRDOW 0.0 0.0 0.0 0.0 0.0 0.0
EMISFACT L0001981     HRDOW 0.0 0.0 0.0 0.0 0.0 0.0
EMISFACT L0001982     HRDOW 0.0 0.0 0.0 0.0 0.0 0.0
EMISFACT L0001982     HRDOW 0.0 0.0 0.0 0.0 0.0 0.0
EMISFACT L0001982     HRDOW 0.0 0.0 0.0 0.0 0.0 0.0
EMISFACT L0001982     HRDOW 0.0 0.0 0.0 0.0 0.0 0.0
EMISFACT L0001983     HRDOW 0.0 0.0 0.0 0.0 0.0 0.0
EMISFACT L0001983     HRDOW 0.0 0.0 0.0 0.0 0.0 0.0
EMISFACT L0001983     HRDOW 0.0 0.0 0.0 0.0 0.0 0.0
EMISFACT L0001983     HRDOW 0.0 0.0 0.0 0.0 0.0 0.0
EMISFACT L0001984     HRDOW 0.0 0.0 0.0 0.0 0.0 0.0
EMISFACT L0001984     HRDOW 0.0 0.0 0.0 0.0 0.0 0.0
EMISFACT L0001984     HRDOW 0.0 0.0 0.0 0.0 0.0 0.0
EMISFACT L0001984     HRDOW 0.0 0.0 0.0 0.0 0.0 0.0
EMISFACT L0001985     HRDOW 0.0 0.0 0.0 0.0 0.0 0.0
EMISFACT L0001985     HRDOW 0.0 0.0 0.0 0.0 0.0 0.0
EMISFACT L0001985     HRDOW 0.0 0.0 0.0 0.0 0.0 0.0
EMISFACT L0001985     HRDOW 0.0 0.0 0.0 0.0 0.0 0.0
EMISFACT L0001986     HRDOW 0.0 0.0 0.0 0.0 0.0 0.0
EMISFACT L0001986     HRDOW 0.0 0.0 0.0 0.0 0.0 0.0
EMISFACT L0001986     HRDOW 0.0 0.0 0.0 0.0 0.0 0.0
EMISFACT L0001986     HRDOW 0.0 0.0 0.0 0.0 0.0 0.0
EMISFACT L0001987     HRDOW 0.0 0.0 0.0 0.0 0.0 0.0
EMISFACT L0001987     HRDOW 0.0 0.0 0.0 0.0 0.0 0.0
```

```
EMISFACT L0001987     HRDOW 0.0 0.0 0.0 0.0 0.0 0.0
EMISFACT L0001987     HRDOW 0.0 0.0 0.0 0.0 0.0 0.0
EMISFACT L0001988     HRDOW 0.0 0.0 0.0 0.0 0.0 0.0
EMISFACT L0001988     HRDOW 0.0 0.0 0.0 0.0 0.0 0.0
EMISFACT L0001988     HRDOW 0.0 0.0 0.0 0.0 0.0 0.0
EMISFACT L0001988     HRDOW 0.0 0.0 0.0 0.0 0.0 0.0
EMISFACT L0001989     HRDOW 0.0 0.0 0.0 0.0 0.0 0.0
EMISFACT L0001989     HRDOW 0.0 0.0 0.0 0.0 0.0 0.0
EMISFACT L0001989     HRDOW 0.0 0.0 0.0 0.0 0.0 0.0
EMISFACT L0001989     HRDOW 0.0 0.0 0.0 0.0 0.0 0.0
EMISFACT L0001990     HRDOW 0.0 0.0 0.0 0.0 0.0 0.0
EMISFACT L0001990     HRDOW 0.0 0.0 0.0 0.0 0.0 0.0
EMISFACT L0001990     HRDOW 0.0 0.0 0.0 0.0 0.0 0.0
EMISFACT L0001990     HRDOW 0.0 0.0 0.0 0.0 0.0 0.0
EMISFACT L0001991     HRDOW 0.0 0.0 0.0 0.0 0.0 0.0
EMISFACT L0001991     HRDOW 0.0 0.0 0.0 0.0 0.0 0.0
EMISFACT L0001991     HRDOW 0.0 0.0 0.0 0.0 0.0 0.0
EMISFACT L0001991     HRDOW 0.0 0.0 0.0 0.0 0.0 0.0
EMISFACT L0001992     HRDOW 0.0 0.0 0.0 0.0 0.0 0.0
EMISFACT L0001992     HRDOW 0.0 0.0 0.0 0.0 0.0 0.0
EMISFACT L0001992     HRDOW 0.0 0.0 0.0 0.0 0.0 0.0
EMISFACT L0001992     HRDOW 0.0 0.0 0.0 0.0 0.0 0.0
EMISFACT L0001993     HRDOW 0.0 0.0 0.0 0.0 0.0 0.0
EMISFACT L0001993     HRDOW 0.0 0.0 0.0 0.0 0.0 0.0
EMISFACT L0001993     HRDOW 0.0 0.0 0.0 0.0 0.0 0.0
EMISFACT L0001993     HRDOW 0.0 0.0 0.0 0.0 0.0 0.0
EMISFACT L0001994     HRDOW 0.0 0.0 0.0 0.0 0.0 0.0
EMISFACT L0001994     HRDOW 0.0 0.0 0.0 0.0 0.0 0.0
EMISFACT L0001994     HRDOW 0.0 0.0 0.0 0.0 0.0 0.0
EMISFACT L0001994     HRDOW 0.0 0.0 0.0 0.0 0.0 0.0
EMISFACT L0001995     HRDOW 0.0 0.0 0.0 0.0 0.0 0.0
EMISFACT L0001995     HRDOW 0.0 0.0 0.0 0.0 0.0 0.0
EMISFACT L0001995     HRDOW 0.0 0.0 0.0 0.0 0.0 0.0
EMISFACT L0001995     HRDOW 0.0 0.0 0.0 0.0 0.0 0.0
EMISFACT L0001996     HRDOW 0.0 0.0 0.0 0.0 0.0 0.0
EMISFACT L0001996     HRDOW 0.0 0.0 0.0 0.0 0.0 0.0
EMISFACT L0001996     HRDOW 0.0 0.0 0.0 0.0 0.0 0.0
EMISFACT L0001996     HRDOW 0.0 0.0 0.0 0.0 0.0 0.0
EMISFACT L0001997     HRDOW 0.0 0.0 0.0 0.0 0.0 0.0
EMISFACT L0001997     HRDOW 0.0 0.0 0.0 0.0 0.0 0.0
EMISFACT L0001997     HRDOW 0.0 0.0 0.0 0.0 0.0 0.0
EMISFACT L0001997     HRDOW 0.0 0.0 0.0 0.0 0.0 0.0
EMISFACT L0001998     HRDOW 0.0 0.0 0.0 0.0 0.0 0.0
EMISFACT L0001998     HRDOW 0.0 0.0 0.0 0.0 0.0 0.0
EMISFACT L0001998     HRDOW 0.0 0.0 0.0 0.0 0.0 0.0
EMISFACT L0001998     HRDOW 0.0 0.0 0.0 0.0 0.0 0.0
EMISFACT L0001999     HRDOW 0.0 0.0 0.0 0.0 0.0 0.0
EMISFACT L0001999     HRDOW 0.0 0.0 0.0 0.0 0.0 0.0
EMISFACT L0001999     HRDOW 0.0 0.0 0.0 0.0 0.0 0.0
EMISFACT L0001999     HRDOW 0.0 0.0 0.0 0.0 0.0 0.0
EMISFACT L0002000     HRDOW 0.0 0.0 0.0 0.0 0.0 0.0
EMISFACT L0002000     HRDOW 0.0 0.0 0.0 0.0 0.0 0.0
EMISFACT L0002000     HRDOW 0.0 0.0 0.0 0.0 0.0 0.0
EMISFACT L0002000     HRDOW 0.0 0.0 0.0 0.0 0.0 0.0
EMISFACT L0002001     HRDOW 0.0 0.0 0.0 0.0 0.0 0.0
EMISFACT L0002001     HRDOW 0.0 0.0 0.0 0.0 0.0 0.0
EMISFACT L0002001     HRDOW 0.0 0.0 0.0 0.0 0.0 0.0
EMISFACT L0002001     HRDOW 0.0 0.0 0.0 0.0 0.0 0.0
EMISFACT L0002002     HRDOW 0.0 0.0 0.0 0.0 0.0 0.0
```

```
EMISFACT L0002002     HRDOW 0.0 0.0 0.0 0.0 0.0 0.0
EMISFACT L0002002     HRDOW 0.0 0.0 0.0 0.0 0.0 0.0
EMISFACT L0002002     HRDOW 0.0 0.0 0.0 0.0 0.0 0.0
EMISFACT L0002003     HRDOW 0.0 0.0 0.0 0.0 0.0 0.0
EMISFACT L0002003     HRDOW 0.0 0.0 0.0 0.0 0.0 0.0
EMISFACT L0002003     HRDOW 0.0 0.0 0.0 0.0 0.0 0.0
EMISFACT L0002003     HRDOW 0.0 0.0 0.0 0.0 0.0 0.0
EMISFACT L0002004     HRDOW 0.0 0.0 0.0 0.0 0.0 0.0
EMISFACT L0002004     HRDOW 0.0 0.0 0.0 0.0 0.0 0.0
EMISFACT L0002004     HRDOW 0.0 0.0 0.0 0.0 0.0 0.0
EMISFACT L0002004     HRDOW 0.0 0.0 0.0 0.0 0.0 0.0
EMISFACT L0002005     HRDOW 0.0 0.0 0.0 0.0 0.0 0.0
EMISFACT L0002005     HRDOW 0.0 0.0 0.0 0.0 0.0 0.0
EMISFACT L0002005     HRDOW 0.0 0.0 0.0 0.0 0.0 0.0
EMISFACT L0002005     HRDOW 0.0 0.0 0.0 0.0 0.0 0.0
EMISFACT L0002006     HRDOW 0.0 0.0 0.0 0.0 0.0 0.0
EMISFACT L0002006     HRDOW 0.0 0.0 0.0 0.0 0.0 0.0
EMISFACT L0002006     HRDOW 0.0 0.0 0.0 0.0 0.0 0.0
EMISFACT L0002006     HRDOW 0.0 0.0 0.0 0.0 0.0 0.0
EMISFACT L0002007     HRDOW 0.0 0.0 0.0 0.0 0.0 0.0
EMISFACT L0002007     HRDOW 0.0 0.0 0.0 0.0 0.0 0.0
EMISFACT L0002007     HRDOW 0.0 0.0 0.0 0.0 0.0 0.0
EMISFACT L0002007     HRDOW 0.0 0.0 0.0 0.0 0.0 0.0
EMISFACT L0002008     HRDOW 0.0 0.0 0.0 0.0 0.0 0.0
EMISFACT L0002008     HRDOW 0.0 0.0 0.0 0.0 0.0 0.0
EMISFACT L0002008     HRDOW 0.0 0.0 0.0 0.0 0.0 0.0
EMISFACT L0002008     HRDOW 0.0 0.0 0.0 0.0 0.0 0.0
EMISFACT L0002009     HRDOW 0.0 0.0 0.0 0.0 0.0 0.0
EMISFACT L0002009     HRDOW 0.0 0.0 0.0 0.0 0.0 0.0
EMISFACT L0002009     HRDOW 0.0 0.0 0.0 0.0 0.0 0.0
EMISFACT L0002009     HRDOW 0.0 0.0 0.0 0.0 0.0 0.0
EMISFACT L0002010     HRDOW 0.0 0.0 0.0 0.0 0.0 0.0
EMISFACT L0002010     HRDOW 0.0 0.0 0.0 0.0 0.0 0.0
EMISFACT L0002010     HRDOW 0.0 0.0 0.0 0.0 0.0 0.0
EMISFACT L0002010     HRDOW 0.0 0.0 0.0 0.0 0.0 0.0
EMISFACT L0002011     HRDOW 0.0 0.0 0.0 0.0 0.0 0.0
EMISFACT L0002011     HRDOW 0.0 0.0 0.0 0.0 0.0 0.0
EMISFACT L0002011     HRDOW 0.0 0.0 0.0 0.0 0.0 0.0
EMISFACT L0002011     HRDOW 0.0 0.0 0.0 0.0 0.0 0.0
EMISFACT L0002012     HRDOW 0.0 0.0 0.0 0.0 0.0 0.0
EMISFACT L0002012     HRDOW 0.0 0.0 0.0 0.0 0.0 0.0
EMISFACT L0002012     HRDOW 0.0 0.0 0.0 0.0 0.0 0.0
EMISFACT L0002012     HRDOW 0.0 0.0 0.0 0.0 0.0 0.0
EMISFACT L0002013     HRDOW 0.0 0.0 0.0 0.0 0.0 0.0
EMISFACT L0002013     HRDOW 0.0 0.0 0.0 0.0 0.0 0.0
EMISFACT L0002013     HRDOW 0.0 0.0 0.0 0.0 0.0 0.0
EMISFACT L0002013     HRDOW 0.0 0.0 0.0 0.0 0.0 0.0
EMISFACT L0002014     HRDOW 0.0 0.0 0.0 0.0 0.0 0.0
EMISFACT L0002014     HRDOW 0.0 0.0 0.0 0.0 0.0 0.0
EMISFACT L0002014     HRDOW 0.0 0.0 0.0 0.0 0.0 0.0
EMISFACT L0002014     HRDOW 0.0 0.0 0.0 0.0 0.0 0.0
EMISFACT L0002015     HRDOW 0.0 0.0 0.0 0.0 0.0 0.0
EMISFACT L0002015     HRDOW 0.0 0.0 0.0 0.0 0.0 0.0
EMISFACT L0002015     HRDOW 0.0 0.0 0.0 0.0 0.0 0.0
EMISFACT L0002015     HRDOW 0.0 0.0 0.0 0.0 0.0 0.0
EMISFACT L0002016     HRDOW 0.0 0.0 0.0 0.0 0.0 0.0
EMISFACT L0002016     HRDOW 0.0 0.0 0.0 0.0 0.0 0.0
EMISFACT L0002016     HRDOW 0.0 0.0 0.0 0.0 0.0 0.0
EMISFACT L0002016     HRDOW 0.0 0.0 0.0 0.0 0.0 0.0
```

```
** Sunday:
   EMISFACT L0001958     HRDOW 0.0 0.0 0.0 0.0 0.0 0.0
   EMISFACT L0001958     HRDOW 0.0 0.0 0.0 0.0 0.0 0.0
   EMISFACT L0001958     HRDOW 0.0 0.0 0.0 0.0 0.0 0.0
   EMISFACT L0001958     HRDOW 0.0 0.0 0.0 0.0 0.0 0.0
   EMISFACT L0001959     HRDOW 0.0 0.0 0.0 0.0 0.0 0.0
   EMISFACT L0001959     HRDOW 0.0 0.0 0.0 0.0 0.0 0.0
   EMISFACT L0001959     HRDOW 0.0 0.0 0.0 0.0 0.0 0.0
   EMISFACT L0001959     HRDOW 0.0 0.0 0.0 0.0 0.0 0.0
   EMISFACT L0001960     HRDOW 0.0 0.0 0.0 0.0 0.0 0.0
   EMISFACT L0001960     HRDOW 0.0 0.0 0.0 0.0 0.0 0.0
   EMISFACT L0001960     HRDOW 0.0 0.0 0.0 0.0 0.0 0.0
   EMISFACT L0001960     HRDOW 0.0 0.0 0.0 0.0 0.0 0.0
   EMISFACT L0001961     HRDOW 0.0 0.0 0.0 0.0 0.0 0.0
   EMISFACT L0001961     HRDOW 0.0 0.0 0.0 0.0 0.0 0.0
   EMISFACT L0001961     HRDOW 0.0 0.0 0.0 0.0 0.0 0.0
   EMISFACT L0001961     HRDOW 0.0 0.0 0.0 0.0 0.0 0.0
   EMISFACT L0001962     HRDOW 0.0 0.0 0.0 0.0 0.0 0.0
   EMISFACT L0001962     HRDOW 0.0 0.0 0.0 0.0 0.0 0.0
   EMISFACT L0001962     HRDOW 0.0 0.0 0.0 0.0 0.0 0.0
   EMISFACT L0001962     HRDOW 0.0 0.0 0.0 0.0 0.0 0.0
   EMISFACT L0001963     HRDOW 0.0 0.0 0.0 0.0 0.0 0.0
   EMISFACT L0001963     HRDOW 0.0 0.0 0.0 0.0 0.0 0.0
   EMISFACT L0001963     HRDOW 0.0 0.0 0.0 0.0 0.0 0.0
   EMISFACT L0001963     HRDOW 0.0 0.0 0.0 0.0 0.0 0.0
   EMISFACT L0001964     HRDOW 0.0 0.0 0.0 0.0 0.0 0.0
   EMISFACT L0001964     HRDOW 0.0 0.0 0.0 0.0 0.0 0.0
   EMISFACT L0001964     HRDOW 0.0 0.0 0.0 0.0 0.0 0.0
   EMISFACT L0001964     HRDOW 0.0 0.0 0.0 0.0 0.0 0.0
   EMISFACT L0001965     HRDOW 0.0 0.0 0.0 0.0 0.0 0.0
   EMISFACT L0001965     HRDOW 0.0 0.0 0.0 0.0 0.0 0.0
   EMISFACT L0001965     HRDOW 0.0 0.0 0.0 0.0 0.0 0.0
   EMISFACT L0001965     HRDOW 0.0 0.0 0.0 0.0 0.0 0.0
   EMISFACT L0001966     HRDOW 0.0 0.0 0.0 0.0 0.0 0.0
   EMISFACT L0001966     HRDOW 0.0 0.0 0.0 0.0 0.0 0.0
   EMISFACT L0001966     HRDOW 0.0 0.0 0.0 0.0 0.0 0.0
   EMISFACT L0001966     HRDOW 0.0 0.0 0.0 0.0 0.0 0.0
   EMISFACT L0001967     HRDOW 0.0 0.0 0.0 0.0 0.0 0.0
   EMISFACT L0001967     HRDOW 0.0 0.0 0.0 0.0 0.0 0.0
   EMISFACT L0001967     HRDOW 0.0 0.0 0.0 0.0 0.0 0.0
   EMISFACT L0001967     HRDOW 0.0 0.0 0.0 0.0 0.0 0.0
   EMISFACT L0001968     HRDOW 0.0 0.0 0.0 0.0 0.0 0.0
   EMISFACT L0001968     HRDOW 0.0 0.0 0.0 0.0 0.0 0.0
   EMISFACT L0001968     HRDOW 0.0 0.0 0.0 0.0 0.0 0.0
   EMISFACT L0001968     HRDOW 0.0 0.0 0.0 0.0 0.0 0.0
   EMISFACT L0001969     HRDOW 0.0 0.0 0.0 0.0 0.0 0.0
   EMISFACT L0001969     HRDOW 0.0 0.0 0.0 0.0 0.0 0.0
   EMISFACT L0001969     HRDOW 0.0 0.0 0.0 0.0 0.0 0.0
   EMISFACT L0001969     HRDOW 0.0 0.0 0.0 0.0 0.0 0.0
   EMISFACT L0001970     HRDOW 0.0 0.0 0.0 0.0 0.0 0.0
   EMISFACT L0001970     HRDOW 0.0 0.0 0.0 0.0 0.0 0.0
   EMISFACT L0001970     HRDOW 0.0 0.0 0.0 0.0 0.0 0.0
   EMISFACT L0001970     HRDOW 0.0 0.0 0.0 0.0 0.0 0.0
   EMISFACT L0001971     HRDOW 0.0 0.0 0.0 0.0 0.0 0.0
   EMISFACT L0001971     HRDOW 0.0 0.0 0.0 0.0 0.0 0.0
   EMISFACT L0001971     HRDOW 0.0 0.0 0.0 0.0 0.0 0.0
   EMISFACT L0001971     HRDOW 0.0 0.0 0.0 0.0 0.0 0.0
   EMISFACT L0001972     HRDOW 0.0 0.0 0.0 0.0 0.0 0.0
   EMISFACT L0001972     HRDOW 0.0 0.0 0.0 0.0 0.0 0.0
```

```
EMISFACT L0001972     HRDOW 0.0 0.0 0.0 0.0 0.0 0.0
EMISFACT L0001972     HRDOW 0.0 0.0 0.0 0.0 0.0 0.0
EMISFACT L0001973     HRDOW 0.0 0.0 0.0 0.0 0.0 0.0
EMISFACT L0001973     HRDOW 0.0 0.0 0.0 0.0 0.0 0.0
EMISFACT L0001973     HRDOW 0.0 0.0 0.0 0.0 0.0 0.0
EMISFACT L0001973     HRDOW 0.0 0.0 0.0 0.0 0.0 0.0
EMISFACT L0001974     HRDOW 0.0 0.0 0.0 0.0 0.0 0.0
EMISFACT L0001974     HRDOW 0.0 0.0 0.0 0.0 0.0 0.0
EMISFACT L0001974     HRDOW 0.0 0.0 0.0 0.0 0.0 0.0
EMISFACT L0001974     HRDOW 0.0 0.0 0.0 0.0 0.0 0.0
EMISFACT L0001975     HRDOW 0.0 0.0 0.0 0.0 0.0 0.0
EMISFACT L0001975     HRDOW 0.0 0.0 0.0 0.0 0.0 0.0
EMISFACT L0001975     HRDOW 0.0 0.0 0.0 0.0 0.0 0.0
EMISFACT L0001975     HRDOW 0.0 0.0 0.0 0.0 0.0 0.0
EMISFACT L0001976     HRDOW 0.0 0.0 0.0 0.0 0.0 0.0
EMISFACT L0001976     HRDOW 0.0 0.0 0.0 0.0 0.0 0.0
EMISFACT L0001976     HRDOW 0.0 0.0 0.0 0.0 0.0 0.0
EMISFACT L0001976     HRDOW 0.0 0.0 0.0 0.0 0.0 0.0
EMISFACT L0001977     HRDOW 0.0 0.0 0.0 0.0 0.0 0.0
EMISFACT L0001977     HRDOW 0.0 0.0 0.0 0.0 0.0 0.0
EMISFACT L0001977     HRDOW 0.0 0.0 0.0 0.0 0.0 0.0
EMISFACT L0001977     HRDOW 0.0 0.0 0.0 0.0 0.0 0.0
EMISFACT L0001978     HRDOW 0.0 0.0 0.0 0.0 0.0 0.0
EMISFACT L0001978     HRDOW 0.0 0.0 0.0 0.0 0.0 0.0
EMISFACT L0001978     HRDOW 0.0 0.0 0.0 0.0 0.0 0.0
EMISFACT L0001978     HRDOW 0.0 0.0 0.0 0.0 0.0 0.0
EMISFACT L0001979     HRDOW 0.0 0.0 0.0 0.0 0.0 0.0
EMISFACT L0001979     HRDOW 0.0 0.0 0.0 0.0 0.0 0.0
EMISFACT L0001979     HRDOW 0.0 0.0 0.0 0.0 0.0 0.0
EMISFACT L0001979     HRDOW 0.0 0.0 0.0 0.0 0.0 0.0
EMISFACT L0001980     HRDOW 0.0 0.0 0.0 0.0 0.0 0.0
EMISFACT L0001980     HRDOW 0.0 0.0 0.0 0.0 0.0 0.0
EMISFACT L0001980     HRDOW 0.0 0.0 0.0 0.0 0.0 0.0
EMISFACT L0001980     HRDOW 0.0 0.0 0.0 0.0 0.0 0.0
EMISFACT L0001981     HRDOW 0.0 0.0 0.0 0.0 0.0 0.0
EMISFACT L0001981     HRDOW 0.0 0.0 0.0 0.0 0.0 0.0
EMISFACT L0001981     HRDOW 0.0 0.0 0.0 0.0 0.0 0.0
EMISFACT L0001981     HRDOW 0.0 0.0 0.0 0.0 0.0 0.0
EMISFACT L0001982     HRDOW 0.0 0.0 0.0 0.0 0.0 0.0
EMISFACT L0001982     HRDOW 0.0 0.0 0.0 0.0 0.0 0.0
EMISFACT L0001982     HRDOW 0.0 0.0 0.0 0.0 0.0 0.0
EMISFACT L0001982     HRDOW 0.0 0.0 0.0 0.0 0.0 0.0
EMISFACT L0001983     HRDOW 0.0 0.0 0.0 0.0 0.0 0.0
EMISFACT L0001983     HRDOW 0.0 0.0 0.0 0.0 0.0 0.0
EMISFACT L0001983     HRDOW 0.0 0.0 0.0 0.0 0.0 0.0
EMISFACT L0001983     HRDOW 0.0 0.0 0.0 0.0 0.0 0.0
EMISFACT L0001984     HRDOW 0.0 0.0 0.0 0.0 0.0 0.0
EMISFACT L0001984     HRDOW 0.0 0.0 0.0 0.0 0.0 0.0
EMISFACT L0001984     HRDOW 0.0 0.0 0.0 0.0 0.0 0.0
EMISFACT L0001984     HRDOW 0.0 0.0 0.0 0.0 0.0 0.0
EMISFACT L0001985     HRDOW 0.0 0.0 0.0 0.0 0.0 0.0
EMISFACT L0001985     HRDOW 0.0 0.0 0.0 0.0 0.0 0.0
EMISFACT L0001985     HRDOW 0.0 0.0 0.0 0.0 0.0 0.0
EMISFACT L0001985     HRDOW 0.0 0.0 0.0 0.0 0.0 0.0
EMISFACT L0001986     HRDOW 0.0 0.0 0.0 0.0 0.0 0.0
EMISFACT L0001986     HRDOW 0.0 0.0 0.0 0.0 0.0 0.0
EMISFACT L0001986     HRDOW 0.0 0.0 0.0 0.0 0.0 0.0
EMISFACT L0001986     HRDOW 0.0 0.0 0.0 0.0 0.0 0.0
EMISFACT L0001987     HRDOW 0.0 0.0 0.0 0.0 0.0 0.0
```

```
EMISFACT L0001987     HRDOW 0.0 0.0 0.0 0.0 0.0 0.0
EMISFACT L0001987     HRDOW 0.0 0.0 0.0 0.0 0.0 0.0
EMISFACT L0001987     HRDOW 0.0 0.0 0.0 0.0 0.0 0.0
EMISFACT L0001988     HRDOW 0.0 0.0 0.0 0.0 0.0 0.0
EMISFACT L0001988     HRDOW 0.0 0.0 0.0 0.0 0.0 0.0
EMISFACT L0001988     HRDOW 0.0 0.0 0.0 0.0 0.0 0.0
EMISFACT L0001988     HRDOW 0.0 0.0 0.0 0.0 0.0 0.0
EMISFACT L0001989     HRDOW 0.0 0.0 0.0 0.0 0.0 0.0
EMISFACT L0001989     HRDOW 0.0 0.0 0.0 0.0 0.0 0.0
EMISFACT L0001989     HRDOW 0.0 0.0 0.0 0.0 0.0 0.0
EMISFACT L0001989     HRDOW 0.0 0.0 0.0 0.0 0.0 0.0
EMISFACT L0001990     HRDOW 0.0 0.0 0.0 0.0 0.0 0.0
EMISFACT L0001990     HRDOW 0.0 0.0 0.0 0.0 0.0 0.0
EMISFACT L0001990     HRDOW 0.0 0.0 0.0 0.0 0.0 0.0
EMISFACT L0001990     HRDOW 0.0 0.0 0.0 0.0 0.0 0.0
EMISFACT L0001991     HRDOW 0.0 0.0 0.0 0.0 0.0 0.0
EMISFACT L0001991     HRDOW 0.0 0.0 0.0 0.0 0.0 0.0
EMISFACT L0001991     HRDOW 0.0 0.0 0.0 0.0 0.0 0.0
EMISFACT L0001991     HRDOW 0.0 0.0 0.0 0.0 0.0 0.0
EMISFACT L0001992     HRDOW 0.0 0.0 0.0 0.0 0.0 0.0
EMISFACT L0001992     HRDOW 0.0 0.0 0.0 0.0 0.0 0.0
EMISFACT L0001992     HRDOW 0.0 0.0 0.0 0.0 0.0 0.0
EMISFACT L0001992     HRDOW 0.0 0.0 0.0 0.0 0.0 0.0
EMISFACT L0001993     HRDOW 0.0 0.0 0.0 0.0 0.0 0.0
EMISFACT L0001993     HRDOW 0.0 0.0 0.0 0.0 0.0 0.0
EMISFACT L0001993     HRDOW 0.0 0.0 0.0 0.0 0.0 0.0
EMISFACT L0001993     HRDOW 0.0 0.0 0.0 0.0 0.0 0.0
EMISFACT L0001994     HRDOW 0.0 0.0 0.0 0.0 0.0 0.0
EMISFACT L0001994     HRDOW 0.0 0.0 0.0 0.0 0.0 0.0
EMISFACT L0001994     HRDOW 0.0 0.0 0.0 0.0 0.0 0.0
EMISFACT L0001994     HRDOW 0.0 0.0 0.0 0.0 0.0 0.0
EMISFACT L0001995     HRDOW 0.0 0.0 0.0 0.0 0.0 0.0
EMISFACT L0001995     HRDOW 0.0 0.0 0.0 0.0 0.0 0.0
EMISFACT L0001995     HRDOW 0.0 0.0 0.0 0.0 0.0 0.0
EMISFACT L0001995     HRDOW 0.0 0.0 0.0 0.0 0.0 0.0
EMISFACT L0001996     HRDOW 0.0 0.0 0.0 0.0 0.0 0.0
EMISFACT L0001996     HRDOW 0.0 0.0 0.0 0.0 0.0 0.0
EMISFACT L0001996     HRDOW 0.0 0.0 0.0 0.0 0.0 0.0
EMISFACT L0001996     HRDOW 0.0 0.0 0.0 0.0 0.0 0.0
EMISFACT L0001997     HRDOW 0.0 0.0 0.0 0.0 0.0 0.0
EMISFACT L0001997     HRDOW 0.0 0.0 0.0 0.0 0.0 0.0
EMISFACT L0001997     HRDOW 0.0 0.0 0.0 0.0 0.0 0.0
EMISFACT L0001997     HRDOW 0.0 0.0 0.0 0.0 0.0 0.0
EMISFACT L0001998     HRDOW 0.0 0.0 0.0 0.0 0.0 0.0
EMISFACT L0001998     HRDOW 0.0 0.0 0.0 0.0 0.0 0.0
EMISFACT L0001998     HRDOW 0.0 0.0 0.0 0.0 0.0 0.0
EMISFACT L0001998     HRDOW 0.0 0.0 0.0 0.0 0.0 0.0
EMISFACT L0001999     HRDOW 0.0 0.0 0.0 0.0 0.0 0.0
EMISFACT L0001999     HRDOW 0.0 0.0 0.0 0.0 0.0 0.0
EMISFACT L0001999     HRDOW 0.0 0.0 0.0 0.0 0.0 0.0
EMISFACT L0001999     HRDOW 0.0 0.0 0.0 0.0 0.0 0.0
EMISFACT L0002000     HRDOW 0.0 0.0 0.0 0.0 0.0 0.0
EMISFACT L0002000     HRDOW 0.0 0.0 0.0 0.0 0.0 0.0
EMISFACT L0002000     HRDOW 0.0 0.0 0.0 0.0 0.0 0.0
EMISFACT L0002000     HRDOW 0.0 0.0 0.0 0.0 0.0 0.0
EMISFACT L0002001     HRDOW 0.0 0.0 0.0 0.0 0.0 0.0
EMISFACT L0002001     HRDOW 0.0 0.0 0.0 0.0 0.0 0.0
EMISFACT L0002001     HRDOW 0.0 0.0 0.0 0.0 0.0 0.0
EMISFACT L0002001     HRDOW 0.0 0.0 0.0 0.0 0.0 0.0
```

```
EMISFACT L0002002     HRDOW 0.0 0.0 0.0 0.0 0.0 0.0
EMISFACT L0002002     HRDOW 0.0 0.0 0.0 0.0 0.0 0.0
EMISFACT L0002002     HRDOW 0.0 0.0 0.0 0.0 0.0 0.0
EMISFACT L0002002     HRDOW 0.0 0.0 0.0 0.0 0.0 0.0
EMISFACT L0002003     HRDOW 0.0 0.0 0.0 0.0 0.0 0.0
EMISFACT L0002003     HRDOW 0.0 0.0 0.0 0.0 0.0 0.0
EMISFACT L0002003     HRDOW 0.0 0.0 0.0 0.0 0.0 0.0
EMISFACT L0002003     HRDOW 0.0 0.0 0.0 0.0 0.0 0.0
EMISFACT L0002004     HRDOW 0.0 0.0 0.0 0.0 0.0 0.0
EMISFACT L0002004     HRDOW 0.0 0.0 0.0 0.0 0.0 0.0
EMISFACT L0002004     HRDOW 0.0 0.0 0.0 0.0 0.0 0.0
EMISFACT L0002004     HRDOW 0.0 0.0 0.0 0.0 0.0 0.0
EMISFACT L0002005     HRDOW 0.0 0.0 0.0 0.0 0.0 0.0
EMISFACT L0002005     HRDOW 0.0 0.0 0.0 0.0 0.0 0.0
EMISFACT L0002005     HRDOW 0.0 0.0 0.0 0.0 0.0 0.0
EMISFACT L0002005     HRDOW 0.0 0.0 0.0 0.0 0.0 0.0
EMISFACT L0002006     HRDOW 0.0 0.0 0.0 0.0 0.0 0.0
EMISFACT L0002006     HRDOW 0.0 0.0 0.0 0.0 0.0 0.0
EMISFACT L0002006     HRDOW 0.0 0.0 0.0 0.0 0.0 0.0
EMISFACT L0002006     HRDOW 0.0 0.0 0.0 0.0 0.0 0.0
EMISFACT L0002007     HRDOW 0.0 0.0 0.0 0.0 0.0 0.0
EMISFACT L0002007     HRDOW 0.0 0.0 0.0 0.0 0.0 0.0
EMISFACT L0002007     HRDOW 0.0 0.0 0.0 0.0 0.0 0.0
EMISFACT L0002007     HRDOW 0.0 0.0 0.0 0.0 0.0 0.0
EMISFACT L0002008     HRDOW 0.0 0.0 0.0 0.0 0.0 0.0
EMISFACT L0002008     HRDOW 0.0 0.0 0.0 0.0 0.0 0.0
EMISFACT L0002008     HRDOW 0.0 0.0 0.0 0.0 0.0 0.0
EMISFACT L0002008     HRDOW 0.0 0.0 0.0 0.0 0.0 0.0
EMISFACT L0002009     HRDOW 0.0 0.0 0.0 0.0 0.0 0.0
EMISFACT L0002009     HRDOW 0.0 0.0 0.0 0.0 0.0 0.0
EMISFACT L0002009     HRDOW 0.0 0.0 0.0 0.0 0.0 0.0
EMISFACT L0002009     HRDOW 0.0 0.0 0.0 0.0 0.0 0.0
EMISFACT L0002010     HRDOW 0.0 0.0 0.0 0.0 0.0 0.0
EMISFACT L0002010     HRDOW 0.0 0.0 0.0 0.0 0.0 0.0
EMISFACT L0002010     HRDOW 0.0 0.0 0.0 0.0 0.0 0.0
EMISFACT L0002010     HRDOW 0.0 0.0 0.0 0.0 0.0 0.0
EMISFACT L0002011     HRDOW 0.0 0.0 0.0 0.0 0.0 0.0
EMISFACT L0002011     HRDOW 0.0 0.0 0.0 0.0 0.0 0.0
EMISFACT L0002011     HRDOW 0.0 0.0 0.0 0.0 0.0 0.0
EMISFACT L0002011     HRDOW 0.0 0.0 0.0 0.0 0.0 0.0
EMISFACT L0002012     HRDOW 0.0 0.0 0.0 0.0 0.0 0.0
EMISFACT L0002012     HRDOW 0.0 0.0 0.0 0.0 0.0 0.0
EMISFACT L0002012     HRDOW 0.0 0.0 0.0 0.0 0.0 0.0
EMISFACT L0002012     HRDOW 0.0 0.0 0.0 0.0 0.0 0.0
EMISFACT L0002013     HRDOW 0.0 0.0 0.0 0.0 0.0 0.0
EMISFACT L0002013     HRDOW 0.0 0.0 0.0 0.0 0.0 0.0
EMISFACT L0002013     HRDOW 0.0 0.0 0.0 0.0 0.0 0.0
EMISFACT L0002013     HRDOW 0.0 0.0 0.0 0.0 0.0 0.0
EMISFACT L0002014     HRDOW 0.0 0.0 0.0 0.0 0.0 0.0
EMISFACT L0002014     HRDOW 0.0 0.0 0.0 0.0 0.0 0.0
EMISFACT L0002014     HRDOW 0.0 0.0 0.0 0.0 0.0 0.0
EMISFACT L0002014     HRDOW 0.0 0.0 0.0 0.0 0.0 0.0
EMISFACT L0002015     HRDOW 0.0 0.0 0.0 0.0 0.0 0.0
EMISFACT L0002015     HRDOW 0.0 0.0 0.0 0.0 0.0 0.0
EMISFACT L0002015     HRDOW 0.0 0.0 0.0 0.0 0.0 0.0
EMISFACT L0002015     HRDOW 0.0 0.0 0.0 0.0 0.0 0.0
EMISFACT L0002016     HRDOW 0.0 0.0 0.0 0.0 0.0 0.0
EMISFACT L0002016     HRDOW 0.0 0.0 0.0 0.0 0.0 0.0
EMISFACT L0002016     HRDOW 0.0 0.0 0.0 0.0 0.0 0.0
```

```
   EMISFACT L0002016     HRDOW 0.0 0.0 0.0 0.0 0.0 0.0
** WeekDays:
   EMISFACT L0002017     HRDOW 0.0 0.0 0.0 0.0 0.0 0.0
   EMISFACT L0002017     HRDOW 1.0 1.0 1.0 1.0 1.0 1.0
   EMISFACT L0002017     HRDOW 1.0 1.0 1.0 1.0 0.0 0.0
   EMISFACT L0002017     HRDOW 0.0 0.0 0.0 0.0 0.0 0.0
   EMISFACT L0002018     HRDOW 0.0 0.0 0.0 0.0 0.0 0.0
   EMISFACT L0002018     HRDOW 1.0 1.0 1.0 1.0 1.0 1.0
   EMISFACT L0002018     HRDOW 1.0 1.0 1.0 1.0 0.0 0.0
   EMISFACT L0002018     HRDOW 0.0 0.0 0.0 0.0 0.0 0.0
   EMISFACT L0002019     HRDOW 0.0 0.0 0.0 0.0 0.0 0.0
   EMISFACT L0002019     HRDOW 1.0 1.0 1.0 1.0 1.0 1.0
   EMISFACT L0002019     HRDOW 1.0 1.0 1.0 1.0 0.0 0.0
   EMISFACT L0002019     HRDOW 0.0 0.0 0.0 0.0 0.0 0.0
   EMISFACT L0002020     HRDOW 0.0 0.0 0.0 0.0 0.0 0.0
   EMISFACT L0002020     HRDOW 1.0 1.0 1.0 1.0 1.0 1.0
   EMISFACT L0002020     HRDOW 1.0 1.0 1.0 1.0 0.0 0.0
   EMISFACT L0002020     HRDOW 0.0 0.0 0.0 0.0 0.0 0.0
   EMISFACT L0002021     HRDOW 0.0 0.0 0.0 0.0 0.0 0.0
   EMISFACT L0002021     HRDOW 1.0 1.0 1.0 1.0 1.0 1.0
   EMISFACT L0002021     HRDOW 1.0 1.0 1.0 1.0 0.0 0.0
   EMISFACT L0002021     HRDOW 0.0 0.0 0.0 0.0 0.0 0.0
   EMISFACT L0002022     HRDOW 0.0 0.0 0.0 0.0 0.0 0.0
   EMISFACT L0002022     HRDOW 1.0 1.0 1.0 1.0 1.0 1.0
   EMISFACT L0002022     HRDOW 1.0 1.0 1.0 1.0 0.0 0.0
   EMISFACT L0002022     HRDOW 0.0 0.0 0.0 0.0 0.0 0.0
   EMISFACT L0002023     HRDOW 0.0 0.0 0.0 0.0 0.0 0.0
   EMISFACT L0002023     HRDOW 1.0 1.0 1.0 1.0 1.0 1.0
   EMISFACT L0002023     HRDOW 1.0 1.0 1.0 1.0 0.0 0.0
   EMISFACT L0002023     HRDOW 0.0 0.0 0.0 0.0 0.0 0.0
   EMISFACT L0002024     HRDOW 0.0 0.0 0.0 0.0 0.0 0.0
   EMISFACT L0002024     HRDOW 1.0 1.0 1.0 1.0 1.0 1.0
   EMISFACT L0002024     HRDOW 1.0 1.0 1.0 1.0 0.0 0.0
   EMISFACT L0002024     HRDOW 0.0 0.0 0.0 0.0 0.0 0.0
   EMISFACT L0002025     HRDOW 0.0 0.0 0.0 0.0 0.0 0.0
   EMISFACT L0002025     HRDOW 1.0 1.0 1.0 1.0 1.0 1.0
   EMISFACT L0002025     HRDOW 1.0 1.0 1.0 1.0 0.0 0.0
   EMISFACT L0002025     HRDOW 0.0 0.0 0.0 0.0 0.0 0.0
   EMISFACT L0002026     HRDOW 0.0 0.0 0.0 0.0 0.0 0.0
   EMISFACT L0002026     HRDOW 1.0 1.0 1.0 1.0 1.0 1.0
   EMISFACT L0002026     HRDOW 1.0 1.0 1.0 1.0 0.0 0.0
   EMISFACT L0002026     HRDOW 0.0 0.0 0.0 0.0 0.0 0.0
   EMISFACT L0002027     HRDOW 0.0 0.0 0.0 0.0 0.0 0.0
   EMISFACT L0002027     HRDOW 1.0 1.0 1.0 1.0 1.0 1.0
   EMISFACT L0002027     HRDOW 1.0 1.0 1.0 1.0 0.0 0.0
   EMISFACT L0002027     HRDOW 0.0 0.0 0.0 0.0 0.0 0.0
   EMISFACT L0002028     HRDOW 0.0 0.0 0.0 0.0 0.0 0.0
   EMISFACT L0002028     HRDOW 1.0 1.0 1.0 1.0 1.0 1.0
   EMISFACT L0002028     HRDOW 1.0 1.0 1.0 1.0 0.0 0.0
   EMISFACT L0002028     HRDOW 0.0 0.0 0.0 0.0 0.0 0.0
   EMISFACT L0002029     HRDOW 0.0 0.0 0.0 0.0 0.0 0.0
   EMISFACT L0002029     HRDOW 1.0 1.0 1.0 1.0 1.0 1.0
   EMISFACT L0002029     HRDOW 1.0 1.0 1.0 1.0 0.0 0.0
   EMISFACT L0002029     HRDOW 0.0 0.0 0.0 0.0 0.0 0.0
   EMISFACT L0002030     HRDOW 0.0 0.0 0.0 0.0 0.0 0.0
   EMISFACT L0002030     HRDOW 1.0 1.0 1.0 1.0 1.0 1.0
   EMISFACT L0002030     HRDOW 1.0 1.0 1.0 1.0 0.0 0.0
   EMISFACT L0002030     HRDOW 0.0 0.0 0.0 0.0 0.0 0.0
   EMISFACT L0002031     HRDOW 0.0 0.0 0.0 0.0 0.0 0.0
```

```
   EMISFACT L0002031     HRDOW 1.0 1.0 1.0 1.0 1.0 1.0
   EMISFACT L0002031     HRDOW 1.0 1.0 1.0 1.0 0.0 0.0
   EMISFACT L0002031     HRDOW 0.0 0.0 0.0 0.0 0.0 0.0
   EMISFACT L0002032     HRDOW 0.0 0.0 0.0 0.0 0.0 0.0
   EMISFACT L0002032     HRDOW 1.0 1.0 1.0 1.0 1.0 1.0
   EMISFACT L0002032     HRDOW 1.0 1.0 1.0 1.0 0.0 0.0
   EMISFACT L0002032     HRDOW 0.0 0.0 0.0 0.0 0.0 0.0
   EMISFACT L0002033     HRDOW 0.0 0.0 0.0 0.0 0.0 0.0
   EMISFACT L0002033     HRDOW 1.0 1.0 1.0 1.0 1.0 1.0
   EMISFACT L0002033     HRDOW 1.0 1.0 1.0 1.0 0.0 0.0
   EMISFACT L0002033     HRDOW 0.0 0.0 0.0 0.0 0.0 0.0
   EMISFACT L0002034     HRDOW 0.0 0.0 0.0 0.0 0.0 0.0
   EMISFACT L0002034     HRDOW 1.0 1.0 1.0 1.0 1.0 1.0
   EMISFACT L0002034     HRDOW 1.0 1.0 1.0 1.0 0.0 0.0
   EMISFACT L0002034     HRDOW 0.0 0.0 0.0 0.0 0.0 0.0
   EMISFACT L0002035     HRDOW 0.0 0.0 0.0 0.0 0.0 0.0
   EMISFACT L0002035     HRDOW 1.0 1.0 1.0 1.0 1.0 1.0
   EMISFACT L0002035     HRDOW 1.0 1.0 1.0 1.0 0.0 0.0
   EMISFACT L0002035     HRDOW 0.0 0.0 0.0 0.0 0.0 0.0
   EMISFACT L0002036     HRDOW 0.0 0.0 0.0 0.0 0.0 0.0
   EMISFACT L0002036     HRDOW 1.0 1.0 1.0 1.0 1.0 1.0
   EMISFACT L0002036     HRDOW 1.0 1.0 1.0 1.0 0.0 0.0
   EMISFACT L0002036     HRDOW 0.0 0.0 0.0 0.0 0.0 0.0
   EMISFACT L0002037     HRDOW 0.0 0.0 0.0 0.0 0.0 0.0
   EMISFACT L0002037     HRDOW 1.0 1.0 1.0 1.0 1.0 1.0
   EMISFACT L0002037     HRDOW 1.0 1.0 1.0 1.0 0.0 0.0
   EMISFACT L0002037     HRDOW 0.0 0.0 0.0 0.0 0.0 0.0
   EMISFACT L0002038     HRDOW 0.0 0.0 0.0 0.0 0.0 0.0
   EMISFACT L0002038     HRDOW 1.0 1.0 1.0 1.0 1.0 1.0
   EMISFACT L0002038     HRDOW 1.0 1.0 1.0 1.0 0.0 0.0
   EMISFACT L0002038     HRDOW 0.0 0.0 0.0 0.0 0.0 0.0
   EMISFACT L0002039     HRDOW 0.0 0.0 0.0 0.0 0.0 0.0
   EMISFACT L0002039     HRDOW 1.0 1.0 1.0 1.0 1.0 1.0
   EMISFACT L0002039     HRDOW 1.0 1.0 1.0 1.0 0.0 0.0
   EMISFACT L0002039     HRDOW 0.0 0.0 0.0 0.0 0.0 0.0
   EMISFACT L0002040     HRDOW 0.0 0.0 0.0 0.0 0.0 0.0
   EMISFACT L0002040     HRDOW 1.0 1.0 1.0 1.0 1.0 1.0
   EMISFACT L0002040     HRDOW 1.0 1.0 1.0 1.0 0.0 0.0
   EMISFACT L0002040     HRDOW 0.0 0.0 0.0 0.0 0.0 0.0
   EMISFACT L0002041     HRDOW 0.0 0.0 0.0 0.0 0.0 0.0
   EMISFACT L0002041     HRDOW 1.0 1.0 1.0 1.0 1.0 1.0
   EMISFACT L0002041     HRDOW 1.0 1.0 1.0 1.0 0.0 0.0
   EMISFACT L0002041     HRDOW 0.0 0.0 0.0 0.0 0.0 0.0
** Saturday:
   EMISFACT L0002017     HRDOW 0.0 0.0 0.0 0.0 0.0 0.0
   EMISFACT L0002017     HRDOW 0.0 0.0 0.0 0.0 0.0 0.0
   EMISFACT L0002017     HRDOW 0.0 0.0 0.0 0.0 0.0 0.0
   EMISFACT L0002017     HRDOW 0.0 0.0 0.0 0.0 0.0 0.0
   EMISFACT L0002018     HRDOW 0.0 0.0 0.0 0.0 0.0 0.0
   EMISFACT L0002018     HRDOW 0.0 0.0 0.0 0.0 0.0 0.0
   EMISFACT L0002018     HRDOW 0.0 0.0 0.0 0.0 0.0 0.0
   EMISFACT L0002018     HRDOW 0.0 0.0 0.0 0.0 0.0 0.0
   EMISFACT L0002019     HRDOW 0.0 0.0 0.0 0.0 0.0 0.0
   EMISFACT L0002019     HRDOW 0.0 0.0 0.0 0.0 0.0 0.0
   EMISFACT L0002019     HRDOW 0.0 0.0 0.0 0.0 0.0 0.0
   EMISFACT L0002019     HRDOW 0.0 0.0 0.0 0.0 0.0 0.0
   EMISFACT L0002020     HRDOW 0.0 0.0 0.0 0.0 0.0 0.0
   EMISFACT L0002020     HRDOW 0.0 0.0 0.0 0.0 0.0 0.0
   EMISFACT L0002020     HRDOW 0.0 0.0 0.0 0.0 0.0 0.0
```

```
EMISFACT L0002020     HRDOW 0.0 0.0 0.0 0.0 0.0 0.0
EMISFACT L0002021     HRDOW 0.0 0.0 0.0 0.0 0.0 0.0
EMISFACT L0002021     HRDOW 0.0 0.0 0.0 0.0 0.0 0.0
EMISFACT L0002021     HRDOW 0.0 0.0 0.0 0.0 0.0 0.0
EMISFACT L0002021     HRDOW 0.0 0.0 0.0 0.0 0.0 0.0
EMISFACT L0002022     HRDOW 0.0 0.0 0.0 0.0 0.0 0.0
EMISFACT L0002022     HRDOW 0.0 0.0 0.0 0.0 0.0 0.0
EMISFACT L0002022     HRDOW 0.0 0.0 0.0 0.0 0.0 0.0
EMISFACT L0002022     HRDOW 0.0 0.0 0.0 0.0 0.0 0.0
EMISFACT L0002023     HRDOW 0.0 0.0 0.0 0.0 0.0 0.0
EMISFACT L0002023     HRDOW 0.0 0.0 0.0 0.0 0.0 0.0
EMISFACT L0002023     HRDOW 0.0 0.0 0.0 0.0 0.0 0.0
EMISFACT L0002023     HRDOW 0.0 0.0 0.0 0.0 0.0 0.0
EMISFACT L0002024     HRDOW 0.0 0.0 0.0 0.0 0.0 0.0
EMISFACT L0002024     HRDOW 0.0 0.0 0.0 0.0 0.0 0.0
EMISFACT L0002024     HRDOW 0.0 0.0 0.0 0.0 0.0 0.0
EMISFACT L0002024     HRDOW 0.0 0.0 0.0 0.0 0.0 0.0
EMISFACT L0002025     HRDOW 0.0 0.0 0.0 0.0 0.0 0.0
EMISFACT L0002025     HRDOW 0.0 0.0 0.0 0.0 0.0 0.0
EMISFACT L0002025     HRDOW 0.0 0.0 0.0 0.0 0.0 0.0
EMISFACT L0002025     HRDOW 0.0 0.0 0.0 0.0 0.0 0.0
EMISFACT L0002026     HRDOW 0.0 0.0 0.0 0.0 0.0 0.0
EMISFACT L0002026     HRDOW 0.0 0.0 0.0 0.0 0.0 0.0
EMISFACT L0002026     HRDOW 0.0 0.0 0.0 0.0 0.0 0.0
EMISFACT L0002026     HRDOW 0.0 0.0 0.0 0.0 0.0 0.0
EMISFACT L0002027     HRDOW 0.0 0.0 0.0 0.0 0.0 0.0
EMISFACT L0002027     HRDOW 0.0 0.0 0.0 0.0 0.0 0.0
EMISFACT L0002027     HRDOW 0.0 0.0 0.0 0.0 0.0 0.0
EMISFACT L0002027     HRDOW 0.0 0.0 0.0 0.0 0.0 0.0
EMISFACT L0002028     HRDOW 0.0 0.0 0.0 0.0 0.0 0.0
EMISFACT L0002028     HRDOW 0.0 0.0 0.0 0.0 0.0 0.0
EMISFACT L0002028     HRDOW 0.0 0.0 0.0 0.0 0.0 0.0
EMISFACT L0002028     HRDOW 0.0 0.0 0.0 0.0 0.0 0.0
EMISFACT L0002029     HRDOW 0.0 0.0 0.0 0.0 0.0 0.0
EMISFACT L0002029     HRDOW 0.0 0.0 0.0 0.0 0.0 0.0
EMISFACT L0002029     HRDOW 0.0 0.0 0.0 0.0 0.0 0.0
EMISFACT L0002029     HRDOW 0.0 0.0 0.0 0.0 0.0 0.0
EMISFACT L0002030     HRDOW 0.0 0.0 0.0 0.0 0.0 0.0
EMISFACT L0002030     HRDOW 0.0 0.0 0.0 0.0 0.0 0.0
EMISFACT L0002030     HRDOW 0.0 0.0 0.0 0.0 0.0 0.0
EMISFACT L0002030     HRDOW 0.0 0.0 0.0 0.0 0.0 0.0
EMISFACT L0002031     HRDOW 0.0 0.0 0.0 0.0 0.0 0.0
EMISFACT L0002031     HRDOW 0.0 0.0 0.0 0.0 0.0 0.0
EMISFACT L0002031     HRDOW 0.0 0.0 0.0 0.0 0.0 0.0
EMISFACT L0002031     HRDOW 0.0 0.0 0.0 0.0 0.0 0.0
EMISFACT L0002032     HRDOW 0.0 0.0 0.0 0.0 0.0 0.0
EMISFACT L0002032     HRDOW 0.0 0.0 0.0 0.0 0.0 0.0
EMISFACT L0002032     HRDOW 0.0 0.0 0.0 0.0 0.0 0.0
EMISFACT L0002032     HRDOW 0.0 0.0 0.0 0.0 0.0 0.0
EMISFACT L0002033     HRDOW 0.0 0.0 0.0 0.0 0.0 0.0
EMISFACT L0002033     HRDOW 0.0 0.0 0.0 0.0 0.0 0.0
EMISFACT L0002033     HRDOW 0.0 0.0 0.0 0.0 0.0 0.0
EMISFACT L0002033     HRDOW 0.0 0.0 0.0 0.0 0.0 0.0
EMISFACT L0002034     HRDOW 0.0 0.0 0.0 0.0 0.0 0.0
EMISFACT L0002034     HRDOW 0.0 0.0 0.0 0.0 0.0 0.0
EMISFACT L0002034     HRDOW 0.0 0.0 0.0 0.0 0.0 0.0
EMISFACT L0002034     HRDOW 0.0 0.0 0.0 0.0 0.0 0.0
EMISFACT L0002035     HRDOW 0.0 0.0 0.0 0.0 0.0 0.0
EMISFACT L0002035     HRDOW 0.0 0.0 0.0 0.0 0.0 0.0
```

```
   EMISFACT L0002035     HRDOW 0.0 0.0 0.0 0.0 0.0 0.0
   EMISFACT L0002035     HRDOW 0.0 0.0 0.0 0.0 0.0 0.0
   EMISFACT L0002036     HRDOW 0.0 0.0 0.0 0.0 0.0 0.0
   EMISFACT L0002036     HRDOW 0.0 0.0 0.0 0.0 0.0 0.0
   EMISFACT L0002036     HRDOW 0.0 0.0 0.0 0.0 0.0 0.0
   EMISFACT L0002036     HRDOW 0.0 0.0 0.0 0.0 0.0 0.0
   EMISFACT L0002037     HRDOW 0.0 0.0 0.0 0.0 0.0 0.0
   EMISFACT L0002037     HRDOW 0.0 0.0 0.0 0.0 0.0 0.0
   EMISFACT L0002037     HRDOW 0.0 0.0 0.0 0.0 0.0 0.0
   EMISFACT L0002037     HRDOW 0.0 0.0 0.0 0.0 0.0 0.0
   EMISFACT L0002038     HRDOW 0.0 0.0 0.0 0.0 0.0 0.0
   EMISFACT L0002038     HRDOW 0.0 0.0 0.0 0.0 0.0 0.0
   EMISFACT L0002038     HRDOW 0.0 0.0 0.0 0.0 0.0 0.0
   EMISFACT L0002038     HRDOW 0.0 0.0 0.0 0.0 0.0 0.0
   EMISFACT L0002039     HRDOW 0.0 0.0 0.0 0.0 0.0 0.0
   EMISFACT L0002039     HRDOW 0.0 0.0 0.0 0.0 0.0 0.0
   EMISFACT L0002039     HRDOW 0.0 0.0 0.0 0.0 0.0 0.0
   EMISFACT L0002039     HRDOW 0.0 0.0 0.0 0.0 0.0 0.0
   EMISFACT L0002040     HRDOW 0.0 0.0 0.0 0.0 0.0 0.0
   EMISFACT L0002040     HRDOW 0.0 0.0 0.0 0.0 0.0 0.0
   EMISFACT L0002040     HRDOW 0.0 0.0 0.0 0.0 0.0 0.0
   EMISFACT L0002040     HRDOW 0.0 0.0 0.0 0.0 0.0 0.0
   EMISFACT L0002041     HRDOW 0.0 0.0 0.0 0.0 0.0 0.0
   EMISFACT L0002041     HRDOW 0.0 0.0 0.0 0.0 0.0 0.0
   EMISFACT L0002041     HRDOW 0.0 0.0 0.0 0.0 0.0 0.0
   EMISFACT L0002041     HRDOW 0.0 0.0 0.0 0.0 0.0 0.0
** Sunday:
   EMISFACT L0002017     HRDOW 0.0 0.0 0.0 0.0 0.0 0.0
   EMISFACT L0002017     HRDOW 0.0 0.0 0.0 0.0 0.0 0.0
   EMISFACT L0002017     HRDOW 0.0 0.0 0.0 0.0 0.0 0.0
   EMISFACT L0002017     HRDOW 0.0 0.0 0.0 0.0 0.0 0.0
   EMISFACT L0002018     HRDOW 0.0 0.0 0.0 0.0 0.0 0.0
   EMISFACT L0002018     HRDOW 0.0 0.0 0.0 0.0 0.0 0.0
   EMISFACT L0002018     HRDOW 0.0 0.0 0.0 0.0 0.0 0.0
   EMISFACT L0002018     HRDOW 0.0 0.0 0.0 0.0 0.0 0.0
   EMISFACT L0002019     HRDOW 0.0 0.0 0.0 0.0 0.0 0.0
   EMISFACT L0002019     HRDOW 0.0 0.0 0.0 0.0 0.0 0.0
   EMISFACT L0002019     HRDOW 0.0 0.0 0.0 0.0 0.0 0.0
   EMISFACT L0002019     HRDOW 0.0 0.0 0.0 0.0 0.0 0.0
   EMISFACT L0002020     HRDOW 0.0 0.0 0.0 0.0 0.0 0.0
   EMISFACT L0002020     HRDOW 0.0 0.0 0.0 0.0 0.0 0.0
   EMISFACT L0002020     HRDOW 0.0 0.0 0.0 0.0 0.0 0.0
   EMISFACT L0002020     HRDOW 0.0 0.0 0.0 0.0 0.0 0.0
   EMISFACT L0002021     HRDOW 0.0 0.0 0.0 0.0 0.0 0.0
   EMISFACT L0002021     HRDOW 0.0 0.0 0.0 0.0 0.0 0.0
   EMISFACT L0002021     HRDOW 0.0 0.0 0.0 0.0 0.0 0.0
   EMISFACT L0002021     HRDOW 0.0 0.0 0.0 0.0 0.0 0.0
   EMISFACT L0002022     HRDOW 0.0 0.0 0.0 0.0 0.0 0.0
   EMISFACT L0002022     HRDOW 0.0 0.0 0.0 0.0 0.0 0.0
   EMISFACT L0002022     HRDOW 0.0 0.0 0.0 0.0 0.0 0.0
   EMISFACT L0002022     HRDOW 0.0 0.0 0.0 0.0 0.0 0.0
   EMISFACT L0002023     HRDOW 0.0 0.0 0.0 0.0 0.0 0.0
   EMISFACT L0002023     HRDOW 0.0 0.0 0.0 0.0 0.0 0.0
   EMISFACT L0002023     HRDOW 0.0 0.0 0.0 0.0 0.0 0.0
   EMISFACT L0002023     HRDOW 0.0 0.0 0.0 0.0 0.0 0.0
   EMISFACT L0002024     HRDOW 0.0 0.0 0.0 0.0 0.0 0.0
   EMISFACT L0002024     HRDOW 0.0 0.0 0.0 0.0 0.0 0.0
   EMISFACT L0002024     HRDOW 0.0 0.0 0.0 0.0 0.0 0.0
   EMISFACT L0002024     HRDOW 0.0 0.0 0.0 0.0 0.0 0.0
```

```
EMISFACT L0002025     HRDOW 0.0 0.0 0.0 0.0 0.0 0.0
EMISFACT L0002025     HRDOW 0.0 0.0 0.0 0.0 0.0 0.0
EMISFACT L0002025     HRDOW 0.0 0.0 0.0 0.0 0.0 0.0
EMISFACT L0002025     HRDOW 0.0 0.0 0.0 0.0 0.0 0.0
EMISFACT L0002026     HRDOW 0.0 0.0 0.0 0.0 0.0 0.0
EMISFACT L0002026     HRDOW 0.0 0.0 0.0 0.0 0.0 0.0
EMISFACT L0002026     HRDOW 0.0 0.0 0.0 0.0 0.0 0.0
EMISFACT L0002026     HRDOW 0.0 0.0 0.0 0.0 0.0 0.0
EMISFACT L0002027     HRDOW 0.0 0.0 0.0 0.0 0.0 0.0
EMISFACT L0002027     HRDOW 0.0 0.0 0.0 0.0 0.0 0.0
EMISFACT L0002027     HRDOW 0.0 0.0 0.0 0.0 0.0 0.0
EMISFACT L0002027     HRDOW 0.0 0.0 0.0 0.0 0.0 0.0
EMISFACT L0002028     HRDOW 0.0 0.0 0.0 0.0 0.0 0.0
EMISFACT L0002028     HRDOW 0.0 0.0 0.0 0.0 0.0 0.0
EMISFACT L0002028     HRDOW 0.0 0.0 0.0 0.0 0.0 0.0
EMISFACT L0002028     HRDOW 0.0 0.0 0.0 0.0 0.0 0.0
EMISFACT L0002029     HRDOW 0.0 0.0 0.0 0.0 0.0 0.0
EMISFACT L0002029     HRDOW 0.0 0.0 0.0 0.0 0.0 0.0
EMISFACT L0002029     HRDOW 0.0 0.0 0.0 0.0 0.0 0.0
EMISFACT L0002029     HRDOW 0.0 0.0 0.0 0.0 0.0 0.0
EMISFACT L0002030     HRDOW 0.0 0.0 0.0 0.0 0.0 0.0
EMISFACT L0002030     HRDOW 0.0 0.0 0.0 0.0 0.0 0.0
EMISFACT L0002030     HRDOW 0.0 0.0 0.0 0.0 0.0 0.0
EMISFACT L0002030     HRDOW 0.0 0.0 0.0 0.0 0.0 0.0
EMISFACT L0002031     HRDOW 0.0 0.0 0.0 0.0 0.0 0.0
EMISFACT L0002031     HRDOW 0.0 0.0 0.0 0.0 0.0 0.0
EMISFACT L0002031     HRDOW 0.0 0.0 0.0 0.0 0.0 0.0
EMISFACT L0002031     HRDOW 0.0 0.0 0.0 0.0 0.0 0.0
EMISFACT L0002032     HRDOW 0.0 0.0 0.0 0.0 0.0 0.0
EMISFACT L0002032     HRDOW 0.0 0.0 0.0 0.0 0.0 0.0
EMISFACT L0002032     HRDOW 0.0 0.0 0.0 0.0 0.0 0.0
EMISFACT L0002032     HRDOW 0.0 0.0 0.0 0.0 0.0 0.0
EMISFACT L0002033     HRDOW 0.0 0.0 0.0 0.0 0.0 0.0
EMISFACT L0002033     HRDOW 0.0 0.0 0.0 0.0 0.0 0.0
EMISFACT L0002033     HRDOW 0.0 0.0 0.0 0.0 0.0 0.0
EMISFACT L0002033     HRDOW 0.0 0.0 0.0 0.0 0.0 0.0
EMISFACT L0002034     HRDOW 0.0 0.0 0.0 0.0 0.0 0.0
EMISFACT L0002034     HRDOW 0.0 0.0 0.0 0.0 0.0 0.0
EMISFACT L0002034     HRDOW 0.0 0.0 0.0 0.0 0.0 0.0
EMISFACT L0002034     HRDOW 0.0 0.0 0.0 0.0 0.0 0.0
EMISFACT L0002035     HRDOW 0.0 0.0 0.0 0.0 0.0 0.0
EMISFACT L0002035     HRDOW 0.0 0.0 0.0 0.0 0.0 0.0
EMISFACT L0002035     HRDOW 0.0 0.0 0.0 0.0 0.0 0.0
EMISFACT L0002035     HRDOW 0.0 0.0 0.0 0.0 0.0 0.0
EMISFACT L0002036     HRDOW 0.0 0.0 0.0 0.0 0.0 0.0
EMISFACT L0002036     HRDOW 0.0 0.0 0.0 0.0 0.0 0.0
EMISFACT L0002036     HRDOW 0.0 0.0 0.0 0.0 0.0 0.0
EMISFACT L0002036     HRDOW 0.0 0.0 0.0 0.0 0.0 0.0
EMISFACT L0002037     HRDOW 0.0 0.0 0.0 0.0 0.0 0.0
EMISFACT L0002037     HRDOW 0.0 0.0 0.0 0.0 0.0 0.0
EMISFACT L0002037     HRDOW 0.0 0.0 0.0 0.0 0.0 0.0
EMISFACT L0002037     HRDOW 0.0 0.0 0.0 0.0 0.0 0.0
EMISFACT L0002038     HRDOW 0.0 0.0 0.0 0.0 0.0 0.0
EMISFACT L0002038     HRDOW 0.0 0.0 0.0 0.0 0.0 0.0
EMISFACT L0002038     HRDOW 0.0 0.0 0.0 0.0 0.0 0.0
EMISFACT L0002038     HRDOW 0.0 0.0 0.0 0.0 0.0 0.0
EMISFACT L0002039     HRDOW 0.0 0.0 0.0 0.0 0.0 0.0
EMISFACT L0002039     HRDOW 0.0 0.0 0.0 0.0 0.0 0.0
EMISFACT L0002039     HRDOW 0.0 0.0 0.0 0.0 0.0 0.0
```

```
   EMISFACT L0002039     HRDOW 0.0 0.0 0.0 0.0 0.0 0.0
   EMISFACT L0002040     HRDOW 0.0 0.0 0.0 0.0 0.0 0.0
   EMISFACT L0002040     HRDOW 0.0 0.0 0.0 0.0 0.0 0.0
   EMISFACT L0002040     HRDOW 0.0 0.0 0.0 0.0 0.0 0.0
   EMISFACT L0002040     HRDOW 0.0 0.0 0.0 0.0 0.0 0.0
   EMISFACT L0002041     HRDOW 0.0 0.0 0.0 0.0 0.0 0.0
   EMISFACT L0002041     HRDOW 0.0 0.0 0.0 0.0 0.0 0.0
   EMISFACT L0002041     HRDOW 0.0 0.0 0.0 0.0 0.0 0.0
   EMISFACT L0002041     HRDOW 0.0 0.0 0.0 0.0 0.0 0.0
** WeekDays:
   EMISFACT L0002042     HRDOW 0.0 0.0 0.0 0.0 0.0 0.0
   EMISFACT L0002042     HRDOW 1.0 1.0 1.0 1.0 1.0 1.0
   EMISFACT L0002042     HRDOW 1.0 1.0 1.0 1.0 0.0 0.0
   EMISFACT L0002042     HRDOW 0.0 0.0 0.0 0.0 0.0 0.0
   EMISFACT L0002043     HRDOW 0.0 0.0 0.0 0.0 0.0 0.0
   EMISFACT L0002043     HRDOW 1.0 1.0 1.0 1.0 1.0 1.0
   EMISFACT L0002043     HRDOW 1.0 1.0 1.0 1.0 0.0 0.0
   EMISFACT L0002043     HRDOW 0.0 0.0 0.0 0.0 0.0 0.0
   EMISFACT L0002044     HRDOW 0.0 0.0 0.0 0.0 0.0 0.0
   EMISFACT L0002044     HRDOW 1.0 1.0 1.0 1.0 1.0 1.0
   EMISFACT L0002044     HRDOW 1.0 1.0 1.0 1.0 0.0 0.0
   EMISFACT L0002044     HRDOW 0.0 0.0 0.0 0.0 0.0 0.0
   EMISFACT L0002045     HRDOW 0.0 0.0 0.0 0.0 0.0 0.0
   EMISFACT L0002045     HRDOW 1.0 1.0 1.0 1.0 1.0 1.0
   EMISFACT L0002045     HRDOW 1.0 1.0 1.0 1.0 0.0 0.0
   EMISFACT L0002045     HRDOW 0.0 0.0 0.0 0.0 0.0 0.0
   EMISFACT L0002046     HRDOW 0.0 0.0 0.0 0.0 0.0 0.0
   EMISFACT L0002046     HRDOW 1.0 1.0 1.0 1.0 1.0 1.0
   EMISFACT L0002046     HRDOW 1.0 1.0 1.0 1.0 0.0 0.0
   EMISFACT L0002046     HRDOW 0.0 0.0 0.0 0.0 0.0 0.0
   EMISFACT L0002047     HRDOW 0.0 0.0 0.0 0.0 0.0 0.0
   EMISFACT L0002047     HRDOW 1.0 1.0 1.0 1.0 1.0 1.0
   EMISFACT L0002047     HRDOW 1.0 1.0 1.0 1.0 0.0 0.0
   EMISFACT L0002047     HRDOW 0.0 0.0 0.0 0.0 0.0 0.0
   EMISFACT L0002048     HRDOW 0.0 0.0 0.0 0.0 0.0 0.0
   EMISFACT L0002048     HRDOW 1.0 1.0 1.0 1.0 1.0 1.0
   EMISFACT L0002048     HRDOW 1.0 1.0 1.0 1.0 0.0 0.0
   EMISFACT L0002048     HRDOW 0.0 0.0 0.0 0.0 0.0 0.0
   EMISFACT L0002049     HRDOW 0.0 0.0 0.0 0.0 0.0 0.0
   EMISFACT L0002049     HRDOW 1.0 1.0 1.0 1.0 1.0 1.0
   EMISFACT L0002049     HRDOW 1.0 1.0 1.0 1.0 0.0 0.0
   EMISFACT L0002049     HRDOW 0.0 0.0 0.0 0.0 0.0 0.0
   EMISFACT L0002050     HRDOW 0.0 0.0 0.0 0.0 0.0 0.0
   EMISFACT L0002050     HRDOW 1.0 1.0 1.0 1.0 1.0 1.0
   EMISFACT L0002050     HRDOW 1.0 1.0 1.0 1.0 0.0 0.0
   EMISFACT L0002050     HRDOW 0.0 0.0 0.0 0.0 0.0 0.0
   EMISFACT L0002051     HRDOW 0.0 0.0 0.0 0.0 0.0 0.0
   EMISFACT L0002051     HRDOW 1.0 1.0 1.0 1.0 1.0 1.0
   EMISFACT L0002051     HRDOW 1.0 1.0 1.0 1.0 0.0 0.0
   EMISFACT L0002051     HRDOW 0.0 0.0 0.0 0.0 0.0 0.0
   EMISFACT L0002052     HRDOW 0.0 0.0 0.0 0.0 0.0 0.0
   EMISFACT L0002052     HRDOW 1.0 1.0 1.0 1.0 1.0 1.0
   EMISFACT L0002052     HRDOW 1.0 1.0 1.0 1.0 0.0 0.0
   EMISFACT L0002052     HRDOW 0.0 0.0 0.0 0.0 0.0 0.0
   EMISFACT L0002053     HRDOW 0.0 0.0 0.0 0.0 0.0 0.0
   EMISFACT L0002053     HRDOW 1.0 1.0 1.0 1.0 1.0 1.0
   EMISFACT L0002053     HRDOW 1.0 1.0 1.0 1.0 0.0 0.0
   EMISFACT L0002053     HRDOW 0.0 0.0 0.0 0.0 0.0 0.0
   EMISFACT L0002054     HRDOW 0.0 0.0 0.0 0.0 0.0 0.0
```

```
   EMISFACT L0002054     HRDOW 1.0 1.0 1.0 1.0 1.0 1.0
   EMISFACT L0002054     HRDOW 1.0 1.0 1.0 1.0 0.0 0.0
   EMISFACT L0002054     HRDOW 0.0 0.0 0.0 0.0 0.0 0.0
   EMISFACT L0002055     HRDOW 0.0 0.0 0.0 0.0 0.0 0.0
   EMISFACT L0002055     HRDOW 1.0 1.0 1.0 1.0 1.0 1.0
   EMISFACT L0002055     HRDOW 1.0 1.0 1.0 1.0 0.0 0.0
   EMISFACT L0002055     HRDOW 0.0 0.0 0.0 0.0 0.0 0.0
** Saturday:
   EMISFACT L0002042     HRDOW 0.0 0.0 0.0 0.0 0.0 0.0
   EMISFACT L0002042     HRDOW 0.0 0.0 0.0 0.0 0.0 0.0
   EMISFACT L0002042     HRDOW 0.0 0.0 0.0 0.0 0.0 0.0
   EMISFACT L0002042     HRDOW 0.0 0.0 0.0 0.0 0.0 0.0
   EMISFACT L0002043     HRDOW 0.0 0.0 0.0 0.0 0.0 0.0
   EMISFACT L0002043     HRDOW 0.0 0.0 0.0 0.0 0.0 0.0
   EMISFACT L0002043     HRDOW 0.0 0.0 0.0 0.0 0.0 0.0
   EMISFACT L0002043     HRDOW 0.0 0.0 0.0 0.0 0.0 0.0
   EMISFACT L0002044     HRDOW 0.0 0.0 0.0 0.0 0.0 0.0
   EMISFACT L0002044     HRDOW 0.0 0.0 0.0 0.0 0.0 0.0
   EMISFACT L0002044     HRDOW 0.0 0.0 0.0 0.0 0.0 0.0
   EMISFACT L0002044     HRDOW 0.0 0.0 0.0 0.0 0.0 0.0
   EMISFACT L0002045     HRDOW 0.0 0.0 0.0 0.0 0.0 0.0
   EMISFACT L0002045     HRDOW 0.0 0.0 0.0 0.0 0.0 0.0
   EMISFACT L0002045     HRDOW 0.0 0.0 0.0 0.0 0.0 0.0
   EMISFACT L0002045     HRDOW 0.0 0.0 0.0 0.0 0.0 0.0
   EMISFACT L0002046     HRDOW 0.0 0.0 0.0 0.0 0.0 0.0
   EMISFACT L0002046     HRDOW 0.0 0.0 0.0 0.0 0.0 0.0
   EMISFACT L0002046     HRDOW 0.0 0.0 0.0 0.0 0.0 0.0
   EMISFACT L0002046     HRDOW 0.0 0.0 0.0 0.0 0.0 0.0
   EMISFACT L0002047     HRDOW 0.0 0.0 0.0 0.0 0.0 0.0
   EMISFACT L0002047     HRDOW 0.0 0.0 0.0 0.0 0.0 0.0
   EMISFACT L0002047     HRDOW 0.0 0.0 0.0 0.0 0.0 0.0
   EMISFACT L0002047     HRDOW 0.0 0.0 0.0 0.0 0.0 0.0
   EMISFACT L0002048     HRDOW 0.0 0.0 0.0 0.0 0.0 0.0
   EMISFACT L0002048     HRDOW 0.0 0.0 0.0 0.0 0.0 0.0
   EMISFACT L0002048     HRDOW 0.0 0.0 0.0 0.0 0.0 0.0
   EMISFACT L0002048     HRDOW 0.0 0.0 0.0 0.0 0.0 0.0
   EMISFACT L0002049     HRDOW 0.0 0.0 0.0 0.0 0.0 0.0
   EMISFACT L0002049     HRDOW 0.0 0.0 0.0 0.0 0.0 0.0
   EMISFACT L0002049     HRDOW 0.0 0.0 0.0 0.0 0.0 0.0
   EMISFACT L0002049     HRDOW 0.0 0.0 0.0 0.0 0.0 0.0
   EMISFACT L0002050     HRDOW 0.0 0.0 0.0 0.0 0.0 0.0
   EMISFACT L0002050     HRDOW 0.0 0.0 0.0 0.0 0.0 0.0
   EMISFACT L0002050     HRDOW 0.0 0.0 0.0 0.0 0.0 0.0
   EMISFACT L0002050     HRDOW 0.0 0.0 0.0 0.0 0.0 0.0
   EMISFACT L0002051     HRDOW 0.0 0.0 0.0 0.0 0.0 0.0
   EMISFACT L0002051     HRDOW 0.0 0.0 0.0 0.0 0.0 0.0
   EMISFACT L0002051     HRDOW 0.0 0.0 0.0 0.0 0.0 0.0
   EMISFACT L0002051     HRDOW 0.0 0.0 0.0 0.0 0.0 0.0
   EMISFACT L0002052     HRDOW 0.0 0.0 0.0 0.0 0.0 0.0
   EMISFACT L0002052     HRDOW 0.0 0.0 0.0 0.0 0.0 0.0
   EMISFACT L0002052     HRDOW 0.0 0.0 0.0 0.0 0.0 0.0
   EMISFACT L0002052     HRDOW 0.0 0.0 0.0 0.0 0.0 0.0
   EMISFACT L0002053     HRDOW 0.0 0.0 0.0 0.0 0.0 0.0
   EMISFACT L0002053     HRDOW 0.0 0.0 0.0 0.0 0.0 0.0
   EMISFACT L0002053     HRDOW 0.0 0.0 0.0 0.0 0.0 0.0
   EMISFACT L0002053     HRDOW 0.0 0.0 0.0 0.0 0.0 0.0
   EMISFACT L0002054     HRDOW 0.0 0.0 0.0 0.0 0.0 0.0
   EMISFACT L0002054     HRDOW 0.0 0.0 0.0 0.0 0.0 0.0
   EMISFACT L0002054     HRDOW 0.0 0.0 0.0 0.0 0.0 0.0
```

```
   EMISFACT L0002054     HRDOW 0.0 0.0 0.0 0.0 0.0 0.0
   EMISFACT L0002055     HRDOW 0.0 0.0 0.0 0.0 0.0 0.0
   EMISFACT L0002055     HRDOW 0.0 0.0 0.0 0.0 0.0 0.0
   EMISFACT L0002055     HRDOW 0.0 0.0 0.0 0.0 0.0 0.0
   EMISFACT L0002055     HRDOW 0.0 0.0 0.0 0.0 0.0 0.0
** Sunday:
   EMISFACT L0002042     HRDOW 0.0 0.0 0.0 0.0 0.0 0.0
   EMISFACT L0002042     HRDOW 0.0 0.0 0.0 0.0 0.0 0.0
   EMISFACT L0002042     HRDOW 0.0 0.0 0.0 0.0 0.0 0.0
   EMISFACT L0002042     HRDOW 0.0 0.0 0.0 0.0 0.0 0.0
   EMISFACT L0002043     HRDOW 0.0 0.0 0.0 0.0 0.0 0.0
   EMISFACT L0002043     HRDOW 0.0 0.0 0.0 0.0 0.0 0.0
   EMISFACT L0002043     HRDOW 0.0 0.0 0.0 0.0 0.0 0.0
   EMISFACT L0002043     HRDOW 0.0 0.0 0.0 0.0 0.0 0.0
   EMISFACT L0002044     HRDOW 0.0 0.0 0.0 0.0 0.0 0.0
   EMISFACT L0002044     HRDOW 0.0 0.0 0.0 0.0 0.0 0.0
   EMISFACT L0002044     HRDOW 0.0 0.0 0.0 0.0 0.0 0.0
   EMISFACT L0002044     HRDOW 0.0 0.0 0.0 0.0 0.0 0.0
   EMISFACT L0002045     HRDOW 0.0 0.0 0.0 0.0 0.0 0.0
   EMISFACT L0002045     HRDOW 0.0 0.0 0.0 0.0 0.0 0.0
   EMISFACT L0002045     HRDOW 0.0 0.0 0.0 0.0 0.0 0.0
   EMISFACT L0002045     HRDOW 0.0 0.0 0.0 0.0 0.0 0.0
   EMISFACT L0002046     HRDOW 0.0 0.0 0.0 0.0 0.0 0.0
   EMISFACT L0002046     HRDOW 0.0 0.0 0.0 0.0 0.0 0.0
   EMISFACT L0002046     HRDOW 0.0 0.0 0.0 0.0 0.0 0.0
   EMISFACT L0002046     HRDOW 0.0 0.0 0.0 0.0 0.0 0.0
   EMISFACT L0002047     HRDOW 0.0 0.0 0.0 0.0 0.0 0.0
   EMISFACT L0002047     HRDOW 0.0 0.0 0.0 0.0 0.0 0.0
   EMISFACT L0002047     HRDOW 0.0 0.0 0.0 0.0 0.0 0.0
   EMISFACT L0002047     HRDOW 0.0 0.0 0.0 0.0 0.0 0.0
   EMISFACT L0002048     HRDOW 0.0 0.0 0.0 0.0 0.0 0.0
   EMISFACT L0002048     HRDOW 0.0 0.0 0.0 0.0 0.0 0.0
   EMISFACT L0002048     HRDOW 0.0 0.0 0.0 0.0 0.0 0.0
   EMISFACT L0002048     HRDOW 0.0 0.0 0.0 0.0 0.0 0.0
   EMISFACT L0002049     HRDOW 0.0 0.0 0.0 0.0 0.0 0.0
   EMISFACT L0002049     HRDOW 0.0 0.0 0.0 0.0 0.0 0.0
   EMISFACT L0002049     HRDOW 0.0 0.0 0.0 0.0 0.0 0.0
   EMISFACT L0002049     HRDOW 0.0 0.0 0.0 0.0 0.0 0.0
   EMISFACT L0002050     HRDOW 0.0 0.0 0.0 0.0 0.0 0.0
   EMISFACT L0002050     HRDOW 0.0 0.0 0.0 0.0 0.0 0.0
   EMISFACT L0002050     HRDOW 0.0 0.0 0.0 0.0 0.0 0.0
   EMISFACT L0002050     HRDOW 0.0 0.0 0.0 0.0 0.0 0.0
   EMISFACT L0002051     HRDOW 0.0 0.0 0.0 0.0 0.0 0.0
   EMISFACT L0002051     HRDOW 0.0 0.0 0.0 0.0 0.0 0.0
   EMISFACT L0002051     HRDOW 0.0 0.0 0.0 0.0 0.0 0.0
   EMISFACT L0002051     HRDOW 0.0 0.0 0.0 0.0 0.0 0.0
   EMISFACT L0002052     HRDOW 0.0 0.0 0.0 0.0 0.0 0.0
   EMISFACT L0002052     HRDOW 0.0 0.0 0.0 0.0 0.0 0.0
   EMISFACT L0002052     HRDOW 0.0 0.0 0.0 0.0 0.0 0.0
   EMISFACT L0002052     HRDOW 0.0 0.0 0.0 0.0 0.0 0.0
   EMISFACT L0002053     HRDOW 0.0 0.0 0.0 0.0 0.0 0.0
   EMISFACT L0002053     HRDOW 0.0 0.0 0.0 0.0 0.0 0.0
   EMISFACT L0002053     HRDOW 0.0 0.0 0.0 0.0 0.0 0.0
   EMISFACT L0002053     HRDOW 0.0 0.0 0.0 0.0 0.0 0.0
   EMISFACT L0002054     HRDOW 0.0 0.0 0.0 0.0 0.0 0.0
   EMISFACT L0002054     HRDOW 0.0 0.0 0.0 0.0 0.0 0.0
   EMISFACT L0002054     HRDOW 0.0 0.0 0.0 0.0 0.0 0.0
   EMISFACT L0002054     HRDOW 0.0 0.0 0.0 0.0 0.0 0.0
   EMISFACT L0002055     HRDOW 0.0 0.0 0.0 0.0 0.0 0.0
```

```
   EMISFACT L0002055     HRDOW 0.0 0.0 0.0 0.0 0.0 0.0
   EMISFACT L0002055     HRDOW 0.0 0.0 0.0 0.0 0.0 0.0
   EMISFACT L0002055     HRDOW 0.0 0.0 0.0 0.0 0.0 0.0
** WeekDays:
   EMISFACT L0002056     HRDOW 0.0 0.0 0.0 0.0 0.0 0.0
   EMISFACT L0002056     HRDOW 1.0 1.0 1.0 1.0 1.0 1.0
   EMISFACT L0002056     HRDOW 1.0 1.0 1.0 1.0 0.0 0.0
   EMISFACT L0002056     HRDOW 0.0 0.0 0.0 0.0 0.0 0.0
   EMISFACT L0002057     HRDOW 0.0 0.0 0.0 0.0 0.0 0.0
   EMISFACT L0002057     HRDOW 1.0 1.0 1.0 1.0 1.0 1.0
   EMISFACT L0002057     HRDOW 1.0 1.0 1.0 1.0 0.0 0.0
   EMISFACT L0002057     HRDOW 0.0 0.0 0.0 0.0 0.0 0.0
   EMISFACT L0002058     HRDOW 0.0 0.0 0.0 0.0 0.0 0.0
   EMISFACT L0002058     HRDOW 1.0 1.0 1.0 1.0 1.0 1.0
   EMISFACT L0002058     HRDOW 1.0 1.0 1.0 1.0 0.0 0.0
   EMISFACT L0002058     HRDOW 0.0 0.0 0.0 0.0 0.0 0.0
   EMISFACT L0002059     HRDOW 0.0 0.0 0.0 0.0 0.0 0.0
   EMISFACT L0002059     HRDOW 1.0 1.0 1.0 1.0 1.0 1.0
   EMISFACT L0002059     HRDOW 1.0 1.0 1.0 1.0 0.0 0.0
   EMISFACT L0002059     HRDOW 0.0 0.0 0.0 0.0 0.0 0.0
   EMISFACT L0002060     HRDOW 0.0 0.0 0.0 0.0 0.0 0.0
   EMISFACT L0002060     HRDOW 1.0 1.0 1.0 1.0 1.0 1.0
   EMISFACT L0002060     HRDOW 1.0 1.0 1.0 1.0 0.0 0.0
   EMISFACT L0002060     HRDOW 0.0 0.0 0.0 0.0 0.0 0.0
   EMISFACT L0002061     HRDOW 0.0 0.0 0.0 0.0 0.0 0.0
   EMISFACT L0002061     HRDOW 1.0 1.0 1.0 1.0 1.0 1.0
   EMISFACT L0002061     HRDOW 1.0 1.0 1.0 1.0 0.0 0.0
   EMISFACT L0002061     HRDOW 0.0 0.0 0.0 0.0 0.0 0.0
   EMISFACT L0002062     HRDOW 0.0 0.0 0.0 0.0 0.0 0.0
   EMISFACT L0002062     HRDOW 1.0 1.0 1.0 1.0 1.0 1.0
   EMISFACT L0002062     HRDOW 1.0 1.0 1.0 1.0 0.0 0.0
   EMISFACT L0002062     HRDOW 0.0 0.0 0.0 0.0 0.0 0.0
   EMISFACT L0002063     HRDOW 0.0 0.0 0.0 0.0 0.0 0.0
   EMISFACT L0002063     HRDOW 1.0 1.0 1.0 1.0 1.0 1.0
   EMISFACT L0002063     HRDOW 1.0 1.0 1.0 1.0 0.0 0.0
   EMISFACT L0002063     HRDOW 0.0 0.0 0.0 0.0 0.0 0.0
   EMISFACT L0002064     HRDOW 0.0 0.0 0.0 0.0 0.0 0.0
   EMISFACT L0002064     HRDOW 1.0 1.0 1.0 1.0 1.0 1.0
   EMISFACT L0002064     HRDOW 1.0 1.0 1.0 1.0 0.0 0.0
   EMISFACT L0002064     HRDOW 0.0 0.0 0.0 0.0 0.0 0.0
   EMISFACT L0002065     HRDOW 0.0 0.0 0.0 0.0 0.0 0.0
   EMISFACT L0002065     HRDOW 1.0 1.0 1.0 1.0 1.0 1.0
   EMISFACT L0002065     HRDOW 1.0 1.0 1.0 1.0 0.0 0.0
   EMISFACT L0002065     HRDOW 0.0 0.0 0.0 0.0 0.0 0.0
   EMISFACT L0002066     HRDOW 0.0 0.0 0.0 0.0 0.0 0.0
   EMISFACT L0002066     HRDOW 1.0 1.0 1.0 1.0 1.0 1.0
   EMISFACT L0002066     HRDOW 1.0 1.0 1.0 1.0 0.0 0.0
   EMISFACT L0002066     HRDOW 0.0 0.0 0.0 0.0 0.0 0.0
   EMISFACT L0002067     HRDOW 0.0 0.0 0.0 0.0 0.0 0.0
   EMISFACT L0002067     HRDOW 1.0 1.0 1.0 1.0 1.0 1.0
   EMISFACT L0002067     HRDOW 1.0 1.0 1.0 1.0 0.0 0.0
   EMISFACT L0002067     HRDOW 0.0 0.0 0.0 0.0 0.0 0.0
   EMISFACT L0002068     HRDOW 0.0 0.0 0.0 0.0 0.0 0.0
   EMISFACT L0002068     HRDOW 1.0 1.0 1.0 1.0 1.0 1.0
   EMISFACT L0002068     HRDOW 1.0 1.0 1.0 1.0 0.0 0.0
   EMISFACT L0002068     HRDOW 0.0 0.0 0.0 0.0 0.0 0.0
** Saturday:
   EMISFACT L0002056     HRDOW 0.0 0.0 0.0 0.0 0.0 0.0
   EMISFACT L0002056     HRDOW 0.0 0.0 0.0 0.0 0.0 0.0
```

```
   EMISFACT L0002056     HRDOW 0.0 0.0 0.0 0.0 0.0 0.0
   EMISFACT L0002056     HRDOW 0.0 0.0 0.0 0.0 0.0 0.0
   EMISFACT L0002057     HRDOW 0.0 0.0 0.0 0.0 0.0 0.0
   EMISFACT L0002057     HRDOW 0.0 0.0 0.0 0.0 0.0 0.0
   EMISFACT L0002057     HRDOW 0.0 0.0 0.0 0.0 0.0 0.0
   EMISFACT L0002057     HRDOW 0.0 0.0 0.0 0.0 0.0 0.0
   EMISFACT L0002058     HRDOW 0.0 0.0 0.0 0.0 0.0 0.0
   EMISFACT L0002058     HRDOW 0.0 0.0 0.0 0.0 0.0 0.0
   EMISFACT L0002058     HRDOW 0.0 0.0 0.0 0.0 0.0 0.0
   EMISFACT L0002058     HRDOW 0.0 0.0 0.0 0.0 0.0 0.0
   EMISFACT L0002059     HRDOW 0.0 0.0 0.0 0.0 0.0 0.0
   EMISFACT L0002059     HRDOW 0.0 0.0 0.0 0.0 0.0 0.0
   EMISFACT L0002059     HRDOW 0.0 0.0 0.0 0.0 0.0 0.0
   EMISFACT L0002059     HRDOW 0.0 0.0 0.0 0.0 0.0 0.0
   EMISFACT L0002060     HRDOW 0.0 0.0 0.0 0.0 0.0 0.0
   EMISFACT L0002060     HRDOW 0.0 0.0 0.0 0.0 0.0 0.0
   EMISFACT L0002060     HRDOW 0.0 0.0 0.0 0.0 0.0 0.0
   EMISFACT L0002060     HRDOW 0.0 0.0 0.0 0.0 0.0 0.0
   EMISFACT L0002061     HRDOW 0.0 0.0 0.0 0.0 0.0 0.0
   EMISFACT L0002061     HRDOW 0.0 0.0 0.0 0.0 0.0 0.0
   EMISFACT L0002061     HRDOW 0.0 0.0 0.0 0.0 0.0 0.0
   EMISFACT L0002061     HRDOW 0.0 0.0 0.0 0.0 0.0 0.0
   EMISFACT L0002062     HRDOW 0.0 0.0 0.0 0.0 0.0 0.0
   EMISFACT L0002062     HRDOW 0.0 0.0 0.0 0.0 0.0 0.0
   EMISFACT L0002062     HRDOW 0.0 0.0 0.0 0.0 0.0 0.0
   EMISFACT L0002062     HRDOW 0.0 0.0 0.0 0.0 0.0 0.0
   EMISFACT L0002063     HRDOW 0.0 0.0 0.0 0.0 0.0 0.0
   EMISFACT L0002063     HRDOW 0.0 0.0 0.0 0.0 0.0 0.0
   EMISFACT L0002063     HRDOW 0.0 0.0 0.0 0.0 0.0 0.0
   EMISFACT L0002063     HRDOW 0.0 0.0 0.0 0.0 0.0 0.0
   EMISFACT L0002064     HRDOW 0.0 0.0 0.0 0.0 0.0 0.0
   EMISFACT L0002064     HRDOW 0.0 0.0 0.0 0.0 0.0 0.0
   EMISFACT L0002064     HRDOW 0.0 0.0 0.0 0.0 0.0 0.0
   EMISFACT L0002064     HRDOW 0.0 0.0 0.0 0.0 0.0 0.0
   EMISFACT L0002065     HRDOW 0.0 0.0 0.0 0.0 0.0 0.0
   EMISFACT L0002065     HRDOW 0.0 0.0 0.0 0.0 0.0 0.0
   EMISFACT L0002065     HRDOW 0.0 0.0 0.0 0.0 0.0 0.0
   EMISFACT L0002065     HRDOW 0.0 0.0 0.0 0.0 0.0 0.0
   EMISFACT L0002066     HRDOW 0.0 0.0 0.0 0.0 0.0 0.0
   EMISFACT L0002066     HRDOW 0.0 0.0 0.0 0.0 0.0 0.0
   EMISFACT L0002066     HRDOW 0.0 0.0 0.0 0.0 0.0 0.0
   EMISFACT L0002066     HRDOW 0.0 0.0 0.0 0.0 0.0 0.0
   EMISFACT L0002067     HRDOW 0.0 0.0 0.0 0.0 0.0 0.0
   EMISFACT L0002067     HRDOW 0.0 0.0 0.0 0.0 0.0 0.0
   EMISFACT L0002067     HRDOW 0.0 0.0 0.0 0.0 0.0 0.0
   EMISFACT L0002067     HRDOW 0.0 0.0 0.0 0.0 0.0 0.0
   EMISFACT L0002068     HRDOW 0.0 0.0 0.0 0.0 0.0 0.0
   EMISFACT L0002068     HRDOW 0.0 0.0 0.0 0.0 0.0 0.0
   EMISFACT L0002068     HRDOW 0.0 0.0 0.0 0.0 0.0 0.0
   EMISFACT L0002068     HRDOW 0.0 0.0 0.0 0.0 0.0 0.0
** Sunday:
   EMISFACT L0002056     HRDOW 0.0 0.0 0.0 0.0 0.0 0.0
   EMISFACT L0002056     HRDOW 0.0 0.0 0.0 0.0 0.0 0.0
   EMISFACT L0002056     HRDOW 0.0 0.0 0.0 0.0 0.0 0.0
   EMISFACT L0002056     HRDOW 0.0 0.0 0.0 0.0 0.0 0.0
   EMISFACT L0002057     HRDOW 0.0 0.0 0.0 0.0 0.0 0.0
   EMISFACT L0002057     HRDOW 0.0 0.0 0.0 0.0 0.0 0.0
   EMISFACT L0002057     HRDOW 0.0 0.0 0.0 0.0 0.0 0.0
   EMISFACT L0002057     HRDOW 0.0 0.0 0.0 0.0 0.0 0.0
```

```
   EMISFACT L0002058     HRDOW 0.0 0.0 0.0 0.0 0.0 0.0
   EMISFACT L0002058     HRDOW 0.0 0.0 0.0 0.0 0.0 0.0
   EMISFACT L0002058     HRDOW 0.0 0.0 0.0 0.0 0.0 0.0
   EMISFACT L0002058     HRDOW 0.0 0.0 0.0 0.0 0.0 0.0
   EMISFACT L0002059     HRDOW 0.0 0.0 0.0 0.0 0.0 0.0
   EMISFACT L0002059     HRDOW 0.0 0.0 0.0 0.0 0.0 0.0
   EMISFACT L0002059     HRDOW 0.0 0.0 0.0 0.0 0.0 0.0
   EMISFACT L0002059     HRDOW 0.0 0.0 0.0 0.0 0.0 0.0
   EMISFACT L0002060     HRDOW 0.0 0.0 0.0 0.0 0.0 0.0
   EMISFACT L0002060     HRDOW 0.0 0.0 0.0 0.0 0.0 0.0
   EMISFACT L0002060     HRDOW 0.0 0.0 0.0 0.0 0.0 0.0
   EMISFACT L0002060     HRDOW 0.0 0.0 0.0 0.0 0.0 0.0
   EMISFACT L0002061     HRDOW 0.0 0.0 0.0 0.0 0.0 0.0
   EMISFACT L0002061     HRDOW 0.0 0.0 0.0 0.0 0.0 0.0
   EMISFACT L0002061     HRDOW 0.0 0.0 0.0 0.0 0.0 0.0
   EMISFACT L0002061     HRDOW 0.0 0.0 0.0 0.0 0.0 0.0
   EMISFACT L0002062     HRDOW 0.0 0.0 0.0 0.0 0.0 0.0
   EMISFACT L0002062     HRDOW 0.0 0.0 0.0 0.0 0.0 0.0
   EMISFACT L0002062     HRDOW 0.0 0.0 0.0 0.0 0.0 0.0
   EMISFACT L0002062     HRDOW 0.0 0.0 0.0 0.0 0.0 0.0
   EMISFACT L0002063     HRDOW 0.0 0.0 0.0 0.0 0.0 0.0
   EMISFACT L0002063     HRDOW 0.0 0.0 0.0 0.0 0.0 0.0
   EMISFACT L0002063     HRDOW 0.0 0.0 0.0 0.0 0.0 0.0
   EMISFACT L0002063     HRDOW 0.0 0.0 0.0 0.0 0.0 0.0
   EMISFACT L0002064     HRDOW 0.0 0.0 0.0 0.0 0.0 0.0
   EMISFACT L0002064     HRDOW 0.0 0.0 0.0 0.0 0.0 0.0
   EMISFACT L0002064     HRDOW 0.0 0.0 0.0 0.0 0.0 0.0
   EMISFACT L0002064     HRDOW 0.0 0.0 0.0 0.0 0.0 0.0
   EMISFACT L0002065     HRDOW 0.0 0.0 0.0 0.0 0.0 0.0
   EMISFACT L0002065     HRDOW 0.0 0.0 0.0 0.0 0.0 0.0
   EMISFACT L0002065     HRDOW 0.0 0.0 0.0 0.0 0.0 0.0
   EMISFACT L0002065     HRDOW 0.0 0.0 0.0 0.0 0.0 0.0
   EMISFACT L0002066     HRDOW 0.0 0.0 0.0 0.0 0.0 0.0
   EMISFACT L0002066     HRDOW 0.0 0.0 0.0 0.0 0.0 0.0
   EMISFACT L0002066     HRDOW 0.0 0.0 0.0 0.0 0.0 0.0
   EMISFACT L0002066     HRDOW 0.0 0.0 0.0 0.0 0.0 0.0
   EMISFACT L0002067     HRDOW 0.0 0.0 0.0 0.0 0.0 0.0
   EMISFACT L0002067     HRDOW 0.0 0.0 0.0 0.0 0.0 0.0
   EMISFACT L0002067     HRDOW 0.0 0.0 0.0 0.0 0.0 0.0
   EMISFACT L0002067     HRDOW 0.0 0.0 0.0 0.0 0.0 0.0
   EMISFACT L0002068     HRDOW 0.0 0.0 0.0 0.0 0.0 0.0
   EMISFACT L0002068     HRDOW 0.0 0.0 0.0 0.0 0.0 0.0
   EMISFACT L0002068     HRDOW 0.0 0.0 0.0 0.0 0.0 0.0
   EMISFACT L0002068     HRDOW 0.0 0.0 0.0 0.0 0.0 0.0
** WeekDays:
   EMISFACT L0002069     HRDOW 0.0 0.0 0.0 0.0 0.0 0.0
   EMISFACT L0002069     HRDOW 1.0 1.0 1.0 1.0 1.0 1.0
   EMISFACT L0002069     HRDOW 1.0 1.0 1.0 1.0 0.0 0.0
   EMISFACT L0002069     HRDOW 0.0 0.0 0.0 0.0 0.0 0.0
   EMISFACT L0002070     HRDOW 0.0 0.0 0.0 0.0 0.0 0.0
   EMISFACT L0002070     HRDOW 1.0 1.0 1.0 1.0 1.0 1.0
   EMISFACT L0002070     HRDOW 1.0 1.0 1.0 1.0 0.0 0.0
   EMISFACT L0002070     HRDOW 0.0 0.0 0.0 0.0 0.0 0.0
   EMISFACT L0002071     HRDOW 0.0 0.0 0.0 0.0 0.0 0.0
   EMISFACT L0002071     HRDOW 1.0 1.0 1.0 1.0 1.0 1.0
   EMISFACT L0002071     HRDOW 1.0 1.0 1.0 1.0 0.0 0.0
   EMISFACT L0002071     HRDOW 0.0 0.0 0.0 0.0 0.0 0.0
   EMISFACT L0002072     HRDOW 0.0 0.0 0.0 0.0 0.0 0.0
   EMISFACT L0002072     HRDOW 1.0 1.0 1.0 1.0 1.0 1.0
```

```
   EMISFACT L0002072     HRDOW 1.0 1.0 1.0 1.0 0.0 0.0
   EMISFACT L0002072     HRDOW 0.0 0.0 0.0 0.0 0.0 0.0
   EMISFACT L0002073     HRDOW 0.0 0.0 0.0 0.0 0.0 0.0
   EMISFACT L0002073     HRDOW 1.0 1.0 1.0 1.0 1.0 1.0
   EMISFACT L0002073     HRDOW 1.0 1.0 1.0 1.0 0.0 0.0
   EMISFACT L0002073     HRDOW 0.0 0.0 0.0 0.0 0.0 0.0
   EMISFACT L0002074     HRDOW 0.0 0.0 0.0 0.0 0.0 0.0
   EMISFACT L0002074     HRDOW 1.0 1.0 1.0 1.0 1.0 1.0
   EMISFACT L0002074     HRDOW 1.0 1.0 1.0 1.0 0.0 0.0
   EMISFACT L0002074     HRDOW 0.0 0.0 0.0 0.0 0.0 0.0
   EMISFACT L0002075     HRDOW 0.0 0.0 0.0 0.0 0.0 0.0
   EMISFACT L0002075     HRDOW 1.0 1.0 1.0 1.0 1.0 1.0
   EMISFACT L0002075     HRDOW 1.0 1.0 1.0 1.0 0.0 0.0
   EMISFACT L0002075     HRDOW 0.0 0.0 0.0 0.0 0.0 0.0
   EMISFACT L0002076     HRDOW 0.0 0.0 0.0 0.0 0.0 0.0
   EMISFACT L0002076     HRDOW 1.0 1.0 1.0 1.0 1.0 1.0
   EMISFACT L0002076     HRDOW 1.0 1.0 1.0 1.0 0.0 0.0
   EMISFACT L0002076     HRDOW 0.0 0.0 0.0 0.0 0.0 0.0
   EMISFACT L0002077     HRDOW 0.0 0.0 0.0 0.0 0.0 0.0
   EMISFACT L0002077     HRDOW 1.0 1.0 1.0 1.0 1.0 1.0
   EMISFACT L0002077     HRDOW 1.0 1.0 1.0 1.0 0.0 0.0
   EMISFACT L0002077     HRDOW 0.0 0.0 0.0 0.0 0.0 0.0
   EMISFACT L0002078     HRDOW 0.0 0.0 0.0 0.0 0.0 0.0
   EMISFACT L0002078     HRDOW 1.0 1.0 1.0 1.0 1.0 1.0
   EMISFACT L0002078     HRDOW 1.0 1.0 1.0 1.0 0.0 0.0
   EMISFACT L0002078     HRDOW 0.0 0.0 0.0 0.0 0.0 0.0
   EMISFACT L0002079     HRDOW 0.0 0.0 0.0 0.0 0.0 0.0
   EMISFACT L0002079     HRDOW 1.0 1.0 1.0 1.0 1.0 1.0
   EMISFACT L0002079     HRDOW 1.0 1.0 1.0 1.0 0.0 0.0
   EMISFACT L0002079     HRDOW 0.0 0.0 0.0 0.0 0.0 0.0
   EMISFACT L0002080     HRDOW 0.0 0.0 0.0 0.0 0.0 0.0
   EMISFACT L0002080     HRDOW 1.0 1.0 1.0 1.0 1.0 1.0
   EMISFACT L0002080     HRDOW 1.0 1.0 1.0 1.0 0.0 0.0
   EMISFACT L0002080     HRDOW 0.0 0.0 0.0 0.0 0.0 0.0
   EMISFACT L0002081     HRDOW 0.0 0.0 0.0 0.0 0.0 0.0
   EMISFACT L0002081     HRDOW 1.0 1.0 1.0 1.0 1.0 1.0
   EMISFACT L0002081     HRDOW 1.0 1.0 1.0 1.0 0.0 0.0
   EMISFACT L0002081     HRDOW 0.0 0.0 0.0 0.0 0.0 0.0
   EMISFACT L0002082     HRDOW 0.0 0.0 0.0 0.0 0.0 0.0
   EMISFACT L0002082     HRDOW 1.0 1.0 1.0 1.0 1.0 1.0
   EMISFACT L0002082     HRDOW 1.0 1.0 1.0 1.0 0.0 0.0
   EMISFACT L0002082     HRDOW 0.0 0.0 0.0 0.0 0.0 0.0
   EMISFACT L0002083     HRDOW 0.0 0.0 0.0 0.0 0.0 0.0
   EMISFACT L0002083     HRDOW 1.0 1.0 1.0 1.0 1.0 1.0
   EMISFACT L0002083     HRDOW 1.0 1.0 1.0 1.0 0.0 0.0
   EMISFACT L0002083     HRDOW 0.0 0.0 0.0 0.0 0.0 0.0
   EMISFACT L0002084     HRDOW 0.0 0.0 0.0 0.0 0.0 0.0
   EMISFACT L0002084     HRDOW 1.0 1.0 1.0 1.0 1.0 1.0
   EMISFACT L0002084     HRDOW 1.0 1.0 1.0 1.0 0.0 0.0
   EMISFACT L0002084     HRDOW 0.0 0.0 0.0 0.0 0.0 0.0
   EMISFACT L0002085     HRDOW 0.0 0.0 0.0 0.0 0.0 0.0
   EMISFACT L0002085     HRDOW 1.0 1.0 1.0 1.0 1.0 1.0
   EMISFACT L0002085     HRDOW 1.0 1.0 1.0 1.0 0.0 0.0
   EMISFACT L0002085     HRDOW 0.0 0.0 0.0 0.0 0.0 0.0
   EMISFACT L0002086     HRDOW 0.0 0.0 0.0 0.0 0.0 0.0
   EMISFACT L0002086     HRDOW 1.0 1.0 1.0 1.0 1.0 1.0
   EMISFACT L0002086     HRDOW 1.0 1.0 1.0 1.0 0.0 0.0
   EMISFACT L0002086     HRDOW 0.0 0.0 0.0 0.0 0.0 0.0
** Saturday:
```

```
EMISFACT L0002069     HRDOW 0.0 0.0 0.0 0.0 0.0 0.0
EMISFACT L0002069     HRDOW 0.0 0.0 0.0 0.0 0.0 0.0
EMISFACT L0002069     HRDOW 0.0 0.0 0.0 0.0 0.0 0.0
EMISFACT L0002069     HRDOW 0.0 0.0 0.0 0.0 0.0 0.0
EMISFACT L0002070     HRDOW 0.0 0.0 0.0 0.0 0.0 0.0
EMISFACT L0002070     HRDOW 0.0 0.0 0.0 0.0 0.0 0.0
EMISFACT L0002070     HRDOW 0.0 0.0 0.0 0.0 0.0 0.0
EMISFACT L0002070     HRDOW 0.0 0.0 0.0 0.0 0.0 0.0
EMISFACT L0002071     HRDOW 0.0 0.0 0.0 0.0 0.0 0.0
EMISFACT L0002071     HRDOW 0.0 0.0 0.0 0.0 0.0 0.0
EMISFACT L0002071     HRDOW 0.0 0.0 0.0 0.0 0.0 0.0
EMISFACT L0002071     HRDOW 0.0 0.0 0.0 0.0 0.0 0.0
EMISFACT L0002072     HRDOW 0.0 0.0 0.0 0.0 0.0 0.0
EMISFACT L0002072     HRDOW 0.0 0.0 0.0 0.0 0.0 0.0
EMISFACT L0002072     HRDOW 0.0 0.0 0.0 0.0 0.0 0.0
EMISFACT L0002072     HRDOW 0.0 0.0 0.0 0.0 0.0 0.0
EMISFACT L0002073     HRDOW 0.0 0.0 0.0 0.0 0.0 0.0
EMISFACT L0002073     HRDOW 0.0 0.0 0.0 0.0 0.0 0.0
EMISFACT L0002073     HRDOW 0.0 0.0 0.0 0.0 0.0 0.0
EMISFACT L0002073     HRDOW 0.0 0.0 0.0 0.0 0.0 0.0
EMISFACT L0002074     HRDOW 0.0 0.0 0.0 0.0 0.0 0.0
EMISFACT L0002074     HRDOW 0.0 0.0 0.0 0.0 0.0 0.0
EMISFACT L0002074     HRDOW 0.0 0.0 0.0 0.0 0.0 0.0
EMISFACT L0002074     HRDOW 0.0 0.0 0.0 0.0 0.0 0.0
EMISFACT L0002075     HRDOW 0.0 0.0 0.0 0.0 0.0 0.0
EMISFACT L0002075     HRDOW 0.0 0.0 0.0 0.0 0.0 0.0
EMISFACT L0002075     HRDOW 0.0 0.0 0.0 0.0 0.0 0.0
EMISFACT L0002075     HRDOW 0.0 0.0 0.0 0.0 0.0 0.0
EMISFACT L0002076     HRDOW 0.0 0.0 0.0 0.0 0.0 0.0
EMISFACT L0002076     HRDOW 0.0 0.0 0.0 0.0 0.0 0.0
EMISFACT L0002076     HRDOW 0.0 0.0 0.0 0.0 0.0 0.0
EMISFACT L0002076     HRDOW 0.0 0.0 0.0 0.0 0.0 0.0
EMISFACT L0002077     HRDOW 0.0 0.0 0.0 0.0 0.0 0.0
EMISFACT L0002077     HRDOW 0.0 0.0 0.0 0.0 0.0 0.0
EMISFACT L0002077     HRDOW 0.0 0.0 0.0 0.0 0.0 0.0
EMISFACT L0002077     HRDOW 0.0 0.0 0.0 0.0 0.0 0.0
EMISFACT L0002078     HRDOW 0.0 0.0 0.0 0.0 0.0 0.0
EMISFACT L0002078     HRDOW 0.0 0.0 0.0 0.0 0.0 0.0
EMISFACT L0002078     HRDOW 0.0 0.0 0.0 0.0 0.0 0.0
EMISFACT L0002078     HRDOW 0.0 0.0 0.0 0.0 0.0 0.0
EMISFACT L0002079     HRDOW 0.0 0.0 0.0 0.0 0.0 0.0
EMISFACT L0002079     HRDOW 0.0 0.0 0.0 0.0 0.0 0.0
EMISFACT L0002079     HRDOW 0.0 0.0 0.0 0.0 0.0 0.0
EMISFACT L0002079     HRDOW 0.0 0.0 0.0 0.0 0.0 0.0
EMISFACT L0002080     HRDOW 0.0 0.0 0.0 0.0 0.0 0.0
EMISFACT L0002080     HRDOW 0.0 0.0 0.0 0.0 0.0 0.0
EMISFACT L0002080     HRDOW 0.0 0.0 0.0 0.0 0.0 0.0
EMISFACT L0002080     HRDOW 0.0 0.0 0.0 0.0 0.0 0.0
EMISFACT L0002081     HRDOW 0.0 0.0 0.0 0.0 0.0 0.0
EMISFACT L0002081     HRDOW 0.0 0.0 0.0 0.0 0.0 0.0
EMISFACT L0002081     HRDOW 0.0 0.0 0.0 0.0 0.0 0.0
EMISFACT L0002081     HRDOW 0.0 0.0 0.0 0.0 0.0 0.0
EMISFACT L0002082     HRDOW 0.0 0.0 0.0 0.0 0.0 0.0
EMISFACT L0002082     HRDOW 0.0 0.0 0.0 0.0 0.0 0.0
EMISFACT L0002082     HRDOW 0.0 0.0 0.0 0.0 0.0 0.0
EMISFACT L0002082     HRDOW 0.0 0.0 0.0 0.0 0.0 0.0
EMISFACT L0002083     HRDOW 0.0 0.0 0.0 0.0 0.0 0.0
EMISFACT L0002083     HRDOW 0.0 0.0 0.0 0.0 0.0 0.0
EMISFACT L0002083     HRDOW 0.0 0.0 0.0 0.0 0.0 0.0
```

```
   EMISFACT L0002083     HRDOW 0.0 0.0 0.0 0.0 0.0 0.0
   EMISFACT L0002084     HRDOW 0.0 0.0 0.0 0.0 0.0 0.0
   EMISFACT L0002084     HRDOW 0.0 0.0 0.0 0.0 0.0 0.0
   EMISFACT L0002084     HRDOW 0.0 0.0 0.0 0.0 0.0 0.0
   EMISFACT L0002084     HRDOW 0.0 0.0 0.0 0.0 0.0 0.0
   EMISFACT L0002085     HRDOW 0.0 0.0 0.0 0.0 0.0 0.0
   EMISFACT L0002085     HRDOW 0.0 0.0 0.0 0.0 0.0 0.0
   EMISFACT L0002085     HRDOW 0.0 0.0 0.0 0.0 0.0 0.0
   EMISFACT L0002085     HRDOW 0.0 0.0 0.0 0.0 0.0 0.0
   EMISFACT L0002086     HRDOW 0.0 0.0 0.0 0.0 0.0 0.0
   EMISFACT L0002086     HRDOW 0.0 0.0 0.0 0.0 0.0 0.0
   EMISFACT L0002086     HRDOW 0.0 0.0 0.0 0.0 0.0 0.0
   EMISFACT L0002086     HRDOW 0.0 0.0 0.0 0.0 0.0 0.0
** Sunday:
   EMISFACT L0002069     HRDOW 0.0 0.0 0.0 0.0 0.0 0.0
   EMISFACT L0002069     HRDOW 0.0 0.0 0.0 0.0 0.0 0.0
   EMISFACT L0002069     HRDOW 0.0 0.0 0.0 0.0 0.0 0.0
   EMISFACT L0002069     HRDOW 0.0 0.0 0.0 0.0 0.0 0.0
   EMISFACT L0002070     HRDOW 0.0 0.0 0.0 0.0 0.0 0.0
   EMISFACT L0002070     HRDOW 0.0 0.0 0.0 0.0 0.0 0.0
   EMISFACT L0002070     HRDOW 0.0 0.0 0.0 0.0 0.0 0.0
   EMISFACT L0002070     HRDOW 0.0 0.0 0.0 0.0 0.0 0.0
   EMISFACT L0002071     HRDOW 0.0 0.0 0.0 0.0 0.0 0.0
   EMISFACT L0002071     HRDOW 0.0 0.0 0.0 0.0 0.0 0.0
   EMISFACT L0002071     HRDOW 0.0 0.0 0.0 0.0 0.0 0.0
   EMISFACT L0002071     HRDOW 0.0 0.0 0.0 0.0 0.0 0.0
   EMISFACT L0002072     HRDOW 0.0 0.0 0.0 0.0 0.0 0.0
   EMISFACT L0002072     HRDOW 0.0 0.0 0.0 0.0 0.0 0.0
   EMISFACT L0002072     HRDOW 0.0 0.0 0.0 0.0 0.0 0.0
   EMISFACT L0002072     HRDOW 0.0 0.0 0.0 0.0 0.0 0.0
   EMISFACT L0002073     HRDOW 0.0 0.0 0.0 0.0 0.0 0.0
   EMISFACT L0002073     HRDOW 0.0 0.0 0.0 0.0 0.0 0.0
   EMISFACT L0002073     HRDOW 0.0 0.0 0.0 0.0 0.0 0.0
   EMISFACT L0002073     HRDOW 0.0 0.0 0.0 0.0 0.0 0.0
   EMISFACT L0002074     HRDOW 0.0 0.0 0.0 0.0 0.0 0.0
   EMISFACT L0002074     HRDOW 0.0 0.0 0.0 0.0 0.0 0.0
   EMISFACT L0002074     HRDOW 0.0 0.0 0.0 0.0 0.0 0.0
   EMISFACT L0002074     HRDOW 0.0 0.0 0.0 0.0 0.0 0.0
   EMISFACT L0002075     HRDOW 0.0 0.0 0.0 0.0 0.0 0.0
   EMISFACT L0002075     HRDOW 0.0 0.0 0.0 0.0 0.0 0.0
   EMISFACT L0002075     HRDOW 0.0 0.0 0.0 0.0 0.0 0.0
   EMISFACT L0002075     HRDOW 0.0 0.0 0.0 0.0 0.0 0.0
   EMISFACT L0002076     HRDOW 0.0 0.0 0.0 0.0 0.0 0.0
   EMISFACT L0002076     HRDOW 0.0 0.0 0.0 0.0 0.0 0.0
   EMISFACT L0002076     HRDOW 0.0 0.0 0.0 0.0 0.0 0.0
   EMISFACT L0002076     HRDOW 0.0 0.0 0.0 0.0 0.0 0.0
   EMISFACT L0002077     HRDOW 0.0 0.0 0.0 0.0 0.0 0.0
   EMISFACT L0002077     HRDOW 0.0 0.0 0.0 0.0 0.0 0.0
   EMISFACT L0002077     HRDOW 0.0 0.0 0.0 0.0 0.0 0.0
   EMISFACT L0002077     HRDOW 0.0 0.0 0.0 0.0 0.0 0.0
   EMISFACT L0002078     HRDOW 0.0 0.0 0.0 0.0 0.0 0.0
   EMISFACT L0002078     HRDOW 0.0 0.0 0.0 0.0 0.0 0.0
   EMISFACT L0002078     HRDOW 0.0 0.0 0.0 0.0 0.0 0.0
   EMISFACT L0002078     HRDOW 0.0 0.0 0.0 0.0 0.0 0.0
   EMISFACT L0002079     HRDOW 0.0 0.0 0.0 0.0 0.0 0.0
   EMISFACT L0002079     HRDOW 0.0 0.0 0.0 0.0 0.0 0.0
   EMISFACT L0002079     HRDOW 0.0 0.0 0.0 0.0 0.0 0.0
   EMISFACT L0002079     HRDOW 0.0 0.0 0.0 0.0 0.0 0.0
   EMISFACT L0002080     HRDOW 0.0 0.0 0.0 0.0 0.0 0.0
```

```
   EMISFACT L0002080     HRDOW 0.0 0.0 0.0 0.0 0.0 0.0
   EMISFACT L0002080     HRDOW 0.0 0.0 0.0 0.0 0.0 0.0
   EMISFACT L0002080     HRDOW 0.0 0.0 0.0 0.0 0.0 0.0
   EMISFACT L0002081     HRDOW 0.0 0.0 0.0 0.0 0.0 0.0
   EMISFACT L0002081     HRDOW 0.0 0.0 0.0 0.0 0.0 0.0
   EMISFACT L0002081     HRDOW 0.0 0.0 0.0 0.0 0.0 0.0
   EMISFACT L0002081     HRDOW 0.0 0.0 0.0 0.0 0.0 0.0
   EMISFACT L0002082     HRDOW 0.0 0.0 0.0 0.0 0.0 0.0
   EMISFACT L0002082     HRDOW 0.0 0.0 0.0 0.0 0.0 0.0
   EMISFACT L0002082     HRDOW 0.0 0.0 0.0 0.0 0.0 0.0
   EMISFACT L0002082     HRDOW 0.0 0.0 0.0 0.0 0.0 0.0
   EMISFACT L0002083     HRDOW 0.0 0.0 0.0 0.0 0.0 0.0
   EMISFACT L0002083     HRDOW 0.0 0.0 0.0 0.0 0.0 0.0
   EMISFACT L0002083     HRDOW 0.0 0.0 0.0 0.0 0.0 0.0
   EMISFACT L0002083     HRDOW 0.0 0.0 0.0 0.0 0.0 0.0
   EMISFACT L0002084     HRDOW 0.0 0.0 0.0 0.0 0.0 0.0
   EMISFACT L0002084     HRDOW 0.0 0.0 0.0 0.0 0.0 0.0
   EMISFACT L0002084     HRDOW 0.0 0.0 0.0 0.0 0.0 0.0
   EMISFACT L0002084     HRDOW 0.0 0.0 0.0 0.0 0.0 0.0
   EMISFACT L0002085     HRDOW 0.0 0.0 0.0 0.0 0.0 0.0
   EMISFACT L0002085     HRDOW 0.0 0.0 0.0 0.0 0.0 0.0
   EMISFACT L0002085     HRDOW 0.0 0.0 0.0 0.0 0.0 0.0
   EMISFACT L0002085     HRDOW 0.0 0.0 0.0 0.0 0.0 0.0
   EMISFACT L0002086     HRDOW 0.0 0.0 0.0 0.0 0.0 0.0
   EMISFACT L0002086     HRDOW 0.0 0.0 0.0 0.0 0.0 0.0
   EMISFACT L0002086     HRDOW 0.0 0.0 0.0 0.0 0.0 0.0
   EMISFACT L0002086     HRDOW 0.0 0.0 0.0 0.0 0.0 0.0
** WeekDays:
   EMISFACT L0003711     HRDOW 0.0 0.0 0.0 0.0 0.0 0.0
   EMISFACT L0003711     HRDOW 1.0 1.0 1.0 1.0 1.0 1.0
   EMISFACT L0003711     HRDOW 1.0 1.0 1.0 1.0 0.0 0.0
   EMISFACT L0003711     HRDOW 0.0 0.0 0.0 0.0 0.0 0.0
   EMISFACT L0003712     HRDOW 0.0 0.0 0.0 0.0 0.0 0.0
   EMISFACT L0003712     HRDOW 1.0 1.0 1.0 1.0 1.0 1.0
   EMISFACT L0003712     HRDOW 1.0 1.0 1.0 1.0 0.0 0.0
   EMISFACT L0003712     HRDOW 0.0 0.0 0.0 0.0 0.0 0.0
   EMISFACT L0003713     HRDOW 0.0 0.0 0.0 0.0 0.0 0.0
   EMISFACT L0003713     HRDOW 1.0 1.0 1.0 1.0 1.0 1.0
   EMISFACT L0003713     HRDOW 1.0 1.0 1.0 1.0 0.0 0.0
   EMISFACT L0003713     HRDOW 0.0 0.0 0.0 0.0 0.0 0.0
   EMISFACT L0003714     HRDOW 0.0 0.0 0.0 0.0 0.0 0.0
   EMISFACT L0003714     HRDOW 1.0 1.0 1.0 1.0 1.0 1.0
   EMISFACT L0003714     HRDOW 1.0 1.0 1.0 1.0 0.0 0.0
   EMISFACT L0003714     HRDOW 0.0 0.0 0.0 0.0 0.0 0.0
   EMISFACT L0003715     HRDOW 0.0 0.0 0.0 0.0 0.0 0.0
   EMISFACT L0003715     HRDOW 1.0 1.0 1.0 1.0 1.0 1.0
   EMISFACT L0003715     HRDOW 1.0 1.0 1.0 1.0 0.0 0.0
   EMISFACT L0003715     HRDOW 0.0 0.0 0.0 0.0 0.0 0.0
   EMISFACT L0003716     HRDOW 0.0 0.0 0.0 0.0 0.0 0.0
   EMISFACT L0003716     HRDOW 1.0 1.0 1.0 1.0 1.0 1.0
   EMISFACT L0003716     HRDOW 1.0 1.0 1.0 1.0 0.0 0.0
   EMISFACT L0003716     HRDOW 0.0 0.0 0.0 0.0 0.0 0.0
   EMISFACT L0003717     HRDOW 0.0 0.0 0.0 0.0 0.0 0.0
   EMISFACT L0003717     HRDOW 1.0 1.0 1.0 1.0 1.0 1.0
   EMISFACT L0003717     HRDOW 1.0 1.0 1.0 1.0 0.0 0.0
   EMISFACT L0003717     HRDOW 0.0 0.0 0.0 0.0 0.0 0.0
   EMISFACT L0003718     HRDOW 0.0 0.0 0.0 0.0 0.0 0.0
   EMISFACT L0003718     HRDOW 1.0 1.0 1.0 1.0 1.0 1.0
   EMISFACT L0003718     HRDOW 1.0 1.0 1.0 1.0 0.0 0.0
```

```
EMISFACT L0003718     HRDOW 0.0 0.0 0.0 0.0 0.0 0.0
EMISFACT L0003719     HRDOW 0.0 0.0 0.0 0.0 0.0 0.0
EMISFACT L0003719     HRDOW 1.0 1.0 1.0 1.0 1.0 1.0
EMISFACT L0003719     HRDOW 1.0 1.0 1.0 1.0 0.0 0.0
EMISFACT L0003719     HRDOW 0.0 0.0 0.0 0.0 0.0 0.0
EMISFACT L0003720     HRDOW 0.0 0.0 0.0 0.0 0.0 0.0
EMISFACT L0003720     HRDOW 1.0 1.0 1.0 1.0 1.0 1.0
EMISFACT L0003720     HRDOW 1.0 1.0 1.0 1.0 0.0 0.0
EMISFACT L0003720     HRDOW 0.0 0.0 0.0 0.0 0.0 0.0
EMISFACT L0003721     HRDOW 0.0 0.0 0.0 0.0 0.0 0.0
EMISFACT L0003721     HRDOW 1.0 1.0 1.0 1.0 1.0 1.0
EMISFACT L0003721     HRDOW 1.0 1.0 1.0 1.0 0.0 0.0
EMISFACT L0003721     HRDOW 0.0 0.0 0.0 0.0 0.0 0.0
EMISFACT L0003722     HRDOW 0.0 0.0 0.0 0.0 0.0 0.0
EMISFACT L0003722     HRDOW 1.0 1.0 1.0 1.0 1.0 1.0
EMISFACT L0003722     HRDOW 1.0 1.0 1.0 1.0 0.0 0.0
EMISFACT L0003722     HRDOW 0.0 0.0 0.0 0.0 0.0 0.0
EMISFACT L0003723     HRDOW 0.0 0.0 0.0 0.0 0.0 0.0
EMISFACT L0003723     HRDOW 1.0 1.0 1.0 1.0 1.0 1.0
EMISFACT L0003723     HRDOW 1.0 1.0 1.0 1.0 0.0 0.0
EMISFACT L0003723     HRDOW 0.0 0.0 0.0 0.0 0.0 0.0
EMISFACT L0003724     HRDOW 0.0 0.0 0.0 0.0 0.0 0.0
EMISFACT L0003724     HRDOW 1.0 1.0 1.0 1.0 1.0 1.0
EMISFACT L0003724     HRDOW 1.0 1.0 1.0 1.0 0.0 0.0
EMISFACT L0003724     HRDOW 0.0 0.0 0.0 0.0 0.0 0.0
EMISFACT L0003725     HRDOW 0.0 0.0 0.0 0.0 0.0 0.0
EMISFACT L0003725     HRDOW 1.0 1.0 1.0 1.0 1.0 1.0
EMISFACT L0003725     HRDOW 1.0 1.0 1.0 1.0 0.0 0.0
EMISFACT L0003725     HRDOW 0.0 0.0 0.0 0.0 0.0 0.0
EMISFACT L0003726     HRDOW 0.0 0.0 0.0 0.0 0.0 0.0
EMISFACT L0003726     HRDOW 1.0 1.0 1.0 1.0 1.0 1.0
EMISFACT L0003726     HRDOW 1.0 1.0 1.0 1.0 0.0 0.0
EMISFACT L0003726     HRDOW 0.0 0.0 0.0 0.0 0.0 0.0
EMISFACT L0003727     HRDOW 0.0 0.0 0.0 0.0 0.0 0.0
EMISFACT L0003727     HRDOW 1.0 1.0 1.0 1.0 1.0 1.0
EMISFACT L0003727     HRDOW 1.0 1.0 1.0 1.0 0.0 0.0
EMISFACT L0003727     HRDOW 0.0 0.0 0.0 0.0 0.0 0.0
EMISFACT L0003728     HRDOW 0.0 0.0 0.0 0.0 0.0 0.0
EMISFACT L0003728     HRDOW 1.0 1.0 1.0 1.0 1.0 1.0
EMISFACT L0003728     HRDOW 1.0 1.0 1.0 1.0 0.0 0.0
EMISFACT L0003728     HRDOW 0.0 0.0 0.0 0.0 0.0 0.0
EMISFACT L0003729     HRDOW 0.0 0.0 0.0 0.0 0.0 0.0
EMISFACT L0003729     HRDOW 1.0 1.0 1.0 1.0 1.0 1.0
EMISFACT L0003729     HRDOW 1.0 1.0 1.0 1.0 0.0 0.0
EMISFACT L0003729     HRDOW 0.0 0.0 0.0 0.0 0.0 0.0
EMISFACT L0003730     HRDOW 0.0 0.0 0.0 0.0 0.0 0.0
EMISFACT L0003730     HRDOW 1.0 1.0 1.0 1.0 1.0 1.0
EMISFACT L0003730     HRDOW 1.0 1.0 1.0 1.0 0.0 0.0
EMISFACT L0003730     HRDOW 0.0 0.0 0.0 0.0 0.0 0.0
EMISFACT L0003731     HRDOW 0.0 0.0 0.0 0.0 0.0 0.0
EMISFACT L0003731     HRDOW 1.0 1.0 1.0 1.0 1.0 1.0
EMISFACT L0003731     HRDOW 1.0 1.0 1.0 1.0 0.0 0.0
EMISFACT L0003731     HRDOW 0.0 0.0 0.0 0.0 0.0 0.0
EMISFACT L0003732     HRDOW 0.0 0.0 0.0 0.0 0.0 0.0
EMISFACT L0003732     HRDOW 1.0 1.0 1.0 1.0 1.0 1.0
EMISFACT L0003732     HRDOW 1.0 1.0 1.0 1.0 0.0 0.0
EMISFACT L0003732     HRDOW 0.0 0.0 0.0 0.0 0.0 0.0
EMISFACT L0003733     HRDOW 0.0 0.0 0.0 0.0 0.0 0.0
EMISFACT L0003733     HRDOW 1.0 1.0 1.0 1.0 1.0 1.0
```

```
EMISFACT L0003733     HRDOW 1.0 1.0 1.0 1.0 0.0 0.0
EMISFACT L0003733     HRDOW 0.0 0.0 0.0 0.0 0.0 0.0
EMISFACT L0003734     HRDOW 0.0 0.0 0.0 0.0 0.0 0.0
EMISFACT L0003734     HRDOW 1.0 1.0 1.0 1.0 1.0 1.0
EMISFACT L0003734     HRDOW 1.0 1.0 1.0 1.0 0.0 0.0
EMISFACT L0003734     HRDOW 0.0 0.0 0.0 0.0 0.0 0.0
EMISFACT L0003735     HRDOW 0.0 0.0 0.0 0.0 0.0 0.0
EMISFACT L0003735     HRDOW 1.0 1.0 1.0 1.0 1.0 1.0
EMISFACT L0003735     HRDOW 1.0 1.0 1.0 1.0 0.0 0.0
EMISFACT L0003735     HRDOW 0.0 0.0 0.0 0.0 0.0 0.0
EMISFACT L0003736     HRDOW 0.0 0.0 0.0 0.0 0.0 0.0
EMISFACT L0003736     HRDOW 1.0 1.0 1.0 1.0 1.0 1.0
EMISFACT L0003736     HRDOW 1.0 1.0 1.0 1.0 0.0 0.0
EMISFACT L0003736     HRDOW 0.0 0.0 0.0 0.0 0.0 0.0
EMISFACT L0003737     HRDOW 0.0 0.0 0.0 0.0 0.0 0.0
EMISFACT L0003737     HRDOW 1.0 1.0 1.0 1.0 1.0 1.0
EMISFACT L0003737     HRDOW 1.0 1.0 1.0 1.0 0.0 0.0
EMISFACT L0003737     HRDOW 0.0 0.0 0.0 0.0 0.0 0.0
EMISFACT L0003738     HRDOW 0.0 0.0 0.0 0.0 0.0 0.0
EMISFACT L0003738     HRDOW 1.0 1.0 1.0 1.0 1.0 1.0
EMISFACT L0003738     HRDOW 1.0 1.0 1.0 1.0 0.0 0.0
EMISFACT L0003738     HRDOW 0.0 0.0 0.0 0.0 0.0 0.0
EMISFACT L0003739     HRDOW 0.0 0.0 0.0 0.0 0.0 0.0
EMISFACT L0003739     HRDOW 1.0 1.0 1.0 1.0 1.0 1.0
EMISFACT L0003739     HRDOW 1.0 1.0 1.0 1.0 0.0 0.0
EMISFACT L0003739     HRDOW 0.0 0.0 0.0 0.0 0.0 0.0
EMISFACT L0003740     HRDOW 0.0 0.0 0.0 0.0 0.0 0.0
EMISFACT L0003740     HRDOW 1.0 1.0 1.0 1.0 1.0 1.0
EMISFACT L0003740     HRDOW 1.0 1.0 1.0 1.0 0.0 0.0
EMISFACT L0003740     HRDOW 0.0 0.0 0.0 0.0 0.0 0.0
EMISFACT L0003741     HRDOW 0.0 0.0 0.0 0.0 0.0 0.0
EMISFACT L0003741     HRDOW 1.0 1.0 1.0 1.0 1.0 1.0
EMISFACT L0003741     HRDOW 1.0 1.0 1.0 1.0 0.0 0.0
EMISFACT L0003741     HRDOW 0.0 0.0 0.0 0.0 0.0 0.0
EMISFACT L0003742     HRDOW 0.0 0.0 0.0 0.0 0.0 0.0
EMISFACT L0003742     HRDOW 1.0 1.0 1.0 1.0 1.0 1.0
EMISFACT L0003742     HRDOW 1.0 1.0 1.0 1.0 0.0 0.0
EMISFACT L0003742     HRDOW 0.0 0.0 0.0 0.0 0.0 0.0
EMISFACT L0003743     HRDOW 0.0 0.0 0.0 0.0 0.0 0.0
EMISFACT L0003743     HRDOW 1.0 1.0 1.0 1.0 1.0 1.0
EMISFACT L0003743     HRDOW 1.0 1.0 1.0 1.0 0.0 0.0
EMISFACT L0003743     HRDOW 0.0 0.0 0.0 0.0 0.0 0.0
EMISFACT L0003744     HRDOW 0.0 0.0 0.0 0.0 0.0 0.0
EMISFACT L0003744     HRDOW 1.0 1.0 1.0 1.0 1.0 1.0
EMISFACT L0003744     HRDOW 1.0 1.0 1.0 1.0 0.0 0.0
EMISFACT L0003744     HRDOW 0.0 0.0 0.0 0.0 0.0 0.0
EMISFACT L0003745     HRDOW 0.0 0.0 0.0 0.0 0.0 0.0
EMISFACT L0003745     HRDOW 1.0 1.0 1.0 1.0 1.0 1.0
EMISFACT L0003745     HRDOW 1.0 1.0 1.0 1.0 0.0 0.0
EMISFACT L0003745     HRDOW 0.0 0.0 0.0 0.0 0.0 0.0
EMISFACT L0003746     HRDOW 0.0 0.0 0.0 0.0 0.0 0.0
EMISFACT L0003746     HRDOW 1.0 1.0 1.0 1.0 1.0 1.0
EMISFACT L0003746     HRDOW 1.0 1.0 1.0 1.0 0.0 0.0
EMISFACT L0003746     HRDOW 0.0 0.0 0.0 0.0 0.0 0.0
EMISFACT L0003747     HRDOW 0.0 0.0 0.0 0.0 0.0 0.0
EMISFACT L0003747     HRDOW 1.0 1.0 1.0 1.0 1.0 1.0
EMISFACT L0003747     HRDOW 1.0 1.0 1.0 1.0 0.0 0.0
EMISFACT L0003747     HRDOW 0.0 0.0 0.0 0.0 0.0 0.0
EMISFACT L0003748     HRDOW 0.0 0.0 0.0 0.0 0.0 0.0
```

```
EMISFACT L0003748     HRDOW 1.0 1.0 1.0 1.0 1.0 1.0
EMISFACT L0003748     HRDOW 1.0 1.0 1.0 1.0 0.0 0.0
EMISFACT L0003748     HRDOW 0.0 0.0 0.0 0.0 0.0 0.0
EMISFACT L0003749     HRDOW 0.0 0.0 0.0 0.0 0.0 0.0
EMISFACT L0003749     HRDOW 1.0 1.0 1.0 1.0 1.0 1.0
EMISFACT L0003749     HRDOW 1.0 1.0 1.0 1.0 0.0 0.0
EMISFACT L0003749     HRDOW 0.0 0.0 0.0 0.0 0.0 0.0
EMISFACT L0003750     HRDOW 0.0 0.0 0.0 0.0 0.0 0.0
EMISFACT L0003750     HRDOW 1.0 1.0 1.0 1.0 1.0 1.0
EMISFACT L0003750     HRDOW 1.0 1.0 1.0 1.0 0.0 0.0
EMISFACT L0003750     HRDOW 0.0 0.0 0.0 0.0 0.0 0.0
EMISFACT L0003751     HRDOW 0.0 0.0 0.0 0.0 0.0 0.0
EMISFACT L0003751     HRDOW 1.0 1.0 1.0 1.0 1.0 1.0
EMISFACT L0003751     HRDOW 1.0 1.0 1.0 1.0 0.0 0.0
EMISFACT L0003751     HRDOW 0.0 0.0 0.0 0.0 0.0 0.0
EMISFACT L0003752     HRDOW 0.0 0.0 0.0 0.0 0.0 0.0
EMISFACT L0003752     HRDOW 1.0 1.0 1.0 1.0 1.0 1.0
EMISFACT L0003752     HRDOW 1.0 1.0 1.0 1.0 0.0 0.0
EMISFACT L0003752     HRDOW 0.0 0.0 0.0 0.0 0.0 0.0
EMISFACT L0003753     HRDOW 0.0 0.0 0.0 0.0 0.0 0.0
EMISFACT L0003753     HRDOW 1.0 1.0 1.0 1.0 1.0 1.0
EMISFACT L0003753     HRDOW 1.0 1.0 1.0 1.0 0.0 0.0
EMISFACT L0003753     HRDOW 0.0 0.0 0.0 0.0 0.0 0.0
EMISFACT L0003754     HRDOW 0.0 0.0 0.0 0.0 0.0 0.0
EMISFACT L0003754     HRDOW 1.0 1.0 1.0 1.0 1.0 1.0
EMISFACT L0003754     HRDOW 1.0 1.0 1.0 1.0 0.0 0.0
EMISFACT L0003754     HRDOW 0.0 0.0 0.0 0.0 0.0 0.0
EMISFACT L0003755     HRDOW 0.0 0.0 0.0 0.0 0.0 0.0
EMISFACT L0003755     HRDOW 1.0 1.0 1.0 1.0 1.0 1.0
EMISFACT L0003755     HRDOW 1.0 1.0 1.0 1.0 0.0 0.0
EMISFACT L0003755     HRDOW 0.0 0.0 0.0 0.0 0.0 0.0
EMISFACT L0003756     HRDOW 0.0 0.0 0.0 0.0 0.0 0.0
EMISFACT L0003756     HRDOW 1.0 1.0 1.0 1.0 1.0 1.0
EMISFACT L0003756     HRDOW 1.0 1.0 1.0 1.0 0.0 0.0
EMISFACT L0003756     HRDOW 0.0 0.0 0.0 0.0 0.0 0.0
EMISFACT L0003757     HRDOW 0.0 0.0 0.0 0.0 0.0 0.0
EMISFACT L0003757     HRDOW 1.0 1.0 1.0 1.0 1.0 1.0
EMISFACT L0003757     HRDOW 1.0 1.0 1.0 1.0 0.0 0.0
EMISFACT L0003757     HRDOW 0.0 0.0 0.0 0.0 0.0 0.0
EMISFACT L0003758     HRDOW 0.0 0.0 0.0 0.0 0.0 0.0
EMISFACT L0003758     HRDOW 1.0 1.0 1.0 1.0 1.0 1.0
EMISFACT L0003758     HRDOW 1.0 1.0 1.0 1.0 0.0 0.0
EMISFACT L0003758     HRDOW 0.0 0.0 0.0 0.0 0.0 0.0
EMISFACT L0003759     HRDOW 0.0 0.0 0.0 0.0 0.0 0.0
EMISFACT L0003759     HRDOW 1.0 1.0 1.0 1.0 1.0 1.0
EMISFACT L0003759     HRDOW 1.0 1.0 1.0 1.0 0.0 0.0
EMISFACT L0003759     HRDOW 0.0 0.0 0.0 0.0 0.0 0.0
EMISFACT L0003760     HRDOW 0.0 0.0 0.0 0.0 0.0 0.0
EMISFACT L0003760     HRDOW 1.0 1.0 1.0 1.0 1.0 1.0
EMISFACT L0003760     HRDOW 1.0 1.0 1.0 1.0 0.0 0.0
EMISFACT L0003760     HRDOW 0.0 0.0 0.0 0.0 0.0 0.0
EMISFACT L0003761     HRDOW 0.0 0.0 0.0 0.0 0.0 0.0
EMISFACT L0003761     HRDOW 1.0 1.0 1.0 1.0 1.0 1.0
EMISFACT L0003761     HRDOW 1.0 1.0 1.0 1.0 0.0 0.0
EMISFACT L0003761     HRDOW 0.0 0.0 0.0 0.0 0.0 0.0
EMISFACT L0003762     HRDOW 0.0 0.0 0.0 0.0 0.0 0.0
EMISFACT L0003762     HRDOW 1.0 1.0 1.0 1.0 1.0 1.0
EMISFACT L0003762     HRDOW 1.0 1.0 1.0 1.0 0.0 0.0
EMISFACT L0003762     HRDOW 0.0 0.0 0.0 0.0 0.0 0.0
```

```
   EMISFACT L0003763     HRDOW 0.0 0.0 0.0 0.0 0.0 0.0
   EMISFACT L0003763     HRDOW 1.0 1.0 1.0 1.0 1.0 1.0
   EMISFACT L0003763     HRDOW 1.0 1.0 1.0 1.0 0.0 0.0
   EMISFACT L0003763     HRDOW 0.0 0.0 0.0 0.0 0.0 0.0
   EMISFACT L0003764     HRDOW 0.0 0.0 0.0 0.0 0.0 0.0
   EMISFACT L0003764     HRDOW 1.0 1.0 1.0 1.0 1.0 1.0
   EMISFACT L0003764     HRDOW 1.0 1.0 1.0 1.0 0.0 0.0
   EMISFACT L0003764     HRDOW 0.0 0.0 0.0 0.0 0.0 0.0
   EMISFACT L0003765     HRDOW 0.0 0.0 0.0 0.0 0.0 0.0
   EMISFACT L0003765     HRDOW 1.0 1.0 1.0 1.0 1.0 1.0
   EMISFACT L0003765     HRDOW 1.0 1.0 1.0 1.0 0.0 0.0
   EMISFACT L0003765     HRDOW 0.0 0.0 0.0 0.0 0.0 0.0
   EMISFACT L0003766     HRDOW 0.0 0.0 0.0 0.0 0.0 0.0
   EMISFACT L0003766     HRDOW 1.0 1.0 1.0 1.0 1.0 1.0
   EMISFACT L0003766     HRDOW 1.0 1.0 1.0 1.0 0.0 0.0
   EMISFACT L0003766     HRDOW 0.0 0.0 0.0 0.0 0.0 0.0
   EMISFACT L0003767     HRDOW 0.0 0.0 0.0 0.0 0.0 0.0
   EMISFACT L0003767     HRDOW 1.0 1.0 1.0 1.0 1.0 1.0
   EMISFACT L0003767     HRDOW 1.0 1.0 1.0 1.0 0.0 0.0
   EMISFACT L0003767     HRDOW 0.0 0.0 0.0 0.0 0.0 0.0
   EMISFACT L0003768     HRDOW 0.0 0.0 0.0 0.0 0.0 0.0
   EMISFACT L0003768     HRDOW 1.0 1.0 1.0 1.0 1.0 1.0
   EMISFACT L0003768     HRDOW 1.0 1.0 1.0 1.0 0.0 0.0
   EMISFACT L0003768     HRDOW 0.0 0.0 0.0 0.0 0.0 0.0
** Saturday:
   EMISFACT L0003711     HRDOW 0.0 0.0 0.0 0.0 0.0 0.0
   EMISFACT L0003711     HRDOW 0.0 0.0 0.0 0.0 0.0 0.0
   EMISFACT L0003711     HRDOW 0.0 0.0 0.0 0.0 0.0 0.0
   EMISFACT L0003711     HRDOW 0.0 0.0 0.0 0.0 0.0 0.0
   EMISFACT L0003712     HRDOW 0.0 0.0 0.0 0.0 0.0 0.0
   EMISFACT L0003712     HRDOW 0.0 0.0 0.0 0.0 0.0 0.0
   EMISFACT L0003712     HRDOW 0.0 0.0 0.0 0.0 0.0 0.0
   EMISFACT L0003712     HRDOW 0.0 0.0 0.0 0.0 0.0 0.0
   EMISFACT L0003713     HRDOW 0.0 0.0 0.0 0.0 0.0 0.0
   EMISFACT L0003713     HRDOW 0.0 0.0 0.0 0.0 0.0 0.0
   EMISFACT L0003713     HRDOW 0.0 0.0 0.0 0.0 0.0 0.0
   EMISFACT L0003713     HRDOW 0.0 0.0 0.0 0.0 0.0 0.0
   EMISFACT L0003714     HRDOW 0.0 0.0 0.0 0.0 0.0 0.0
   EMISFACT L0003714     HRDOW 0.0 0.0 0.0 0.0 0.0 0.0
   EMISFACT L0003714     HRDOW 0.0 0.0 0.0 0.0 0.0 0.0
   EMISFACT L0003714     HRDOW 0.0 0.0 0.0 0.0 0.0 0.0
   EMISFACT L0003715     HRDOW 0.0 0.0 0.0 0.0 0.0 0.0
   EMISFACT L0003715     HRDOW 0.0 0.0 0.0 0.0 0.0 0.0
   EMISFACT L0003715     HRDOW 0.0 0.0 0.0 0.0 0.0 0.0
   EMISFACT L0003715     HRDOW 0.0 0.0 0.0 0.0 0.0 0.0
   EMISFACT L0003716     HRDOW 0.0 0.0 0.0 0.0 0.0 0.0
   EMISFACT L0003716     HRDOW 0.0 0.0 0.0 0.0 0.0 0.0
   EMISFACT L0003716     HRDOW 0.0 0.0 0.0 0.0 0.0 0.0
   EMISFACT L0003716     HRDOW 0.0 0.0 0.0 0.0 0.0 0.0
   EMISFACT L0003717     HRDOW 0.0 0.0 0.0 0.0 0.0 0.0
   EMISFACT L0003717     HRDOW 0.0 0.0 0.0 0.0 0.0 0.0
   EMISFACT L0003717     HRDOW 0.0 0.0 0.0 0.0 0.0 0.0
   EMISFACT L0003717     HRDOW 0.0 0.0 0.0 0.0 0.0 0.0
   EMISFACT L0003718     HRDOW 0.0 0.0 0.0 0.0 0.0 0.0
   EMISFACT L0003718     HRDOW 0.0 0.0 0.0 0.0 0.0 0.0
   EMISFACT L0003718     HRDOW 0.0 0.0 0.0 0.0 0.0 0.0
   EMISFACT L0003718     HRDOW 0.0 0.0 0.0 0.0 0.0 0.0
   EMISFACT L0003719     HRDOW 0.0 0.0 0.0 0.0 0.0 0.0
   EMISFACT L0003719     HRDOW 0.0 0.0 0.0 0.0 0.0 0.0
```

```
EMISFACT L0003719     HRDOW 0.0 0.0 0.0 0.0 0.0 0.0
EMISFACT L0003719     HRDOW 0.0 0.0 0.0 0.0 0.0 0.0
EMISFACT L0003720     HRDOW 0.0 0.0 0.0 0.0 0.0 0.0
EMISFACT L0003720     HRDOW 0.0 0.0 0.0 0.0 0.0 0.0
EMISFACT L0003720     HRDOW 0.0 0.0 0.0 0.0 0.0 0.0
EMISFACT L0003720     HRDOW 0.0 0.0 0.0 0.0 0.0 0.0
EMISFACT L0003721     HRDOW 0.0 0.0 0.0 0.0 0.0 0.0
EMISFACT L0003721     HRDOW 0.0 0.0 0.0 0.0 0.0 0.0
EMISFACT L0003721     HRDOW 0.0 0.0 0.0 0.0 0.0 0.0
EMISFACT L0003721     HRDOW 0.0 0.0 0.0 0.0 0.0 0.0
EMISFACT L0003722     HRDOW 0.0 0.0 0.0 0.0 0.0 0.0
EMISFACT L0003722     HRDOW 0.0 0.0 0.0 0.0 0.0 0.0
EMISFACT L0003722     HRDOW 0.0 0.0 0.0 0.0 0.0 0.0
EMISFACT L0003722     HRDOW 0.0 0.0 0.0 0.0 0.0 0.0
EMISFACT L0003723     HRDOW 0.0 0.0 0.0 0.0 0.0 0.0
EMISFACT L0003723     HRDOW 0.0 0.0 0.0 0.0 0.0 0.0
EMISFACT L0003723     HRDOW 0.0 0.0 0.0 0.0 0.0 0.0
EMISFACT L0003723     HRDOW 0.0 0.0 0.0 0.0 0.0 0.0
EMISFACT L0003724     HRDOW 0.0 0.0 0.0 0.0 0.0 0.0
EMISFACT L0003724     HRDOW 0.0 0.0 0.0 0.0 0.0 0.0
EMISFACT L0003724     HRDOW 0.0 0.0 0.0 0.0 0.0 0.0
EMISFACT L0003724     HRDOW 0.0 0.0 0.0 0.0 0.0 0.0
EMISFACT L0003725     HRDOW 0.0 0.0 0.0 0.0 0.0 0.0
EMISFACT L0003725     HRDOW 0.0 0.0 0.0 0.0 0.0 0.0
EMISFACT L0003725     HRDOW 0.0 0.0 0.0 0.0 0.0 0.0
EMISFACT L0003725     HRDOW 0.0 0.0 0.0 0.0 0.0 0.0
EMISFACT L0003726     HRDOW 0.0 0.0 0.0 0.0 0.0 0.0
EMISFACT L0003726     HRDOW 0.0 0.0 0.0 0.0 0.0 0.0
EMISFACT L0003726     HRDOW 0.0 0.0 0.0 0.0 0.0 0.0
EMISFACT L0003726     HRDOW 0.0 0.0 0.0 0.0 0.0 0.0
EMISFACT L0003727     HRDOW 0.0 0.0 0.0 0.0 0.0 0.0
EMISFACT L0003727     HRDOW 0.0 0.0 0.0 0.0 0.0 0.0
EMISFACT L0003727     HRDOW 0.0 0.0 0.0 0.0 0.0 0.0
EMISFACT L0003727     HRDOW 0.0 0.0 0.0 0.0 0.0 0.0
EMISFACT L0003728     HRDOW 0.0 0.0 0.0 0.0 0.0 0.0
EMISFACT L0003728     HRDOW 0.0 0.0 0.0 0.0 0.0 0.0
EMISFACT L0003728     HRDOW 0.0 0.0 0.0 0.0 0.0 0.0
EMISFACT L0003728     HRDOW 0.0 0.0 0.0 0.0 0.0 0.0
EMISFACT L0003729     HRDOW 0.0 0.0 0.0 0.0 0.0 0.0
EMISFACT L0003729     HRDOW 0.0 0.0 0.0 0.0 0.0 0.0
EMISFACT L0003729     HRDOW 0.0 0.0 0.0 0.0 0.0 0.0
EMISFACT L0003729     HRDOW 0.0 0.0 0.0 0.0 0.0 0.0
EMISFACT L0003730     HRDOW 0.0 0.0 0.0 0.0 0.0 0.0
EMISFACT L0003730     HRDOW 0.0 0.0 0.0 0.0 0.0 0.0
EMISFACT L0003730     HRDOW 0.0 0.0 0.0 0.0 0.0 0.0
EMISFACT L0003730     HRDOW 0.0 0.0 0.0 0.0 0.0 0.0
EMISFACT L0003731     HRDOW 0.0 0.0 0.0 0.0 0.0 0.0
EMISFACT L0003731     HRDOW 0.0 0.0 0.0 0.0 0.0 0.0
EMISFACT L0003731     HRDOW 0.0 0.0 0.0 0.0 0.0 0.0
EMISFACT L0003731     HRDOW 0.0 0.0 0.0 0.0 0.0 0.0
EMISFACT L0003732     HRDOW 0.0 0.0 0.0 0.0 0.0 0.0
EMISFACT L0003732     HRDOW 0.0 0.0 0.0 0.0 0.0 0.0
EMISFACT L0003732     HRDOW 0.0 0.0 0.0 0.0 0.0 0.0
EMISFACT L0003732     HRDOW 0.0 0.0 0.0 0.0 0.0 0.0
EMISFACT L0003733     HRDOW 0.0 0.0 0.0 0.0 0.0 0.0
EMISFACT L0003733     HRDOW 0.0 0.0 0.0 0.0 0.0 0.0
EMISFACT L0003733     HRDOW 0.0 0.0 0.0 0.0 0.0 0.0
EMISFACT L0003733     HRDOW 0.0 0.0 0.0 0.0 0.0 0.0
EMISFACT L0003734     HRDOW 0.0 0.0 0.0 0.0 0.0 0.0
```

```
EMISFACT L0003734     HRDOW 0.0 0.0 0.0 0.0 0.0 0.0
EMISFACT L0003734     HRDOW 0.0 0.0 0.0 0.0 0.0 0.0
EMISFACT L0003734     HRDOW 0.0 0.0 0.0 0.0 0.0 0.0
EMISFACT L0003735     HRDOW 0.0 0.0 0.0 0.0 0.0 0.0
EMISFACT L0003735     HRDOW 0.0 0.0 0.0 0.0 0.0 0.0
EMISFACT L0003735     HRDOW 0.0 0.0 0.0 0.0 0.0 0.0
EMISFACT L0003735     HRDOW 0.0 0.0 0.0 0.0 0.0 0.0
EMISFACT L0003736     HRDOW 0.0 0.0 0.0 0.0 0.0 0.0
EMISFACT L0003736     HRDOW 0.0 0.0 0.0 0.0 0.0 0.0
EMISFACT L0003736     HRDOW 0.0 0.0 0.0 0.0 0.0 0.0
EMISFACT L0003736     HRDOW 0.0 0.0 0.0 0.0 0.0 0.0
EMISFACT L0003737     HRDOW 0.0 0.0 0.0 0.0 0.0 0.0
EMISFACT L0003737     HRDOW 0.0 0.0 0.0 0.0 0.0 0.0
EMISFACT L0003737     HRDOW 0.0 0.0 0.0 0.0 0.0 0.0
EMISFACT L0003737     HRDOW 0.0 0.0 0.0 0.0 0.0 0.0
EMISFACT L0003738     HRDOW 0.0 0.0 0.0 0.0 0.0 0.0
EMISFACT L0003738     HRDOW 0.0 0.0 0.0 0.0 0.0 0.0
EMISFACT L0003738     HRDOW 0.0 0.0 0.0 0.0 0.0 0.0
EMISFACT L0003738     HRDOW 0.0 0.0 0.0 0.0 0.0 0.0
EMISFACT L0003739     HRDOW 0.0 0.0 0.0 0.0 0.0 0.0
EMISFACT L0003739     HRDOW 0.0 0.0 0.0 0.0 0.0 0.0
EMISFACT L0003739     HRDOW 0.0 0.0 0.0 0.0 0.0 0.0
EMISFACT L0003739     HRDOW 0.0 0.0 0.0 0.0 0.0 0.0
EMISFACT L0003740     HRDOW 0.0 0.0 0.0 0.0 0.0 0.0
EMISFACT L0003740     HRDOW 0.0 0.0 0.0 0.0 0.0 0.0
EMISFACT L0003740     HRDOW 0.0 0.0 0.0 0.0 0.0 0.0
EMISFACT L0003740     HRDOW 0.0 0.0 0.0 0.0 0.0 0.0
EMISFACT L0003741     HRDOW 0.0 0.0 0.0 0.0 0.0 0.0
EMISFACT L0003741     HRDOW 0.0 0.0 0.0 0.0 0.0 0.0
EMISFACT L0003741     HRDOW 0.0 0.0 0.0 0.0 0.0 0.0
EMISFACT L0003741     HRDOW 0.0 0.0 0.0 0.0 0.0 0.0
EMISFACT L0003742     HRDOW 0.0 0.0 0.0 0.0 0.0 0.0
EMISFACT L0003742     HRDOW 0.0 0.0 0.0 0.0 0.0 0.0
EMISFACT L0003742     HRDOW 0.0 0.0 0.0 0.0 0.0 0.0
EMISFACT L0003742     HRDOW 0.0 0.0 0.0 0.0 0.0 0.0
EMISFACT L0003743     HRDOW 0.0 0.0 0.0 0.0 0.0 0.0
EMISFACT L0003743     HRDOW 0.0 0.0 0.0 0.0 0.0 0.0
EMISFACT L0003743     HRDOW 0.0 0.0 0.0 0.0 0.0 0.0
EMISFACT L0003743     HRDOW 0.0 0.0 0.0 0.0 0.0 0.0
EMISFACT L0003744     HRDOW 0.0 0.0 0.0 0.0 0.0 0.0
EMISFACT L0003744     HRDOW 0.0 0.0 0.0 0.0 0.0 0.0
EMISFACT L0003744     HRDOW 0.0 0.0 0.0 0.0 0.0 0.0
EMISFACT L0003744     HRDOW 0.0 0.0 0.0 0.0 0.0 0.0
EMISFACT L0003745     HRDOW 0.0 0.0 0.0 0.0 0.0 0.0
EMISFACT L0003745     HRDOW 0.0 0.0 0.0 0.0 0.0 0.0
EMISFACT L0003745     HRDOW 0.0 0.0 0.0 0.0 0.0 0.0
EMISFACT L0003745     HRDOW 0.0 0.0 0.0 0.0 0.0 0.0
EMISFACT L0003746     HRDOW 0.0 0.0 0.0 0.0 0.0 0.0
EMISFACT L0003746     HRDOW 0.0 0.0 0.0 0.0 0.0 0.0
EMISFACT L0003746     HRDOW 0.0 0.0 0.0 0.0 0.0 0.0
EMISFACT L0003746     HRDOW 0.0 0.0 0.0 0.0 0.0 0.0
EMISFACT L0003747     HRDOW 0.0 0.0 0.0 0.0 0.0 0.0
EMISFACT L0003747     HRDOW 0.0 0.0 0.0 0.0 0.0 0.0
EMISFACT L0003747     HRDOW 0.0 0.0 0.0 0.0 0.0 0.0
EMISFACT L0003747     HRDOW 0.0 0.0 0.0 0.0 0.0 0.0
EMISFACT L0003748     HRDOW 0.0 0.0 0.0 0.0 0.0 0.0
EMISFACT L0003748     HRDOW 0.0 0.0 0.0 0.0 0.0 0.0
EMISFACT L0003748     HRDOW 0.0 0.0 0.0 0.0 0.0 0.0
EMISFACT L0003748     HRDOW 0.0 0.0 0.0 0.0 0.0 0.0
```

```
EMISFACT L0003749     HRDOW 0.0 0.0 0.0 0.0 0.0 0.0
EMISFACT L0003749     HRDOW 0.0 0.0 0.0 0.0 0.0 0.0
EMISFACT L0003749     HRDOW 0.0 0.0 0.0 0.0 0.0 0.0
EMISFACT L0003749     HRDOW 0.0 0.0 0.0 0.0 0.0 0.0
EMISFACT L0003750     HRDOW 0.0 0.0 0.0 0.0 0.0 0.0
EMISFACT L0003750     HRDOW 0.0 0.0 0.0 0.0 0.0 0.0
EMISFACT L0003750     HRDOW 0.0 0.0 0.0 0.0 0.0 0.0
EMISFACT L0003750     HRDOW 0.0 0.0 0.0 0.0 0.0 0.0
EMISFACT L0003751     HRDOW 0.0 0.0 0.0 0.0 0.0 0.0
EMISFACT L0003751     HRDOW 0.0 0.0 0.0 0.0 0.0 0.0
EMISFACT L0003751     HRDOW 0.0 0.0 0.0 0.0 0.0 0.0
EMISFACT L0003751     HRDOW 0.0 0.0 0.0 0.0 0.0 0.0
EMISFACT L0003752     HRDOW 0.0 0.0 0.0 0.0 0.0 0.0
EMISFACT L0003752     HRDOW 0.0 0.0 0.0 0.0 0.0 0.0
EMISFACT L0003752     HRDOW 0.0 0.0 0.0 0.0 0.0 0.0
EMISFACT L0003752     HRDOW 0.0 0.0 0.0 0.0 0.0 0.0
EMISFACT L0003753     HRDOW 0.0 0.0 0.0 0.0 0.0 0.0
EMISFACT L0003753     HRDOW 0.0 0.0 0.0 0.0 0.0 0.0
EMISFACT L0003753     HRDOW 0.0 0.0 0.0 0.0 0.0 0.0
EMISFACT L0003753     HRDOW 0.0 0.0 0.0 0.0 0.0 0.0
EMISFACT L0003754     HRDOW 0.0 0.0 0.0 0.0 0.0 0.0
EMISFACT L0003754     HRDOW 0.0 0.0 0.0 0.0 0.0 0.0
EMISFACT L0003754     HRDOW 0.0 0.0 0.0 0.0 0.0 0.0
EMISFACT L0003754     HRDOW 0.0 0.0 0.0 0.0 0.0 0.0
EMISFACT L0003755     HRDOW 0.0 0.0 0.0 0.0 0.0 0.0
EMISFACT L0003755     HRDOW 0.0 0.0 0.0 0.0 0.0 0.0
EMISFACT L0003755     HRDOW 0.0 0.0 0.0 0.0 0.0 0.0
EMISFACT L0003755     HRDOW 0.0 0.0 0.0 0.0 0.0 0.0
EMISFACT L0003756     HRDOW 0.0 0.0 0.0 0.0 0.0 0.0
EMISFACT L0003756     HRDOW 0.0 0.0 0.0 0.0 0.0 0.0
EMISFACT L0003756     HRDOW 0.0 0.0 0.0 0.0 0.0 0.0
EMISFACT L0003756     HRDOW 0.0 0.0 0.0 0.0 0.0 0.0
EMISFACT L0003757     HRDOW 0.0 0.0 0.0 0.0 0.0 0.0
EMISFACT L0003757     HRDOW 0.0 0.0 0.0 0.0 0.0 0.0
EMISFACT L0003757     HRDOW 0.0 0.0 0.0 0.0 0.0 0.0
EMISFACT L0003757     HRDOW 0.0 0.0 0.0 0.0 0.0 0.0
EMISFACT L0003758     HRDOW 0.0 0.0 0.0 0.0 0.0 0.0
EMISFACT L0003758     HRDOW 0.0 0.0 0.0 0.0 0.0 0.0
EMISFACT L0003758     HRDOW 0.0 0.0 0.0 0.0 0.0 0.0
EMISFACT L0003758     HRDOW 0.0 0.0 0.0 0.0 0.0 0.0
EMISFACT L0003759     HRDOW 0.0 0.0 0.0 0.0 0.0 0.0
EMISFACT L0003759     HRDOW 0.0 0.0 0.0 0.0 0.0 0.0
EMISFACT L0003759     HRDOW 0.0 0.0 0.0 0.0 0.0 0.0
EMISFACT L0003759     HRDOW 0.0 0.0 0.0 0.0 0.0 0.0
EMISFACT L0003760     HRDOW 0.0 0.0 0.0 0.0 0.0 0.0
EMISFACT L0003760     HRDOW 0.0 0.0 0.0 0.0 0.0 0.0
EMISFACT L0003760     HRDOW 0.0 0.0 0.0 0.0 0.0 0.0
EMISFACT L0003760     HRDOW 0.0 0.0 0.0 0.0 0.0 0.0
EMISFACT L0003761     HRDOW 0.0 0.0 0.0 0.0 0.0 0.0
EMISFACT L0003761     HRDOW 0.0 0.0 0.0 0.0 0.0 0.0
EMISFACT L0003761     HRDOW 0.0 0.0 0.0 0.0 0.0 0.0
EMISFACT L0003761     HRDOW 0.0 0.0 0.0 0.0 0.0 0.0
EMISFACT L0003762     HRDOW 0.0 0.0 0.0 0.0 0.0 0.0
EMISFACT L0003762     HRDOW 0.0 0.0 0.0 0.0 0.0 0.0
EMISFACT L0003762     HRDOW 0.0 0.0 0.0 0.0 0.0 0.0
EMISFACT L0003762     HRDOW 0.0 0.0 0.0 0.0 0.0 0.0
EMISFACT L0003763     HRDOW 0.0 0.0 0.0 0.0 0.0 0.0
EMISFACT L0003763     HRDOW 0.0 0.0 0.0 0.0 0.0 0.0
EMISFACT L0003763     HRDOW 0.0 0.0 0.0 0.0 0.0 0.0
```

```
   EMISFACT L0003763     HRDOW 0.0 0.0 0.0 0.0 0.0 0.0
   EMISFACT L0003764     HRDOW 0.0 0.0 0.0 0.0 0.0 0.0
   EMISFACT L0003764     HRDOW 0.0 0.0 0.0 0.0 0.0 0.0
   EMISFACT L0003764     HRDOW 0.0 0.0 0.0 0.0 0.0 0.0
   EMISFACT L0003764     HRDOW 0.0 0.0 0.0 0.0 0.0 0.0
   EMISFACT L0003765     HRDOW 0.0 0.0 0.0 0.0 0.0 0.0
   EMISFACT L0003765     HRDOW 0.0 0.0 0.0 0.0 0.0 0.0
   EMISFACT L0003765     HRDOW 0.0 0.0 0.0 0.0 0.0 0.0
   EMISFACT L0003765     HRDOW 0.0 0.0 0.0 0.0 0.0 0.0
   EMISFACT L0003766     HRDOW 0.0 0.0 0.0 0.0 0.0 0.0
   EMISFACT L0003766     HRDOW 0.0 0.0 0.0 0.0 0.0 0.0
   EMISFACT L0003766     HRDOW 0.0 0.0 0.0 0.0 0.0 0.0
   EMISFACT L0003766     HRDOW 0.0 0.0 0.0 0.0 0.0 0.0
   EMISFACT L0003767     HRDOW 0.0 0.0 0.0 0.0 0.0 0.0
   EMISFACT L0003767     HRDOW 0.0 0.0 0.0 0.0 0.0 0.0
   EMISFACT L0003767     HRDOW 0.0 0.0 0.0 0.0 0.0 0.0
   EMISFACT L0003767     HRDOW 0.0 0.0 0.0 0.0 0.0 0.0
   EMISFACT L0003768     HRDOW 0.0 0.0 0.0 0.0 0.0 0.0
   EMISFACT L0003768     HRDOW 0.0 0.0 0.0 0.0 0.0 0.0
   EMISFACT L0003768     HRDOW 0.0 0.0 0.0 0.0 0.0 0.0
   EMISFACT L0003768     HRDOW 0.0 0.0 0.0 0.0 0.0 0.0
** Sunday:
   EMISFACT L0003711     HRDOW 0.0 0.0 0.0 0.0 0.0 0.0
   EMISFACT L0003711     HRDOW 0.0 0.0 0.0 0.0 0.0 0.0
   EMISFACT L0003711     HRDOW 0.0 0.0 0.0 0.0 0.0 0.0
   EMISFACT L0003711     HRDOW 0.0 0.0 0.0 0.0 0.0 0.0
   EMISFACT L0003712     HRDOW 0.0 0.0 0.0 0.0 0.0 0.0
   EMISFACT L0003712     HRDOW 0.0 0.0 0.0 0.0 0.0 0.0
   EMISFACT L0003712     HRDOW 0.0 0.0 0.0 0.0 0.0 0.0
   EMISFACT L0003712     HRDOW 0.0 0.0 0.0 0.0 0.0 0.0
   EMISFACT L0003713     HRDOW 0.0 0.0 0.0 0.0 0.0 0.0
   EMISFACT L0003713     HRDOW 0.0 0.0 0.0 0.0 0.0 0.0
   EMISFACT L0003713     HRDOW 0.0 0.0 0.0 0.0 0.0 0.0
   EMISFACT L0003713     HRDOW 0.0 0.0 0.0 0.0 0.0 0.0
   EMISFACT L0003714     HRDOW 0.0 0.0 0.0 0.0 0.0 0.0
   EMISFACT L0003714     HRDOW 0.0 0.0 0.0 0.0 0.0 0.0
   EMISFACT L0003714     HRDOW 0.0 0.0 0.0 0.0 0.0 0.0
   EMISFACT L0003714     HRDOW 0.0 0.0 0.0 0.0 0.0 0.0
   EMISFACT L0003715     HRDOW 0.0 0.0 0.0 0.0 0.0 0.0
   EMISFACT L0003715     HRDOW 0.0 0.0 0.0 0.0 0.0 0.0
   EMISFACT L0003715     HRDOW 0.0 0.0 0.0 0.0 0.0 0.0
   EMISFACT L0003715     HRDOW 0.0 0.0 0.0 0.0 0.0 0.0
   EMISFACT L0003716     HRDOW 0.0 0.0 0.0 0.0 0.0 0.0
   EMISFACT L0003716     HRDOW 0.0 0.0 0.0 0.0 0.0 0.0
   EMISFACT L0003716     HRDOW 0.0 0.0 0.0 0.0 0.0 0.0
   EMISFACT L0003716     HRDOW 0.0 0.0 0.0 0.0 0.0 0.0
   EMISFACT L0003717     HRDOW 0.0 0.0 0.0 0.0 0.0 0.0
   EMISFACT L0003717     HRDOW 0.0 0.0 0.0 0.0 0.0 0.0
   EMISFACT L0003717     HRDOW 0.0 0.0 0.0 0.0 0.0 0.0
   EMISFACT L0003717     HRDOW 0.0 0.0 0.0 0.0 0.0 0.0
   EMISFACT L0003718     HRDOW 0.0 0.0 0.0 0.0 0.0 0.0
   EMISFACT L0003718     HRDOW 0.0 0.0 0.0 0.0 0.0 0.0
   EMISFACT L0003718     HRDOW 0.0 0.0 0.0 0.0 0.0 0.0
   EMISFACT L0003718     HRDOW 0.0 0.0 0.0 0.0 0.0 0.0
   EMISFACT L0003719     HRDOW 0.0 0.0 0.0 0.0 0.0 0.0
   EMISFACT L0003719     HRDOW 0.0 0.0 0.0 0.0 0.0 0.0
   EMISFACT L0003719     HRDOW 0.0 0.0 0.0 0.0 0.0 0.0
   EMISFACT L0003719     HRDOW 0.0 0.0 0.0 0.0 0.0 0.0
   EMISFACT L0003720     HRDOW 0.0 0.0 0.0 0.0 0.0 0.0
```

```
EMISFACT L0003720     HRDOW 0.0 0.0 0.0 0.0 0.0 0.0
EMISFACT L0003720     HRDOW 0.0 0.0 0.0 0.0 0.0 0.0
EMISFACT L0003720     HRDOW 0.0 0.0 0.0 0.0 0.0 0.0
EMISFACT L0003721     HRDOW 0.0 0.0 0.0 0.0 0.0 0.0
EMISFACT L0003721     HRDOW 0.0 0.0 0.0 0.0 0.0 0.0
EMISFACT L0003721     HRDOW 0.0 0.0 0.0 0.0 0.0 0.0
EMISFACT L0003721     HRDOW 0.0 0.0 0.0 0.0 0.0 0.0
EMISFACT L0003722     HRDOW 0.0 0.0 0.0 0.0 0.0 0.0
EMISFACT L0003722     HRDOW 0.0 0.0 0.0 0.0 0.0 0.0
EMISFACT L0003722     HRDOW 0.0 0.0 0.0 0.0 0.0 0.0
EMISFACT L0003722     HRDOW 0.0 0.0 0.0 0.0 0.0 0.0
EMISFACT L0003723     HRDOW 0.0 0.0 0.0 0.0 0.0 0.0
EMISFACT L0003723     HRDOW 0.0 0.0 0.0 0.0 0.0 0.0
EMISFACT L0003723     HRDOW 0.0 0.0 0.0 0.0 0.0 0.0
EMISFACT L0003723     HRDOW 0.0 0.0 0.0 0.0 0.0 0.0
EMISFACT L0003724     HRDOW 0.0 0.0 0.0 0.0 0.0 0.0
EMISFACT L0003724     HRDOW 0.0 0.0 0.0 0.0 0.0 0.0
EMISFACT L0003724     HRDOW 0.0 0.0 0.0 0.0 0.0 0.0
EMISFACT L0003724     HRDOW 0.0 0.0 0.0 0.0 0.0 0.0
EMISFACT L0003725     HRDOW 0.0 0.0 0.0 0.0 0.0 0.0
EMISFACT L0003725     HRDOW 0.0 0.0 0.0 0.0 0.0 0.0
EMISFACT L0003725     HRDOW 0.0 0.0 0.0 0.0 0.0 0.0
EMISFACT L0003725     HRDOW 0.0 0.0 0.0 0.0 0.0 0.0
EMISFACT L0003726     HRDOW 0.0 0.0 0.0 0.0 0.0 0.0
EMISFACT L0003726     HRDOW 0.0 0.0 0.0 0.0 0.0 0.0
EMISFACT L0003726     HRDOW 0.0 0.0 0.0 0.0 0.0 0.0
EMISFACT L0003726     HRDOW 0.0 0.0 0.0 0.0 0.0 0.0
EMISFACT L0003727     HRDOW 0.0 0.0 0.0 0.0 0.0 0.0
EMISFACT L0003727     HRDOW 0.0 0.0 0.0 0.0 0.0 0.0
EMISFACT L0003727     HRDOW 0.0 0.0 0.0 0.0 0.0 0.0
EMISFACT L0003727     HRDOW 0.0 0.0 0.0 0.0 0.0 0.0
EMISFACT L0003728     HRDOW 0.0 0.0 0.0 0.0 0.0 0.0
EMISFACT L0003728     HRDOW 0.0 0.0 0.0 0.0 0.0 0.0
EMISFACT L0003728     HRDOW 0.0 0.0 0.0 0.0 0.0 0.0
EMISFACT L0003728     HRDOW 0.0 0.0 0.0 0.0 0.0 0.0
EMISFACT L0003729     HRDOW 0.0 0.0 0.0 0.0 0.0 0.0
EMISFACT L0003729     HRDOW 0.0 0.0 0.0 0.0 0.0 0.0
EMISFACT L0003729     HRDOW 0.0 0.0 0.0 0.0 0.0 0.0
EMISFACT L0003729     HRDOW 0.0 0.0 0.0 0.0 0.0 0.0
EMISFACT L0003730     HRDOW 0.0 0.0 0.0 0.0 0.0 0.0
EMISFACT L0003730     HRDOW 0.0 0.0 0.0 0.0 0.0 0.0
EMISFACT L0003730     HRDOW 0.0 0.0 0.0 0.0 0.0 0.0
EMISFACT L0003730     HRDOW 0.0 0.0 0.0 0.0 0.0 0.0
EMISFACT L0003731     HRDOW 0.0 0.0 0.0 0.0 0.0 0.0
EMISFACT L0003731     HRDOW 0.0 0.0 0.0 0.0 0.0 0.0
EMISFACT L0003731     HRDOW 0.0 0.0 0.0 0.0 0.0 0.0
EMISFACT L0003731     HRDOW 0.0 0.0 0.0 0.0 0.0 0.0
EMISFACT L0003732     HRDOW 0.0 0.0 0.0 0.0 0.0 0.0
EMISFACT L0003732     HRDOW 0.0 0.0 0.0 0.0 0.0 0.0
EMISFACT L0003732     HRDOW 0.0 0.0 0.0 0.0 0.0 0.0
EMISFACT L0003732     HRDOW 0.0 0.0 0.0 0.0 0.0 0.0
EMISFACT L0003733     HRDOW 0.0 0.0 0.0 0.0 0.0 0.0
EMISFACT L0003733     HRDOW 0.0 0.0 0.0 0.0 0.0 0.0
EMISFACT L0003733     HRDOW 0.0 0.0 0.0 0.0 0.0 0.0
EMISFACT L0003733     HRDOW 0.0 0.0 0.0 0.0 0.0 0.0
EMISFACT L0003734     HRDOW 0.0 0.0 0.0 0.0 0.0 0.0
EMISFACT L0003734     HRDOW 0.0 0.0 0.0 0.0 0.0 0.0
EMISFACT L0003734     HRDOW 0.0 0.0 0.0 0.0 0.0 0.0
EMISFACT L0003734     HRDOW 0.0 0.0 0.0 0.0 0.0 0.0
```

```
EMISFACT L0003735     HRDOW 0.0 0.0 0.0 0.0 0.0 0.0
EMISFACT L0003735     HRDOW 0.0 0.0 0.0 0.0 0.0 0.0
EMISFACT L0003735     HRDOW 0.0 0.0 0.0 0.0 0.0 0.0
EMISFACT L0003735     HRDOW 0.0 0.0 0.0 0.0 0.0 0.0
EMISFACT L0003736     HRDOW 0.0 0.0 0.0 0.0 0.0 0.0
EMISFACT L0003736     HRDOW 0.0 0.0 0.0 0.0 0.0 0.0
EMISFACT L0003736     HRDOW 0.0 0.0 0.0 0.0 0.0 0.0
EMISFACT L0003736     HRDOW 0.0 0.0 0.0 0.0 0.0 0.0
EMISFACT L0003737     HRDOW 0.0 0.0 0.0 0.0 0.0 0.0
EMISFACT L0003737     HRDOW 0.0 0.0 0.0 0.0 0.0 0.0
EMISFACT L0003737     HRDOW 0.0 0.0 0.0 0.0 0.0 0.0
EMISFACT L0003737     HRDOW 0.0 0.0 0.0 0.0 0.0 0.0
EMISFACT L0003738     HRDOW 0.0 0.0 0.0 0.0 0.0 0.0
EMISFACT L0003738     HRDOW 0.0 0.0 0.0 0.0 0.0 0.0
EMISFACT L0003738     HRDOW 0.0 0.0 0.0 0.0 0.0 0.0
EMISFACT L0003738     HRDOW 0.0 0.0 0.0 0.0 0.0 0.0
EMISFACT L0003739     HRDOW 0.0 0.0 0.0 0.0 0.0 0.0
EMISFACT L0003739     HRDOW 0.0 0.0 0.0 0.0 0.0 0.0
EMISFACT L0003739     HRDOW 0.0 0.0 0.0 0.0 0.0 0.0
EMISFACT L0003739     HRDOW 0.0 0.0 0.0 0.0 0.0 0.0
EMISFACT L0003740     HRDOW 0.0 0.0 0.0 0.0 0.0 0.0
EMISFACT L0003740     HRDOW 0.0 0.0 0.0 0.0 0.0 0.0
EMISFACT L0003740     HRDOW 0.0 0.0 0.0 0.0 0.0 0.0
EMISFACT L0003740     HRDOW 0.0 0.0 0.0 0.0 0.0 0.0
EMISFACT L0003741     HRDOW 0.0 0.0 0.0 0.0 0.0 0.0
EMISFACT L0003741     HRDOW 0.0 0.0 0.0 0.0 0.0 0.0
EMISFACT L0003741     HRDOW 0.0 0.0 0.0 0.0 0.0 0.0
EMISFACT L0003741     HRDOW 0.0 0.0 0.0 0.0 0.0 0.0
EMISFACT L0003742     HRDOW 0.0 0.0 0.0 0.0 0.0 0.0
EMISFACT L0003742     HRDOW 0.0 0.0 0.0 0.0 0.0 0.0
EMISFACT L0003742     HRDOW 0.0 0.0 0.0 0.0 0.0 0.0
EMISFACT L0003742     HRDOW 0.0 0.0 0.0 0.0 0.0 0.0
EMISFACT L0003743     HRDOW 0.0 0.0 0.0 0.0 0.0 0.0
EMISFACT L0003743     HRDOW 0.0 0.0 0.0 0.0 0.0 0.0
EMISFACT L0003743     HRDOW 0.0 0.0 0.0 0.0 0.0 0.0
EMISFACT L0003743     HRDOW 0.0 0.0 0.0 0.0 0.0 0.0
EMISFACT L0003744     HRDOW 0.0 0.0 0.0 0.0 0.0 0.0
EMISFACT L0003744     HRDOW 0.0 0.0 0.0 0.0 0.0 0.0
EMISFACT L0003744     HRDOW 0.0 0.0 0.0 0.0 0.0 0.0
EMISFACT L0003744     HRDOW 0.0 0.0 0.0 0.0 0.0 0.0
EMISFACT L0003745     HRDOW 0.0 0.0 0.0 0.0 0.0 0.0
EMISFACT L0003745     HRDOW 0.0 0.0 0.0 0.0 0.0 0.0
EMISFACT L0003745     HRDOW 0.0 0.0 0.0 0.0 0.0 0.0
EMISFACT L0003745     HRDOW 0.0 0.0 0.0 0.0 0.0 0.0
EMISFACT L0003746     HRDOW 0.0 0.0 0.0 0.0 0.0 0.0
EMISFACT L0003746     HRDOW 0.0 0.0 0.0 0.0 0.0 0.0
EMISFACT L0003746     HRDOW 0.0 0.0 0.0 0.0 0.0 0.0
EMISFACT L0003746     HRDOW 0.0 0.0 0.0 0.0 0.0 0.0
EMISFACT L0003747     HRDOW 0.0 0.0 0.0 0.0 0.0 0.0
EMISFACT L0003747     HRDOW 0.0 0.0 0.0 0.0 0.0 0.0
EMISFACT L0003747     HRDOW 0.0 0.0 0.0 0.0 0.0 0.0
EMISFACT L0003747     HRDOW 0.0 0.0 0.0 0.0 0.0 0.0
EMISFACT L0003748     HRDOW 0.0 0.0 0.0 0.0 0.0 0.0
EMISFACT L0003748     HRDOW 0.0 0.0 0.0 0.0 0.0 0.0
EMISFACT L0003748     HRDOW 0.0 0.0 0.0 0.0 0.0 0.0
EMISFACT L0003748     HRDOW 0.0 0.0 0.0 0.0 0.0 0.0
EMISFACT L0003749     HRDOW 0.0 0.0 0.0 0.0 0.0 0.0
EMISFACT L0003749     HRDOW 0.0 0.0 0.0 0.0 0.0 0.0
EMISFACT L0003749     HRDOW 0.0 0.0 0.0 0.0 0.0 0.0
```

```
EMISFACT L0003749     HRDOW 0.0 0.0 0.0 0.0 0.0 0.0
EMISFACT L0003750     HRDOW 0.0 0.0 0.0 0.0 0.0 0.0
EMISFACT L0003750     HRDOW 0.0 0.0 0.0 0.0 0.0 0.0
EMISFACT L0003750     HRDOW 0.0 0.0 0.0 0.0 0.0 0.0
EMISFACT L0003750     HRDOW 0.0 0.0 0.0 0.0 0.0 0.0
EMISFACT L0003751     HRDOW 0.0 0.0 0.0 0.0 0.0 0.0
EMISFACT L0003751     HRDOW 0.0 0.0 0.0 0.0 0.0 0.0
EMISFACT L0003751     HRDOW 0.0 0.0 0.0 0.0 0.0 0.0
EMISFACT L0003751     HRDOW 0.0 0.0 0.0 0.0 0.0 0.0
EMISFACT L0003752     HRDOW 0.0 0.0 0.0 0.0 0.0 0.0
EMISFACT L0003752     HRDOW 0.0 0.0 0.0 0.0 0.0 0.0
EMISFACT L0003752     HRDOW 0.0 0.0 0.0 0.0 0.0 0.0
EMISFACT L0003752     HRDOW 0.0 0.0 0.0 0.0 0.0 0.0
EMISFACT L0003753     HRDOW 0.0 0.0 0.0 0.0 0.0 0.0
EMISFACT L0003753     HRDOW 0.0 0.0 0.0 0.0 0.0 0.0
EMISFACT L0003753     HRDOW 0.0 0.0 0.0 0.0 0.0 0.0
EMISFACT L0003753     HRDOW 0.0 0.0 0.0 0.0 0.0 0.0
EMISFACT L0003754     HRDOW 0.0 0.0 0.0 0.0 0.0 0.0
EMISFACT L0003754     HRDOW 0.0 0.0 0.0 0.0 0.0 0.0
EMISFACT L0003754     HRDOW 0.0 0.0 0.0 0.0 0.0 0.0
EMISFACT L0003754     HRDOW 0.0 0.0 0.0 0.0 0.0 0.0
EMISFACT L0003755     HRDOW 0.0 0.0 0.0 0.0 0.0 0.0
EMISFACT L0003755     HRDOW 0.0 0.0 0.0 0.0 0.0 0.0
EMISFACT L0003755     HRDOW 0.0 0.0 0.0 0.0 0.0 0.0
EMISFACT L0003755     HRDOW 0.0 0.0 0.0 0.0 0.0 0.0
EMISFACT L0003756     HRDOW 0.0 0.0 0.0 0.0 0.0 0.0
EMISFACT L0003756     HRDOW 0.0 0.0 0.0 0.0 0.0 0.0
EMISFACT L0003756     HRDOW 0.0 0.0 0.0 0.0 0.0 0.0
EMISFACT L0003756     HRDOW 0.0 0.0 0.0 0.0 0.0 0.0
EMISFACT L0003757     HRDOW 0.0 0.0 0.0 0.0 0.0 0.0
EMISFACT L0003757     HRDOW 0.0 0.0 0.0 0.0 0.0 0.0
EMISFACT L0003757     HRDOW 0.0 0.0 0.0 0.0 0.0 0.0
EMISFACT L0003757     HRDOW 0.0 0.0 0.0 0.0 0.0 0.0
EMISFACT L0003758     HRDOW 0.0 0.0 0.0 0.0 0.0 0.0
EMISFACT L0003758     HRDOW 0.0 0.0 0.0 0.0 0.0 0.0
EMISFACT L0003758     HRDOW 0.0 0.0 0.0 0.0 0.0 0.0
EMISFACT L0003758     HRDOW 0.0 0.0 0.0 0.0 0.0 0.0
EMISFACT L0003759     HRDOW 0.0 0.0 0.0 0.0 0.0 0.0
EMISFACT L0003759     HRDOW 0.0 0.0 0.0 0.0 0.0 0.0
EMISFACT L0003759     HRDOW 0.0 0.0 0.0 0.0 0.0 0.0
EMISFACT L0003759     HRDOW 0.0 0.0 0.0 0.0 0.0 0.0
EMISFACT L0003760     HRDOW 0.0 0.0 0.0 0.0 0.0 0.0
EMISFACT L0003760     HRDOW 0.0 0.0 0.0 0.0 0.0 0.0
EMISFACT L0003760     HRDOW 0.0 0.0 0.0 0.0 0.0 0.0
EMISFACT L0003760     HRDOW 0.0 0.0 0.0 0.0 0.0 0.0
EMISFACT L0003761     HRDOW 0.0 0.0 0.0 0.0 0.0 0.0
EMISFACT L0003761     HRDOW 0.0 0.0 0.0 0.0 0.0 0.0
EMISFACT L0003761     HRDOW 0.0 0.0 0.0 0.0 0.0 0.0
EMISFACT L0003761     HRDOW 0.0 0.0 0.0 0.0 0.0 0.0
EMISFACT L0003762     HRDOW 0.0 0.0 0.0 0.0 0.0 0.0
EMISFACT L0003762     HRDOW 0.0 0.0 0.0 0.0 0.0 0.0
EMISFACT L0003762     HRDOW 0.0 0.0 0.0 0.0 0.0 0.0
EMISFACT L0003762     HRDOW 0.0 0.0 0.0 0.0 0.0 0.0
EMISFACT L0003763     HRDOW 0.0 0.0 0.0 0.0 0.0 0.0
EMISFACT L0003763     HRDOW 0.0 0.0 0.0 0.0 0.0 0.0
EMISFACT L0003763     HRDOW 0.0 0.0 0.0 0.0 0.0 0.0
EMISFACT L0003763     HRDOW 0.0 0.0 0.0 0.0 0.0 0.0
EMISFACT L0003764     HRDOW 0.0 0.0 0.0 0.0 0.0 0.0
EMISFACT L0003764     HRDOW 0.0 0.0 0.0 0.0 0.0 0.0
```

```
   EMISFACT L0003764     HRDOW 0.0 0.0 0.0 0.0 0.0 0.0
   EMISFACT L0003764     HRDOW 0.0 0.0 0.0 0.0 0.0 0.0
   EMISFACT L0003765     HRDOW 0.0 0.0 0.0 0.0 0.0 0.0
   EMISFACT L0003765     HRDOW 0.0 0.0 0.0 0.0 0.0 0.0
   EMISFACT L0003765     HRDOW 0.0 0.0 0.0 0.0 0.0 0.0
   EMISFACT L0003765     HRDOW 0.0 0.0 0.0 0.0 0.0 0.0
   EMISFACT L0003766     HRDOW 0.0 0.0 0.0 0.0 0.0 0.0
   EMISFACT L0003766     HRDOW 0.0 0.0 0.0 0.0 0.0 0.0
   EMISFACT L0003766     HRDOW 0.0 0.0 0.0 0.0 0.0 0.0
   EMISFACT L0003766     HRDOW 0.0 0.0 0.0 0.0 0.0 0.0
   EMISFACT L0003767     HRDOW 0.0 0.0 0.0 0.0 0.0 0.0
   EMISFACT L0003767     HRDOW 0.0 0.0 0.0 0.0 0.0 0.0
   EMISFACT L0003767     HRDOW 0.0 0.0 0.0 0.0 0.0 0.0
   EMISFACT L0003767     HRDOW 0.0 0.0 0.0 0.0 0.0 0.0
   EMISFACT L0003768     HRDOW 0.0 0.0 0.0 0.0 0.0 0.0
   EMISFACT L0003768     HRDOW 0.0 0.0 0.0 0.0 0.0 0.0
   EMISFACT L0003768     HRDOW 0.0 0.0 0.0 0.0 0.0 0.0
   EMISFACT L0003768     HRDOW 0.0 0.0 0.0 0.0 0.0 0.0
** WeekDays:
   EMISFACT L0002339     HRDOW 0.0 0.0 0.0 0.0 0.0 0.0
   EMISFACT L0002339     HRDOW 1.0 1.0 1.0 1.0 1.0 1.0
   EMISFACT L0002339     HRDOW 1.0 1.0 1.0 1.0 0.0 0.0
   EMISFACT L0002339     HRDOW 0.0 0.0 0.0 0.0 0.0 0.0
   EMISFACT L0002340     HRDOW 0.0 0.0 0.0 0.0 0.0 0.0
   EMISFACT L0002340     HRDOW 1.0 1.0 1.0 1.0 1.0 1.0
   EMISFACT L0002340     HRDOW 1.0 1.0 1.0 1.0 0.0 0.0
   EMISFACT L0002340     HRDOW 0.0 0.0 0.0 0.0 0.0 0.0
   EMISFACT L0002341     HRDOW 0.0 0.0 0.0 0.0 0.0 0.0
   EMISFACT L0002341     HRDOW 1.0 1.0 1.0 1.0 1.0 1.0
   EMISFACT L0002341     HRDOW 1.0 1.0 1.0 1.0 0.0 0.0
   EMISFACT L0002341     HRDOW 0.0 0.0 0.0 0.0 0.0 0.0
   EMISFACT L0002342     HRDOW 0.0 0.0 0.0 0.0 0.0 0.0
   EMISFACT L0002342     HRDOW 1.0 1.0 1.0 1.0 1.0 1.0
   EMISFACT L0002342     HRDOW 1.0 1.0 1.0 1.0 0.0 0.0
   EMISFACT L0002342     HRDOW 0.0 0.0 0.0 0.0 0.0 0.0
   EMISFACT L0002343     HRDOW 0.0 0.0 0.0 0.0 0.0 0.0
   EMISFACT L0002343     HRDOW 1.0 1.0 1.0 1.0 1.0 1.0
   EMISFACT L0002343     HRDOW 1.0 1.0 1.0 1.0 0.0 0.0
   EMISFACT L0002343     HRDOW 0.0 0.0 0.0 0.0 0.0 0.0
   EMISFACT L0002344     HRDOW 0.0 0.0 0.0 0.0 0.0 0.0
   EMISFACT L0002344     HRDOW 1.0 1.0 1.0 1.0 1.0 1.0
   EMISFACT L0002344     HRDOW 1.0 1.0 1.0 1.0 0.0 0.0
   EMISFACT L0002344     HRDOW 0.0 0.0 0.0 0.0 0.0 0.0
   EMISFACT L0002345     HRDOW 0.0 0.0 0.0 0.0 0.0 0.0
   EMISFACT L0002345     HRDOW 1.0 1.0 1.0 1.0 1.0 1.0
   EMISFACT L0002345     HRDOW 1.0 1.0 1.0 1.0 0.0 0.0
   EMISFACT L0002345     HRDOW 0.0 0.0 0.0 0.0 0.0 0.0
   EMISFACT L0002346     HRDOW 0.0 0.0 0.0 0.0 0.0 0.0
   EMISFACT L0002346     HRDOW 1.0 1.0 1.0 1.0 1.0 1.0
   EMISFACT L0002346     HRDOW 1.0 1.0 1.0 1.0 0.0 0.0
   EMISFACT L0002346     HRDOW 0.0 0.0 0.0 0.0 0.0 0.0
   EMISFACT L0002347     HRDOW 0.0 0.0 0.0 0.0 0.0 0.0
   EMISFACT L0002347     HRDOW 1.0 1.0 1.0 1.0 1.0 1.0
   EMISFACT L0002347     HRDOW 1.0 1.0 1.0 1.0 0.0 0.0
   EMISFACT L0002347     HRDOW 0.0 0.0 0.0 0.0 0.0 0.0
   EMISFACT L0002348     HRDOW 0.0 0.0 0.0 0.0 0.0 0.0
   EMISFACT L0002348     HRDOW 1.0 1.0 1.0 1.0 1.0 1.0
   EMISFACT L0002348     HRDOW 1.0 1.0 1.0 1.0 0.0 0.0
   EMISFACT L0002348     HRDOW 0.0 0.0 0.0 0.0 0.0 0.0
```

```
EMISFACT L0002349     HRDOW 0.0 0.0 0.0 0.0 0.0 0.0
EMISFACT L0002349     HRDOW 1.0 1.0 1.0 1.0 1.0 1.0
EMISFACT L0002349     HRDOW 1.0 1.0 1.0 1.0 0.0 0.0
EMISFACT L0002349     HRDOW 0.0 0.0 0.0 0.0 0.0 0.0
EMISFACT L0002350     HRDOW 0.0 0.0 0.0 0.0 0.0 0.0
EMISFACT L0002350     HRDOW 1.0 1.0 1.0 1.0 1.0 1.0
EMISFACT L0002350     HRDOW 1.0 1.0 1.0 1.0 0.0 0.0
EMISFACT L0002350     HRDOW 0.0 0.0 0.0 0.0 0.0 0.0
EMISFACT L0002351     HRDOW 0.0 0.0 0.0 0.0 0.0 0.0
EMISFACT L0002351     HRDOW 1.0 1.0 1.0 1.0 1.0 1.0
EMISFACT L0002351     HRDOW 1.0 1.0 1.0 1.0 0.0 0.0
EMISFACT L0002351     HRDOW 0.0 0.0 0.0 0.0 0.0 0.0
EMISFACT L0002352     HRDOW 0.0 0.0 0.0 0.0 0.0 0.0
EMISFACT L0002352     HRDOW 1.0 1.0 1.0 1.0 1.0 1.0
EMISFACT L0002352     HRDOW 1.0 1.0 1.0 1.0 0.0 0.0
EMISFACT L0002352     HRDOW 0.0 0.0 0.0 0.0 0.0 0.0
EMISFACT L0002353     HRDOW 0.0 0.0 0.0 0.0 0.0 0.0
EMISFACT L0002353     HRDOW 1.0 1.0 1.0 1.0 1.0 1.0
EMISFACT L0002353     HRDOW 1.0 1.0 1.0 1.0 0.0 0.0
EMISFACT L0002353     HRDOW 0.0 0.0 0.0 0.0 0.0 0.0
EMISFACT L0002354     HRDOW 0.0 0.0 0.0 0.0 0.0 0.0
EMISFACT L0002354     HRDOW 1.0 1.0 1.0 1.0 1.0 1.0
EMISFACT L0002354     HRDOW 1.0 1.0 1.0 1.0 0.0 0.0
EMISFACT L0002354     HRDOW 0.0 0.0 0.0 0.0 0.0 0.0
EMISFACT L0002355     HRDOW 0.0 0.0 0.0 0.0 0.0 0.0
EMISFACT L0002355     HRDOW 1.0 1.0 1.0 1.0 1.0 1.0
EMISFACT L0002355     HRDOW 1.0 1.0 1.0 1.0 0.0 0.0
EMISFACT L0002355     HRDOW 0.0 0.0 0.0 0.0 0.0 0.0
EMISFACT L0002356     HRDOW 0.0 0.0 0.0 0.0 0.0 0.0
EMISFACT L0002356     HRDOW 1.0 1.0 1.0 1.0 1.0 1.0
EMISFACT L0002356     HRDOW 1.0 1.0 1.0 1.0 0.0 0.0
EMISFACT L0002356     HRDOW 0.0 0.0 0.0 0.0 0.0 0.0
EMISFACT L0002357     HRDOW 0.0 0.0 0.0 0.0 0.0 0.0
EMISFACT L0002357     HRDOW 1.0 1.0 1.0 1.0 1.0 1.0
EMISFACT L0002357     HRDOW 1.0 1.0 1.0 1.0 0.0 0.0
EMISFACT L0002357     HRDOW 0.0 0.0 0.0 0.0 0.0 0.0
EMISFACT L0002358     HRDOW 0.0 0.0 0.0 0.0 0.0 0.0
EMISFACT L0002358     HRDOW 1.0 1.0 1.0 1.0 1.0 1.0
EMISFACT L0002358     HRDOW 1.0 1.0 1.0 1.0 0.0 0.0
EMISFACT L0002358     HRDOW 0.0 0.0 0.0 0.0 0.0 0.0
EMISFACT L0002359     HRDOW 0.0 0.0 0.0 0.0 0.0 0.0
EMISFACT L0002359     HRDOW 1.0 1.0 1.0 1.0 1.0 1.0
EMISFACT L0002359     HRDOW 1.0 1.0 1.0 1.0 0.0 0.0
EMISFACT L0002359     HRDOW 0.0 0.0 0.0 0.0 0.0 0.0
EMISFACT L0002360     HRDOW 0.0 0.0 0.0 0.0 0.0 0.0
EMISFACT L0002360     HRDOW 1.0 1.0 1.0 1.0 1.0 1.0
EMISFACT L0002360     HRDOW 1.0 1.0 1.0 1.0 0.0 0.0
EMISFACT L0002360     HRDOW 0.0 0.0 0.0 0.0 0.0 0.0
EMISFACT L0002361     HRDOW 0.0 0.0 0.0 0.0 0.0 0.0
EMISFACT L0002361     HRDOW 1.0 1.0 1.0 1.0 1.0 1.0
EMISFACT L0002361     HRDOW 1.0 1.0 1.0 1.0 0.0 0.0
EMISFACT L0002361     HRDOW 0.0 0.0 0.0 0.0 0.0 0.0
EMISFACT L0002362     HRDOW 0.0 0.0 0.0 0.0 0.0 0.0
EMISFACT L0002362     HRDOW 1.0 1.0 1.0 1.0 1.0 1.0
EMISFACT L0002362     HRDOW 1.0 1.0 1.0 1.0 0.0 0.0
EMISFACT L0002362     HRDOW 0.0 0.0 0.0 0.0 0.0 0.0
EMISFACT L0002363     HRDOW 0.0 0.0 0.0 0.0 0.0 0.0
EMISFACT L0002363     HRDOW 1.0 1.0 1.0 1.0 1.0 1.0
EMISFACT L0002363     HRDOW 1.0 1.0 1.0 1.0 0.0 0.0
```

```
EMISFACT L0002363     HRDOW 0.0 0.0 0.0 0.0 0.0 0.0
EMISFACT L0002364     HRDOW 0.0 0.0 0.0 0.0 0.0 0.0
EMISFACT L0002364     HRDOW 1.0 1.0 1.0 1.0 1.0 1.0
EMISFACT L0002364     HRDOW 1.0 1.0 1.0 1.0 0.0 0.0
EMISFACT L0002364     HRDOW 0.0 0.0 0.0 0.0 0.0 0.0
EMISFACT L0002365     HRDOW 0.0 0.0 0.0 0.0 0.0 0.0
EMISFACT L0002365     HRDOW 1.0 1.0 1.0 1.0 1.0 1.0
EMISFACT L0002365     HRDOW 1.0 1.0 1.0 1.0 0.0 0.0
EMISFACT L0002365     HRDOW 0.0 0.0 0.0 0.0 0.0 0.0
EMISFACT L0002366     HRDOW 0.0 0.0 0.0 0.0 0.0 0.0
EMISFACT L0002366     HRDOW 1.0 1.0 1.0 1.0 1.0 1.0
EMISFACT L0002366     HRDOW 1.0 1.0 1.0 1.0 0.0 0.0
EMISFACT L0002366     HRDOW 0.0 0.0 0.0 0.0 0.0 0.0
EMISFACT L0002367     HRDOW 0.0 0.0 0.0 0.0 0.0 0.0
EMISFACT L0002367     HRDOW 1.0 1.0 1.0 1.0 1.0 1.0
EMISFACT L0002367     HRDOW 1.0 1.0 1.0 1.0 0.0 0.0
EMISFACT L0002367     HRDOW 0.0 0.0 0.0 0.0 0.0 0.0
EMISFACT L0002368     HRDOW 0.0 0.0 0.0 0.0 0.0 0.0
EMISFACT L0002368     HRDOW 1.0 1.0 1.0 1.0 1.0 1.0
EMISFACT L0002368     HRDOW 1.0 1.0 1.0 1.0 0.0 0.0
EMISFACT L0002368     HRDOW 0.0 0.0 0.0 0.0 0.0 0.0
EMISFACT L0002369     HRDOW 0.0 0.0 0.0 0.0 0.0 0.0
EMISFACT L0002369     HRDOW 1.0 1.0 1.0 1.0 1.0 1.0
EMISFACT L0002369     HRDOW 1.0 1.0 1.0 1.0 0.0 0.0
EMISFACT L0002369     HRDOW 0.0 0.0 0.0 0.0 0.0 0.0
EMISFACT L0002370     HRDOW 0.0 0.0 0.0 0.0 0.0 0.0
EMISFACT L0002370     HRDOW 1.0 1.0 1.0 1.0 1.0 1.0
EMISFACT L0002370     HRDOW 1.0 1.0 1.0 1.0 0.0 0.0
EMISFACT L0002370     HRDOW 0.0 0.0 0.0 0.0 0.0 0.0
EMISFACT L0002371     HRDOW 0.0 0.0 0.0 0.0 0.0 0.0
EMISFACT L0002371     HRDOW 1.0 1.0 1.0 1.0 1.0 1.0
EMISFACT L0002371     HRDOW 1.0 1.0 1.0 1.0 0.0 0.0
EMISFACT L0002371     HRDOW 0.0 0.0 0.0 0.0 0.0 0.0
EMISFACT L0002372     HRDOW 0.0 0.0 0.0 0.0 0.0 0.0
EMISFACT L0002372     HRDOW 1.0 1.0 1.0 1.0 1.0 1.0
EMISFACT L0002372     HRDOW 1.0 1.0 1.0 1.0 0.0 0.0
EMISFACT L0002372     HRDOW 0.0 0.0 0.0 0.0 0.0 0.0
EMISFACT L0002373     HRDOW 0.0 0.0 0.0 0.0 0.0 0.0
EMISFACT L0002373     HRDOW 1.0 1.0 1.0 1.0 1.0 1.0
EMISFACT L0002373     HRDOW 1.0 1.0 1.0 1.0 0.0 0.0
EMISFACT L0002373     HRDOW 0.0 0.0 0.0 0.0 0.0 0.0
EMISFACT L0002374     HRDOW 0.0 0.0 0.0 0.0 0.0 0.0
EMISFACT L0002374     HRDOW 1.0 1.0 1.0 1.0 1.0 1.0
EMISFACT L0002374     HRDOW 1.0 1.0 1.0 1.0 0.0 0.0
EMISFACT L0002374     HRDOW 0.0 0.0 0.0 0.0 0.0 0.0
EMISFACT L0002375     HRDOW 0.0 0.0 0.0 0.0 0.0 0.0
EMISFACT L0002375     HRDOW 1.0 1.0 1.0 1.0 1.0 1.0
EMISFACT L0002375     HRDOW 1.0 1.0 1.0 1.0 0.0 0.0
EMISFACT L0002375     HRDOW 0.0 0.0 0.0 0.0 0.0 0.0
EMISFACT L0002376     HRDOW 0.0 0.0 0.0 0.0 0.0 0.0
EMISFACT L0002376     HRDOW 1.0 1.0 1.0 1.0 1.0 1.0
EMISFACT L0002376     HRDOW 1.0 1.0 1.0 1.0 0.0 0.0
EMISFACT L0002376     HRDOW 0.0 0.0 0.0 0.0 0.0 0.0
EMISFACT L0002377     HRDOW 0.0 0.0 0.0 0.0 0.0 0.0
EMISFACT L0002377     HRDOW 1.0 1.0 1.0 1.0 1.0 1.0
EMISFACT L0002377     HRDOW 1.0 1.0 1.0 1.0 0.0 0.0
EMISFACT L0002377     HRDOW 0.0 0.0 0.0 0.0 0.0 0.0
EMISFACT L0002378     HRDOW 0.0 0.0 0.0 0.0 0.0 0.0
EMISFACT L0002378     HRDOW 1.0 1.0 1.0 1.0 1.0 1.0
```

```
EMISFACT L0002378     HRDOW 1.0 1.0 1.0 1.0 0.0 0.0
EMISFACT L0002378     HRDOW 0.0 0.0 0.0 0.0 0.0 0.0
EMISFACT L0002379     HRDOW 0.0 0.0 0.0 0.0 0.0 0.0
EMISFACT L0002379     HRDOW 1.0 1.0 1.0 1.0 1.0 1.0
EMISFACT L0002379     HRDOW 1.0 1.0 1.0 1.0 0.0 0.0
EMISFACT L0002379     HRDOW 0.0 0.0 0.0 0.0 0.0 0.0
EMISFACT L0002380     HRDOW 0.0 0.0 0.0 0.0 0.0 0.0
EMISFACT L0002380     HRDOW 1.0 1.0 1.0 1.0 1.0 1.0
EMISFACT L0002380     HRDOW 1.0 1.0 1.0 1.0 0.0 0.0
EMISFACT L0002380     HRDOW 0.0 0.0 0.0 0.0 0.0 0.0
EMISFACT L0002381     HRDOW 0.0 0.0 0.0 0.0 0.0 0.0
EMISFACT L0002381     HRDOW 1.0 1.0 1.0 1.0 1.0 1.0
EMISFACT L0002381     HRDOW 1.0 1.0 1.0 1.0 0.0 0.0
EMISFACT L0002381     HRDOW 0.0 0.0 0.0 0.0 0.0 0.0
EMISFACT L0002382     HRDOW 0.0 0.0 0.0 0.0 0.0 0.0
EMISFACT L0002382     HRDOW 1.0 1.0 1.0 1.0 1.0 1.0
EMISFACT L0002382     HRDOW 1.0 1.0 1.0 1.0 0.0 0.0
EMISFACT L0002382     HRDOW 0.0 0.0 0.0 0.0 0.0 0.0
EMISFACT L0002383     HRDOW 0.0 0.0 0.0 0.0 0.0 0.0
EMISFACT L0002383     HRDOW 1.0 1.0 1.0 1.0 1.0 1.0
EMISFACT L0002383     HRDOW 1.0 1.0 1.0 1.0 0.0 0.0
EMISFACT L0002383     HRDOW 0.0 0.0 0.0 0.0 0.0 0.0
EMISFACT L0002384     HRDOW 0.0 0.0 0.0 0.0 0.0 0.0
EMISFACT L0002384     HRDOW 1.0 1.0 1.0 1.0 1.0 1.0
EMISFACT L0002384     HRDOW 1.0 1.0 1.0 1.0 0.0 0.0
EMISFACT L0002384     HRDOW 0.0 0.0 0.0 0.0 0.0 0.0
EMISFACT L0002385     HRDOW 0.0 0.0 0.0 0.0 0.0 0.0
EMISFACT L0002385     HRDOW 1.0 1.0 1.0 1.0 1.0 1.0
EMISFACT L0002385     HRDOW 1.0 1.0 1.0 1.0 0.0 0.0
EMISFACT L0002385     HRDOW 0.0 0.0 0.0 0.0 0.0 0.0
EMISFACT L0002386     HRDOW 0.0 0.0 0.0 0.0 0.0 0.0
EMISFACT L0002386     HRDOW 1.0 1.0 1.0 1.0 1.0 1.0
EMISFACT L0002386     HRDOW 1.0 1.0 1.0 1.0 0.0 0.0
EMISFACT L0002386     HRDOW 0.0 0.0 0.0 0.0 0.0 0.0
EMISFACT L0002387     HRDOW 0.0 0.0 0.0 0.0 0.0 0.0
EMISFACT L0002387     HRDOW 1.0 1.0 1.0 1.0 1.0 1.0
EMISFACT L0002387     HRDOW 1.0 1.0 1.0 1.0 0.0 0.0
EMISFACT L0002387     HRDOW 0.0 0.0 0.0 0.0 0.0 0.0
EMISFACT L0002388     HRDOW 0.0 0.0 0.0 0.0 0.0 0.0
EMISFACT L0002388     HRDOW 1.0 1.0 1.0 1.0 1.0 1.0
EMISFACT L0002388     HRDOW 1.0 1.0 1.0 1.0 0.0 0.0
EMISFACT L0002388     HRDOW 0.0 0.0 0.0 0.0 0.0 0.0
EMISFACT L0002389     HRDOW 0.0 0.0 0.0 0.0 0.0 0.0
EMISFACT L0002389     HRDOW 1.0 1.0 1.0 1.0 1.0 1.0
EMISFACT L0002389     HRDOW 1.0 1.0 1.0 1.0 0.0 0.0
EMISFACT L0002389     HRDOW 0.0 0.0 0.0 0.0 0.0 0.0
EMISFACT L0002390     HRDOW 0.0 0.0 0.0 0.0 0.0 0.0
EMISFACT L0002390     HRDOW 1.0 1.0 1.0 1.0 1.0 1.0
EMISFACT L0002390     HRDOW 1.0 1.0 1.0 1.0 0.0 0.0
EMISFACT L0002390     HRDOW 0.0 0.0 0.0 0.0 0.0 0.0
EMISFACT L0002391     HRDOW 0.0 0.0 0.0 0.0 0.0 0.0
EMISFACT L0002391     HRDOW 1.0 1.0 1.0 1.0 1.0 1.0
EMISFACT L0002391     HRDOW 1.0 1.0 1.0 1.0 0.0 0.0
EMISFACT L0002391     HRDOW 0.0 0.0 0.0 0.0 0.0 0.0
EMISFACT L0002392     HRDOW 0.0 0.0 0.0 0.0 0.0 0.0
EMISFACT L0002392     HRDOW 1.0 1.0 1.0 1.0 1.0 1.0
EMISFACT L0002392     HRDOW 1.0 1.0 1.0 1.0 0.0 0.0
EMISFACT L0002392     HRDOW 0.0 0.0 0.0 0.0 0.0 0.0
EMISFACT L0002393     HRDOW 0.0 0.0 0.0 0.0 0.0 0.0
```

```
EMISFACT L0002393     HRDOW 1.0 1.0 1.0 1.0 1.0 1.0
EMISFACT L0002393     HRDOW 1.0 1.0 1.0 1.0 0.0 0.0
EMISFACT L0002393     HRDOW 0.0 0.0 0.0 0.0 0.0 0.0
EMISFACT L0002394     HRDOW 0.0 0.0 0.0 0.0 0.0 0.0
EMISFACT L0002394     HRDOW 1.0 1.0 1.0 1.0 1.0 1.0
EMISFACT L0002394     HRDOW 1.0 1.0 1.0 1.0 0.0 0.0
EMISFACT L0002394     HRDOW 0.0 0.0 0.0 0.0 0.0 0.0
EMISFACT L0002395     HRDOW 0.0 0.0 0.0 0.0 0.0 0.0
EMISFACT L0002395     HRDOW 1.0 1.0 1.0 1.0 1.0 1.0
EMISFACT L0002395     HRDOW 1.0 1.0 1.0 1.0 0.0 0.0
EMISFACT L0002395     HRDOW 0.0 0.0 0.0 0.0 0.0 0.0
EMISFACT L0002396     HRDOW 0.0 0.0 0.0 0.0 0.0 0.0
EMISFACT L0002396     HRDOW 1.0 1.0 1.0 1.0 1.0 1.0
EMISFACT L0002396     HRDOW 1.0 1.0 1.0 1.0 0.0 0.0
EMISFACT L0002396     HRDOW 0.0 0.0 0.0 0.0 0.0 0.0
EMISFACT L0002397     HRDOW 0.0 0.0 0.0 0.0 0.0 0.0
EMISFACT L0002397     HRDOW 1.0 1.0 1.0 1.0 1.0 1.0
EMISFACT L0002397     HRDOW 1.0 1.0 1.0 1.0 0.0 0.0
EMISFACT L0002397     HRDOW 0.0 0.0 0.0 0.0 0.0 0.0
EMISFACT L0002398     HRDOW 0.0 0.0 0.0 0.0 0.0 0.0
EMISFACT L0002398     HRDOW 1.0 1.0 1.0 1.0 1.0 1.0
EMISFACT L0002398     HRDOW 1.0 1.0 1.0 1.0 0.0 0.0
EMISFACT L0002398     HRDOW 0.0 0.0 0.0 0.0 0.0 0.0
EMISFACT L0002399     HRDOW 0.0 0.0 0.0 0.0 0.0 0.0
EMISFACT L0002399     HRDOW 1.0 1.0 1.0 1.0 1.0 1.0
EMISFACT L0002399     HRDOW 1.0 1.0 1.0 1.0 0.0 0.0
EMISFACT L0002399     HRDOW 0.0 0.0 0.0 0.0 0.0 0.0
EMISFACT L0002400     HRDOW 0.0 0.0 0.0 0.0 0.0 0.0
EMISFACT L0002400     HRDOW 1.0 1.0 1.0 1.0 1.0 1.0
EMISFACT L0002400     HRDOW 1.0 1.0 1.0 1.0 0.0 0.0
EMISFACT L0002400     HRDOW 0.0 0.0 0.0 0.0 0.0 0.0
EMISFACT L0002401     HRDOW 0.0 0.0 0.0 0.0 0.0 0.0
EMISFACT L0002401     HRDOW 1.0 1.0 1.0 1.0 1.0 1.0
EMISFACT L0002401     HRDOW 1.0 1.0 1.0 1.0 0.0 0.0
EMISFACT L0002401     HRDOW 0.0 0.0 0.0 0.0 0.0 0.0
EMISFACT L0002402     HRDOW 0.0 0.0 0.0 0.0 0.0 0.0
EMISFACT L0002402     HRDOW 1.0 1.0 1.0 1.0 1.0 1.0
EMISFACT L0002402     HRDOW 1.0 1.0 1.0 1.0 0.0 0.0
EMISFACT L0002402     HRDOW 0.0 0.0 0.0 0.0 0.0 0.0
EMISFACT L0002403     HRDOW 0.0 0.0 0.0 0.0 0.0 0.0
EMISFACT L0002403     HRDOW 1.0 1.0 1.0 1.0 1.0 1.0
EMISFACT L0002403     HRDOW 1.0 1.0 1.0 1.0 0.0 0.0
EMISFACT L0002403     HRDOW 0.0 0.0 0.0 0.0 0.0 0.0
EMISFACT L0002404     HRDOW 0.0 0.0 0.0 0.0 0.0 0.0
EMISFACT L0002404     HRDOW 1.0 1.0 1.0 1.0 1.0 1.0
EMISFACT L0002404     HRDOW 1.0 1.0 1.0 1.0 0.0 0.0
EMISFACT L0002404     HRDOW 0.0 0.0 0.0 0.0 0.0 0.0
EMISFACT L0002405     HRDOW 0.0 0.0 0.0 0.0 0.0 0.0
EMISFACT L0002405     HRDOW 1.0 1.0 1.0 1.0 1.0 1.0
EMISFACT L0002405     HRDOW 1.0 1.0 1.0 1.0 0.0 0.0
EMISFACT L0002405     HRDOW 0.0 0.0 0.0 0.0 0.0 0.0
EMISFACT L0002406     HRDOW 0.0 0.0 0.0 0.0 0.0 0.0
EMISFACT L0002406     HRDOW 1.0 1.0 1.0 1.0 1.0 1.0
EMISFACT L0002406     HRDOW 1.0 1.0 1.0 1.0 0.0 0.0
EMISFACT L0002406     HRDOW 0.0 0.0 0.0 0.0 0.0 0.0
EMISFACT L0002407     HRDOW 0.0 0.0 0.0 0.0 0.0 0.0
EMISFACT L0002407     HRDOW 1.0 1.0 1.0 1.0 1.0 1.0
EMISFACT L0002407     HRDOW 1.0 1.0 1.0 1.0 0.0 0.0
EMISFACT L0002407     HRDOW 0.0 0.0 0.0 0.0 0.0 0.0
```

```
** Saturday:
   EMISFACT L0002339     HRDOW 0.0 0.0 0.0 0.0 0.0 0.0
   EMISFACT L0002339     HRDOW 0.0 0.0 0.0 0.0 0.0 0.0
   EMISFACT L0002339     HRDOW 0.0 0.0 0.0 0.0 0.0 0.0
   EMISFACT L0002339     HRDOW 0.0 0.0 0.0 0.0 0.0 0.0
   EMISFACT L0002340     HRDOW 0.0 0.0 0.0 0.0 0.0 0.0
   EMISFACT L0002340     HRDOW 0.0 0.0 0.0 0.0 0.0 0.0
   EMISFACT L0002340     HRDOW 0.0 0.0 0.0 0.0 0.0 0.0
   EMISFACT L0002340     HRDOW 0.0 0.0 0.0 0.0 0.0 0.0
   EMISFACT L0002341     HRDOW 0.0 0.0 0.0 0.0 0.0 0.0
   EMISFACT L0002341     HRDOW 0.0 0.0 0.0 0.0 0.0 0.0
   EMISFACT L0002341     HRDOW 0.0 0.0 0.0 0.0 0.0 0.0
   EMISFACT L0002341     HRDOW 0.0 0.0 0.0 0.0 0.0 0.0
   EMISFACT L0002342     HRDOW 0.0 0.0 0.0 0.0 0.0 0.0
   EMISFACT L0002342     HRDOW 0.0 0.0 0.0 0.0 0.0 0.0
   EMISFACT L0002342     HRDOW 0.0 0.0 0.0 0.0 0.0 0.0
   EMISFACT L0002342     HRDOW 0.0 0.0 0.0 0.0 0.0 0.0
   EMISFACT L0002343     HRDOW 0.0 0.0 0.0 0.0 0.0 0.0
   EMISFACT L0002343     HRDOW 0.0 0.0 0.0 0.0 0.0 0.0
   EMISFACT L0002343     HRDOW 0.0 0.0 0.0 0.0 0.0 0.0
   EMISFACT L0002343     HRDOW 0.0 0.0 0.0 0.0 0.0 0.0
   EMISFACT L0002344     HRDOW 0.0 0.0 0.0 0.0 0.0 0.0
   EMISFACT L0002344     HRDOW 0.0 0.0 0.0 0.0 0.0 0.0
   EMISFACT L0002344     HRDOW 0.0 0.0 0.0 0.0 0.0 0.0
   EMISFACT L0002344     HRDOW 0.0 0.0 0.0 0.0 0.0 0.0
   EMISFACT L0002345     HRDOW 0.0 0.0 0.0 0.0 0.0 0.0
   EMISFACT L0002345     HRDOW 0.0 0.0 0.0 0.0 0.0 0.0
   EMISFACT L0002345     HRDOW 0.0 0.0 0.0 0.0 0.0 0.0
   EMISFACT L0002345     HRDOW 0.0 0.0 0.0 0.0 0.0 0.0
   EMISFACT L0002346     HRDOW 0.0 0.0 0.0 0.0 0.0 0.0
   EMISFACT L0002346     HRDOW 0.0 0.0 0.0 0.0 0.0 0.0
   EMISFACT L0002346     HRDOW 0.0 0.0 0.0 0.0 0.0 0.0
   EMISFACT L0002346     HRDOW 0.0 0.0 0.0 0.0 0.0 0.0
   EMISFACT L0002347     HRDOW 0.0 0.0 0.0 0.0 0.0 0.0
   EMISFACT L0002347     HRDOW 0.0 0.0 0.0 0.0 0.0 0.0
   EMISFACT L0002347     HRDOW 0.0 0.0 0.0 0.0 0.0 0.0
   EMISFACT L0002347     HRDOW 0.0 0.0 0.0 0.0 0.0 0.0
   EMISFACT L0002348     HRDOW 0.0 0.0 0.0 0.0 0.0 0.0
   EMISFACT L0002348     HRDOW 0.0 0.0 0.0 0.0 0.0 0.0
   EMISFACT L0002348     HRDOW 0.0 0.0 0.0 0.0 0.0 0.0
   EMISFACT L0002348     HRDOW 0.0 0.0 0.0 0.0 0.0 0.0
   EMISFACT L0002349     HRDOW 0.0 0.0 0.0 0.0 0.0 0.0
   EMISFACT L0002349     HRDOW 0.0 0.0 0.0 0.0 0.0 0.0
   EMISFACT L0002349     HRDOW 0.0 0.0 0.0 0.0 0.0 0.0
   EMISFACT L0002349     HRDOW 0.0 0.0 0.0 0.0 0.0 0.0
   EMISFACT L0002350     HRDOW 0.0 0.0 0.0 0.0 0.0 0.0
   EMISFACT L0002350     HRDOW 0.0 0.0 0.0 0.0 0.0 0.0
   EMISFACT L0002350     HRDOW 0.0 0.0 0.0 0.0 0.0 0.0
   EMISFACT L0002350     HRDOW 0.0 0.0 0.0 0.0 0.0 0.0
   EMISFACT L0002351     HRDOW 0.0 0.0 0.0 0.0 0.0 0.0
   EMISFACT L0002351     HRDOW 0.0 0.0 0.0 0.0 0.0 0.0
   EMISFACT L0002351     HRDOW 0.0 0.0 0.0 0.0 0.0 0.0
   EMISFACT L0002351     HRDOW 0.0 0.0 0.0 0.0 0.0 0.0
   EMISFACT L0002352     HRDOW 0.0 0.0 0.0 0.0 0.0 0.0
   EMISFACT L0002352     HRDOW 0.0 0.0 0.0 0.0 0.0 0.0
   EMISFACT L0002352     HRDOW 0.0 0.0 0.0 0.0 0.0 0.0
   EMISFACT L0002352     HRDOW 0.0 0.0 0.0 0.0 0.0 0.0
   EMISFACT L0002353     HRDOW 0.0 0.0 0.0 0.0 0.0 0.0
   EMISFACT L0002353     HRDOW 0.0 0.0 0.0 0.0 0.0 0.0
```

```
EMISFACT L0002353     HRDOW 0.0 0.0 0.0 0.0 0.0 0.0
EMISFACT L0002353     HRDOW 0.0 0.0 0.0 0.0 0.0 0.0
EMISFACT L0002354     HRDOW 0.0 0.0 0.0 0.0 0.0 0.0
EMISFACT L0002354     HRDOW 0.0 0.0 0.0 0.0 0.0 0.0
EMISFACT L0002354     HRDOW 0.0 0.0 0.0 0.0 0.0 0.0
EMISFACT L0002354     HRDOW 0.0 0.0 0.0 0.0 0.0 0.0
EMISFACT L0002355     HRDOW 0.0 0.0 0.0 0.0 0.0 0.0
EMISFACT L0002355     HRDOW 0.0 0.0 0.0 0.0 0.0 0.0
EMISFACT L0002355     HRDOW 0.0 0.0 0.0 0.0 0.0 0.0
EMISFACT L0002355     HRDOW 0.0 0.0 0.0 0.0 0.0 0.0
EMISFACT L0002356     HRDOW 0.0 0.0 0.0 0.0 0.0 0.0
EMISFACT L0002356     HRDOW 0.0 0.0 0.0 0.0 0.0 0.0
EMISFACT L0002356     HRDOW 0.0 0.0 0.0 0.0 0.0 0.0
EMISFACT L0002356     HRDOW 0.0 0.0 0.0 0.0 0.0 0.0
EMISFACT L0002357     HRDOW 0.0 0.0 0.0 0.0 0.0 0.0
EMISFACT L0002357     HRDOW 0.0 0.0 0.0 0.0 0.0 0.0
EMISFACT L0002357     HRDOW 0.0 0.0 0.0 0.0 0.0 0.0
EMISFACT L0002357     HRDOW 0.0 0.0 0.0 0.0 0.0 0.0
EMISFACT L0002358     HRDOW 0.0 0.0 0.0 0.0 0.0 0.0
EMISFACT L0002358     HRDOW 0.0 0.0 0.0 0.0 0.0 0.0
EMISFACT L0002358     HRDOW 0.0 0.0 0.0 0.0 0.0 0.0
EMISFACT L0002358     HRDOW 0.0 0.0 0.0 0.0 0.0 0.0
EMISFACT L0002359     HRDOW 0.0 0.0 0.0 0.0 0.0 0.0
EMISFACT L0002359     HRDOW 0.0 0.0 0.0 0.0 0.0 0.0
EMISFACT L0002359     HRDOW 0.0 0.0 0.0 0.0 0.0 0.0
EMISFACT L0002359     HRDOW 0.0 0.0 0.0 0.0 0.0 0.0
EMISFACT L0002360     HRDOW 0.0 0.0 0.0 0.0 0.0 0.0
EMISFACT L0002360     HRDOW 0.0 0.0 0.0 0.0 0.0 0.0
EMISFACT L0002360     HRDOW 0.0 0.0 0.0 0.0 0.0 0.0
EMISFACT L0002360     HRDOW 0.0 0.0 0.0 0.0 0.0 0.0
EMISFACT L0002361     HRDOW 0.0 0.0 0.0 0.0 0.0 0.0
EMISFACT L0002361     HRDOW 0.0 0.0 0.0 0.0 0.0 0.0
EMISFACT L0002361     HRDOW 0.0 0.0 0.0 0.0 0.0 0.0
EMISFACT L0002361     HRDOW 0.0 0.0 0.0 0.0 0.0 0.0
EMISFACT L0002362     HRDOW 0.0 0.0 0.0 0.0 0.0 0.0
EMISFACT L0002362     HRDOW 0.0 0.0 0.0 0.0 0.0 0.0
EMISFACT L0002362     HRDOW 0.0 0.0 0.0 0.0 0.0 0.0
EMISFACT L0002362     HRDOW 0.0 0.0 0.0 0.0 0.0 0.0
EMISFACT L0002363     HRDOW 0.0 0.0 0.0 0.0 0.0 0.0
EMISFACT L0002363     HRDOW 0.0 0.0 0.0 0.0 0.0 0.0
EMISFACT L0002363     HRDOW 0.0 0.0 0.0 0.0 0.0 0.0
EMISFACT L0002363     HRDOW 0.0 0.0 0.0 0.0 0.0 0.0
EMISFACT L0002364     HRDOW 0.0 0.0 0.0 0.0 0.0 0.0
EMISFACT L0002364     HRDOW 0.0 0.0 0.0 0.0 0.0 0.0
EMISFACT L0002364     HRDOW 0.0 0.0 0.0 0.0 0.0 0.0
EMISFACT L0002364     HRDOW 0.0 0.0 0.0 0.0 0.0 0.0
EMISFACT L0002365     HRDOW 0.0 0.0 0.0 0.0 0.0 0.0
EMISFACT L0002365     HRDOW 0.0 0.0 0.0 0.0 0.0 0.0
EMISFACT L0002365     HRDOW 0.0 0.0 0.0 0.0 0.0 0.0
EMISFACT L0002365     HRDOW 0.0 0.0 0.0 0.0 0.0 0.0
EMISFACT L0002366     HRDOW 0.0 0.0 0.0 0.0 0.0 0.0
EMISFACT L0002366     HRDOW 0.0 0.0 0.0 0.0 0.0 0.0
EMISFACT L0002366     HRDOW 0.0 0.0 0.0 0.0 0.0 0.0
EMISFACT L0002366     HRDOW 0.0 0.0 0.0 0.0 0.0 0.0
EMISFACT L0002367     HRDOW 0.0 0.0 0.0 0.0 0.0 0.0
EMISFACT L0002367     HRDOW 0.0 0.0 0.0 0.0 0.0 0.0
EMISFACT L0002367     HRDOW 0.0 0.0 0.0 0.0 0.0 0.0
EMISFACT L0002367     HRDOW 0.0 0.0 0.0 0.0 0.0 0.0
EMISFACT L0002368     HRDOW 0.0 0.0 0.0 0.0 0.0 0.0
```

```
EMISFACT L0002368     HRDOW 0.0 0.0 0.0 0.0 0.0 0.0
EMISFACT L0002368     HRDOW 0.0 0.0 0.0 0.0 0.0 0.0
EMISFACT L0002368     HRDOW 0.0 0.0 0.0 0.0 0.0 0.0
EMISFACT L0002369     HRDOW 0.0 0.0 0.0 0.0 0.0 0.0
EMISFACT L0002369     HRDOW 0.0 0.0 0.0 0.0 0.0 0.0
EMISFACT L0002369     HRDOW 0.0 0.0 0.0 0.0 0.0 0.0
EMISFACT L0002369     HRDOW 0.0 0.0 0.0 0.0 0.0 0.0
EMISFACT L0002370     HRDOW 0.0 0.0 0.0 0.0 0.0 0.0
EMISFACT L0002370     HRDOW 0.0 0.0 0.0 0.0 0.0 0.0
EMISFACT L0002370     HRDOW 0.0 0.0 0.0 0.0 0.0 0.0
EMISFACT L0002370     HRDOW 0.0 0.0 0.0 0.0 0.0 0.0
EMISFACT L0002371     HRDOW 0.0 0.0 0.0 0.0 0.0 0.0
EMISFACT L0002371     HRDOW 0.0 0.0 0.0 0.0 0.0 0.0
EMISFACT L0002371     HRDOW 0.0 0.0 0.0 0.0 0.0 0.0
EMISFACT L0002371     HRDOW 0.0 0.0 0.0 0.0 0.0 0.0
EMISFACT L0002372     HRDOW 0.0 0.0 0.0 0.0 0.0 0.0
EMISFACT L0002372     HRDOW 0.0 0.0 0.0 0.0 0.0 0.0
EMISFACT L0002372     HRDOW 0.0 0.0 0.0 0.0 0.0 0.0
EMISFACT L0002372     HRDOW 0.0 0.0 0.0 0.0 0.0 0.0
EMISFACT L0002373     HRDOW 0.0 0.0 0.0 0.0 0.0 0.0
EMISFACT L0002373     HRDOW 0.0 0.0 0.0 0.0 0.0 0.0
EMISFACT L0002373     HRDOW 0.0 0.0 0.0 0.0 0.0 0.0
EMISFACT L0002373     HRDOW 0.0 0.0 0.0 0.0 0.0 0.0
EMISFACT L0002374     HRDOW 0.0 0.0 0.0 0.0 0.0 0.0
EMISFACT L0002374     HRDOW 0.0 0.0 0.0 0.0 0.0 0.0
EMISFACT L0002374     HRDOW 0.0 0.0 0.0 0.0 0.0 0.0
EMISFACT L0002374     HRDOW 0.0 0.0 0.0 0.0 0.0 0.0
EMISFACT L0002375     HRDOW 0.0 0.0 0.0 0.0 0.0 0.0
EMISFACT L0002375     HRDOW 0.0 0.0 0.0 0.0 0.0 0.0
EMISFACT L0002375     HRDOW 0.0 0.0 0.0 0.0 0.0 0.0
EMISFACT L0002375     HRDOW 0.0 0.0 0.0 0.0 0.0 0.0
EMISFACT L0002376     HRDOW 0.0 0.0 0.0 0.0 0.0 0.0
EMISFACT L0002376     HRDOW 0.0 0.0 0.0 0.0 0.0 0.0
EMISFACT L0002376     HRDOW 0.0 0.0 0.0 0.0 0.0 0.0
EMISFACT L0002376     HRDOW 0.0 0.0 0.0 0.0 0.0 0.0
EMISFACT L0002377     HRDOW 0.0 0.0 0.0 0.0 0.0 0.0
EMISFACT L0002377     HRDOW 0.0 0.0 0.0 0.0 0.0 0.0
EMISFACT L0002377     HRDOW 0.0 0.0 0.0 0.0 0.0 0.0
EMISFACT L0002377     HRDOW 0.0 0.0 0.0 0.0 0.0 0.0
EMISFACT L0002378     HRDOW 0.0 0.0 0.0 0.0 0.0 0.0
EMISFACT L0002378     HRDOW 0.0 0.0 0.0 0.0 0.0 0.0
EMISFACT L0002378     HRDOW 0.0 0.0 0.0 0.0 0.0 0.0
EMISFACT L0002378     HRDOW 0.0 0.0 0.0 0.0 0.0 0.0
EMISFACT L0002379     HRDOW 0.0 0.0 0.0 0.0 0.0 0.0
EMISFACT L0002379     HRDOW 0.0 0.0 0.0 0.0 0.0 0.0
EMISFACT L0002379     HRDOW 0.0 0.0 0.0 0.0 0.0 0.0
EMISFACT L0002379     HRDOW 0.0 0.0 0.0 0.0 0.0 0.0
EMISFACT L0002380     HRDOW 0.0 0.0 0.0 0.0 0.0 0.0
EMISFACT L0002380     HRDOW 0.0 0.0 0.0 0.0 0.0 0.0
EMISFACT L0002380     HRDOW 0.0 0.0 0.0 0.0 0.0 0.0
EMISFACT L0002380     HRDOW 0.0 0.0 0.0 0.0 0.0 0.0
EMISFACT L0002381     HRDOW 0.0 0.0 0.0 0.0 0.0 0.0
EMISFACT L0002381     HRDOW 0.0 0.0 0.0 0.0 0.0 0.0
EMISFACT L0002381     HRDOW 0.0 0.0 0.0 0.0 0.0 0.0
EMISFACT L0002381     HRDOW 0.0 0.0 0.0 0.0 0.0 0.0
EMISFACT L0002382     HRDOW 0.0 0.0 0.0 0.0 0.0 0.0
EMISFACT L0002382     HRDOW 0.0 0.0 0.0 0.0 0.0 0.0
EMISFACT L0002382     HRDOW 0.0 0.0 0.0 0.0 0.0 0.0
EMISFACT L0002382     HRDOW 0.0 0.0 0.0 0.0 0.0 0.0
```

```
EMISFACT L0002383     HRDOW 0.0 0.0 0.0 0.0 0.0 0.0
EMISFACT L0002383     HRDOW 0.0 0.0 0.0 0.0 0.0 0.0
EMISFACT L0002383     HRDOW 0.0 0.0 0.0 0.0 0.0 0.0
EMISFACT L0002383     HRDOW 0.0 0.0 0.0 0.0 0.0 0.0
EMISFACT L0002384     HRDOW 0.0 0.0 0.0 0.0 0.0 0.0
EMISFACT L0002384     HRDOW 0.0 0.0 0.0 0.0 0.0 0.0
EMISFACT L0002384     HRDOW 0.0 0.0 0.0 0.0 0.0 0.0
EMISFACT L0002384     HRDOW 0.0 0.0 0.0 0.0 0.0 0.0
EMISFACT L0002385     HRDOW 0.0 0.0 0.0 0.0 0.0 0.0
EMISFACT L0002385     HRDOW 0.0 0.0 0.0 0.0 0.0 0.0
EMISFACT L0002385     HRDOW 0.0 0.0 0.0 0.0 0.0 0.0
EMISFACT L0002385     HRDOW 0.0 0.0 0.0 0.0 0.0 0.0
EMISFACT L0002386     HRDOW 0.0 0.0 0.0 0.0 0.0 0.0
EMISFACT L0002386     HRDOW 0.0 0.0 0.0 0.0 0.0 0.0
EMISFACT L0002386     HRDOW 0.0 0.0 0.0 0.0 0.0 0.0
EMISFACT L0002386     HRDOW 0.0 0.0 0.0 0.0 0.0 0.0
EMISFACT L0002387     HRDOW 0.0 0.0 0.0 0.0 0.0 0.0
EMISFACT L0002387     HRDOW 0.0 0.0 0.0 0.0 0.0 0.0
EMISFACT L0002387     HRDOW 0.0 0.0 0.0 0.0 0.0 0.0
EMISFACT L0002387     HRDOW 0.0 0.0 0.0 0.0 0.0 0.0
EMISFACT L0002388     HRDOW 0.0 0.0 0.0 0.0 0.0 0.0
EMISFACT L0002388     HRDOW 0.0 0.0 0.0 0.0 0.0 0.0
EMISFACT L0002388     HRDOW 0.0 0.0 0.0 0.0 0.0 0.0
EMISFACT L0002388     HRDOW 0.0 0.0 0.0 0.0 0.0 0.0
EMISFACT L0002389     HRDOW 0.0 0.0 0.0 0.0 0.0 0.0
EMISFACT L0002389     HRDOW 0.0 0.0 0.0 0.0 0.0 0.0
EMISFACT L0002389     HRDOW 0.0 0.0 0.0 0.0 0.0 0.0
EMISFACT L0002389     HRDOW 0.0 0.0 0.0 0.0 0.0 0.0
EMISFACT L0002390     HRDOW 0.0 0.0 0.0 0.0 0.0 0.0
EMISFACT L0002390     HRDOW 0.0 0.0 0.0 0.0 0.0 0.0
EMISFACT L0002390     HRDOW 0.0 0.0 0.0 0.0 0.0 0.0
EMISFACT L0002390     HRDOW 0.0 0.0 0.0 0.0 0.0 0.0
EMISFACT L0002391     HRDOW 0.0 0.0 0.0 0.0 0.0 0.0
EMISFACT L0002391     HRDOW 0.0 0.0 0.0 0.0 0.0 0.0
EMISFACT L0002391     HRDOW 0.0 0.0 0.0 0.0 0.0 0.0
EMISFACT L0002391     HRDOW 0.0 0.0 0.0 0.0 0.0 0.0
EMISFACT L0002392     HRDOW 0.0 0.0 0.0 0.0 0.0 0.0
EMISFACT L0002392     HRDOW 0.0 0.0 0.0 0.0 0.0 0.0
EMISFACT L0002392     HRDOW 0.0 0.0 0.0 0.0 0.0 0.0
EMISFACT L0002392     HRDOW 0.0 0.0 0.0 0.0 0.0 0.0
EMISFACT L0002393     HRDOW 0.0 0.0 0.0 0.0 0.0 0.0
EMISFACT L0002393     HRDOW 0.0 0.0 0.0 0.0 0.0 0.0
EMISFACT L0002393     HRDOW 0.0 0.0 0.0 0.0 0.0 0.0
EMISFACT L0002393     HRDOW 0.0 0.0 0.0 0.0 0.0 0.0
EMISFACT L0002394     HRDOW 0.0 0.0 0.0 0.0 0.0 0.0
EMISFACT L0002394     HRDOW 0.0 0.0 0.0 0.0 0.0 0.0
EMISFACT L0002394     HRDOW 0.0 0.0 0.0 0.0 0.0 0.0
EMISFACT L0002394     HRDOW 0.0 0.0 0.0 0.0 0.0 0.0
EMISFACT L0002395     HRDOW 0.0 0.0 0.0 0.0 0.0 0.0
EMISFACT L0002395     HRDOW 0.0 0.0 0.0 0.0 0.0 0.0
EMISFACT L0002395     HRDOW 0.0 0.0 0.0 0.0 0.0 0.0
EMISFACT L0002395     HRDOW 0.0 0.0 0.0 0.0 0.0 0.0
EMISFACT L0002396     HRDOW 0.0 0.0 0.0 0.0 0.0 0.0
EMISFACT L0002396     HRDOW 0.0 0.0 0.0 0.0 0.0 0.0
EMISFACT L0002396     HRDOW 0.0 0.0 0.0 0.0 0.0 0.0
EMISFACT L0002396     HRDOW 0.0 0.0 0.0 0.0 0.0 0.0
EMISFACT L0002397     HRDOW 0.0 0.0 0.0 0.0 0.0 0.0
EMISFACT L0002397     HRDOW 0.0 0.0 0.0 0.0 0.0 0.0
EMISFACT L0002397     HRDOW 0.0 0.0 0.0 0.0 0.0 0.0
```

```
   EMISFACT L0002397     HRDOW 0.0 0.0 0.0 0.0 0.0 0.0
   EMISFACT L0002398     HRDOW 0.0 0.0 0.0 0.0 0.0 0.0
   EMISFACT L0002398     HRDOW 0.0 0.0 0.0 0.0 0.0 0.0
   EMISFACT L0002398     HRDOW 0.0 0.0 0.0 0.0 0.0 0.0
   EMISFACT L0002398     HRDOW 0.0 0.0 0.0 0.0 0.0 0.0
   EMISFACT L0002399     HRDOW 0.0 0.0 0.0 0.0 0.0 0.0
   EMISFACT L0002399     HRDOW 0.0 0.0 0.0 0.0 0.0 0.0
   EMISFACT L0002399     HRDOW 0.0 0.0 0.0 0.0 0.0 0.0
   EMISFACT L0002399     HRDOW 0.0 0.0 0.0 0.0 0.0 0.0
   EMISFACT L0002400     HRDOW 0.0 0.0 0.0 0.0 0.0 0.0
   EMISFACT L0002400     HRDOW 0.0 0.0 0.0 0.0 0.0 0.0
   EMISFACT L0002400     HRDOW 0.0 0.0 0.0 0.0 0.0 0.0
   EMISFACT L0002400     HRDOW 0.0 0.0 0.0 0.0 0.0 0.0
   EMISFACT L0002401     HRDOW 0.0 0.0 0.0 0.0 0.0 0.0
   EMISFACT L0002401     HRDOW 0.0 0.0 0.0 0.0 0.0 0.0
   EMISFACT L0002401     HRDOW 0.0 0.0 0.0 0.0 0.0 0.0
   EMISFACT L0002401     HRDOW 0.0 0.0 0.0 0.0 0.0 0.0
   EMISFACT L0002402     HRDOW 0.0 0.0 0.0 0.0 0.0 0.0
   EMISFACT L0002402     HRDOW 0.0 0.0 0.0 0.0 0.0 0.0
   EMISFACT L0002402     HRDOW 0.0 0.0 0.0 0.0 0.0 0.0
   EMISFACT L0002402     HRDOW 0.0 0.0 0.0 0.0 0.0 0.0
   EMISFACT L0002403     HRDOW 0.0 0.0 0.0 0.0 0.0 0.0
   EMISFACT L0002403     HRDOW 0.0 0.0 0.0 0.0 0.0 0.0
   EMISFACT L0002403     HRDOW 0.0 0.0 0.0 0.0 0.0 0.0
   EMISFACT L0002403     HRDOW 0.0 0.0 0.0 0.0 0.0 0.0
   EMISFACT L0002404     HRDOW 0.0 0.0 0.0 0.0 0.0 0.0
   EMISFACT L0002404     HRDOW 0.0 0.0 0.0 0.0 0.0 0.0
   EMISFACT L0002404     HRDOW 0.0 0.0 0.0 0.0 0.0 0.0
   EMISFACT L0002404     HRDOW 0.0 0.0 0.0 0.0 0.0 0.0
   EMISFACT L0002405     HRDOW 0.0 0.0 0.0 0.0 0.0 0.0
   EMISFACT L0002405     HRDOW 0.0 0.0 0.0 0.0 0.0 0.0
   EMISFACT L0002405     HRDOW 0.0 0.0 0.0 0.0 0.0 0.0
   EMISFACT L0002405     HRDOW 0.0 0.0 0.0 0.0 0.0 0.0
   EMISFACT L0002406     HRDOW 0.0 0.0 0.0 0.0 0.0 0.0
   EMISFACT L0002406     HRDOW 0.0 0.0 0.0 0.0 0.0 0.0
   EMISFACT L0002406     HRDOW 0.0 0.0 0.0 0.0 0.0 0.0
   EMISFACT L0002406     HRDOW 0.0 0.0 0.0 0.0 0.0 0.0
   EMISFACT L0002407     HRDOW 0.0 0.0 0.0 0.0 0.0 0.0
   EMISFACT L0002407     HRDOW 0.0 0.0 0.0 0.0 0.0 0.0
   EMISFACT L0002407     HRDOW 0.0 0.0 0.0 0.0 0.0 0.0
   EMISFACT L0002407     HRDOW 0.0 0.0 0.0 0.0 0.0 0.0
** Sunday:
   EMISFACT L0002339     HRDOW 0.0 0.0 0.0 0.0 0.0 0.0
   EMISFACT L0002339     HRDOW 0.0 0.0 0.0 0.0 0.0 0.0
   EMISFACT L0002339     HRDOW 0.0 0.0 0.0 0.0 0.0 0.0
   EMISFACT L0002339     HRDOW 0.0 0.0 0.0 0.0 0.0 0.0
   EMISFACT L0002340     HRDOW 0.0 0.0 0.0 0.0 0.0 0.0
   EMISFACT L0002340     HRDOW 0.0 0.0 0.0 0.0 0.0 0.0
   EMISFACT L0002340     HRDOW 0.0 0.0 0.0 0.0 0.0 0.0
   EMISFACT L0002340     HRDOW 0.0 0.0 0.0 0.0 0.0 0.0
   EMISFACT L0002341     HRDOW 0.0 0.0 0.0 0.0 0.0 0.0
   EMISFACT L0002341     HRDOW 0.0 0.0 0.0 0.0 0.0 0.0
   EMISFACT L0002341     HRDOW 0.0 0.0 0.0 0.0 0.0 0.0
   EMISFACT L0002341     HRDOW 0.0 0.0 0.0 0.0 0.0 0.0
   EMISFACT L0002342     HRDOW 0.0 0.0 0.0 0.0 0.0 0.0
   EMISFACT L0002342     HRDOW 0.0 0.0 0.0 0.0 0.0 0.0
   EMISFACT L0002342     HRDOW 0.0 0.0 0.0 0.0 0.0 0.0
   EMISFACT L0002342     HRDOW 0.0 0.0 0.0 0.0 0.0 0.0
   EMISFACT L0002343     HRDOW 0.0 0.0 0.0 0.0 0.0 0.0
```

```
EMISFACT L0002343     HRDOW 0.0 0.0 0.0 0.0 0.0 0.0
EMISFACT L0002343     HRDOW 0.0 0.0 0.0 0.0 0.0 0.0
EMISFACT L0002343     HRDOW 0.0 0.0 0.0 0.0 0.0 0.0
EMISFACT L0002344     HRDOW 0.0 0.0 0.0 0.0 0.0 0.0
EMISFACT L0002344     HRDOW 0.0 0.0 0.0 0.0 0.0 0.0
EMISFACT L0002344     HRDOW 0.0 0.0 0.0 0.0 0.0 0.0
EMISFACT L0002344     HRDOW 0.0 0.0 0.0 0.0 0.0 0.0
EMISFACT L0002345     HRDOW 0.0 0.0 0.0 0.0 0.0 0.0
EMISFACT L0002345     HRDOW 0.0 0.0 0.0 0.0 0.0 0.0
EMISFACT L0002345     HRDOW 0.0 0.0 0.0 0.0 0.0 0.0
EMISFACT L0002345     HRDOW 0.0 0.0 0.0 0.0 0.0 0.0
EMISFACT L0002346     HRDOW 0.0 0.0 0.0 0.0 0.0 0.0
EMISFACT L0002346     HRDOW 0.0 0.0 0.0 0.0 0.0 0.0
EMISFACT L0002346     HRDOW 0.0 0.0 0.0 0.0 0.0 0.0
EMISFACT L0002346     HRDOW 0.0 0.0 0.0 0.0 0.0 0.0
EMISFACT L0002347     HRDOW 0.0 0.0 0.0 0.0 0.0 0.0
EMISFACT L0002347     HRDOW 0.0 0.0 0.0 0.0 0.0 0.0
EMISFACT L0002347     HRDOW 0.0 0.0 0.0 0.0 0.0 0.0
EMISFACT L0002347     HRDOW 0.0 0.0 0.0 0.0 0.0 0.0
EMISFACT L0002348     HRDOW 0.0 0.0 0.0 0.0 0.0 0.0
EMISFACT L0002348     HRDOW 0.0 0.0 0.0 0.0 0.0 0.0
EMISFACT L0002348     HRDOW 0.0 0.0 0.0 0.0 0.0 0.0
EMISFACT L0002348     HRDOW 0.0 0.0 0.0 0.0 0.0 0.0
EMISFACT L0002349     HRDOW 0.0 0.0 0.0 0.0 0.0 0.0
EMISFACT L0002349     HRDOW 0.0 0.0 0.0 0.0 0.0 0.0
EMISFACT L0002349     HRDOW 0.0 0.0 0.0 0.0 0.0 0.0
EMISFACT L0002349     HRDOW 0.0 0.0 0.0 0.0 0.0 0.0
EMISFACT L0002350     HRDOW 0.0 0.0 0.0 0.0 0.0 0.0
EMISFACT L0002350     HRDOW 0.0 0.0 0.0 0.0 0.0 0.0
EMISFACT L0002350     HRDOW 0.0 0.0 0.0 0.0 0.0 0.0
EMISFACT L0002350     HRDOW 0.0 0.0 0.0 0.0 0.0 0.0
EMISFACT L0002351     HRDOW 0.0 0.0 0.0 0.0 0.0 0.0
EMISFACT L0002351     HRDOW 0.0 0.0 0.0 0.0 0.0 0.0
EMISFACT L0002351     HRDOW 0.0 0.0 0.0 0.0 0.0 0.0
EMISFACT L0002351     HRDOW 0.0 0.0 0.0 0.0 0.0 0.0
EMISFACT L0002352     HRDOW 0.0 0.0 0.0 0.0 0.0 0.0
EMISFACT L0002352     HRDOW 0.0 0.0 0.0 0.0 0.0 0.0
EMISFACT L0002352     HRDOW 0.0 0.0 0.0 0.0 0.0 0.0
EMISFACT L0002352     HRDOW 0.0 0.0 0.0 0.0 0.0 0.0
EMISFACT L0002353     HRDOW 0.0 0.0 0.0 0.0 0.0 0.0
EMISFACT L0002353     HRDOW 0.0 0.0 0.0 0.0 0.0 0.0
EMISFACT L0002353     HRDOW 0.0 0.0 0.0 0.0 0.0 0.0
EMISFACT L0002353     HRDOW 0.0 0.0 0.0 0.0 0.0 0.0
EMISFACT L0002354     HRDOW 0.0 0.0 0.0 0.0 0.0 0.0
EMISFACT L0002354     HRDOW 0.0 0.0 0.0 0.0 0.0 0.0
EMISFACT L0002354     HRDOW 0.0 0.0 0.0 0.0 0.0 0.0
EMISFACT L0002354     HRDOW 0.0 0.0 0.0 0.0 0.0 0.0
EMISFACT L0002355     HRDOW 0.0 0.0 0.0 0.0 0.0 0.0
EMISFACT L0002355     HRDOW 0.0 0.0 0.0 0.0 0.0 0.0
EMISFACT L0002355     HRDOW 0.0 0.0 0.0 0.0 0.0 0.0
EMISFACT L0002355     HRDOW 0.0 0.0 0.0 0.0 0.0 0.0
EMISFACT L0002356     HRDOW 0.0 0.0 0.0 0.0 0.0 0.0
EMISFACT L0002356     HRDOW 0.0 0.0 0.0 0.0 0.0 0.0
EMISFACT L0002356     HRDOW 0.0 0.0 0.0 0.0 0.0 0.0
EMISFACT L0002356     HRDOW 0.0 0.0 0.0 0.0 0.0 0.0
EMISFACT L0002357     HRDOW 0.0 0.0 0.0 0.0 0.0 0.0
EMISFACT L0002357     HRDOW 0.0 0.0 0.0 0.0 0.0 0.0
EMISFACT L0002357     HRDOW 0.0 0.0 0.0 0.0 0.0 0.0
EMISFACT L0002357     HRDOW 0.0 0.0 0.0 0.0 0.0 0.0
```

```
EMISFACT L0002358     HRDOW 0.0 0.0 0.0 0.0 0.0 0.0
EMISFACT L0002358     HRDOW 0.0 0.0 0.0 0.0 0.0 0.0
EMISFACT L0002358     HRDOW 0.0 0.0 0.0 0.0 0.0 0.0
EMISFACT L0002358     HRDOW 0.0 0.0 0.0 0.0 0.0 0.0
EMISFACT L0002359     HRDOW 0.0 0.0 0.0 0.0 0.0 0.0
EMISFACT L0002359     HRDOW 0.0 0.0 0.0 0.0 0.0 0.0
EMISFACT L0002359     HRDOW 0.0 0.0 0.0 0.0 0.0 0.0
EMISFACT L0002359     HRDOW 0.0 0.0 0.0 0.0 0.0 0.0
EMISFACT L0002360     HRDOW 0.0 0.0 0.0 0.0 0.0 0.0
EMISFACT L0002360     HRDOW 0.0 0.0 0.0 0.0 0.0 0.0
EMISFACT L0002360     HRDOW 0.0 0.0 0.0 0.0 0.0 0.0
EMISFACT L0002360     HRDOW 0.0 0.0 0.0 0.0 0.0 0.0
EMISFACT L0002361     HRDOW 0.0 0.0 0.0 0.0 0.0 0.0
EMISFACT L0002361     HRDOW 0.0 0.0 0.0 0.0 0.0 0.0
EMISFACT L0002361     HRDOW 0.0 0.0 0.0 0.0 0.0 0.0
EMISFACT L0002361     HRDOW 0.0 0.0 0.0 0.0 0.0 0.0
EMISFACT L0002362     HRDOW 0.0 0.0 0.0 0.0 0.0 0.0
EMISFACT L0002362     HRDOW 0.0 0.0 0.0 0.0 0.0 0.0
EMISFACT L0002362     HRDOW 0.0 0.0 0.0 0.0 0.0 0.0
EMISFACT L0002362     HRDOW 0.0 0.0 0.0 0.0 0.0 0.0
EMISFACT L0002363     HRDOW 0.0 0.0 0.0 0.0 0.0 0.0
EMISFACT L0002363     HRDOW 0.0 0.0 0.0 0.0 0.0 0.0
EMISFACT L0002363     HRDOW 0.0 0.0 0.0 0.0 0.0 0.0
EMISFACT L0002363     HRDOW 0.0 0.0 0.0 0.0 0.0 0.0
EMISFACT L0002364     HRDOW 0.0 0.0 0.0 0.0 0.0 0.0
EMISFACT L0002364     HRDOW 0.0 0.0 0.0 0.0 0.0 0.0
EMISFACT L0002364     HRDOW 0.0 0.0 0.0 0.0 0.0 0.0
EMISFACT L0002364     HRDOW 0.0 0.0 0.0 0.0 0.0 0.0
EMISFACT L0002365     HRDOW 0.0 0.0 0.0 0.0 0.0 0.0
EMISFACT L0002365     HRDOW 0.0 0.0 0.0 0.0 0.0 0.0
EMISFACT L0002365     HRDOW 0.0 0.0 0.0 0.0 0.0 0.0
EMISFACT L0002365     HRDOW 0.0 0.0 0.0 0.0 0.0 0.0
EMISFACT L0002366     HRDOW 0.0 0.0 0.0 0.0 0.0 0.0
EMISFACT L0002366     HRDOW 0.0 0.0 0.0 0.0 0.0 0.0
EMISFACT L0002366     HRDOW 0.0 0.0 0.0 0.0 0.0 0.0
EMISFACT L0002366     HRDOW 0.0 0.0 0.0 0.0 0.0 0.0
EMISFACT L0002367     HRDOW 0.0 0.0 0.0 0.0 0.0 0.0
EMISFACT L0002367     HRDOW 0.0 0.0 0.0 0.0 0.0 0.0
EMISFACT L0002367     HRDOW 0.0 0.0 0.0 0.0 0.0 0.0
EMISFACT L0002367     HRDOW 0.0 0.0 0.0 0.0 0.0 0.0
EMISFACT L0002368     HRDOW 0.0 0.0 0.0 0.0 0.0 0.0
EMISFACT L0002368     HRDOW 0.0 0.0 0.0 0.0 0.0 0.0
EMISFACT L0002368     HRDOW 0.0 0.0 0.0 0.0 0.0 0.0
EMISFACT L0002368     HRDOW 0.0 0.0 0.0 0.0 0.0 0.0
EMISFACT L0002369     HRDOW 0.0 0.0 0.0 0.0 0.0 0.0
EMISFACT L0002369     HRDOW 0.0 0.0 0.0 0.0 0.0 0.0
EMISFACT L0002369     HRDOW 0.0 0.0 0.0 0.0 0.0 0.0
EMISFACT L0002369     HRDOW 0.0 0.0 0.0 0.0 0.0 0.0
EMISFACT L0002370     HRDOW 0.0 0.0 0.0 0.0 0.0 0.0
EMISFACT L0002370     HRDOW 0.0 0.0 0.0 0.0 0.0 0.0
EMISFACT L0002370     HRDOW 0.0 0.0 0.0 0.0 0.0 0.0
EMISFACT L0002370     HRDOW 0.0 0.0 0.0 0.0 0.0 0.0
EMISFACT L0002371     HRDOW 0.0 0.0 0.0 0.0 0.0 0.0
EMISFACT L0002371     HRDOW 0.0 0.0 0.0 0.0 0.0 0.0
EMISFACT L0002371     HRDOW 0.0 0.0 0.0 0.0 0.0 0.0
EMISFACT L0002371     HRDOW 0.0 0.0 0.0 0.0 0.0 0.0
EMISFACT L0002372     HRDOW 0.0 0.0 0.0 0.0 0.0 0.0
EMISFACT L0002372     HRDOW 0.0 0.0 0.0 0.0 0.0 0.0
EMISFACT L0002372     HRDOW 0.0 0.0 0.0 0.0 0.0 0.0
```

```
EMISFACT L0002372     HRDOW 0.0 0.0 0.0 0.0 0.0 0.0
EMISFACT L0002373     HRDOW 0.0 0.0 0.0 0.0 0.0 0.0
EMISFACT L0002373     HRDOW 0.0 0.0 0.0 0.0 0.0 0.0
EMISFACT L0002373     HRDOW 0.0 0.0 0.0 0.0 0.0 0.0
EMISFACT L0002373     HRDOW 0.0 0.0 0.0 0.0 0.0 0.0
EMISFACT L0002374     HRDOW 0.0 0.0 0.0 0.0 0.0 0.0
EMISFACT L0002374     HRDOW 0.0 0.0 0.0 0.0 0.0 0.0
EMISFACT L0002374     HRDOW 0.0 0.0 0.0 0.0 0.0 0.0
EMISFACT L0002374     HRDOW 0.0 0.0 0.0 0.0 0.0 0.0
EMISFACT L0002375     HRDOW 0.0 0.0 0.0 0.0 0.0 0.0
EMISFACT L0002375     HRDOW 0.0 0.0 0.0 0.0 0.0 0.0
EMISFACT L0002375     HRDOW 0.0 0.0 0.0 0.0 0.0 0.0
EMISFACT L0002375     HRDOW 0.0 0.0 0.0 0.0 0.0 0.0
EMISFACT L0002376     HRDOW 0.0 0.0 0.0 0.0 0.0 0.0
EMISFACT L0002376     HRDOW 0.0 0.0 0.0 0.0 0.0 0.0
EMISFACT L0002376     HRDOW 0.0 0.0 0.0 0.0 0.0 0.0
EMISFACT L0002376     HRDOW 0.0 0.0 0.0 0.0 0.0 0.0
EMISFACT L0002377     HRDOW 0.0 0.0 0.0 0.0 0.0 0.0
EMISFACT L0002377     HRDOW 0.0 0.0 0.0 0.0 0.0 0.0
EMISFACT L0002377     HRDOW 0.0 0.0 0.0 0.0 0.0 0.0
EMISFACT L0002377     HRDOW 0.0 0.0 0.0 0.0 0.0 0.0
EMISFACT L0002378     HRDOW 0.0 0.0 0.0 0.0 0.0 0.0
EMISFACT L0002378     HRDOW 0.0 0.0 0.0 0.0 0.0 0.0
EMISFACT L0002378     HRDOW 0.0 0.0 0.0 0.0 0.0 0.0
EMISFACT L0002378     HRDOW 0.0 0.0 0.0 0.0 0.0 0.0
EMISFACT L0002379     HRDOW 0.0 0.0 0.0 0.0 0.0 0.0
EMISFACT L0002379     HRDOW 0.0 0.0 0.0 0.0 0.0 0.0
EMISFACT L0002379     HRDOW 0.0 0.0 0.0 0.0 0.0 0.0
EMISFACT L0002379     HRDOW 0.0 0.0 0.0 0.0 0.0 0.0
EMISFACT L0002380     HRDOW 0.0 0.0 0.0 0.0 0.0 0.0
EMISFACT L0002380     HRDOW 0.0 0.0 0.0 0.0 0.0 0.0
EMISFACT L0002380     HRDOW 0.0 0.0 0.0 0.0 0.0 0.0
EMISFACT L0002380     HRDOW 0.0 0.0 0.0 0.0 0.0 0.0
EMISFACT L0002381     HRDOW 0.0 0.0 0.0 0.0 0.0 0.0
EMISFACT L0002381     HRDOW 0.0 0.0 0.0 0.0 0.0 0.0
EMISFACT L0002381     HRDOW 0.0 0.0 0.0 0.0 0.0 0.0
EMISFACT L0002381     HRDOW 0.0 0.0 0.0 0.0 0.0 0.0
EMISFACT L0002382     HRDOW 0.0 0.0 0.0 0.0 0.0 0.0
EMISFACT L0002382     HRDOW 0.0 0.0 0.0 0.0 0.0 0.0
EMISFACT L0002382     HRDOW 0.0 0.0 0.0 0.0 0.0 0.0
EMISFACT L0002382     HRDOW 0.0 0.0 0.0 0.0 0.0 0.0
EMISFACT L0002383     HRDOW 0.0 0.0 0.0 0.0 0.0 0.0
EMISFACT L0002383     HRDOW 0.0 0.0 0.0 0.0 0.0 0.0
EMISFACT L0002383     HRDOW 0.0 0.0 0.0 0.0 0.0 0.0
EMISFACT L0002383     HRDOW 0.0 0.0 0.0 0.0 0.0 0.0
EMISFACT L0002384     HRDOW 0.0 0.0 0.0 0.0 0.0 0.0
EMISFACT L0002384     HRDOW 0.0 0.0 0.0 0.0 0.0 0.0
EMISFACT L0002384     HRDOW 0.0 0.0 0.0 0.0 0.0 0.0
EMISFACT L0002384     HRDOW 0.0 0.0 0.0 0.0 0.0 0.0
EMISFACT L0002385     HRDOW 0.0 0.0 0.0 0.0 0.0 0.0
EMISFACT L0002385     HRDOW 0.0 0.0 0.0 0.0 0.0 0.0
EMISFACT L0002385     HRDOW 0.0 0.0 0.0 0.0 0.0 0.0
EMISFACT L0002385     HRDOW 0.0 0.0 0.0 0.0 0.0 0.0
EMISFACT L0002386     HRDOW 0.0 0.0 0.0 0.0 0.0 0.0
EMISFACT L0002386     HRDOW 0.0 0.0 0.0 0.0 0.0 0.0
EMISFACT L0002386     HRDOW 0.0 0.0 0.0 0.0 0.0 0.0
EMISFACT L0002386     HRDOW 0.0 0.0 0.0 0.0 0.0 0.0
EMISFACT L0002387     HRDOW 0.0 0.0 0.0 0.0 0.0 0.0
EMISFACT L0002387     HRDOW 0.0 0.0 0.0 0.0 0.0 0.0
```

```
EMISFACT L0002387     HRDOW 0.0 0.0 0.0 0.0 0.0 0.0
EMISFACT L0002387     HRDOW 0.0 0.0 0.0 0.0 0.0 0.0
EMISFACT L0002388     HRDOW 0.0 0.0 0.0 0.0 0.0 0.0
EMISFACT L0002388     HRDOW 0.0 0.0 0.0 0.0 0.0 0.0
EMISFACT L0002388     HRDOW 0.0 0.0 0.0 0.0 0.0 0.0
EMISFACT L0002388     HRDOW 0.0 0.0 0.0 0.0 0.0 0.0
EMISFACT L0002389     HRDOW 0.0 0.0 0.0 0.0 0.0 0.0
EMISFACT L0002389     HRDOW 0.0 0.0 0.0 0.0 0.0 0.0
EMISFACT L0002389     HRDOW 0.0 0.0 0.0 0.0 0.0 0.0
EMISFACT L0002389     HRDOW 0.0 0.0 0.0 0.0 0.0 0.0
EMISFACT L0002390     HRDOW 0.0 0.0 0.0 0.0 0.0 0.0
EMISFACT L0002390     HRDOW 0.0 0.0 0.0 0.0 0.0 0.0
EMISFACT L0002390     HRDOW 0.0 0.0 0.0 0.0 0.0 0.0
EMISFACT L0002390     HRDOW 0.0 0.0 0.0 0.0 0.0 0.0
EMISFACT L0002391     HRDOW 0.0 0.0 0.0 0.0 0.0 0.0
EMISFACT L0002391     HRDOW 0.0 0.0 0.0 0.0 0.0 0.0
EMISFACT L0002391     HRDOW 0.0 0.0 0.0 0.0 0.0 0.0
EMISFACT L0002391     HRDOW 0.0 0.0 0.0 0.0 0.0 0.0
EMISFACT L0002392     HRDOW 0.0 0.0 0.0 0.0 0.0 0.0
EMISFACT L0002392     HRDOW 0.0 0.0 0.0 0.0 0.0 0.0
EMISFACT L0002392     HRDOW 0.0 0.0 0.0 0.0 0.0 0.0
EMISFACT L0002392     HRDOW 0.0 0.0 0.0 0.0 0.0 0.0
EMISFACT L0002393     HRDOW 0.0 0.0 0.0 0.0 0.0 0.0
EMISFACT L0002393     HRDOW 0.0 0.0 0.0 0.0 0.0 0.0
EMISFACT L0002393     HRDOW 0.0 0.0 0.0 0.0 0.0 0.0
EMISFACT L0002393     HRDOW 0.0 0.0 0.0 0.0 0.0 0.0
EMISFACT L0002394     HRDOW 0.0 0.0 0.0 0.0 0.0 0.0
EMISFACT L0002394     HRDOW 0.0 0.0 0.0 0.0 0.0 0.0
EMISFACT L0002394     HRDOW 0.0 0.0 0.0 0.0 0.0 0.0
EMISFACT L0002394     HRDOW 0.0 0.0 0.0 0.0 0.0 0.0
EMISFACT L0002395     HRDOW 0.0 0.0 0.0 0.0 0.0 0.0
EMISFACT L0002395     HRDOW 0.0 0.0 0.0 0.0 0.0 0.0
EMISFACT L0002395     HRDOW 0.0 0.0 0.0 0.0 0.0 0.0
EMISFACT L0002395     HRDOW 0.0 0.0 0.0 0.0 0.0 0.0
EMISFACT L0002396     HRDOW 0.0 0.0 0.0 0.0 0.0 0.0
EMISFACT L0002396     HRDOW 0.0 0.0 0.0 0.0 0.0 0.0
EMISFACT L0002396     HRDOW 0.0 0.0 0.0 0.0 0.0 0.0
EMISFACT L0002396     HRDOW 0.0 0.0 0.0 0.0 0.0 0.0
EMISFACT L0002397     HRDOW 0.0 0.0 0.0 0.0 0.0 0.0
EMISFACT L0002397     HRDOW 0.0 0.0 0.0 0.0 0.0 0.0
EMISFACT L0002397     HRDOW 0.0 0.0 0.0 0.0 0.0 0.0
EMISFACT L0002397     HRDOW 0.0 0.0 0.0 0.0 0.0 0.0
EMISFACT L0002398     HRDOW 0.0 0.0 0.0 0.0 0.0 0.0
EMISFACT L0002398     HRDOW 0.0 0.0 0.0 0.0 0.0 0.0
EMISFACT L0002398     HRDOW 0.0 0.0 0.0 0.0 0.0 0.0
EMISFACT L0002398     HRDOW 0.0 0.0 0.0 0.0 0.0 0.0
EMISFACT L0002399     HRDOW 0.0 0.0 0.0 0.0 0.0 0.0
EMISFACT L0002399     HRDOW 0.0 0.0 0.0 0.0 0.0 0.0
EMISFACT L0002399     HRDOW 0.0 0.0 0.0 0.0 0.0 0.0
EMISFACT L0002399     HRDOW 0.0 0.0 0.0 0.0 0.0 0.0
EMISFACT L0002400     HRDOW 0.0 0.0 0.0 0.0 0.0 0.0
EMISFACT L0002400     HRDOW 0.0 0.0 0.0 0.0 0.0 0.0
EMISFACT L0002400     HRDOW 0.0 0.0 0.0 0.0 0.0 0.0
EMISFACT L0002400     HRDOW 0.0 0.0 0.0 0.0 0.0 0.0
EMISFACT L0002401     HRDOW 0.0 0.0 0.0 0.0 0.0 0.0
EMISFACT L0002401     HRDOW 0.0 0.0 0.0 0.0 0.0 0.0
EMISFACT L0002401     HRDOW 0.0 0.0 0.0 0.0 0.0 0.0
EMISFACT L0002401     HRDOW 0.0 0.0 0.0 0.0 0.0 0.0
EMISFACT L0002402     HRDOW 0.0 0.0 0.0 0.0 0.0 0.0
```

```
EMISFACT L0002402     HRDOW 0.0 0.0 0.0 0.0 0.0 0.0
EMISFACT L0002402     HRDOW 0.0 0.0 0.0 0.0 0.0 0.0
EMISFACT L0002402     HRDOW 0.0 0.0 0.0 0.0 0.0 0.0
EMISFACT L0002403     HRDOW 0.0 0.0 0.0 0.0 0.0 0.0
EMISFACT L0002403     HRDOW 0.0 0.0 0.0 0.0 0.0 0.0
EMISFACT L0002403     HRDOW 0.0 0.0 0.0 0.0 0.0 0.0
EMISFACT L0002403     HRDOW 0.0 0.0 0.0 0.0 0.0 0.0
EMISFACT L0002404     HRDOW 0.0 0.0 0.0 0.0 0.0 0.0
EMISFACT L0002404     HRDOW 0.0 0.0 0.0 0.0 0.0 0.0
EMISFACT L0002404     HRDOW 0.0 0.0 0.0 0.0 0.0 0.0
EMISFACT L0002404     HRDOW 0.0 0.0 0.0 0.0 0.0 0.0
EMISFACT L0002405     HRDOW 0.0 0.0 0.0 0.0 0.0 0.0
EMISFACT L0002405     HRDOW 0.0 0.0 0.0 0.0 0.0 0.0
EMISFACT L0002405     HRDOW 0.0 0.0 0.0 0.0 0.0 0.0
EMISFACT L0002405     HRDOW 0.0 0.0 0.0 0.0 0.0 0.0
EMISFACT L0002406     HRDOW 0.0 0.0 0.0 0.0 0.0 0.0
EMISFACT L0002406     HRDOW 0.0 0.0 0.0 0.0 0.0 0.0
EMISFACT L0002406     HRDOW 0.0 0.0 0.0 0.0 0.0 0.0
EMISFACT L0002406     HRDOW 0.0 0.0 0.0 0.0 0.0 0.0
EMISFACT L0002407     HRDOW 0.0 0.0 0.0 0.0 0.0 0.0
EMISFACT L0002407     HRDOW 0.0 0.0 0.0 0.0 0.0 0.0
EMISFACT L0002407     HRDOW 0.0 0.0 0.0 0.0 0.0 0.0
EMISFACT L0002407     HRDOW 0.0 0.0 0.0 0.0 0.0 0.0
SRCGROUP ABWQL    ABWQL
SRCGROUP EG       EG
SRCGROUP FES      FES
SRCGROUP IO       L0001843 L0001844
SRCGROUP JS       JS
SRCGROUP MISC1    L0001845 L0001846 L0001847 L0001848 L0001849 L0001850
SRCGROUP MISC1    L0001851 L0001852 L0001853 L0001854 L0001855 L0001856
SRCGROUP MISC1    L0001857 L0001858 L0001859 L0001860 L0001861 L0001862
SRCGROUP MISC1    L0001863 L0001864 L0001865 L0001866 L0001867 L0001868
SRCGROUP MISC1    L0001869
SRCGROUP MISC2    L0001870 L0001871 L0001872 L0001873 L0001874 L0001875
SRCGROUP MISC2    L0001876 L0001877 L0001878 L0001879 L0001880 L0001881
SRCGROUP MISC2    L0001882 L0001883 L0001884 L0001885 L0001886 L0001887
SRCGROUP MISC2    L0001888 L0001889 L0001890 L0001891 L0001892 L0001893
SRCGROUP MISC2    L0001894 L0001895 L0001896 L0001897 L0001898 L0001899
SRCGROUP MISC2    L0001900 L0001901 L0001902 L0001903 L0001904 L0001905
SRCGROUP MISC2    L0001906 L0001907 L0001908 L0001909 L0001910 L0001911
SRCGROUP MISC2    L0001912 L0001913 L0001914 L0001915 L0001916 L0001917
SRCGROUP MISC2    L0001918 L0001919 L0001920 L0001921 L0001922 L0001923
SRCGROUP MISC2    L0001924 L0001925 L0001926 L0001927 L0001928 L0001929
SRCGROUP MISC2    L0001930 L0001931 L0001932 L0001933 L0001934 L0001935
SRCGROUP MISC2    L0001936 L0001937 L0001938 L0001939 L0001940 L0001941
SRCGROUP MISC2    L0001942 L0001943 L0001944 L0001945 L0001946 L0001947
SRCGROUP MISC2    L0001948 L0001949 L0001950 L0001951 L0001952 L0001953
SRCGROUP MISC2    L0001954 L0001955 L0001956 L0001957
SRCGROUP MISC3    L0001958 L0001959 L0001960 L0001961 L0001962 L0001963
SRCGROUP MISC3    L0001964 L0001965 L0001966 L0001967 L0001968 L0001969
SRCGROUP MISC3    L0001970 L0001971 L0001972 L0001973 L0001974 L0001975
SRCGROUP MISC3    L0001976 L0001977 L0001978 L0001979 L0001980 L0001981
SRCGROUP MISC3    L0001982 L0001983 L0001984 L0001985 L0001986 L0001987
SRCGROUP MISC3    L0001988 L0001989 L0001990 L0001991 L0001992 L0001993
SRCGROUP MISC3    L0001994 L0001995 L0001996 L0001997 L0001998 L0001999
SRCGROUP MISC3    L0002000 L0002001 L0002002 L0002003 L0002004 L0002005
SRCGROUP MISC3    L0002006 L0002007 L0002008 L0002009 L0002010 L0002011
SRCGROUP MISC3    L0002012 L0002013 L0002014 L0002015 L0002016
SRCGROUP MISC4    L0002017 L0002018 L0002019 L0002020 L0002021 L0002022
```

```
   SRCGROUP MISC4    L0002023 L0002024 L0002025 L0002026 L0002027 L0002028
   SRCGROUP MISC4    L0002029 L0002030 L0002031 L0002032 L0002033 L0002034
   SRCGROUP MISC4    L0002035 L0002036 L0002037 L0002038 L0002039 L0002040
   SRCGROUP MISC4    L0002041
   SRCGROUP MISC5    L0002042 L0002043 L0002044 L0002045 L0002046 L0002047
   SRCGROUP MISC5    L0002048 L0002049 L0002050 L0002051 L0002052 L0002053
   SRCGROUP MISC5    L0002054 L0002055
   SRCGROUP MISC6    L0002069 L0002070 L0002071 L0002072 L0002073 L0002074
   SRCGROUP MISC6    L0002075 L0002076 L0002077 L0002078 L0002079 L0002080
   SRCGROUP MISC6    L0002081 L0002082 L0002083 L0002084 L0002085 L0002086
   SRCGROUP MISC7    L0002056 L0002057 L0002058 L0002059 L0002060 L0002061
   SRCGROUP MISC7    L0002062 L0002063 L0002064 L0002065 L0002066 L0002067
   SRCGROUP MISC7    L0002068
   SRCGROUP PS       PS
   SRCGROUP RESIV    L0001804 L0001805 L0001806 L0001807 L0001808 L0001809
   SRCGROUP RESIV    L0001810 L0001811 L0001812 L0001813 L0001814 L0001815
   SRCGROUP RESIV    L0001816 L0001817 L0001818 L0001819 L0001820 L0001821
   SRCGROUP RESIV    L0001822 L0001823 L0001824 L0001825 L0001826 L0001827
   SRCGROUP RESIV    L0001828 L0001829 L0001830 L0001831 L0001832 L0001833
   SRCGROUP RESIV    L0001834 L0001835 L0001836 L0001837 L0001838 L0001839
   SRCGROUP RESIV    L0001840 L0001841 L0001842
   SRCGROUP STT      STT
   SRCGROUP HAUL1    L0003711 L0003712 L0003713 L0003714 L0003715 L0003716
   SRCGROUP HAUL1    L0003717 L0003718 L0003719 L0003720 L0003721 L0003722
   SRCGROUP HAUL1    L0003723 L0003724 L0003725 L0003726 L0003727 L0003728
   SRCGROUP HAUL1    L0003729 L0003730 L0003731 L0003732 L0003733 L0003734
   SRCGROUP HAUL1    L0003735 L0003736 L0003737 L0003738 L0003739 L0003740
   SRCGROUP HAUL1    L0003741 L0003742 L0003743 L0003744 L0003745 L0003746
   SRCGROUP HAUL1    L0003747 L0003748 L0003749 L0003750 L0003751 L0003752
   SRCGROUP HAUL1    L0003753 L0003754 L0003755 L0003756 L0003757 L0003758
   SRCGROUP HAUL1    L0003759 L0003760 L0003761 L0003762 L0003763 L0003764
   SRCGROUP HAUL1    L0003765 L0003766 L0003767 L0003768
   SRCGROUP HAUL2    L0002339 L0002340 L0002341 L0002342 L0002343 L0002344
   SRCGROUP HAUL2    L0002345 L0002346 L0002347 L0002348 L0002349 L0002350
   SRCGROUP HAUL2    L0002351 L0002352 L0002353 L0002354 L0002355 L0002356
   SRCGROUP HAUL2    L0002357 L0002358 L0002359 L0002360 L0002361 L0002362
   SRCGROUP HAUL2    L0002363 L0002364 L0002365 L0002366 L0002367 L0002368
   SRCGROUP HAUL2    L0002369 L0002370 L0002371 L0002372 L0002373 L0002374
   SRCGROUP HAUL2    L0002375 L0002376 L0002377 L0002378 L0002379 L0002380
   SRCGROUP HAUL2    L0002381 L0002382 L0002383 L0002384 L0002385 L0002386
   SRCGROUP HAUL2    L0002387 L0002388 L0002389 L0002390 L0002391 L0002392
   SRCGROUP HAUL2    L0002393 L0002394 L0002395 L0002396 L0002397 L0002398
   SRCGROUP HAUL2    L0002399 L0002400 L0002401 L0002402 L0002403 L0002404
   SRCGROUP HAUL2    L0002405 L0002406 L0002407
   SRCGROUP ALL
SO FINISHED
**
****************************************
** AERMOD Receptor Pathway
****************************************
**
**
RE STARTING
   INCLUDED Garvey.rou
RE FINISHED
**
****************************************
** AERMOD Meteorology Pathway
****************************************
```

```
**
**
ME STARTING
   SURFFILE PicoRiveraADJU\PICO_V9_ADJU\PICO_v9.SFC
   PROFFILE PicoRiveraADJU\PICO_V9_ADJU\PICO_v9.PFL
   SURFDATA 3166 2010 SCAQMD_Pico_Rivera
   UAIRDATA 3190 2010
   SITEDATA 99999 2010
   PROFBASE 58.0 METERS
ME FINISHED
**
****************************************
** AERMOD Output Pathway
****************************************
**
**
OU STARTING
** Auto-Generated Plotfiles
   PLOTFILE PERIOD ALL Garvey.AD\PE00GALL.PLT 31
   PLOTFILE PERIOD ABWQL Garvey.AD\PE00G001.PLT 32
   PLOTFILE PERIOD EG Garvey.AD\PE00G002.PLT 33
   PLOTFILE PERIOD FES Garvey.AD\PE00G003.PLT 34
   PLOTFILE PERIOD IO Garvey.AD\PE00G004.PLT 35
   PLOTFILE PERIOD JS Garvey.AD\PE00G005.PLT 36
   PLOTFILE PERIOD MISC1 Garvey.AD\PE00G006.PLT 37
   PLOTFILE PERIOD MISC2 Garvey.AD\PE00G007.PLT 38
   PLOTFILE PERIOD MISC3 Garvey.AD\PE00G008.PLT 39
   PLOTFILE PERIOD MISC4 Garvey.AD\PE00G009.PLT 40
   PLOTFILE PERIOD MISC5 Garvey.AD\PE00G010.PLT 41
   PLOTFILE PERIOD MISC6 Garvey.AD\PE00G011.PLT 42
   PLOTFILE PERIOD MISC7 Garvey.AD\PE00G012.PLT 43
   PLOTFILE PERIOD PS Garvey.AD\PE00G013.PLT 44
   PLOTFILE PERIOD RESIV Garvey.AD\PE00G014.PLT 45
   PLOTFILE PERIOD STT Garvey.AD\PE00G015.PLT 46
   PLOTFILE PERIOD HAUL1 Garvey.AD\PE00G016.PLT 47
   PLOTFILE PERIOD HAUL2 Garvey.AD\PE00G017.PLT 48
   SUMMFILE Garvey.sum
OU FINISHED


  *** Message Summary For AERMOD Model Setup ***

  --------- Summary of Total Messages --------

 A Total of            0 Fatal Error Message(s)
 A Total of            2 Warning Message(s)
 A Total of            0 Informational Message(s)


    ******** FATAL ERROR MESSAGES ********
               ***  NONE  ***


    ********   WARNING MESSAGES   ********
 ME W186    6381       MEOPEN: THRESH_1MIN 1-min ASOS wind speed threshold used
0.50
 ME W187    6381       MEOPEN: ADJ_U* Option for Stable Low Winds used in AERMET

 ***********************************
```

```
*** SETUP Finishes Successfully ***
***********************************
```

```
 *** AERMOD - VERSION 22112  ***   *** C:\Lakes\Project Files\Garvey\Garvey.isc
***        03/04/24
 *** AERMET - VERSION  16216 ***   ***
***        13:00:54

PAGE   1
 *** MODELOPTs:    RegDFAULT  CONC  ELEV  URBAN  ADJ_U*

                                          ***     MODEL SETUP OPTIONS SUMMARY
***
 - - - - - - - - - - - - - - - - - - - - - - - - - - - - - - - - - - - - - - - -
- - - - - - - - - - - - - - - - - - - - - - -

 ** Model Options Selected:
      * Model Uses Regulatory DEFAULT Options
      * Model Is Setup For Calculation of Average CONCentration Values.
      * NO GAS DEPOSITION Data Provided.
      * NO PARTICLE DEPOSITION Data Provided.
      * Model Uses NO DRY DEPLETION. DDPLETE  =  F
      * Model Uses NO WET DEPLETION. WETDPLT  =  F
      * Stack-tip Downwash.
      * Model Accounts for ELEVated Terrain Effects.
      * Use Calms Processing Routine.
      * Use Missing Data Processing Routine.
      * No Exponential Decay.
      * Model Uses URBAN Dispersion Algorithm for the SBL for   416 Source(s),
        for Total of    1 Urban Area(s):
   Urban Population =   9818605.0 ;  Urban Roughness Length =  1.000 m
      * Urban Roughness Length of 1.0 Meter Used.
      * ADJ_U*   - Use ADJ_U* option for SBL in AERMET
      * TEMP_Sub - Meteorological data includes TEMP substitutions
      * Model Assumes No FLAGPOLE Receptor Heights.
      * The User Specified a Pollutant Type of: PM_10

 **Model Calculates PERIOD Averages Only

 **This Run Includes:    416 Source(s);      18 Source Group(s); and     468
Receptor(s)

               with:      0 POINT(s), including
                          0 POINTCAP(s) and      0 POINTHOR(s)
                and:    416 VOLUME source(s)
                and:      0 AREA type source(s)
                and:      0 LINE source(s)
                and:      0 RLINE/RLINEXT source(s)
                and:      0 OPENPIT source(s)
                and:      0 BUOYANT LINE source(s) with a total of     0 line(s)
                and:      0 SWPOINT source(s)


 **Model Set To Continue RUNning After the Setup Testing.

 **The AERMET Input Meteorological Data Version Date:  16216

 **Output Options Selected:
         Model Outputs Tables of PERIOD Averages by Receptor
         Model Outputs External File(s) of High Values for Plotting (PLOTFILE
Keyword)
         Model Outputs Separate Summary File of High Ranked Values (SUMMFILE
```

```
Keyword)

 **NOTE:  The Following Flags May Appear Following CONC Values:  c for Calm Hours
                                                                 m for Missing
Hours
                                                                 b for Both Calm
and Missing Hours

 **Misc. Inputs:  Base Elev. for Pot. Temp. Profile (m MSL) =    58.00 ;  Decay
Coef. =    0.000     ;  Rot. Angle =     0.0
                  Emission Units = GRAMS/SEC                                ;
Emission Rate Unit Factor =   0.10000E+07
                  Output Units   = MICROGRAMS/M**3

 **Approximate Storage Requirements of Model =      4.2 MB of RAM.

 **Input Runstream File:          aermod.inp
 **Output Print File:             aermod.out

 **Detailed Error/Message File:   Garvey.err
 **File for Summary of Results:   Garvey.sum
```

*** MODELOPTs: RegDFAULT CONC ELEV URBAN ADJ_U*

*** VOLUME SOURCE DATA ***

SOURCE ID	NUMBER PART. CATS.	EMISSION RATE (GRAMS/SEC)	X (METERS)	Y (METERS)	BASE ELEV. (METERS)	RELEASE HEIGHT (METERS)	INIT. SY (METERS)	INIT. SZ (METERS)	URBAN SOURCE BY	EMISSION RATE SCALAR VARY
L0001804	0	0.25641E-01	396719.7	3768370.1	175.3	3.66	18.60	3.40	YES	HRDOW
L0001805	0	0.25641E-01	396701.5	3768334.5	174.2	3.66	18.60	3.40	YES	HRDOW
L0001806	0	0.25641E-01	396690.9	3768295.9	174.8	3.66	18.60	3.40	YES	HRDOW
L0001807	0	0.25641E-01	396695.1	3768257.7	174.7	3.66	18.60	3.40	YES	HRDOW
L0001808	0	0.25641E-01	396709.8	3768220.8	175.1	3.66	18.60	3.40	YES	HRDOW
L0001809	0	0.25641E-01	396732.7	3768188.0	175.0	3.66	18.60	3.40	YES	HRDOW
L0001810	0	0.25641E-01	396755.5	3768155.2	174.8	3.66	18.60	3.40	YES	HRDOW
L0001811	0	0.25641E-01	396778.3	3768122.3	174.5	3.66	18.60	3.40	YES	HRDOW
L0001812	0	0.25641E-01	396799.6	3768088.4	174.9	3.66	18.60	3.40	YES	HRDOW
L0001813	0	0.25641E-01	396820.2	3768054.2	176.8	3.66	18.60	3.40	YES	HRDOW
L0001814	0	0.25641E-01	396858.3	3768041.9	173.5	3.66	18.60	3.40	YES	HRDOW
L0001815	0	0.25641E-01	396896.3	3768029.5	174.4	3.66	18.60	3.40	YES	HRDOW
L0001816	0	0.25641E-01	396935.8	3768025.8	175.3	3.66	18.60	3.40	YES	HRDOW
L0001817	0	0.25641E-01	396975.8	3768025.3	175.3	3.66	18.60	3.40	YES	HRDOW
L0001818	0	0.25641E-01	397015.8	3768024.8	175.3	3.66	18.60	3.40	YES	HRDOW
L0001819	0	0.25641E-01	397055.8	3768024.6	175.3	3.66	18.60	3.40	YES	HRDOW
L0001820	0	0.25641E-01	397095.8	3768024.6	176.1	3.66	18.60	3.40	YES	HRDOW
L0001821	0	0.25641E-01	397135.8	3768024.9	174.9	3.66	18.60	3.40	YES	HRDOW
L0001822	0	0.25641E-01	397175.4	3768030.3	175.3	3.66	18.60	3.40	YES	HRDOW
L0001823	0	0.25641E-01	397208.8	3768050.7	174.8	3.66	18.60			

```
3.40     YES   HRDOW
 L0001824         0   0.25641E-01  397235.7 3768079.1   174.5     3.66    18.60
3.40     YES   HRDOW
 L0001825         0   0.25641E-01  397253.7 3768114.8   174.9     3.66    18.60
3.40     YES   HRDOW
 L0001826         0   0.25641E-01  397257.4 3768153.0   174.6     3.66    18.60
3.40     YES   HRDOW
 L0001827         0   0.25641E-01  397250.2 3768192.0   174.8     3.66    18.60
3.40     YES   HRDOW
 L0001828         0   0.25641E-01  397232.7 3768228.0   175.6     3.66    18.60
3.40     YES   HRDOW
 L0001829         0   0.25641E-01  397202.3 3768251.4   174.8     3.66    18.60
3.40     YES   HRDOW
 L0001830         0   0.25641E-01  397166.8 3768269.7   175.0     3.66    18.60
3.40     YES   HRDOW
 L0001831         0   0.25641E-01  397130.3 3768286.1   175.2     3.66    18.60
3.40     YES   HRDOW
 L0001832         0   0.25641E-01  397093.8 3768302.6   175.3     3.66    18.60
3.40     YES   HRDOW
 L0001833         0   0.25641E-01  397057.4 3768319.0   175.3     3.66    18.60
3.40     YES   HRDOW
 L0001834         0   0.25641E-01  397020.9 3768335.4   175.5     3.66    18.60
3.40     YES   HRDOW
 L0001835         0   0.25641E-01  396984.4 3768351.8   175.5     3.66    18.60
3.40     YES   HRDOW
 L0001836         0   0.25641E-01  396947.9 3768368.1   175.8     3.66    18.60
3.40     YES   HRDOW
 L0001837         0   0.25641E-01  396910.7 3768382.8   175.2     3.66    18.60
3.40     YES   HRDOW
 L0001838         0   0.25641E-01  396873.3 3768397.1   174.7     3.66    18.60
3.40     YES   HRDOW
 L0001839         0   0.25641E-01  396835.2 3768408.7   174.3     3.66    18.60
3.40     YES   HRDOW
 L0001840         0   0.25641E-01  396796.3 3768414.3   175.7     3.66    18.60
3.40     YES   HRDOW
 L0001841         0   0.25641E-01  396759.1 3768399.7   174.9     3.66    18.60
3.40     YES   HRDOW
 L0001842         0   0.25641E-01  396724.8 3768379.2   175.9     3.66    18.60
3.40     YES   HRDOW
 L0001843         0   0.50000E+00  397214.9 3768151.4   162.8     3.66    18.60
3.40     YES   HRDOW
```

*** MODELOPTs: RegDFAULT CONC ELEV URBAN ADJ_U*

*** VOLUME SOURCE DATA ***

SOURCE ID	NUMBER PART. CATS.	EMISSION RATE (GRAMS/SEC)	X (METERS)	Y (METERS)	BASE ELEV. (METERS)	RELEASE HEIGHT (METERS)	INIT. SY (METERS)	INIT. SZ (METERS)	URBAN SOURCE	EMISSION RATE SCALAR VARY BY
L0001844	0	0.50000E+00	397254.9	3768151.0	173.7	3.66	18.60	3.40	YES	HRDOW
JS	0	0.10000E+01	397390.6	3768119.2	156.1	3.66	3.46	3.40	YES	HRDOW
FES	0	0.10000E+01	397357.1	3768117.1	155.6	3.66	4.54	3.40	YES	HRDOW
EG	0	0.10000E+01	397340.9	3768107.1	157.7	3.66	3.46	3.40	YES	HRDOW
STT	0	0.10000E+01	397148.7	3768007.3	177.7	3.66	1.45	3.40	YES	HRDOW
ABWQL	0	0.10000E+01	397366.4	3768104.5	155.7	3.66	5.43	3.40	YES	HRDOW
PS	0	0.10000E+01	397406.6	3768080.6	162.8	3.66	2.91	3.40	YES	HRDOW
L0001845	0	0.40000E-01	397354.4	3768192.8	154.3	3.66	9.30	3.40	YES	HRDOW
L0001846	0	0.40000E-01	397354.0	3768172.8	155.3	3.66	9.30	3.40	YES	HRDOW
L0001847	0	0.40000E-01	397346.6	3768154.3	156.7	3.66	9.30	3.40	YES	HRDOW
L0001848	0	0.40000E-01	397338.1	3768136.2	158.8	3.66	9.30	3.40	YES	HRDOW
L0001849	0	0.40000E-01	397328.1	3768118.9	160.9	3.66	9.30	3.40	YES	HRDOW
L0001850	0	0.40000E-01	397317.2	3768102.2	163.4	3.66	9.30	3.40	YES	HRDOW
L0001851	0	0.40000E-01	397303.8	3768087.4	165.6	3.66	9.30	3.40	YES	HRDOW
L0001852	0	0.40000E-01	397290.5	3768072.5	167.9	3.66	9.30	3.40	YES	HRDOW
L0001853	0	0.40000E-01	397274.4	3768060.7	170.0	3.66	9.30	3.40	YES	HRDOW
L0001854	0	0.40000E-01	397257.9	3768049.4	172.1	3.66	9.30	3.40	YES	HRDOW
L0001855	0	0.40000E-01	397240.9	3768038.9	174.3	3.66	9.30	3.40	YES	HRDOW
L0001856	0	0.40000E-01	397222.9	3768030.2	176.5	3.66	9.30	3.40	YES	HRDOW
L0001857	0	0.40000E-01	397204.0	3768023.9	177.4	3.66	9.30			

```
3.40     YES   HRDOW
 L0001858         0   0.40000E-01  397184.8 3768018.4   177.3     3.66     9.30
3.40     YES   HRDOW
 L0001859         0   0.40000E-01  397165.1 3768014.6   177.7     3.66     9.30
3.40     YES   HRDOW
 L0001860         0   0.40000E-01  397153.9 3768005.4   177.9     3.66     9.30
3.40     YES   HRDOW
 L0001861         0   0.40000E-01  397156.9 3767985.6   179.4     3.66     9.30
3.40     YES   HRDOW
 L0001862         0   0.40000E-01  397165.8 3767968.4   181.3     3.66     9.30
3.40     YES   HRDOW
 L0001863         0   0.40000E-01  397184.2 3767961.0   184.1     3.66     9.30
3.40     YES   HRDOW
 L0001864         0   0.40000E-01  397204.0 3767958.9   185.7     3.66     9.30
3.40     YES   HRDOW
 L0001865         0   0.40000E-01  397223.9 3767958.0   186.9     3.66     9.30
3.40     YES   HRDOW
 L0001866         0   0.40000E-01  397243.9 3767957.6   187.2     3.66     9.30
3.40     YES   HRDOW
 L0001867         0   0.40000E-01  397263.9 3767957.4   187.5     3.66     9.30
3.40     YES   HRDOW
 L0001868         0   0.40000E-01  397282.1 3767963.8   187.8     3.66     9.30
3.40     YES   HRDOW
 L0001869         0   0.40000E-01  397294.1 3767979.6   189.4     3.66     9.30
3.40     YES   HRDOW
 L0001870         0   0.11364E-01  397004.7 3767868.3   162.3     3.66     9.30
3.40     YES   HRDOW
 L0001871         0   0.11364E-01  396996.0 3767886.3   165.6     3.66     9.30
3.40     YES   HRDOW
 L0001872         0   0.11364E-01  396984.7 3767902.8   169.7     3.66     9.30
3.40     YES   HRDOW
 L0001873         0   0.11364E-01  396973.5 3767919.4   174.4     3.66     9.30
3.40     YES   HRDOW
 L0001874         0   0.11364E-01  396963.4 3767936.6   178.3     3.66     9.30
3.40     YES   HRDOW
 L0001875         0   0.11364E-01  396960.0 3767955.6   178.8     3.66     9.30
3.40     YES   HRDOW
 L0001876         0   0.11364E-01  396960.5 3767975.6   178.7     3.66     9.30
3.40     YES   HRDOW
 L0001877         0   0.11364E-01  396960.9 3767995.6   178.1     3.66     9.30
3.40     YES   HRDOW
```

*** MODELOPTs: RegDFAULT CONC ELEV URBAN ADJ_U*

*** VOLUME SOURCE DATA ***

SOURCE ID	NUMBER PART. CATS.	EMISSION RATE (GRAMS/SEC)	X (METERS)	Y (METERS)	BASE ELEV. (METERS)	RELEASE HEIGHT (METERS)	INIT. SY (METERS)	INIT. SZ (METERS)	URBAN SOURCE	EMISSION RATE SCALAR VARY BY
L0001878	0	0.11364E-01	396961.3	3768015.6	177.1	3.66	9.30	3.40	YES	HRDOW
L0001879	0	0.11364E-01	396942.3	3768016.4	176.9	3.66	9.30	3.40	YES	HRDOW
L0001880	0	0.11364E-01	396922.3	3768016.2	176.9	3.66	9.30	3.40	YES	HRDOW
L0001881	0	0.11364E-01	396902.3	3768015.9	176.9	3.66	9.30	3.40	YES	HRDOW
L0001882	0	0.11364E-01	396882.6	3768019.3	177.1	3.66	9.30	3.40	YES	HRDOW
L0001883	0	0.11364E-01	396863.3	3768024.3	177.0	3.66	9.30	3.40	YES	HRDOW
L0001884	0	0.11364E-01	396844.6	3768031.2	177.2	3.66	9.30	3.40	YES	HRDOW
L0001885	0	0.11364E-01	396828.1	3768042.4	177.2	3.66	9.30	3.40	YES	HRDOW
L0001886	0	0.11364E-01	396813.3	3768055.6	177.1	3.66	9.30	3.40	YES	HRDOW
L0001887	0	0.11364E-01	396801.0	3768071.3	177.1	3.66	9.30	3.40	YES	HRDOW
L0001888	0	0.11364E-01	396788.6	3768087.1	177.1	3.66	9.30	3.40	YES	HRDOW
L0001889	0	0.11364E-01	396776.7	3768103.1	177.2	3.66	9.30	3.40	YES	HRDOW
L0001890	0	0.11364E-01	396765.4	3768119.6	176.9	3.66	9.30	3.40	YES	HRDOW
L0001891	0	0.11364E-01	396754.4	3768136.3	177.2	3.66	9.30	3.40	YES	HRDOW
L0001892	0	0.11364E-01	396743.9	3768153.3	177.2	3.66	9.30	3.40	YES	HRDOW
L0001893	0	0.11364E-01	396733.5	3768170.4	177.0	3.66	9.30	3.40	YES	HRDOW
L0001894	0	0.11364E-01	396722.3	3768187.0	177.1	3.66	9.30	3.40	YES	HRDOW
L0001895	0	0.11364E-01	396711.1	3768203.5	177.0	3.66	9.30	3.40	YES	HRDOW
L0001896	0	0.11364E-01	396700.1	3768220.2	177.2	3.66	9.30	3.40	YES	HRDOW
L0001897	0	0.11364E-01	396689.9	3768237.4	177.2	3.66	9.30			

```
3.40     YES   HRDOW
 L0001898         0   0.11364E-01  396684.7 3768256.7   177.2     3.66     9.30
3.40     YES   HRDOW
 L0001899         0   0.11364E-01  396680.4 3768276.1   177.3     3.66     9.30
3.40     YES   HRDOW
 L0001900         0   0.11364E-01  396681.4 3768296.0   177.1     3.66     9.30
3.40     YES   HRDOW
 L0001901         0   0.11364E-01  396683.8 3768315.9   177.4     3.66     9.30
3.40     YES   HRDOW
 L0001902         0   0.11364E-01  396686.6 3768335.6   177.3     3.66     9.30
3.40     YES   HRDOW
 L0001903         0   0.11364E-01  396695.3 3768353.6   177.2     3.66     9.30
3.40     YES   HRDOW
 L0001904         0   0.11364E-01  396707.5 3768369.1   177.1     3.66     9.30
3.40     YES   HRDOW
 L0001905         0   0.11364E-01  396721.5 3768383.5   177.1     3.66     9.30
3.40     YES   HRDOW
 L0001906         0   0.11364E-01  396736.1 3768397.1   177.1     3.66     9.30
3.40     YES   HRDOW
 L0001907         0   0.11364E-01  396751.4 3768409.9   177.1     3.66     9.30
3.40     YES   HRDOW
 L0001908         0   0.11364E-01  396770.2 3768416.6   177.1     3.66     9.30
3.40     YES   HRDOW
 L0001909         0   0.11364E-01  396789.7 3768420.9   177.0     3.66     9.30
3.40     YES   HRDOW
 L0001910         0   0.11364E-01  396809.5 3768423.5   177.2     3.66     9.30
3.40     YES   HRDOW
 L0001911         0   0.11364E-01  396829.1 3768422.9   177.3     3.66     9.30
3.40     YES   HRDOW
 L0001912         0   0.11364E-01  396848.4 3768417.7   176.9     3.66     9.30
3.40     YES   HRDOW
 L0001913         0   0.11364E-01  396867.5 3768411.7   177.3     3.66     9.30
3.40     YES   HRDOW
 L0001914         0   0.11364E-01  396886.0 3768404.2   177.0     3.66     9.30
3.40     YES   HRDOW
 L0001915         0   0.11364E-01  396904.6 3768396.7   176.9     3.66     9.30
3.40     YES   HRDOW
 L0001916         0   0.11364E-01  396922.7 3768388.4   177.0     3.66     9.30
3.40     YES   HRDOW
 L0001917         0   0.11364E-01  396940.9 3768380.1   177.1     3.66     9.30
3.40     YES   HRDOW
```

*** MODELOPTs: RegDFAULT CONC ELEV URBAN ADJ_U*

*** VOLUME SOURCE DATA ***

SOURCE ID	NUMBER PART. CATS.	EMISSION RATE (GRAMS/SEC)	X (METERS)	Y (METERS)	BASE ELEV. (METERS)	RELEASE HEIGHT (METERS)	INIT. SY (METERS)	INIT. SZ (METERS)	URBAN SOURCE	EMISSION RATE SCALAR VARY BY
L0001918	0	0.11364E-01	396959.0	3768371.5	177.1	3.66	9.30	3.40	YES	HRDOW
L0001919	0	0.11364E-01	396977.1	3768363.0	176.9	3.66	9.30	3.40	YES	HRDOW
L0001920	0	0.11364E-01	396995.3	3768354.7	176.7	3.66	9.30	3.40	YES	HRDOW
L0001921	0	0.11364E-01	397013.5	3768346.3	176.9	3.66	9.30	3.40	YES	HRDOW
L0001922	0	0.11364E-01	397031.8	3768338.4	177.2	3.66	9.30	3.40	YES	HRDOW
L0001923	0	0.11364E-01	397050.8	3768332.1	176.9	3.66	9.30	3.40	YES	HRDOW
L0001924	0	0.11364E-01	397069.2	3768324.5	177.1	3.66	9.30	3.40	YES	HRDOW
L0001925	0	0.11364E-01	397087.3	3768315.9	177.1	3.66	9.30	3.40	YES	HRDOW
L0001926	0	0.11364E-01	397105.4	3768307.3	177.2	3.66	9.30	3.40	YES	HRDOW
L0001927	0	0.11364E-01	397123.6	3768299.1	176.9	3.66	9.30	3.40	YES	HRDOW
L0001928	0	0.11364E-01	397141.9	3768290.9	176.8	3.66	9.30	3.40	YES	HRDOW
L0001929	0	0.11364E-01	397160.2	3768283.0	176.9	3.66	9.30	3.40	YES	HRDOW
L0001930	0	0.11364E-01	397178.6	3768275.2	177.1	3.66	9.30	3.40	YES	HRDOW
L0001931	0	0.11364E-01	397196.2	3768265.7	177.2	3.66	9.30	3.40	YES	HRDOW
L0001932	0	0.11364E-01	397213.4	3768255.5	177.1	3.66	9.30	3.40	YES	HRDOW
L0001933	0	0.11364E-01	397228.8	3768242.8	177.0	3.66	9.30	3.40	YES	HRDOW
L0001934	0	0.11364E-01	397240.9	3768227.1	176.8	3.66	9.30	3.40	YES	HRDOW
L0001935	0	0.11364E-01	397251.4	3768210.1	176.9	3.66	9.30	3.40	YES	HRDOW
L0001936	0	0.11364E-01	397259.9	3768192.0	176.9	3.66	9.30	3.40	YES	HRDOW
L0001937	0	0.11364E-01	397264.7	3768173.0	177.3	3.66	9.30			

```
3.40     YES   HRDOW
 L0001938         0   0.11364E-01  397264.7 3768153.0   176.9     3.66     9.30
3.40     YES   HRDOW
 L0001939         0   0.11364E-01  397264.1 3768133.0   177.0     3.66     9.30
3.40     YES   HRDOW
 L0001940         0   0.11364E-01  397260.6 3768113.4   176.6     3.66     9.30
3.40     YES   HRDOW
 L0001941         0   0.11364E-01  397256.2 3768093.9   177.1     3.66     9.30
3.40     YES   HRDOW
 L0001942         0   0.11364E-01  397246.1 3768076.8   177.3     3.66     9.30
3.40     YES   HRDOW
 L0001943         0   0.11364E-01  397235.1 3768060.1   177.1     3.66     9.30
3.40     YES   HRDOW
 L0001944         0   0.11364E-01  397220.6 3768046.3   177.2     3.66     9.30
3.40     YES   HRDOW
 L0001945         0   0.11364E-01  397205.2 3768033.8   177.0     3.66     9.30
3.40     YES   HRDOW
 L0001946         0   0.11364E-01  397186.9 3768025.7   177.1     3.66     9.30
3.40     YES   HRDOW
 L0001947         0   0.11364E-01  397168.3 3768018.6   177.4     3.66     9.30
3.40     YES   HRDOW
 L0001948         0   0.11364E-01  397148.8 3768014.2   177.3     3.66     9.30
3.40     YES   HRDOW
 L0001949         0   0.11364E-01  397128.9 3768013.6   177.4     3.66     9.30
3.40     YES   HRDOW
 L0001950         0   0.11364E-01  397108.9 3768013.6   177.7     3.66     9.30
3.40     YES   HRDOW
 L0001951         0   0.11364E-01  397088.9 3768013.2   177.0     3.66     9.30
3.40     YES   HRDOW
 L0001952         0   0.11364E-01  397068.9 3768012.9   176.9     3.66     9.30
3.40     YES   HRDOW
 L0001953         0   0.11364E-01  397048.9 3768013.3   176.9     3.66     9.30
3.40     YES   HRDOW
 L0001954         0   0.11364E-01  397028.9 3768013.7   177.3     3.66     9.30
3.40     YES   HRDOW
 L0001955         0   0.11364E-01  397008.9 3768014.0   177.3     3.66     9.30
3.40     YES   HRDOW
 L0001956         0   0.11364E-01  396988.9 3768014.4   177.3     3.66     9.30
3.40     YES   HRDOW
 L0001957         0   0.11364E-01  396968.9 3768015.7   177.2     3.66     9.30
3.40     YES   HRDOW
```

*** MODELOPTs: RegDFAULT CONC ELEV URBAN ADJ_U*

*** VOLUME SOURCE DATA ***

SOURCE ID	NUMBER PART. CATS.	EMISSION RATE (GRAMS/SEC)	X (METERS)	Y (METERS)	BASE ELEV. (METERS)	RELEASE HEIGHT (METERS)	INIT. SY (METERS)	INIT. SZ (METERS)	URBAN SOURCE ID	EMISSION RATE SCALAR VARY BY
L0001958	0	0.16949E-01	396665.4	3768398.1	176.8	3.66	9.30	3.40	YES	HRDOW
L0001959	0	0.16949E-01	396646.8	3768390.7	172.1	3.66	9.30	3.40	YES	HRDOW
L0001960	0	0.16949E-01	396628.2	3768383.4	168.3	3.66	9.30	3.40	YES	HRDOW
L0001961	0	0.16949E-01	396609.6	3768376.0	166.0	3.66	9.30	3.40	YES	HRDOW
L0001962	0	0.16949E-01	396600.0	3768358.8	164.4	3.66	9.30	3.40	YES	HRDOW
L0001963	0	0.16949E-01	396591.0	3768340.9	163.7	3.66	9.30	3.40	YES	HRDOW
L0001964	0	0.16949E-01	396582.0	3768323.1	162.8	3.66	9.30	3.40	YES	HRDOW
L0001965	0	0.16949E-01	396573.0	3768305.2	162.0	3.66	9.30	3.40	YES	HRDOW
L0001966	0	0.16949E-01	396564.8	3768287.0	161.6	3.66	9.30	3.40	YES	HRDOW
L0001967	0	0.16949E-01	396557.1	3768268.5	161.4	3.66	9.30	3.40	YES	HRDOW
L0001968	0	0.16949E-01	396549.5	3768250.1	159.1	3.66	9.30	3.40	YES	HRDOW
L0001969	0	0.16949E-01	396544.9	3768230.9	156.5	3.66	9.30	3.40	YES	HRDOW
L0001970	0	0.16949E-01	396544.0	3768210.9	156.5	3.66	9.30	3.40	YES	HRDOW
L0001971	0	0.16949E-01	396543.1	3768190.9	156.3	3.66	9.30	3.40	YES	HRDOW
L0001972	0	0.16949E-01	396542.2	3768170.9	156.1	3.66	9.30	3.40	YES	HRDOW
L0001973	0	0.16949E-01	396541.6	3768151.0	156.0	3.66	9.30	3.40	YES	HRDOW
L0001974	0	0.16949E-01	396541.9	3768131.0	154.8	3.66	9.30	3.40	YES	HRDOW
L0001975	0	0.16949E-01	396542.2	3768111.0	154.9	3.66	9.30	3.40	YES	HRDOW
L0001976	0	0.16949E-01	396540.5	3768091.1	153.2	3.66	9.30	3.40	YES	HRDOW
L0001977	0	0.16949E-01	396537.1	3768071.4	148.7	3.66	9.30			

```
3.40     YES   HRDOW
 L0001978         0   0.16949E-01  396535.4 3768051.5   144.3     3.66     9.30
3.40     YES   HRDOW
 L0001979         0   0.16949E-01  396533.8 3768031.6   140.0     3.66     9.30
3.40     YES   HRDOW
 L0001980         0   0.16949E-01  396536.7 3768011.9   134.6     3.66     9.30
3.40     YES   HRDOW
 L0001981         0   0.16949E-01  396540.5 3767992.2   131.0     3.66     9.30
3.40     YES   HRDOW
 L0001982         0   0.16949E-01  396544.2 3767972.6   130.8     3.66     9.30
3.40     YES   HRDOW
 L0001983         0   0.16949E-01  396548.0 3767953.0   131.2     3.66     9.30
3.40     YES   HRDOW
 L0001984         0   0.16949E-01  396558.1 3767961.3   134.5     3.66     9.30
3.40     YES   HRDOW
 L0001985         0   0.16949E-01  396570.0 3767977.4   139.2     3.66     9.30
3.40     YES   HRDOW
 L0001986         0   0.16949E-01  396581.9 3767993.5   142.0     3.66     9.30
3.40     YES   HRDOW
 L0001987         0   0.16949E-01  396593.8 3768009.5   143.5     3.66     9.30
3.40     YES   HRDOW
 L0001988         0   0.16949E-01  396610.9 3768016.6   143.9     3.66     9.30
3.40     YES   HRDOW
 L0001989         0   0.16949E-01  396630.8 3768019.0   145.7     3.66     9.30
3.40     YES   HRDOW
 L0001990         0   0.16949E-01  396645.0 3768006.3   145.3     3.66     9.30
3.40     YES   HRDOW
 L0001991         0   0.16949E-01  396658.4 3767991.5   148.0     3.66     9.30
3.40     YES   HRDOW
 L0001992         0   0.16949E-01  396667.5 3767973.7   146.3     3.66     9.30
3.40     YES   HRDOW
 L0001993         0   0.16949E-01  396666.1 3767955.8   143.6     3.66     9.30
3.40     YES   HRDOW
 L0001994         0   0.16949E-01  396657.1 3767937.9   138.9     3.66     9.30
3.40     YES   HRDOW
 L0001995         0   0.16949E-01  396646.7 3767920.9   134.5     3.66     9.30
3.40     YES   HRDOW
 L0001996         0   0.16949E-01  396635.6 3767904.2   131.8     3.66     9.30
3.40     YES   HRDOW
 L0001997         0   0.16949E-01  396634.3 3767888.4   129.0     3.66     9.30
3.40     YES   HRDOW
```

*** MODELOPTs: RegDFAULT CONC ELEV URBAN ADJ_U*

*** VOLUME SOURCE DATA ***

SOURCE ID	NUMBER PART. CATS.	EMISSION RATE (GRAMS/SEC)	X (METERS)	Y (METERS)	BASE ELEV. (METERS)	RELEASE HEIGHT (METERS)	INIT. SY (METERS)	INIT. SZ (METERS)	URBAN SOURCE	EMISSION RATE SCALAR VARY BY
L0001998	0	0.16949E-01	396647.9	3767873.8	128.0	3.66	9.30	3.40	YES	HRDOW
L0001999	0	0.16949E-01	396661.1	3767858.8	130.6	3.66	9.30	3.40	YES	HRDOW
L0002000	0	0.16949E-01	396676.3	3767849.3	134.7	3.66	9.30	3.40	YES	HRDOW
L0002001	0	0.16949E-01	396696.3	3767849.1	138.7	3.66	9.30	3.40	YES	HRDOW
L0002002	0	0.16949E-01	396716.3	3767848.9	141.1	3.66	9.30	3.40	YES	HRDOW
L0002003	0	0.16949E-01	396736.3	3767848.8	141.9	3.66	9.30	3.40	YES	HRDOW
L0002004	0	0.16949E-01	396756.3	3767848.6	141.9	3.66	9.30	3.40	YES	HRDOW
L0002005	0	0.16949E-01	396776.3	3767848.4	142.8	3.66	9.30	3.40	YES	HRDOW
L0002006	0	0.16949E-01	396796.3	3767848.2	144.5	3.66	9.30	3.40	YES	HRDOW
L0002007	0	0.16949E-01	396816.3	3767848.1	145.7	3.66	9.30	3.40	YES	HRDOW
L0002008	0	0.16949E-01	396836.3	3767847.9	147.2	3.66	9.30	3.40	YES	HRDOW
L0002009	0	0.16949E-01	396856.2	3767848.8	149.3	3.66	9.30	3.40	YES	HRDOW
L0002010	0	0.16949E-01	396876.2	3767849.9	151.2	3.66	9.30	3.40	YES	HRDOW
L0002011	0	0.16949E-01	396896.2	3767850.9	152.1	3.66	9.30	3.40	YES	HRDOW
L0002012	0	0.16949E-01	396916.2	3767852.0	152.6	3.66	9.30	3.40	YES	HRDOW
L0002013	0	0.16949E-01	396936.1	3767853.5	154.5	3.66	9.30	3.40	YES	HRDOW
L0002014	0	0.16949E-01	396956.0	3767855.3	157.2	3.66	9.30	3.40	YES	HRDOW
L0002015	0	0.16949E-01	396975.9	3767857.3	160.1	3.66	9.30	3.40	YES	HRDOW
L0002016	0	0.16949E-01	396995.0	3767863.1	161.8	3.66	9.30	3.40	YES	HRDOW
L0002017	0	0.40000E-01	396673.4	3768421.4	177.8	3.66	9.30			

```
3.40     YES   HRDOW
 L0002018         0   0.40000E-01  396670.5 3768441.2   177.7     3.66     9.30
3.40     YES   HRDOW
 L0002019         0   0.40000E-01  396673.9 3768459.2   176.4     3.66     9.30
3.40     YES   HRDOW
 L0002020         0   0.40000E-01  396688.7 3768471.7   173.5     3.66     9.30
3.40     YES   HRDOW
 L0002021         0   0.40000E-01  396707.3 3768479.0   170.7     3.66     9.30
3.40     YES   HRDOW
 L0002022         0   0.40000E-01  396726.0 3768486.1   167.1     3.66     9.30
3.40     YES   HRDOW
 L0002023         0   0.40000E-01  396745.2 3768491.8   163.9     3.66     9.30
3.40     YES   HRDOW
 L0002024         0   0.40000E-01  396764.3 3768497.6   160.4     3.66     9.30
3.40     YES   HRDOW
 L0002025         0   0.40000E-01  396783.3 3768503.9   156.7     3.66     9.30
3.40     YES   HRDOW
 L0002026         0   0.40000E-01  396802.0 3768511.0   153.8     3.66     9.30
3.40     YES   HRDOW
 L0002027         0   0.40000E-01  396820.6 3768518.2   151.0     3.66     9.30
3.40     YES   HRDOW
 L0002028         0   0.40000E-01  396837.2 3768528.6   148.6     3.66     9.30
3.40     YES   HRDOW
 L0002029         0   0.40000E-01  396857.1 3768529.0   147.8     3.66     9.30
3.40     YES   HRDOW
 L0002030         0   0.40000E-01  396876.7 3768532.3   148.0     3.66     9.30
3.40     YES   HRDOW
 L0002031         0   0.40000E-01  396896.4 3768534.3   148.5     3.66     9.30
3.40     YES   HRDOW
 L0002032         0   0.40000E-01  396916.3 3768532.3   147.6     3.66     9.30
3.40     YES   HRDOW
 L0002033         0   0.40000E-01  396932.4 3768523.5   147.5     3.66     9.30
3.40     YES   HRDOW
 L0002034         0   0.40000E-01  396943.4 3768507.2   149.6     3.66     9.30
3.40     YES   HRDOW
 L0002035         0   0.40000E-01  396943.3 3768487.4   153.1     3.66     9.30
3.40     YES   HRDOW
 L0002036         0   0.40000E-01  396933.6 3768469.9   157.1     3.66     9.30
3.40     YES   HRDOW
 L0002037         0   0.40000E-01  396917.3 3768466.6   158.8     3.66     9.30
3.40     YES   HRDOW
```

*** MODELOPTs: RegDFAULT CONC ELEV URBAN ADJ_U*

*** VOLUME SOURCE DATA ***

SOURCE ID	NUMBER PART. CATS.	EMISSION RATE (GRAMS/SEC)	X (METERS)	Y (METERS)	BASE ELEV. (METERS)	RELEASE HEIGHT (METERS)	INIT. SY (METERS)	INIT. SZ (METERS)	URBAN SOURCE	EMISSION RATE SCALAR VARY BY
L0002038	0	0.40000E-01	396901.7	3768479.2	156.8	3.66	9.30	3.40	YES	HRDOW
L0002039	0	0.40000E-01	396886.1	3768491.7	154.3	3.66	9.30	3.40	YES	HRDOW
L0002040	0	0.40000E-01	396870.9	3768504.6	151.9	3.66	9.30	3.40	YES	HRDOW
L0002041	0	0.40000E-01	396856.6	3768518.5	148.9	3.66	9.30	3.40	YES	HRDOW
L0002042	0	0.71429E-01	396617.8	3768035.7	147.3	3.66	9.30	3.40	YES	HRDOW
L0002043	0	0.71429E-01	396628.0	3768052.8	151.3	3.66	9.30	3.40	YES	HRDOW
L0002044	0	0.71429E-01	396638.4	3768069.9	155.6	3.66	9.30	3.40	YES	HRDOW
L0002045	0	0.71429E-01	396648.7	3768087.0	159.7	3.66	9.30	3.40	YES	HRDOW
L0002046	0	0.71429E-01	396655.4	3768105.7	162.2	3.66	9.30	3.40	YES	HRDOW
L0002047	0	0.71429E-01	396670.0	3768118.3	164.0	3.66	9.30	3.40	YES	HRDOW
L0002048	0	0.71429E-01	396685.1	3768130.8	166.4	3.66	9.30	3.40	YES	HRDOW
L0002049	0	0.71429E-01	396691.6	3768148.5	168.6	3.66	9.30	3.40	YES	HRDOW
L0002050	0	0.71429E-01	396680.3	3768164.7	167.4	3.66	9.30	3.40	YES	HRDOW
L0002051	0	0.71429E-01	396665.9	3768178.6	165.6	3.66	9.30	3.40	YES	HRDOW
L0002052	0	0.71429E-01	396657.9	3768195.8	166.9	3.66	9.30	3.40	YES	HRDOW
L0002053	0	0.71429E-01	396654.5	3768215.5	170.8	3.66	9.30	3.40	YES	HRDOW
L0002054	0	0.71429E-01	396651.0	3768235.2	174.7	3.66	9.30	3.40	YES	HRDOW
L0002055	0	0.71429E-01	396647.6	3768254.9	177.6	3.66	9.30	3.40	YES	HRDOW
L0002056	0	0.76923E-01	397330.9	3768104.7	161.6	3.66	9.30	3.40	YES	HRDOW
L0002057	0	0.76923E-01	397346.2	3768091.9	158.0	3.66	9.30			

```
3.40     YES   HRDOW
 L0002058         0   0.76923E-01  397340.6 3768078.4   160.6     3.66     9.30
3.40     YES   HRDOW
 L0002059         0   0.76923E-01  397326.3 3768092.3   163.4     3.66     9.30
3.40     YES   HRDOW
 L0002060         0   0.76923E-01  397311.2 3768084.2   166.4     3.66     9.30
3.40     YES   HRDOW
 L0002061         0   0.76923E-01  397325.6 3768070.3   165.7     3.66     9.30
3.40     YES   HRDOW
 L0002062         0   0.76923E-01  397339.9 3768056.4   166.2     3.66     9.30
3.40     YES   HRDOW
 L0002063         0   0.76923E-01  397352.9 3768059.1   166.6     3.66     9.30
3.40     YES   HRDOW
 L0002064         0   0.76923E-01  397364.9 3768075.2   162.8     3.66     9.30
3.40     YES   HRDOW
 L0002065         0   0.76923E-01  397376.9 3768082.8   161.9     3.66     9.30
3.40     YES   HRDOW
 L0002066         0   0.76923E-01  397383.7 3768067.0   167.6     3.66     9.30
3.40     YES   HRDOW
 L0002067         0   0.76923E-01  397370.3 3768052.2   171.5     3.66     9.30
3.40     YES   HRDOW
 L0002068         0   0.76923E-01  397356.9 3768037.3   176.3     3.66     9.30
3.40     YES   HRDOW
 L0002069         0   0.55556E-01  397121.3 3767861.2   144.8     3.66     9.30
3.40     YES   HRDOW
 L0002070         0   0.55556E-01  397139.0 3767870.2   146.6     3.66     9.30
3.40     YES   HRDOW
 L0002071         0   0.55556E-01  397149.5 3767886.2   150.5     3.66     9.30
3.40     YES   HRDOW
 L0002072         0   0.55556E-01  397158.3 3767903.0   153.9     3.66     9.30
3.40     YES   HRDOW
 L0002073         0   0.55556E-01  397175.0 3767896.5   157.3     3.66     9.30
3.40     YES   HRDOW
 L0002074         0   0.55556E-01  397178.2 3767878.1   159.5     3.66     9.30
3.40     YES   HRDOW
 L0002075         0   0.55556E-01  397190.6 3767864.3   159.1     3.66     9.30
3.40     YES   HRDOW
 L0002076         0   0.55556E-01  397210.0 3767859.4   159.9     3.66     9.30
3.40     YES   HRDOW
 L0002077         0   0.55556E-01  397229.5 3767854.7   159.9     3.66     9.30
3.40     YES   HRDOW
```

*** MODELOPTs: RegDFAULT CONC ELEV URBAN ADJ_U*

*** VOLUME SOURCE DATA ***

SOURCE ID	NUMBER PART. CATS.	EMISSION RATE (GRAMS/SEC)	X (METERS)	Y (METERS)	BASE ELEV. (METERS)	RELEASE HEIGHT (METERS)	INIT. SY (METERS)	INIT. SZ (METERS)	URBAN SOURCE	EMISSION RATE SCALAR VARY BY
L0002078	0	0.55556E-01	397249.3	3767851.8	159.9	3.66	9.30	3.40	YES	HRDOW
L0002079	0	0.55556E-01	397269.1	3767849.8	160.5	3.66	9.30	3.40	YES	HRDOW
L0002080	0	0.55556E-01	397289.1	3767849.5	161.6	3.66	9.30	3.40	YES	HRDOW
L0002081	0	0.55556E-01	397308.9	3767847.3	162.2	3.66	9.30	3.40	YES	HRDOW
L0002082	0	0.55556E-01	397328.9	3767847.2	161.6	3.66	9.30	3.40	YES	HRDOW
L0002083	0	0.55556E-01	397348.5	3767851.1	159.4	3.66	9.30	3.40	YES	HRDOW
L0002084	0	0.55556E-01	397367.5	3767857.5	158.6	3.66	9.30	3.40	YES	HRDOW
L0002085	0	0.55556E-01	397386.5	3767863.7	158.0	3.66	9.30	3.40	YES	HRDOW
L0002086	0	0.55556E-01	397405.7	3767869.2	157.0	3.66	9.30	3.40	YES	HRDOW
L0003711	0	0.17241E-01	397355.6	3768204.8	154.2	3.66	5.58	3.40	YES	HRDOW
L0003712	0	0.17241E-01	397349.5	3768215.1	154.1	3.66	5.58	3.40	YES	HRDOW
L0003713	0	0.17241E-01	397343.4	3768225.4	154.1	3.66	5.58	3.40	YES	HRDOW
L0003714	0	0.17241E-01	397337.2	3768235.7	154.0	3.66	5.58	3.40	YES	HRDOW
L0003715	0	0.17241E-01	397331.1	3768246.1	154.0	3.66	5.58	3.40	YES	HRDOW
L0003716	0	0.17241E-01	397325.0	3768256.4	153.9	3.66	5.58	3.40	YES	HRDOW
L0003717	0	0.17241E-01	397318.9	3768266.7	153.9	3.66	5.58	3.40	YES	HRDOW
L0003718	0	0.17241E-01	397312.8	3768277.0	153.8	3.66	5.58	3.40	YES	HRDOW
L0003719	0	0.17241E-01	397307.4	3768287.7	153.8	3.66	5.58	3.40	YES	HRDOW
L0003720	0	0.17241E-01	397302.7	3768298.8	153.7	3.66	5.58	3.40	YES	HRDOW
L0003721	0	0.17241E-01	397298.1	3768309.9	153.8	3.66	5.58			

```
3.40     YES   HRDOW
 L0003722         0   0.17241E-01  397293.5 3768320.9   153.7     3.66     5.58
3.40     YES   HRDOW
 L0003723         0   0.17241E-01  397293.4 3768332.8   153.6     3.66     5.58
3.40     YES   HRDOW
 L0003724         0   0.17241E-01  397293.7 3768344.8   153.6     3.66     5.58
3.40     YES   HRDOW
 L0003725         0   0.17241E-01  397294.1 3768356.8   153.6     3.66     5.58
3.40     YES   HRDOW
 L0003726         0   0.17241E-01  397294.5 3768368.8   153.5     3.66     5.58
3.40     YES   HRDOW
 L0003727         0   0.17241E-01  397294.9 3768380.8   153.5     3.66     5.58
3.40     YES   HRDOW
 L0003728         0   0.17241E-01  397295.3 3768392.8   153.4     3.66     5.58
3.40     YES   HRDOW
 L0003729         0   0.17241E-01  397295.6 3768404.8   153.4     3.66     5.58
3.40     YES   HRDOW
 L0003730         0   0.17241E-01  397296.0 3768416.8   153.3     3.66     5.58
3.40     YES   HRDOW
 L0003731         0   0.17241E-01  397296.3 3768428.8   153.3     3.66     5.58
3.40     YES   HRDOW
 L0003732         0   0.17241E-01  397296.3 3768440.8   153.2     3.66     5.58
3.40     YES   HRDOW
 L0003733         0   0.17241E-01  397296.3 3768452.8   153.2     3.66     5.58
3.40     YES   HRDOW
 L0003734         0   0.17241E-01  397296.3 3768464.8   153.1     3.66     5.58
3.40     YES   HRDOW
 L0003735         0   0.17241E-01  397296.3 3768476.8   152.8     3.66     5.58
3.40     YES   HRDOW
 L0003736         0   0.17241E-01  397296.3 3768488.8   152.5     3.66     5.58
3.40     YES   HRDOW
 L0003737         0   0.17241E-01  397296.3 3768500.8   152.1     3.66     5.58
3.40     YES   HRDOW
 L0003738         0   0.17241E-01  397296.3 3768512.8   151.5     3.66     5.58
3.40     YES   HRDOW
 L0003739         0   0.17241E-01  397296.3 3768524.8   150.8     3.66     5.58
3.40     YES   HRDOW
 L0003740         0   0.17241E-01  397296.3 3768536.8   150.0     3.66     5.58
3.40     YES   HRDOW
 L0003741         0   0.17241E-01  397296.3 3768548.8   149.1     3.66     5.58
3.40     YES   HRDOW
```

*** MODELOPTs: RegDFAULT CONC ELEV URBAN ADJ_U*

*** VOLUME SOURCE DATA ***

SOURCE ID	NUMBER PART. CATS.	EMISSION RATE (GRAMS/SEC)	X (METERS)	Y (METERS)	BASE ELEV. (METERS)	RELEASE HEIGHT (METERS)	INIT. SY (METERS)	INIT. SZ (METERS)	URBAN SOURCE ID	EMISSION RATE SCALAR VARY BY
L0003742	0	0.17241E-01	397296.1	3768560.8	148.1	3.66	5.58	3.40	YES	HRDOW
L0003743	0	0.17241E-01	397295.4	3768572.8	147.0	3.66	5.58	3.40	YES	HRDOW
L0003744	0	0.17241E-01	397294.8	3768584.7	145.8	3.66	5.58	3.40	YES	HRDOW
L0003745	0	0.17241E-01	397294.1	3768596.7	144.5	3.66	5.58	3.40	YES	HRDOW
L0003746	0	0.17241E-01	397293.5	3768608.7	143.3	3.66	5.58	3.40	YES	HRDOW
L0003747	0	0.17241E-01	397291.9	3768620.5	142.2	3.66	5.58	3.40	YES	HRDOW
L0003748	0	0.17241E-01	397287.0	3768631.4	141.0	3.66	5.58	3.40	YES	HRDOW
L0003749	0	0.17241E-01	397281.7	3768642.2	140.0	3.66	5.58	3.40	YES	HRDOW
L0003750	0	0.17241E-01	397276.1	3768652.8	139.0	3.66	5.58	3.40	YES	HRDOW
L0003751	0	0.17241E-01	397270.5	3768663.4	138.1	3.66	5.58	3.40	YES	HRDOW
L0003752	0	0.17241E-01	397266.4	3768674.5	137.3	3.66	5.58	3.40	YES	HRDOW
L0003753	0	0.17241E-01	397265.5	3768686.4	136.5	3.66	5.58	3.40	YES	HRDOW
L0003754	0	0.17241E-01	397264.6	3768698.4	135.7	3.66	5.58	3.40	YES	HRDOW
L0003755	0	0.17241E-01	397266.6	3768710.0	134.9	3.66	5.58	3.40	YES	HRDOW
L0003756	0	0.17241E-01	397270.6	3768721.3	134.3	3.66	5.58	3.40	YES	HRDOW
L0003757	0	0.17241E-01	397274.6	3768732.6	133.6	3.66	5.58	3.40	YES	HRDOW
L0003758	0	0.17241E-01	397278.6	3768743.9	133.0	3.66	5.58	3.40	YES	HRDOW
L0003759	0	0.17241E-01	397282.5	3768755.2	132.2	3.66	5.58	3.40	YES	HRDOW
L0003760	0	0.17241E-01	397286.5	3768766.6	131.3	3.66	5.58	3.40	YES	HRDOW
L0003761	0	0.17241E-01	397291.7	3768777.3	130.4	3.66	5.58			

```
3.40     YES   HRDOW
 L0003762         0   0.17241E-01  397298.5 3768787.2   129.5     3.66     5.58
3.40     YES   HRDOW
 L0003763         0   0.17241E-01  397305.3 3768797.0   128.6     3.66     5.58
3.40     YES   HRDOW
 L0003764         0   0.17241E-01  397312.1 3768806.9   127.7     3.66     5.58
3.40     YES   HRDOW
 L0003765         0   0.17241E-01  397318.9 3768816.8   126.7     3.66     5.58
3.40     YES   HRDOW
 L0003766         0   0.17241E-01  397325.6 3768826.8   125.5     3.66     5.58
3.40     YES   HRDOW
 L0003767         0   0.17241E-01  397331.9 3768837.0   124.4     3.66     5.58
3.40     YES   HRDOW
 L0003768         0   0.17241E-01  397335.3 3768847.9   123.9     3.66     5.58
3.40     YES   HRDOW
 L0002339         0   0.14493E-01  397328.8 3768850.3   123.9     3.66     8.37
3.40     YES   HRDOW
 L0002340         0   0.14493E-01  397310.8 3768850.4   124.3     3.66     8.37
3.40     YES   HRDOW
 L0002341         0   0.14493E-01  397292.8 3768850.5   124.8     3.66     8.37
3.40     YES   HRDOW
 L0002342         0   0.14493E-01  397274.8 3768850.6   125.2     3.66     8.37
3.40     YES   HRDOW
 L0002343         0   0.14493E-01  397256.8 3768850.8   125.4     3.66     8.37
3.40     YES   HRDOW
 L0002344         0   0.14493E-01  397238.8 3768850.9   125.1     3.66     8.37
3.40     YES   HRDOW
 L0002345         0   0.14493E-01  397220.8 3768851.0   124.1     3.66     8.37
3.40     YES   HRDOW
 L0002346         0   0.14493E-01  397202.8 3768851.1   122.7     3.66     8.37
3.40     YES   HRDOW
 L0002347         0   0.14493E-01  397184.8 3768851.2   121.2     3.66     8.37
3.40     YES   HRDOW
 L0002348         0   0.14493E-01  397166.8 3768851.3   120.3     3.66     8.37
3.40     YES   HRDOW
 L0002349         0   0.14493E-01  397148.8 3768851.4   120.3     3.66     8.37
3.40     YES   HRDOW
 L0002350         0   0.14493E-01  397130.8 3768851.5   120.8     3.66     8.37
3.40     YES   HRDOW
 L0002351         0   0.14493E-01  397112.8 3768851.6   121.5     3.66     8.37
3.40     YES   HRDOW
```

*** MODELOPTs: RegDFAULT CONC ELEV URBAN ADJ_U*

*** VOLUME SOURCE DATA ***

SOURCE ID	NUMBER PART. CATS.	EMISSION RATE (GRAMS/SEC)	X (METERS)	Y (METERS)	BASE ELEV. (METERS)	RELEASE HEIGHT (METERS)	INIT. SY (METERS)	INIT. SZ (METERS)	URBAN SOURCE	EMISSION RATE SCALAR VARY BY
L0002352	0	0.14493E-01	397094.8	3768851.7	122.2	3.66	8.37	3.40	YES	HRDOW
L0002353	0	0.14493E-01	397076.8	3768851.8	122.9	3.66	8.37	3.40	YES	HRDOW
L0002354	0	0.14493E-01	397058.8	3768851.9	124.0	3.66	8.37	3.40	YES	HRDOW
L0002355	0	0.14493E-01	397040.8	3768852.0	125.7	3.66	8.37	3.40	YES	HRDOW
L0002356	0	0.14493E-01	397022.8	3768852.1	127.5	3.66	8.37	3.40	YES	HRDOW
L0002357	0	0.14493E-01	397004.8	3768852.2	129.2	3.66	8.37	3.40	YES	HRDOW
L0002358	0	0.14493E-01	396986.8	3768852.3	131.0	3.66	8.37	3.40	YES	HRDOW
L0002359	0	0.14493E-01	396968.8	3768852.4	132.8	3.66	8.37	3.40	YES	HRDOW
L0002360	0	0.14493E-01	396950.8	3768852.5	134.5	3.66	8.37	3.40	YES	HRDOW
L0002361	0	0.14493E-01	396932.8	3768852.6	136.0	3.66	8.37	3.40	YES	HRDOW
L0002362	0	0.14493E-01	396914.8	3768852.7	137.1	3.66	8.37	3.40	YES	HRDOW
L0002363	0	0.14493E-01	396896.8	3768852.8	138.2	3.66	8.37	3.40	YES	HRDOW
L0002364	0	0.14493E-01	396878.8	3768852.9	138.8	3.66	8.37	3.40	YES	HRDOW
L0002365	0	0.14493E-01	396860.8	3768853.0	138.6	3.66	8.37	3.40	YES	HRDOW
L0002366	0	0.14493E-01	396842.8	3768853.1	137.6	3.66	8.37	3.40	YES	HRDOW
L0002367	0	0.14493E-01	396824.8	3768853.2	136.2	3.66	8.37	3.40	YES	HRDOW
L0002368	0	0.14493E-01	396806.8	3768853.3	134.7	3.66	8.37	3.40	YES	HRDOW
L0002369	0	0.14493E-01	396788.8	3768853.4	133.3	3.66	8.37	3.40	YES	HRDOW
L0002370	0	0.14493E-01	396770.8	3768853.5	132.5	3.66	8.37	3.40	YES	HRDOW
L0002371	0	0.14493E-01	396752.8	3768853.7	132.7	3.66	8.37			

```
3.40     YES   HRDOW
 L0002372         0   0.14493E-01  396734.8 3768853.9   133.2     3.66     8.37
3.40     YES   HRDOW
 L0002373         0   0.14493E-01  396716.8 3768854.1   133.6     3.66     8.37
3.40     YES   HRDOW
 L0002374         0   0.14493E-01  396698.8 3768854.3   134.0     3.66     8.37
3.40     YES   HRDOW
 L0002375         0   0.14493E-01  396680.8 3768854.5   134.4     3.66     8.37
3.40     YES   HRDOW
 L0002376         0   0.14493E-01  396662.8 3768854.8   134.9     3.66     8.37
3.40     YES   HRDOW
 L0002377         0   0.14493E-01  396644.8 3768855.0   135.7     3.66     8.37
3.40     YES   HRDOW
 L0002378         0   0.14493E-01  396626.8 3768855.2   137.1     3.66     8.37
3.40     YES   HRDOW
 L0002379         0   0.14493E-01  396608.8 3768855.3   139.0     3.66     8.37
3.40     YES   HRDOW
 L0002380         0   0.14493E-01  396590.8 3768855.2   141.5     3.66     8.37
3.40     YES   HRDOW
 L0002381         0   0.14493E-01  396572.8 3768855.1   144.4     3.66     8.37
3.40     YES   HRDOW
 L0002382         0   0.14493E-01  396554.8 3768855.0   148.1     3.66     8.37
3.40     YES   HRDOW
 L0002383         0   0.14493E-01  396536.8 3768854.9   151.6     3.66     8.37
3.40     YES   HRDOW
 L0002384         0   0.14493E-01  396518.8 3768854.8   153.5     3.66     8.37
3.40     YES   HRDOW
 L0002385         0   0.14493E-01  396500.8 3768854.7   155.2     3.66     8.37
3.40     YES   HRDOW
 L0002386         0   0.14493E-01  396482.8 3768854.6   155.7     3.66     8.37
3.40     YES   HRDOW
 L0002387         0   0.14493E-01  396464.8 3768854.4   155.8     3.66     8.37
3.40     YES   HRDOW
 L0002388         0   0.14493E-01  396446.8 3768854.3   154.8     3.66     8.37
3.40     YES   HRDOW
 L0002389         0   0.14493E-01  396428.8 3768854.2   152.2     3.66     8.37
3.40     YES   HRDOW
 L0002390         0   0.14493E-01  396410.8 3768854.1   149.4     3.66     8.37
3.40     YES   HRDOW
 L0002391         0   0.14493E-01  396392.8 3768854.0   146.8     3.66     8.37
3.40     YES   HRDOW
```

*** MODELOPTs: RegDFAULT CONC ELEV URBAN ADJ_U*

*** VOLUME SOURCE DATA ***

SOURCE ID	NUMBER PART. CATS.	EMISSION RATE (GRAMS/SEC)	X (METERS)	Y (METERS)	BASE ELEV. (METERS)	RELEASE HEIGHT (METERS)	INIT. SY (METERS)	INIT. SZ (METERS)	URBAN SOURCE	EMISSION RATE SCALAR VARY BY
L0002392	0	0.14493E-01	396374.8	3768853.9	144.6	3.66	8.37	3.40	YES	HRDOW
L0002393	0	0.14493E-01	396356.8	3768853.7	143.8	3.66	8.37	3.40	YES	HRDOW
L0002394	0	0.14493E-01	396338.8	3768853.4	143.9	3.66	8.37	3.40	YES	HRDOW
L0002395	0	0.14493E-01	396320.8	3768853.1	144.2	3.66	8.37	3.40	YES	HRDOW
L0002396	0	0.14493E-01	396302.8	3768852.7	144.4	3.66	8.37	3.40	YES	HRDOW
L0002397	0	0.14493E-01	396284.8	3768852.4	144.5	3.66	8.37	3.40	YES	HRDOW
L0002398	0	0.14493E-01	396266.8	3768852.1	144.5	3.66	8.37	3.40	YES	HRDOW
L0002399	0	0.14493E-01	396248.8	3768851.7	144.4	3.66	8.37	3.40	YES	HRDOW
L0002400	0	0.14493E-01	396230.8	3768851.4	144.2	3.66	8.37	3.40	YES	HRDOW
L0002401	0	0.14493E-01	396212.9	3768851.0	144.1	3.66	8.37	3.40	YES	HRDOW
L0002402	0	0.14493E-01	396194.9	3768850.6	143.9	3.66	8.37	3.40	YES	HRDOW
L0002403	0	0.14493E-01	396176.9	3768849.9	142.7	3.66	8.37	3.40	YES	HRDOW
L0002404	0	0.14493E-01	396158.9	3768849.3	140.0	3.66	8.37	3.40	YES	HRDOW
L0002405	0	0.14493E-01	396140.9	3768848.6	137.1	3.66	8.37	3.40	YES	HRDOW
L0002406	0	0.14493E-01	396122.9	3768848.0	134.4	3.66	8.37	3.40	YES	HRDOW
L0002407	0	0.14493E-01	396104.9	3768847.3	132.9	3.66	8.37	3.40	YES	HRDOW

*** MODELOPTs: RegDFAULT CONC ELEV URBAN ADJ_U*

*** SOURCE IDs DEFINING SOURCE GROUPS
***

SRCGROUP ID	SOURCE IDs
ABWQL	ABWQL ,
EG	EG ,
FES	FES ,
IO	L0001843 , L0001844 ,
JS	JS ,
MISC1	L0001845 , L0001846 , L0001847 , L0001848 , L0001849 , L0001850 , L0001851 , L0001852 ,
	L0001853 , L0001854 , L0001855 , L0001856 , L0001857 , L0001858 , L0001859 , L0001860 ,
	L0001861 , L0001862 , L0001863 , L0001864 , L0001865 , L0001866 , L0001867 , L0001868 ,
	L0001869 ,
MISC2	L0001870 , L0001871 , L0001872 , L0001873 , L0001874 , L0001875 , L0001876 , L0001877 ,
	L0001878 , L0001879 , L0001880 , L0001881 , L0001882 , L0001883 , L0001884 , L0001885 ,
	L0001886 , L0001887 , L0001888 , L0001889 , L0001890 , L0001891 , L0001892 , L0001893 ,
	L0001894 , L0001895 , L0001896 , L0001897 , L0001898 , L0001899 , L0001900 , L0001901 ,
	L0001902 , L0001903 , L0001904 , L0001905 , L0001906 , L0001907 , L0001908 , L0001909 ,
	L0001910 , L0001911 , L0001912 , L0001913 , L0001914 , L0001915 , L0001916 , L0001917 ,
	L0001918 , L0001919 , L0001920 , L0001921 , L0001922 , L0001923 , L0001924 , L0001925 ,
	L0001926 , L0001927 , L0001928 , L0001929 ,

L0001930 , L0001931 , L0001932 , L0001933 ,

L0001934 , L0001935 , L0001936 , L0001937 ,
L0001938 , L0001939 , L0001940 , L0001941 ,

L0001942 , L0001943 , L0001944 , L0001945 ,
L0001946 , L0001947 , L0001948 , L0001949 ,

L0001950 , L0001951 , L0001952 , L0001953 ,
L0001954 , L0001955 , L0001956 , L0001957 ,

*** MODELOPTs: RegDFAULT CONC ELEV URBAN ADJ_U*

*** SOURCE IDs DEFINING SOURCE GROUPS
***

SRCGROUP ID	SOURCE IDs
MISC3	L0001958 , L0001959 , L0001960 , L0001961 , L0001962 , L0001963 , L0001964 , L0001965 ,
	L0001966 , L0001967 , L0001968 , L0001969 , L0001970 , L0001971 , L0001972 , L0001973 ,
	L0001974 , L0001975 , L0001976 , L0001977 , L0001978 , L0001979 , L0001980 , L0001981 ,
	L0001982 , L0001983 , L0001984 , L0001985 , L0001986 , L0001987 , L0001988 , L0001989 ,
	L0001990 , L0001991 , L0001992 , L0001993 , L0001994 , L0001995 , L0001996 , L0001997 ,
	L0001998 , L0001999 , L0002000 , L0002001 , L0002002 , L0002003 , L0002004 , L0002005 ,
	L0002006 , L0002007 , L0002008 , L0002009 , L0002010 , L0002011 , L0002012 , L0002013 ,
	L0002014 , L0002015 , L0002016 ,
MISC4	L0002017 , L0002018 , L0002019 , L0002020 , L0002021 , L0002022 , L0002023 , L0002024 ,
	L0002025 , L0002026 , L0002027 , L0002028 , L0002029 , L0002030 , L0002031 , L0002032 ,
	L0002033 , L0002034 , L0002035 , L0002036 , L0002037 , L0002038 , L0002039 , L0002040 ,
	L0002041 ,
MISC5	L0002042 , L0002043 , L0002044 , L0002045 , L0002046 , L0002047 , L0002048 , L0002049 ,
	L0002050 , L0002051 , L0002052 , L0002053 , L0002054 , L0002055 ,
MISC6	L0002069 , L0002070 , L0002071 , L0002072 , L0002073 , L0002074 , L0002075 , L0002076 ,

L0002077 , L0002078 , L0002079 , L0002080 ,
L0002081 , L0002082 , L0002083 , L0002084 ,

L0002085 , L0002086 ,

MISC7 L0002056 , L0002057 , L0002058 , L0002059 ,
L0002060 , L0002061 , L0002062 , L0002063 ,

L0002064 , L0002065 , L0002066 , L0002067 ,
L0002068 ,

PS PS ,

*** MODELOPTs: RegDFAULT CONC ELEV URBAN ADJ_U*

*** SOURCE IDs DEFINING SOURCE GROUPS
***

SRCGROUP ID	SOURCE IDs
RESIV	L0001804 , L0001805 , L0001806 , L0001807 , L0001808 , L0001809 , L0001810 , L0001811 ,
	L0001812 , L0001813 , L0001814 , L0001815 , L0001816 , L0001817 , L0001818 , L0001819 ,
	L0001820 , L0001821 , L0001822 , L0001823 , L0001824 , L0001825 , L0001826 , L0001827 ,
	L0001828 , L0001829 , L0001830 , L0001831 , L0001832 , L0001833 , L0001834 , L0001835 ,
	L0001836 , L0001837 , L0001838 , L0001839 , L0001840 , L0001841 , L0001842 ,
STT	STT ,
HAUL1	L0003711 , L0003712 , L0003713 , L0003714 , L0003715 , L0003716 , L0003717 , L0003718 ,
	L0003719 , L0003720 , L0003721 , L0003722 , L0003723 , L0003724 , L0003725 , L0003726 ,
	L0003727 , L0003728 , L0003729 , L0003730 , L0003731 , L0003732 , L0003733 , L0003734 ,
	L0003735 , L0003736 , L0003737 , L0003738 , L0003739 , L0003740 , L0003741 , L0003742 ,
	L0003743 , L0003744 , L0003745 , L0003746 , L0003747 , L0003748 , L0003749 , L0003750 ,
	L0003751 , L0003752 , L0003753 , L0003754 , L0003755 , L0003756 , L0003757 , L0003758 ,
	L0003759 , L0003760 , L0003761 , L0003762 , L0003763 , L0003764 , L0003765 , L0003766 ,
	L0003767 , L0003768 ,
HAUL2	L0002339 , L0002340 , L0002341 , L0002342 , L0002343 , L0002344 , L0002345 , L0002346 ,

L0002347 , L0002348 , L0002349 , L0002350 ,
L0002351 , L0002352 , L0002353 , L0002354 ,

L0002355 , L0002356 , L0002357 , L0002358 ,
L0002359 , L0002360 , L0002361 , L0002362 ,

L0002363 , L0002364 , L0002365 , L0002366 ,
L0002367 , L0002368 , L0002369 , L0002370 ,

L0002371 , L0002372 , L0002373 , L0002374 ,
L0002375 , L0002376 , L0002377 , L0002378 ,

L0002379 , L0002380 , L0002381 , L0002382 ,
L0002383 , L0002384 , L0002385 , L0002386 ,

*** MODELOPTs: RegDFAULT CONC ELEV URBAN ADJ_U*

*** SOURCE IDs DEFINING SOURCE GROUPS
***

SRCGROUP ID	SOURCE IDs
	L0002387 , L0002388 , L0002389 , L0002390 , L0002391 , L0002392 , L0002393 , L0002394 ,
	L0002395 , L0002396 , L0002397 , L0002398 , L0002399 , L0002400 , L0002401 , L0002402 ,
	L0002403 , L0002404 , L0002405 , L0002406 , L0002407 ,
ALL	L0001804 , L0001805 , L0001806 , L0001807 , L0001808 , L0001809 , L0001810 , L0001811 ,
	L0001812 , L0001813 , L0001814 , L0001815 , L0001816 , L0001817 , L0001818 , L0001819 ,
	L0001820 , L0001821 , L0001822 , L0001823 , L0001824 , L0001825 , L0001826 , L0001827 ,
	L0001828 , L0001829 , L0001830 , L0001831 , L0001832 , L0001833 , L0001834 , L0001835 ,
	L0001836 , L0001837 , L0001838 , L0001839 , L0001840 , L0001841 , L0001842 , L0001843 ,
	L0001844 , JS , FES , EG , STT , ABWQL , PS , L0001845 ,
	L0001846 , L0001847 , L0001848 , L0001849 , L0001850 , L0001851 , L0001852 , L0001853 ,
	L0001854 , L0001855 , L0001856 , L0001857 , L0001858 , L0001859 , L0001860 , L0001861 ,
	L0001862 , L0001863 , L0001864 , L0001865 , L0001866 , L0001867 , L0001868 , L0001869 ,
	L0001870 , L0001871 , L0001872 , L0001873 , L0001874 , L0001875 , L0001876 , L0001877 ,
	L0001878 , L0001879 , L0001880 , L0001881 , L0001882 , L0001883 , L0001884 , L0001885 ,
	L0001886 , L0001887 , L0001888 , L0001889 ,

L0001890 , L0001891 , L0001892 , L0001893 ,

L0001894 , L0001895 , L0001896 , L0001897 ,
L0001898 , L0001899 , L0001900 , L0001901 ,

L0001902 , L0001903 , L0001904 , L0001905 ,
L0001906 , L0001907 , L0001908 , L0001909 ,

L0001910 , L0001911 , L0001912 , L0001913 ,
L0001914 , L0001915 , L0001916 , L0001917 ,

L0001918 , L0001919 , L0001920 , L0001921 ,
L0001922 , L0001923 , L0001924 , L0001925 ,

L0001926 , L0001927 , L0001928 , L0001929 ,
L0001930 , L0001931 , L0001932 , L0001933 ,

*** MODELOPTs: RegDFAULT CONC ELEV URBAN ADJ_U*

*** SOURCE IDs DEFINING SOURCE GROUPS
***

SRCGROUP ID	SOURCE IDs
	L0001934 , L0001935 , L0001936 , L0001937 , L0001938 , L0001939 , L0001940 , L0001941 ,
	L0001942 , L0001943 , L0001944 , L0001945 , L0001946 , L0001947 , L0001948 , L0001949 ,
	L0001950 , L0001951 , L0001952 , L0001953 , L0001954 , L0001955 , L0001956 , L0001957 ,
	L0001958 , L0001959 , L0001960 , L0001961 , L0001962 , L0001963 , L0001964 , L0001965 ,
	L0001966 , L0001967 , L0001968 , L0001969 , L0001970 , L0001971 , L0001972 , L0001973 ,
	L0001974 , L0001975 , L0001976 , L0001977 , L0001978 , L0001979 , L0001980 , L0001981 ,
	L0001982 , L0001983 , L0001984 , L0001985 , L0001986 , L0001987 , L0001988 , L0001989 ,
	L0001990 , L0001991 , L0001992 , L0001993 , L0001994 , L0001995 , L0001996 , L0001997 ,
	L0001998 , L0001999 , L0002000 , L0002001 , L0002002 , L0002003 , L0002004 , L0002005 ,
	L0002006 , L0002007 , L0002008 , L0002009 , L0002010 , L0002011 , L0002012 , L0002013 ,
	L0002014 , L0002015 , L0002016 , L0002017 , L0002018 , L0002019 , L0002020 , L0002021 ,
	L0002022 , L0002023 , L0002024 , L0002025 , L0002026 , L0002027 , L0002028 , L0002029 ,
	L0002030 , L0002031 , L0002032 , L0002033 , L0002034 , L0002035 , L0002036 , L0002037 ,
	L0002038 , L0002039 , L0002040 , L0002041 , L0002042 , L0002043 , L0002044 , L0002045 ,
	L0002046 , L0002047 , L0002048 , L0002049 ,

L0002050 , L0002051 , L0002052 , L0002053 ,

L0002054 , L0002055 , L0002056 , L0002057 ,
L0002058 , L0002059 , L0002060 , L0002061 ,

L0002062 , L0002063 , L0002064 , L0002065 ,
L0002066 , L0002067 , L0002068 , L0002069 ,

L0002070 , L0002071 , L0002072 , L0002073 ,
L0002074 , L0002075 , L0002076 , L0002077 ,

L0002078 , L0002079 , L0002080 , L0002081 ,
L0002082 , L0002083 , L0002084 , L0002085 ,

L0002086 , L0003711 , L0003712 , L0003713 ,
L0003714 , L0003715 , L0003716 , L0003717 ,

*** MODELOPTs: RegDFAULT CONC ELEV URBAN ADJ_U*

*** SOURCE IDs DEFINING SOURCE GROUPS
***

SRCGROUP ID	SOURCE IDs
	L0003718 , L0003719 , L0003720 , L0003721 , L0003722 , L0003723 , L0003724 , L0003725 ,
	L0003726 , L0003727 , L0003728 , L0003729 , L0003730 , L0003731 , L0003732 , L0003733 ,
	L0003734 , L0003735 , L0003736 , L0003737 , L0003738 , L0003739 , L0003740 , L0003741 ,
	L0003742 , L0003743 , L0003744 , L0003745 , L0003746 , L0003747 , L0003748 , L0003749 ,
	L0003750 , L0003751 , L0003752 , L0003753 , L0003754 , L0003755 , L0003756 , L0003757 ,
	L0003758 , L0003759 , L0003760 , L0003761 , L0003762 , L0003763 , L0003764 , L0003765 ,
	L0003766 , L0003767 , L0003768 , L0002339 , L0002340 , L0002341 , L0002342 , L0002343 ,
	L0002344 , L0002345 , L0002346 , L0002347 , L0002348 , L0002349 , L0002350 , L0002351 ,
	L0002352 , L0002353 , L0002354 , L0002355 , L0002356 , L0002357 , L0002358 , L0002359 ,
	L0002360 , L0002361 , L0002362 , L0002363 , L0002364 , L0002365 , L0002366 , L0002367 ,
	L0002368 , L0002369 , L0002370 , L0002371 , L0002372 , L0002373 , L0002374 , L0002375 ,
	L0002376 , L0002377 , L0002378 , L0002379 , L0002380 , L0002381 , L0002382 , L0002383 ,
	L0002384 , L0002385 , L0002386 , L0002387 , L0002388 , L0002389 , L0002390 , L0002391 ,
	L0002392 , L0002393 , L0002394 , L0002395 , L0002396 , L0002397 , L0002398 , L0002399 ,
	L0002400 , L0002401 , L0002402 , L0002403 ,

L0002404 , L0002405 , L0002406 , L0002407 ,

*** MODELOPTs: RegDFAULT CONC ELEV URBAN ADJ_U*

*** SOURCE IDs DEFINED AS URBAN SOURCES
***

URBAN ID	URBAN POP	SOURCE IDs
	9818605.	L0001804 , L0001805 , L0001806 , L0001807 , L0001808 , L0001809 , L0001810 , L0001811 ,
		L0001812 , L0001813 , L0001814 , L0001815 , L0001816 , L0001817 , L0001818 , L0001819 ,
		L0001820 , L0001821 , L0001822 , L0001823 , L0001824 , L0001825 , L0001826 , L0001827 ,
		L0001828 , L0001829 , L0001830 , L0001831 , L0001832 , L0001833 , L0001834 , L0001835 ,
		L0001836 , L0001837 , L0001838 , L0001839 , L0001840 , L0001841 , L0001842 , L0001843 ,
		L0001844 , JS , FES , EG , STT , ABWQL , PS , L0001845 ,
		L0001846 , L0001847 , L0001848 , L0001849 , L0001850 , L0001851 , L0001852 , L0001853 ,
		L0001854 , L0001855 , L0001856 , L0001857 , L0001858 , L0001859 , L0001860 , L0001861 ,
		L0001862 , L0001863 , L0001864 , L0001865 , L0001866 , L0001867 , L0001868 , L0001869 ,
		L0001870 , L0001871 , L0001872 , L0001873 , L0001874 , L0001875 , L0001876 , L0001877 ,
		L0001878 , L0001879 , L0001880 , L0001881 , L0001882 , L0001883 , L0001884 , L0001885 ,
		L0001886 , L0001887 , L0001888 , L0001889 , L0001890 , L0001891 , L0001892 , L0001893 ,
		L0001894 , L0001895 , L0001896 , L0001897 , L0001898 , L0001899 , L0001900 , L0001901 ,
		L0001902 , L0001903 , L0001904 , L0001905 , L0001906 , L0001907 , L0001908 , L0001909 ,

L0001910 , L0001911 , L0001912 , L0001913 ,
L0001914 , L0001915 , L0001916 , L0001917 ,

L0001918 , L0001919 , L0001920 , L0001921 ,
L0001922 , L0001923 , L0001924 , L0001925 ,

L0001926 , L0001927 , L0001928 , L0001929 ,
L0001930 , L0001931 , L0001932 , L0001933 ,

L0001934 , L0001935 , L0001936 , L0001937 ,
L0001938 , L0001939 , L0001940 , L0001941 ,

L0001942 , L0001943 , L0001944 , L0001945 ,
L0001946 , L0001947 , L0001948 , L0001949 ,

L0001950 , L0001951 , L0001952 , L0001953 ,
L0001954 , L0001955 , L0001956 , L0001957 ,

*** MODELOPTs: RegDFAULT CONC ELEV URBAN ADJ_U*

*** SOURCE IDs DEFINED AS URBAN SOURCES
***

URBAN ID	URBAN POP	SOURCE IDs
		L0001958 , L0001959 , L0001960 , L0001961 , L0001962 , L0001963 , L0001964 , L0001965 ,
		L0001966 , L0001967 , L0001968 , L0001969 , L0001970 , L0001971 , L0001972 , L0001973 ,
		L0001974 , L0001975 , L0001976 , L0001977 , L0001978 , L0001979 , L0001980 , L0001981 ,
		L0001982 , L0001983 , L0001984 , L0001985 , L0001986 , L0001987 , L0001988 , L0001989 ,
		L0001990 , L0001991 , L0001992 , L0001993 , L0001994 , L0001995 , L0001996 , L0001997 ,
		L0001998 , L0001999 , L0002000 , L0002001 , L0002002 , L0002003 , L0002004 , L0002005 ,
		L0002006 , L0002007 , L0002008 , L0002009 , L0002010 , L0002011 , L0002012 , L0002013 ,
		L0002014 , L0002015 , L0002016 , L0002017 , L0002018 , L0002019 , L0002020 , L0002021 ,
		L0002022 , L0002023 , L0002024 , L0002025 , L0002026 , L0002027 , L0002028 , L0002029 ,
		L0002030 , L0002031 , L0002032 , L0002033 , L0002034 , L0002035 , L0002036 , L0002037 ,
		L0002038 , L0002039 , L0002040 , L0002041 , L0002042 , L0002043 , L0002044 , L0002045 ,
		L0002046 , L0002047 , L0002048 , L0002049 , L0002050 , L0002051 , L0002052 , L0002053 ,
		L0002054 , L0002055 , L0002056 , L0002057 , L0002058 , L0002059 , L0002060 , L0002061 ,
		L0002062 , L0002063 , L0002064 , L0002065 , L0002066 , L0002067 , L0002068 , L0002069 ,
		L0002070 , L0002071 , L0002072 , L0002073 ,

L0002074 , L0002075 , L0002076 , L0002077 ,

L0002078 , L0002079 , L0002080 , L0002081 ,
L0002082 , L0002083 , L0002084 , L0002085 ,

L0002086 , L0003711 , L0003712 , L0003713 ,
L0003714 , L0003715 , L0003716 , L0003717 ,

L0003718 , L0003719 , L0003720 , L0003721 ,
L0003722 , L0003723 , L0003724 , L0003725 ,

L0003726 , L0003727 , L0003728 , L0003729 ,
L0003730 , L0003731 , L0003732 , L0003733 ,

L0003734 , L0003735 , L0003736 , L0003737 ,
L0003738 , L0003739 , L0003740 , L0003741 ,

*** MODELOPTs: RegDFAULT CONC ELEV URBAN ADJ_U*

*** SOURCE IDs DEFINED AS URBAN SOURCES
***

URBAN ID	URBAN POP	SOURCE IDs

L0003742 , L0003743 , L0003744 , L0003745 ,
L0003746 , L0003747 , L0003748 , L0003749 ,

L0003750 , L0003751 , L0003752 , L0003753 ,
L0003754 , L0003755 , L0003756 , L0003757 ,

L0003758 , L0003759 , L0003760 , L0003761 ,
L0003762 , L0003763 , L0003764 , L0003765 ,

L0003766 , L0003767 , L0003768 , L0002339 ,
L0002340 , L0002341 , L0002342 , L0002343 ,

L0002344 , L0002345 , L0002346 , L0002347 ,
L0002348 , L0002349 , L0002350 , L0002351 ,

L0002352 , L0002353 , L0002354 , L0002355 ,
L0002356 , L0002357 , L0002358 , L0002359 ,

L0002360 , L0002361 , L0002362 , L0002363 ,
L0002364 , L0002365 , L0002366 , L0002367 ,

L0002368 , L0002369 , L0002370 , L0002371 ,
L0002372 , L0002373 , L0002374 , L0002375 ,

L0002376 , L0002377 , L0002378 , L0002379 ,
L0002380 , L0002381 , L0002382 , L0002383 ,

L0002384 , L0002385 , L0002386 , L0002387 ,
L0002388 , L0002389 , L0002390 , L0002391 ,

L0002392 , L0002393 , L0002394 , L0002395 ,
L0002396 , L0002397 , L0002398 , L0002399 ,

L0002400 , L0002401 , L0002402 , L0002403 ,
L0002404 , L0002405 , L0002406 , L0002407 ,

```
 *** AERMOD - VERSION 22112  ***   *** C:\Lakes\Project Files\Garvey\Garvey.isc
***        03/04/24
 *** AERMET - VERSION  16216 ***   ***
***        13:00:54

PAGE  22
 *** MODELOPTs:    RegDFAULT  CONC  ELEV  URBAN  ADJ_U*

                   * SOURCE EMISSION RATE SCALARS WHICH VARY DIURNALLY AND BY DAY
OF WEEK (HRDOW) *

 SOURCE ID = L0001804     ; SOURCE TYPE = VOLUME   :
  HOUR   SCALAR   HOUR   SCALAR   HOUR   SCALAR   HOUR   SCALAR   HOUR   SCALAR
HOUR   SCALAR   HOUR   SCALAR   HOUR   SCALAR
 - - - - - - - - - - - - - - - - - - - - - - - - - - - - - - - - - - - - - - - -
- - - - - - - - - - - - - - - - - - - - - - - - - -
                                                DAY OF WEEK = WEEKDAY
    1  .0000E+00    2  .0000E+00    3  .0000E+00    4  .0000E+00    5  .0000E+00
6  .0000E+00    7  .1000E+01    8  .1000E+01
    9  .1000E+01   10  .1000E+01   11  .1000E+01   12  .1000E+01   13  .1000E+01
14  .1000E+01   15  .1000E+01   16  .1000E+01
   17  .0000E+00   18  .0000E+00   19  .0000E+00   20  .0000E+00   21  .0000E+00
22  .0000E+00   23  .0000E+00   24  .0000E+00
                                                DAY OF WEEK = SATURDAY
    1  .0000E+00    2  .0000E+00    3  .0000E+00    4  .0000E+00    5  .0000E+00
6  .0000E+00    7  .0000E+00    8  .0000E+00
    9  .0000E+00   10  .0000E+00   11  .0000E+00   12  .0000E+00   13  .0000E+00
14  .0000E+00   15  .0000E+00   16  .0000E+00
   17  .0000E+00   18  .0000E+00   19  .0000E+00   20  .0000E+00   21  .0000E+00
22  .0000E+00   23  .0000E+00   24  .0000E+00
                                                DAY OF WEEK = SUNDAY
    1  .0000E+00    2  .0000E+00    3  .0000E+00    4  .0000E+00    5  .0000E+00
6  .0000E+00    7  .0000E+00    8  .0000E+00
    9  .0000E+00   10  .0000E+00   11  .0000E+00   12  .0000E+00   13  .0000E+00
14  .0000E+00   15  .0000E+00   16  .0000E+00
   17  .0000E+00   18  .0000E+00   19  .0000E+00   20  .0000E+00   21  .0000E+00
22  .0000E+00   23  .0000E+00   24  .0000E+00
```

*** MODELOPTs: RegDFAULT CONC ELEV URBAN ADJ_U*

* SOURCE EMISSION RATE SCALARS WHICH VARY DIURNALLY AND BY DAY OF WEEK (HRDOW) *

SOURCE ID = L0001805 ; SOURCE TYPE = VOLUME :

```
  HOUR   SCALAR   HOUR   SCALAR   HOUR   SCALAR   HOUR   SCALAR   HOUR   SCALAR
HOUR   SCALAR   HOUR   SCALAR   HOUR   SCALAR
 - - - - - - - - - - - - - - - - - - - - - - - - - - - - - - - - - - - - - - - - -
- - - - - - - - - - - - - - - - - - - - - - - - - -
                                                DAY OF WEEK = WEEKDAY
    1  .0000E+00    2  .0000E+00    3  .0000E+00    4  .0000E+00    5  .0000E+00
6  .0000E+00    7  .1000E+01    8  .1000E+01
    9  .1000E+01   10  .1000E+01   11  .1000E+01   12  .1000E+01   13  .1000E+01
14  .1000E+01   15  .1000E+01   16  .1000E+01
   17  .0000E+00   18  .0000E+00   19  .0000E+00   20  .0000E+00   21  .0000E+00
22  .0000E+00   23  .0000E+00   24  .0000E+00
                                                DAY OF WEEK = SATURDAY
    1  .0000E+00    2  .0000E+00    3  .0000E+00    4  .0000E+00    5  .0000E+00
6  .0000E+00    7  .0000E+00    8  .0000E+00
    9  .0000E+00   10  .0000E+00   11  .0000E+00   12  .0000E+00   13  .0000E+00
14  .0000E+00   15  .0000E+00   16  .0000E+00
   17  .0000E+00   18  .0000E+00   19  .0000E+00   20  .0000E+00   21  .0000E+00
22  .0000E+00   23  .0000E+00   24  .0000E+00
                                                DAY OF WEEK = SUNDAY
    1  .0000E+00    2  .0000E+00    3  .0000E+00    4  .0000E+00    5  .0000E+00
6  .0000E+00    7  .0000E+00    8  .0000E+00
    9  .0000E+00   10  .0000E+00   11  .0000E+00   12  .0000E+00   13  .0000E+00
14  .0000E+00   15  .0000E+00   16  .0000E+00
   17  .0000E+00   18  .0000E+00   19  .0000E+00   20  .0000E+00   21  .0000E+00
22  .0000E+00   23  .0000E+00   24  .0000E+00
```

```
 *** AERMOD - VERSION 22112  ***   *** C:\Lakes\Project Files\Garvey\Garvey.isc
***        03/04/24
 *** AERMET - VERSION  16216 ***   ***
***        13:00:54

PAGE  24
 *** MODELOPTs:    RegDFAULT  CONC  ELEV  URBAN  ADJ_U*

                   * SOURCE EMISSION RATE SCALARS WHICH VARY DIURNALLY AND BY DAY
OF WEEK (HRDOW) *

 SOURCE ID = L0001806     ; SOURCE TYPE = VOLUME   :
  HOUR   SCALAR   HOUR   SCALAR   HOUR   SCALAR   HOUR   SCALAR   HOUR   SCALAR
HOUR   SCALAR   HOUR   SCALAR   HOUR   SCALAR
 - - - - - - - - - - - - - - - - - - - - - - - - - - - - - - - - - - - - - - - -
- - - - - - - - - - - - - - - - - - - - - - - - -
                                                DAY OF WEEK = WEEKDAY
    1  .0000E+00    2  .0000E+00    3  .0000E+00    4  .0000E+00    5  .0000E+00
6  .0000E+00    7  .1000E+01    8  .1000E+01
    9  .1000E+01   10  .1000E+01   11  .1000E+01   12  .1000E+01   13  .1000E+01
14  .1000E+01   15  .1000E+01   16  .1000E+01
   17  .0000E+00   18  .0000E+00   19  .0000E+00   20  .0000E+00   21  .0000E+00
22  .0000E+00   23  .0000E+00   24  .0000E+00
                                                DAY OF WEEK = SATURDAY
    1  .0000E+00    2  .0000E+00    3  .0000E+00    4  .0000E+00    5  .0000E+00
6  .0000E+00    7  .0000E+00    8  .0000E+00
    9  .0000E+00   10  .0000E+00   11  .0000E+00   12  .0000E+00   13  .0000E+00
14  .0000E+00   15  .0000E+00   16  .0000E+00
   17  .0000E+00   18  .0000E+00   19  .0000E+00   20  .0000E+00   21  .0000E+00
22  .0000E+00   23  .0000E+00   24  .0000E+00
                                                DAY OF WEEK = SUNDAY
    1  .0000E+00    2  .0000E+00    3  .0000E+00    4  .0000E+00    5  .0000E+00
6  .0000E+00    7  .0000E+00    8  .0000E+00
    9  .0000E+00   10  .0000E+00   11  .0000E+00   12  .0000E+00   13  .0000E+00
14  .0000E+00   15  .0000E+00   16  .0000E+00
   17  .0000E+00   18  .0000E+00   19  .0000E+00   20  .0000E+00   21  .0000E+00
22  .0000E+00   23  .0000E+00   24  .0000E+00
```

```
 *** AERMOD - VERSION 22112  ***   *** C:\Lakes\Project Files\Garvey\Garvey.isc
***        03/04/24
 *** AERMET - VERSION  16216 ***   ***
***        13:00:54

PAGE  25
 *** MODELOPTs:    RegDFAULT  CONC  ELEV  URBAN  ADJ_U*

                   * SOURCE EMISSION RATE SCALARS WHICH VARY DIURNALLY AND BY DAY
OF WEEK (HRDOW) *

 SOURCE ID = L0001807     ; SOURCE TYPE = VOLUME   :
  HOUR   SCALAR   HOUR   SCALAR   HOUR   SCALAR   HOUR   SCALAR   HOUR   SCALAR
HOUR   SCALAR   HOUR   SCALAR   HOUR   SCALAR
 - - - - - - - - - - - - - - - - - - - - - - - - - - - - - - - - - - - - - - - -
- - - - - - - - - - - - - - - - - - - - - - - - -
                                                DAY OF WEEK = WEEKDAY
    1  .0000E+00    2  .0000E+00    3  .0000E+00    4  .0000E+00    5  .0000E+00
6  .0000E+00    7  .1000E+01    8  .1000E+01
    9  .1000E+01   10  .1000E+01   11  .1000E+01   12  .1000E+01   13  .1000E+01
14  .1000E+01   15  .1000E+01   16  .1000E+01
   17  .0000E+00   18  .0000E+00   19  .0000E+00   20  .0000E+00   21  .0000E+00
22  .0000E+00   23  .0000E+00   24  .0000E+00
                                                DAY OF WEEK = SATURDAY
    1  .0000E+00    2  .0000E+00    3  .0000E+00    4  .0000E+00    5  .0000E+00
6  .0000E+00    7  .0000E+00    8  .0000E+00
    9  .0000E+00   10  .0000E+00   11  .0000E+00   12  .0000E+00   13  .0000E+00
14  .0000E+00   15  .0000E+00   16  .0000E+00
   17  .0000E+00   18  .0000E+00   19  .0000E+00   20  .0000E+00   21  .0000E+00
22  .0000E+00   23  .0000E+00   24  .0000E+00
                                                DAY OF WEEK = SUNDAY
    1  .0000E+00    2  .0000E+00    3  .0000E+00    4  .0000E+00    5  .0000E+00
6  .0000E+00    7  .0000E+00    8  .0000E+00
    9  .0000E+00   10  .0000E+00   11  .0000E+00   12  .0000E+00   13  .0000E+00
14  .0000E+00   15  .0000E+00   16  .0000E+00
   17  .0000E+00   18  .0000E+00   19  .0000E+00   20  .0000E+00   21  .0000E+00
22  .0000E+00   23  .0000E+00   24  .0000E+00
```

```
 *** AERMOD - VERSION 22112  ***   *** C:\Lakes\Project Files\Garvey\Garvey.isc
***        03/04/24
 *** AERMET - VERSION  16216 ***   ***
***        13:00:54

PAGE  26
 *** MODELOPTs:    RegDFAULT  CONC  ELEV  URBAN  ADJ_U*

                   * SOURCE EMISSION RATE SCALARS WHICH VARY DIURNALLY AND BY DAY
OF WEEK (HRDOW) *

 SOURCE ID = L0001808     ; SOURCE TYPE = VOLUME   :
  HOUR   SCALAR   HOUR   SCALAR   HOUR   SCALAR   HOUR   SCALAR   HOUR   SCALAR
HOUR   SCALAR   HOUR   SCALAR   HOUR   SCALAR
 - - - - - - - - - - - - - - - - - - - - - - - - - - - - - - - - - - - - - - - -
- - - - - - - - - - - - - - - - - - - - - - - - - -
                                                DAY OF WEEK = WEEKDAY
    1  .0000E+00    2  .0000E+00    3  .0000E+00    4  .0000E+00    5  .0000E+00
6  .0000E+00    7  .1000E+01    8  .1000E+01
    9  .1000E+01   10  .1000E+01   11  .1000E+01   12  .1000E+01   13  .1000E+01
14  .1000E+01   15  .1000E+01   16  .1000E+01
   17  .0000E+00   18  .0000E+00   19  .0000E+00   20  .0000E+00   21  .0000E+00
22  .0000E+00   23  .0000E+00   24  .0000E+00
                                                DAY OF WEEK = SATURDAY
    1  .0000E+00    2  .0000E+00    3  .0000E+00    4  .0000E+00    5  .0000E+00
6  .0000E+00    7  .0000E+00    8  .0000E+00
    9  .0000E+00   10  .0000E+00   11  .0000E+00   12  .0000E+00   13  .0000E+00
14  .0000E+00   15  .0000E+00   16  .0000E+00
   17  .0000E+00   18  .0000E+00   19  .0000E+00   20  .0000E+00   21  .0000E+00
22  .0000E+00   23  .0000E+00   24  .0000E+00
                                                DAY OF WEEK = SUNDAY
    1  .0000E+00    2  .0000E+00    3  .0000E+00    4  .0000E+00    5  .0000E+00
6  .0000E+00    7  .0000E+00    8  .0000E+00
    9  .0000E+00   10  .0000E+00   11  .0000E+00   12  .0000E+00   13  .0000E+00
14  .0000E+00   15  .0000E+00   16  .0000E+00
   17  .0000E+00   18  .0000E+00   19  .0000E+00   20  .0000E+00   21  .0000E+00
22  .0000E+00   23  .0000E+00   24  .0000E+00
```

```
 *** AERMOD - VERSION 22112  ***   *** C:\Lakes\Project Files\Garvey\Garvey.isc
***        03/04/24
 *** AERMET - VERSION  16216 ***   ***
***        13:00:54

PAGE  27
 *** MODELOPTs:    RegDFAULT  CONC  ELEV  URBAN  ADJ_U*

                   * SOURCE EMISSION RATE SCALARS WHICH VARY DIURNALLY AND BY DAY
OF WEEK (HRDOW) *

 SOURCE ID = L0001809     ; SOURCE TYPE = VOLUME   :
  HOUR   SCALAR   HOUR   SCALAR   HOUR   SCALAR   HOUR   SCALAR   HOUR   SCALAR
HOUR   SCALAR   HOUR   SCALAR   HOUR   SCALAR
 - - - - - - - - - - - - - - - - - - - - - - - - - - - - - - - - - - - - - - - -
- - - - - - - - - - - - - - - - - - - - - - - - - -
                                                DAY OF WEEK = WEEKDAY
    1  .0000E+00    2  .0000E+00    3  .0000E+00    4  .0000E+00    5  .0000E+00
6  .0000E+00    7  .1000E+01    8  .1000E+01
    9  .1000E+01   10  .1000E+01   11  .1000E+01   12  .1000E+01   13  .1000E+01
14  .1000E+01   15  .1000E+01   16  .1000E+01
   17  .0000E+00   18  .0000E+00   19  .0000E+00   20  .0000E+00   21  .0000E+00
22  .0000E+00   23  .0000E+00   24  .0000E+00
                                                DAY OF WEEK = SATURDAY
    1  .0000E+00    2  .0000E+00    3  .0000E+00    4  .0000E+00    5  .0000E+00
6  .0000E+00    7  .0000E+00    8  .0000E+00
    9  .0000E+00   10  .0000E+00   11  .0000E+00   12  .0000E+00   13  .0000E+00
14  .0000E+00   15  .0000E+00   16  .0000E+00
   17  .0000E+00   18  .0000E+00   19  .0000E+00   20  .0000E+00   21  .0000E+00
22  .0000E+00   23  .0000E+00   24  .0000E+00
                                                DAY OF WEEK = SUNDAY
    1  .0000E+00    2  .0000E+00    3  .0000E+00    4  .0000E+00    5  .0000E+00
6  .0000E+00    7  .0000E+00    8  .0000E+00
    9  .0000E+00   10  .0000E+00   11  .0000E+00   12  .0000E+00   13  .0000E+00
14  .0000E+00   15  .0000E+00   16  .0000E+00
   17  .0000E+00   18  .0000E+00   19  .0000E+00   20  .0000E+00   21  .0000E+00
22  .0000E+00   23  .0000E+00   24  .0000E+00
```

```
 *** AERMOD - VERSION 22112  ***   *** C:\Lakes\Project Files\Garvey\Garvey.isc
***        03/04/24
 *** AERMET - VERSION  16216 ***   ***
***        13:00:54

PAGE  28
 *** MODELOPTs:    RegDFAULT  CONC  ELEV  URBAN  ADJ_U*

                   * SOURCE EMISSION RATE SCALARS WHICH VARY DIURNALLY AND BY DAY
OF WEEK (HRDOW) *

 SOURCE ID = L0001810     ; SOURCE TYPE = VOLUME   :
  HOUR   SCALAR   HOUR   SCALAR   HOUR   SCALAR   HOUR   SCALAR   HOUR   SCALAR
HOUR   SCALAR   HOUR   SCALAR   HOUR   SCALAR
 - - - - - - - - - - - - - - - - - - - - - - - - - - - - - - - - - - - - - - - -
- - - - - - - - - - - - - - - - - - - - - - - - -
                                                DAY OF WEEK = WEEKDAY
    1  .0000E+00    2  .0000E+00    3  .0000E+00    4  .0000E+00    5  .0000E+00
6  .0000E+00    7  .1000E+01    8  .1000E+01
    9  .1000E+01   10  .1000E+01   11  .1000E+01   12  .1000E+01   13  .1000E+01
14  .1000E+01   15  .1000E+01   16  .1000E+01
   17  .0000E+00   18  .0000E+00   19  .0000E+00   20  .0000E+00   21  .0000E+00
22  .0000E+00   23  .0000E+00   24  .0000E+00
                                                DAY OF WEEK = SATURDAY
    1  .0000E+00    2  .0000E+00    3  .0000E+00    4  .0000E+00    5  .0000E+00
6  .0000E+00    7  .0000E+00    8  .0000E+00
    9  .0000E+00   10  .0000E+00   11  .0000E+00   12  .0000E+00   13  .0000E+00
14  .0000E+00   15  .0000E+00   16  .0000E+00
   17  .0000E+00   18  .0000E+00   19  .0000E+00   20  .0000E+00   21  .0000E+00
22  .0000E+00   23  .0000E+00   24  .0000E+00
                                                DAY OF WEEK = SUNDAY
    1  .0000E+00    2  .0000E+00    3  .0000E+00    4  .0000E+00    5  .0000E+00
6  .0000E+00    7  .0000E+00    8  .0000E+00
    9  .0000E+00   10  .0000E+00   11  .0000E+00   12  .0000E+00   13  .0000E+00
14  .0000E+00   15  .0000E+00   16  .0000E+00
   17  .0000E+00   18  .0000E+00   19  .0000E+00   20  .0000E+00   21  .0000E+00
22  .0000E+00   23  .0000E+00   24  .0000E+00
```

```
 *** AERMOD - VERSION 22112  ***   *** C:\Lakes\Project Files\Garvey\Garvey.isc
***        03/04/24
 *** AERMET - VERSION  16216 ***   ***
***        13:00:54

PAGE  29
 *** MODELOPTs:    RegDFAULT  CONC  ELEV  URBAN  ADJ_U*

                   * SOURCE EMISSION RATE SCALARS WHICH VARY DIURNALLY AND BY DAY
OF WEEK (HRDOW) *

 SOURCE ID = L0001811     ; SOURCE TYPE = VOLUME   :
  HOUR   SCALAR   HOUR   SCALAR   HOUR   SCALAR   HOUR   SCALAR   HOUR   SCALAR
HOUR   SCALAR   HOUR   SCALAR   HOUR   SCALAR
 - - - - - - - - - - - - - - - - - - - - - - - - - - - - - - - - - - - - - - - -
- - - - - - - - - - - - - - - - - - - - - - - - - -
                                                DAY OF WEEK = WEEKDAY
    1  .0000E+00    2  .0000E+00    3  .0000E+00    4  .0000E+00    5  .0000E+00
6  .0000E+00    7  .1000E+01    8  .1000E+01
    9  .1000E+01   10  .1000E+01   11  .1000E+01   12  .1000E+01   13  .1000E+01
14  .1000E+01   15  .1000E+01   16  .1000E+01
   17  .0000E+00   18  .0000E+00   19  .0000E+00   20  .0000E+00   21  .0000E+00
22  .0000E+00   23  .0000E+00   24  .0000E+00
                                                DAY OF WEEK = SATURDAY
    1  .0000E+00    2  .0000E+00    3  .0000E+00    4  .0000E+00    5  .0000E+00
6  .0000E+00    7  .0000E+00    8  .0000E+00
    9  .0000E+00   10  .0000E+00   11  .0000E+00   12  .0000E+00   13  .0000E+00
14  .0000E+00   15  .0000E+00   16  .0000E+00
   17  .0000E+00   18  .0000E+00   19  .0000E+00   20  .0000E+00   21  .0000E+00
22  .0000E+00   23  .0000E+00   24  .0000E+00
                                                DAY OF WEEK = SUNDAY
    1  .0000E+00    2  .0000E+00    3  .0000E+00    4  .0000E+00    5  .0000E+00
6  .0000E+00    7  .0000E+00    8  .0000E+00
    9  .0000E+00   10  .0000E+00   11  .0000E+00   12  .0000E+00   13  .0000E+00
14  .0000E+00   15  .0000E+00   16  .0000E+00
   17  .0000E+00   18  .0000E+00   19  .0000E+00   20  .0000E+00   21  .0000E+00
22  .0000E+00   23  .0000E+00   24  .0000E+00
```

```
 *** AERMOD - VERSION 22112  ***   *** C:\Lakes\Project Files\Garvey\Garvey.isc
***        03/04/24
 *** AERMET - VERSION  16216 ***   ***
***        13:00:54

PAGE  30
 *** MODELOPTs:    RegDFAULT  CONC  ELEV  URBAN  ADJ_U*

                   * SOURCE EMISSION RATE SCALARS WHICH VARY DIURNALLY AND BY DAY
OF WEEK (HRDOW) *

 SOURCE ID = L0001812     ; SOURCE TYPE = VOLUME   :
  HOUR   SCALAR   HOUR   SCALAR   HOUR   SCALAR   HOUR   SCALAR   HOUR   SCALAR
HOUR   SCALAR   HOUR   SCALAR   HOUR   SCALAR
 - - - - - - - - - - - - - - - - - - - - - - - - - - - - - - - - - - - - - - - -
- - - - - - - - - - - - - - - - - - - - - - - - - -
                                                DAY OF WEEK = WEEKDAY
    1  .0000E+00    2  .0000E+00    3  .0000E+00    4  .0000E+00    5  .0000E+00
6  .0000E+00    7  .1000E+01    8  .1000E+01
    9  .1000E+01   10  .1000E+01   11  .1000E+01   12  .1000E+01   13  .1000E+01
14  .1000E+01   15  .1000E+01   16  .1000E+01
   17  .0000E+00   18  .0000E+00   19  .0000E+00   20  .0000E+00   21  .0000E+00
22  .0000E+00   23  .0000E+00   24  .0000E+00
                                                DAY OF WEEK = SATURDAY
    1  .0000E+00    2  .0000E+00    3  .0000E+00    4  .0000E+00    5  .0000E+00
6  .0000E+00    7  .0000E+00    8  .0000E+00
    9  .0000E+00   10  .0000E+00   11  .0000E+00   12  .0000E+00   13  .0000E+00
14  .0000E+00   15  .0000E+00   16  .0000E+00
   17  .0000E+00   18  .0000E+00   19  .0000E+00   20  .0000E+00   21  .0000E+00
22  .0000E+00   23  .0000E+00   24  .0000E+00
                                                DAY OF WEEK = SUNDAY
    1  .0000E+00    2  .0000E+00    3  .0000E+00    4  .0000E+00    5  .0000E+00
6  .0000E+00    7  .0000E+00    8  .0000E+00
    9  .0000E+00   10  .0000E+00   11  .0000E+00   12  .0000E+00   13  .0000E+00
14  .0000E+00   15  .0000E+00   16  .0000E+00
   17  .0000E+00   18  .0000E+00   19  .0000E+00   20  .0000E+00   21  .0000E+00
22  .0000E+00   23  .0000E+00   24  .0000E+00
```

```
 *** AERMOD - VERSION 22112  ***   *** C:\Lakes\Project Files\Garvey\Garvey.isc
***        03/04/24
 *** AERMET - VERSION  16216 ***   ***
***        13:00:54

PAGE  31
 *** MODELOPTs:    RegDFAULT  CONC  ELEV  URBAN  ADJ_U*

                   * SOURCE EMISSION RATE SCALARS WHICH VARY DIURNALLY AND BY DAY
OF WEEK (HRDOW) *

 SOURCE ID = L0001813     ; SOURCE TYPE = VOLUME   :
  HOUR   SCALAR   HOUR   SCALAR   HOUR   SCALAR   HOUR   SCALAR   HOUR   SCALAR
HOUR   SCALAR   HOUR   SCALAR   HOUR   SCALAR
 - - - - - - - - - - - - - - - - - - - - - - - - - - - - - - - - - - - - - - - -
- - - - - - - - - - - - - - - - - - - - - - - - -
                                                DAY OF WEEK = WEEKDAY
    1  .0000E+00    2  .0000E+00    3  .0000E+00    4  .0000E+00    5  .0000E+00
6  .0000E+00    7  .1000E+01    8  .1000E+01
    9  .1000E+01   10  .1000E+01   11  .1000E+01   12  .1000E+01   13  .1000E+01
14  .1000E+01   15  .1000E+01   16  .1000E+01
   17  .0000E+00   18  .0000E+00   19  .0000E+00   20  .0000E+00   21  .0000E+00
22  .0000E+00   23  .0000E+00   24  .0000E+00
                                                DAY OF WEEK = SATURDAY
    1  .0000E+00    2  .0000E+00    3  .0000E+00    4  .0000E+00    5  .0000E+00
6  .0000E+00    7  .0000E+00    8  .0000E+00
    9  .0000E+00   10  .0000E+00   11  .0000E+00   12  .0000E+00   13  .0000E+00
14  .0000E+00   15  .0000E+00   16  .0000E+00
   17  .0000E+00   18  .0000E+00   19  .0000E+00   20  .0000E+00   21  .0000E+00
22  .0000E+00   23  .0000E+00   24  .0000E+00
                                                DAY OF WEEK = SUNDAY
    1  .0000E+00    2  .0000E+00    3  .0000E+00    4  .0000E+00    5  .0000E+00
6  .0000E+00    7  .0000E+00    8  .0000E+00
    9  .0000E+00   10  .0000E+00   11  .0000E+00   12  .0000E+00   13  .0000E+00
14  .0000E+00   15  .0000E+00   16  .0000E+00
   17  .0000E+00   18  .0000E+00   19  .0000E+00   20  .0000E+00   21  .0000E+00
22  .0000E+00   23  .0000E+00   24  .0000E+00
```

```
 *** AERMOD - VERSION 22112  ***   *** C:\Lakes\Project Files\Garvey\Garvey.isc
***        03/04/24
 *** AERMET - VERSION  16216 ***   ***
***        13:00:54

PAGE  32
 *** MODELOPTs:    RegDFAULT  CONC  ELEV  URBAN  ADJ_U*

                   * SOURCE EMISSION RATE SCALARS WHICH VARY DIURNALLY AND BY DAY
OF WEEK (HRDOW) *

 SOURCE ID = L0001814     ; SOURCE TYPE = VOLUME   :
  HOUR   SCALAR   HOUR   SCALAR   HOUR   SCALAR   HOUR   SCALAR   HOUR   SCALAR
HOUR   SCALAR   HOUR   SCALAR   HOUR   SCALAR
 - - - - - - - - - - - - - - - - - - - - - - - - - - - - - - - - - - - - - - - -
- - - - - - - - - - - - - - - - - - - - - - - - -
                                                DAY OF WEEK = WEEKDAY
    1  .0000E+00    2  .0000E+00    3  .0000E+00    4  .0000E+00    5  .0000E+00
6  .0000E+00    7  .1000E+01    8  .1000E+01
    9  .1000E+01   10  .1000E+01   11  .1000E+01   12  .1000E+01   13  .1000E+01
14  .1000E+01   15  .1000E+01   16  .1000E+01
   17  .0000E+00   18  .0000E+00   19  .0000E+00   20  .0000E+00   21  .0000E+00
22  .0000E+00   23  .0000E+00   24  .0000E+00
                                                DAY OF WEEK = SATURDAY
    1  .0000E+00    2  .0000E+00    3  .0000E+00    4  .0000E+00    5  .0000E+00
6  .0000E+00    7  .0000E+00    8  .0000E+00
    9  .0000E+00   10  .0000E+00   11  .0000E+00   12  .0000E+00   13  .0000E+00
14  .0000E+00   15  .0000E+00   16  .0000E+00
   17  .0000E+00   18  .0000E+00   19  .0000E+00   20  .0000E+00   21  .0000E+00
22  .0000E+00   23  .0000E+00   24  .0000E+00
                                                DAY OF WEEK = SUNDAY
    1  .0000E+00    2  .0000E+00    3  .0000E+00    4  .0000E+00    5  .0000E+00
6  .0000E+00    7  .0000E+00    8  .0000E+00
    9  .0000E+00   10  .0000E+00   11  .0000E+00   12  .0000E+00   13  .0000E+00
14  .0000E+00   15  .0000E+00   16  .0000E+00
   17  .0000E+00   18  .0000E+00   19  .0000E+00   20  .0000E+00   21  .0000E+00
22  .0000E+00   23  .0000E+00   24  .0000E+00
```

```
 *** AERMOD - VERSION 22112  ***   *** C:\Lakes\Project Files\Garvey\Garvey.isc
***        03/04/24
 *** AERMET - VERSION  16216 ***   ***
***        13:00:54

PAGE  33
 *** MODELOPTs:    RegDFAULT  CONC  ELEV  URBAN  ADJ_U*

                   * SOURCE EMISSION RATE SCALARS WHICH VARY DIURNALLY AND BY DAY
OF WEEK (HRDOW) *

 SOURCE ID = L0001815     ; SOURCE TYPE = VOLUME   :
  HOUR   SCALAR   HOUR   SCALAR   HOUR   SCALAR   HOUR   SCALAR   HOUR   SCALAR
HOUR   SCALAR   HOUR   SCALAR   HOUR   SCALAR
 - - - - - - - - - - - - - - - - - - - - - - - - - - - - - - - - - - - - - - - -
- - - - - - - - - - - - - - - - - - - - - - - - -
                                                DAY OF WEEK = WEEKDAY
    1  .0000E+00    2  .0000E+00    3  .0000E+00    4  .0000E+00    5  .0000E+00
6  .0000E+00    7  .1000E+01    8  .1000E+01
    9  .1000E+01   10  .1000E+01   11  .1000E+01   12  .1000E+01   13  .1000E+01
14  .1000E+01   15  .1000E+01   16  .1000E+01
   17  .0000E+00   18  .0000E+00   19  .0000E+00   20  .0000E+00   21  .0000E+00
22  .0000E+00   23  .0000E+00   24  .0000E+00
                                                DAY OF WEEK = SATURDAY
    1  .0000E+00    2  .0000E+00    3  .0000E+00    4  .0000E+00    5  .0000E+00
6  .0000E+00    7  .0000E+00    8  .0000E+00
    9  .0000E+00   10  .0000E+00   11  .0000E+00   12  .0000E+00   13  .0000E+00
14  .0000E+00   15  .0000E+00   16  .0000E+00
   17  .0000E+00   18  .0000E+00   19  .0000E+00   20  .0000E+00   21  .0000E+00
22  .0000E+00   23  .0000E+00   24  .0000E+00
                                                DAY OF WEEK = SUNDAY
    1  .0000E+00    2  .0000E+00    3  .0000E+00    4  .0000E+00    5  .0000E+00
6  .0000E+00    7  .0000E+00    8  .0000E+00
    9  .0000E+00   10  .0000E+00   11  .0000E+00   12  .0000E+00   13  .0000E+00
14  .0000E+00   15  .0000E+00   16  .0000E+00
   17  .0000E+00   18  .0000E+00   19  .0000E+00   20  .0000E+00   21  .0000E+00
22  .0000E+00   23  .0000E+00   24  .0000E+00
```

```
 *** AERMOD - VERSION 22112  ***   *** C:\Lakes\Project Files\Garvey\Garvey.isc
***        03/04/24
 *** AERMET - VERSION  16216 ***   ***
***        13:00:54

PAGE  34
 *** MODELOPTs:    RegDFAULT  CONC  ELEV  URBAN  ADJ_U*

                   * SOURCE EMISSION RATE SCALARS WHICH VARY DIURNALLY AND BY DAY
OF WEEK (HRDOW) *

 SOURCE ID = L0001816     ; SOURCE TYPE = VOLUME   :
  HOUR   SCALAR   HOUR   SCALAR   HOUR   SCALAR   HOUR   SCALAR   HOUR   SCALAR
HOUR   SCALAR   HOUR   SCALAR   HOUR   SCALAR
 - - - - - - - - - - - - - - - - - - - - - - - - - - - - - - - - - - - - - - - -
- - - - - - - - - - - - - - - - - - - - - - - - -
                                                DAY OF WEEK = WEEKDAY
    1  .0000E+00    2  .0000E+00    3  .0000E+00    4  .0000E+00    5  .0000E+00
6  .0000E+00    7  .1000E+01    8  .1000E+01
    9  .1000E+01   10  .1000E+01   11  .1000E+01   12  .1000E+01   13  .1000E+01
14  .1000E+01   15  .1000E+01   16  .1000E+01
   17  .0000E+00   18  .0000E+00   19  .0000E+00   20  .0000E+00   21  .0000E+00
22  .0000E+00   23  .0000E+00   24  .0000E+00
                                                DAY OF WEEK = SATURDAY
    1  .0000E+00    2  .0000E+00    3  .0000E+00    4  .0000E+00    5  .0000E+00
6  .0000E+00    7  .0000E+00    8  .0000E+00
    9  .0000E+00   10  .0000E+00   11  .0000E+00   12  .0000E+00   13  .0000E+00
14  .0000E+00   15  .0000E+00   16  .0000E+00
   17  .0000E+00   18  .0000E+00   19  .0000E+00   20  .0000E+00   21  .0000E+00
22  .0000E+00   23  .0000E+00   24  .0000E+00
                                                DAY OF WEEK = SUNDAY
    1  .0000E+00    2  .0000E+00    3  .0000E+00    4  .0000E+00    5  .0000E+00
6  .0000E+00    7  .0000E+00    8  .0000E+00
    9  .0000E+00   10  .0000E+00   11  .0000E+00   12  .0000E+00   13  .0000E+00
14  .0000E+00   15  .0000E+00   16  .0000E+00
   17  .0000E+00   18  .0000E+00   19  .0000E+00   20  .0000E+00   21  .0000E+00
22  .0000E+00   23  .0000E+00   24  .0000E+00
```

```
 *** AERMOD - VERSION 22112  ***   *** C:\Lakes\Project Files\Garvey\Garvey.isc
***        03/04/24
 *** AERMET - VERSION  16216 ***   ***
***        13:00:54

PAGE  35
 *** MODELOPTs:    RegDFAULT  CONC  ELEV  URBAN  ADJ_U*

                   * SOURCE EMISSION RATE SCALARS WHICH VARY DIURNALLY AND BY DAY
OF WEEK (HRDOW) *

 SOURCE ID = L0001817     ; SOURCE TYPE = VOLUME   :
  HOUR   SCALAR   HOUR   SCALAR   HOUR   SCALAR   HOUR   SCALAR   HOUR   SCALAR
HOUR   SCALAR   HOUR   SCALAR   HOUR   SCALAR
 - - - - - - - - - - - - - - - - - - - - - - - - - - - - - - - - - - - - - - - -
- - - - - - - - - - - - - - - - - - - - - - - - - -
                                                DAY OF WEEK = WEEKDAY
    1  .0000E+00    2  .0000E+00    3  .0000E+00    4  .0000E+00    5  .0000E+00
6  .0000E+00    7  .1000E+01    8  .1000E+01
    9  .1000E+01   10  .1000E+01   11  .1000E+01   12  .1000E+01   13  .1000E+01
14  .1000E+01   15  .1000E+01   16  .1000E+01
   17  .0000E+00   18  .0000E+00   19  .0000E+00   20  .0000E+00   21  .0000E+00
22  .0000E+00   23  .0000E+00   24  .0000E+00
                                                DAY OF WEEK = SATURDAY
    1  .0000E+00    2  .0000E+00    3  .0000E+00    4  .0000E+00    5  .0000E+00
6  .0000E+00    7  .0000E+00    8  .0000E+00
    9  .0000E+00   10  .0000E+00   11  .0000E+00   12  .0000E+00   13  .0000E+00
14  .0000E+00   15  .0000E+00   16  .0000E+00
   17  .0000E+00   18  .0000E+00   19  .0000E+00   20  .0000E+00   21  .0000E+00
22  .0000E+00   23  .0000E+00   24  .0000E+00
                                                DAY OF WEEK = SUNDAY
    1  .0000E+00    2  .0000E+00    3  .0000E+00    4  .0000E+00    5  .0000E+00
6  .0000E+00    7  .0000E+00    8  .0000E+00
    9  .0000E+00   10  .0000E+00   11  .0000E+00   12  .0000E+00   13  .0000E+00
14  .0000E+00   15  .0000E+00   16  .0000E+00
   17  .0000E+00   18  .0000E+00   19  .0000E+00   20  .0000E+00   21  .0000E+00
22  .0000E+00   23  .0000E+00   24  .0000E+00
```

```
 *** AERMOD - VERSION 22112  ***   *** C:\Lakes\Project Files\Garvey\Garvey.isc
***        03/04/24
 *** AERMET - VERSION  16216 ***   ***
***        13:00:54

PAGE  36
 *** MODELOPTs:    RegDFAULT  CONC  ELEV  URBAN  ADJ_U*

                   * SOURCE EMISSION RATE SCALARS WHICH VARY DIURNALLY AND BY DAY
OF WEEK (HRDOW) *

 SOURCE ID = L0001818     ; SOURCE TYPE = VOLUME   :
  HOUR   SCALAR   HOUR   SCALAR   HOUR   SCALAR   HOUR   SCALAR   HOUR   SCALAR
HOUR   SCALAR   HOUR   SCALAR   HOUR   SCALAR
 - - - - - - - - - - - - - - - - - - - - - - - - - - - - - - - - - - - - - - - -
- - - - - - - - - - - - - - - - - - - - - - - - - -
                                                DAY OF WEEK = WEEKDAY
    1  .0000E+00    2  .0000E+00    3  .0000E+00    4  .0000E+00    5  .0000E+00
6  .0000E+00    7  .1000E+01    8  .1000E+01
    9  .1000E+01   10  .1000E+01   11  .1000E+01   12  .1000E+01   13  .1000E+01
14  .1000E+01   15  .1000E+01   16  .1000E+01
   17  .0000E+00   18  .0000E+00   19  .0000E+00   20  .0000E+00   21  .0000E+00
22  .0000E+00   23  .0000E+00   24  .0000E+00
                                                DAY OF WEEK = SATURDAY
    1  .0000E+00    2  .0000E+00    3  .0000E+00    4  .0000E+00    5  .0000E+00
6  .0000E+00    7  .0000E+00    8  .0000E+00
    9  .0000E+00   10  .0000E+00   11  .0000E+00   12  .0000E+00   13  .0000E+00
14  .0000E+00   15  .0000E+00   16  .0000E+00
   17  .0000E+00   18  .0000E+00   19  .0000E+00   20  .0000E+00   21  .0000E+00
22  .0000E+00   23  .0000E+00   24  .0000E+00
                                                DAY OF WEEK = SUNDAY
    1  .0000E+00    2  .0000E+00    3  .0000E+00    4  .0000E+00    5  .0000E+00
6  .0000E+00    7  .0000E+00    8  .0000E+00
    9  .0000E+00   10  .0000E+00   11  .0000E+00   12  .0000E+00   13  .0000E+00
14  .0000E+00   15  .0000E+00   16  .0000E+00
   17  .0000E+00   18  .0000E+00   19  .0000E+00   20  .0000E+00   21  .0000E+00
22  .0000E+00   23  .0000E+00   24  .0000E+00
```

```
 *** AERMOD - VERSION 22112  ***   *** C:\Lakes\Project Files\Garvey\Garvey.isc
***        03/04/24
 *** AERMET - VERSION  16216 ***   ***
***        13:00:54

PAGE  37
 *** MODELOPTs:    RegDFAULT  CONC  ELEV  URBAN  ADJ_U*

                   * SOURCE EMISSION RATE SCALARS WHICH VARY DIURNALLY AND BY DAY
OF WEEK (HRDOW) *

 SOURCE ID = L0001819     ; SOURCE TYPE = VOLUME   :
  HOUR   SCALAR   HOUR   SCALAR   HOUR   SCALAR   HOUR   SCALAR   HOUR   SCALAR
HOUR   SCALAR   HOUR   SCALAR   HOUR   SCALAR
 - - - - - - - - - - - - - - - - - - - - - - - - - - - - - - - - - - - - - - - -
- - - - - - - - - - - - - - - - - - - - - - - - - -
                                                DAY OF WEEK = WEEKDAY
    1  .0000E+00    2  .0000E+00    3  .0000E+00    4  .0000E+00    5  .0000E+00
6  .0000E+00    7  .1000E+01    8  .1000E+01
    9  .1000E+01   10  .1000E+01   11  .1000E+01   12  .1000E+01   13  .1000E+01
14  .1000E+01   15  .1000E+01   16  .1000E+01
   17  .0000E+00   18  .0000E+00   19  .0000E+00   20  .0000E+00   21  .0000E+00
22  .0000E+00   23  .0000E+00   24  .0000E+00
                                                DAY OF WEEK = SATURDAY
    1  .0000E+00    2  .0000E+00    3  .0000E+00    4  .0000E+00    5  .0000E+00
6  .0000E+00    7  .0000E+00    8  .0000E+00
    9  .0000E+00   10  .0000E+00   11  .0000E+00   12  .0000E+00   13  .0000E+00
14  .0000E+00   15  .0000E+00   16  .0000E+00
   17  .0000E+00   18  .0000E+00   19  .0000E+00   20  .0000E+00   21  .0000E+00
22  .0000E+00   23  .0000E+00   24  .0000E+00
                                                DAY OF WEEK = SUNDAY
    1  .0000E+00    2  .0000E+00    3  .0000E+00    4  .0000E+00    5  .0000E+00
6  .0000E+00    7  .0000E+00    8  .0000E+00
    9  .0000E+00   10  .0000E+00   11  .0000E+00   12  .0000E+00   13  .0000E+00
14  .0000E+00   15  .0000E+00   16  .0000E+00
   17  .0000E+00   18  .0000E+00   19  .0000E+00   20  .0000E+00   21  .0000E+00
22  .0000E+00   23  .0000E+00   24  .0000E+00
```

```
 *** AERMOD - VERSION 22112  ***   *** C:\Lakes\Project Files\Garvey\Garvey.isc
***        03/04/24
 *** AERMET - VERSION  16216 ***   ***
***        13:00:54

PAGE  38
 *** MODELOPTs:    RegDFAULT  CONC  ELEV  URBAN  ADJ_U*

                   * SOURCE EMISSION RATE SCALARS WHICH VARY DIURNALLY AND BY DAY
OF WEEK (HRDOW) *

 SOURCE ID = L0001820     ; SOURCE TYPE = VOLUME   :
  HOUR   SCALAR   HOUR   SCALAR   HOUR   SCALAR   HOUR   SCALAR   HOUR   SCALAR
HOUR   SCALAR   HOUR   SCALAR   HOUR   SCALAR
 - - - - - - - - - - - - - - - - - - - - - - - - - - - - - - - - - - - - - - - -
- - - - - - - - - - - - - - - - - - - - - - - - -
                                                DAY OF WEEK = WEEKDAY
    1  .0000E+00    2  .0000E+00    3  .0000E+00    4  .0000E+00    5  .0000E+00
6  .0000E+00    7  .1000E+01    8  .1000E+01
    9  .1000E+01   10  .1000E+01   11  .1000E+01   12  .1000E+01   13  .1000E+01
14  .1000E+01   15  .1000E+01   16  .1000E+01
   17  .0000E+00   18  .0000E+00   19  .0000E+00   20  .0000E+00   21  .0000E+00
22  .0000E+00   23  .0000E+00   24  .0000E+00
                                                DAY OF WEEK = SATURDAY
    1  .0000E+00    2  .0000E+00    3  .0000E+00    4  .0000E+00    5  .0000E+00
6  .0000E+00    7  .0000E+00    8  .0000E+00
    9  .0000E+00   10  .0000E+00   11  .0000E+00   12  .0000E+00   13  .0000E+00
14  .0000E+00   15  .0000E+00   16  .0000E+00
   17  .0000E+00   18  .0000E+00   19  .0000E+00   20  .0000E+00   21  .0000E+00
22  .0000E+00   23  .0000E+00   24  .0000E+00
                                                DAY OF WEEK = SUNDAY
    1  .0000E+00    2  .0000E+00    3  .0000E+00    4  .0000E+00    5  .0000E+00
6  .0000E+00    7  .0000E+00    8  .0000E+00
    9  .0000E+00   10  .0000E+00   11  .0000E+00   12  .0000E+00   13  .0000E+00
14  .0000E+00   15  .0000E+00   16  .0000E+00
   17  .0000E+00   18  .0000E+00   19  .0000E+00   20  .0000E+00   21  .0000E+00
22  .0000E+00   23  .0000E+00   24  .0000E+00
```

```
 *** AERMOD - VERSION 22112  ***   *** C:\Lakes\Project Files\Garvey\Garvey.isc
***        03/04/24
 *** AERMET - VERSION  16216 ***   ***
***        13:00:54

PAGE  39
 *** MODELOPTs:    RegDFAULT  CONC  ELEV  URBAN  ADJ_U*

                   * SOURCE EMISSION RATE SCALARS WHICH VARY DIURNALLY AND BY DAY
OF WEEK (HRDOW) *

 SOURCE ID = L0001821     ; SOURCE TYPE = VOLUME   :
  HOUR   SCALAR   HOUR   SCALAR   HOUR   SCALAR   HOUR   SCALAR   HOUR   SCALAR
HOUR   SCALAR   HOUR   SCALAR   HOUR   SCALAR
 - - - - - - - - - - - - - - - - - - - - - - - - - - - - - - - - - - - - - - - -
- - - - - - - - - - - - - - - - - - - - - - - - - -
                                                DAY OF WEEK = WEEKDAY
    1  .0000E+00    2  .0000E+00    3  .0000E+00    4  .0000E+00    5  .0000E+00
6  .0000E+00    7  .1000E+01    8  .1000E+01
    9  .1000E+01   10  .1000E+01   11  .1000E+01   12  .1000E+01   13  .1000E+01
14  .1000E+01   15  .1000E+01   16  .1000E+01
   17  .0000E+00   18  .0000E+00   19  .0000E+00   20  .0000E+00   21  .0000E+00
22  .0000E+00   23  .0000E+00   24  .0000E+00
                                                DAY OF WEEK = SATURDAY
    1  .0000E+00    2  .0000E+00    3  .0000E+00    4  .0000E+00    5  .0000E+00
6  .0000E+00    7  .0000E+00    8  .0000E+00
    9  .0000E+00   10  .0000E+00   11  .0000E+00   12  .0000E+00   13  .0000E+00
14  .0000E+00   15  .0000E+00   16  .0000E+00
   17  .0000E+00   18  .0000E+00   19  .0000E+00   20  .0000E+00   21  .0000E+00
22  .0000E+00   23  .0000E+00   24  .0000E+00
                                                DAY OF WEEK = SUNDAY
    1  .0000E+00    2  .0000E+00    3  .0000E+00    4  .0000E+00    5  .0000E+00
6  .0000E+00    7  .0000E+00    8  .0000E+00
    9  .0000E+00   10  .0000E+00   11  .0000E+00   12  .0000E+00   13  .0000E+00
14  .0000E+00   15  .0000E+00   16  .0000E+00
   17  .0000E+00   18  .0000E+00   19  .0000E+00   20  .0000E+00   21  .0000E+00
22  .0000E+00   23  .0000E+00   24  .0000E+00
```

```
 *** AERMOD - VERSION 22112  ***   *** C:\Lakes\Project Files\Garvey\Garvey.isc
***        03/04/24
 *** AERMET - VERSION  16216 ***   ***
***        13:00:54

PAGE  40
 *** MODELOPTs:    RegDFAULT  CONC  ELEV  URBAN  ADJ_U*

                   * SOURCE EMISSION RATE SCALARS WHICH VARY DIURNALLY AND BY DAY
OF WEEK (HRDOW) *

 SOURCE ID = L0001822     ; SOURCE TYPE = VOLUME   :
  HOUR   SCALAR   HOUR   SCALAR   HOUR   SCALAR   HOUR   SCALAR   HOUR   SCALAR
HOUR   SCALAR   HOUR   SCALAR   HOUR   SCALAR
 - - - - - - - - - - - - - - - - - - - - - - - - - - - - - - - - - - - - - - - -
- - - - - - - - - - - - - - - - - - - - - - - - -
                                                DAY OF WEEK = WEEKDAY
    1  .0000E+00    2  .0000E+00    3  .0000E+00    4  .0000E+00    5  .0000E+00
6  .0000E+00    7  .1000E+01    8  .1000E+01
    9  .1000E+01   10  .1000E+01   11  .1000E+01   12  .1000E+01   13  .1000E+01
14  .1000E+01   15  .1000E+01   16  .1000E+01
   17  .0000E+00   18  .0000E+00   19  .0000E+00   20  .0000E+00   21  .0000E+00
22  .0000E+00   23  .0000E+00   24  .0000E+00
                                                DAY OF WEEK = SATURDAY
    1  .0000E+00    2  .0000E+00    3  .0000E+00    4  .0000E+00    5  .0000E+00
6  .0000E+00    7  .0000E+00    8  .0000E+00
    9  .0000E+00   10  .0000E+00   11  .0000E+00   12  .0000E+00   13  .0000E+00
14  .0000E+00   15  .0000E+00   16  .0000E+00
   17  .0000E+00   18  .0000E+00   19  .0000E+00   20  .0000E+00   21  .0000E+00
22  .0000E+00   23  .0000E+00   24  .0000E+00
                                                DAY OF WEEK = SUNDAY
    1  .0000E+00    2  .0000E+00    3  .0000E+00    4  .0000E+00    5  .0000E+00
6  .0000E+00    7  .0000E+00    8  .0000E+00
    9  .0000E+00   10  .0000E+00   11  .0000E+00   12  .0000E+00   13  .0000E+00
14  .0000E+00   15  .0000E+00   16  .0000E+00
   17  .0000E+00   18  .0000E+00   19  .0000E+00   20  .0000E+00   21  .0000E+00
22  .0000E+00   23  .0000E+00   24  .0000E+00
```

```
 *** AERMOD - VERSION 22112  ***   *** C:\Lakes\Project Files\Garvey\Garvey.isc
***        03/04/24
 *** AERMET - VERSION  16216 ***   ***
***        13:00:54

PAGE  41
 *** MODELOPTs:    RegDFAULT  CONC  ELEV  URBAN  ADJ_U*

                   * SOURCE EMISSION RATE SCALARS WHICH VARY DIURNALLY AND BY DAY
OF WEEK (HRDOW) *

 SOURCE ID = L0001823     ; SOURCE TYPE = VOLUME   :
  HOUR   SCALAR   HOUR   SCALAR   HOUR   SCALAR   HOUR   SCALAR   HOUR   SCALAR
HOUR   SCALAR   HOUR   SCALAR   HOUR   SCALAR
 - - - - - - - - - - - - - - - - - - - - - - - - - - - - - - - - - - - - - - - -
- - - - - - - - - - - - - - - - - - - - - - - - - -
                                                DAY OF WEEK = WEEKDAY
    1  .0000E+00    2  .0000E+00    3  .0000E+00    4  .0000E+00    5  .0000E+00
6  .0000E+00    7  .1000E+01    8  .1000E+01
    9  .1000E+01   10  .1000E+01   11  .1000E+01   12  .1000E+01   13  .1000E+01
14  .1000E+01   15  .1000E+01   16  .1000E+01
   17  .0000E+00   18  .0000E+00   19  .0000E+00   20  .0000E+00   21  .0000E+00
22  .0000E+00   23  .0000E+00   24  .0000E+00
                                                DAY OF WEEK = SATURDAY
    1  .0000E+00    2  .0000E+00    3  .0000E+00    4  .0000E+00    5  .0000E+00
6  .0000E+00    7  .0000E+00    8  .0000E+00
    9  .0000E+00   10  .0000E+00   11  .0000E+00   12  .0000E+00   13  .0000E+00
14  .0000E+00   15  .0000E+00   16  .0000E+00
   17  .0000E+00   18  .0000E+00   19  .0000E+00   20  .0000E+00   21  .0000E+00
22  .0000E+00   23  .0000E+00   24  .0000E+00
                                                DAY OF WEEK = SUNDAY
    1  .0000E+00    2  .0000E+00    3  .0000E+00    4  .0000E+00    5  .0000E+00
6  .0000E+00    7  .0000E+00    8  .0000E+00
    9  .0000E+00   10  .0000E+00   11  .0000E+00   12  .0000E+00   13  .0000E+00
14  .0000E+00   15  .0000E+00   16  .0000E+00
   17  .0000E+00   18  .0000E+00   19  .0000E+00   20  .0000E+00   21  .0000E+00
22  .0000E+00   23  .0000E+00   24  .0000E+00
```

```
 *** AERMOD - VERSION 22112  ***   *** C:\Lakes\Project Files\Garvey\Garvey.isc
***        03/04/24
 *** AERMET - VERSION  16216 ***   ***
***        13:00:54

PAGE  42
 *** MODELOPTs:    RegDFAULT  CONC  ELEV  URBAN  ADJ_U*

                   * SOURCE EMISSION RATE SCALARS WHICH VARY DIURNALLY AND BY DAY
OF WEEK (HRDOW) *

 SOURCE ID = L0001824     ; SOURCE TYPE = VOLUME   :
  HOUR   SCALAR   HOUR   SCALAR   HOUR   SCALAR   HOUR   SCALAR   HOUR   SCALAR
HOUR   SCALAR   HOUR   SCALAR   HOUR   SCALAR
 - - - - - - - - - - - - - - - - - - - - - - - - - - - - - - - - - - - - - - - -
- - - - - - - - - - - - - - - - - - - - - - - - - -
                                                DAY OF WEEK = WEEKDAY
    1  .0000E+00    2  .0000E+00    3  .0000E+00    4  .0000E+00    5  .0000E+00
6  .0000E+00    7  .1000E+01    8  .1000E+01
    9  .1000E+01   10  .1000E+01   11  .1000E+01   12  .1000E+01   13  .1000E+01
14  .1000E+01   15  .1000E+01   16  .1000E+01
   17  .0000E+00   18  .0000E+00   19  .0000E+00   20  .0000E+00   21  .0000E+00
22  .0000E+00   23  .0000E+00   24  .0000E+00
                                                DAY OF WEEK = SATURDAY
    1  .0000E+00    2  .0000E+00    3  .0000E+00    4  .0000E+00    5  .0000E+00
6  .0000E+00    7  .0000E+00    8  .0000E+00
    9  .0000E+00   10  .0000E+00   11  .0000E+00   12  .0000E+00   13  .0000E+00
14  .0000E+00   15  .0000E+00   16  .0000E+00
   17  .0000E+00   18  .0000E+00   19  .0000E+00   20  .0000E+00   21  .0000E+00
22  .0000E+00   23  .0000E+00   24  .0000E+00
                                                DAY OF WEEK = SUNDAY
    1  .0000E+00    2  .0000E+00    3  .0000E+00    4  .0000E+00    5  .0000E+00
6  .0000E+00    7  .0000E+00    8  .0000E+00
    9  .0000E+00   10  .0000E+00   11  .0000E+00   12  .0000E+00   13  .0000E+00
14  .0000E+00   15  .0000E+00   16  .0000E+00
   17  .0000E+00   18  .0000E+00   19  .0000E+00   20  .0000E+00   21  .0000E+00
22  .0000E+00   23  .0000E+00   24  .0000E+00
```

```
 *** AERMOD - VERSION 22112  ***   *** C:\Lakes\Project Files\Garvey\Garvey.isc
***        03/04/24
 *** AERMET - VERSION  16216 ***   ***
***        13:00:54

PAGE  43
 *** MODELOPTs:    RegDFAULT  CONC  ELEV  URBAN  ADJ_U*

                   * SOURCE EMISSION RATE SCALARS WHICH VARY DIURNALLY AND BY DAY
OF WEEK (HRDOW) *

 SOURCE ID = L0001825     ; SOURCE TYPE = VOLUME   :
  HOUR   SCALAR   HOUR   SCALAR   HOUR   SCALAR   HOUR   SCALAR   HOUR   SCALAR
HOUR   SCALAR   HOUR   SCALAR   HOUR   SCALAR
 - - - - - - - - - - - - - - - - - - - - - - - - - - - - - - - - - - - - - - - -
- - - - - - - - - - - - - - - - - - - - - - - - -
                                                DAY OF WEEK = WEEKDAY
    1  .0000E+00    2  .0000E+00    3  .0000E+00    4  .0000E+00    5  .0000E+00
6  .0000E+00    7  .1000E+01    8  .1000E+01
    9  .1000E+01   10  .1000E+01   11  .1000E+01   12  .1000E+01   13  .1000E+01
14  .1000E+01   15  .1000E+01   16  .1000E+01
   17  .0000E+00   18  .0000E+00   19  .0000E+00   20  .0000E+00   21  .0000E+00
22  .0000E+00   23  .0000E+00   24  .0000E+00
                                                DAY OF WEEK = SATURDAY
    1  .0000E+00    2  .0000E+00    3  .0000E+00    4  .0000E+00    5  .0000E+00
6  .0000E+00    7  .0000E+00    8  .0000E+00
    9  .0000E+00   10  .0000E+00   11  .0000E+00   12  .0000E+00   13  .0000E+00
14  .0000E+00   15  .0000E+00   16  .0000E+00
   17  .0000E+00   18  .0000E+00   19  .0000E+00   20  .0000E+00   21  .0000E+00
22  .0000E+00   23  .0000E+00   24  .0000E+00
                                                DAY OF WEEK = SUNDAY
    1  .0000E+00    2  .0000E+00    3  .0000E+00    4  .0000E+00    5  .0000E+00
6  .0000E+00    7  .0000E+00    8  .0000E+00
    9  .0000E+00   10  .0000E+00   11  .0000E+00   12  .0000E+00   13  .0000E+00
14  .0000E+00   15  .0000E+00   16  .0000E+00
   17  .0000E+00   18  .0000E+00   19  .0000E+00   20  .0000E+00   21  .0000E+00
22  .0000E+00   23  .0000E+00   24  .0000E+00
```

```
 *** AERMOD - VERSION 22112  ***   *** C:\Lakes\Project Files\Garvey\Garvey.isc
***        03/04/24
 *** AERMET - VERSION  16216 ***   ***
***        13:00:54

PAGE  44
 *** MODELOPTs:    RegDFAULT  CONC  ELEV  URBAN  ADJ_U*

                   * SOURCE EMISSION RATE SCALARS WHICH VARY DIURNALLY AND BY DAY
OF WEEK (HRDOW) *

 SOURCE ID = L0001826     ; SOURCE TYPE = VOLUME   :
  HOUR   SCALAR   HOUR   SCALAR   HOUR   SCALAR   HOUR   SCALAR   HOUR   SCALAR
HOUR   SCALAR   HOUR   SCALAR   HOUR   SCALAR
 - - - - - - - - - - - - - - - - - - - - - - - - - - - - - - - - - - - - - - - -
- - - - - - - - - - - - - - - - - - - - - - - - - -
                                                DAY OF WEEK = WEEKDAY
    1  .0000E+00    2  .0000E+00    3  .0000E+00    4  .0000E+00    5  .0000E+00
6  .0000E+00    7  .1000E+01    8  .1000E+01
    9  .1000E+01   10  .1000E+01   11  .1000E+01   12  .1000E+01   13  .1000E+01
14  .1000E+01   15  .1000E+01   16  .1000E+01
   17  .0000E+00   18  .0000E+00   19  .0000E+00   20  .0000E+00   21  .0000E+00
22  .0000E+00   23  .0000E+00   24  .0000E+00
                                                DAY OF WEEK = SATURDAY
    1  .0000E+00    2  .0000E+00    3  .0000E+00    4  .0000E+00    5  .0000E+00
6  .0000E+00    7  .0000E+00    8  .0000E+00
    9  .0000E+00   10  .0000E+00   11  .0000E+00   12  .0000E+00   13  .0000E+00
14  .0000E+00   15  .0000E+00   16  .0000E+00
   17  .0000E+00   18  .0000E+00   19  .0000E+00   20  .0000E+00   21  .0000E+00
22  .0000E+00   23  .0000E+00   24  .0000E+00
                                                DAY OF WEEK = SUNDAY
    1  .0000E+00    2  .0000E+00    3  .0000E+00    4  .0000E+00    5  .0000E+00
6  .0000E+00    7  .0000E+00    8  .0000E+00
    9  .0000E+00   10  .0000E+00   11  .0000E+00   12  .0000E+00   13  .0000E+00
14  .0000E+00   15  .0000E+00   16  .0000E+00
   17  .0000E+00   18  .0000E+00   19  .0000E+00   20  .0000E+00   21  .0000E+00
22  .0000E+00   23  .0000E+00   24  .0000E+00
```

```
 *** AERMOD - VERSION 22112  ***   *** C:\Lakes\Project Files\Garvey\Garvey.isc
***        03/04/24
 *** AERMET - VERSION  16216 ***   ***
***        13:00:54

PAGE  45
 *** MODELOPTs:    RegDFAULT  CONC  ELEV  URBAN  ADJ_U*

                   * SOURCE EMISSION RATE SCALARS WHICH VARY DIURNALLY AND BY DAY
OF WEEK (HRDOW) *

 SOURCE ID = L0001827     ; SOURCE TYPE = VOLUME   :
  HOUR   SCALAR   HOUR   SCALAR   HOUR   SCALAR   HOUR   SCALAR   HOUR   SCALAR
HOUR   SCALAR   HOUR   SCALAR   HOUR   SCALAR
 - - - - - - - - - - - - - - - - - - - - - - - - - - - - - - - - - - - - - - - -
- - - - - - - - - - - - - - - - - - - - - - - - - - -
                                                DAY OF WEEK = WEEKDAY
    1  .0000E+00    2  .0000E+00    3  .0000E+00    4  .0000E+00    5  .0000E+00
6  .0000E+00    7  .1000E+01    8  .1000E+01
    9  .1000E+01   10  .1000E+01   11  .1000E+01   12  .1000E+01   13  .1000E+01
14  .1000E+01   15  .1000E+01   16  .1000E+01
   17  .0000E+00   18  .0000E+00   19  .0000E+00   20  .0000E+00   21  .0000E+00
22  .0000E+00   23  .0000E+00   24  .0000E+00
                                                DAY OF WEEK = SATURDAY
    1  .0000E+00    2  .0000E+00    3  .0000E+00    4  .0000E+00    5  .0000E+00
6  .0000E+00    7  .0000E+00    8  .0000E+00
    9  .0000E+00   10  .0000E+00   11  .0000E+00   12  .0000E+00   13  .0000E+00
14  .0000E+00   15  .0000E+00   16  .0000E+00
   17  .0000E+00   18  .0000E+00   19  .0000E+00   20  .0000E+00   21  .0000E+00
22  .0000E+00   23  .0000E+00   24  .0000E+00
                                                DAY OF WEEK = SUNDAY
    1  .0000E+00    2  .0000E+00    3  .0000E+00    4  .0000E+00    5  .0000E+00
6  .0000E+00    7  .0000E+00    8  .0000E+00
    9  .0000E+00   10  .0000E+00   11  .0000E+00   12  .0000E+00   13  .0000E+00
14  .0000E+00   15  .0000E+00   16  .0000E+00
   17  .0000E+00   18  .0000E+00   19  .0000E+00   20  .0000E+00   21  .0000E+00
22  .0000E+00   23  .0000E+00   24  .0000E+00
```

```
 *** AERMOD - VERSION 22112  ***   *** C:\Lakes\Project Files\Garvey\Garvey.isc
***        03/04/24
 *** AERMET - VERSION  16216 ***   ***
***        13:00:54

PAGE  46
 *** MODELOPTs:    RegDFAULT  CONC  ELEV  URBAN  ADJ_U*

                   * SOURCE EMISSION RATE SCALARS WHICH VARY DIURNALLY AND BY DAY
OF WEEK (HRDOW) *

 SOURCE ID = L0001828     ; SOURCE TYPE = VOLUME   :
  HOUR   SCALAR   HOUR   SCALAR   HOUR   SCALAR   HOUR   SCALAR   HOUR   SCALAR
HOUR   SCALAR   HOUR   SCALAR   HOUR   SCALAR
 - - - - - - - - - - - - - - - - - - - - - - - - - - - - - - - - - - - - - - - -
- - - - - - - - - - - - - - - - - - - - - - - - -
                                                DAY OF WEEK = WEEKDAY
    1  .0000E+00    2  .0000E+00    3  .0000E+00    4  .0000E+00    5  .0000E+00
6  .0000E+00    7  .1000E+01    8  .1000E+01
    9  .1000E+01   10  .1000E+01   11  .1000E+01   12  .1000E+01   13  .1000E+01
14  .1000E+01   15  .1000E+01   16  .1000E+01
   17  .0000E+00   18  .0000E+00   19  .0000E+00   20  .0000E+00   21  .0000E+00
22  .0000E+00   23  .0000E+00   24  .0000E+00
                                                DAY OF WEEK = SATURDAY
    1  .0000E+00    2  .0000E+00    3  .0000E+00    4  .0000E+00    5  .0000E+00
6  .0000E+00    7  .0000E+00    8  .0000E+00
    9  .0000E+00   10  .0000E+00   11  .0000E+00   12  .0000E+00   13  .0000E+00
14  .0000E+00   15  .0000E+00   16  .0000E+00
   17  .0000E+00   18  .0000E+00   19  .0000E+00   20  .0000E+00   21  .0000E+00
22  .0000E+00   23  .0000E+00   24  .0000E+00
                                                DAY OF WEEK = SUNDAY
    1  .0000E+00    2  .0000E+00    3  .0000E+00    4  .0000E+00    5  .0000E+00
6  .0000E+00    7  .0000E+00    8  .0000E+00
    9  .0000E+00   10  .0000E+00   11  .0000E+00   12  .0000E+00   13  .0000E+00
14  .0000E+00   15  .0000E+00   16  .0000E+00
   17  .0000E+00   18  .0000E+00   19  .0000E+00   20  .0000E+00   21  .0000E+00
22  .0000E+00   23  .0000E+00   24  .0000E+00
```

*** MODELOPTs: RegDFAULT CONC ELEV URBAN ADJ_U*

* SOURCE EMISSION RATE SCALARS WHICH VARY DIURNALLY AND BY DAY OF WEEK (HRDOW) *

SOURCE ID = L0001829 ; SOURCE TYPE = VOLUME :

```
  HOUR   SCALAR   HOUR   SCALAR   HOUR   SCALAR   HOUR   SCALAR   HOUR   SCALAR
HOUR   SCALAR   HOUR   SCALAR   HOUR   SCALAR
 - - - - - - - - - - - - - - - - - - - - - - - - - - - - - - - - - - - - - - - - -
- - - - - - - - - - - - - - - - - - - - - - - - - -
                                                DAY OF WEEK = WEEKDAY
    1  .0000E+00    2  .0000E+00    3  .0000E+00    4  .0000E+00    5  .0000E+00
6  .0000E+00    7  .1000E+01    8  .1000E+01
    9  .1000E+01   10  .1000E+01   11  .1000E+01   12  .1000E+01   13  .1000E+01
14  .1000E+01   15  .1000E+01   16  .1000E+01
   17  .0000E+00   18  .0000E+00   19  .0000E+00   20  .0000E+00   21  .0000E+00
22  .0000E+00   23  .0000E+00   24  .0000E+00
                                                DAY OF WEEK = SATURDAY
    1  .0000E+00    2  .0000E+00    3  .0000E+00    4  .0000E+00    5  .0000E+00
6  .0000E+00    7  .0000E+00    8  .0000E+00
    9  .0000E+00   10  .0000E+00   11  .0000E+00   12  .0000E+00   13  .0000E+00
14  .0000E+00   15  .0000E+00   16  .0000E+00
   17  .0000E+00   18  .0000E+00   19  .0000E+00   20  .0000E+00   21  .0000E+00
22  .0000E+00   23  .0000E+00   24  .0000E+00
                                                DAY OF WEEK = SUNDAY
    1  .0000E+00    2  .0000E+00    3  .0000E+00    4  .0000E+00    5  .0000E+00
6  .0000E+00    7  .0000E+00    8  .0000E+00
    9  .0000E+00   10  .0000E+00   11  .0000E+00   12  .0000E+00   13  .0000E+00
14  .0000E+00   15  .0000E+00   16  .0000E+00
   17  .0000E+00   18  .0000E+00   19  .0000E+00   20  .0000E+00   21  .0000E+00
22  .0000E+00   23  .0000E+00   24  .0000E+00
```

```
 *** AERMOD - VERSION 22112  ***   *** C:\Lakes\Project Files\Garvey\Garvey.isc
***        03/04/24
 *** AERMET - VERSION  16216 ***   ***
***        13:00:54

PAGE  48
 *** MODELOPTs:    RegDFAULT  CONC  ELEV  URBAN  ADJ_U*

                   * SOURCE EMISSION RATE SCALARS WHICH VARY DIURNALLY AND BY DAY
OF WEEK (HRDOW) *

 SOURCE ID = L0001830     ; SOURCE TYPE = VOLUME   :
  HOUR   SCALAR   HOUR   SCALAR   HOUR   SCALAR   HOUR   SCALAR   HOUR   SCALAR
HOUR   SCALAR   HOUR   SCALAR   HOUR   SCALAR
 - - - - - - - - - - - - - - - - - - - - - - - - - - - - - - - - - - - - - - - -
- - - - - - - - - - - - - - - - - - - - - - - - - -
                                                DAY OF WEEK = WEEKDAY
    1  .0000E+00    2  .0000E+00    3  .0000E+00    4  .0000E+00    5  .0000E+00
6  .0000E+00    7  .1000E+01    8  .1000E+01
    9  .1000E+01   10  .1000E+01   11  .1000E+01   12  .1000E+01   13  .1000E+01
14  .1000E+01   15  .1000E+01   16  .1000E+01
   17  .0000E+00   18  .0000E+00   19  .0000E+00   20  .0000E+00   21  .0000E+00
22  .0000E+00   23  .0000E+00   24  .0000E+00
                                                DAY OF WEEK = SATURDAY
    1  .0000E+00    2  .0000E+00    3  .0000E+00    4  .0000E+00    5  .0000E+00
6  .0000E+00    7  .0000E+00    8  .0000E+00
    9  .0000E+00   10  .0000E+00   11  .0000E+00   12  .0000E+00   13  .0000E+00
14  .0000E+00   15  .0000E+00   16  .0000E+00
   17  .0000E+00   18  .0000E+00   19  .0000E+00   20  .0000E+00   21  .0000E+00
22  .0000E+00   23  .0000E+00   24  .0000E+00
                                                DAY OF WEEK = SUNDAY
    1  .0000E+00    2  .0000E+00    3  .0000E+00    4  .0000E+00    5  .0000E+00
6  .0000E+00    7  .0000E+00    8  .0000E+00
    9  .0000E+00   10  .0000E+00   11  .0000E+00   12  .0000E+00   13  .0000E+00
14  .0000E+00   15  .0000E+00   16  .0000E+00
   17  .0000E+00   18  .0000E+00   19  .0000E+00   20  .0000E+00   21  .0000E+00
22  .0000E+00   23  .0000E+00   24  .0000E+00
```

```
 *** AERMOD - VERSION 22112  ***   *** C:\Lakes\Project Files\Garvey\Garvey.isc
***        03/04/24
 *** AERMET - VERSION  16216 ***   ***
***        13:00:54

PAGE  49
 *** MODELOPTs:    RegDFAULT  CONC  ELEV  URBAN  ADJ_U*

                   * SOURCE EMISSION RATE SCALARS WHICH VARY DIURNALLY AND BY DAY
OF WEEK (HRDOW) *

 SOURCE ID = L0001831     ; SOURCE TYPE = VOLUME   :
  HOUR   SCALAR   HOUR   SCALAR   HOUR   SCALAR   HOUR   SCALAR   HOUR   SCALAR
HOUR   SCALAR   HOUR   SCALAR   HOUR   SCALAR
 - - - - - - - - - - - - - - - - - - - - - - - - - - - - - - - - - - - - - - - -
- - - - - - - - - - - - - - - - - - - - - - - - - -
                                                DAY OF WEEK = WEEKDAY
    1  .0000E+00    2  .0000E+00    3  .0000E+00    4  .0000E+00    5  .0000E+00
6  .0000E+00    7  .1000E+01    8  .1000E+01
    9  .1000E+01   10  .1000E+01   11  .1000E+01   12  .1000E+01   13  .1000E+01
14  .1000E+01   15  .1000E+01   16  .1000E+01
   17  .0000E+00   18  .0000E+00   19  .0000E+00   20  .0000E+00   21  .0000E+00
22  .0000E+00   23  .0000E+00   24  .0000E+00
                                                DAY OF WEEK = SATURDAY
    1  .0000E+00    2  .0000E+00    3  .0000E+00    4  .0000E+00    5  .0000E+00
6  .0000E+00    7  .0000E+00    8  .0000E+00
    9  .0000E+00   10  .0000E+00   11  .0000E+00   12  .0000E+00   13  .0000E+00
14  .0000E+00   15  .0000E+00   16  .0000E+00
   17  .0000E+00   18  .0000E+00   19  .0000E+00   20  .0000E+00   21  .0000E+00
22  .0000E+00   23  .0000E+00   24  .0000E+00
                                                DAY OF WEEK = SUNDAY
    1  .0000E+00    2  .0000E+00    3  .0000E+00    4  .0000E+00    5  .0000E+00
6  .0000E+00    7  .0000E+00    8  .0000E+00
    9  .0000E+00   10  .0000E+00   11  .0000E+00   12  .0000E+00   13  .0000E+00
14  .0000E+00   15  .0000E+00   16  .0000E+00
   17  .0000E+00   18  .0000E+00   19  .0000E+00   20  .0000E+00   21  .0000E+00
22  .0000E+00   23  .0000E+00   24  .0000E+00
```

*** MODELOPTs: RegDFAULT CONC ELEV URBAN ADJ_U*

* SOURCE EMISSION RATE SCALARS WHICH VARY DIURNALLY AND BY DAY OF WEEK (HRDOW) *

SOURCE ID = L0001832 ; SOURCE TYPE = VOLUME :

```
  HOUR   SCALAR   HOUR   SCALAR   HOUR   SCALAR   HOUR   SCALAR   HOUR   SCALAR
HOUR   SCALAR   HOUR   SCALAR   HOUR   SCALAR
 - - - - - - - - - - - - - - - - - - - - - - - - - - - - - - - - - - - - - - - - -
- - - - - - - - - - - - - - - - - - - - - - - - - -
                                                DAY OF WEEK = WEEKDAY
    1  .0000E+00    2  .0000E+00    3  .0000E+00    4  .0000E+00    5  .0000E+00
6  .0000E+00    7  .1000E+01    8  .1000E+01
    9  .1000E+01   10  .1000E+01   11  .1000E+01   12  .1000E+01   13  .1000E+01
14  .1000E+01   15  .1000E+01   16  .1000E+01
   17  .0000E+00   18  .0000E+00   19  .0000E+00   20  .0000E+00   21  .0000E+00
22  .0000E+00   23  .0000E+00   24  .0000E+00
                                                DAY OF WEEK = SATURDAY
    1  .0000E+00    2  .0000E+00    3  .0000E+00    4  .0000E+00    5  .0000E+00
6  .0000E+00    7  .0000E+00    8  .0000E+00
    9  .0000E+00   10  .0000E+00   11  .0000E+00   12  .0000E+00   13  .0000E+00
14  .0000E+00   15  .0000E+00   16  .0000E+00
   17  .0000E+00   18  .0000E+00   19  .0000E+00   20  .0000E+00   21  .0000E+00
22  .0000E+00   23  .0000E+00   24  .0000E+00
                                                DAY OF WEEK = SUNDAY
    1  .0000E+00    2  .0000E+00    3  .0000E+00    4  .0000E+00    5  .0000E+00
6  .0000E+00    7  .0000E+00    8  .0000E+00
    9  .0000E+00   10  .0000E+00   11  .0000E+00   12  .0000E+00   13  .0000E+00
14  .0000E+00   15  .0000E+00   16  .0000E+00
   17  .0000E+00   18  .0000E+00   19  .0000E+00   20  .0000E+00   21  .0000E+00
22  .0000E+00   23  .0000E+00   24  .0000E+00
```

*** MODELOPTs: RegDFAULT CONC ELEV URBAN ADJ_U*

* SOURCE EMISSION RATE SCALARS WHICH VARY DIURNALLY AND BY DAY OF WEEK (HRDOW) *

SOURCE ID = L0001833 ; SOURCE TYPE = VOLUME :

```
  HOUR   SCALAR   HOUR   SCALAR   HOUR   SCALAR   HOUR   SCALAR   HOUR   SCALAR
HOUR   SCALAR   HOUR   SCALAR   HOUR   SCALAR
 - - - - - - - - - - - - - - - - - - - - - - - - - - - - - - - - - - - - - - - - -
- - - - - - - - - - - - - - - - - - - - - - - - - -
                                                DAY OF WEEK = WEEKDAY
    1  .0000E+00    2  .0000E+00    3  .0000E+00    4  .0000E+00    5  .0000E+00
6  .0000E+00    7  .1000E+01    8  .1000E+01
    9  .1000E+01   10  .1000E+01   11  .1000E+01   12  .1000E+01   13  .1000E+01
14  .1000E+01   15  .1000E+01   16  .1000E+01
   17  .0000E+00   18  .0000E+00   19  .0000E+00   20  .0000E+00   21  .0000E+00
22  .0000E+00   23  .0000E+00   24  .0000E+00
                                                DAY OF WEEK = SATURDAY
    1  .0000E+00    2  .0000E+00    3  .0000E+00    4  .0000E+00    5  .0000E+00
6  .0000E+00    7  .0000E+00    8  .0000E+00
    9  .0000E+00   10  .0000E+00   11  .0000E+00   12  .0000E+00   13  .0000E+00
14  .0000E+00   15  .0000E+00   16  .0000E+00
   17  .0000E+00   18  .0000E+00   19  .0000E+00   20  .0000E+00   21  .0000E+00
22  .0000E+00   23  .0000E+00   24  .0000E+00
                                                DAY OF WEEK = SUNDAY
    1  .0000E+00    2  .0000E+00    3  .0000E+00    4  .0000E+00    5  .0000E+00
6  .0000E+00    7  .0000E+00    8  .0000E+00
    9  .0000E+00   10  .0000E+00   11  .0000E+00   12  .0000E+00   13  .0000E+00
14  .0000E+00   15  .0000E+00   16  .0000E+00
   17  .0000E+00   18  .0000E+00   19  .0000E+00   20  .0000E+00   21  .0000E+00
22  .0000E+00   23  .0000E+00   24  .0000E+00
```

```
 *** AERMOD - VERSION 22112  ***   *** C:\Lakes\Project Files\Garvey\Garvey.isc
***        03/04/24
 *** AERMET - VERSION  16216 ***   ***
***        13:00:54

PAGE  52
 *** MODELOPTs:    RegDFAULT  CONC  ELEV  URBAN  ADJ_U*

                   * SOURCE EMISSION RATE SCALARS WHICH VARY DIURNALLY AND BY DAY
OF WEEK (HRDOW) *

 SOURCE ID = L0001834     ; SOURCE TYPE = VOLUME   :
  HOUR   SCALAR   HOUR   SCALAR   HOUR   SCALAR   HOUR   SCALAR   HOUR   SCALAR
HOUR   SCALAR   HOUR   SCALAR   HOUR   SCALAR
 - - - - - - - - - - - - - - - - - - - - - - - - - - - - - - - - - - - - - - - -
- - - - - - - - - - - - - - - - - - - - - - - - - -
                                                DAY OF WEEK = WEEKDAY
    1  .0000E+00    2  .0000E+00    3  .0000E+00    4  .0000E+00    5  .0000E+00
6  .0000E+00    7  .1000E+01    8  .1000E+01
    9  .1000E+01   10  .1000E+01   11  .1000E+01   12  .1000E+01   13  .1000E+01
14  .1000E+01   15  .1000E+01   16  .1000E+01
   17  .0000E+00   18  .0000E+00   19  .0000E+00   20  .0000E+00   21  .0000E+00
22  .0000E+00   23  .0000E+00   24  .0000E+00
                                                DAY OF WEEK = SATURDAY
    1  .0000E+00    2  .0000E+00    3  .0000E+00    4  .0000E+00    5  .0000E+00
6  .0000E+00    7  .0000E+00    8  .0000E+00
    9  .0000E+00   10  .0000E+00   11  .0000E+00   12  .0000E+00   13  .0000E+00
14  .0000E+00   15  .0000E+00   16  .0000E+00
   17  .0000E+00   18  .0000E+00   19  .0000E+00   20  .0000E+00   21  .0000E+00
22  .0000E+00   23  .0000E+00   24  .0000E+00
                                                DAY OF WEEK = SUNDAY
    1  .0000E+00    2  .0000E+00    3  .0000E+00    4  .0000E+00    5  .0000E+00
6  .0000E+00    7  .0000E+00    8  .0000E+00
    9  .0000E+00   10  .0000E+00   11  .0000E+00   12  .0000E+00   13  .0000E+00
14  .0000E+00   15  .0000E+00   16  .0000E+00
   17  .0000E+00   18  .0000E+00   19  .0000E+00   20  .0000E+00   21  .0000E+00
22  .0000E+00   23  .0000E+00   24  .0000E+00
```

```
 *** AERMOD - VERSION 22112  ***   *** C:\Lakes\Project Files\Garvey\Garvey.isc
***        03/04/24
 *** AERMET - VERSION  16216 ***   ***
***        13:00:54

PAGE  53
 *** MODELOPTs:    RegDFAULT  CONC  ELEV  URBAN  ADJ_U*

                   * SOURCE EMISSION RATE SCALARS WHICH VARY DIURNALLY AND BY DAY
OF WEEK (HRDOW) *

 SOURCE ID = L0001835     ; SOURCE TYPE = VOLUME   :
  HOUR   SCALAR   HOUR   SCALAR   HOUR   SCALAR   HOUR   SCALAR   HOUR   SCALAR
HOUR   SCALAR   HOUR   SCALAR   HOUR   SCALAR
 - - - - - - - - - - - - - - - - - - - - - - - - - - - - - - - - - - - - - - - -
- - - - - - - - - - - - - - - - - - - - - - - - - -
                                                DAY OF WEEK = WEEKDAY
    1  .0000E+00    2  .0000E+00    3  .0000E+00    4  .0000E+00    5  .0000E+00
6  .0000E+00    7  .1000E+01    8  .1000E+01
    9  .1000E+01   10  .1000E+01   11  .1000E+01   12  .1000E+01   13  .1000E+01
14  .1000E+01   15  .1000E+01   16  .1000E+01
   17  .0000E+00   18  .0000E+00   19  .0000E+00   20  .0000E+00   21  .0000E+00
22  .0000E+00   23  .0000E+00   24  .0000E+00
                                                DAY OF WEEK = SATURDAY
    1  .0000E+00    2  .0000E+00    3  .0000E+00    4  .0000E+00    5  .0000E+00
6  .0000E+00    7  .0000E+00    8  .0000E+00
    9  .0000E+00   10  .0000E+00   11  .0000E+00   12  .0000E+00   13  .0000E+00
14  .0000E+00   15  .0000E+00   16  .0000E+00
   17  .0000E+00   18  .0000E+00   19  .0000E+00   20  .0000E+00   21  .0000E+00
22  .0000E+00   23  .0000E+00   24  .0000E+00
                                                DAY OF WEEK = SUNDAY
    1  .0000E+00    2  .0000E+00    3  .0000E+00    4  .0000E+00    5  .0000E+00
6  .0000E+00    7  .0000E+00    8  .0000E+00
    9  .0000E+00   10  .0000E+00   11  .0000E+00   12  .0000E+00   13  .0000E+00
14  .0000E+00   15  .0000E+00   16  .0000E+00
   17  .0000E+00   18  .0000E+00   19  .0000E+00   20  .0000E+00   21  .0000E+00
22  .0000E+00   23  .0000E+00   24  .0000E+00
```

```
 *** AERMOD - VERSION 22112  ***   *** C:\Lakes\Project Files\Garvey\Garvey.isc
***        03/04/24
 *** AERMET - VERSION  16216 ***   ***
***        13:00:54

PAGE  54
 *** MODELOPTs:    RegDFAULT  CONC  ELEV  URBAN  ADJ_U*

                   * SOURCE EMISSION RATE SCALARS WHICH VARY DIURNALLY AND BY DAY
OF WEEK (HRDOW) *

 SOURCE ID = L0001836     ; SOURCE TYPE = VOLUME   :
  HOUR   SCALAR   HOUR   SCALAR   HOUR   SCALAR   HOUR   SCALAR   HOUR   SCALAR
HOUR   SCALAR   HOUR   SCALAR   HOUR   SCALAR
 - - - - - - - - - - - - - - - - - - - - - - - - - - - - - - - - - - - - - - - -
- - - - - - - - - - - - - - - - - - - - - - - - -
                                                DAY OF WEEK = WEEKDAY
    1  .0000E+00    2  .0000E+00    3  .0000E+00    4  .0000E+00    5  .0000E+00
6  .0000E+00    7  .1000E+01    8  .1000E+01
    9  .1000E+01   10  .1000E+01   11  .1000E+01   12  .1000E+01   13  .1000E+01
14  .1000E+01   15  .1000E+01   16  .1000E+01
   17  .0000E+00   18  .0000E+00   19  .0000E+00   20  .0000E+00   21  .0000E+00
22  .0000E+00   23  .0000E+00   24  .0000E+00
                                                DAY OF WEEK = SATURDAY
    1  .0000E+00    2  .0000E+00    3  .0000E+00    4  .0000E+00    5  .0000E+00
6  .0000E+00    7  .0000E+00    8  .0000E+00
    9  .0000E+00   10  .0000E+00   11  .0000E+00   12  .0000E+00   13  .0000E+00
14  .0000E+00   15  .0000E+00   16  .0000E+00
   17  .0000E+00   18  .0000E+00   19  .0000E+00   20  .0000E+00   21  .0000E+00
22  .0000E+00   23  .0000E+00   24  .0000E+00
                                                DAY OF WEEK = SUNDAY
    1  .0000E+00    2  .0000E+00    3  .0000E+00    4  .0000E+00    5  .0000E+00
6  .0000E+00    7  .0000E+00    8  .0000E+00
    9  .0000E+00   10  .0000E+00   11  .0000E+00   12  .0000E+00   13  .0000E+00
14  .0000E+00   15  .0000E+00   16  .0000E+00
   17  .0000E+00   18  .0000E+00   19  .0000E+00   20  .0000E+00   21  .0000E+00
22  .0000E+00   23  .0000E+00   24  .0000E+00
```

```
 *** AERMOD - VERSION 22112  ***   *** C:\Lakes\Project Files\Garvey\Garvey.isc
***        03/04/24
 *** AERMET - VERSION  16216 ***   ***
***        13:00:54

PAGE  55
 *** MODELOPTs:    RegDFAULT  CONC  ELEV  URBAN  ADJ_U*

                   * SOURCE EMISSION RATE SCALARS WHICH VARY DIURNALLY AND BY DAY
OF WEEK (HRDOW) *

 SOURCE ID = L0001837     ; SOURCE TYPE = VOLUME   :
  HOUR   SCALAR   HOUR   SCALAR   HOUR   SCALAR   HOUR   SCALAR   HOUR   SCALAR
HOUR   SCALAR   HOUR   SCALAR   HOUR   SCALAR
 - - - - - - - - - - - - - - - - - - - - - - - - - - - - - - - - - - - - - - - -
- - - - - - - - - - - - - - - - - - - - - - - - - - - - -
                                                DAY OF WEEK = WEEKDAY
    1  .0000E+00    2  .0000E+00    3  .0000E+00    4  .0000E+00    5  .0000E+00
6  .0000E+00    7  .1000E+01    8  .1000E+01
    9  .1000E+01   10  .1000E+01   11  .1000E+01   12  .1000E+01   13  .1000E+01
14  .1000E+01   15  .1000E+01   16  .1000E+01
   17  .0000E+00   18  .0000E+00   19  .0000E+00   20  .0000E+00   21  .0000E+00
22  .0000E+00   23  .0000E+00   24  .0000E+00
                                                DAY OF WEEK = SATURDAY
    1  .0000E+00    2  .0000E+00    3  .0000E+00    4  .0000E+00    5  .0000E+00
6  .0000E+00    7  .0000E+00    8  .0000E+00
    9  .0000E+00   10  .0000E+00   11  .0000E+00   12  .0000E+00   13  .0000E+00
14  .0000E+00   15  .0000E+00   16  .0000E+00
   17  .0000E+00   18  .0000E+00   19  .0000E+00   20  .0000E+00   21  .0000E+00
22  .0000E+00   23  .0000E+00   24  .0000E+00
                                                DAY OF WEEK = SUNDAY
    1  .0000E+00    2  .0000E+00    3  .0000E+00    4  .0000E+00    5  .0000E+00
6  .0000E+00    7  .0000E+00    8  .0000E+00
    9  .0000E+00   10  .0000E+00   11  .0000E+00   12  .0000E+00   13  .0000E+00
14  .0000E+00   15  .0000E+00   16  .0000E+00
   17  .0000E+00   18  .0000E+00   19  .0000E+00   20  .0000E+00   21  .0000E+00
22  .0000E+00   23  .0000E+00   24  .0000E+00
```

```
 *** AERMOD - VERSION 22112  ***   *** C:\Lakes\Project Files\Garvey\Garvey.isc
***        03/04/24
 *** AERMET - VERSION  16216 ***   ***
***        13:00:54

PAGE  56
 *** MODELOPTs:    RegDFAULT  CONC  ELEV  URBAN  ADJ_U*

                   * SOURCE EMISSION RATE SCALARS WHICH VARY DIURNALLY AND BY DAY
OF WEEK (HRDOW) *

 SOURCE ID = L0001838     ; SOURCE TYPE = VOLUME   :
  HOUR   SCALAR   HOUR   SCALAR   HOUR   SCALAR   HOUR   SCALAR   HOUR   SCALAR
HOUR   SCALAR   HOUR   SCALAR   HOUR   SCALAR
 - - - - - - - - - - - - - - - - - - - - - - - - - - - - - - - - - - - - - - - -
- - - - - - - - - - - - - - - - - - - - - - - - - -
                                                DAY OF WEEK = WEEKDAY
    1  .0000E+00    2  .0000E+00    3  .0000E+00    4  .0000E+00    5  .0000E+00
6  .0000E+00    7  .1000E+01    8  .1000E+01
    9  .1000E+01   10  .1000E+01   11  .1000E+01   12  .1000E+01   13  .1000E+01
14  .1000E+01   15  .1000E+01   16  .1000E+01
   17  .0000E+00   18  .0000E+00   19  .0000E+00   20  .0000E+00   21  .0000E+00
22  .0000E+00   23  .0000E+00   24  .0000E+00
                                                DAY OF WEEK = SATURDAY
    1  .0000E+00    2  .0000E+00    3  .0000E+00    4  .0000E+00    5  .0000E+00
6  .0000E+00    7  .0000E+00    8  .0000E+00
    9  .0000E+00   10  .0000E+00   11  .0000E+00   12  .0000E+00   13  .0000E+00
14  .0000E+00   15  .0000E+00   16  .0000E+00
   17  .0000E+00   18  .0000E+00   19  .0000E+00   20  .0000E+00   21  .0000E+00
22  .0000E+00   23  .0000E+00   24  .0000E+00
                                                DAY OF WEEK = SUNDAY
    1  .0000E+00    2  .0000E+00    3  .0000E+00    4  .0000E+00    5  .0000E+00
6  .0000E+00    7  .0000E+00    8  .0000E+00
    9  .0000E+00   10  .0000E+00   11  .0000E+00   12  .0000E+00   13  .0000E+00
14  .0000E+00   15  .0000E+00   16  .0000E+00
   17  .0000E+00   18  .0000E+00   19  .0000E+00   20  .0000E+00   21  .0000E+00
22  .0000E+00   23  .0000E+00   24  .0000E+00
```

```
 *** AERMOD - VERSION 22112  ***   *** C:\Lakes\Project Files\Garvey\Garvey.isc
***        03/04/24
 *** AERMET - VERSION  16216 ***   ***
***        13:00:54

PAGE  57
 *** MODELOPTs:    RegDFAULT  CONC  ELEV  URBAN  ADJ_U*

                   * SOURCE EMISSION RATE SCALARS WHICH VARY DIURNALLY AND BY DAY
OF WEEK (HRDOW) *

 SOURCE ID = L0001839     ; SOURCE TYPE = VOLUME   :
  HOUR   SCALAR   HOUR   SCALAR   HOUR   SCALAR   HOUR   SCALAR   HOUR   SCALAR
HOUR   SCALAR   HOUR   SCALAR   HOUR   SCALAR
 - - - - - - - - - - - - - - - - - - - - - - - - - - - - - - - - - - - - - - - -
- - - - - - - - - - - - - - - - - - - - - - - - -
                                                DAY OF WEEK = WEEKDAY
    1  .0000E+00    2  .0000E+00    3  .0000E+00    4  .0000E+00    5  .0000E+00
6  .0000E+00    7  .1000E+01    8  .1000E+01
    9  .1000E+01   10  .1000E+01   11  .1000E+01   12  .1000E+01   13  .1000E+01
14  .1000E+01   15  .1000E+01   16  .1000E+01
   17  .0000E+00   18  .0000E+00   19  .0000E+00   20  .0000E+00   21  .0000E+00
22  .0000E+00   23  .0000E+00   24  .0000E+00
                                                DAY OF WEEK = SATURDAY
    1  .0000E+00    2  .0000E+00    3  .0000E+00    4  .0000E+00    5  .0000E+00
6  .0000E+00    7  .0000E+00    8  .0000E+00
    9  .0000E+00   10  .0000E+00   11  .0000E+00   12  .0000E+00   13  .0000E+00
14  .0000E+00   15  .0000E+00   16  .0000E+00
   17  .0000E+00   18  .0000E+00   19  .0000E+00   20  .0000E+00   21  .0000E+00
22  .0000E+00   23  .0000E+00   24  .0000E+00
                                                DAY OF WEEK = SUNDAY
    1  .0000E+00    2  .0000E+00    3  .0000E+00    4  .0000E+00    5  .0000E+00
6  .0000E+00    7  .0000E+00    8  .0000E+00
    9  .0000E+00   10  .0000E+00   11  .0000E+00   12  .0000E+00   13  .0000E+00
14  .0000E+00   15  .0000E+00   16  .0000E+00
   17  .0000E+00   18  .0000E+00   19  .0000E+00   20  .0000E+00   21  .0000E+00
22  .0000E+00   23  .0000E+00   24  .0000E+00
```

```
 *** AERMOD - VERSION 22112  ***   *** C:\Lakes\Project Files\Garvey\Garvey.isc
***        03/04/24
 *** AERMET - VERSION  16216 ***   ***
***        13:00:54

PAGE  58
 *** MODELOPTs:    RegDFAULT  CONC  ELEV  URBAN  ADJ_U*

                   * SOURCE EMISSION RATE SCALARS WHICH VARY DIURNALLY AND BY DAY
OF WEEK (HRDOW) *

 SOURCE ID = L0001840     ; SOURCE TYPE = VOLUME   :
  HOUR   SCALAR   HOUR   SCALAR   HOUR   SCALAR   HOUR   SCALAR   HOUR   SCALAR
HOUR   SCALAR   HOUR   SCALAR   HOUR   SCALAR
 - - - - - - - - - - - - - - - - - - - - - - - - - - - - - - - - - - - - - - - -
- - - - - - - - - - - - - - - - - - - - - - - - - -
                                                DAY OF WEEK = WEEKDAY
    1  .0000E+00    2  .0000E+00    3  .0000E+00    4  .0000E+00    5  .0000E+00
6  .0000E+00    7  .1000E+01    8  .1000E+01
    9  .1000E+01   10  .1000E+01   11  .1000E+01   12  .1000E+01   13  .1000E+01
14  .1000E+01   15  .1000E+01   16  .1000E+01
   17  .0000E+00   18  .0000E+00   19  .0000E+00   20  .0000E+00   21  .0000E+00
22  .0000E+00   23  .0000E+00   24  .0000E+00
                                                DAY OF WEEK = SATURDAY
    1  .0000E+00    2  .0000E+00    3  .0000E+00    4  .0000E+00    5  .0000E+00
6  .0000E+00    7  .0000E+00    8  .0000E+00
    9  .0000E+00   10  .0000E+00   11  .0000E+00   12  .0000E+00   13  .0000E+00
14  .0000E+00   15  .0000E+00   16  .0000E+00
   17  .0000E+00   18  .0000E+00   19  .0000E+00   20  .0000E+00   21  .0000E+00
22  .0000E+00   23  .0000E+00   24  .0000E+00
                                                DAY OF WEEK = SUNDAY
    1  .0000E+00    2  .0000E+00    3  .0000E+00    4  .0000E+00    5  .0000E+00
6  .0000E+00    7  .0000E+00    8  .0000E+00
    9  .0000E+00   10  .0000E+00   11  .0000E+00   12  .0000E+00   13  .0000E+00
14  .0000E+00   15  .0000E+00   16  .0000E+00
   17  .0000E+00   18  .0000E+00   19  .0000E+00   20  .0000E+00   21  .0000E+00
22  .0000E+00   23  .0000E+00   24  .0000E+00
```

```
                    * SOURCE EMISSION RATE SCALARS WHICH VARY DIURNALLY AND BY DAY
OF WEEK (HRDOW) *

 SOURCE ID = L0001841     ; SOURCE TYPE = VOLUME   :
  HOUR   SCALAR   HOUR   SCALAR   HOUR   SCALAR   HOUR   SCALAR   HOUR   SCALAR
HOUR   SCALAR   HOUR   SCALAR   HOUR   SCALAR
 - - - - - - - - - - - - - - - - - - - - - - - - - - - - - - - - - - - - - - - -
- - - - - - - - - - - - - - - - - - - - - - - - -
                                                DAY OF WEEK = WEEKDAY
    1  .0000E+00    2  .0000E+00    3  .0000E+00    4  .0000E+00    5  .0000E+00
6  .0000E+00    7  .1000E+01    8  .1000E+01
    9  .1000E+01   10  .1000E+01   11  .1000E+01   12  .1000E+01   13  .1000E+01
14  .1000E+01   15  .1000E+01   16  .1000E+01
   17  .0000E+00   18  .0000E+00   19  .0000E+00   20  .0000E+00   21  .0000E+00
22  .0000E+00   23  .0000E+00   24  .0000E+00
                                                DAY OF WEEK = SATURDAY
    1  .0000E+00    2  .0000E+00    3  .0000E+00    4  .0000E+00    5  .0000E+00
6  .0000E+00    7  .0000E+00    8  .0000E+00
    9  .0000E+00   10  .0000E+00   11  .0000E+00   12  .0000E+00   13  .0000E+00
14  .0000E+00   15  .0000E+00   16  .0000E+00
   17  .0000E+00   18  .0000E+00   19  .0000E+00   20  .0000E+00   21  .0000E+00
22  .0000E+00   23  .0000E+00   24  .0000E+00
                                                DAY OF WEEK = SUNDAY
    1  .0000E+00    2  .0000E+00    3  .0000E+00    4  .0000E+00    5  .0000E+00
6  .0000E+00    7  .0000E+00    8  .0000E+00
    9  .0000E+00   10  .0000E+00   11  .0000E+00   12  .0000E+00   13  .0000E+00
14  .0000E+00   15  .0000E+00   16  .0000E+00
   17  .0000E+00   18  .0000E+00   19  .0000E+00   20  .0000E+00   21  .0000E+00
22  .0000E+00   23  .0000E+00   24  .0000E+00
```

```
 *** AERMOD - VERSION 22112  ***   *** C:\Lakes\Project Files\Garvey\Garvey.isc
***        03/04/24
 *** AERMET - VERSION  16216 ***   ***
***        13:00:54

PAGE  60
 *** MODELOPTs:    RegDFAULT  CONC  ELEV  URBAN  ADJ_U*

                   * SOURCE EMISSION RATE SCALARS WHICH VARY DIURNALLY AND BY DAY
OF WEEK (HRDOW) *

 SOURCE ID = L0001842     ; SOURCE TYPE = VOLUME   :
  HOUR   SCALAR   HOUR   SCALAR   HOUR   SCALAR   HOUR   SCALAR   HOUR   SCALAR
HOUR   SCALAR   HOUR   SCALAR   HOUR   SCALAR
 - - - - - - - - - - - - - - - - - - - - - - - - - - - - - - - - - - - - - - - -
- - - - - - - - - - - - - - - - - - - - - - - - - -
                                                DAY OF WEEK = WEEKDAY
    1  .0000E+00    2  .0000E+00    3  .0000E+00    4  .0000E+00    5  .0000E+00
6  .0000E+00    7  .1000E+01    8  .1000E+01
    9  .1000E+01   10  .1000E+01   11  .1000E+01   12  .1000E+01   13  .1000E+01
14  .1000E+01   15  .1000E+01   16  .1000E+01
   17  .0000E+00   18  .0000E+00   19  .0000E+00   20  .0000E+00   21  .0000E+00
22  .0000E+00   23  .0000E+00   24  .0000E+00
                                                DAY OF WEEK = SATURDAY
    1  .0000E+00    2  .0000E+00    3  .0000E+00    4  .0000E+00    5  .0000E+00
6  .0000E+00    7  .0000E+00    8  .0000E+00
    9  .0000E+00   10  .0000E+00   11  .0000E+00   12  .0000E+00   13  .0000E+00
14  .0000E+00   15  .0000E+00   16  .0000E+00
   17  .0000E+00   18  .0000E+00   19  .0000E+00   20  .0000E+00   21  .0000E+00
22  .0000E+00   23  .0000E+00   24  .0000E+00
                                                DAY OF WEEK = SUNDAY
    1  .0000E+00    2  .0000E+00    3  .0000E+00    4  .0000E+00    5  .0000E+00
6  .0000E+00    7  .0000E+00    8  .0000E+00
    9  .0000E+00   10  .0000E+00   11  .0000E+00   12  .0000E+00   13  .0000E+00
14  .0000E+00   15  .0000E+00   16  .0000E+00
   17  .0000E+00   18  .0000E+00   19  .0000E+00   20  .0000E+00   21  .0000E+00
22  .0000E+00   23  .0000E+00   24  .0000E+00
```

```
 *** AERMOD - VERSION 22112  ***   *** C:\Lakes\Project Files\Garvey\Garvey.isc
***        03/04/24
 *** AERMET - VERSION  16216 ***   ***
***        13:00:54

PAGE  61
 *** MODELOPTs:    RegDFAULT  CONC  ELEV  URBAN  ADJ_U*

                   * SOURCE EMISSION RATE SCALARS WHICH VARY DIURNALLY AND BY DAY
OF WEEK (HRDOW) *

 SOURCE ID = L0001843     ; SOURCE TYPE = VOLUME   :
  HOUR   SCALAR   HOUR   SCALAR   HOUR   SCALAR   HOUR   SCALAR   HOUR   SCALAR
HOUR   SCALAR   HOUR   SCALAR   HOUR   SCALAR
 - - - - - - - - - - - - - - - - - - - - - - - - - - - - - - - - - - - - - - - -
- - - - - - - - - - - - - - - - - - - - - - - - - -
                                                DAY OF WEEK = WEEKDAY
    1  .0000E+00    2  .0000E+00    3  .0000E+00    4  .0000E+00    5  .0000E+00
6  .0000E+00    7  .1000E+01    8  .1000E+01
    9  .1000E+01   10  .1000E+01   11  .1000E+01   12  .1000E+01   13  .1000E+01
14  .1000E+01   15  .1000E+01   16  .1000E+01
   17  .0000E+00   18  .0000E+00   19  .0000E+00   20  .0000E+00   21  .0000E+00
22  .0000E+00   23  .0000E+00   24  .0000E+00
                                                DAY OF WEEK = SATURDAY
    1  .0000E+00    2  .0000E+00    3  .0000E+00    4  .0000E+00    5  .0000E+00
6  .0000E+00    7  .0000E+00    8  .0000E+00
    9  .0000E+00   10  .0000E+00   11  .0000E+00   12  .0000E+00   13  .0000E+00
14  .0000E+00   15  .0000E+00   16  .0000E+00
   17  .0000E+00   18  .0000E+00   19  .0000E+00   20  .0000E+00   21  .0000E+00
22  .0000E+00   23  .0000E+00   24  .0000E+00
                                                DAY OF WEEK = SUNDAY
    1  .0000E+00    2  .0000E+00    3  .0000E+00    4  .0000E+00    5  .0000E+00
6  .0000E+00    7  .0000E+00    8  .0000E+00
    9  .0000E+00   10  .0000E+00   11  .0000E+00   12  .0000E+00   13  .0000E+00
14  .0000E+00   15  .0000E+00   16  .0000E+00
   17  .0000E+00   18  .0000E+00   19  .0000E+00   20  .0000E+00   21  .0000E+00
22  .0000E+00   23  .0000E+00   24  .0000E+00
```

```
 *** AERMOD - VERSION 22112  ***   *** C:\Lakes\Project Files\Garvey\Garvey.isc
***        03/04/24
 *** AERMET - VERSION  16216 ***   ***
***        13:00:54

PAGE  62
 *** MODELOPTs:    RegDFAULT  CONC  ELEV  URBAN  ADJ_U*

                   * SOURCE EMISSION RATE SCALARS WHICH VARY DIURNALLY AND BY DAY
OF WEEK (HRDOW) *

 SOURCE ID = L0001844     ; SOURCE TYPE = VOLUME   :
  HOUR   SCALAR   HOUR   SCALAR   HOUR   SCALAR   HOUR   SCALAR   HOUR   SCALAR
HOUR   SCALAR   HOUR   SCALAR   HOUR   SCALAR
 - - - - - - - - - - - - - - - - - - - - - - - - - - - - - - - - - - - - - - - -
- - - - - - - - - - - - - - - - - - - - - - - - -
                                                DAY OF WEEK = WEEKDAY
    1  .0000E+00    2  .0000E+00    3  .0000E+00    4  .0000E+00    5  .0000E+00
6  .0000E+00    7  .1000E+01    8  .1000E+01
    9  .1000E+01   10  .1000E+01   11  .1000E+01   12  .1000E+01   13  .1000E+01
14  .1000E+01   15  .1000E+01   16  .1000E+01
   17  .0000E+00   18  .0000E+00   19  .0000E+00   20  .0000E+00   21  .0000E+00
22  .0000E+00   23  .0000E+00   24  .0000E+00
                                                DAY OF WEEK = SATURDAY
    1  .0000E+00    2  .0000E+00    3  .0000E+00    4  .0000E+00    5  .0000E+00
6  .0000E+00    7  .0000E+00    8  .0000E+00
    9  .0000E+00   10  .0000E+00   11  .0000E+00   12  .0000E+00   13  .0000E+00
14  .0000E+00   15  .0000E+00   16  .0000E+00
   17  .0000E+00   18  .0000E+00   19  .0000E+00   20  .0000E+00   21  .0000E+00
22  .0000E+00   23  .0000E+00   24  .0000E+00
                                                DAY OF WEEK = SUNDAY
    1  .0000E+00    2  .0000E+00    3  .0000E+00    4  .0000E+00    5  .0000E+00
6  .0000E+00    7  .0000E+00    8  .0000E+00
    9  .0000E+00   10  .0000E+00   11  .0000E+00   12  .0000E+00   13  .0000E+00
14  .0000E+00   15  .0000E+00   16  .0000E+00
   17  .0000E+00   18  .0000E+00   19  .0000E+00   20  .0000E+00   21  .0000E+00
22  .0000E+00   23  .0000E+00   24  .0000E+00
```

```
 *** AERMOD - VERSION 22112  ***   *** C:\Lakes\Project Files\Garvey\Garvey.isc
***        03/04/24
 *** AERMET - VERSION  16216 ***   ***
***        13:00:54

PAGE  63
 *** MODELOPTs:    RegDFAULT  CONC  ELEV  URBAN  ADJ_U*

                   * SOURCE EMISSION RATE SCALARS WHICH VARY DIURNALLY AND BY DAY
OF WEEK (HRDOW) *

 SOURCE ID = JS           ; SOURCE TYPE = VOLUME   :
  HOUR   SCALAR   HOUR   SCALAR   HOUR   SCALAR   HOUR   SCALAR   HOUR   SCALAR
HOUR   SCALAR   HOUR   SCALAR   HOUR   SCALAR
 - - - - - - - - - - - - - - - - - - - - - - - - - - - - - - - - - - - - - - - -
- - - - - - - - - - - - - - - - - - - - - - - - - - - - -
                                                DAY OF WEEK = WEEKDAY
    1  .0000E+00    2  .0000E+00    3  .0000E+00    4  .0000E+00    5  .0000E+00
6  .0000E+00    7  .1000E+01    8  .1000E+01
    9  .1000E+01   10  .1000E+01   11  .1000E+01   12  .1000E+01   13  .1000E+01
14  .1000E+01   15  .1000E+01   16  .1000E+01
   17  .0000E+00   18  .0000E+00   19  .0000E+00   20  .0000E+00   21  .0000E+00
22  .0000E+00   23  .0000E+00   24  .0000E+00
                                                DAY OF WEEK = SATURDAY
    1  .0000E+00    2  .0000E+00    3  .0000E+00    4  .0000E+00    5  .0000E+00
6  .0000E+00    7  .0000E+00    8  .0000E+00
    9  .0000E+00   10  .0000E+00   11  .0000E+00   12  .0000E+00   13  .0000E+00
14  .0000E+00   15  .0000E+00   16  .0000E+00
   17  .0000E+00   18  .0000E+00   19  .0000E+00   20  .0000E+00   21  .0000E+00
22  .0000E+00   23  .0000E+00   24  .0000E+00
                                                DAY OF WEEK = SUNDAY
    1  .0000E+00    2  .0000E+00    3  .0000E+00    4  .0000E+00    5  .0000E+00
6  .0000E+00    7  .0000E+00    8  .0000E+00
    9  .0000E+00   10  .0000E+00   11  .0000E+00   12  .0000E+00   13  .0000E+00
14  .0000E+00   15  .0000E+00   16  .0000E+00
   17  .0000E+00   18  .0000E+00   19  .0000E+00   20  .0000E+00   21  .0000E+00
22  .0000E+00   23  .0000E+00   24  .0000E+00
```

```
 *** AERMOD - VERSION 22112  ***   *** C:\Lakes\Project Files\Garvey\Garvey.isc
***        03/04/24
 *** AERMET - VERSION  16216 ***   ***
***        13:00:54

PAGE  64
 *** MODELOPTs:    RegDFAULT  CONC  ELEV  URBAN  ADJ_U*

                   * SOURCE EMISSION RATE SCALARS WHICH VARY DIURNALLY AND BY DAY
OF WEEK (HRDOW) *

 SOURCE ID = FES          ; SOURCE TYPE = VOLUME   :
  HOUR   SCALAR   HOUR   SCALAR   HOUR   SCALAR   HOUR   SCALAR   HOUR   SCALAR
HOUR   SCALAR   HOUR   SCALAR   HOUR   SCALAR
 - - - - - - - - - - - - - - - - - - - - - - - - - - - - - - - - - - - - - - - -
- - - - - - - - - - - - - - - - - - - - - - - - - -
                                                  DAY OF WEEK = WEEKDAY
    1  .0000E+00    2  .0000E+00    3  .0000E+00    4  .0000E+00    5  .0000E+00
6  .0000E+00    7  .1000E+01    8  .1000E+01
    9  .1000E+01   10  .1000E+01   11  .1000E+01   12  .1000E+01   13  .1000E+01
14  .1000E+01   15  .1000E+01   16  .1000E+01
   17  .0000E+00   18  .0000E+00   19  .0000E+00   20  .0000E+00   21  .0000E+00
22  .0000E+00   23  .0000E+00   24  .0000E+00
                                                  DAY OF WEEK = SATURDAY
    1  .0000E+00    2  .0000E+00    3  .0000E+00    4  .0000E+00    5  .0000E+00
6  .0000E+00    7  .0000E+00    8  .0000E+00
    9  .0000E+00   10  .0000E+00   11  .0000E+00   12  .0000E+00   13  .0000E+00
14  .0000E+00   15  .0000E+00   16  .0000E+00
   17  .0000E+00   18  .0000E+00   19  .0000E+00   20  .0000E+00   21  .0000E+00
22  .0000E+00   23  .0000E+00   24  .0000E+00
                                                  DAY OF WEEK = SUNDAY
    1  .0000E+00    2  .0000E+00    3  .0000E+00    4  .0000E+00    5  .0000E+00
6  .0000E+00    7  .0000E+00    8  .0000E+00
    9  .0000E+00   10  .0000E+00   11  .0000E+00   12  .0000E+00   13  .0000E+00
14  .0000E+00   15  .0000E+00   16  .0000E+00
   17  .0000E+00   18  .0000E+00   19  .0000E+00   20  .0000E+00   21  .0000E+00
22  .0000E+00   23  .0000E+00   24  .0000E+00
```

```
 *** AERMOD - VERSION 22112  ***   *** C:\Lakes\Project Files\Garvey\Garvey.isc
***        03/04/24
 *** AERMET - VERSION  16216 ***   ***
***        13:00:54

PAGE  65
 *** MODELOPTs:    RegDFAULT  CONC  ELEV  URBAN  ADJ_U*

                   * SOURCE EMISSION RATE SCALARS WHICH VARY DIURNALLY AND BY DAY
OF WEEK (HRDOW) *

 SOURCE ID = EG           ; SOURCE TYPE = VOLUME   :
  HOUR   SCALAR   HOUR   SCALAR   HOUR   SCALAR   HOUR   SCALAR   HOUR   SCALAR
HOUR   SCALAR   HOUR   SCALAR   HOUR   SCALAR
 - - - - - - - - - - - - - - - - - - - - - - - - - - - - - - - - - - - - - - - -
- - - - - - - - - - - - - - - - - - - - - - - - - -
                                                DAY OF WEEK = WEEKDAY
    1  .0000E+00    2  .0000E+00    3  .0000E+00    4  .0000E+00    5  .0000E+00
6  .0000E+00    7  .1000E+01    8  .1000E+01
    9  .1000E+01   10  .1000E+01   11  .1000E+01   12  .1000E+01   13  .1000E+01
14  .1000E+01   15  .1000E+01   16  .1000E+01
   17  .0000E+00   18  .0000E+00   19  .0000E+00   20  .0000E+00   21  .0000E+00
22  .0000E+00   23  .0000E+00   24  .0000E+00
                                                DAY OF WEEK = SATURDAY
    1  .0000E+00    2  .0000E+00    3  .0000E+00    4  .0000E+00    5  .0000E+00
6  .0000E+00    7  .0000E+00    8  .0000E+00
    9  .0000E+00   10  .0000E+00   11  .0000E+00   12  .0000E+00   13  .0000E+00
14  .0000E+00   15  .0000E+00   16  .0000E+00
   17  .0000E+00   18  .0000E+00   19  .0000E+00   20  .0000E+00   21  .0000E+00
22  .0000E+00   23  .0000E+00   24  .0000E+00
                                                DAY OF WEEK = SUNDAY
    1  .0000E+00    2  .0000E+00    3  .0000E+00    4  .0000E+00    5  .0000E+00
6  .0000E+00    7  .0000E+00    8  .0000E+00
    9  .0000E+00   10  .0000E+00   11  .0000E+00   12  .0000E+00   13  .0000E+00
14  .0000E+00   15  .0000E+00   16  .0000E+00
   17  .0000E+00   18  .0000E+00   19  .0000E+00   20  .0000E+00   21  .0000E+00
22  .0000E+00   23  .0000E+00   24  .0000E+00
```

*** MODELOPTs: RegDFAULT CONC ELEV URBAN ADJ_U*

* SOURCE EMISSION RATE SCALARS WHICH VARY DIURNALLY AND BY DAY OF WEEK (HRDOW) *

SOURCE ID = STT ; SOURCE TYPE = VOLUME :

```
  HOUR   SCALAR   HOUR   SCALAR   HOUR   SCALAR   HOUR   SCALAR   HOUR   SCALAR
HOUR   SCALAR   HOUR   SCALAR   HOUR   SCALAR
 - - - - - - - - - - - - - - - - - - - - - - - - - - - - - - - - - - - - - - - - -
- - - - - - - - - - - - - - - - - - - - - - - - - -
                                                  DAY OF WEEK = WEEKDAY
    1  .0000E+00    2  .0000E+00    3  .0000E+00    4  .0000E+00    5  .0000E+00
6  .0000E+00    7  .1000E+01    8  .1000E+01
    9  .1000E+01   10  .1000E+01   11  .1000E+01   12  .1000E+01   13  .1000E+01
14  .1000E+01   15  .1000E+01   16  .1000E+01
   17  .0000E+00   18  .0000E+00   19  .0000E+00   20  .0000E+00   21  .0000E+00
22  .0000E+00   23  .0000E+00   24  .0000E+00
                                                  DAY OF WEEK = SATURDAY
    1  .0000E+00    2  .0000E+00    3  .0000E+00    4  .0000E+00    5  .0000E+00
6  .0000E+00    7  .0000E+00    8  .0000E+00
    9  .0000E+00   10  .0000E+00   11  .0000E+00   12  .0000E+00   13  .0000E+00
14  .0000E+00   15  .0000E+00   16  .0000E+00
   17  .0000E+00   18  .0000E+00   19  .0000E+00   20  .0000E+00   21  .0000E+00
22  .0000E+00   23  .0000E+00   24  .0000E+00
                                                  DAY OF WEEK = SUNDAY
    1  .0000E+00    2  .0000E+00    3  .0000E+00    4  .0000E+00    5  .0000E+00
6  .0000E+00    7  .0000E+00    8  .0000E+00
    9  .0000E+00   10  .0000E+00   11  .0000E+00   12  .0000E+00   13  .0000E+00
14  .0000E+00   15  .0000E+00   16  .0000E+00
   17  .0000E+00   18  .0000E+00   19  .0000E+00   20  .0000E+00   21  .0000E+00
22  .0000E+00   23  .0000E+00   24  .0000E+00
```

*** MODELOPTs: RegDFAULT CONC ELEV URBAN ADJ_U*

* SOURCE EMISSION RATE SCALARS WHICH VARY DIURNALLY AND BY DAY OF WEEK (HRDOW) *

SOURCE ID = ABWQL ; SOURCE TYPE = VOLUME :

```
  HOUR   SCALAR   HOUR   SCALAR   HOUR   SCALAR   HOUR   SCALAR   HOUR   SCALAR
HOUR   SCALAR   HOUR   SCALAR   HOUR   SCALAR
 - - - - - - - - - - - - - - - - - - - - - - - - - - - - - - - - - - - - - - - - -
- - - - - - - - - - - - - - - - - - - - - - - - - -
                                                DAY OF WEEK = WEEKDAY
    1  .0000E+00    2  .0000E+00    3  .0000E+00    4  .0000E+00    5  .0000E+00
6  .0000E+00    7  .1000E+01    8  .1000E+01
    9  .1000E+01   10  .1000E+01   11  .1000E+01   12  .1000E+01   13  .1000E+01
14  .1000E+01   15  .1000E+01   16  .1000E+01
   17  .0000E+00   18  .0000E+00   19  .0000E+00   20  .0000E+00   21  .0000E+00
22  .0000E+00   23  .0000E+00   24  .0000E+00
                                                DAY OF WEEK = SATURDAY
    1  .0000E+00    2  .0000E+00    3  .0000E+00    4  .0000E+00    5  .0000E+00
6  .0000E+00    7  .0000E+00    8  .0000E+00
    9  .0000E+00   10  .0000E+00   11  .0000E+00   12  .0000E+00   13  .0000E+00
14  .0000E+00   15  .0000E+00   16  .0000E+00
   17  .0000E+00   18  .0000E+00   19  .0000E+00   20  .0000E+00   21  .0000E+00
22  .0000E+00   23  .0000E+00   24  .0000E+00
                                                DAY OF WEEK = SUNDAY
    1  .0000E+00    2  .0000E+00    3  .0000E+00    4  .0000E+00    5  .0000E+00
6  .0000E+00    7  .0000E+00    8  .0000E+00
    9  .0000E+00   10  .0000E+00   11  .0000E+00   12  .0000E+00   13  .0000E+00
14  .0000E+00   15  .0000E+00   16  .0000E+00
   17  .0000E+00   18  .0000E+00   19  .0000E+00   20  .0000E+00   21  .0000E+00
22  .0000E+00   23  .0000E+00   24  .0000E+00
```

*** MODELOPTs: RegDFAULT CONC ELEV URBAN ADJ_U*

* SOURCE EMISSION RATE SCALARS WHICH VARY DIURNALLY AND BY DAY OF WEEK (HRDOW) *

SOURCE ID = PS ; SOURCE TYPE = VOLUME :

```
  HOUR   SCALAR   HOUR   SCALAR   HOUR   SCALAR   HOUR   SCALAR   HOUR   SCALAR
HOUR   SCALAR   HOUR   SCALAR   HOUR   SCALAR
 - - - - - - - - - - - - - - - - - - - - - - - - - - - - - - - - - - - - - - - - -
- - - - - - - - - - - - - - - - - - - - - - - - - -
                                                  DAY OF WEEK = WEEKDAY
    1  .0000E+00    2  .0000E+00    3  .0000E+00    4  .0000E+00    5  .0000E+00
6  .0000E+00    7  .1000E+01    8  .1000E+01
    9  .1000E+01   10  .1000E+01   11  .1000E+01   12  .1000E+01   13  .1000E+01
14  .1000E+01   15  .1000E+01   16  .1000E+01
   17  .0000E+00   18  .0000E+00   19  .0000E+00   20  .0000E+00   21  .0000E+00
22  .0000E+00   23  .0000E+00   24  .0000E+00
                                                  DAY OF WEEK = SATURDAY
    1  .0000E+00    2  .0000E+00    3  .0000E+00    4  .0000E+00    5  .0000E+00
6  .0000E+00    7  .0000E+00    8  .0000E+00
    9  .0000E+00   10  .0000E+00   11  .0000E+00   12  .0000E+00   13  .0000E+00
14  .0000E+00   15  .0000E+00   16  .0000E+00
   17  .0000E+00   18  .0000E+00   19  .0000E+00   20  .0000E+00   21  .0000E+00
22  .0000E+00   23  .0000E+00   24  .0000E+00
                                                  DAY OF WEEK = SUNDAY
    1  .0000E+00    2  .0000E+00    3  .0000E+00    4  .0000E+00    5  .0000E+00
6  .0000E+00    7  .0000E+00    8  .0000E+00
    9  .0000E+00   10  .0000E+00   11  .0000E+00   12  .0000E+00   13  .0000E+00
14  .0000E+00   15  .0000E+00   16  .0000E+00
   17  .0000E+00   18  .0000E+00   19  .0000E+00   20  .0000E+00   21  .0000E+00
22  .0000E+00   23  .0000E+00   24  .0000E+00
```

```
 *** AERMOD - VERSION 22112  ***   *** C:\Lakes\Project Files\Garvey\Garvey.isc
***        03/04/24
 *** AERMET - VERSION  16216 ***   ***
***        13:00:54

PAGE  69
 *** MODELOPTs:    RegDFAULT  CONC  ELEV  URBAN  ADJ_U*

                   * SOURCE EMISSION RATE SCALARS WHICH VARY DIURNALLY AND BY DAY
OF WEEK (HRDOW) *

 SOURCE ID = L0001845     ; SOURCE TYPE = VOLUME   :
  HOUR   SCALAR   HOUR   SCALAR   HOUR   SCALAR   HOUR   SCALAR   HOUR   SCALAR
HOUR   SCALAR   HOUR   SCALAR   HOUR   SCALAR
 - - - - - - - - - - - - - - - - - - - - - - - - - - - - - - - - - - - - - - - -
- - - - - - - - - - - - - - - - - - - - - - - - - -
                                                DAY OF WEEK = WEEKDAY
    1  .0000E+00    2  .0000E+00    3  .0000E+00    4  .0000E+00    5  .0000E+00
6  .0000E+00    7  .1000E+01    8  .1000E+01
    9  .1000E+01   10  .1000E+01   11  .1000E+01   12  .1000E+01   13  .1000E+01
14  .1000E+01   15  .1000E+01   16  .1000E+01
   17  .0000E+00   18  .0000E+00   19  .0000E+00   20  .0000E+00   21  .0000E+00
22  .0000E+00   23  .0000E+00   24  .0000E+00
                                                DAY OF WEEK = SATURDAY
    1  .0000E+00    2  .0000E+00    3  .0000E+00    4  .0000E+00    5  .0000E+00
6  .0000E+00    7  .0000E+00    8  .0000E+00
    9  .0000E+00   10  .0000E+00   11  .0000E+00   12  .0000E+00   13  .0000E+00
14  .0000E+00   15  .0000E+00   16  .0000E+00
   17  .0000E+00   18  .0000E+00   19  .0000E+00   20  .0000E+00   21  .0000E+00
22  .0000E+00   23  .0000E+00   24  .0000E+00
                                                DAY OF WEEK = SUNDAY
    1  .0000E+00    2  .0000E+00    3  .0000E+00    4  .0000E+00    5  .0000E+00
6  .0000E+00    7  .0000E+00    8  .0000E+00
    9  .0000E+00   10  .0000E+00   11  .0000E+00   12  .0000E+00   13  .0000E+00
14  .0000E+00   15  .0000E+00   16  .0000E+00
   17  .0000E+00   18  .0000E+00   19  .0000E+00   20  .0000E+00   21  .0000E+00
22  .0000E+00   23  .0000E+00   24  .0000E+00
```

*** MODELOPTs: RegDFAULT CONC ELEV URBAN ADJ_U*

* SOURCE EMISSION RATE SCALARS WHICH VARY DIURNALLY AND BY DAY OF WEEK (HRDOW) *

SOURCE ID = L0001846 ; SOURCE TYPE = VOLUME :

```
  HOUR   SCALAR   HOUR   SCALAR   HOUR   SCALAR   HOUR   SCALAR   HOUR   SCALAR
HOUR   SCALAR   HOUR   SCALAR   HOUR   SCALAR
 - - - - - - - - - - - - - - - - - - - - - - - - - - - - - - - - - - - - - - - - -
- - - - - - - - - - - - - - - - - - - - - - - - - -
                                                DAY OF WEEK = WEEKDAY
    1  .0000E+00    2  .0000E+00    3  .0000E+00    4  .0000E+00    5  .0000E+00
6  .0000E+00    7  .1000E+01    8  .1000E+01
    9  .1000E+01   10  .1000E+01   11  .1000E+01   12  .1000E+01   13  .1000E+01
14  .1000E+01   15  .1000E+01   16  .1000E+01
   17  .0000E+00   18  .0000E+00   19  .0000E+00   20  .0000E+00   21  .0000E+00
22  .0000E+00   23  .0000E+00   24  .0000E+00
                                                DAY OF WEEK = SATURDAY
    1  .0000E+00    2  .0000E+00    3  .0000E+00    4  .0000E+00    5  .0000E+00
6  .0000E+00    7  .0000E+00    8  .0000E+00
    9  .0000E+00   10  .0000E+00   11  .0000E+00   12  .0000E+00   13  .0000E+00
14  .0000E+00   15  .0000E+00   16  .0000E+00
   17  .0000E+00   18  .0000E+00   19  .0000E+00   20  .0000E+00   21  .0000E+00
22  .0000E+00   23  .0000E+00   24  .0000E+00
                                                DAY OF WEEK = SUNDAY
    1  .0000E+00    2  .0000E+00    3  .0000E+00    4  .0000E+00    5  .0000E+00
6  .0000E+00    7  .0000E+00    8  .0000E+00
    9  .0000E+00   10  .0000E+00   11  .0000E+00   12  .0000E+00   13  .0000E+00
14  .0000E+00   15  .0000E+00   16  .0000E+00
   17  .0000E+00   18  .0000E+00   19  .0000E+00   20  .0000E+00   21  .0000E+00
22  .0000E+00   23  .0000E+00   24  .0000E+00
```

```
 *** AERMOD - VERSION 22112  ***   *** C:\Lakes\Project Files\Garvey\Garvey.isc
***        03/04/24
 *** AERMET - VERSION  16216 ***   ***
***        13:00:54

PAGE  71
 *** MODELOPTs:    RegDFAULT  CONC  ELEV  URBAN  ADJ_U*

                   * SOURCE EMISSION RATE SCALARS WHICH VARY DIURNALLY AND BY DAY
OF WEEK (HRDOW) *

 SOURCE ID = L0001847     ; SOURCE TYPE = VOLUME   :
  HOUR   SCALAR   HOUR   SCALAR   HOUR   SCALAR   HOUR   SCALAR   HOUR   SCALAR
HOUR   SCALAR   HOUR   SCALAR   HOUR   SCALAR
 - - - - - - - - - - - - - - - - - - - - - - - - - - - - - - - - - - - - - - - -
- - - - - - - - - - - - - - - - - - - - - - - - -
                                                DAY OF WEEK = WEEKDAY
    1  .0000E+00    2  .0000E+00    3  .0000E+00    4  .0000E+00    5  .0000E+00
6  .0000E+00    7  .1000E+01    8  .1000E+01
    9  .1000E+01   10  .1000E+01   11  .1000E+01   12  .1000E+01   13  .1000E+01
14  .1000E+01   15  .1000E+01   16  .1000E+01
   17  .0000E+00   18  .0000E+00   19  .0000E+00   20  .0000E+00   21  .0000E+00
22  .0000E+00   23  .0000E+00   24  .0000E+00
                                                DAY OF WEEK = SATURDAY
    1  .0000E+00    2  .0000E+00    3  .0000E+00    4  .0000E+00    5  .0000E+00
6  .0000E+00    7  .0000E+00    8  .0000E+00
    9  .0000E+00   10  .0000E+00   11  .0000E+00   12  .0000E+00   13  .0000E+00
14  .0000E+00   15  .0000E+00   16  .0000E+00
   17  .0000E+00   18  .0000E+00   19  .0000E+00   20  .0000E+00   21  .0000E+00
22  .0000E+00   23  .0000E+00   24  .0000E+00
                                                DAY OF WEEK = SUNDAY
    1  .0000E+00    2  .0000E+00    3  .0000E+00    4  .0000E+00    5  .0000E+00
6  .0000E+00    7  .0000E+00    8  .0000E+00
    9  .0000E+00   10  .0000E+00   11  .0000E+00   12  .0000E+00   13  .0000E+00
14  .0000E+00   15  .0000E+00   16  .0000E+00
   17  .0000E+00   18  .0000E+00   19  .0000E+00   20  .0000E+00   21  .0000E+00
22  .0000E+00   23  .0000E+00   24  .0000E+00
```

```
 *** AERMOD - VERSION 22112  ***   *** C:\Lakes\Project Files\Garvey\Garvey.isc
***        03/04/24
 *** AERMET - VERSION  16216 ***   ***
***        13:00:54

PAGE  72
 *** MODELOPTs:    RegDFAULT  CONC  ELEV  URBAN  ADJ_U*

                   * SOURCE EMISSION RATE SCALARS WHICH VARY DIURNALLY AND BY DAY
OF WEEK (HRDOW) *

 SOURCE ID = L0001848     ; SOURCE TYPE = VOLUME   :
  HOUR   SCALAR   HOUR   SCALAR   HOUR   SCALAR   HOUR   SCALAR   HOUR   SCALAR
HOUR   SCALAR   HOUR   SCALAR   HOUR   SCALAR
 - - - - - - - - - - - - - - - - - - - - - - - - - - - - - - - - - - - - - - - -
- - - - - - - - - - - - - - - - - - - - - - - - - -
                                                DAY OF WEEK = WEEKDAY
    1  .0000E+00    2  .0000E+00    3  .0000E+00    4  .0000E+00    5  .0000E+00
6  .0000E+00    7  .1000E+01    8  .1000E+01
    9  .1000E+01   10  .1000E+01   11  .1000E+01   12  .1000E+01   13  .1000E+01
14  .1000E+01   15  .1000E+01   16  .1000E+01
   17  .0000E+00   18  .0000E+00   19  .0000E+00   20  .0000E+00   21  .0000E+00
22  .0000E+00   23  .0000E+00   24  .0000E+00
                                                DAY OF WEEK = SATURDAY
    1  .0000E+00    2  .0000E+00    3  .0000E+00    4  .0000E+00    5  .0000E+00
6  .0000E+00    7  .0000E+00    8  .0000E+00
    9  .0000E+00   10  .0000E+00   11  .0000E+00   12  .0000E+00   13  .0000E+00
14  .0000E+00   15  .0000E+00   16  .0000E+00
   17  .0000E+00   18  .0000E+00   19  .0000E+00   20  .0000E+00   21  .0000E+00
22  .0000E+00   23  .0000E+00   24  .0000E+00
                                                DAY OF WEEK = SUNDAY
    1  .0000E+00    2  .0000E+00    3  .0000E+00    4  .0000E+00    5  .0000E+00
6  .0000E+00    7  .0000E+00    8  .0000E+00
    9  .0000E+00   10  .0000E+00   11  .0000E+00   12  .0000E+00   13  .0000E+00
14  .0000E+00   15  .0000E+00   16  .0000E+00
   17  .0000E+00   18  .0000E+00   19  .0000E+00   20  .0000E+00   21  .0000E+00
22  .0000E+00   23  .0000E+00   24  .0000E+00
```

```
 *** AERMOD - VERSION 22112  ***   *** C:\Lakes\Project Files\Garvey\Garvey.isc
***        03/04/24
 *** AERMET - VERSION  16216 ***   ***
***        13:00:54

PAGE  73
 *** MODELOPTs:    RegDFAULT  CONC  ELEV  URBAN  ADJ_U*

                   * SOURCE EMISSION RATE SCALARS WHICH VARY DIURNALLY AND BY DAY
OF WEEK (HRDOW) *

 SOURCE ID = L0001849     ; SOURCE TYPE = VOLUME   :
  HOUR   SCALAR   HOUR   SCALAR   HOUR   SCALAR   HOUR   SCALAR   HOUR   SCALAR
HOUR   SCALAR   HOUR   SCALAR   HOUR   SCALAR
 - - - - - - - - - - - - - - - - - - - - - - - - - - - - - - - - - - - - - - - -
- - - - - - - - - - - - - - - - - - - - - - - - -
                                                DAY OF WEEK = WEEKDAY
    1  .0000E+00    2  .0000E+00    3  .0000E+00    4  .0000E+00    5  .0000E+00
6  .0000E+00    7  .1000E+01    8  .1000E+01
    9  .1000E+01   10  .1000E+01   11  .1000E+01   12  .1000E+01   13  .1000E+01
14  .1000E+01   15  .1000E+01   16  .1000E+01
   17  .0000E+00   18  .0000E+00   19  .0000E+00   20  .0000E+00   21  .0000E+00
22  .0000E+00   23  .0000E+00   24  .0000E+00
                                                DAY OF WEEK = SATURDAY
    1  .0000E+00    2  .0000E+00    3  .0000E+00    4  .0000E+00    5  .0000E+00
6  .0000E+00    7  .0000E+00    8  .0000E+00
    9  .0000E+00   10  .0000E+00   11  .0000E+00   12  .0000E+00   13  .0000E+00
14  .0000E+00   15  .0000E+00   16  .0000E+00
   17  .0000E+00   18  .0000E+00   19  .0000E+00   20  .0000E+00   21  .0000E+00
22  .0000E+00   23  .0000E+00   24  .0000E+00
                                                DAY OF WEEK = SUNDAY
    1  .0000E+00    2  .0000E+00    3  .0000E+00    4  .0000E+00    5  .0000E+00
6  .0000E+00    7  .0000E+00    8  .0000E+00
    9  .0000E+00   10  .0000E+00   11  .0000E+00   12  .0000E+00   13  .0000E+00
14  .0000E+00   15  .0000E+00   16  .0000E+00
   17  .0000E+00   18  .0000E+00   19  .0000E+00   20  .0000E+00   21  .0000E+00
22  .0000E+00   23  .0000E+00   24  .0000E+00
```

```
 *** AERMOD - VERSION 22112  ***   *** C:\Lakes\Project Files\Garvey\Garvey.isc
***        03/04/24
 *** AERMET - VERSION  16216 ***   ***
***        13:00:54

PAGE  74
 *** MODELOPTs:    RegDFAULT  CONC  ELEV  URBAN  ADJ_U*

                   * SOURCE EMISSION RATE SCALARS WHICH VARY DIURNALLY AND BY DAY
OF WEEK (HRDOW) *

 SOURCE ID = L0001850     ; SOURCE TYPE = VOLUME   :
  HOUR   SCALAR   HOUR   SCALAR   HOUR   SCALAR   HOUR   SCALAR   HOUR   SCALAR
HOUR   SCALAR   HOUR   SCALAR   HOUR   SCALAR
 - - - - - - - - - - - - - - - - - - - - - - - - - - - - - - - - - - - - - - - -
- - - - - - - - - - - - - - - - - - - - - - - - - -
                                                DAY OF WEEK = WEEKDAY
    1  .0000E+00    2  .0000E+00    3  .0000E+00    4  .0000E+00    5  .0000E+00
6  .0000E+00    7  .1000E+01    8  .1000E+01
    9  .1000E+01   10  .1000E+01   11  .1000E+01   12  .1000E+01   13  .1000E+01
14  .1000E+01   15  .1000E+01   16  .1000E+01
   17  .0000E+00   18  .0000E+00   19  .0000E+00   20  .0000E+00   21  .0000E+00
22  .0000E+00   23  .0000E+00   24  .0000E+00
                                                DAY OF WEEK = SATURDAY
    1  .0000E+00    2  .0000E+00    3  .0000E+00    4  .0000E+00    5  .0000E+00
6  .0000E+00    7  .0000E+00    8  .0000E+00
    9  .0000E+00   10  .0000E+00   11  .0000E+00   12  .0000E+00   13  .0000E+00
14  .0000E+00   15  .0000E+00   16  .0000E+00
   17  .0000E+00   18  .0000E+00   19  .0000E+00   20  .0000E+00   21  .0000E+00
22  .0000E+00   23  .0000E+00   24  .0000E+00
                                                DAY OF WEEK = SUNDAY
    1  .0000E+00    2  .0000E+00    3  .0000E+00    4  .0000E+00    5  .0000E+00
6  .0000E+00    7  .0000E+00    8  .0000E+00
    9  .0000E+00   10  .0000E+00   11  .0000E+00   12  .0000E+00   13  .0000E+00
14  .0000E+00   15  .0000E+00   16  .0000E+00
   17  .0000E+00   18  .0000E+00   19  .0000E+00   20  .0000E+00   21  .0000E+00
22  .0000E+00   23  .0000E+00   24  .0000E+00
```

```
 *** AERMOD - VERSION 22112  ***   *** C:\Lakes\Project Files\Garvey\Garvey.isc
***        03/04/24
 *** AERMET - VERSION  16216 ***   ***
***        13:00:54

PAGE  75
 *** MODELOPTs:    RegDFAULT  CONC  ELEV  URBAN  ADJ_U*

                   * SOURCE EMISSION RATE SCALARS WHICH VARY DIURNALLY AND BY DAY
OF WEEK (HRDOW) *

 SOURCE ID = L0001851     ; SOURCE TYPE = VOLUME   :
  HOUR   SCALAR   HOUR   SCALAR   HOUR   SCALAR   HOUR   SCALAR   HOUR   SCALAR
HOUR   SCALAR   HOUR   SCALAR   HOUR   SCALAR
 - - - - - - - - - - - - - - - - - - - - - - - - - - - - - - - - - - - - - - - -
- - - - - - - - - - - - - - - - - - - - - - - - -
                                                DAY OF WEEK = WEEKDAY
    1  .0000E+00    2  .0000E+00    3  .0000E+00    4  .0000E+00    5  .0000E+00
6  .0000E+00    7  .1000E+01    8  .1000E+01
    9  .1000E+01   10  .1000E+01   11  .1000E+01   12  .1000E+01   13  .1000E+01
14  .1000E+01   15  .1000E+01   16  .1000E+01
   17  .0000E+00   18  .0000E+00   19  .0000E+00   20  .0000E+00   21  .0000E+00
22  .0000E+00   23  .0000E+00   24  .0000E+00
                                                DAY OF WEEK = SATURDAY
    1  .0000E+00    2  .0000E+00    3  .0000E+00    4  .0000E+00    5  .0000E+00
6  .0000E+00    7  .0000E+00    8  .0000E+00
    9  .0000E+00   10  .0000E+00   11  .0000E+00   12  .0000E+00   13  .0000E+00
14  .0000E+00   15  .0000E+00   16  .0000E+00
   17  .0000E+00   18  .0000E+00   19  .0000E+00   20  .0000E+00   21  .0000E+00
22  .0000E+00   23  .0000E+00   24  .0000E+00
                                                DAY OF WEEK = SUNDAY
    1  .0000E+00    2  .0000E+00    3  .0000E+00    4  .0000E+00    5  .0000E+00
6  .0000E+00    7  .0000E+00    8  .0000E+00
    9  .0000E+00   10  .0000E+00   11  .0000E+00   12  .0000E+00   13  .0000E+00
14  .0000E+00   15  .0000E+00   16  .0000E+00
   17  .0000E+00   18  .0000E+00   19  .0000E+00   20  .0000E+00   21  .0000E+00
22  .0000E+00   23  .0000E+00   24  .0000E+00
```

```
 *** AERMOD - VERSION 22112  ***   *** C:\Lakes\Project Files\Garvey\Garvey.isc
***        03/04/24
 *** AERMET - VERSION  16216 ***   ***
***        13:00:54

PAGE  76
 *** MODELOPTs:    RegDFAULT  CONC  ELEV  URBAN  ADJ_U*

                   * SOURCE EMISSION RATE SCALARS WHICH VARY DIURNALLY AND BY DAY
OF WEEK (HRDOW) *

 SOURCE ID = L0001852     ; SOURCE TYPE = VOLUME   :
  HOUR   SCALAR   HOUR   SCALAR   HOUR   SCALAR   HOUR   SCALAR   HOUR   SCALAR
HOUR   SCALAR   HOUR   SCALAR   HOUR   SCALAR
 - - - - - - - - - - - - - - - - - - - - - - - - - - - - - - - - - - - - - - - -
- - - - - - - - - - - - - - - - - - - - - - - - -
                                                DAY OF WEEK = WEEKDAY
    1  .0000E+00    2  .0000E+00    3  .0000E+00    4  .0000E+00    5  .0000E+00
6  .0000E+00    7  .1000E+01    8  .1000E+01
    9  .1000E+01   10  .1000E+01   11  .1000E+01   12  .1000E+01   13  .1000E+01
14  .1000E+01   15  .1000E+01   16  .1000E+01
   17  .0000E+00   18  .0000E+00   19  .0000E+00   20  .0000E+00   21  .0000E+00
22  .0000E+00   23  .0000E+00   24  .0000E+00
                                                DAY OF WEEK = SATURDAY
    1  .0000E+00    2  .0000E+00    3  .0000E+00    4  .0000E+00    5  .0000E+00
6  .0000E+00    7  .0000E+00    8  .0000E+00
    9  .0000E+00   10  .0000E+00   11  .0000E+00   12  .0000E+00   13  .0000E+00
14  .0000E+00   15  .0000E+00   16  .0000E+00
   17  .0000E+00   18  .0000E+00   19  .0000E+00   20  .0000E+00   21  .0000E+00
22  .0000E+00   23  .0000E+00   24  .0000E+00
                                                DAY OF WEEK = SUNDAY
    1  .0000E+00    2  .0000E+00    3  .0000E+00    4  .0000E+00    5  .0000E+00
6  .0000E+00    7  .0000E+00    8  .0000E+00
    9  .0000E+00   10  .0000E+00   11  .0000E+00   12  .0000E+00   13  .0000E+00
14  .0000E+00   15  .0000E+00   16  .0000E+00
   17  .0000E+00   18  .0000E+00   19  .0000E+00   20  .0000E+00   21  .0000E+00
22  .0000E+00   23  .0000E+00   24  .0000E+00
```

*** MODELOPTs: RegDFAULT CONC ELEV URBAN ADJ_U*

* SOURCE EMISSION RATE SCALARS WHICH VARY DIURNALLY AND BY DAY OF WEEK (HRDOW) *

SOURCE ID = L0001853 ; SOURCE TYPE = VOLUME :

```
  HOUR   SCALAR   HOUR   SCALAR   HOUR   SCALAR   HOUR   SCALAR   HOUR   SCALAR
HOUR   SCALAR   HOUR   SCALAR   HOUR   SCALAR
 - - - - - - - - - - - - - - - - - - - - - - - - - - - - - - - - - - - - - - - - -
- - - - - - - - - - - - - - - - - - - - - - - - - -
                                                DAY OF WEEK = WEEKDAY
    1  .0000E+00    2  .0000E+00    3  .0000E+00    4  .0000E+00    5  .0000E+00
6  .0000E+00    7  .1000E+01    8  .1000E+01
    9  .1000E+01   10  .1000E+01   11  .1000E+01   12  .1000E+01   13  .1000E+01
14  .1000E+01   15  .1000E+01   16  .1000E+01
   17  .0000E+00   18  .0000E+00   19  .0000E+00   20  .0000E+00   21  .0000E+00
22  .0000E+00   23  .0000E+00   24  .0000E+00
                                                DAY OF WEEK = SATURDAY
    1  .0000E+00    2  .0000E+00    3  .0000E+00    4  .0000E+00    5  .0000E+00
6  .0000E+00    7  .0000E+00    8  .0000E+00
    9  .0000E+00   10  .0000E+00   11  .0000E+00   12  .0000E+00   13  .0000E+00
14  .0000E+00   15  .0000E+00   16  .0000E+00
   17  .0000E+00   18  .0000E+00   19  .0000E+00   20  .0000E+00   21  .0000E+00
22  .0000E+00   23  .0000E+00   24  .0000E+00
                                                DAY OF WEEK = SUNDAY
    1  .0000E+00    2  .0000E+00    3  .0000E+00    4  .0000E+00    5  .0000E+00
6  .0000E+00    7  .0000E+00    8  .0000E+00
    9  .0000E+00   10  .0000E+00   11  .0000E+00   12  .0000E+00   13  .0000E+00
14  .0000E+00   15  .0000E+00   16  .0000E+00
   17  .0000E+00   18  .0000E+00   19  .0000E+00   20  .0000E+00   21  .0000E+00
22  .0000E+00   23  .0000E+00   24  .0000E+00
```

```
 *** AERMOD - VERSION 22112  ***   *** C:\Lakes\Project Files\Garvey\Garvey.isc
***        03/04/24
 *** AERMET - VERSION  16216 ***   ***
***        13:00:54

PAGE  78
 *** MODELOPTs:    RegDFAULT  CONC  ELEV  URBAN  ADJ_U*

                   * SOURCE EMISSION RATE SCALARS WHICH VARY DIURNALLY AND BY DAY
OF WEEK (HRDOW) *

 SOURCE ID = L0001854     ; SOURCE TYPE = VOLUME   :
  HOUR   SCALAR   HOUR   SCALAR   HOUR   SCALAR   HOUR   SCALAR   HOUR   SCALAR
HOUR   SCALAR   HOUR   SCALAR   HOUR   SCALAR
 - - - - - - - - - - - - - - - - - - - - - - - - - - - - - - - - - - - - - - - -
- - - - - - - - - - - - - - - - - - - - - - - - -
                                                DAY OF WEEK = WEEKDAY
    1  .0000E+00    2  .0000E+00    3  .0000E+00    4  .0000E+00    5  .0000E+00
6  .0000E+00    7  .1000E+01    8  .1000E+01
    9  .1000E+01   10  .1000E+01   11  .1000E+01   12  .1000E+01   13  .1000E+01
14  .1000E+01   15  .1000E+01   16  .1000E+01
   17  .0000E+00   18  .0000E+00   19  .0000E+00   20  .0000E+00   21  .0000E+00
22  .0000E+00   23  .0000E+00   24  .0000E+00
                                                DAY OF WEEK = SATURDAY
    1  .0000E+00    2  .0000E+00    3  .0000E+00    4  .0000E+00    5  .0000E+00
6  .0000E+00    7  .0000E+00    8  .0000E+00
    9  .0000E+00   10  .0000E+00   11  .0000E+00   12  .0000E+00   13  .0000E+00
14  .0000E+00   15  .0000E+00   16  .0000E+00
   17  .0000E+00   18  .0000E+00   19  .0000E+00   20  .0000E+00   21  .0000E+00
22  .0000E+00   23  .0000E+00   24  .0000E+00
                                                DAY OF WEEK = SUNDAY
    1  .0000E+00    2  .0000E+00    3  .0000E+00    4  .0000E+00    5  .0000E+00
6  .0000E+00    7  .0000E+00    8  .0000E+00
    9  .0000E+00   10  .0000E+00   11  .0000E+00   12  .0000E+00   13  .0000E+00
14  .0000E+00   15  .0000E+00   16  .0000E+00
   17  .0000E+00   18  .0000E+00   19  .0000E+00   20  .0000E+00   21  .0000E+00
22  .0000E+00   23  .0000E+00   24  .0000E+00
```

```
 *** AERMOD - VERSION 22112  ***   *** C:\Lakes\Project Files\Garvey\Garvey.isc
***        03/04/24
 *** AERMET - VERSION  16216 ***   ***
***        13:00:54

PAGE  79
 *** MODELOPTs:    RegDFAULT  CONC  ELEV  URBAN  ADJ_U*

                   * SOURCE EMISSION RATE SCALARS WHICH VARY DIURNALLY AND BY DAY
OF WEEK (HRDOW) *

 SOURCE ID = L0001855     ; SOURCE TYPE = VOLUME   :
  HOUR   SCALAR   HOUR   SCALAR   HOUR   SCALAR   HOUR   SCALAR   HOUR   SCALAR
HOUR   SCALAR   HOUR   SCALAR   HOUR   SCALAR
 - - - - - - - - - - - - - - - - - - - - - - - - - - - - - - - - - - - - - - - -
- - - - - - - - - - - - - - - - - - - - - - - - -
                                                DAY OF WEEK = WEEKDAY
    1  .0000E+00    2  .0000E+00    3  .0000E+00    4  .0000E+00    5  .0000E+00
6  .0000E+00    7  .1000E+01    8  .1000E+01
    9  .1000E+01   10  .1000E+01   11  .1000E+01   12  .1000E+01   13  .1000E+01
14  .1000E+01   15  .1000E+01   16  .1000E+01
   17  .0000E+00   18  .0000E+00   19  .0000E+00   20  .0000E+00   21  .0000E+00
22  .0000E+00   23  .0000E+00   24  .0000E+00
                                                DAY OF WEEK = SATURDAY
    1  .0000E+00    2  .0000E+00    3  .0000E+00    4  .0000E+00    5  .0000E+00
6  .0000E+00    7  .0000E+00    8  .0000E+00
    9  .0000E+00   10  .0000E+00   11  .0000E+00   12  .0000E+00   13  .0000E+00
14  .0000E+00   15  .0000E+00   16  .0000E+00
   17  .0000E+00   18  .0000E+00   19  .0000E+00   20  .0000E+00   21  .0000E+00
22  .0000E+00   23  .0000E+00   24  .0000E+00
                                                DAY OF WEEK = SUNDAY
    1  .0000E+00    2  .0000E+00    3  .0000E+00    4  .0000E+00    5  .0000E+00
6  .0000E+00    7  .0000E+00    8  .0000E+00
    9  .0000E+00   10  .0000E+00   11  .0000E+00   12  .0000E+00   13  .0000E+00
14  .0000E+00   15  .0000E+00   16  .0000E+00
   17  .0000E+00   18  .0000E+00   19  .0000E+00   20  .0000E+00   21  .0000E+00
22  .0000E+00   23  .0000E+00   24  .0000E+00
```

```
 *** AERMOD - VERSION 22112  ***   *** C:\Lakes\Project Files\Garvey\Garvey.isc
***        03/04/24
 *** AERMET - VERSION  16216 ***   ***
***        13:00:54

PAGE  80
 *** MODELOPTs:    RegDFAULT  CONC  ELEV  URBAN  ADJ_U*

                   * SOURCE EMISSION RATE SCALARS WHICH VARY DIURNALLY AND BY DAY
OF WEEK (HRDOW) *

 SOURCE ID = L0001856     ; SOURCE TYPE = VOLUME   :
  HOUR   SCALAR   HOUR   SCALAR   HOUR   SCALAR   HOUR   SCALAR   HOUR   SCALAR
HOUR   SCALAR   HOUR   SCALAR   HOUR   SCALAR
 - - - - - - - - - - - - - - - - - - - - - - - - - - - - - - - - - - - - - - - -
- - - - - - - - - - - - - - - - - - - - - - - - -
                                                DAY OF WEEK = WEEKDAY
    1  .0000E+00    2  .0000E+00    3  .0000E+00    4  .0000E+00    5  .0000E+00
6  .0000E+00    7  .1000E+01    8  .1000E+01
    9  .1000E+01   10  .1000E+01   11  .1000E+01   12  .1000E+01   13  .1000E+01
14  .1000E+01   15  .1000E+01   16  .1000E+01
   17  .0000E+00   18  .0000E+00   19  .0000E+00   20  .0000E+00   21  .0000E+00
22  .0000E+00   23  .0000E+00   24  .0000E+00
                                                DAY OF WEEK = SATURDAY
    1  .0000E+00    2  .0000E+00    3  .0000E+00    4  .0000E+00    5  .0000E+00
6  .0000E+00    7  .0000E+00    8  .0000E+00
    9  .0000E+00   10  .0000E+00   11  .0000E+00   12  .0000E+00   13  .0000E+00
14  .0000E+00   15  .0000E+00   16  .0000E+00
   17  .0000E+00   18  .0000E+00   19  .0000E+00   20  .0000E+00   21  .0000E+00
22  .0000E+00   23  .0000E+00   24  .0000E+00
                                                DAY OF WEEK = SUNDAY
    1  .0000E+00    2  .0000E+00    3  .0000E+00    4  .0000E+00    5  .0000E+00
6  .0000E+00    7  .0000E+00    8  .0000E+00
    9  .0000E+00   10  .0000E+00   11  .0000E+00   12  .0000E+00   13  .0000E+00
14  .0000E+00   15  .0000E+00   16  .0000E+00
   17  .0000E+00   18  .0000E+00   19  .0000E+00   20  .0000E+00   21  .0000E+00
22  .0000E+00   23  .0000E+00   24  .0000E+00
```

```
 *** AERMOD - VERSION 22112  ***   *** C:\Lakes\Project Files\Garvey\Garvey.isc
***        03/04/24
 *** AERMET - VERSION  16216 ***   ***
***        13:00:54

PAGE  81
 *** MODELOPTs:    RegDFAULT  CONC  ELEV  URBAN  ADJ_U*

                   * SOURCE EMISSION RATE SCALARS WHICH VARY DIURNALLY AND BY DAY
OF WEEK (HRDOW) *

 SOURCE ID = L0001857     ; SOURCE TYPE = VOLUME   :
  HOUR   SCALAR   HOUR   SCALAR   HOUR   SCALAR   HOUR   SCALAR   HOUR   SCALAR
HOUR   SCALAR   HOUR   SCALAR   HOUR   SCALAR
 - - - - - - - - - - - - - - - - - - - - - - - - - - - - - - - - - - - - - - - -
- - - - - - - - - - - - - - - - - - - - - - - - -
                                                DAY OF WEEK = WEEKDAY
    1  .0000E+00    2  .0000E+00    3  .0000E+00    4  .0000E+00    5  .0000E+00
6  .0000E+00    7  .1000E+01    8  .1000E+01
    9  .1000E+01   10  .1000E+01   11  .1000E+01   12  .1000E+01   13  .1000E+01
14  .1000E+01   15  .1000E+01   16  .1000E+01
   17  .0000E+00   18  .0000E+00   19  .0000E+00   20  .0000E+00   21  .0000E+00
22  .0000E+00   23  .0000E+00   24  .0000E+00
                                                DAY OF WEEK = SATURDAY
    1  .0000E+00    2  .0000E+00    3  .0000E+00    4  .0000E+00    5  .0000E+00
6  .0000E+00    7  .0000E+00    8  .0000E+00
    9  .0000E+00   10  .0000E+00   11  .0000E+00   12  .0000E+00   13  .0000E+00
14  .0000E+00   15  .0000E+00   16  .0000E+00
   17  .0000E+00   18  .0000E+00   19  .0000E+00   20  .0000E+00   21  .0000E+00
22  .0000E+00   23  .0000E+00   24  .0000E+00
                                                DAY OF WEEK = SUNDAY
    1  .0000E+00    2  .0000E+00    3  .0000E+00    4  .0000E+00    5  .0000E+00
6  .0000E+00    7  .0000E+00    8  .0000E+00
    9  .0000E+00   10  .0000E+00   11  .0000E+00   12  .0000E+00   13  .0000E+00
14  .0000E+00   15  .0000E+00   16  .0000E+00
   17  .0000E+00   18  .0000E+00   19  .0000E+00   20  .0000E+00   21  .0000E+00
22  .0000E+00   23  .0000E+00   24  .0000E+00
```

```
 *** AERMOD - VERSION 22112  ***   *** C:\Lakes\Project Files\Garvey\Garvey.isc
***        03/04/24
 *** AERMET - VERSION  16216 ***   ***
***        13:00:54

PAGE  82
 *** MODELOPTs:    RegDFAULT  CONC  ELEV  URBAN  ADJ_U*

                   * SOURCE EMISSION RATE SCALARS WHICH VARY DIURNALLY AND BY DAY
OF WEEK (HRDOW) *

 SOURCE ID = L0001858     ; SOURCE TYPE = VOLUME   :
  HOUR   SCALAR   HOUR   SCALAR   HOUR   SCALAR   HOUR   SCALAR   HOUR   SCALAR
HOUR   SCALAR   HOUR   SCALAR   HOUR   SCALAR
 - - - - - - - - - - - - - - - - - - - - - - - - - - - - - - - - - - - - - - - -
- - - - - - - - - - - - - - - - - - - - - - - - - -
                                                DAY OF WEEK = WEEKDAY
    1  .0000E+00    2  .0000E+00    3  .0000E+00    4  .0000E+00    5  .0000E+00
6  .0000E+00    7  .1000E+01    8  .1000E+01
    9  .1000E+01   10  .1000E+01   11  .1000E+01   12  .1000E+01   13  .1000E+01
14  .1000E+01   15  .1000E+01   16  .1000E+01
   17  .0000E+00   18  .0000E+00   19  .0000E+00   20  .0000E+00   21  .0000E+00
22  .0000E+00   23  .0000E+00   24  .0000E+00
                                                DAY OF WEEK = SATURDAY
    1  .0000E+00    2  .0000E+00    3  .0000E+00    4  .0000E+00    5  .0000E+00
6  .0000E+00    7  .0000E+00    8  .0000E+00
    9  .0000E+00   10  .0000E+00   11  .0000E+00   12  .0000E+00   13  .0000E+00
14  .0000E+00   15  .0000E+00   16  .0000E+00
   17  .0000E+00   18  .0000E+00   19  .0000E+00   20  .0000E+00   21  .0000E+00
22  .0000E+00   23  .0000E+00   24  .0000E+00
                                                DAY OF WEEK = SUNDAY
    1  .0000E+00    2  .0000E+00    3  .0000E+00    4  .0000E+00    5  .0000E+00
6  .0000E+00    7  .0000E+00    8  .0000E+00
    9  .0000E+00   10  .0000E+00   11  .0000E+00   12  .0000E+00   13  .0000E+00
14  .0000E+00   15  .0000E+00   16  .0000E+00
   17  .0000E+00   18  .0000E+00   19  .0000E+00   20  .0000E+00   21  .0000E+00
22  .0000E+00   23  .0000E+00   24  .0000E+00
```

```
 *** AERMOD - VERSION 22112  ***   *** C:\Lakes\Project Files\Garvey\Garvey.isc
***        03/04/24
 *** AERMET - VERSION  16216 ***   ***
***        13:00:54

PAGE  83
 *** MODELOPTs:    RegDFAULT  CONC  ELEV  URBAN  ADJ_U*

                   * SOURCE EMISSION RATE SCALARS WHICH VARY DIURNALLY AND BY DAY
OF WEEK (HRDOW) *

 SOURCE ID = L0001859     ; SOURCE TYPE = VOLUME   :
  HOUR   SCALAR   HOUR   SCALAR   HOUR   SCALAR   HOUR   SCALAR   HOUR   SCALAR
HOUR   SCALAR   HOUR   SCALAR   HOUR   SCALAR
 - - - - - - - - - - - - - - - - - - - - - - - - - - - - - - - - - - - - - - - -
- - - - - - - - - - - - - - - - - - - - - - - - -
                                                DAY OF WEEK = WEEKDAY
    1  .0000E+00    2  .0000E+00    3  .0000E+00    4  .0000E+00    5  .0000E+00
6  .0000E+00    7  .1000E+01    8  .1000E+01
    9  .1000E+01   10  .1000E+01   11  .1000E+01   12  .1000E+01   13  .1000E+01
14  .1000E+01   15  .1000E+01   16  .1000E+01
   17  .0000E+00   18  .0000E+00   19  .0000E+00   20  .0000E+00   21  .0000E+00
22  .0000E+00   23  .0000E+00   24  .0000E+00
                                                DAY OF WEEK = SATURDAY
    1  .0000E+00    2  .0000E+00    3  .0000E+00    4  .0000E+00    5  .0000E+00
6  .0000E+00    7  .0000E+00    8  .0000E+00
    9  .0000E+00   10  .0000E+00   11  .0000E+00   12  .0000E+00   13  .0000E+00
14  .0000E+00   15  .0000E+00   16  .0000E+00
   17  .0000E+00   18  .0000E+00   19  .0000E+00   20  .0000E+00   21  .0000E+00
22  .0000E+00   23  .0000E+00   24  .0000E+00
                                                DAY OF WEEK = SUNDAY
    1  .0000E+00    2  .0000E+00    3  .0000E+00    4  .0000E+00    5  .0000E+00
6  .0000E+00    7  .0000E+00    8  .0000E+00
    9  .0000E+00   10  .0000E+00   11  .0000E+00   12  .0000E+00   13  .0000E+00
14  .0000E+00   15  .0000E+00   16  .0000E+00
   17  .0000E+00   18  .0000E+00   19  .0000E+00   20  .0000E+00   21  .0000E+00
22  .0000E+00   23  .0000E+00   24  .0000E+00
```

```
 *** AERMOD - VERSION 22112  ***   *** C:\Lakes\Project Files\Garvey\Garvey.isc
***        03/04/24
 *** AERMET - VERSION  16216 ***   ***
***        13:00:54

PAGE  84
 *** MODELOPTs:    RegDFAULT  CONC  ELEV  URBAN  ADJ_U*

                   * SOURCE EMISSION RATE SCALARS WHICH VARY DIURNALLY AND BY DAY
OF WEEK (HRDOW) *

 SOURCE ID = L0001860     ; SOURCE TYPE = VOLUME   :
  HOUR   SCALAR   HOUR   SCALAR   HOUR   SCALAR   HOUR   SCALAR   HOUR   SCALAR
HOUR   SCALAR   HOUR   SCALAR   HOUR   SCALAR
 - - - - - - - - - - - - - - - - - - - - - - - - - - - - - - - - - - - - - - - -
- - - - - - - - - - - - - - - - - - - - - - - - - -
                                                DAY OF WEEK = WEEKDAY
    1  .0000E+00    2  .0000E+00    3  .0000E+00    4  .0000E+00    5  .0000E+00
6  .0000E+00    7  .1000E+01    8  .1000E+01
    9  .1000E+01   10  .1000E+01   11  .1000E+01   12  .1000E+01   13  .1000E+01
14  .1000E+01   15  .1000E+01   16  .1000E+01
   17  .0000E+00   18  .0000E+00   19  .0000E+00   20  .0000E+00   21  .0000E+00
22  .0000E+00   23  .0000E+00   24  .0000E+00
                                                DAY OF WEEK = SATURDAY
    1  .0000E+00    2  .0000E+00    3  .0000E+00    4  .0000E+00    5  .0000E+00
6  .0000E+00    7  .0000E+00    8  .0000E+00
    9  .0000E+00   10  .0000E+00   11  .0000E+00   12  .0000E+00   13  .0000E+00
14  .0000E+00   15  .0000E+00   16  .0000E+00
   17  .0000E+00   18  .0000E+00   19  .0000E+00   20  .0000E+00   21  .0000E+00
22  .0000E+00   23  .0000E+00   24  .0000E+00
                                                DAY OF WEEK = SUNDAY
    1  .0000E+00    2  .0000E+00    3  .0000E+00    4  .0000E+00    5  .0000E+00
6  .0000E+00    7  .0000E+00    8  .0000E+00
    9  .0000E+00   10  .0000E+00   11  .0000E+00   12  .0000E+00   13  .0000E+00
14  .0000E+00   15  .0000E+00   16  .0000E+00
   17  .0000E+00   18  .0000E+00   19  .0000E+00   20  .0000E+00   21  .0000E+00
22  .0000E+00   23  .0000E+00   24  .0000E+00
```

```
 *** AERMOD - VERSION 22112  ***   *** C:\Lakes\Project Files\Garvey\Garvey.isc
***        03/04/24
 *** AERMET - VERSION  16216 ***   ***
***        13:00:54

PAGE  85
 *** MODELOPTs:    RegDFAULT  CONC  ELEV  URBAN  ADJ_U*

                   * SOURCE EMISSION RATE SCALARS WHICH VARY DIURNALLY AND BY DAY
OF WEEK (HRDOW) *

 SOURCE ID = L0001861     ; SOURCE TYPE = VOLUME   :
  HOUR   SCALAR   HOUR   SCALAR   HOUR   SCALAR   HOUR   SCALAR   HOUR   SCALAR
HOUR   SCALAR   HOUR   SCALAR   HOUR   SCALAR
 - - - - - - - - - - - - - - - - - - - - - - - - - - - - - - - - - - - - - - - -
- - - - - - - - - - - - - - - - - - - - - - - - - -
                                                DAY OF WEEK = WEEKDAY
    1  .0000E+00    2  .0000E+00    3  .0000E+00    4  .0000E+00    5  .0000E+00
6  .0000E+00    7  .1000E+01    8  .1000E+01
    9  .1000E+01   10  .1000E+01   11  .1000E+01   12  .1000E+01   13  .1000E+01
14  .1000E+01   15  .1000E+01   16  .1000E+01
   17  .0000E+00   18  .0000E+00   19  .0000E+00   20  .0000E+00   21  .0000E+00
22  .0000E+00   23  .0000E+00   24  .0000E+00
                                                DAY OF WEEK = SATURDAY
    1  .0000E+00    2  .0000E+00    3  .0000E+00    4  .0000E+00    5  .0000E+00
6  .0000E+00    7  .0000E+00    8  .0000E+00
    9  .0000E+00   10  .0000E+00   11  .0000E+00   12  .0000E+00   13  .0000E+00
14  .0000E+00   15  .0000E+00   16  .0000E+00
   17  .0000E+00   18  .0000E+00   19  .0000E+00   20  .0000E+00   21  .0000E+00
22  .0000E+00   23  .0000E+00   24  .0000E+00
                                                DAY OF WEEK = SUNDAY
    1  .0000E+00    2  .0000E+00    3  .0000E+00    4  .0000E+00    5  .0000E+00
6  .0000E+00    7  .0000E+00    8  .0000E+00
    9  .0000E+00   10  .0000E+00   11  .0000E+00   12  .0000E+00   13  .0000E+00
14  .0000E+00   15  .0000E+00   16  .0000E+00
   17  .0000E+00   18  .0000E+00   19  .0000E+00   20  .0000E+00   21  .0000E+00
22  .0000E+00   23  .0000E+00   24  .0000E+00
```

```
 *** AERMOD - VERSION 22112  ***   *** C:\Lakes\Project Files\Garvey\Garvey.isc
***        03/04/24
 *** AERMET - VERSION  16216 ***   ***
***        13:00:54

PAGE  86
 *** MODELOPTs:    RegDFAULT  CONC  ELEV  URBAN  ADJ_U*

                   * SOURCE EMISSION RATE SCALARS WHICH VARY DIURNALLY AND BY DAY
OF WEEK (HRDOW) *

 SOURCE ID = L0001862     ; SOURCE TYPE = VOLUME   :
  HOUR   SCALAR   HOUR   SCALAR   HOUR   SCALAR   HOUR   SCALAR   HOUR   SCALAR
HOUR   SCALAR   HOUR   SCALAR   HOUR   SCALAR
 - - - - - - - - - - - - - - - - - - - - - - - - - - - - - - - - - - - - - - - -
- - - - - - - - - - - - - - - - - - - - - - - - - -
                                                DAY OF WEEK = WEEKDAY
    1  .0000E+00    2  .0000E+00    3  .0000E+00    4  .0000E+00    5  .0000E+00
6  .0000E+00    7  .1000E+01    8  .1000E+01
    9  .1000E+01   10  .1000E+01   11  .1000E+01   12  .1000E+01   13  .1000E+01
14  .1000E+01   15  .1000E+01   16  .1000E+01
   17  .0000E+00   18  .0000E+00   19  .0000E+00   20  .0000E+00   21  .0000E+00
22  .0000E+00   23  .0000E+00   24  .0000E+00
                                                DAY OF WEEK = SATURDAY
    1  .0000E+00    2  .0000E+00    3  .0000E+00    4  .0000E+00    5  .0000E+00
6  .0000E+00    7  .0000E+00    8  .0000E+00
    9  .0000E+00   10  .0000E+00   11  .0000E+00   12  .0000E+00   13  .0000E+00
14  .0000E+00   15  .0000E+00   16  .0000E+00
   17  .0000E+00   18  .0000E+00   19  .0000E+00   20  .0000E+00   21  .0000E+00
22  .0000E+00   23  .0000E+00   24  .0000E+00
                                                DAY OF WEEK = SUNDAY
    1  .0000E+00    2  .0000E+00    3  .0000E+00    4  .0000E+00    5  .0000E+00
6  .0000E+00    7  .0000E+00    8  .0000E+00
    9  .0000E+00   10  .0000E+00   11  .0000E+00   12  .0000E+00   13  .0000E+00
14  .0000E+00   15  .0000E+00   16  .0000E+00
   17  .0000E+00   18  .0000E+00   19  .0000E+00   20  .0000E+00   21  .0000E+00
22  .0000E+00   23  .0000E+00   24  .0000E+00
```

```
 *** AERMOD - VERSION 22112  ***   *** C:\Lakes\Project Files\Garvey\Garvey.isc
***        03/04/24
 *** AERMET - VERSION  16216 ***   ***
***        13:00:54

PAGE  87
 *** MODELOPTs:    RegDFAULT  CONC  ELEV  URBAN  ADJ_U*

                   * SOURCE EMISSION RATE SCALARS WHICH VARY DIURNALLY AND BY DAY
OF WEEK (HRDOW) *

 SOURCE ID = L0001863     ; SOURCE TYPE = VOLUME   :
  HOUR   SCALAR   HOUR   SCALAR   HOUR   SCALAR   HOUR   SCALAR   HOUR   SCALAR
HOUR   SCALAR   HOUR   SCALAR   HOUR   SCALAR
 - - - - - - - - - - - - - - - - - - - - - - - - - - - - - - - - - - - - - - - -
- - - - - - - - - - - - - - - - - - - - - - - - -
                                                DAY OF WEEK = WEEKDAY
    1  .0000E+00    2  .0000E+00    3  .0000E+00    4  .0000E+00    5  .0000E+00
6  .0000E+00    7  .1000E+01    8  .1000E+01
    9  .1000E+01   10  .1000E+01   11  .1000E+01   12  .1000E+01   13  .1000E+01
14  .1000E+01   15  .1000E+01   16  .1000E+01
   17  .0000E+00   18  .0000E+00   19  .0000E+00   20  .0000E+00   21  .0000E+00
22  .0000E+00   23  .0000E+00   24  .0000E+00
                                                DAY OF WEEK = SATURDAY
    1  .0000E+00    2  .0000E+00    3  .0000E+00    4  .0000E+00    5  .0000E+00
6  .0000E+00    7  .0000E+00    8  .0000E+00
    9  .0000E+00   10  .0000E+00   11  .0000E+00   12  .0000E+00   13  .0000E+00
14  .0000E+00   15  .0000E+00   16  .0000E+00
   17  .0000E+00   18  .0000E+00   19  .0000E+00   20  .0000E+00   21  .0000E+00
22  .0000E+00   23  .0000E+00   24  .0000E+00
                                                DAY OF WEEK = SUNDAY
    1  .0000E+00    2  .0000E+00    3  .0000E+00    4  .0000E+00    5  .0000E+00
6  .0000E+00    7  .0000E+00    8  .0000E+00
    9  .0000E+00   10  .0000E+00   11  .0000E+00   12  .0000E+00   13  .0000E+00
14  .0000E+00   15  .0000E+00   16  .0000E+00
   17  .0000E+00   18  .0000E+00   19  .0000E+00   20  .0000E+00   21  .0000E+00
22  .0000E+00   23  .0000E+00   24  .0000E+00
```

```
 *** AERMOD - VERSION 22112  ***   *** C:\Lakes\Project Files\Garvey\Garvey.isc
***        03/04/24
 *** AERMET - VERSION  16216 ***   ***
***        13:00:54

PAGE  88
 *** MODELOPTs:    RegDFAULT  CONC  ELEV  URBAN  ADJ_U*

                   * SOURCE EMISSION RATE SCALARS WHICH VARY DIURNALLY AND BY DAY
OF WEEK (HRDOW) *

 SOURCE ID = L0001864     ; SOURCE TYPE = VOLUME   :
  HOUR   SCALAR   HOUR   SCALAR   HOUR   SCALAR   HOUR   SCALAR   HOUR   SCALAR
HOUR   SCALAR   HOUR   SCALAR   HOUR   SCALAR
 - - - - - - - - - - - - - - - - - - - - - - - - - - - - - - - - - - - - - - - -
- - - - - - - - - - - - - - - - - - - - - - - - - -
                                                DAY OF WEEK = WEEKDAY
    1  .0000E+00    2  .0000E+00    3  .0000E+00    4  .0000E+00    5  .0000E+00
6  .0000E+00    7  .1000E+01    8  .1000E+01
    9  .1000E+01   10  .1000E+01   11  .1000E+01   12  .1000E+01   13  .1000E+01
14  .1000E+01   15  .1000E+01   16  .1000E+01
   17  .0000E+00   18  .0000E+00   19  .0000E+00   20  .0000E+00   21  .0000E+00
22  .0000E+00   23  .0000E+00   24  .0000E+00
                                                DAY OF WEEK = SATURDAY
    1  .0000E+00    2  .0000E+00    3  .0000E+00    4  .0000E+00    5  .0000E+00
6  .0000E+00    7  .0000E+00    8  .0000E+00
    9  .0000E+00   10  .0000E+00   11  .0000E+00   12  .0000E+00   13  .0000E+00
14  .0000E+00   15  .0000E+00   16  .0000E+00
   17  .0000E+00   18  .0000E+00   19  .0000E+00   20  .0000E+00   21  .0000E+00
22  .0000E+00   23  .0000E+00   24  .0000E+00
                                                DAY OF WEEK = SUNDAY
    1  .0000E+00    2  .0000E+00    3  .0000E+00    4  .0000E+00    5  .0000E+00
6  .0000E+00    7  .0000E+00    8  .0000E+00
    9  .0000E+00   10  .0000E+00   11  .0000E+00   12  .0000E+00   13  .0000E+00
14  .0000E+00   15  .0000E+00   16  .0000E+00
   17  .0000E+00   18  .0000E+00   19  .0000E+00   20  .0000E+00   21  .0000E+00
22  .0000E+00   23  .0000E+00   24  .0000E+00
```

```
 *** AERMOD - VERSION 22112  ***   *** C:\Lakes\Project Files\Garvey\Garvey.isc
***        03/04/24
 *** AERMET - VERSION  16216 ***   ***
***        13:00:54

PAGE  89
 *** MODELOPTs:    RegDFAULT  CONC  ELEV  URBAN  ADJ_U*

                   * SOURCE EMISSION RATE SCALARS WHICH VARY DIURNALLY AND BY DAY
OF WEEK (HRDOW) *

 SOURCE ID = L0001865     ; SOURCE TYPE = VOLUME   :
  HOUR   SCALAR   HOUR   SCALAR   HOUR   SCALAR   HOUR   SCALAR   HOUR   SCALAR
HOUR   SCALAR   HOUR   SCALAR   HOUR   SCALAR
 - - - - - - - - - - - - - - - - - - - - - - - - - - - - - - - - - - - - - - - -
- - - - - - - - - - - - - - - - - - - - - - - - -
                                                DAY OF WEEK = WEEKDAY
    1  .0000E+00    2  .0000E+00    3  .0000E+00    4  .0000E+00    5  .0000E+00
6  .0000E+00    7  .1000E+01    8  .1000E+01
    9  .1000E+01   10  .1000E+01   11  .1000E+01   12  .1000E+01   13  .1000E+01
14  .1000E+01   15  .1000E+01   16  .1000E+01
   17  .0000E+00   18  .0000E+00   19  .0000E+00   20  .0000E+00   21  .0000E+00
22  .0000E+00   23  .0000E+00   24  .0000E+00
                                                DAY OF WEEK = SATURDAY
    1  .0000E+00    2  .0000E+00    3  .0000E+00    4  .0000E+00    5  .0000E+00
6  .0000E+00    7  .0000E+00    8  .0000E+00
    9  .0000E+00   10  .0000E+00   11  .0000E+00   12  .0000E+00   13  .0000E+00
14  .0000E+00   15  .0000E+00   16  .0000E+00
   17  .0000E+00   18  .0000E+00   19  .0000E+00   20  .0000E+00   21  .0000E+00
22  .0000E+00   23  .0000E+00   24  .0000E+00
                                                DAY OF WEEK = SUNDAY
    1  .0000E+00    2  .0000E+00    3  .0000E+00    4  .0000E+00    5  .0000E+00
6  .0000E+00    7  .0000E+00    8  .0000E+00
    9  .0000E+00   10  .0000E+00   11  .0000E+00   12  .0000E+00   13  .0000E+00
14  .0000E+00   15  .0000E+00   16  .0000E+00
   17  .0000E+00   18  .0000E+00   19  .0000E+00   20  .0000E+00   21  .0000E+00
22  .0000E+00   23  .0000E+00   24  .0000E+00
```

```
 *** AERMOD - VERSION 22112  ***   *** C:\Lakes\Project Files\Garvey\Garvey.isc
***        03/04/24
 *** AERMET - VERSION  16216 ***   ***
***        13:00:54

PAGE  90
 *** MODELOPTs:    RegDFAULT  CONC  ELEV  URBAN  ADJ_U*

                   * SOURCE EMISSION RATE SCALARS WHICH VARY DIURNALLY AND BY DAY
OF WEEK (HRDOW) *

 SOURCE ID = L0001866     ; SOURCE TYPE = VOLUME   :
  HOUR   SCALAR   HOUR   SCALAR   HOUR   SCALAR   HOUR   SCALAR   HOUR   SCALAR
HOUR   SCALAR   HOUR   SCALAR   HOUR   SCALAR
 - - - - - - - - - - - - - - - - - - - - - - - - - - - - - - - - - - - - - - - -
- - - - - - - - - - - - - - - - - - - - - - - - - -
                                                DAY OF WEEK = WEEKDAY
    1  .0000E+00    2  .0000E+00    3  .0000E+00    4  .0000E+00    5  .0000E+00
6  .0000E+00    7  .1000E+01    8  .1000E+01
    9  .1000E+01   10  .1000E+01   11  .1000E+01   12  .1000E+01   13  .1000E+01
14  .1000E+01   15  .1000E+01   16  .1000E+01
   17  .0000E+00   18  .0000E+00   19  .0000E+00   20  .0000E+00   21  .0000E+00
22  .0000E+00   23  .0000E+00   24  .0000E+00
                                                DAY OF WEEK = SATURDAY
    1  .0000E+00    2  .0000E+00    3  .0000E+00    4  .0000E+00    5  .0000E+00
6  .0000E+00    7  .0000E+00    8  .0000E+00
    9  .0000E+00   10  .0000E+00   11  .0000E+00   12  .0000E+00   13  .0000E+00
14  .0000E+00   15  .0000E+00   16  .0000E+00
   17  .0000E+00   18  .0000E+00   19  .0000E+00   20  .0000E+00   21  .0000E+00
22  .0000E+00   23  .0000E+00   24  .0000E+00
                                                DAY OF WEEK = SUNDAY
    1  .0000E+00    2  .0000E+00    3  .0000E+00    4  .0000E+00    5  .0000E+00
6  .0000E+00    7  .0000E+00    8  .0000E+00
    9  .0000E+00   10  .0000E+00   11  .0000E+00   12  .0000E+00   13  .0000E+00
14  .0000E+00   15  .0000E+00   16  .0000E+00
   17  .0000E+00   18  .0000E+00   19  .0000E+00   20  .0000E+00   21  .0000E+00
22  .0000E+00   23  .0000E+00   24  .0000E+00
```

```
 *** AERMOD - VERSION 22112  ***   *** C:\Lakes\Project Files\Garvey\Garvey.isc
***        03/04/24
 *** AERMET - VERSION  16216 ***   ***
***        13:00:54

PAGE  91
 *** MODELOPTs:    RegDFAULT  CONC  ELEV  URBAN  ADJ_U*

                   * SOURCE EMISSION RATE SCALARS WHICH VARY DIURNALLY AND BY DAY
OF WEEK (HRDOW) *

 SOURCE ID = L0001867     ; SOURCE TYPE = VOLUME   :
  HOUR   SCALAR   HOUR   SCALAR   HOUR   SCALAR   HOUR   SCALAR   HOUR   SCALAR
HOUR   SCALAR   HOUR   SCALAR   HOUR   SCALAR
 - - - - - - - - - - - - - - - - - - - - - - - - - - - - - - - - - - - - - - - -
- - - - - - - - - - - - - - - - - - - - - - - - -
                                                DAY OF WEEK = WEEKDAY
    1  .0000E+00    2  .0000E+00    3  .0000E+00    4  .0000E+00    5  .0000E+00
6  .0000E+00    7  .1000E+01    8  .1000E+01
    9  .1000E+01   10  .1000E+01   11  .1000E+01   12  .1000E+01   13  .1000E+01
14  .1000E+01   15  .1000E+01   16  .1000E+01
   17  .0000E+00   18  .0000E+00   19  .0000E+00   20  .0000E+00   21  .0000E+00
22  .0000E+00   23  .0000E+00   24  .0000E+00
                                                DAY OF WEEK = SATURDAY
    1  .0000E+00    2  .0000E+00    3  .0000E+00    4  .0000E+00    5  .0000E+00
6  .0000E+00    7  .0000E+00    8  .0000E+00
    9  .0000E+00   10  .0000E+00   11  .0000E+00   12  .0000E+00   13  .0000E+00
14  .0000E+00   15  .0000E+00   16  .0000E+00
   17  .0000E+00   18  .0000E+00   19  .0000E+00   20  .0000E+00   21  .0000E+00
22  .0000E+00   23  .0000E+00   24  .0000E+00
                                                DAY OF WEEK = SUNDAY
    1  .0000E+00    2  .0000E+00    3  .0000E+00    4  .0000E+00    5  .0000E+00
6  .0000E+00    7  .0000E+00    8  .0000E+00
    9  .0000E+00   10  .0000E+00   11  .0000E+00   12  .0000E+00   13  .0000E+00
14  .0000E+00   15  .0000E+00   16  .0000E+00
   17  .0000E+00   18  .0000E+00   19  .0000E+00   20  .0000E+00   21  .0000E+00
22  .0000E+00   23  .0000E+00   24  .0000E+00
```

```
 *** AERMOD - VERSION 22112  ***   *** C:\Lakes\Project Files\Garvey\Garvey.isc
***        03/04/24
 *** AERMET - VERSION  16216 ***   ***
***        13:00:54

PAGE  92
 *** MODELOPTs:    RegDFAULT  CONC  ELEV  URBAN  ADJ_U*

                   * SOURCE EMISSION RATE SCALARS WHICH VARY DIURNALLY AND BY DAY
OF WEEK (HRDOW) *

 SOURCE ID = L0001868     ; SOURCE TYPE = VOLUME   :
  HOUR   SCALAR   HOUR   SCALAR   HOUR   SCALAR   HOUR   SCALAR   HOUR   SCALAR
HOUR   SCALAR   HOUR   SCALAR   HOUR   SCALAR
 - - - - - - - - - - - - - - - - - - - - - - - - - - - - - - - - - - - - - - - -
- - - - - - - - - - - - - - - - - - - - - - - - -
                                                DAY OF WEEK = WEEKDAY
    1  .0000E+00    2  .0000E+00    3  .0000E+00    4  .0000E+00    5  .0000E+00
6  .0000E+00    7  .1000E+01    8  .1000E+01
    9  .1000E+01   10  .1000E+01   11  .1000E+01   12  .1000E+01   13  .1000E+01
14  .1000E+01   15  .1000E+01   16  .1000E+01
   17  .0000E+00   18  .0000E+00   19  .0000E+00   20  .0000E+00   21  .0000E+00
22  .0000E+00   23  .0000E+00   24  .0000E+00
                                                DAY OF WEEK = SATURDAY
    1  .0000E+00    2  .0000E+00    3  .0000E+00    4  .0000E+00    5  .0000E+00
6  .0000E+00    7  .0000E+00    8  .0000E+00
    9  .0000E+00   10  .0000E+00   11  .0000E+00   12  .0000E+00   13  .0000E+00
14  .0000E+00   15  .0000E+00   16  .0000E+00
   17  .0000E+00   18  .0000E+00   19  .0000E+00   20  .0000E+00   21  .0000E+00
22  .0000E+00   23  .0000E+00   24  .0000E+00
                                                DAY OF WEEK = SUNDAY
    1  .0000E+00    2  .0000E+00    3  .0000E+00    4  .0000E+00    5  .0000E+00
6  .0000E+00    7  .0000E+00    8  .0000E+00
    9  .0000E+00   10  .0000E+00   11  .0000E+00   12  .0000E+00   13  .0000E+00
14  .0000E+00   15  .0000E+00   16  .0000E+00
   17  .0000E+00   18  .0000E+00   19  .0000E+00   20  .0000E+00   21  .0000E+00
22  .0000E+00   23  .0000E+00   24  .0000E+00
```

```
 *** AERMOD - VERSION 22112  ***   *** C:\Lakes\Project Files\Garvey\Garvey.isc
***        03/04/24
 *** AERMET - VERSION  16216 ***   ***
***        13:00:54

PAGE  93
 *** MODELOPTs:    RegDFAULT  CONC  ELEV  URBAN  ADJ_U*

                   * SOURCE EMISSION RATE SCALARS WHICH VARY DIURNALLY AND BY DAY
OF WEEK (HRDOW) *

 SOURCE ID = L0001869     ; SOURCE TYPE = VOLUME   :
  HOUR   SCALAR   HOUR   SCALAR   HOUR   SCALAR   HOUR   SCALAR   HOUR   SCALAR
HOUR   SCALAR   HOUR   SCALAR   HOUR   SCALAR
 - - - - - - - - - - - - - - - - - - - - - - - - - - - - - - - - - - - - - - - -
- - - - - - - - - - - - - - - - - - - - - - - - -
                                                DAY OF WEEK = WEEKDAY
    1  .0000E+00    2  .0000E+00    3  .0000E+00    4  .0000E+00    5  .0000E+00
6  .0000E+00    7  .1000E+01    8  .1000E+01
    9  .1000E+01   10  .1000E+01   11  .1000E+01   12  .1000E+01   13  .1000E+01
14  .1000E+01   15  .1000E+01   16  .1000E+01
   17  .0000E+00   18  .0000E+00   19  .0000E+00   20  .0000E+00   21  .0000E+00
22  .0000E+00   23  .0000E+00   24  .0000E+00
                                                DAY OF WEEK = SATURDAY
    1  .0000E+00    2  .0000E+00    3  .0000E+00    4  .0000E+00    5  .0000E+00
6  .0000E+00    7  .0000E+00    8  .0000E+00
    9  .0000E+00   10  .0000E+00   11  .0000E+00   12  .0000E+00   13  .0000E+00
14  .0000E+00   15  .0000E+00   16  .0000E+00
   17  .0000E+00   18  .0000E+00   19  .0000E+00   20  .0000E+00   21  .0000E+00
22  .0000E+00   23  .0000E+00   24  .0000E+00
                                                DAY OF WEEK = SUNDAY
    1  .0000E+00    2  .0000E+00    3  .0000E+00    4  .0000E+00    5  .0000E+00
6  .0000E+00    7  .0000E+00    8  .0000E+00
    9  .0000E+00   10  .0000E+00   11  .0000E+00   12  .0000E+00   13  .0000E+00
14  .0000E+00   15  .0000E+00   16  .0000E+00
   17  .0000E+00   18  .0000E+00   19  .0000E+00   20  .0000E+00   21  .0000E+00
22  .0000E+00   23  .0000E+00   24  .0000E+00
```

```
 *** AERMOD - VERSION 22112  ***   *** C:\Lakes\Project Files\Garvey\Garvey.isc
***        03/04/24
 *** AERMET - VERSION  16216 ***   ***
***        13:00:54

PAGE  94
 *** MODELOPTs:    RegDFAULT  CONC  ELEV  URBAN  ADJ_U*

                   * SOURCE EMISSION RATE SCALARS WHICH VARY DIURNALLY AND BY DAY
OF WEEK (HRDOW) *

 SOURCE ID = L0001870     ; SOURCE TYPE = VOLUME   :
  HOUR   SCALAR   HOUR   SCALAR   HOUR   SCALAR   HOUR   SCALAR   HOUR   SCALAR
HOUR   SCALAR   HOUR   SCALAR   HOUR   SCALAR
 - - - - - - - - - - - - - - - - - - - - - - - - - - - - - - - - - - - - - - - -
- - - - - - - - - - - - - - - - - - - - - - - - -
                                                DAY OF WEEK = WEEKDAY
    1  .0000E+00    2  .0000E+00    3  .0000E+00    4  .0000E+00    5  .0000E+00
6  .0000E+00    7  .1000E+01    8  .1000E+01
    9  .1000E+01   10  .1000E+01   11  .1000E+01   12  .1000E+01   13  .1000E+01
14  .1000E+01   15  .1000E+01   16  .1000E+01
   17  .0000E+00   18  .0000E+00   19  .0000E+00   20  .0000E+00   21  .0000E+00
22  .0000E+00   23  .0000E+00   24  .0000E+00
                                                DAY OF WEEK = SATURDAY
    1  .0000E+00    2  .0000E+00    3  .0000E+00    4  .0000E+00    5  .0000E+00
6  .0000E+00    7  .0000E+00    8  .0000E+00
    9  .0000E+00   10  .0000E+00   11  .0000E+00   12  .0000E+00   13  .0000E+00
14  .0000E+00   15  .0000E+00   16  .0000E+00
   17  .0000E+00   18  .0000E+00   19  .0000E+00   20  .0000E+00   21  .0000E+00
22  .0000E+00   23  .0000E+00   24  .0000E+00
                                                DAY OF WEEK = SUNDAY
    1  .0000E+00    2  .0000E+00    3  .0000E+00    4  .0000E+00    5  .0000E+00
6  .0000E+00    7  .0000E+00    8  .0000E+00
    9  .0000E+00   10  .0000E+00   11  .0000E+00   12  .0000E+00   13  .0000E+00
14  .0000E+00   15  .0000E+00   16  .0000E+00
   17  .0000E+00   18  .0000E+00   19  .0000E+00   20  .0000E+00   21  .0000E+00
22  .0000E+00   23  .0000E+00   24  .0000E+00
```

*** MODELOPTs: RegDFAULT CONC ELEV URBAN ADJ_U*

* SOURCE EMISSION RATE SCALARS WHICH VARY DIURNALLY AND BY DAY OF WEEK (HRDOW) *

SOURCE ID = L0001871 ; SOURCE TYPE = VOLUME :

```
  HOUR   SCALAR   HOUR   SCALAR   HOUR   SCALAR   HOUR   SCALAR   HOUR   SCALAR
HOUR   SCALAR   HOUR   SCALAR   HOUR   SCALAR
 - - - - - - - - - - - - - - - - - - - - - - - - - - - - - - - - - - - - - - - - -
- - - - - - - - - - - - - - - - - - - - - - - - - -
                                                DAY OF WEEK = WEEKDAY
    1  .0000E+00    2  .0000E+00    3  .0000E+00    4  .0000E+00    5  .0000E+00
6  .0000E+00    7  .1000E+01    8  .1000E+01
    9  .1000E+01   10  .1000E+01   11  .1000E+01   12  .1000E+01   13  .1000E+01
14  .1000E+01   15  .1000E+01   16  .1000E+01
   17  .0000E+00   18  .0000E+00   19  .0000E+00   20  .0000E+00   21  .0000E+00
22  .0000E+00   23  .0000E+00   24  .0000E+00
                                                DAY OF WEEK = SATURDAY
    1  .0000E+00    2  .0000E+00    3  .0000E+00    4  .0000E+00    5  .0000E+00
6  .0000E+00    7  .0000E+00    8  .0000E+00
    9  .0000E+00   10  .0000E+00   11  .0000E+00   12  .0000E+00   13  .0000E+00
14  .0000E+00   15  .0000E+00   16  .0000E+00
   17  .0000E+00   18  .0000E+00   19  .0000E+00   20  .0000E+00   21  .0000E+00
22  .0000E+00   23  .0000E+00   24  .0000E+00
                                                DAY OF WEEK = SUNDAY
    1  .0000E+00    2  .0000E+00    3  .0000E+00    4  .0000E+00    5  .0000E+00
6  .0000E+00    7  .0000E+00    8  .0000E+00
    9  .0000E+00   10  .0000E+00   11  .0000E+00   12  .0000E+00   13  .0000E+00
14  .0000E+00   15  .0000E+00   16  .0000E+00
   17  .0000E+00   18  .0000E+00   19  .0000E+00   20  .0000E+00   21  .0000E+00
22  .0000E+00   23  .0000E+00   24  .0000E+00
```

```
 *** AERMOD - VERSION 22112  ***   *** C:\Lakes\Project Files\Garvey\Garvey.isc
***        03/04/24
 *** AERMET - VERSION  16216 ***   ***
***        13:00:54

PAGE  96
 *** MODELOPTs:    RegDFAULT  CONC  ELEV  URBAN  ADJ_U*

                   * SOURCE EMISSION RATE SCALARS WHICH VARY DIURNALLY AND BY DAY
OF WEEK (HRDOW) *

 SOURCE ID = L0001872     ; SOURCE TYPE = VOLUME   :
  HOUR   SCALAR   HOUR   SCALAR   HOUR   SCALAR   HOUR   SCALAR   HOUR   SCALAR
HOUR   SCALAR   HOUR   SCALAR   HOUR   SCALAR
 - - - - - - - - - - - - - - - - - - - - - - - - - - - - - - - - - - - - - - - -
- - - - - - - - - - - - - - - - - - - - - - - - -
                                                DAY OF WEEK = WEEKDAY
    1  .0000E+00    2  .0000E+00    3  .0000E+00    4  .0000E+00    5  .0000E+00
6  .0000E+00    7  .1000E+01    8  .1000E+01
    9  .1000E+01   10  .1000E+01   11  .1000E+01   12  .1000E+01   13  .1000E+01
14  .1000E+01   15  .1000E+01   16  .1000E+01
   17  .0000E+00   18  .0000E+00   19  .0000E+00   20  .0000E+00   21  .0000E+00
22  .0000E+00   23  .0000E+00   24  .0000E+00
                                                DAY OF WEEK = SATURDAY
    1  .0000E+00    2  .0000E+00    3  .0000E+00    4  .0000E+00    5  .0000E+00
6  .0000E+00    7  .0000E+00    8  .0000E+00
    9  .0000E+00   10  .0000E+00   11  .0000E+00   12  .0000E+00   13  .0000E+00
14  .0000E+00   15  .0000E+00   16  .0000E+00
   17  .0000E+00   18  .0000E+00   19  .0000E+00   20  .0000E+00   21  .0000E+00
22  .0000E+00   23  .0000E+00   24  .0000E+00
                                                DAY OF WEEK = SUNDAY
    1  .0000E+00    2  .0000E+00    3  .0000E+00    4  .0000E+00    5  .0000E+00
6  .0000E+00    7  .0000E+00    8  .0000E+00
    9  .0000E+00   10  .0000E+00   11  .0000E+00   12  .0000E+00   13  .0000E+00
14  .0000E+00   15  .0000E+00   16  .0000E+00
   17  .0000E+00   18  .0000E+00   19  .0000E+00   20  .0000E+00   21  .0000E+00
22  .0000E+00   23  .0000E+00   24  .0000E+00
```

*** MODELOPTs: RegDFAULT CONC ELEV URBAN ADJ_U*

* SOURCE EMISSION RATE SCALARS WHICH VARY DIURNALLY AND BY DAY OF WEEK (HRDOW) *

SOURCE ID = L0001873 ; SOURCE TYPE = VOLUME :

```
  HOUR   SCALAR   HOUR   SCALAR   HOUR   SCALAR   HOUR   SCALAR   HOUR   SCALAR
HOUR   SCALAR   HOUR   SCALAR   HOUR   SCALAR
 - - - - - - - - - - - - - - - - - - - - - - - - - - - - - - - - - - - - - - - - -
- - - - - - - - - - - - - - - - - - - - - - - - - -
                                                DAY OF WEEK = WEEKDAY
    1  .0000E+00    2  .0000E+00    3  .0000E+00    4  .0000E+00    5  .0000E+00
6  .0000E+00    7  .1000E+01    8  .1000E+01
    9  .1000E+01   10  .1000E+01   11  .1000E+01   12  .1000E+01   13  .1000E+01
14  .1000E+01   15  .1000E+01   16  .1000E+01
   17  .0000E+00   18  .0000E+00   19  .0000E+00   20  .0000E+00   21  .0000E+00
22  .0000E+00   23  .0000E+00   24  .0000E+00
                                                DAY OF WEEK = SATURDAY
    1  .0000E+00    2  .0000E+00    3  .0000E+00    4  .0000E+00    5  .0000E+00
6  .0000E+00    7  .0000E+00    8  .0000E+00
    9  .0000E+00   10  .0000E+00   11  .0000E+00   12  .0000E+00   13  .0000E+00
14  .0000E+00   15  .0000E+00   16  .0000E+00
   17  .0000E+00   18  .0000E+00   19  .0000E+00   20  .0000E+00   21  .0000E+00
22  .0000E+00   23  .0000E+00   24  .0000E+00
                                                DAY OF WEEK = SUNDAY
    1  .0000E+00    2  .0000E+00    3  .0000E+00    4  .0000E+00    5  .0000E+00
6  .0000E+00    7  .0000E+00    8  .0000E+00
    9  .0000E+00   10  .0000E+00   11  .0000E+00   12  .0000E+00   13  .0000E+00
14  .0000E+00   15  .0000E+00   16  .0000E+00
   17  .0000E+00   18  .0000E+00   19  .0000E+00   20  .0000E+00   21  .0000E+00
22  .0000E+00   23  .0000E+00   24  .0000E+00
```

```
                   * SOURCE EMISSION RATE SCALARS WHICH VARY DIURNALLY AND BY DAY
OF WEEK (HRDOW) *

 SOURCE ID = L0001874     ; SOURCE TYPE = VOLUME   :
  HOUR   SCALAR   HOUR   SCALAR   HOUR   SCALAR   HOUR   SCALAR   HOUR   SCALAR
HOUR   SCALAR   HOUR   SCALAR   HOUR   SCALAR
 - - - - - - - - - - - - - - - - - - - - - - - - - - - - - - - - - - - - - - - -
- - - - - - - - - - - - - - - - - - - - - - - - -
                                                DAY OF WEEK = WEEKDAY
    1  .0000E+00    2  .0000E+00    3  .0000E+00    4  .0000E+00    5  .0000E+00
6  .0000E+00    7  .1000E+01    8  .1000E+01
    9  .1000E+01   10  .1000E+01   11  .1000E+01   12  .1000E+01   13  .1000E+01
14  .1000E+01   15  .1000E+01   16  .1000E+01
   17  .0000E+00   18  .0000E+00   19  .0000E+00   20  .0000E+00   21  .0000E+00
22  .0000E+00   23  .0000E+00   24  .0000E+00
                                                DAY OF WEEK = SATURDAY
    1  .0000E+00    2  .0000E+00    3  .0000E+00    4  .0000E+00    5  .0000E+00
6  .0000E+00    7  .0000E+00    8  .0000E+00
    9  .0000E+00   10  .0000E+00   11  .0000E+00   12  .0000E+00   13  .0000E+00
14  .0000E+00   15  .0000E+00   16  .0000E+00
   17  .0000E+00   18  .0000E+00   19  .0000E+00   20  .0000E+00   21  .0000E+00
22  .0000E+00   23  .0000E+00   24  .0000E+00
                                                DAY OF WEEK = SUNDAY
    1  .0000E+00    2  .0000E+00    3  .0000E+00    4  .0000E+00    5  .0000E+00
6  .0000E+00    7  .0000E+00    8  .0000E+00
    9  .0000E+00   10  .0000E+00   11  .0000E+00   12  .0000E+00   13  .0000E+00
14  .0000E+00   15  .0000E+00   16  .0000E+00
   17  .0000E+00   18  .0000E+00   19  .0000E+00   20  .0000E+00   21  .0000E+00
22  .0000E+00   23  .0000E+00   24  .0000E+00
```

```
 *** AERMOD - VERSION 22112  ***   *** C:\Lakes\Project Files\Garvey\Garvey.isc
***        03/04/24
 *** AERMET - VERSION  16216 ***   ***
***        13:00:54

PAGE  99
 *** MODELOPTs:    RegDFAULT  CONC  ELEV  URBAN  ADJ_U*

                   * SOURCE EMISSION RATE SCALARS WHICH VARY DIURNALLY AND BY DAY
OF WEEK (HRDOW) *

 SOURCE ID = L0001875     ; SOURCE TYPE = VOLUME   :
  HOUR   SCALAR   HOUR   SCALAR   HOUR   SCALAR   HOUR   SCALAR   HOUR   SCALAR
HOUR   SCALAR   HOUR   SCALAR   HOUR   SCALAR
 - - - - - - - - - - - - - - - - - - - - - - - - - - - - - - - - - - - - - - - -
- - - - - - - - - - - - - - - - - - - - - - - - -
                                                DAY OF WEEK = WEEKDAY
    1  .0000E+00    2  .0000E+00    3  .0000E+00    4  .0000E+00    5  .0000E+00
6  .0000E+00    7  .1000E+01    8  .1000E+01
    9  .1000E+01   10  .1000E+01   11  .1000E+01   12  .1000E+01   13  .1000E+01
14  .1000E+01   15  .1000E+01   16  .1000E+01
   17  .0000E+00   18  .0000E+00   19  .0000E+00   20  .0000E+00   21  .0000E+00
22  .0000E+00   23  .0000E+00   24  .0000E+00
                                                DAY OF WEEK = SATURDAY
    1  .0000E+00    2  .0000E+00    3  .0000E+00    4  .0000E+00    5  .0000E+00
6  .0000E+00    7  .0000E+00    8  .0000E+00
    9  .0000E+00   10  .0000E+00   11  .0000E+00   12  .0000E+00   13  .0000E+00
14  .0000E+00   15  .0000E+00   16  .0000E+00
   17  .0000E+00   18  .0000E+00   19  .0000E+00   20  .0000E+00   21  .0000E+00
22  .0000E+00   23  .0000E+00   24  .0000E+00
                                                DAY OF WEEK = SUNDAY
    1  .0000E+00    2  .0000E+00    3  .0000E+00    4  .0000E+00    5  .0000E+00
6  .0000E+00    7  .0000E+00    8  .0000E+00
    9  .0000E+00   10  .0000E+00   11  .0000E+00   12  .0000E+00   13  .0000E+00
14  .0000E+00   15  .0000E+00   16  .0000E+00
   17  .0000E+00   18  .0000E+00   19  .0000E+00   20  .0000E+00   21  .0000E+00
22  .0000E+00   23  .0000E+00   24  .0000E+00
```

*** MODELOPTs: RegDFAULT CONC ELEV URBAN ADJ_U*

* SOURCE EMISSION RATE SCALARS WHICH VARY DIURNALLY AND BY DAY OF WEEK (HRDOW) *

SOURCE ID = L0001876 ; SOURCE TYPE = VOLUME :

HOUR	SCALAR	HOUR	SCALAR	HOUR	SCALAR	HOUR	SCALAR	HOUR	SCALAR	HOUR	SCALAR	HOUR	SCALAR	HOUR	SCALAR

DAY OF WEEK = WEEKDAY

1	.0000E+00	2	.0000E+00	3	.0000E+00	4	.0000E+00	5	.0000E+00	6	.0000E+00	7	.1000E+01	8	.1000E+01
9	.1000E+01	10	.1000E+01	11	.1000E+01	12	.1000E+01	13	.1000E+01	14	.1000E+01	15	.1000E+01	16	.1000E+01
17	.0000E+00	18	.0000E+00	19	.0000E+00	20	.0000E+00	21	.0000E+00	22	.0000E+00	23	.0000E+00	24	.0000E+00

DAY OF WEEK = SATURDAY

1	.0000E+00	2	.0000E+00	3	.0000E+00	4	.0000E+00	5	.0000E+00	6	.0000E+00	7	.0000E+00	8	.0000E+00
9	.0000E+00	10	.0000E+00	11	.0000E+00	12	.0000E+00	13	.0000E+00	14	.0000E+00	15	.0000E+00	16	.0000E+00
17	.0000E+00	18	.0000E+00	19	.0000E+00	20	.0000E+00	21	.0000E+00	22	.0000E+00	23	.0000E+00	24	.0000E+00

DAY OF WEEK = SUNDAY

1	.0000E+00	2	.0000E+00	3	.0000E+00	4	.0000E+00	5	.0000E+00	6	.0000E+00	7	.0000E+00	8	.0000E+00
9	.0000E+00	10	.0000E+00	11	.0000E+00	12	.0000E+00	13	.0000E+00	14	.0000E+00	15	.0000E+00	16	.0000E+00
17	.0000E+00	18	.0000E+00	19	.0000E+00	20	.0000E+00	21	.0000E+00	22	.0000E+00	23	.0000E+00	24	.0000E+00

```
 *** AERMOD - VERSION 22112  ***   *** C:\Lakes\Project Files\Garvey\Garvey.isc
***        03/04/24
 *** AERMET - VERSION  16216 ***   ***
***        13:00:54

PAGE 101
 *** MODELOPTs:    RegDFAULT  CONC  ELEV  URBAN  ADJ_U*

                   * SOURCE EMISSION RATE SCALARS WHICH VARY DIURNALLY AND BY DAY
OF WEEK (HRDOW) *

 SOURCE ID = L0001877     ; SOURCE TYPE = VOLUME   :
  HOUR   SCALAR   HOUR   SCALAR   HOUR   SCALAR   HOUR   SCALAR   HOUR   SCALAR
HOUR   SCALAR   HOUR   SCALAR   HOUR   SCALAR
 - - - - - - - - - - - - - - - - - - - - - - - - - - - - - - - - - - - - - - - -
- - - - - - - - - - - - - - - - - - - - - - - - -
                                                DAY OF WEEK = WEEKDAY
    1  .0000E+00    2  .0000E+00    3  .0000E+00    4  .0000E+00    5  .0000E+00
6  .0000E+00    7  .1000E+01    8  .1000E+01
    9  .1000E+01   10  .1000E+01   11  .1000E+01   12  .1000E+01   13  .1000E+01
14  .1000E+01   15  .1000E+01   16  .1000E+01
   17  .0000E+00   18  .0000E+00   19  .0000E+00   20  .0000E+00   21  .0000E+00
22  .0000E+00   23  .0000E+00   24  .0000E+00
                                                DAY OF WEEK = SATURDAY
    1  .0000E+00    2  .0000E+00    3  .0000E+00    4  .0000E+00    5  .0000E+00
6  .0000E+00    7  .0000E+00    8  .0000E+00
    9  .0000E+00   10  .0000E+00   11  .0000E+00   12  .0000E+00   13  .0000E+00
14  .0000E+00   15  .0000E+00   16  .0000E+00
   17  .0000E+00   18  .0000E+00   19  .0000E+00   20  .0000E+00   21  .0000E+00
22  .0000E+00   23  .0000E+00   24  .0000E+00
                                                DAY OF WEEK = SUNDAY
    1  .0000E+00    2  .0000E+00    3  .0000E+00    4  .0000E+00    5  .0000E+00
6  .0000E+00    7  .0000E+00    8  .0000E+00
    9  .0000E+00   10  .0000E+00   11  .0000E+00   12  .0000E+00   13  .0000E+00
14  .0000E+00   15  .0000E+00   16  .0000E+00
   17  .0000E+00   18  .0000E+00   19  .0000E+00   20  .0000E+00   21  .0000E+00
22  .0000E+00   23  .0000E+00   24  .0000E+00
```

*** MODELOPTs: RegDFAULT CONC ELEV URBAN ADJ_U*

* SOURCE EMISSION RATE SCALARS WHICH VARY DIURNALLY AND BY DAY OF WEEK (HRDOW) *

SOURCE ID = L0001878 ; SOURCE TYPE = VOLUME :

HOUR	SCALAR	HOUR	SCALAR	HOUR	SCALAR	HOUR	SCALAR	HOUR	SCALAR	HOUR	SCALAR	HOUR	SCALAR	HOUR	SCALAR

DAY OF WEEK = WEEKDAY

1	.0000E+00	2	.0000E+00	3	.0000E+00	4	.0000E+00	5	.0000E+00	6	.0000E+00	7	.1000E+01	8	.1000E+01
9	.1000E+01	10	.1000E+01	11	.1000E+01	12	.1000E+01	13	.1000E+01	14	.1000E+01	15	.1000E+01	16	.1000E+01
17	.0000E+00	18	.0000E+00	19	.0000E+00	20	.0000E+00	21	.0000E+00	22	.0000E+00	23	.0000E+00	24	.0000E+00

DAY OF WEEK = SATURDAY

1	.0000E+00	2	.0000E+00	3	.0000E+00	4	.0000E+00	5	.0000E+00	6	.0000E+00	7	.0000E+00	8	.0000E+00
9	.0000E+00	10	.0000E+00	11	.0000E+00	12	.0000E+00	13	.0000E+00	14	.0000E+00	15	.0000E+00	16	.0000E+00
17	.0000E+00	18	.0000E+00	19	.0000E+00	20	.0000E+00	21	.0000E+00	22	.0000E+00	23	.0000E+00	24	.0000E+00

DAY OF WEEK = SUNDAY

1	.0000E+00	2	.0000E+00	3	.0000E+00	4	.0000E+00	5	.0000E+00	6	.0000E+00	7	.0000E+00	8	.0000E+00
9	.0000E+00	10	.0000E+00	11	.0000E+00	12	.0000E+00	13	.0000E+00	14	.0000E+00	15	.0000E+00	16	.0000E+00
17	.0000E+00	18	.0000E+00	19	.0000E+00	20	.0000E+00	21	.0000E+00	22	.0000E+00	23	.0000E+00	24	.0000E+00

```
 *** AERMOD - VERSION 22112  ***   *** C:\Lakes\Project Files\Garvey\Garvey.isc
***        03/04/24
 *** AERMET - VERSION  16216 ***   ***
***        13:00:54

PAGE 103
 *** MODELOPTs:    RegDFAULT  CONC  ELEV  URBAN  ADJ_U*

                   * SOURCE EMISSION RATE SCALARS WHICH VARY DIURNALLY AND BY DAY
OF WEEK (HRDOW) *

 SOURCE ID = L0001879     ; SOURCE TYPE = VOLUME   :
  HOUR   SCALAR   HOUR   SCALAR   HOUR   SCALAR   HOUR   SCALAR   HOUR   SCALAR
HOUR   SCALAR   HOUR   SCALAR   HOUR   SCALAR
 - - - - - - - - - - - - - - - - - - - - - - - - - - - - - - - - - - - - - - - -
- - - - - - - - - - - - - - - - - - - - - - - - -
                                                DAY OF WEEK = WEEKDAY
    1  .0000E+00    2  .0000E+00    3  .0000E+00    4  .0000E+00    5  .0000E+00
6  .0000E+00    7  .1000E+01    8  .1000E+01
    9  .1000E+01   10  .1000E+01   11  .1000E+01   12  .1000E+01   13  .1000E+01
14  .1000E+01   15  .1000E+01   16  .1000E+01
   17  .0000E+00   18  .0000E+00   19  .0000E+00   20  .0000E+00   21  .0000E+00
22  .0000E+00   23  .0000E+00   24  .0000E+00
                                                DAY OF WEEK = SATURDAY
    1  .0000E+00    2  .0000E+00    3  .0000E+00    4  .0000E+00    5  .0000E+00
6  .0000E+00    7  .0000E+00    8  .0000E+00
    9  .0000E+00   10  .0000E+00   11  .0000E+00   12  .0000E+00   13  .0000E+00
14  .0000E+00   15  .0000E+00   16  .0000E+00
   17  .0000E+00   18  .0000E+00   19  .0000E+00   20  .0000E+00   21  .0000E+00
22  .0000E+00   23  .0000E+00   24  .0000E+00
                                                DAY OF WEEK = SUNDAY
    1  .0000E+00    2  .0000E+00    3  .0000E+00    4  .0000E+00    5  .0000E+00
6  .0000E+00    7  .0000E+00    8  .0000E+00
    9  .0000E+00   10  .0000E+00   11  .0000E+00   12  .0000E+00   13  .0000E+00
14  .0000E+00   15  .0000E+00   16  .0000E+00
   17  .0000E+00   18  .0000E+00   19  .0000E+00   20  .0000E+00   21  .0000E+00
22  .0000E+00   23  .0000E+00   24  .0000E+00
```

```
 *** AERMOD - VERSION 22112  ***   *** C:\Lakes\Project Files\Garvey\Garvey.isc
***        03/04/24
 *** AERMET - VERSION  16216 ***   ***
***        13:00:54

PAGE 104
 *** MODELOPTs:    RegDFAULT  CONC  ELEV  URBAN  ADJ_U*

                   * SOURCE EMISSION RATE SCALARS WHICH VARY DIURNALLY AND BY DAY
OF WEEK (HRDOW) *

 SOURCE ID = L0001880     ; SOURCE TYPE = VOLUME   :
  HOUR   SCALAR   HOUR   SCALAR   HOUR   SCALAR   HOUR   SCALAR   HOUR   SCALAR
HOUR   SCALAR   HOUR   SCALAR   HOUR   SCALAR
 - - - - - - - - - - - - - - - - - - - - - - - - - - - - - - - - - - - - - - - -
- - - - - - - - - - - - - - - - - - - - - - - - -
                                                DAY OF WEEK = WEEKDAY
    1  .0000E+00    2  .0000E+00    3  .0000E+00    4  .0000E+00    5  .0000E+00
6  .0000E+00    7  .1000E+01    8  .1000E+01
    9  .1000E+01   10  .1000E+01   11  .1000E+01   12  .1000E+01   13  .1000E+01
14  .1000E+01   15  .1000E+01   16  .1000E+01
   17  .0000E+00   18  .0000E+00   19  .0000E+00   20  .0000E+00   21  .0000E+00
22  .0000E+00   23  .0000E+00   24  .0000E+00
                                                DAY OF WEEK = SATURDAY
    1  .0000E+00    2  .0000E+00    3  .0000E+00    4  .0000E+00    5  .0000E+00
6  .0000E+00    7  .0000E+00    8  .0000E+00
    9  .0000E+00   10  .0000E+00   11  .0000E+00   12  .0000E+00   13  .0000E+00
14  .0000E+00   15  .0000E+00   16  .0000E+00
   17  .0000E+00   18  .0000E+00   19  .0000E+00   20  .0000E+00   21  .0000E+00
22  .0000E+00   23  .0000E+00   24  .0000E+00
                                                DAY OF WEEK = SUNDAY
    1  .0000E+00    2  .0000E+00    3  .0000E+00    4  .0000E+00    5  .0000E+00
6  .0000E+00    7  .0000E+00    8  .0000E+00
    9  .0000E+00   10  .0000E+00   11  .0000E+00   12  .0000E+00   13  .0000E+00
14  .0000E+00   15  .0000E+00   16  .0000E+00
   17  .0000E+00   18  .0000E+00   19  .0000E+00   20  .0000E+00   21  .0000E+00
22  .0000E+00   23  .0000E+00   24  .0000E+00
```

```
 *** AERMOD - VERSION 22112  ***   *** C:\Lakes\Project Files\Garvey\Garvey.isc
***        03/04/24
 *** AERMET - VERSION  16216 ***   ***
***        13:00:54

PAGE 105
 *** MODELOPTs:    RegDFAULT  CONC  ELEV  URBAN  ADJ_U*

                   * SOURCE EMISSION RATE SCALARS WHICH VARY DIURNALLY AND BY DAY
OF WEEK (HRDOW) *

 SOURCE ID = L0001881     ; SOURCE TYPE = VOLUME   :
  HOUR   SCALAR   HOUR   SCALAR   HOUR   SCALAR   HOUR   SCALAR   HOUR   SCALAR
HOUR   SCALAR   HOUR   SCALAR   HOUR   SCALAR
 - - - - - - - - - - - - - - - - - - - - - - - - - - - - - - - - - - - - - - - -
- - - - - - - - - - - - - - - - - - - - - - - - -
                                                DAY OF WEEK = WEEKDAY
    1  .0000E+00    2  .0000E+00    3  .0000E+00    4  .0000E+00    5  .0000E+00
6  .0000E+00    7  .1000E+01    8  .1000E+01
    9  .1000E+01   10  .1000E+01   11  .1000E+01   12  .1000E+01   13  .1000E+01
14  .1000E+01   15  .1000E+01   16  .1000E+01
   17  .0000E+00   18  .0000E+00   19  .0000E+00   20  .0000E+00   21  .0000E+00
22  .0000E+00   23  .0000E+00   24  .0000E+00
                                                DAY OF WEEK = SATURDAY
    1  .0000E+00    2  .0000E+00    3  .0000E+00    4  .0000E+00    5  .0000E+00
6  .0000E+00    7  .0000E+00    8  .0000E+00
    9  .0000E+00   10  .0000E+00   11  .0000E+00   12  .0000E+00   13  .0000E+00
14  .0000E+00   15  .0000E+00   16  .0000E+00
   17  .0000E+00   18  .0000E+00   19  .0000E+00   20  .0000E+00   21  .0000E+00
22  .0000E+00   23  .0000E+00   24  .0000E+00
                                                DAY OF WEEK = SUNDAY
    1  .0000E+00    2  .0000E+00    3  .0000E+00    4  .0000E+00    5  .0000E+00
6  .0000E+00    7  .0000E+00    8  .0000E+00
    9  .0000E+00   10  .0000E+00   11  .0000E+00   12  .0000E+00   13  .0000E+00
14  .0000E+00   15  .0000E+00   16  .0000E+00
   17  .0000E+00   18  .0000E+00   19  .0000E+00   20  .0000E+00   21  .0000E+00
22  .0000E+00   23  .0000E+00   24  .0000E+00
```

*** MODELOPTs: RegDFAULT CONC ELEV URBAN ADJ_U*

* SOURCE EMISSION RATE SCALARS WHICH VARY DIURNALLY AND BY DAY OF WEEK (HRDOW) *

SOURCE ID = L0001882 ; SOURCE TYPE = VOLUME :

HOUR	SCALAR	HOUR	SCALAR	HOUR	SCALAR	HOUR	SCALAR	HOUR	SCALAR	HOUR	SCALAR	HOUR	SCALAR	HOUR	SCALAR

DAY OF WEEK = WEEKDAY

1	.0000E+00	2	.0000E+00	3	.0000E+00	4	.0000E+00	5	.0000E+00	6	.0000E+00	7	.1000E+01	8	.1000E+01
9	.1000E+01	10	.1000E+01	11	.1000E+01	12	.1000E+01	13	.1000E+01	14	.1000E+01	15	.1000E+01	16	.1000E+01
17	.0000E+00	18	.0000E+00	19	.0000E+00	20	.0000E+00	21	.0000E+00	22	.0000E+00	23	.0000E+00	24	.0000E+00

DAY OF WEEK = SATURDAY

1	.0000E+00	2	.0000E+00	3	.0000E+00	4	.0000E+00	5	.0000E+00	6	.0000E+00	7	.0000E+00	8	.0000E+00
9	.0000E+00	10	.0000E+00	11	.0000E+00	12	.0000E+00	13	.0000E+00	14	.0000E+00	15	.0000E+00	16	.0000E+00
17	.0000E+00	18	.0000E+00	19	.0000E+00	20	.0000E+00	21	.0000E+00	22	.0000E+00	23	.0000E+00	24	.0000E+00

DAY OF WEEK = SUNDAY

1	.0000E+00	2	.0000E+00	3	.0000E+00	4	.0000E+00	5	.0000E+00	6	.0000E+00	7	.0000E+00	8	.0000E+00
9	.0000E+00	10	.0000E+00	11	.0000E+00	12	.0000E+00	13	.0000E+00	14	.0000E+00	15	.0000E+00	16	.0000E+00
17	.0000E+00	18	.0000E+00	19	.0000E+00	20	.0000E+00	21	.0000E+00	22	.0000E+00	23	.0000E+00	24	.0000E+00

```
 *** AERMOD - VERSION 22112  ***   *** C:\Lakes\Project Files\Garvey\Garvey.isc
***        03/04/24
 *** AERMET - VERSION  16216 ***   ***
***        13:00:54

PAGE 107
 *** MODELOPTs:    RegDFAULT  CONC  ELEV  URBAN  ADJ_U*

                   * SOURCE EMISSION RATE SCALARS WHICH VARY DIURNALLY AND BY DAY
OF WEEK (HRDOW) *

 SOURCE ID = L0001883     ; SOURCE TYPE = VOLUME   :
  HOUR   SCALAR   HOUR   SCALAR   HOUR   SCALAR   HOUR   SCALAR   HOUR   SCALAR
HOUR   SCALAR   HOUR   SCALAR   HOUR   SCALAR
 - - - - - - - - - - - - - - - - - - - - - - - - - - - - - - - - - - - - - - - -
- - - - - - - - - - - - - - - - - - - - - - - - -
                                                DAY OF WEEK = WEEKDAY
    1  .0000E+00    2  .0000E+00    3  .0000E+00    4  .0000E+00    5  .0000E+00
6  .0000E+00    7  .1000E+01    8  .1000E+01
    9  .1000E+01   10  .1000E+01   11  .1000E+01   12  .1000E+01   13  .1000E+01
14  .1000E+01   15  .1000E+01   16  .1000E+01
   17  .0000E+00   18  .0000E+00   19  .0000E+00   20  .0000E+00   21  .0000E+00
22  .0000E+00   23  .0000E+00   24  .0000E+00
                                                DAY OF WEEK = SATURDAY
    1  .0000E+00    2  .0000E+00    3  .0000E+00    4  .0000E+00    5  .0000E+00
6  .0000E+00    7  .0000E+00    8  .0000E+00
    9  .0000E+00   10  .0000E+00   11  .0000E+00   12  .0000E+00   13  .0000E+00
14  .0000E+00   15  .0000E+00   16  .0000E+00
   17  .0000E+00   18  .0000E+00   19  .0000E+00   20  .0000E+00   21  .0000E+00
22  .0000E+00   23  .0000E+00   24  .0000E+00
                                                DAY OF WEEK = SUNDAY
    1  .0000E+00    2  .0000E+00    3  .0000E+00    4  .0000E+00    5  .0000E+00
6  .0000E+00    7  .0000E+00    8  .0000E+00
    9  .0000E+00   10  .0000E+00   11  .0000E+00   12  .0000E+00   13  .0000E+00
14  .0000E+00   15  .0000E+00   16  .0000E+00
   17  .0000E+00   18  .0000E+00   19  .0000E+00   20  .0000E+00   21  .0000E+00
22  .0000E+00   23  .0000E+00   24  .0000E+00
```

```
 *** AERMOD - VERSION 22112  ***   *** C:\Lakes\Project Files\Garvey\Garvey.isc
***        03/04/24
 *** AERMET - VERSION  16216 ***   ***
***        13:00:54

PAGE 108
 *** MODELOPTs:    RegDFAULT  CONC  ELEV  URBAN  ADJ_U*

                   * SOURCE EMISSION RATE SCALARS WHICH VARY DIURNALLY AND BY DAY
OF WEEK (HRDOW) *

 SOURCE ID = L0001884     ; SOURCE TYPE = VOLUME   :
  HOUR   SCALAR   HOUR   SCALAR   HOUR   SCALAR   HOUR   SCALAR   HOUR   SCALAR
HOUR   SCALAR   HOUR   SCALAR   HOUR   SCALAR
 - - - - - - - - - - - - - - - - - - - - - - - - - - - - - - - - - - - - - - - -
- - - - - - - - - - - - - - - - - - - - - - - - -
                                                DAY OF WEEK = WEEKDAY
    1  .0000E+00    2  .0000E+00    3  .0000E+00    4  .0000E+00    5  .0000E+00
6  .0000E+00    7  .1000E+01    8  .1000E+01
    9  .1000E+01   10  .1000E+01   11  .1000E+01   12  .1000E+01   13  .1000E+01
14  .1000E+01   15  .1000E+01   16  .1000E+01
   17  .0000E+00   18  .0000E+00   19  .0000E+00   20  .0000E+00   21  .0000E+00
22  .0000E+00   23  .0000E+00   24  .0000E+00
                                                DAY OF WEEK = SATURDAY
    1  .0000E+00    2  .0000E+00    3  .0000E+00    4  .0000E+00    5  .0000E+00
6  .0000E+00    7  .0000E+00    8  .0000E+00
    9  .0000E+00   10  .0000E+00   11  .0000E+00   12  .0000E+00   13  .0000E+00
14  .0000E+00   15  .0000E+00   16  .0000E+00
   17  .0000E+00   18  .0000E+00   19  .0000E+00   20  .0000E+00   21  .0000E+00
22  .0000E+00   23  .0000E+00   24  .0000E+00
                                                DAY OF WEEK = SUNDAY
    1  .0000E+00    2  .0000E+00    3  .0000E+00    4  .0000E+00    5  .0000E+00
6  .0000E+00    7  .0000E+00    8  .0000E+00
    9  .0000E+00   10  .0000E+00   11  .0000E+00   12  .0000E+00   13  .0000E+00
14  .0000E+00   15  .0000E+00   16  .0000E+00
   17  .0000E+00   18  .0000E+00   19  .0000E+00   20  .0000E+00   21  .0000E+00
22  .0000E+00   23  .0000E+00   24  .0000E+00
```

```
 *** AERMOD - VERSION 22112  ***   *** C:\Lakes\Project Files\Garvey\Garvey.isc
***        03/04/24
 *** AERMET - VERSION  16216 ***   ***
***        13:00:54

PAGE 109
 *** MODELOPTs:    RegDFAULT  CONC  ELEV  URBAN  ADJ_U*

                   * SOURCE EMISSION RATE SCALARS WHICH VARY DIURNALLY AND BY DAY
OF WEEK (HRDOW) *

 SOURCE ID = L0001885     ; SOURCE TYPE = VOLUME   :
  HOUR   SCALAR   HOUR   SCALAR   HOUR   SCALAR   HOUR   SCALAR   HOUR   SCALAR
HOUR   SCALAR   HOUR   SCALAR   HOUR   SCALAR
 - - - - - - - - - - - - - - - - - - - - - - - - - - - - - - - - - - - - - - - -
- - - - - - - - - - - - - - - - - - - - - - - - -
                                                DAY OF WEEK = WEEKDAY
    1  .0000E+00    2  .0000E+00    3  .0000E+00    4  .0000E+00    5  .0000E+00
6  .0000E+00    7  .1000E+01    8  .1000E+01
    9  .1000E+01   10  .1000E+01   11  .1000E+01   12  .1000E+01   13  .1000E+01
14  .1000E+01   15  .1000E+01   16  .1000E+01
   17  .0000E+00   18  .0000E+00   19  .0000E+00   20  .0000E+00   21  .0000E+00
22  .0000E+00   23  .0000E+00   24  .0000E+00
                                                DAY OF WEEK = SATURDAY
    1  .0000E+00    2  .0000E+00    3  .0000E+00    4  .0000E+00    5  .0000E+00
6  .0000E+00    7  .0000E+00    8  .0000E+00
    9  .0000E+00   10  .0000E+00   11  .0000E+00   12  .0000E+00   13  .0000E+00
14  .0000E+00   15  .0000E+00   16  .0000E+00
   17  .0000E+00   18  .0000E+00   19  .0000E+00   20  .0000E+00   21  .0000E+00
22  .0000E+00   23  .0000E+00   24  .0000E+00
                                                DAY OF WEEK = SUNDAY
    1  .0000E+00    2  .0000E+00    3  .0000E+00    4  .0000E+00    5  .0000E+00
6  .0000E+00    7  .0000E+00    8  .0000E+00
    9  .0000E+00   10  .0000E+00   11  .0000E+00   12  .0000E+00   13  .0000E+00
14  .0000E+00   15  .0000E+00   16  .0000E+00
   17  .0000E+00   18  .0000E+00   19  .0000E+00   20  .0000E+00   21  .0000E+00
22  .0000E+00   23  .0000E+00   24  .0000E+00
```

```
 *** AERMOD - VERSION 22112  ***   *** C:\Lakes\Project Files\Garvey\Garvey.isc
***        03/04/24
 *** AERMET - VERSION  16216 ***   ***
***        13:00:54

PAGE 110
 *** MODELOPTs:    RegDFAULT  CONC  ELEV  URBAN  ADJ_U*

                   * SOURCE EMISSION RATE SCALARS WHICH VARY DIURNALLY AND BY DAY
OF WEEK (HRDOW) *

 SOURCE ID = L0001886     ; SOURCE TYPE = VOLUME   :
  HOUR   SCALAR   HOUR   SCALAR   HOUR   SCALAR   HOUR   SCALAR   HOUR   SCALAR
HOUR   SCALAR   HOUR   SCALAR   HOUR   SCALAR
 - - - - - - - - - - - - - - - - - - - - - - - - - - - - - - - - - - - - - - - -
- - - - - - - - - - - - - - - - - - - - - - - - - -
                                                DAY OF WEEK = WEEKDAY
    1  .0000E+00    2  .0000E+00    3  .0000E+00    4  .0000E+00    5  .0000E+00
6  .0000E+00    7  .1000E+01    8  .1000E+01
    9  .1000E+01   10  .1000E+01   11  .1000E+01   12  .1000E+01   13  .1000E+01
14  .1000E+01   15  .1000E+01   16  .1000E+01
   17  .0000E+00   18  .0000E+00   19  .0000E+00   20  .0000E+00   21  .0000E+00
22  .0000E+00   23  .0000E+00   24  .0000E+00
                                                DAY OF WEEK = SATURDAY
    1  .0000E+00    2  .0000E+00    3  .0000E+00    4  .0000E+00    5  .0000E+00
6  .0000E+00    7  .0000E+00    8  .0000E+00
    9  .0000E+00   10  .0000E+00   11  .0000E+00   12  .0000E+00   13  .0000E+00
14  .0000E+00   15  .0000E+00   16  .0000E+00
   17  .0000E+00   18  .0000E+00   19  .0000E+00   20  .0000E+00   21  .0000E+00
22  .0000E+00   23  .0000E+00   24  .0000E+00
                                                DAY OF WEEK = SUNDAY
    1  .0000E+00    2  .0000E+00    3  .0000E+00    4  .0000E+00    5  .0000E+00
6  .0000E+00    7  .0000E+00    8  .0000E+00
    9  .0000E+00   10  .0000E+00   11  .0000E+00   12  .0000E+00   13  .0000E+00
14  .0000E+00   15  .0000E+00   16  .0000E+00
   17  .0000E+00   18  .0000E+00   19  .0000E+00   20  .0000E+00   21  .0000E+00
22  .0000E+00   23  .0000E+00   24  .0000E+00
```

```
 *** AERMOD - VERSION 22112  ***   *** C:\Lakes\Project Files\Garvey\Garvey.isc
***        03/04/24
 *** AERMET - VERSION  16216 ***   ***
***        13:00:54

PAGE 111
 *** MODELOPTs:    RegDFAULT  CONC  ELEV  URBAN  ADJ_U*

                   * SOURCE EMISSION RATE SCALARS WHICH VARY DIURNALLY AND BY DAY
OF WEEK (HRDOW) *

 SOURCE ID = L0001887     ; SOURCE TYPE = VOLUME   :
  HOUR   SCALAR   HOUR   SCALAR   HOUR   SCALAR   HOUR   SCALAR   HOUR   SCALAR
HOUR   SCALAR   HOUR   SCALAR   HOUR   SCALAR
 - - - - - - - - - - - - - - - - - - - - - - - - - - - - - - - - - - - - - - - -
- - - - - - - - - - - - - - - - - - - - - - - - -
                                                DAY OF WEEK = WEEKDAY
    1  .0000E+00    2  .0000E+00    3  .0000E+00    4  .0000E+00    5  .0000E+00
6  .0000E+00    7  .1000E+01    8  .1000E+01
    9  .1000E+01   10  .1000E+01   11  .1000E+01   12  .1000E+01   13  .1000E+01
14  .1000E+01   15  .1000E+01   16  .1000E+01
   17  .0000E+00   18  .0000E+00   19  .0000E+00   20  .0000E+00   21  .0000E+00
22  .0000E+00   23  .0000E+00   24  .0000E+00
                                                DAY OF WEEK = SATURDAY
    1  .0000E+00    2  .0000E+00    3  .0000E+00    4  .0000E+00    5  .0000E+00
6  .0000E+00    7  .0000E+00    8  .0000E+00
    9  .0000E+00   10  .0000E+00   11  .0000E+00   12  .0000E+00   13  .0000E+00
14  .0000E+00   15  .0000E+00   16  .0000E+00
   17  .0000E+00   18  .0000E+00   19  .0000E+00   20  .0000E+00   21  .0000E+00
22  .0000E+00   23  .0000E+00   24  .0000E+00
                                                DAY OF WEEK = SUNDAY
    1  .0000E+00    2  .0000E+00    3  .0000E+00    4  .0000E+00    5  .0000E+00
6  .0000E+00    7  .0000E+00    8  .0000E+00
    9  .0000E+00   10  .0000E+00   11  .0000E+00   12  .0000E+00   13  .0000E+00
14  .0000E+00   15  .0000E+00   16  .0000E+00
   17  .0000E+00   18  .0000E+00   19  .0000E+00   20  .0000E+00   21  .0000E+00
22  .0000E+00   23  .0000E+00   24  .0000E+00
```

*** MODELOPTs: RegDFAULT CONC ELEV URBAN ADJ_U*

* SOURCE EMISSION RATE SCALARS WHICH VARY DIURNALLY AND BY DAY OF WEEK (HRDOW) *

SOURCE ID = L0001888 ; SOURCE TYPE = VOLUME :

HOUR	SCALAR	HOUR	SCALAR	HOUR	SCALAR	HOUR	SCALAR	HOUR	SCALAR	HOUR	SCALAR	HOUR	SCALAR	HOUR	SCALAR

DAY OF WEEK = WEEKDAY

HOUR	SCALAR	HOUR	SCALAR	HOUR	SCALAR	HOUR	SCALAR	HOUR	SCALAR	HOUR	SCALAR	HOUR	SCALAR	HOUR	SCALAR
1	.0000E+00	2	.0000E+00	3	.0000E+00	4	.0000E+00	5	.0000E+00	6	.0000E+00	7	.1000E+01	8	.1000E+01
9	.1000E+01	10	.1000E+01	11	.1000E+01	12	.1000E+01	13	.1000E+01	14	.1000E+01	15	.1000E+01	16	.1000E+01
17	.0000E+00	18	.0000E+00	19	.0000E+00	20	.0000E+00	21	.0000E+00	22	.0000E+00	23	.0000E+00	24	.0000E+00

DAY OF WEEK = SATURDAY

HOUR	SCALAR	HOUR	SCALAR	HOUR	SCALAR	HOUR	SCALAR	HOUR	SCALAR	HOUR	SCALAR	HOUR	SCALAR	HOUR	SCALAR
1	.0000E+00	2	.0000E+00	3	.0000E+00	4	.0000E+00	5	.0000E+00	6	.0000E+00	7	.0000E+00	8	.0000E+00
9	.0000E+00	10	.0000E+00	11	.0000E+00	12	.0000E+00	13	.0000E+00	14	.0000E+00	15	.0000E+00	16	.0000E+00
17	.0000E+00	18	.0000E+00	19	.0000E+00	20	.0000E+00	21	.0000E+00	22	.0000E+00	23	.0000E+00	24	.0000E+00

DAY OF WEEK = SUNDAY

HOUR	SCALAR	HOUR	SCALAR	HOUR	SCALAR	HOUR	SCALAR	HOUR	SCALAR	HOUR	SCALAR	HOUR	SCALAR	HOUR	SCALAR
1	.0000E+00	2	.0000E+00	3	.0000E+00	4	.0000E+00	5	.0000E+00	6	.0000E+00	7	.0000E+00	8	.0000E+00
9	.0000E+00	10	.0000E+00	11	.0000E+00	12	.0000E+00	13	.0000E+00	14	.0000E+00	15	.0000E+00	16	.0000E+00
17	.0000E+00	18	.0000E+00	19	.0000E+00	20	.0000E+00	21	.0000E+00	22	.0000E+00	23	.0000E+00	24	.0000E+00

```
 *** AERMOD - VERSION 22112  ***   *** C:\Lakes\Project Files\Garvey\Garvey.isc
***        03/04/24
 *** AERMET - VERSION  16216 ***   ***
***        13:00:54

PAGE 113
 *** MODELOPTs:    RegDFAULT  CONC  ELEV  URBAN  ADJ_U*

                   * SOURCE EMISSION RATE SCALARS WHICH VARY DIURNALLY AND BY DAY
OF WEEK (HRDOW) *

 SOURCE ID = L0001889     ; SOURCE TYPE = VOLUME   :
  HOUR   SCALAR   HOUR   SCALAR   HOUR   SCALAR   HOUR   SCALAR   HOUR   SCALAR
HOUR   SCALAR   HOUR   SCALAR   HOUR   SCALAR
 - - - - - - - - - - - - - - - - - - - - - - - - - - - - - - - - - - - - - - - -
- - - - - - - - - - - - - - - - - - - - - - - - -
                                                DAY OF WEEK = WEEKDAY
    1  .0000E+00    2  .0000E+00    3  .0000E+00    4  .0000E+00    5  .0000E+00
6  .0000E+00    7  .1000E+01    8  .1000E+01
    9  .1000E+01   10  .1000E+01   11  .1000E+01   12  .1000E+01   13  .1000E+01
14  .1000E+01   15  .1000E+01   16  .1000E+01
   17  .0000E+00   18  .0000E+00   19  .0000E+00   20  .0000E+00   21  .0000E+00
22  .0000E+00   23  .0000E+00   24  .0000E+00
                                                DAY OF WEEK = SATURDAY
    1  .0000E+00    2  .0000E+00    3  .0000E+00    4  .0000E+00    5  .0000E+00
6  .0000E+00    7  .0000E+00    8  .0000E+00
    9  .0000E+00   10  .0000E+00   11  .0000E+00   12  .0000E+00   13  .0000E+00
14  .0000E+00   15  .0000E+00   16  .0000E+00
   17  .0000E+00   18  .0000E+00   19  .0000E+00   20  .0000E+00   21  .0000E+00
22  .0000E+00   23  .0000E+00   24  .0000E+00
                                                DAY OF WEEK = SUNDAY
    1  .0000E+00    2  .0000E+00    3  .0000E+00    4  .0000E+00    5  .0000E+00
6  .0000E+00    7  .0000E+00    8  .0000E+00
    9  .0000E+00   10  .0000E+00   11  .0000E+00   12  .0000E+00   13  .0000E+00
14  .0000E+00   15  .0000E+00   16  .0000E+00
   17  .0000E+00   18  .0000E+00   19  .0000E+00   20  .0000E+00   21  .0000E+00
22  .0000E+00   23  .0000E+00   24  .0000E+00
```

*** MODELOPTs: RegDFAULT CONC ELEV URBAN ADJ_U*

* SOURCE EMISSION RATE SCALARS WHICH VARY DIURNALLY AND BY DAY OF WEEK (HRDOW) *

SOURCE ID = L0001890 ; SOURCE TYPE = VOLUME :

HOUR	SCALAR	HOUR	SCALAR	HOUR	SCALAR	HOUR	SCALAR	HOUR	SCALAR	HOUR	SCALAR	HOUR	SCALAR	HOUR	SCALAR

DAY OF WEEK = WEEKDAY

1	.0000E+00	2	.0000E+00	3	.0000E+00	4	.0000E+00	5	.0000E+00	6	.0000E+00	7	.1000E+01	8	.1000E+01
9	.1000E+01	10	.1000E+01	11	.1000E+01	12	.1000E+01	13	.1000E+01	14	.1000E+01	15	.1000E+01	16	.1000E+01
17	.0000E+00	18	.0000E+00	19	.0000E+00	20	.0000E+00	21	.0000E+00	22	.0000E+00	23	.0000E+00	24	.0000E+00

DAY OF WEEK = SATURDAY

1	.0000E+00	2	.0000E+00	3	.0000E+00	4	.0000E+00	5	.0000E+00	6	.0000E+00	7	.0000E+00	8	.0000E+00
9	.0000E+00	10	.0000E+00	11	.0000E+00	12	.0000E+00	13	.0000E+00	14	.0000E+00	15	.0000E+00	16	.0000E+00
17	.0000E+00	18	.0000E+00	19	.0000E+00	20	.0000E+00	21	.0000E+00	22	.0000E+00	23	.0000E+00	24	.0000E+00

DAY OF WEEK = SUNDAY

1	.0000E+00	2	.0000E+00	3	.0000E+00	4	.0000E+00	5	.0000E+00	6	.0000E+00	7	.0000E+00	8	.0000E+00
9	.0000E+00	10	.0000E+00	11	.0000E+00	12	.0000E+00	13	.0000E+00	14	.0000E+00	15	.0000E+00	16	.0000E+00
17	.0000E+00	18	.0000E+00	19	.0000E+00	20	.0000E+00	21	.0000E+00	22	.0000E+00	23	.0000E+00	24	.0000E+00

```
 *** AERMOD - VERSION 22112  ***   *** C:\Lakes\Project Files\Garvey\Garvey.isc
***        03/04/24
 *** AERMET - VERSION  16216 ***   ***
***        13:00:54

PAGE 115
 *** MODELOPTs:    RegDFAULT  CONC  ELEV  URBAN  ADJ_U*

                   * SOURCE EMISSION RATE SCALARS WHICH VARY DIURNALLY AND BY DAY
OF WEEK (HRDOW) *

 SOURCE ID = L0001891     ; SOURCE TYPE = VOLUME   :
  HOUR   SCALAR   HOUR   SCALAR   HOUR   SCALAR   HOUR   SCALAR   HOUR   SCALAR
HOUR   SCALAR   HOUR   SCALAR   HOUR   SCALAR
 - - - - - - - - - - - - - - - - - - - - - - - - - - - - - - - - - - - - - - - -
- - - - - - - - - - - - - - - - - - - - - - - - - -
                                                DAY OF WEEK = WEEKDAY
    1  .0000E+00    2  .0000E+00    3  .0000E+00    4  .0000E+00    5  .0000E+00
6  .0000E+00    7  .1000E+01    8  .1000E+01
    9  .1000E+01   10  .1000E+01   11  .1000E+01   12  .1000E+01   13  .1000E+01
14  .1000E+01   15  .1000E+01   16  .1000E+01
   17  .0000E+00   18  .0000E+00   19  .0000E+00   20  .0000E+00   21  .0000E+00
22  .0000E+00   23  .0000E+00   24  .0000E+00
                                                DAY OF WEEK = SATURDAY
    1  .0000E+00    2  .0000E+00    3  .0000E+00    4  .0000E+00    5  .0000E+00
6  .0000E+00    7  .0000E+00    8  .0000E+00
    9  .0000E+00   10  .0000E+00   11  .0000E+00   12  .0000E+00   13  .0000E+00
14  .0000E+00   15  .0000E+00   16  .0000E+00
   17  .0000E+00   18  .0000E+00   19  .0000E+00   20  .0000E+00   21  .0000E+00
22  .0000E+00   23  .0000E+00   24  .0000E+00
                                                DAY OF WEEK = SUNDAY
    1  .0000E+00    2  .0000E+00    3  .0000E+00    4  .0000E+00    5  .0000E+00
6  .0000E+00    7  .0000E+00    8  .0000E+00
    9  .0000E+00   10  .0000E+00   11  .0000E+00   12  .0000E+00   13  .0000E+00
14  .0000E+00   15  .0000E+00   16  .0000E+00
   17  .0000E+00   18  .0000E+00   19  .0000E+00   20  .0000E+00   21  .0000E+00
22  .0000E+00   23  .0000E+00   24  .0000E+00
```

*** MODELOPTs: RegDFAULT CONC ELEV URBAN ADJ_U*

* SOURCE EMISSION RATE SCALARS WHICH VARY DIURNALLY AND BY DAY OF WEEK (HRDOW) *

SOURCE ID = L0001892 ; SOURCE TYPE = VOLUME :

HOUR	SCALAR	HOUR	SCALAR	HOUR	SCALAR	HOUR	SCALAR	HOUR	SCALAR	HOUR	SCALAR	HOUR	SCALAR	HOUR	SCALAR

DAY OF WEEK = WEEKDAY

1	.0000E+00	2	.0000E+00	3	.0000E+00	4	.0000E+00	5	.0000E+00	6	.0000E+00	7	.1000E+01	8	.1000E+01
9	.1000E+01	10	.1000E+01	11	.1000E+01	12	.1000E+01	13	.1000E+01	14	.1000E+01	15	.1000E+01	16	.1000E+01
17	.0000E+00	18	.0000E+00	19	.0000E+00	20	.0000E+00	21	.0000E+00	22	.0000E+00	23	.0000E+00	24	.0000E+00

DAY OF WEEK = SATURDAY

1	.0000E+00	2	.0000E+00	3	.0000E+00	4	.0000E+00	5	.0000E+00	6	.0000E+00	7	.0000E+00	8	.0000E+00
9	.0000E+00	10	.0000E+00	11	.0000E+00	12	.0000E+00	13	.0000E+00	14	.0000E+00	15	.0000E+00	16	.0000E+00
17	.0000E+00	18	.0000E+00	19	.0000E+00	20	.0000E+00	21	.0000E+00	22	.0000E+00	23	.0000E+00	24	.0000E+00

DAY OF WEEK = SUNDAY

1	.0000E+00	2	.0000E+00	3	.0000E+00	4	.0000E+00	5	.0000E+00	6	.0000E+00	7	.0000E+00	8	.0000E+00
9	.0000E+00	10	.0000E+00	11	.0000E+00	12	.0000E+00	13	.0000E+00	14	.0000E+00	15	.0000E+00	16	.0000E+00
17	.0000E+00	18	.0000E+00	19	.0000E+00	20	.0000E+00	21	.0000E+00	22	.0000E+00	23	.0000E+00	24	.0000E+00

*** MODELOPTs: RegDFAULT CONC ELEV URBAN ADJ_U*

* SOURCE EMISSION RATE SCALARS WHICH VARY DIURNALLY AND BY DAY OF WEEK (HRDOW) *

SOURCE ID = L0001893 ; SOURCE TYPE = VOLUME :

HOUR	SCALAR	HOUR	SCALAR	HOUR	SCALAR	HOUR	SCALAR	HOUR	SCALAR	HOUR	SCALAR	HOUR	SCALAR	HOUR	SCALAR

DAY OF WEEK = WEEKDAY

1	.0000E+00	2	.0000E+00	3	.0000E+00	4	.0000E+00	5	.0000E+00	6	.0000E+00	7	.1000E+01	8	.1000E+01
9	.1000E+01	10	.1000E+01	11	.1000E+01	12	.1000E+01	13	.1000E+01	14	.1000E+01	15	.1000E+01	16	.1000E+01
17	.0000E+00	18	.0000E+00	19	.0000E+00	20	.0000E+00	21	.0000E+00	22	.0000E+00	23	.0000E+00	24	.0000E+00

DAY OF WEEK = SATURDAY

1	.0000E+00	2	.0000E+00	3	.0000E+00	4	.0000E+00	5	.0000E+00	6	.0000E+00	7	.0000E+00	8	.0000E+00
9	.0000E+00	10	.0000E+00	11	.0000E+00	12	.0000E+00	13	.0000E+00	14	.0000E+00	15	.0000E+00	16	.0000E+00
17	.0000E+00	18	.0000E+00	19	.0000E+00	20	.0000E+00	21	.0000E+00	22	.0000E+00	23	.0000E+00	24	.0000E+00

DAY OF WEEK = SUNDAY

1	.0000E+00	2	.0000E+00	3	.0000E+00	4	.0000E+00	5	.0000E+00	6	.0000E+00	7	.0000E+00	8	.0000E+00
9	.0000E+00	10	.0000E+00	11	.0000E+00	12	.0000E+00	13	.0000E+00	14	.0000E+00	15	.0000E+00	16	.0000E+00
17	.0000E+00	18	.0000E+00	19	.0000E+00	20	.0000E+00	21	.0000E+00	22	.0000E+00	23	.0000E+00	24	.0000E+00

*** MODELOPTs: RegDFAULT CONC ELEV URBAN ADJ_U*

* SOURCE EMISSION RATE SCALARS WHICH VARY DIURNALLY AND BY DAY OF WEEK (HRDOW) *

SOURCE ID = L0001894 ; SOURCE TYPE = VOLUME :

```
  HOUR   SCALAR   HOUR   SCALAR   HOUR   SCALAR   HOUR   SCALAR   HOUR   SCALAR
HOUR   SCALAR   HOUR   SCALAR   HOUR   SCALAR
 - - - - - - - - - - - - - - - - - - - - - - - - - - - - - - - - - - - - - - - - -
- - - - - - - - - - - - - - - - - - - - - - - - - -
                                                DAY OF WEEK = WEEKDAY
    1  .0000E+00    2  .0000E+00    3  .0000E+00    4  .0000E+00    5  .0000E+00
6  .0000E+00    7  .1000E+01    8  .1000E+01
    9  .1000E+01   10  .1000E+01   11  .1000E+01   12  .1000E+01   13  .1000E+01
14  .1000E+01   15  .1000E+01   16  .1000E+01
   17  .0000E+00   18  .0000E+00   19  .0000E+00   20  .0000E+00   21  .0000E+00
22  .0000E+00   23  .0000E+00   24  .0000E+00
                                                DAY OF WEEK = SATURDAY
    1  .0000E+00    2  .0000E+00    3  .0000E+00    4  .0000E+00    5  .0000E+00
6  .0000E+00    7  .0000E+00    8  .0000E+00
    9  .0000E+00   10  .0000E+00   11  .0000E+00   12  .0000E+00   13  .0000E+00
14  .0000E+00   15  .0000E+00   16  .0000E+00
   17  .0000E+00   18  .0000E+00   19  .0000E+00   20  .0000E+00   21  .0000E+00
22  .0000E+00   23  .0000E+00   24  .0000E+00
                                                DAY OF WEEK = SUNDAY
    1  .0000E+00    2  .0000E+00    3  .0000E+00    4  .0000E+00    5  .0000E+00
6  .0000E+00    7  .0000E+00    8  .0000E+00
    9  .0000E+00   10  .0000E+00   11  .0000E+00   12  .0000E+00   13  .0000E+00
14  .0000E+00   15  .0000E+00   16  .0000E+00
   17  .0000E+00   18  .0000E+00   19  .0000E+00   20  .0000E+00   21  .0000E+00
22  .0000E+00   23  .0000E+00   24  .0000E+00
```

*** MODELOPTs: RegDFAULT CONC ELEV URBAN ADJ_U*

* SOURCE EMISSION RATE SCALARS WHICH VARY DIURNALLY AND BY DAY OF WEEK (HRDOW) *

SOURCE ID = L0001895 ; SOURCE TYPE = VOLUME :

HOUR	SCALAR	HOUR	SCALAR	HOUR	SCALAR	HOUR	SCALAR	HOUR	SCALAR	HOUR	SCALAR	HOUR	SCALAR	HOUR	SCALAR

DAY OF WEEK = WEEKDAY

1	.0000E+00	2	.0000E+00	3	.0000E+00	4	.0000E+00	5	.0000E+00	6	.0000E+00	7	.1000E+01	8	.1000E+01
9	.1000E+01	10	.1000E+01	11	.1000E+01	12	.1000E+01	13	.1000E+01	14	.1000E+01	15	.1000E+01	16	.1000E+01
17	.0000E+00	18	.0000E+00	19	.0000E+00	20	.0000E+00	21	.0000E+00	22	.0000E+00	23	.0000E+00	24	.0000E+00

DAY OF WEEK = SATURDAY

1	.0000E+00	2	.0000E+00	3	.0000E+00	4	.0000E+00	5	.0000E+00	6	.0000E+00	7	.0000E+00	8	.0000E+00
9	.0000E+00	10	.0000E+00	11	.0000E+00	12	.0000E+00	13	.0000E+00	14	.0000E+00	15	.0000E+00	16	.0000E+00
17	.0000E+00	18	.0000E+00	19	.0000E+00	20	.0000E+00	21	.0000E+00	22	.0000E+00	23	.0000E+00	24	.0000E+00

DAY OF WEEK = SUNDAY

1	.0000E+00	2	.0000E+00	3	.0000E+00	4	.0000E+00	5	.0000E+00	6	.0000E+00	7	.0000E+00	8	.0000E+00
9	.0000E+00	10	.0000E+00	11	.0000E+00	12	.0000E+00	13	.0000E+00	14	.0000E+00	15	.0000E+00	16	.0000E+00
17	.0000E+00	18	.0000E+00	19	.0000E+00	20	.0000E+00	21	.0000E+00	22	.0000E+00	23	.0000E+00	24	.0000E+00

```
 *** AERMOD - VERSION 22112  ***   *** C:\Lakes\Project Files\Garvey\Garvey.isc
***        03/04/24
 *** AERMET - VERSION  16216 ***   ***
***        13:00:54

PAGE 120
 *** MODELOPTs:    RegDFAULT  CONC  ELEV  URBAN  ADJ_U*

                   * SOURCE EMISSION RATE SCALARS WHICH VARY DIURNALLY AND BY DAY
OF WEEK (HRDOW) *

 SOURCE ID = L0001896     ; SOURCE TYPE = VOLUME   :
  HOUR   SCALAR   HOUR   SCALAR   HOUR   SCALAR   HOUR   SCALAR   HOUR   SCALAR
HOUR   SCALAR   HOUR   SCALAR   HOUR   SCALAR
 - - - - - - - - - - - - - - - - - - - - - - - - - - - - - - - - - - - - - - - -
- - - - - - - - - - - - - - - - - - - - - - - - -
                                                DAY OF WEEK = WEEKDAY
    1  .0000E+00    2  .0000E+00    3  .0000E+00    4  .0000E+00    5  .0000E+00
6  .0000E+00    7  .1000E+01    8  .1000E+01
    9  .1000E+01   10  .1000E+01   11  .1000E+01   12  .1000E+01   13  .1000E+01
14  .1000E+01   15  .1000E+01   16  .1000E+01
   17  .0000E+00   18  .0000E+00   19  .0000E+00   20  .0000E+00   21  .0000E+00
22  .0000E+00   23  .0000E+00   24  .0000E+00
                                                DAY OF WEEK = SATURDAY
    1  .0000E+00    2  .0000E+00    3  .0000E+00    4  .0000E+00    5  .0000E+00
6  .0000E+00    7  .0000E+00    8  .0000E+00
    9  .0000E+00   10  .0000E+00   11  .0000E+00   12  .0000E+00   13  .0000E+00
14  .0000E+00   15  .0000E+00   16  .0000E+00
   17  .0000E+00   18  .0000E+00   19  .0000E+00   20  .0000E+00   21  .0000E+00
22  .0000E+00   23  .0000E+00   24  .0000E+00
                                                DAY OF WEEK = SUNDAY
    1  .0000E+00    2  .0000E+00    3  .0000E+00    4  .0000E+00    5  .0000E+00
6  .0000E+00    7  .0000E+00    8  .0000E+00
    9  .0000E+00   10  .0000E+00   11  .0000E+00   12  .0000E+00   13  .0000E+00
14  .0000E+00   15  .0000E+00   16  .0000E+00
   17  .0000E+00   18  .0000E+00   19  .0000E+00   20  .0000E+00   21  .0000E+00
22  .0000E+00   23  .0000E+00   24  .0000E+00
```

```
 *** AERMOD - VERSION 22112  ***   *** C:\Lakes\Project Files\Garvey\Garvey.isc
***        03/04/24
 *** AERMET - VERSION  16216 ***   ***
***        13:00:54

PAGE 121
 *** MODELOPTs:    RegDFAULT  CONC  ELEV  URBAN  ADJ_U*

                   * SOURCE EMISSION RATE SCALARS WHICH VARY DIURNALLY AND BY DAY
OF WEEK (HRDOW) *

 SOURCE ID = L0001897     ; SOURCE TYPE = VOLUME   :
  HOUR   SCALAR   HOUR   SCALAR   HOUR   SCALAR   HOUR   SCALAR   HOUR   SCALAR
HOUR   SCALAR   HOUR   SCALAR   HOUR   SCALAR
 - - - - - - - - - - - - - - - - - - - - - - - - - - - - - - - - - - - - - - - -
- - - - - - - - - - - - - - - - - - - - - - - - -
                                                DAY OF WEEK = WEEKDAY
    1  .0000E+00    2  .0000E+00    3  .0000E+00    4  .0000E+00    5  .0000E+00
6  .0000E+00    7  .1000E+01    8  .1000E+01
    9  .1000E+01   10  .1000E+01   11  .1000E+01   12  .1000E+01   13  .1000E+01
14  .1000E+01   15  .1000E+01   16  .1000E+01
   17  .0000E+00   18  .0000E+00   19  .0000E+00   20  .0000E+00   21  .0000E+00
22  .0000E+00   23  .0000E+00   24  .0000E+00
                                                DAY OF WEEK = SATURDAY
    1  .0000E+00    2  .0000E+00    3  .0000E+00    4  .0000E+00    5  .0000E+00
6  .0000E+00    7  .0000E+00    8  .0000E+00
    9  .0000E+00   10  .0000E+00   11  .0000E+00   12  .0000E+00   13  .0000E+00
14  .0000E+00   15  .0000E+00   16  .0000E+00
   17  .0000E+00   18  .0000E+00   19  .0000E+00   20  .0000E+00   21  .0000E+00
22  .0000E+00   23  .0000E+00   24  .0000E+00
                                                DAY OF WEEK = SUNDAY
    1  .0000E+00    2  .0000E+00    3  .0000E+00    4  .0000E+00    5  .0000E+00
6  .0000E+00    7  .0000E+00    8  .0000E+00
    9  .0000E+00   10  .0000E+00   11  .0000E+00   12  .0000E+00   13  .0000E+00
14  .0000E+00   15  .0000E+00   16  .0000E+00
   17  .0000E+00   18  .0000E+00   19  .0000E+00   20  .0000E+00   21  .0000E+00
22  .0000E+00   23  .0000E+00   24  .0000E+00
```

*** MODELOPTs: RegDFAULT CONC ELEV URBAN ADJ_U*

* SOURCE EMISSION RATE SCALARS WHICH VARY DIURNALLY AND BY DAY OF WEEK (HRDOW) *

SOURCE ID = L0001898 ; SOURCE TYPE = VOLUME :

HOUR	SCALAR	HOUR	SCALAR	HOUR	SCALAR	HOUR	SCALAR	HOUR	SCALAR	HOUR	SCALAR	HOUR	SCALAR	HOUR	SCALAR

DAY OF WEEK = WEEKDAY

1	.0000E+00	2	.0000E+00	3	.0000E+00	4	.0000E+00	5	.0000E+00	6	.0000E+00	7	.1000E+01	8	.1000E+01
9	.1000E+01	10	.1000E+01	11	.1000E+01	12	.1000E+01	13	.1000E+01	14	.1000E+01	15	.1000E+01	16	.1000E+01
17	.0000E+00	18	.0000E+00	19	.0000E+00	20	.0000E+00	21	.0000E+00	22	.0000E+00	23	.0000E+00	24	.0000E+00

DAY OF WEEK = SATURDAY

1	.0000E+00	2	.0000E+00	3	.0000E+00	4	.0000E+00	5	.0000E+00	6	.0000E+00	7	.0000E+00	8	.0000E+00
9	.0000E+00	10	.0000E+00	11	.0000E+00	12	.0000E+00	13	.0000E+00	14	.0000E+00	15	.0000E+00	16	.0000E+00
17	.0000E+00	18	.0000E+00	19	.0000E+00	20	.0000E+00	21	.0000E+00	22	.0000E+00	23	.0000E+00	24	.0000E+00

DAY OF WEEK = SUNDAY

1	.0000E+00	2	.0000E+00	3	.0000E+00	4	.0000E+00	5	.0000E+00	6	.0000E+00	7	.0000E+00	8	.0000E+00
9	.0000E+00	10	.0000E+00	11	.0000E+00	12	.0000E+00	13	.0000E+00	14	.0000E+00	15	.0000E+00	16	.0000E+00
17	.0000E+00	18	.0000E+00	19	.0000E+00	20	.0000E+00	21	.0000E+00	22	.0000E+00	23	.0000E+00	24	.0000E+00

```
 *** AERMOD - VERSION 22112  ***   *** C:\Lakes\Project Files\Garvey\Garvey.isc
***        03/04/24
 *** AERMET - VERSION  16216 ***   ***
***        13:00:54

PAGE 123
 *** MODELOPTs:    RegDFAULT  CONC  ELEV  URBAN  ADJ_U*

                   * SOURCE EMISSION RATE SCALARS WHICH VARY DIURNALLY AND BY DAY
OF WEEK (HRDOW) *

 SOURCE ID = L0001899     ; SOURCE TYPE = VOLUME   :
  HOUR   SCALAR   HOUR   SCALAR   HOUR   SCALAR   HOUR   SCALAR   HOUR   SCALAR
HOUR   SCALAR   HOUR   SCALAR   HOUR   SCALAR
 - - - - - - - - - - - - - - - - - - - - - - - - - - - - - - - - - - - - - - - -
- - - - - - - - - - - - - - - - - - - - - - - - -
                                                DAY OF WEEK = WEEKDAY
    1  .0000E+00    2  .0000E+00    3  .0000E+00    4  .0000E+00    5  .0000E+00
6  .0000E+00    7  .1000E+01    8  .1000E+01
    9  .1000E+01   10  .1000E+01   11  .1000E+01   12  .1000E+01   13  .1000E+01
14  .1000E+01   15  .1000E+01   16  .1000E+01
   17  .0000E+00   18  .0000E+00   19  .0000E+00   20  .0000E+00   21  .0000E+00
22  .0000E+00   23  .0000E+00   24  .0000E+00
                                                DAY OF WEEK = SATURDAY
    1  .0000E+00    2  .0000E+00    3  .0000E+00    4  .0000E+00    5  .0000E+00
6  .0000E+00    7  .0000E+00    8  .0000E+00
    9  .0000E+00   10  .0000E+00   11  .0000E+00   12  .0000E+00   13  .0000E+00
14  .0000E+00   15  .0000E+00   16  .0000E+00
   17  .0000E+00   18  .0000E+00   19  .0000E+00   20  .0000E+00   21  .0000E+00
22  .0000E+00   23  .0000E+00   24  .0000E+00
                                                DAY OF WEEK = SUNDAY
    1  .0000E+00    2  .0000E+00    3  .0000E+00    4  .0000E+00    5  .0000E+00
6  .0000E+00    7  .0000E+00    8  .0000E+00
    9  .0000E+00   10  .0000E+00   11  .0000E+00   12  .0000E+00   13  .0000E+00
14  .0000E+00   15  .0000E+00   16  .0000E+00
   17  .0000E+00   18  .0000E+00   19  .0000E+00   20  .0000E+00   21  .0000E+00
22  .0000E+00   23  .0000E+00   24  .0000E+00
```

```
 *** AERMOD - VERSION 22112  ***   *** C:\Lakes\Project Files\Garvey\Garvey.isc
***        03/04/24
 *** AERMET - VERSION  16216 ***   ***
***        13:00:54

PAGE 124
 *** MODELOPTs:    RegDFAULT  CONC  ELEV  URBAN  ADJ_U*

                   * SOURCE EMISSION RATE SCALARS WHICH VARY DIURNALLY AND BY DAY
OF WEEK (HRDOW) *

 SOURCE ID = L0001900     ; SOURCE TYPE = VOLUME   :
  HOUR   SCALAR   HOUR   SCALAR   HOUR   SCALAR   HOUR   SCALAR   HOUR   SCALAR
HOUR   SCALAR   HOUR   SCALAR   HOUR   SCALAR
 - - - - - - - - - - - - - - - - - - - - - - - - - - - - - - - - - - - - - - - -
- - - - - - - - - - - - - - - - - - - - - - - - -
                                                DAY OF WEEK = WEEKDAY
    1  .0000E+00    2  .0000E+00    3  .0000E+00    4  .0000E+00    5  .0000E+00
6  .0000E+00    7  .1000E+01    8  .1000E+01
    9  .1000E+01   10  .1000E+01   11  .1000E+01   12  .1000E+01   13  .1000E+01
14  .1000E+01   15  .1000E+01   16  .1000E+01
   17  .0000E+00   18  .0000E+00   19  .0000E+00   20  .0000E+00   21  .0000E+00
22  .0000E+00   23  .0000E+00   24  .0000E+00
                                                DAY OF WEEK = SATURDAY
    1  .0000E+00    2  .0000E+00    3  .0000E+00    4  .0000E+00    5  .0000E+00
6  .0000E+00    7  .0000E+00    8  .0000E+00
    9  .0000E+00   10  .0000E+00   11  .0000E+00   12  .0000E+00   13  .0000E+00
14  .0000E+00   15  .0000E+00   16  .0000E+00
   17  .0000E+00   18  .0000E+00   19  .0000E+00   20  .0000E+00   21  .0000E+00
22  .0000E+00   23  .0000E+00   24  .0000E+00
                                                DAY OF WEEK = SUNDAY
    1  .0000E+00    2  .0000E+00    3  .0000E+00    4  .0000E+00    5  .0000E+00
6  .0000E+00    7  .0000E+00    8  .0000E+00
    9  .0000E+00   10  .0000E+00   11  .0000E+00   12  .0000E+00   13  .0000E+00
14  .0000E+00   15  .0000E+00   16  .0000E+00
   17  .0000E+00   18  .0000E+00   19  .0000E+00   20  .0000E+00   21  .0000E+00
22  .0000E+00   23  .0000E+00   24  .0000E+00
```

*** MODELOPTs: RegDFAULT CONC ELEV URBAN ADJ_U*

* SOURCE EMISSION RATE SCALARS WHICH VARY DIURNALLY AND BY DAY OF WEEK (HRDOW) *

SOURCE ID = L0001901 ; SOURCE TYPE = VOLUME :

HOUR	SCALAR	HOUR	SCALAR	HOUR	SCALAR	HOUR	SCALAR	HOUR	SCALAR	HOUR	SCALAR	HOUR	SCALAR	HOUR	SCALAR

DAY OF WEEK = WEEKDAY

1	.0000E+00	2	.0000E+00	3	.0000E+00	4	.0000E+00	5	.0000E+00	6	.0000E+00	7	.1000E+01	8	.1000E+01
9	.1000E+01	10	.1000E+01	11	.1000E+01	12	.1000E+01	13	.1000E+01	14	.1000E+01	15	.1000E+01	16	.1000E+01
17	.0000E+00	18	.0000E+00	19	.0000E+00	20	.0000E+00	21	.0000E+00	22	.0000E+00	23	.0000E+00	24	.0000E+00

DAY OF WEEK = SATURDAY

1	.0000E+00	2	.0000E+00	3	.0000E+00	4	.0000E+00	5	.0000E+00	6	.0000E+00	7	.0000E+00	8	.0000E+00
9	.0000E+00	10	.0000E+00	11	.0000E+00	12	.0000E+00	13	.0000E+00	14	.0000E+00	15	.0000E+00	16	.0000E+00
17	.0000E+00	18	.0000E+00	19	.0000E+00	20	.0000E+00	21	.0000E+00	22	.0000E+00	23	.0000E+00	24	.0000E+00

DAY OF WEEK = SUNDAY

1	.0000E+00	2	.0000E+00	3	.0000E+00	4	.0000E+00	5	.0000E+00	6	.0000E+00	7	.0000E+00	8	.0000E+00
9	.0000E+00	10	.0000E+00	11	.0000E+00	12	.0000E+00	13	.0000E+00	14	.0000E+00	15	.0000E+00	16	.0000E+00
17	.0000E+00	18	.0000E+00	19	.0000E+00	20	.0000E+00	21	.0000E+00	22	.0000E+00	23	.0000E+00	24	.0000E+00

*** MODELOPTs: RegDFAULT CONC ELEV URBAN ADJ_U*

* SOURCE EMISSION RATE SCALARS WHICH VARY DIURNALLY AND BY DAY OF WEEK (HRDOW) *

SOURCE ID = L0001902 ; SOURCE TYPE = VOLUME :

HOUR	SCALAR	HOUR	SCALAR	HOUR	SCALAR	HOUR	SCALAR	HOUR	SCALAR	HOUR	SCALAR	HOUR	SCALAR	HOUR	SCALAR

DAY OF WEEK = WEEKDAY

1	.0000E+00	2	.0000E+00	3	.0000E+00	4	.0000E+00	5	.0000E+00	6	.0000E+00	7	.1000E+01	8	.1000E+01
9	.1000E+01	10	.1000E+01	11	.1000E+01	12	.1000E+01	13	.1000E+01	14	.1000E+01	15	.1000E+01	16	.1000E+01
17	.0000E+00	18	.0000E+00	19	.0000E+00	20	.0000E+00	21	.0000E+00	22	.0000E+00	23	.0000E+00	24	.0000E+00

DAY OF WEEK = SATURDAY

1	.0000E+00	2	.0000E+00	3	.0000E+00	4	.0000E+00	5	.0000E+00	6	.0000E+00	7	.0000E+00	8	.0000E+00
9	.0000E+00	10	.0000E+00	11	.0000E+00	12	.0000E+00	13	.0000E+00	14	.0000E+00	15	.0000E+00	16	.0000E+00
17	.0000E+00	18	.0000E+00	19	.0000E+00	20	.0000E+00	21	.0000E+00	22	.0000E+00	23	.0000E+00	24	.0000E+00

DAY OF WEEK = SUNDAY

1	.0000E+00	2	.0000E+00	3	.0000E+00	4	.0000E+00	5	.0000E+00	6	.0000E+00	7	.0000E+00	8	.0000E+00
9	.0000E+00	10	.0000E+00	11	.0000E+00	12	.0000E+00	13	.0000E+00	14	.0000E+00	15	.0000E+00	16	.0000E+00
17	.0000E+00	18	.0000E+00	19	.0000E+00	20	.0000E+00	21	.0000E+00	22	.0000E+00	23	.0000E+00	24	.0000E+00

*** MODELOPTs: RegDFAULT CONC ELEV URBAN ADJ_U*

* SOURCE EMISSION RATE SCALARS WHICH VARY DIURNALLY AND BY DAY OF WEEK (HRDOW) *

SOURCE ID = L0001903 ; SOURCE TYPE = VOLUME :

HOUR	SCALAR	HOUR	SCALAR	HOUR	SCALAR	HOUR	SCALAR	HOUR	SCALAR	HOUR	SCALAR	HOUR	SCALAR	HOUR	SCALAR

DAY OF WEEK = WEEKDAY

1	.0000E+00	2	.0000E+00	3	.0000E+00	4	.0000E+00	5	.0000E+00	6	.0000E+00	7	.1000E+01	8	.1000E+01
9	.1000E+01	10	.1000E+01	11	.1000E+01	12	.1000E+01	13	.1000E+01	14	.1000E+01	15	.1000E+01	16	.1000E+01
17	.0000E+00	18	.0000E+00	19	.0000E+00	20	.0000E+00	21	.0000E+00	22	.0000E+00	23	.0000E+00	24	.0000E+00

DAY OF WEEK = SATURDAY

1	.0000E+00	2	.0000E+00	3	.0000E+00	4	.0000E+00	5	.0000E+00	6	.0000E+00	7	.0000E+00	8	.0000E+00
9	.0000E+00	10	.0000E+00	11	.0000E+00	12	.0000E+00	13	.0000E+00	14	.0000E+00	15	.0000E+00	16	.0000E+00
17	.0000E+00	18	.0000E+00	19	.0000E+00	20	.0000E+00	21	.0000E+00	22	.0000E+00	23	.0000E+00	24	.0000E+00

DAY OF WEEK = SUNDAY

1	.0000E+00	2	.0000E+00	3	.0000E+00	4	.0000E+00	5	.0000E+00	6	.0000E+00	7	.0000E+00	8	.0000E+00
9	.0000E+00	10	.0000E+00	11	.0000E+00	12	.0000E+00	13	.0000E+00	14	.0000E+00	15	.0000E+00	16	.0000E+00
17	.0000E+00	18	.0000E+00	19	.0000E+00	20	.0000E+00	21	.0000E+00	22	.0000E+00	23	.0000E+00	24	.0000E+00

```
 *** AERMOD - VERSION 22112  ***   *** C:\Lakes\Project Files\Garvey\Garvey.isc
***        03/04/24
 *** AERMET - VERSION  16216 ***   ***
***        13:00:54

PAGE 128
 *** MODELOPTs:    RegDFAULT  CONC  ELEV  URBAN  ADJ_U*

                   * SOURCE EMISSION RATE SCALARS WHICH VARY DIURNALLY AND BY DAY
OF WEEK (HRDOW) *

 SOURCE ID = L0001904     ; SOURCE TYPE = VOLUME   :
  HOUR   SCALAR   HOUR   SCALAR   HOUR   SCALAR   HOUR   SCALAR   HOUR   SCALAR
HOUR   SCALAR   HOUR   SCALAR   HOUR   SCALAR
 - - - - - - - - - - - - - - - - - - - - - - - - - - - - - - - - - - - - - - - -
- - - - - - - - - - - - - - - - - - - - - - - - -
                                                DAY OF WEEK = WEEKDAY
    1  .0000E+00    2  .0000E+00    3  .0000E+00    4  .0000E+00    5  .0000E+00
6  .0000E+00    7  .1000E+01    8  .1000E+01
    9  .1000E+01   10  .1000E+01   11  .1000E+01   12  .1000E+01   13  .1000E+01
14  .1000E+01   15  .1000E+01   16  .1000E+01
   17  .0000E+00   18  .0000E+00   19  .0000E+00   20  .0000E+00   21  .0000E+00
22  .0000E+00   23  .0000E+00   24  .0000E+00
                                                DAY OF WEEK = SATURDAY
    1  .0000E+00    2  .0000E+00    3  .0000E+00    4  .0000E+00    5  .0000E+00
6  .0000E+00    7  .0000E+00    8  .0000E+00
    9  .0000E+00   10  .0000E+00   11  .0000E+00   12  .0000E+00   13  .0000E+00
14  .0000E+00   15  .0000E+00   16  .0000E+00
   17  .0000E+00   18  .0000E+00   19  .0000E+00   20  .0000E+00   21  .0000E+00
22  .0000E+00   23  .0000E+00   24  .0000E+00
                                                DAY OF WEEK = SUNDAY
    1  .0000E+00    2  .0000E+00    3  .0000E+00    4  .0000E+00    5  .0000E+00
6  .0000E+00    7  .0000E+00    8  .0000E+00
    9  .0000E+00   10  .0000E+00   11  .0000E+00   12  .0000E+00   13  .0000E+00
14  .0000E+00   15  .0000E+00   16  .0000E+00
   17  .0000E+00   18  .0000E+00   19  .0000E+00   20  .0000E+00   21  .0000E+00
22  .0000E+00   23  .0000E+00   24  .0000E+00
```

```
 *** AERMOD - VERSION 22112  ***   *** C:\Lakes\Project Files\Garvey\Garvey.isc
***        03/04/24
 *** AERMET - VERSION  16216 ***   ***
***        13:00:54

PAGE 129
 *** MODELOPTs:    RegDFAULT  CONC  ELEV  URBAN  ADJ_U*

                   * SOURCE EMISSION RATE SCALARS WHICH VARY DIURNALLY AND BY DAY
OF WEEK (HRDOW) *

 SOURCE ID = L0001905     ; SOURCE TYPE = VOLUME   :
  HOUR   SCALAR   HOUR   SCALAR   HOUR   SCALAR   HOUR   SCALAR   HOUR   SCALAR
HOUR   SCALAR   HOUR   SCALAR   HOUR   SCALAR
 - - - - - - - - - - - - - - - - - - - - - - - - - - - - - - - - - - - - - - - -
- - - - - - - - - - - - - - - - - - - - - - - - - -
                                                DAY OF WEEK = WEEKDAY
    1  .0000E+00    2  .0000E+00    3  .0000E+00    4  .0000E+00    5  .0000E+00
6  .0000E+00    7  .1000E+01    8  .1000E+01
    9  .1000E+01   10  .1000E+01   11  .1000E+01   12  .1000E+01   13  .1000E+01
14  .1000E+01   15  .1000E+01   16  .1000E+01
   17  .0000E+00   18  .0000E+00   19  .0000E+00   20  .0000E+00   21  .0000E+00
22  .0000E+00   23  .0000E+00   24  .0000E+00
                                                DAY OF WEEK = SATURDAY
    1  .0000E+00    2  .0000E+00    3  .0000E+00    4  .0000E+00    5  .0000E+00
6  .0000E+00    7  .0000E+00    8  .0000E+00
    9  .0000E+00   10  .0000E+00   11  .0000E+00   12  .0000E+00   13  .0000E+00
14  .0000E+00   15  .0000E+00   16  .0000E+00
   17  .0000E+00   18  .0000E+00   19  .0000E+00   20  .0000E+00   21  .0000E+00
22  .0000E+00   23  .0000E+00   24  .0000E+00
                                                DAY OF WEEK = SUNDAY
    1  .0000E+00    2  .0000E+00    3  .0000E+00    4  .0000E+00    5  .0000E+00
6  .0000E+00    7  .0000E+00    8  .0000E+00
    9  .0000E+00   10  .0000E+00   11  .0000E+00   12  .0000E+00   13  .0000E+00
14  .0000E+00   15  .0000E+00   16  .0000E+00
   17  .0000E+00   18  .0000E+00   19  .0000E+00   20  .0000E+00   21  .0000E+00
22  .0000E+00   23  .0000E+00   24  .0000E+00
```

```
 *** AERMOD - VERSION 22112  ***   *** C:\Lakes\Project Files\Garvey\Garvey.isc
***        03/04/24
 *** AERMET - VERSION  16216 ***   ***
***        13:00:54

PAGE 130
 *** MODELOPTs:    RegDFAULT  CONC  ELEV  URBAN  ADJ_U*

                   * SOURCE EMISSION RATE SCALARS WHICH VARY DIURNALLY AND BY DAY
OF WEEK (HRDOW) *

 SOURCE ID = L0001906     ; SOURCE TYPE = VOLUME   :
  HOUR   SCALAR   HOUR   SCALAR   HOUR   SCALAR   HOUR   SCALAR   HOUR   SCALAR
HOUR   SCALAR   HOUR   SCALAR   HOUR   SCALAR
 - - - - - - - - - - - - - - - - - - - - - - - - - - - - - - - - - - - - - - - -
- - - - - - - - - - - - - - - - - - - - - - - - -
                                                DAY OF WEEK = WEEKDAY
    1  .0000E+00    2  .0000E+00    3  .0000E+00    4  .0000E+00    5  .0000E+00
6  .0000E+00    7  .1000E+01    8  .1000E+01
    9  .1000E+01   10  .1000E+01   11  .1000E+01   12  .1000E+01   13  .1000E+01
14  .1000E+01   15  .1000E+01   16  .1000E+01
   17  .0000E+00   18  .0000E+00   19  .0000E+00   20  .0000E+00   21  .0000E+00
22  .0000E+00   23  .0000E+00   24  .0000E+00
                                                DAY OF WEEK = SATURDAY
    1  .0000E+00    2  .0000E+00    3  .0000E+00    4  .0000E+00    5  .0000E+00
6  .0000E+00    7  .0000E+00    8  .0000E+00
    9  .0000E+00   10  .0000E+00   11  .0000E+00   12  .0000E+00   13  .0000E+00
14  .0000E+00   15  .0000E+00   16  .0000E+00
   17  .0000E+00   18  .0000E+00   19  .0000E+00   20  .0000E+00   21  .0000E+00
22  .0000E+00   23  .0000E+00   24  .0000E+00
                                                DAY OF WEEK = SUNDAY
    1  .0000E+00    2  .0000E+00    3  .0000E+00    4  .0000E+00    5  .0000E+00
6  .0000E+00    7  .0000E+00    8  .0000E+00
    9  .0000E+00   10  .0000E+00   11  .0000E+00   12  .0000E+00   13  .0000E+00
14  .0000E+00   15  .0000E+00   16  .0000E+00
   17  .0000E+00   18  .0000E+00   19  .0000E+00   20  .0000E+00   21  .0000E+00
22  .0000E+00   23  .0000E+00   24  .0000E+00
```

*** MODELOPTs: RegDFAULT CONC ELEV URBAN ADJ_U*

* SOURCE EMISSION RATE SCALARS WHICH VARY DIURNALLY AND BY DAY OF WEEK (HRDOW) *

SOURCE ID = L0001907 ; SOURCE TYPE = VOLUME :

HOUR	SCALAR	HOUR	SCALAR	HOUR	SCALAR	HOUR	SCALAR	HOUR	SCALAR	HOUR	SCALAR	HOUR	SCALAR	HOUR	SCALAR

DAY OF WEEK = WEEKDAY

1	.0000E+00	2	.0000E+00	3	.0000E+00	4	.0000E+00	5	.0000E+00	6	.0000E+00	7	.1000E+01	8	.1000E+01
9	.1000E+01	10	.1000E+01	11	.1000E+01	12	.1000E+01	13	.1000E+01	14	.1000E+01	15	.1000E+01	16	.1000E+01
17	.0000E+00	18	.0000E+00	19	.0000E+00	20	.0000E+00	21	.0000E+00	22	.0000E+00	23	.0000E+00	24	.0000E+00

DAY OF WEEK = SATURDAY

1	.0000E+00	2	.0000E+00	3	.0000E+00	4	.0000E+00	5	.0000E+00	6	.0000E+00	7	.0000E+00	8	.0000E+00
9	.0000E+00	10	.0000E+00	11	.0000E+00	12	.0000E+00	13	.0000E+00	14	.0000E+00	15	.0000E+00	16	.0000E+00
17	.0000E+00	18	.0000E+00	19	.0000E+00	20	.0000E+00	21	.0000E+00	22	.0000E+00	23	.0000E+00	24	.0000E+00

DAY OF WEEK = SUNDAY

1	.0000E+00	2	.0000E+00	3	.0000E+00	4	.0000E+00	5	.0000E+00	6	.0000E+00	7	.0000E+00	8	.0000E+00
9	.0000E+00	10	.0000E+00	11	.0000E+00	12	.0000E+00	13	.0000E+00	14	.0000E+00	15	.0000E+00	16	.0000E+00
17	.0000E+00	18	.0000E+00	19	.0000E+00	20	.0000E+00	21	.0000E+00	22	.0000E+00	23	.0000E+00	24	.0000E+00

*** MODELOPTs: RegDFAULT CONC ELEV URBAN ADJ_U*

* SOURCE EMISSION RATE SCALARS WHICH VARY DIURNALLY AND BY DAY OF WEEK (HRDOW) *

SOURCE ID = L0001908 ; SOURCE TYPE = VOLUME :

HOUR	SCALAR	HOUR	SCALAR	HOUR	SCALAR	HOUR	SCALAR	HOUR	SCALAR	HOUR	SCALAR	HOUR	SCALAR	HOUR	SCALAR

DAY OF WEEK = WEEKDAY

1	.0000E+00	2	.0000E+00	3	.0000E+00	4	.0000E+00	5	.0000E+00	6	.0000E+00	7	.1000E+01	8	.1000E+01
9	.1000E+01	10	.1000E+01	11	.1000E+01	12	.1000E+01	13	.1000E+01	14	.1000E+01	15	.1000E+01	16	.1000E+01
17	.0000E+00	18	.0000E+00	19	.0000E+00	20	.0000E+00	21	.0000E+00	22	.0000E+00	23	.0000E+00	24	.0000E+00

DAY OF WEEK = SATURDAY

1	.0000E+00	2	.0000E+00	3	.0000E+00	4	.0000E+00	5	.0000E+00	6	.0000E+00	7	.0000E+00	8	.0000E+00
9	.0000E+00	10	.0000E+00	11	.0000E+00	12	.0000E+00	13	.0000E+00	14	.0000E+00	15	.0000E+00	16	.0000E+00
17	.0000E+00	18	.0000E+00	19	.0000E+00	20	.0000E+00	21	.0000E+00	22	.0000E+00	23	.0000E+00	24	.0000E+00

DAY OF WEEK = SUNDAY

1	.0000E+00	2	.0000E+00	3	.0000E+00	4	.0000E+00	5	.0000E+00	6	.0000E+00	7	.0000E+00	8	.0000E+00
9	.0000E+00	10	.0000E+00	11	.0000E+00	12	.0000E+00	13	.0000E+00	14	.0000E+00	15	.0000E+00	16	.0000E+00
17	.0000E+00	18	.0000E+00	19	.0000E+00	20	.0000E+00	21	.0000E+00	22	.0000E+00	23	.0000E+00	24	.0000E+00

```
 *** AERMOD - VERSION 22112  ***   *** C:\Lakes\Project Files\Garvey\Garvey.isc
***        03/04/24
 *** AERMET - VERSION  16216 ***   ***
***        13:00:54

PAGE 133
 *** MODELOPTs:    RegDFAULT  CONC  ELEV  URBAN  ADJ_U*

                   * SOURCE EMISSION RATE SCALARS WHICH VARY DIURNALLY AND BY DAY
OF WEEK (HRDOW) *

 SOURCE ID = L0001909     ; SOURCE TYPE = VOLUME   :
  HOUR   SCALAR   HOUR   SCALAR   HOUR   SCALAR   HOUR   SCALAR   HOUR   SCALAR
HOUR   SCALAR   HOUR   SCALAR   HOUR   SCALAR
 - - - - - - - - - - - - - - - - - - - - - - - - - - - - - - - - - - - - - - - -
- - - - - - - - - - - - - - - - - - - - - - - - -
                                                DAY OF WEEK = WEEKDAY
    1  .0000E+00    2  .0000E+00    3  .0000E+00    4  .0000E+00    5  .0000E+00
6  .0000E+00    7  .1000E+01    8  .1000E+01
    9  .1000E+01   10  .1000E+01   11  .1000E+01   12  .1000E+01   13  .1000E+01
14  .1000E+01   15  .1000E+01   16  .1000E+01
   17  .0000E+00   18  .0000E+00   19  .0000E+00   20  .0000E+00   21  .0000E+00
22  .0000E+00   23  .0000E+00   24  .0000E+00
                                                DAY OF WEEK = SATURDAY
    1  .0000E+00    2  .0000E+00    3  .0000E+00    4  .0000E+00    5  .0000E+00
6  .0000E+00    7  .0000E+00    8  .0000E+00
    9  .0000E+00   10  .0000E+00   11  .0000E+00   12  .0000E+00   13  .0000E+00
14  .0000E+00   15  .0000E+00   16  .0000E+00
   17  .0000E+00   18  .0000E+00   19  .0000E+00   20  .0000E+00   21  .0000E+00
22  .0000E+00   23  .0000E+00   24  .0000E+00
                                                DAY OF WEEK = SUNDAY
    1  .0000E+00    2  .0000E+00    3  .0000E+00    4  .0000E+00    5  .0000E+00
6  .0000E+00    7  .0000E+00    8  .0000E+00
    9  .0000E+00   10  .0000E+00   11  .0000E+00   12  .0000E+00   13  .0000E+00
14  .0000E+00   15  .0000E+00   16  .0000E+00
   17  .0000E+00   18  .0000E+00   19  .0000E+00   20  .0000E+00   21  .0000E+00
22  .0000E+00   23  .0000E+00   24  .0000E+00
```

*** MODELOPTs: RegDFAULT CONC ELEV URBAN ADJ_U*

* SOURCE EMISSION RATE SCALARS WHICH VARY DIURNALLY AND BY DAY OF WEEK (HRDOW) *

SOURCE ID = L0001910 ; SOURCE TYPE = VOLUME :

HOUR	SCALAR	HOUR	SCALAR	HOUR	SCALAR	HOUR	SCALAR	HOUR	SCALAR	HOUR	SCALAR	HOUR	SCALAR	HOUR	SCALAR

DAY OF WEEK = WEEKDAY

1	.0000E+00	2	.0000E+00	3	.0000E+00	4	.0000E+00	5	.0000E+00	6	.0000E+00	7	.1000E+01	8	.1000E+01
9	.1000E+01	10	.1000E+01	11	.1000E+01	12	.1000E+01	13	.1000E+01	14	.1000E+01	15	.1000E+01	16	.1000E+01
17	.0000E+00	18	.0000E+00	19	.0000E+00	20	.0000E+00	21	.0000E+00	22	.0000E+00	23	.0000E+00	24	.0000E+00

DAY OF WEEK = SATURDAY

1	.0000E+00	2	.0000E+00	3	.0000E+00	4	.0000E+00	5	.0000E+00	6	.0000E+00	7	.0000E+00	8	.0000E+00
9	.0000E+00	10	.0000E+00	11	.0000E+00	12	.0000E+00	13	.0000E+00	14	.0000E+00	15	.0000E+00	16	.0000E+00
17	.0000E+00	18	.0000E+00	19	.0000E+00	20	.0000E+00	21	.0000E+00	22	.0000E+00	23	.0000E+00	24	.0000E+00

DAY OF WEEK = SUNDAY

1	.0000E+00	2	.0000E+00	3	.0000E+00	4	.0000E+00	5	.0000E+00	6	.0000E+00	7	.0000E+00	8	.0000E+00
9	.0000E+00	10	.0000E+00	11	.0000E+00	12	.0000E+00	13	.0000E+00	14	.0000E+00	15	.0000E+00	16	.0000E+00
17	.0000E+00	18	.0000E+00	19	.0000E+00	20	.0000E+00	21	.0000E+00	22	.0000E+00	23	.0000E+00	24	.0000E+00

*** MODELOPTs: RegDFAULT CONC ELEV URBAN ADJ_U*

* SOURCE EMISSION RATE SCALARS WHICH VARY DIURNALLY AND BY DAY OF WEEK (HRDOW) *

SOURCE ID = L0001911 ; SOURCE TYPE = VOLUME :

HOUR	SCALAR	HOUR	SCALAR	HOUR	SCALAR	HOUR	SCALAR	HOUR	SCALAR	HOUR	SCALAR	HOUR	SCALAR	HOUR	SCALAR

DAY OF WEEK = WEEKDAY

1	.0000E+00	2	.0000E+00	3	.0000E+00	4	.0000E+00	5	.0000E+00	6	.0000E+00	7	.1000E+01	8	.1000E+01
9	.1000E+01	10	.1000E+01	11	.1000E+01	12	.1000E+01	13	.1000E+01	14	.1000E+01	15	.1000E+01	16	.1000E+01
17	.0000E+00	18	.0000E+00	19	.0000E+00	20	.0000E+00	21	.0000E+00	22	.0000E+00	23	.0000E+00	24	.0000E+00

DAY OF WEEK = SATURDAY

1	.0000E+00	2	.0000E+00	3	.0000E+00	4	.0000E+00	5	.0000E+00	6	.0000E+00	7	.0000E+00	8	.0000E+00
9	.0000E+00	10	.0000E+00	11	.0000E+00	12	.0000E+00	13	.0000E+00	14	.0000E+00	15	.0000E+00	16	.0000E+00
17	.0000E+00	18	.0000E+00	19	.0000E+00	20	.0000E+00	21	.0000E+00	22	.0000E+00	23	.0000E+00	24	.0000E+00

DAY OF WEEK = SUNDAY

1	.0000E+00	2	.0000E+00	3	.0000E+00	4	.0000E+00	5	.0000E+00	6	.0000E+00	7	.0000E+00	8	.0000E+00
9	.0000E+00	10	.0000E+00	11	.0000E+00	12	.0000E+00	13	.0000E+00	14	.0000E+00	15	.0000E+00	16	.0000E+00
17	.0000E+00	18	.0000E+00	19	.0000E+00	20	.0000E+00	21	.0000E+00	22	.0000E+00	23	.0000E+00	24	.0000E+00

```
 *** AERMOD - VERSION 22112  ***   *** C:\Lakes\Project Files\Garvey\Garvey.isc
***        03/04/24
 *** AERMET - VERSION  16216 ***   ***
***        13:00:54

PAGE 136
 *** MODELOPTs:    RegDFAULT  CONC  ELEV  URBAN  ADJ_U*

                   * SOURCE EMISSION RATE SCALARS WHICH VARY DIURNALLY AND BY DAY
OF WEEK (HRDOW) *

 SOURCE ID = L0001912     ; SOURCE TYPE = VOLUME   :
  HOUR   SCALAR   HOUR   SCALAR   HOUR   SCALAR   HOUR   SCALAR   HOUR   SCALAR
HOUR   SCALAR   HOUR   SCALAR   HOUR   SCALAR
 - - - - - - - - - - - - - - - - - - - - - - - - - - - - - - - - - - - - - - - -
- - - - - - - - - - - - - - - - - - - - - - - - -
                                                DAY OF WEEK = WEEKDAY
    1  .0000E+00    2  .0000E+00    3  .0000E+00    4  .0000E+00    5  .0000E+00
6  .0000E+00    7  .1000E+01    8  .1000E+01
    9  .1000E+01   10  .1000E+01   11  .1000E+01   12  .1000E+01   13  .1000E+01
14  .1000E+01   15  .1000E+01   16  .1000E+01
   17  .0000E+00   18  .0000E+00   19  .0000E+00   20  .0000E+00   21  .0000E+00
22  .0000E+00   23  .0000E+00   24  .0000E+00
                                                DAY OF WEEK = SATURDAY
    1  .0000E+00    2  .0000E+00    3  .0000E+00    4  .0000E+00    5  .0000E+00
6  .0000E+00    7  .0000E+00    8  .0000E+00
    9  .0000E+00   10  .0000E+00   11  .0000E+00   12  .0000E+00   13  .0000E+00
14  .0000E+00   15  .0000E+00   16  .0000E+00
   17  .0000E+00   18  .0000E+00   19  .0000E+00   20  .0000E+00   21  .0000E+00
22  .0000E+00   23  .0000E+00   24  .0000E+00
                                                DAY OF WEEK = SUNDAY
    1  .0000E+00    2  .0000E+00    3  .0000E+00    4  .0000E+00    5  .0000E+00
6  .0000E+00    7  .0000E+00    8  .0000E+00
    9  .0000E+00   10  .0000E+00   11  .0000E+00   12  .0000E+00   13  .0000E+00
14  .0000E+00   15  .0000E+00   16  .0000E+00
   17  .0000E+00   18  .0000E+00   19  .0000E+00   20  .0000E+00   21  .0000E+00
22  .0000E+00   23  .0000E+00   24  .0000E+00
```

```
 *** AERMOD - VERSION 22112  ***   *** C:\Lakes\Project Files\Garvey\Garvey.isc
***        03/04/24
 *** AERMET - VERSION  16216 ***   ***
***        13:00:54

PAGE 137
 *** MODELOPTs:    RegDFAULT  CONC  ELEV  URBAN  ADJ_U*

                   * SOURCE EMISSION RATE SCALARS WHICH VARY DIURNALLY AND BY DAY
OF WEEK (HRDOW) *

 SOURCE ID = L0001913     ; SOURCE TYPE = VOLUME   :
  HOUR   SCALAR   HOUR   SCALAR   HOUR   SCALAR   HOUR   SCALAR   HOUR   SCALAR
HOUR   SCALAR   HOUR   SCALAR   HOUR   SCALAR
 - - - - - - - - - - - - - - - - - - - - - - - - - - - - - - - - - - - - - - - -
- - - - - - - - - - - - - - - - - - - - - - - - -
                                                DAY OF WEEK = WEEKDAY
    1  .0000E+00    2  .0000E+00    3  .0000E+00    4  .0000E+00    5  .0000E+00
6  .0000E+00    7  .1000E+01    8  .1000E+01
    9  .1000E+01   10  .1000E+01   11  .1000E+01   12  .1000E+01   13  .1000E+01
14  .1000E+01   15  .1000E+01   16  .1000E+01
   17  .0000E+00   18  .0000E+00   19  .0000E+00   20  .0000E+00   21  .0000E+00
22  .0000E+00   23  .0000E+00   24  .0000E+00
                                                DAY OF WEEK = SATURDAY
    1  .0000E+00    2  .0000E+00    3  .0000E+00    4  .0000E+00    5  .0000E+00
6  .0000E+00    7  .0000E+00    8  .0000E+00
    9  .0000E+00   10  .0000E+00   11  .0000E+00   12  .0000E+00   13  .0000E+00
14  .0000E+00   15  .0000E+00   16  .0000E+00
   17  .0000E+00   18  .0000E+00   19  .0000E+00   20  .0000E+00   21  .0000E+00
22  .0000E+00   23  .0000E+00   24  .0000E+00
                                                DAY OF WEEK = SUNDAY
    1  .0000E+00    2  .0000E+00    3  .0000E+00    4  .0000E+00    5  .0000E+00
6  .0000E+00    7  .0000E+00    8  .0000E+00
    9  .0000E+00   10  .0000E+00   11  .0000E+00   12  .0000E+00   13  .0000E+00
14  .0000E+00   15  .0000E+00   16  .0000E+00
   17  .0000E+00   18  .0000E+00   19  .0000E+00   20  .0000E+00   21  .0000E+00
22  .0000E+00   23  .0000E+00   24  .0000E+00
```

```
 *** AERMOD - VERSION 22112  ***   *** C:\Lakes\Project Files\Garvey\Garvey.isc
***        03/04/24
 *** AERMET - VERSION  16216 ***   ***
***        13:00:54

PAGE 138
 *** MODELOPTs:    RegDFAULT  CONC  ELEV  URBAN  ADJ_U*

                   * SOURCE EMISSION RATE SCALARS WHICH VARY DIURNALLY AND BY DAY
OF WEEK (HRDOW) *

 SOURCE ID = L0001914     ; SOURCE TYPE = VOLUME   :
  HOUR   SCALAR   HOUR   SCALAR   HOUR   SCALAR   HOUR   SCALAR   HOUR   SCALAR
HOUR   SCALAR   HOUR   SCALAR   HOUR   SCALAR
 - - - - - - - - - - - - - - - - - - - - - - - - - - - - - - - - - - - - - - - -
- - - - - - - - - - - - - - - - - - - - - - - - -
                                                DAY OF WEEK = WEEKDAY
    1  .0000E+00    2  .0000E+00    3  .0000E+00    4  .0000E+00    5  .0000E+00
6  .0000E+00    7  .1000E+01    8  .1000E+01
    9  .1000E+01   10  .1000E+01   11  .1000E+01   12  .1000E+01   13  .1000E+01
14  .1000E+01   15  .1000E+01   16  .1000E+01
   17  .0000E+00   18  .0000E+00   19  .0000E+00   20  .0000E+00   21  .0000E+00
22  .0000E+00   23  .0000E+00   24  .0000E+00
                                                DAY OF WEEK = SATURDAY
    1  .0000E+00    2  .0000E+00    3  .0000E+00    4  .0000E+00    5  .0000E+00
6  .0000E+00    7  .0000E+00    8  .0000E+00
    9  .0000E+00   10  .0000E+00   11  .0000E+00   12  .0000E+00   13  .0000E+00
14  .0000E+00   15  .0000E+00   16  .0000E+00
   17  .0000E+00   18  .0000E+00   19  .0000E+00   20  .0000E+00   21  .0000E+00
22  .0000E+00   23  .0000E+00   24  .0000E+00
                                                DAY OF WEEK = SUNDAY
    1  .0000E+00    2  .0000E+00    3  .0000E+00    4  .0000E+00    5  .0000E+00
6  .0000E+00    7  .0000E+00    8  .0000E+00
    9  .0000E+00   10  .0000E+00   11  .0000E+00   12  .0000E+00   13  .0000E+00
14  .0000E+00   15  .0000E+00   16  .0000E+00
   17  .0000E+00   18  .0000E+00   19  .0000E+00   20  .0000E+00   21  .0000E+00
22  .0000E+00   23  .0000E+00   24  .0000E+00
```

*** MODELOPTs: RegDFAULT CONC ELEV URBAN ADJ_U*

* SOURCE EMISSION RATE SCALARS WHICH VARY DIURNALLY AND BY DAY OF WEEK (HRDOW) *

SOURCE ID = L0001915 ; SOURCE TYPE = VOLUME :

HOUR	SCALAR	HOUR	SCALAR	HOUR	SCALAR	HOUR	SCALAR	HOUR	SCALAR	HOUR	SCALAR	HOUR	SCALAR	HOUR	SCALAR

DAY OF WEEK = WEEKDAY

1	.0000E+00	2	.0000E+00	3	.0000E+00	4	.0000E+00	5	.0000E+00	6	.0000E+00	7	.1000E+01	8	.1000E+01
9	.1000E+01	10	.1000E+01	11	.1000E+01	12	.1000E+01	13	.1000E+01	14	.1000E+01	15	.1000E+01	16	.1000E+01
17	.0000E+00	18	.0000E+00	19	.0000E+00	20	.0000E+00	21	.0000E+00	22	.0000E+00	23	.0000E+00	24	.0000E+00

DAY OF WEEK = SATURDAY

1	.0000E+00	2	.0000E+00	3	.0000E+00	4	.0000E+00	5	.0000E+00	6	.0000E+00	7	.0000E+00	8	.0000E+00
9	.0000E+00	10	.0000E+00	11	.0000E+00	12	.0000E+00	13	.0000E+00	14	.0000E+00	15	.0000E+00	16	.0000E+00
17	.0000E+00	18	.0000E+00	19	.0000E+00	20	.0000E+00	21	.0000E+00	22	.0000E+00	23	.0000E+00	24	.0000E+00

DAY OF WEEK = SUNDAY

1	.0000E+00	2	.0000E+00	3	.0000E+00	4	.0000E+00	5	.0000E+00	6	.0000E+00	7	.0000E+00	8	.0000E+00
9	.0000E+00	10	.0000E+00	11	.0000E+00	12	.0000E+00	13	.0000E+00	14	.0000E+00	15	.0000E+00	16	.0000E+00
17	.0000E+00	18	.0000E+00	19	.0000E+00	20	.0000E+00	21	.0000E+00	22	.0000E+00	23	.0000E+00	24	.0000E+00

```
 *** AERMOD - VERSION 22112  ***   *** C:\Lakes\Project Files\Garvey\Garvey.isc
***        03/04/24
 *** AERMET - VERSION  16216 ***   ***
***        13:00:54

PAGE 140
 *** MODELOPTs:    RegDFAULT  CONC  ELEV  URBAN  ADJ_U*

                   * SOURCE EMISSION RATE SCALARS WHICH VARY DIURNALLY AND BY DAY
OF WEEK (HRDOW) *

 SOURCE ID = L0001916     ; SOURCE TYPE = VOLUME   :
  HOUR   SCALAR   HOUR   SCALAR   HOUR   SCALAR   HOUR   SCALAR   HOUR   SCALAR
HOUR   SCALAR   HOUR   SCALAR   HOUR   SCALAR
 - - - - - - - - - - - - - - - - - - - - - - - - - - - - - - - - - - - - - - - -
- - - - - - - - - - - - - - - - - - - - - - - - -
                                                DAY OF WEEK = WEEKDAY
    1  .0000E+00    2  .0000E+00    3  .0000E+00    4  .0000E+00    5  .0000E+00
6  .0000E+00    7  .1000E+01    8  .1000E+01
    9  .1000E+01   10  .1000E+01   11  .1000E+01   12  .1000E+01   13  .1000E+01
14  .1000E+01   15  .1000E+01   16  .1000E+01
   17  .0000E+00   18  .0000E+00   19  .0000E+00   20  .0000E+00   21  .0000E+00
22  .0000E+00   23  .0000E+00   24  .0000E+00
                                                DAY OF WEEK = SATURDAY
    1  .0000E+00    2  .0000E+00    3  .0000E+00    4  .0000E+00    5  .0000E+00
6  .0000E+00    7  .0000E+00    8  .0000E+00
    9  .0000E+00   10  .0000E+00   11  .0000E+00   12  .0000E+00   13  .0000E+00
14  .0000E+00   15  .0000E+00   16  .0000E+00
   17  .0000E+00   18  .0000E+00   19  .0000E+00   20  .0000E+00   21  .0000E+00
22  .0000E+00   23  .0000E+00   24  .0000E+00
                                                DAY OF WEEK = SUNDAY
    1  .0000E+00    2  .0000E+00    3  .0000E+00    4  .0000E+00    5  .0000E+00
6  .0000E+00    7  .0000E+00    8  .0000E+00
    9  .0000E+00   10  .0000E+00   11  .0000E+00   12  .0000E+00   13  .0000E+00
14  .0000E+00   15  .0000E+00   16  .0000E+00
   17  .0000E+00   18  .0000E+00   19  .0000E+00   20  .0000E+00   21  .0000E+00
22  .0000E+00   23  .0000E+00   24  .0000E+00
```

```
 *** AERMOD - VERSION 22112  ***   *** C:\Lakes\Project Files\Garvey\Garvey.isc
***        03/04/24
 *** AERMET - VERSION  16216 ***   ***
***        13:00:54

PAGE 141
 *** MODELOPTs:    RegDFAULT  CONC  ELEV  URBAN  ADJ_U*

                   * SOURCE EMISSION RATE SCALARS WHICH VARY DIURNALLY AND BY DAY
OF WEEK (HRDOW) *

 SOURCE ID = L0001917     ; SOURCE TYPE = VOLUME   :
  HOUR   SCALAR   HOUR   SCALAR   HOUR   SCALAR   HOUR   SCALAR   HOUR   SCALAR
HOUR   SCALAR   HOUR   SCALAR   HOUR   SCALAR
 - - - - - - - - - - - - - - - - - - - - - - - - - - - - - - - - - - - - - - - -
- - - - - - - - - - - - - - - - - - - - - - - - -
                                                DAY OF WEEK = WEEKDAY
    1  .0000E+00    2  .0000E+00    3  .0000E+00    4  .0000E+00    5  .0000E+00
6  .0000E+00    7  .1000E+01    8  .1000E+01
    9  .1000E+01   10  .1000E+01   11  .1000E+01   12  .1000E+01   13  .1000E+01
14  .1000E+01   15  .1000E+01   16  .1000E+01
   17  .0000E+00   18  .0000E+00   19  .0000E+00   20  .0000E+00   21  .0000E+00
22  .0000E+00   23  .0000E+00   24  .0000E+00
                                                DAY OF WEEK = SATURDAY
    1  .0000E+00    2  .0000E+00    3  .0000E+00    4  .0000E+00    5  .0000E+00
6  .0000E+00    7  .0000E+00    8  .0000E+00
    9  .0000E+00   10  .0000E+00   11  .0000E+00   12  .0000E+00   13  .0000E+00
14  .0000E+00   15  .0000E+00   16  .0000E+00
   17  .0000E+00   18  .0000E+00   19  .0000E+00   20  .0000E+00   21  .0000E+00
22  .0000E+00   23  .0000E+00   24  .0000E+00
                                                DAY OF WEEK = SUNDAY
    1  .0000E+00    2  .0000E+00    3  .0000E+00    4  .0000E+00    5  .0000E+00
6  .0000E+00    7  .0000E+00    8  .0000E+00
    9  .0000E+00   10  .0000E+00   11  .0000E+00   12  .0000E+00   13  .0000E+00
14  .0000E+00   15  .0000E+00   16  .0000E+00
   17  .0000E+00   18  .0000E+00   19  .0000E+00   20  .0000E+00   21  .0000E+00
22  .0000E+00   23  .0000E+00   24  .0000E+00
```

```
 *** AERMOD - VERSION 22112  ***   *** C:\Lakes\Project Files\Garvey\Garvey.isc
***        03/04/24
 *** AERMET - VERSION  16216 ***   ***
***        13:00:54

PAGE 142
 *** MODELOPTs:    RegDFAULT  CONC  ELEV  URBAN  ADJ_U*

                   * SOURCE EMISSION RATE SCALARS WHICH VARY DIURNALLY AND BY DAY
OF WEEK (HRDOW) *

 SOURCE ID = L0001918     ; SOURCE TYPE = VOLUME   :
  HOUR   SCALAR   HOUR   SCALAR   HOUR   SCALAR   HOUR   SCALAR   HOUR   SCALAR
HOUR   SCALAR   HOUR   SCALAR   HOUR   SCALAR
 - - - - - - - - - - - - - - - - - - - - - - - - - - - - - - - - - - - - - - - -
- - - - - - - - - - - - - - - - - - - - - - - - -
                                                DAY OF WEEK = WEEKDAY
    1  .0000E+00    2  .0000E+00    3  .0000E+00    4  .0000E+00    5  .0000E+00
6  .0000E+00    7  .1000E+01    8  .1000E+01
    9  .1000E+01   10  .1000E+01   11  .1000E+01   12  .1000E+01   13  .1000E+01
14  .1000E+01   15  .1000E+01   16  .1000E+01
   17  .0000E+00   18  .0000E+00   19  .0000E+00   20  .0000E+00   21  .0000E+00
22  .0000E+00   23  .0000E+00   24  .0000E+00
                                                DAY OF WEEK = SATURDAY
    1  .0000E+00    2  .0000E+00    3  .0000E+00    4  .0000E+00    5  .0000E+00
6  .0000E+00    7  .0000E+00    8  .0000E+00
    9  .0000E+00   10  .0000E+00   11  .0000E+00   12  .0000E+00   13  .0000E+00
14  .0000E+00   15  .0000E+00   16  .0000E+00
   17  .0000E+00   18  .0000E+00   19  .0000E+00   20  .0000E+00   21  .0000E+00
22  .0000E+00   23  .0000E+00   24  .0000E+00
                                                DAY OF WEEK = SUNDAY
    1  .0000E+00    2  .0000E+00    3  .0000E+00    4  .0000E+00    5  .0000E+00
6  .0000E+00    7  .0000E+00    8  .0000E+00
    9  .0000E+00   10  .0000E+00   11  .0000E+00   12  .0000E+00   13  .0000E+00
14  .0000E+00   15  .0000E+00   16  .0000E+00
   17  .0000E+00   18  .0000E+00   19  .0000E+00   20  .0000E+00   21  .0000E+00
22  .0000E+00   23  .0000E+00   24  .0000E+00
```

```
 *** AERMOD - VERSION 22112  ***   *** C:\Lakes\Project Files\Garvey\Garvey.isc
***        03/04/24
 *** AERMET - VERSION  16216 ***   ***
***        13:00:54

PAGE 143
 *** MODELOPTs:    RegDFAULT  CONC  ELEV  URBAN  ADJ_U*

                   * SOURCE EMISSION RATE SCALARS WHICH VARY DIURNALLY AND BY DAY
OF WEEK (HRDOW) *

 SOURCE ID = L0001919     ; SOURCE TYPE = VOLUME   :
  HOUR   SCALAR   HOUR   SCALAR   HOUR   SCALAR   HOUR   SCALAR   HOUR   SCALAR
HOUR   SCALAR   HOUR   SCALAR   HOUR   SCALAR
 - - - - - - - - - - - - - - - - - - - - - - - - - - - - - - - - - - - - - - - -
- - - - - - - - - - - - - - - - - - - - - - - - -
                                                DAY OF WEEK = WEEKDAY
    1  .0000E+00    2  .0000E+00    3  .0000E+00    4  .0000E+00    5  .0000E+00
6  .0000E+00    7  .1000E+01    8  .1000E+01
    9  .1000E+01   10  .1000E+01   11  .1000E+01   12  .1000E+01   13  .1000E+01
14  .1000E+01   15  .1000E+01   16  .1000E+01
   17  .0000E+00   18  .0000E+00   19  .0000E+00   20  .0000E+00   21  .0000E+00
22  .0000E+00   23  .0000E+00   24  .0000E+00
                                                DAY OF WEEK = SATURDAY
    1  .0000E+00    2  .0000E+00    3  .0000E+00    4  .0000E+00    5  .0000E+00
6  .0000E+00    7  .0000E+00    8  .0000E+00
    9  .0000E+00   10  .0000E+00   11  .0000E+00   12  .0000E+00   13  .0000E+00
14  .0000E+00   15  .0000E+00   16  .0000E+00
   17  .0000E+00   18  .0000E+00   19  .0000E+00   20  .0000E+00   21  .0000E+00
22  .0000E+00   23  .0000E+00   24  .0000E+00
                                                DAY OF WEEK = SUNDAY
    1  .0000E+00    2  .0000E+00    3  .0000E+00    4  .0000E+00    5  .0000E+00
6  .0000E+00    7  .0000E+00    8  .0000E+00
    9  .0000E+00   10  .0000E+00   11  .0000E+00   12  .0000E+00   13  .0000E+00
14  .0000E+00   15  .0000E+00   16  .0000E+00
   17  .0000E+00   18  .0000E+00   19  .0000E+00   20  .0000E+00   21  .0000E+00
22  .0000E+00   23  .0000E+00   24  .0000E+00
```

```
 *** AERMOD - VERSION 22112  ***   *** C:\Lakes\Project Files\Garvey\Garvey.isc
***        03/04/24
 *** AERMET - VERSION  16216 ***   ***
***        13:00:54

PAGE 144
 *** MODELOPTs:    RegDFAULT  CONC  ELEV  URBAN  ADJ_U*

                   * SOURCE EMISSION RATE SCALARS WHICH VARY DIURNALLY AND BY DAY
OF WEEK (HRDOW) *

 SOURCE ID = L0001920     ; SOURCE TYPE = VOLUME   :
  HOUR   SCALAR   HOUR   SCALAR   HOUR   SCALAR   HOUR   SCALAR   HOUR   SCALAR
HOUR   SCALAR   HOUR   SCALAR   HOUR   SCALAR
 - - - - - - - - - - - - - - - - - - - - - - - - - - - - - - - - - - - - - - - -
- - - - - - - - - - - - - - - - - - - - - - - - -
                                                DAY OF WEEK = WEEKDAY
    1  .0000E+00    2  .0000E+00    3  .0000E+00    4  .0000E+00    5  .0000E+00
6  .0000E+00    7  .1000E+01    8  .1000E+01
    9  .1000E+01   10  .1000E+01   11  .1000E+01   12  .1000E+01   13  .1000E+01
14  .1000E+01   15  .1000E+01   16  .1000E+01
   17  .0000E+00   18  .0000E+00   19  .0000E+00   20  .0000E+00   21  .0000E+00
22  .0000E+00   23  .0000E+00   24  .0000E+00
                                                DAY OF WEEK = SATURDAY
    1  .0000E+00    2  .0000E+00    3  .0000E+00    4  .0000E+00    5  .0000E+00
6  .0000E+00    7  .0000E+00    8  .0000E+00
    9  .0000E+00   10  .0000E+00   11  .0000E+00   12  .0000E+00   13  .0000E+00
14  .0000E+00   15  .0000E+00   16  .0000E+00
   17  .0000E+00   18  .0000E+00   19  .0000E+00   20  .0000E+00   21  .0000E+00
22  .0000E+00   23  .0000E+00   24  .0000E+00
                                                DAY OF WEEK = SUNDAY
    1  .0000E+00    2  .0000E+00    3  .0000E+00    4  .0000E+00    5  .0000E+00
6  .0000E+00    7  .0000E+00    8  .0000E+00
    9  .0000E+00   10  .0000E+00   11  .0000E+00   12  .0000E+00   13  .0000E+00
14  .0000E+00   15  .0000E+00   16  .0000E+00
   17  .0000E+00   18  .0000E+00   19  .0000E+00   20  .0000E+00   21  .0000E+00
22  .0000E+00   23  .0000E+00   24  .0000E+00
```

```
 *** AERMOD - VERSION 22112  ***   *** C:\Lakes\Project Files\Garvey\Garvey.isc
***        03/04/24
 *** AERMET - VERSION  16216 ***   ***
***        13:00:54

PAGE 145
 *** MODELOPTs:    RegDFAULT  CONC  ELEV  URBAN  ADJ_U*

                   * SOURCE EMISSION RATE SCALARS WHICH VARY DIURNALLY AND BY DAY
OF WEEK (HRDOW) *

 SOURCE ID = L0001921     ; SOURCE TYPE = VOLUME   :
  HOUR   SCALAR   HOUR   SCALAR   HOUR   SCALAR   HOUR   SCALAR   HOUR   SCALAR
HOUR   SCALAR   HOUR   SCALAR   HOUR   SCALAR
 - - - - - - - - - - - - - - - - - - - - - - - - - - - - - - - - - - - - - - - -
- - - - - - - - - - - - - - - - - - - - - - - - -
                                                DAY OF WEEK = WEEKDAY
    1  .0000E+00    2  .0000E+00    3  .0000E+00    4  .0000E+00    5  .0000E+00
6  .0000E+00    7  .1000E+01    8  .1000E+01
    9  .1000E+01   10  .1000E+01   11  .1000E+01   12  .1000E+01   13  .1000E+01
14  .1000E+01   15  .1000E+01   16  .1000E+01
   17  .0000E+00   18  .0000E+00   19  .0000E+00   20  .0000E+00   21  .0000E+00
22  .0000E+00   23  .0000E+00   24  .0000E+00
                                                DAY OF WEEK = SATURDAY
    1  .0000E+00    2  .0000E+00    3  .0000E+00    4  .0000E+00    5  .0000E+00
6  .0000E+00    7  .0000E+00    8  .0000E+00
    9  .0000E+00   10  .0000E+00   11  .0000E+00   12  .0000E+00   13  .0000E+00
14  .0000E+00   15  .0000E+00   16  .0000E+00
   17  .0000E+00   18  .0000E+00   19  .0000E+00   20  .0000E+00   21  .0000E+00
22  .0000E+00   23  .0000E+00   24  .0000E+00
                                                DAY OF WEEK = SUNDAY
    1  .0000E+00    2  .0000E+00    3  .0000E+00    4  .0000E+00    5  .0000E+00
6  .0000E+00    7  .0000E+00    8  .0000E+00
    9  .0000E+00   10  .0000E+00   11  .0000E+00   12  .0000E+00   13  .0000E+00
14  .0000E+00   15  .0000E+00   16  .0000E+00
   17  .0000E+00   18  .0000E+00   19  .0000E+00   20  .0000E+00   21  .0000E+00
22  .0000E+00   23  .0000E+00   24  .0000E+00
```

*** MODELOPTs: RegDFAULT CONC ELEV URBAN ADJ_U*

* SOURCE EMISSION RATE SCALARS WHICH VARY DIURNALLY AND BY DAY OF WEEK (HRDOW) *

SOURCE ID = L0001922 ; SOURCE TYPE = VOLUME :

HOUR	SCALAR	HOUR	SCALAR	HOUR	SCALAR	HOUR	SCALAR	HOUR	SCALAR	HOUR	SCALAR	HOUR	SCALAR	HOUR	SCALAR

DAY OF WEEK = WEEKDAY

1	.0000E+00	2	.0000E+00	3	.0000E+00	4	.0000E+00	5	.0000E+00	6	.0000E+00	7	.1000E+01	8	.1000E+01
9	.1000E+01	10	.1000E+01	11	.1000E+01	12	.1000E+01	13	.1000E+01	14	.1000E+01	15	.1000E+01	16	.1000E+01
17	.0000E+00	18	.0000E+00	19	.0000E+00	20	.0000E+00	21	.0000E+00	22	.0000E+00	23	.0000E+00	24	.0000E+00

DAY OF WEEK = SATURDAY

1	.0000E+00	2	.0000E+00	3	.0000E+00	4	.0000E+00	5	.0000E+00	6	.0000E+00	7	.0000E+00	8	.0000E+00
9	.0000E+00	10	.0000E+00	11	.0000E+00	12	.0000E+00	13	.0000E+00	14	.0000E+00	15	.0000E+00	16	.0000E+00
17	.0000E+00	18	.0000E+00	19	.0000E+00	20	.0000E+00	21	.0000E+00	22	.0000E+00	23	.0000E+00	24	.0000E+00

DAY OF WEEK = SUNDAY

1	.0000E+00	2	.0000E+00	3	.0000E+00	4	.0000E+00	5	.0000E+00	6	.0000E+00	7	.0000E+00	8	.0000E+00
9	.0000E+00	10	.0000E+00	11	.0000E+00	12	.0000E+00	13	.0000E+00	14	.0000E+00	15	.0000E+00	16	.0000E+00
17	.0000E+00	18	.0000E+00	19	.0000E+00	20	.0000E+00	21	.0000E+00	22	.0000E+00	23	.0000E+00	24	.0000E+00

```
 *** AERMOD - VERSION 22112  ***   *** C:\Lakes\Project Files\Garvey\Garvey.isc
***        03/04/24
 *** AERMET - VERSION  16216 ***   ***
***        13:00:54

PAGE 147
 *** MODELOPTs:    RegDFAULT  CONC  ELEV  URBAN  ADJ_U*

                   * SOURCE EMISSION RATE SCALARS WHICH VARY DIURNALLY AND BY DAY
OF WEEK (HRDOW) *

 SOURCE ID = L0001923     ; SOURCE TYPE = VOLUME   :
  HOUR   SCALAR   HOUR   SCALAR   HOUR   SCALAR   HOUR   SCALAR   HOUR   SCALAR
HOUR   SCALAR   HOUR   SCALAR   HOUR   SCALAR
 - - - - - - - - - - - - - - - - - - - - - - - - - - - - - - - - - - - - - - - -
- - - - - - - - - - - - - - - - - - - - - - - - -
                                                DAY OF WEEK = WEEKDAY
    1  .0000E+00    2  .0000E+00    3  .0000E+00    4  .0000E+00    5  .0000E+00
6  .0000E+00    7  .1000E+01    8  .1000E+01
    9  .1000E+01   10  .1000E+01   11  .1000E+01   12  .1000E+01   13  .1000E+01
14  .1000E+01   15  .1000E+01   16  .1000E+01
   17  .0000E+00   18  .0000E+00   19  .0000E+00   20  .0000E+00   21  .0000E+00
22  .0000E+00   23  .0000E+00   24  .0000E+00
                                                DAY OF WEEK = SATURDAY
    1  .0000E+00    2  .0000E+00    3  .0000E+00    4  .0000E+00    5  .0000E+00
6  .0000E+00    7  .0000E+00    8  .0000E+00
    9  .0000E+00   10  .0000E+00   11  .0000E+00   12  .0000E+00   13  .0000E+00
14  .0000E+00   15  .0000E+00   16  .0000E+00
   17  .0000E+00   18  .0000E+00   19  .0000E+00   20  .0000E+00   21  .0000E+00
22  .0000E+00   23  .0000E+00   24  .0000E+00
                                                DAY OF WEEK = SUNDAY
    1  .0000E+00    2  .0000E+00    3  .0000E+00    4  .0000E+00    5  .0000E+00
6  .0000E+00    7  .0000E+00    8  .0000E+00
    9  .0000E+00   10  .0000E+00   11  .0000E+00   12  .0000E+00   13  .0000E+00
14  .0000E+00   15  .0000E+00   16  .0000E+00
   17  .0000E+00   18  .0000E+00   19  .0000E+00   20  .0000E+00   21  .0000E+00
22  .0000E+00   23  .0000E+00   24  .0000E+00
```

```
 *** AERMOD - VERSION 22112  ***   *** C:\Lakes\Project Files\Garvey\Garvey.isc
***        03/04/24
 *** AERMET - VERSION  16216 ***   ***
***        13:00:54

PAGE 148
 *** MODELOPTs:    RegDFAULT  CONC  ELEV  URBAN  ADJ_U*

                   * SOURCE EMISSION RATE SCALARS WHICH VARY DIURNALLY AND BY DAY
OF WEEK (HRDOW) *

 SOURCE ID = L0001924     ; SOURCE TYPE = VOLUME   :
  HOUR   SCALAR   HOUR   SCALAR   HOUR   SCALAR   HOUR   SCALAR   HOUR   SCALAR
HOUR   SCALAR   HOUR   SCALAR   HOUR   SCALAR
 - - - - - - - - - - - - - - - - - - - - - - - - - - - - - - - - - - - - - - - -
- - - - - - - - - - - - - - - - - - - - - - - - -
                                                DAY OF WEEK = WEEKDAY
    1  .0000E+00    2  .0000E+00    3  .0000E+00    4  .0000E+00    5  .0000E+00
6  .0000E+00    7  .1000E+01    8  .1000E+01
    9  .1000E+01   10  .1000E+01   11  .1000E+01   12  .1000E+01   13  .1000E+01
14  .1000E+01   15  .1000E+01   16  .1000E+01
   17  .0000E+00   18  .0000E+00   19  .0000E+00   20  .0000E+00   21  .0000E+00
22  .0000E+00   23  .0000E+00   24  .0000E+00
                                                DAY OF WEEK = SATURDAY
    1  .0000E+00    2  .0000E+00    3  .0000E+00    4  .0000E+00    5  .0000E+00
6  .0000E+00    7  .0000E+00    8  .0000E+00
    9  .0000E+00   10  .0000E+00   11  .0000E+00   12  .0000E+00   13  .0000E+00
14  .0000E+00   15  .0000E+00   16  .0000E+00
   17  .0000E+00   18  .0000E+00   19  .0000E+00   20  .0000E+00   21  .0000E+00
22  .0000E+00   23  .0000E+00   24  .0000E+00
                                                DAY OF WEEK = SUNDAY
    1  .0000E+00    2  .0000E+00    3  .0000E+00    4  .0000E+00    5  .0000E+00
6  .0000E+00    7  .0000E+00    8  .0000E+00
    9  .0000E+00   10  .0000E+00   11  .0000E+00   12  .0000E+00   13  .0000E+00
14  .0000E+00   15  .0000E+00   16  .0000E+00
   17  .0000E+00   18  .0000E+00   19  .0000E+00   20  .0000E+00   21  .0000E+00
22  .0000E+00   23  .0000E+00   24  .0000E+00
```

*** MODELOPTs: RegDFAULT CONC ELEV URBAN ADJ_U*

* SOURCE EMISSION RATE SCALARS WHICH VARY DIURNALLY AND BY DAY OF WEEK (HRDOW) *

SOURCE ID = L0001925 ; SOURCE TYPE = VOLUME :

HOUR	SCALAR	HOUR	SCALAR	HOUR	SCALAR	HOUR	SCALAR	HOUR	SCALAR	HOUR	SCALAR	HOUR	SCALAR	HOUR	SCALAR

DAY OF WEEK = WEEKDAY

1	.0000E+00	2	.0000E+00	3	.0000E+00	4	.0000E+00	5	.0000E+00	6	.0000E+00	7	.1000E+01	8	.1000E+01
9	.1000E+01	10	.1000E+01	11	.1000E+01	12	.1000E+01	13	.1000E+01	14	.1000E+01	15	.1000E+01	16	.1000E+01
17	.0000E+00	18	.0000E+00	19	.0000E+00	20	.0000E+00	21	.0000E+00	22	.0000E+00	23	.0000E+00	24	.0000E+00

DAY OF WEEK = SATURDAY

1	.0000E+00	2	.0000E+00	3	.0000E+00	4	.0000E+00	5	.0000E+00	6	.0000E+00	7	.0000E+00	8	.0000E+00
9	.0000E+00	10	.0000E+00	11	.0000E+00	12	.0000E+00	13	.0000E+00	14	.0000E+00	15	.0000E+00	16	.0000E+00
17	.0000E+00	18	.0000E+00	19	.0000E+00	20	.0000E+00	21	.0000E+00	22	.0000E+00	23	.0000E+00	24	.0000E+00

DAY OF WEEK = SUNDAY

1	.0000E+00	2	.0000E+00	3	.0000E+00	4	.0000E+00	5	.0000E+00	6	.0000E+00	7	.0000E+00	8	.0000E+00
9	.0000E+00	10	.0000E+00	11	.0000E+00	12	.0000E+00	13	.0000E+00	14	.0000E+00	15	.0000E+00	16	.0000E+00
17	.0000E+00	18	.0000E+00	19	.0000E+00	20	.0000E+00	21	.0000E+00	22	.0000E+00	23	.0000E+00	24	.0000E+00

*** MODELOPTs: RegDFAULT CONC ELEV URBAN ADJ_U*

* SOURCE EMISSION RATE SCALARS WHICH VARY DIURNALLY AND BY DAY OF WEEK (HRDOW) *

SOURCE ID = L0001926 ; SOURCE TYPE = VOLUME :

HOUR	SCALAR	HOUR	SCALAR	HOUR	SCALAR	HOUR	SCALAR	HOUR	SCALAR	HOUR	SCALAR	HOUR	SCALAR	HOUR	SCALAR

DAY OF WEEK = WEEKDAY

1	.0000E+00	2	.0000E+00	3	.0000E+00	4	.0000E+00	5	.0000E+00	6	.0000E+00	7	.1000E+01	8	.1000E+01
9	.1000E+01	10	.1000E+01	11	.1000E+01	12	.1000E+01	13	.1000E+01	14	.1000E+01	15	.1000E+01	16	.1000E+01
17	.0000E+00	18	.0000E+00	19	.0000E+00	20	.0000E+00	21	.0000E+00	22	.0000E+00	23	.0000E+00	24	.0000E+00

DAY OF WEEK = SATURDAY

1	.0000E+00	2	.0000E+00	3	.0000E+00	4	.0000E+00	5	.0000E+00	6	.0000E+00	7	.0000E+00	8	.0000E+00
9	.0000E+00	10	.0000E+00	11	.0000E+00	12	.0000E+00	13	.0000E+00	14	.0000E+00	15	.0000E+00	16	.0000E+00
17	.0000E+00	18	.0000E+00	19	.0000E+00	20	.0000E+00	21	.0000E+00	22	.0000E+00	23	.0000E+00	24	.0000E+00

DAY OF WEEK = SUNDAY

1	.0000E+00	2	.0000E+00	3	.0000E+00	4	.0000E+00	5	.0000E+00	6	.0000E+00	7	.0000E+00	8	.0000E+00
9	.0000E+00	10	.0000E+00	11	.0000E+00	12	.0000E+00	13	.0000E+00	14	.0000E+00	15	.0000E+00	16	.0000E+00
17	.0000E+00	18	.0000E+00	19	.0000E+00	20	.0000E+00	21	.0000E+00	22	.0000E+00	23	.0000E+00	24	.0000E+00

*** MODELOPTs: RegDFAULT CONC ELEV URBAN ADJ_U*

* SOURCE EMISSION RATE SCALARS WHICH VARY DIURNALLY AND BY DAY OF WEEK (HRDOW) *

SOURCE ID = L0001927 ; SOURCE TYPE = VOLUME :

HOUR	SCALAR	HOUR	SCALAR	HOUR	SCALAR	HOUR	SCALAR	HOUR	SCALAR	HOUR	SCALAR	HOUR	SCALAR	HOUR	SCALAR

DAY OF WEEK = WEEKDAY

1	.0000E+00	2	.0000E+00	3	.0000E+00	4	.0000E+00	5	.0000E+00	6	.0000E+00	7	.1000E+01	8	.1000E+01
9	.1000E+01	10	.1000E+01	11	.1000E+01	12	.1000E+01	13	.1000E+01	14	.1000E+01	15	.1000E+01	16	.1000E+01
17	.0000E+00	18	.0000E+00	19	.0000E+00	20	.0000E+00	21	.0000E+00	22	.0000E+00	23	.0000E+00	24	.0000E+00

DAY OF WEEK = SATURDAY

1	.0000E+00	2	.0000E+00	3	.0000E+00	4	.0000E+00	5	.0000E+00	6	.0000E+00	7	.0000E+00	8	.0000E+00
9	.0000E+00	10	.0000E+00	11	.0000E+00	12	.0000E+00	13	.0000E+00	14	.0000E+00	15	.0000E+00	16	.0000E+00
17	.0000E+00	18	.0000E+00	19	.0000E+00	20	.0000E+00	21	.0000E+00	22	.0000E+00	23	.0000E+00	24	.0000E+00

DAY OF WEEK = SUNDAY

1	.0000E+00	2	.0000E+00	3	.0000E+00	4	.0000E+00	5	.0000E+00	6	.0000E+00	7	.0000E+00	8	.0000E+00
9	.0000E+00	10	.0000E+00	11	.0000E+00	12	.0000E+00	13	.0000E+00	14	.0000E+00	15	.0000E+00	16	.0000E+00
17	.0000E+00	18	.0000E+00	19	.0000E+00	20	.0000E+00	21	.0000E+00	22	.0000E+00	23	.0000E+00	24	.0000E+00

```
 *** AERMOD - VERSION 22112  ***   *** C:\Lakes\Project Files\Garvey\Garvey.isc
***        03/04/24
 *** AERMET - VERSION  16216 ***   ***
***        13:00:54

PAGE 152
 *** MODELOPTs:    RegDFAULT  CONC  ELEV  URBAN  ADJ_U*

                   * SOURCE EMISSION RATE SCALARS WHICH VARY DIURNALLY AND BY DAY
OF WEEK (HRDOW) *

 SOURCE ID = L0001928     ; SOURCE TYPE = VOLUME   :
  HOUR   SCALAR   HOUR   SCALAR   HOUR   SCALAR   HOUR   SCALAR   HOUR   SCALAR
HOUR   SCALAR   HOUR   SCALAR   HOUR   SCALAR
 - - - - - - - - - - - - - - - - - - - - - - - - - - - - - - - - - - - - - - - -
- - - - - - - - - - - - - - - - - - - - - - - - -
                                                DAY OF WEEK = WEEKDAY
    1  .0000E+00    2  .0000E+00    3  .0000E+00    4  .0000E+00    5  .0000E+00
6  .0000E+00    7  .1000E+01    8  .1000E+01
    9  .1000E+01   10  .1000E+01   11  .1000E+01   12  .1000E+01   13  .1000E+01
14  .1000E+01   15  .1000E+01   16  .1000E+01
   17  .0000E+00   18  .0000E+00   19  .0000E+00   20  .0000E+00   21  .0000E+00
22  .0000E+00   23  .0000E+00   24  .0000E+00
                                                DAY OF WEEK = SATURDAY
    1  .0000E+00    2  .0000E+00    3  .0000E+00    4  .0000E+00    5  .0000E+00
6  .0000E+00    7  .0000E+00    8  .0000E+00
    9  .0000E+00   10  .0000E+00   11  .0000E+00   12  .0000E+00   13  .0000E+00
14  .0000E+00   15  .0000E+00   16  .0000E+00
   17  .0000E+00   18  .0000E+00   19  .0000E+00   20  .0000E+00   21  .0000E+00
22  .0000E+00   23  .0000E+00   24  .0000E+00
                                                DAY OF WEEK = SUNDAY
    1  .0000E+00    2  .0000E+00    3  .0000E+00    4  .0000E+00    5  .0000E+00
6  .0000E+00    7  .0000E+00    8  .0000E+00
    9  .0000E+00   10  .0000E+00   11  .0000E+00   12  .0000E+00   13  .0000E+00
14  .0000E+00   15  .0000E+00   16  .0000E+00
   17  .0000E+00   18  .0000E+00   19  .0000E+00   20  .0000E+00   21  .0000E+00
22  .0000E+00   23  .0000E+00   24  .0000E+00
```

*** MODELOPTs: RegDFAULT CONC ELEV URBAN ADJ_U*

* SOURCE EMISSION RATE SCALARS WHICH VARY DIURNALLY AND BY DAY OF WEEK (HRDOW) *

SOURCE ID = L0001929 ; SOURCE TYPE = VOLUME :

HOUR	SCALAR	HOUR	SCALAR	HOUR	SCALAR	HOUR	SCALAR	HOUR	SCALAR	HOUR	SCALAR	HOUR	SCALAR	HOUR	SCALAR

DAY OF WEEK = WEEKDAY

1	.0000E+00	2	.0000E+00	3	.0000E+00	4	.0000E+00	5	.0000E+00	6	.0000E+00	7	.1000E+01	8	.1000E+01
9	.1000E+01	10	.1000E+01	11	.1000E+01	12	.1000E+01	13	.1000E+01	14	.1000E+01	15	.1000E+01	16	.1000E+01
17	.0000E+00	18	.0000E+00	19	.0000E+00	20	.0000E+00	21	.0000E+00	22	.0000E+00	23	.0000E+00	24	.0000E+00

DAY OF WEEK = SATURDAY

1	.0000E+00	2	.0000E+00	3	.0000E+00	4	.0000E+00	5	.0000E+00	6	.0000E+00	7	.0000E+00	8	.0000E+00
9	.0000E+00	10	.0000E+00	11	.0000E+00	12	.0000E+00	13	.0000E+00	14	.0000E+00	15	.0000E+00	16	.0000E+00
17	.0000E+00	18	.0000E+00	19	.0000E+00	20	.0000E+00	21	.0000E+00	22	.0000E+00	23	.0000E+00	24	.0000E+00

DAY OF WEEK = SUNDAY

1	.0000E+00	2	.0000E+00	3	.0000E+00	4	.0000E+00	5	.0000E+00	6	.0000E+00	7	.0000E+00	8	.0000E+00
9	.0000E+00	10	.0000E+00	11	.0000E+00	12	.0000E+00	13	.0000E+00	14	.0000E+00	15	.0000E+00	16	.0000E+00
17	.0000E+00	18	.0000E+00	19	.0000E+00	20	.0000E+00	21	.0000E+00	22	.0000E+00	23	.0000E+00	24	.0000E+00

```
 *** AERMOD - VERSION 22112  ***   *** C:\Lakes\Project Files\Garvey\Garvey.isc
***        03/04/24
 *** AERMET - VERSION  16216 ***   ***
***        13:00:54

PAGE 154
 *** MODELOPTs:    RegDFAULT  CONC  ELEV  URBAN  ADJ_U*

                   * SOURCE EMISSION RATE SCALARS WHICH VARY DIURNALLY AND BY DAY
OF WEEK (HRDOW) *

 SOURCE ID = L0001930     ; SOURCE TYPE = VOLUME   :
  HOUR   SCALAR   HOUR   SCALAR   HOUR   SCALAR   HOUR   SCALAR   HOUR   SCALAR
HOUR   SCALAR   HOUR   SCALAR   HOUR   SCALAR
 - - - - - - - - - - - - - - - - - - - - - - - - - - - - - - - - - - - - - - - -
- - - - - - - - - - - - - - - - - - - - - - - - -
                                                DAY OF WEEK = WEEKDAY
    1  .0000E+00    2  .0000E+00    3  .0000E+00    4  .0000E+00    5  .0000E+00
6  .0000E+00    7  .1000E+01    8  .1000E+01
    9  .1000E+01   10  .1000E+01   11  .1000E+01   12  .1000E+01   13  .1000E+01
14  .1000E+01   15  .1000E+01   16  .1000E+01
   17  .0000E+00   18  .0000E+00   19  .0000E+00   20  .0000E+00   21  .0000E+00
22  .0000E+00   23  .0000E+00   24  .0000E+00
                                                DAY OF WEEK = SATURDAY
    1  .0000E+00    2  .0000E+00    3  .0000E+00    4  .0000E+00    5  .0000E+00
6  .0000E+00    7  .0000E+00    8  .0000E+00
    9  .0000E+00   10  .0000E+00   11  .0000E+00   12  .0000E+00   13  .0000E+00
14  .0000E+00   15  .0000E+00   16  .0000E+00
   17  .0000E+00   18  .0000E+00   19  .0000E+00   20  .0000E+00   21  .0000E+00
22  .0000E+00   23  .0000E+00   24  .0000E+00
                                                DAY OF WEEK = SUNDAY
    1  .0000E+00    2  .0000E+00    3  .0000E+00    4  .0000E+00    5  .0000E+00
6  .0000E+00    7  .0000E+00    8  .0000E+00
    9  .0000E+00   10  .0000E+00   11  .0000E+00   12  .0000E+00   13  .0000E+00
14  .0000E+00   15  .0000E+00   16  .0000E+00
   17  .0000E+00   18  .0000E+00   19  .0000E+00   20  .0000E+00   21  .0000E+00
22  .0000E+00   23  .0000E+00   24  .0000E+00
```

```
 *** AERMOD - VERSION 22112  ***   *** C:\Lakes\Project Files\Garvey\Garvey.isc
***        03/04/24
 *** AERMET - VERSION  16216 ***   ***
***        13:00:54

PAGE 155
 *** MODELOPTs:    RegDFAULT  CONC  ELEV  URBAN  ADJ_U*

                   * SOURCE EMISSION RATE SCALARS WHICH VARY DIURNALLY AND BY DAY
OF WEEK (HRDOW) *

 SOURCE ID = L0001931     ; SOURCE TYPE = VOLUME   :
  HOUR   SCALAR   HOUR   SCALAR   HOUR   SCALAR   HOUR   SCALAR   HOUR   SCALAR
HOUR   SCALAR   HOUR   SCALAR   HOUR   SCALAR
 - - - - - - - - - - - - - - - - - - - - - - - - - - - - - - - - - - - - - - - -
- - - - - - - - - - - - - - - - - - - - - - - - - -
                                                DAY OF WEEK = WEEKDAY
    1  .0000E+00    2  .0000E+00    3  .0000E+00    4  .0000E+00    5  .0000E+00
6  .0000E+00    7  .1000E+01    8  .1000E+01
    9  .1000E+01   10  .1000E+01   11  .1000E+01   12  .1000E+01   13  .1000E+01
14  .1000E+01   15  .1000E+01   16  .1000E+01
   17  .0000E+00   18  .0000E+00   19  .0000E+00   20  .0000E+00   21  .0000E+00
22  .0000E+00   23  .0000E+00   24  .0000E+00
                                                DAY OF WEEK = SATURDAY
    1  .0000E+00    2  .0000E+00    3  .0000E+00    4  .0000E+00    5  .0000E+00
6  .0000E+00    7  .0000E+00    8  .0000E+00
    9  .0000E+00   10  .0000E+00   11  .0000E+00   12  .0000E+00   13  .0000E+00
14  .0000E+00   15  .0000E+00   16  .0000E+00
   17  .0000E+00   18  .0000E+00   19  .0000E+00   20  .0000E+00   21  .0000E+00
22  .0000E+00   23  .0000E+00   24  .0000E+00
                                                DAY OF WEEK = SUNDAY
    1  .0000E+00    2  .0000E+00    3  .0000E+00    4  .0000E+00    5  .0000E+00
6  .0000E+00    7  .0000E+00    8  .0000E+00
    9  .0000E+00   10  .0000E+00   11  .0000E+00   12  .0000E+00   13  .0000E+00
14  .0000E+00   15  .0000E+00   16  .0000E+00
   17  .0000E+00   18  .0000E+00   19  .0000E+00   20  .0000E+00   21  .0000E+00
22  .0000E+00   23  .0000E+00   24  .0000E+00
```

```
 *** AERMOD - VERSION 22112  ***   *** C:\Lakes\Project Files\Garvey\Garvey.isc
***        03/04/24
 *** AERMET - VERSION  16216 ***   ***
***        13:00:54

PAGE 156
 *** MODELOPTs:    RegDFAULT  CONC  ELEV  URBAN  ADJ_U*

                   * SOURCE EMISSION RATE SCALARS WHICH VARY DIURNALLY AND BY DAY
OF WEEK (HRDOW) *

 SOURCE ID = L0001932     ; SOURCE TYPE = VOLUME   :
  HOUR   SCALAR   HOUR   SCALAR   HOUR   SCALAR   HOUR   SCALAR   HOUR   SCALAR
HOUR   SCALAR   HOUR   SCALAR   HOUR   SCALAR
 - - - - - - - - - - - - - - - - - - - - - - - - - - - - - - - - - - - - - - - -
- - - - - - - - - - - - - - - - - - - - - - - - -
                                                DAY OF WEEK = WEEKDAY
    1  .0000E+00    2  .0000E+00    3  .0000E+00    4  .0000E+00    5  .0000E+00
6  .0000E+00    7  .1000E+01    8  .1000E+01
    9  .1000E+01   10  .1000E+01   11  .1000E+01   12  .1000E+01   13  .1000E+01
14  .1000E+01   15  .1000E+01   16  .1000E+01
   17  .0000E+00   18  .0000E+00   19  .0000E+00   20  .0000E+00   21  .0000E+00
22  .0000E+00   23  .0000E+00   24  .0000E+00
                                                DAY OF WEEK = SATURDAY
    1  .0000E+00    2  .0000E+00    3  .0000E+00    4  .0000E+00    5  .0000E+00
6  .0000E+00    7  .0000E+00    8  .0000E+00
    9  .0000E+00   10  .0000E+00   11  .0000E+00   12  .0000E+00   13  .0000E+00
14  .0000E+00   15  .0000E+00   16  .0000E+00
   17  .0000E+00   18  .0000E+00   19  .0000E+00   20  .0000E+00   21  .0000E+00
22  .0000E+00   23  .0000E+00   24  .0000E+00
                                                DAY OF WEEK = SUNDAY
    1  .0000E+00    2  .0000E+00    3  .0000E+00    4  .0000E+00    5  .0000E+00
6  .0000E+00    7  .0000E+00    8  .0000E+00
    9  .0000E+00   10  .0000E+00   11  .0000E+00   12  .0000E+00   13  .0000E+00
14  .0000E+00   15  .0000E+00   16  .0000E+00
   17  .0000E+00   18  .0000E+00   19  .0000E+00   20  .0000E+00   21  .0000E+00
22  .0000E+00   23  .0000E+00   24  .0000E+00
```

*** MODELOPTs: RegDFAULT CONC ELEV URBAN ADJ_U*

* SOURCE EMISSION RATE SCALARS WHICH VARY DIURNALLY AND BY DAY OF WEEK (HRDOW) *

SOURCE ID = L0001933 ; SOURCE TYPE = VOLUME :

HOUR	SCALAR	HOUR	SCALAR	HOUR	SCALAR	HOUR	SCALAR	HOUR	SCALAR	HOUR	SCALAR	HOUR	SCALAR	HOUR	SCALAR

DAY OF WEEK = WEEKDAY

1	.0000E+00	2	.0000E+00	3	.0000E+00	4	.0000E+00	5	.0000E+00	6	.0000E+00	7	.1000E+01	8	.1000E+01
9	.1000E+01	10	.1000E+01	11	.1000E+01	12	.1000E+01	13	.1000E+01	14	.1000E+01	15	.1000E+01	16	.1000E+01
17	.0000E+00	18	.0000E+00	19	.0000E+00	20	.0000E+00	21	.0000E+00	22	.0000E+00	23	.0000E+00	24	.0000E+00

DAY OF WEEK = SATURDAY

1	.0000E+00	2	.0000E+00	3	.0000E+00	4	.0000E+00	5	.0000E+00	6	.0000E+00	7	.0000E+00	8	.0000E+00
9	.0000E+00	10	.0000E+00	11	.0000E+00	12	.0000E+00	13	.0000E+00	14	.0000E+00	15	.0000E+00	16	.0000E+00
17	.0000E+00	18	.0000E+00	19	.0000E+00	20	.0000E+00	21	.0000E+00	22	.0000E+00	23	.0000E+00	24	.0000E+00

DAY OF WEEK = SUNDAY

1	.0000E+00	2	.0000E+00	3	.0000E+00	4	.0000E+00	5	.0000E+00	6	.0000E+00	7	.0000E+00	8	.0000E+00
9	.0000E+00	10	.0000E+00	11	.0000E+00	12	.0000E+00	13	.0000E+00	14	.0000E+00	15	.0000E+00	16	.0000E+00
17	.0000E+00	18	.0000E+00	19	.0000E+00	20	.0000E+00	21	.0000E+00	22	.0000E+00	23	.0000E+00	24	.0000E+00

```
 *** AERMOD - VERSION 22112  ***   *** C:\Lakes\Project Files\Garvey\Garvey.isc
***        03/04/24
 *** AERMET - VERSION  16216 ***   ***
***        13:00:54

PAGE 158
 *** MODELOPTs:    RegDFAULT  CONC  ELEV  URBAN  ADJ_U*

                   * SOURCE EMISSION RATE SCALARS WHICH VARY DIURNALLY AND BY DAY
OF WEEK (HRDOW) *

 SOURCE ID = L0001934     ; SOURCE TYPE = VOLUME   :
  HOUR   SCALAR   HOUR   SCALAR   HOUR   SCALAR   HOUR   SCALAR   HOUR   SCALAR
HOUR   SCALAR   HOUR   SCALAR   HOUR   SCALAR
 - - - - - - - - - - - - - - - - - - - - - - - - - - - - - - - - - - - - - - - -
- - - - - - - - - - - - - - - - - - - - - - - - -
                                                DAY OF WEEK = WEEKDAY
    1  .0000E+00    2  .0000E+00    3  .0000E+00    4  .0000E+00    5  .0000E+00
6  .0000E+00    7  .1000E+01    8  .1000E+01
    9  .1000E+01   10  .1000E+01   11  .1000E+01   12  .1000E+01   13  .1000E+01
14  .1000E+01   15  .1000E+01   16  .1000E+01
   17  .0000E+00   18  .0000E+00   19  .0000E+00   20  .0000E+00   21  .0000E+00
22  .0000E+00   23  .0000E+00   24  .0000E+00
                                                DAY OF WEEK = SATURDAY
    1  .0000E+00    2  .0000E+00    3  .0000E+00    4  .0000E+00    5  .0000E+00
6  .0000E+00    7  .0000E+00    8  .0000E+00
    9  .0000E+00   10  .0000E+00   11  .0000E+00   12  .0000E+00   13  .0000E+00
14  .0000E+00   15  .0000E+00   16  .0000E+00
   17  .0000E+00   18  .0000E+00   19  .0000E+00   20  .0000E+00   21  .0000E+00
22  .0000E+00   23  .0000E+00   24  .0000E+00
                                                DAY OF WEEK = SUNDAY
    1  .0000E+00    2  .0000E+00    3  .0000E+00    4  .0000E+00    5  .0000E+00
6  .0000E+00    7  .0000E+00    8  .0000E+00
    9  .0000E+00   10  .0000E+00   11  .0000E+00   12  .0000E+00   13  .0000E+00
14  .0000E+00   15  .0000E+00   16  .0000E+00
   17  .0000E+00   18  .0000E+00   19  .0000E+00   20  .0000E+00   21  .0000E+00
22  .0000E+00   23  .0000E+00   24  .0000E+00
```

```
 *** AERMOD - VERSION 22112  ***   *** C:\Lakes\Project Files\Garvey\Garvey.isc
***        03/04/24
 *** AERMET - VERSION  16216 ***   ***
***        13:00:54

PAGE 159
 *** MODELOPTs:    RegDFAULT  CONC  ELEV  URBAN  ADJ_U*

                   * SOURCE EMISSION RATE SCALARS WHICH VARY DIURNALLY AND BY DAY
OF WEEK (HRDOW) *

 SOURCE ID = L0001935     ; SOURCE TYPE = VOLUME   :
  HOUR   SCALAR   HOUR   SCALAR   HOUR   SCALAR   HOUR   SCALAR   HOUR   SCALAR
HOUR   SCALAR   HOUR   SCALAR   HOUR   SCALAR
 - - - - - - - - - - - - - - - - - - - - - - - - - - - - - - - - - - - - - - - -
- - - - - - - - - - - - - - - - - - - - - - - - -
                                                DAY OF WEEK = WEEKDAY
    1  .0000E+00    2  .0000E+00    3  .0000E+00    4  .0000E+00    5  .0000E+00
6  .0000E+00    7  .1000E+01    8  .1000E+01
    9  .1000E+01   10  .1000E+01   11  .1000E+01   12  .1000E+01   13  .1000E+01
14  .1000E+01   15  .1000E+01   16  .1000E+01
   17  .0000E+00   18  .0000E+00   19  .0000E+00   20  .0000E+00   21  .0000E+00
22  .0000E+00   23  .0000E+00   24  .0000E+00
                                                DAY OF WEEK = SATURDAY
    1  .0000E+00    2  .0000E+00    3  .0000E+00    4  .0000E+00    5  .0000E+00
6  .0000E+00    7  .0000E+00    8  .0000E+00
    9  .0000E+00   10  .0000E+00   11  .0000E+00   12  .0000E+00   13  .0000E+00
14  .0000E+00   15  .0000E+00   16  .0000E+00
   17  .0000E+00   18  .0000E+00   19  .0000E+00   20  .0000E+00   21  .0000E+00
22  .0000E+00   23  .0000E+00   24  .0000E+00
                                                DAY OF WEEK = SUNDAY
    1  .0000E+00    2  .0000E+00    3  .0000E+00    4  .0000E+00    5  .0000E+00
6  .0000E+00    7  .0000E+00    8  .0000E+00
    9  .0000E+00   10  .0000E+00   11  .0000E+00   12  .0000E+00   13  .0000E+00
14  .0000E+00   15  .0000E+00   16  .0000E+00
   17  .0000E+00   18  .0000E+00   19  .0000E+00   20  .0000E+00   21  .0000E+00
22  .0000E+00   23  .0000E+00   24  .0000E+00
```

```
 *** AERMOD - VERSION 22112  ***   *** C:\Lakes\Project Files\Garvey\Garvey.isc
***        03/04/24
 *** AERMET - VERSION  16216 ***   ***
***        13:00:54

PAGE 160
 *** MODELOPTs:    RegDFAULT  CONC  ELEV  URBAN  ADJ_U*

                   * SOURCE EMISSION RATE SCALARS WHICH VARY DIURNALLY AND BY DAY
OF WEEK (HRDOW) *

 SOURCE ID = L0001936     ; SOURCE TYPE = VOLUME   :
  HOUR   SCALAR   HOUR   SCALAR   HOUR   SCALAR   HOUR   SCALAR   HOUR   SCALAR
HOUR   SCALAR   HOUR   SCALAR   HOUR   SCALAR
 - - - - - - - - - - - - - - - - - - - - - - - - - - - - - - - - - - - - - - - -
- - - - - - - - - - - - - - - - - - - - - - - - -
                                                DAY OF WEEK = WEEKDAY
    1  .0000E+00    2  .0000E+00    3  .0000E+00    4  .0000E+00    5  .0000E+00
6  .0000E+00    7  .1000E+01    8  .1000E+01
    9  .1000E+01   10  .1000E+01   11  .1000E+01   12  .1000E+01   13  .1000E+01
14  .1000E+01   15  .1000E+01   16  .1000E+01
   17  .0000E+00   18  .0000E+00   19  .0000E+00   20  .0000E+00   21  .0000E+00
22  .0000E+00   23  .0000E+00   24  .0000E+00
                                                DAY OF WEEK = SATURDAY
    1  .0000E+00    2  .0000E+00    3  .0000E+00    4  .0000E+00    5  .0000E+00
6  .0000E+00    7  .0000E+00    8  .0000E+00
    9  .0000E+00   10  .0000E+00   11  .0000E+00   12  .0000E+00   13  .0000E+00
14  .0000E+00   15  .0000E+00   16  .0000E+00
   17  .0000E+00   18  .0000E+00   19  .0000E+00   20  .0000E+00   21  .0000E+00
22  .0000E+00   23  .0000E+00   24  .0000E+00
                                                DAY OF WEEK = SUNDAY
    1  .0000E+00    2  .0000E+00    3  .0000E+00    4  .0000E+00    5  .0000E+00
6  .0000E+00    7  .0000E+00    8  .0000E+00
    9  .0000E+00   10  .0000E+00   11  .0000E+00   12  .0000E+00   13  .0000E+00
14  .0000E+00   15  .0000E+00   16  .0000E+00
   17  .0000E+00   18  .0000E+00   19  .0000E+00   20  .0000E+00   21  .0000E+00
22  .0000E+00   23  .0000E+00   24  .0000E+00
```

*** MODELOPTs: RegDFAULT CONC ELEV URBAN ADJ_U*

* SOURCE EMISSION RATE SCALARS WHICH VARY DIURNALLY AND BY DAY OF WEEK (HRDOW) *

SOURCE ID = L0001937 ; SOURCE TYPE = VOLUME :

HOUR	SCALAR	HOUR	SCALAR	HOUR	SCALAR	HOUR	SCALAR	HOUR	SCALAR	HOUR	SCALAR	HOUR	SCALAR	HOUR	SCALAR

DAY OF WEEK = WEEKDAY

1	.0000E+00	2	.0000E+00	3	.0000E+00	4	.0000E+00	5	.0000E+00	6	.0000E+00	7	.1000E+01	8	.1000E+01
9	.1000E+01	10	.1000E+01	11	.1000E+01	12	.1000E+01	13	.1000E+01	14	.1000E+01	15	.1000E+01	16	.1000E+01
17	.0000E+00	18	.0000E+00	19	.0000E+00	20	.0000E+00	21	.0000E+00	22	.0000E+00	23	.0000E+00	24	.0000E+00

DAY OF WEEK = SATURDAY

1	.0000E+00	2	.0000E+00	3	.0000E+00	4	.0000E+00	5	.0000E+00	6	.0000E+00	7	.0000E+00	8	.0000E+00
9	.0000E+00	10	.0000E+00	11	.0000E+00	12	.0000E+00	13	.0000E+00	14	.0000E+00	15	.0000E+00	16	.0000E+00
17	.0000E+00	18	.0000E+00	19	.0000E+00	20	.0000E+00	21	.0000E+00	22	.0000E+00	23	.0000E+00	24	.0000E+00

DAY OF WEEK = SUNDAY

1	.0000E+00	2	.0000E+00	3	.0000E+00	4	.0000E+00	5	.0000E+00	6	.0000E+00	7	.0000E+00	8	.0000E+00
9	.0000E+00	10	.0000E+00	11	.0000E+00	12	.0000E+00	13	.0000E+00	14	.0000E+00	15	.0000E+00	16	.0000E+00
17	.0000E+00	18	.0000E+00	19	.0000E+00	20	.0000E+00	21	.0000E+00	22	.0000E+00	23	.0000E+00	24	.0000E+00

```
 *** AERMOD - VERSION 22112  ***   *** C:\Lakes\Project Files\Garvey\Garvey.isc
***        03/04/24
 *** AERMET - VERSION  16216 ***   ***
***        13:00:54

PAGE 162
 *** MODELOPTs:    RegDFAULT  CONC  ELEV  URBAN  ADJ_U*

                   * SOURCE EMISSION RATE SCALARS WHICH VARY DIURNALLY AND BY DAY
OF WEEK (HRDOW) *

 SOURCE ID = L0001938     ; SOURCE TYPE = VOLUME   :
  HOUR   SCALAR   HOUR   SCALAR   HOUR   SCALAR   HOUR   SCALAR   HOUR   SCALAR
HOUR   SCALAR   HOUR   SCALAR   HOUR   SCALAR
 - - - - - - - - - - - - - - - - - - - - - - - - - - - - - - - - - - - - - - - -
- - - - - - - - - - - - - - - - - - - - - - - - -
                                                DAY OF WEEK = WEEKDAY
    1  .0000E+00    2  .0000E+00    3  .0000E+00    4  .0000E+00    5  .0000E+00
6  .0000E+00    7  .1000E+01    8  .1000E+01
    9  .1000E+01   10  .1000E+01   11  .1000E+01   12  .1000E+01   13  .1000E+01
14  .1000E+01   15  .1000E+01   16  .1000E+01
   17  .0000E+00   18  .0000E+00   19  .0000E+00   20  .0000E+00   21  .0000E+00
22  .0000E+00   23  .0000E+00   24  .0000E+00
                                                DAY OF WEEK = SATURDAY
    1  .0000E+00    2  .0000E+00    3  .0000E+00    4  .0000E+00    5  .0000E+00
6  .0000E+00    7  .0000E+00    8  .0000E+00
    9  .0000E+00   10  .0000E+00   11  .0000E+00   12  .0000E+00   13  .0000E+00
14  .0000E+00   15  .0000E+00   16  .0000E+00
   17  .0000E+00   18  .0000E+00   19  .0000E+00   20  .0000E+00   21  .0000E+00
22  .0000E+00   23  .0000E+00   24  .0000E+00
                                                DAY OF WEEK = SUNDAY
    1  .0000E+00    2  .0000E+00    3  .0000E+00    4  .0000E+00    5  .0000E+00
6  .0000E+00    7  .0000E+00    8  .0000E+00
    9  .0000E+00   10  .0000E+00   11  .0000E+00   12  .0000E+00   13  .0000E+00
14  .0000E+00   15  .0000E+00   16  .0000E+00
   17  .0000E+00   18  .0000E+00   19  .0000E+00   20  .0000E+00   21  .0000E+00
22  .0000E+00   23  .0000E+00   24  .0000E+00
```

```
 *** AERMOD - VERSION 22112  ***   *** C:\Lakes\Project Files\Garvey\Garvey.isc
***        03/04/24
 *** AERMET - VERSION  16216 ***   ***
***        13:00:54

PAGE 163
 *** MODELOPTs:    RegDFAULT  CONC  ELEV  URBAN  ADJ_U*

                   * SOURCE EMISSION RATE SCALARS WHICH VARY DIURNALLY AND BY DAY
OF WEEK (HRDOW) *

 SOURCE ID = L0001939     ; SOURCE TYPE = VOLUME   :
  HOUR   SCALAR   HOUR   SCALAR   HOUR   SCALAR   HOUR   SCALAR   HOUR   SCALAR
HOUR   SCALAR   HOUR   SCALAR   HOUR   SCALAR
 - - - - - - - - - - - - - - - - - - - - - - - - - - - - - - - - - - - - - - - -
- - - - - - - - - - - - - - - - - - - - - - - - -
                                                DAY OF WEEK = WEEKDAY
    1  .0000E+00    2  .0000E+00    3  .0000E+00    4  .0000E+00    5  .0000E+00
6  .0000E+00    7  .1000E+01    8  .1000E+01
    9  .1000E+01   10  .1000E+01   11  .1000E+01   12  .1000E+01   13  .1000E+01
14  .1000E+01   15  .1000E+01   16  .1000E+01
   17  .0000E+00   18  .0000E+00   19  .0000E+00   20  .0000E+00   21  .0000E+00
22  .0000E+00   23  .0000E+00   24  .0000E+00
                                                DAY OF WEEK = SATURDAY
    1  .0000E+00    2  .0000E+00    3  .0000E+00    4  .0000E+00    5  .0000E+00
6  .0000E+00    7  .0000E+00    8  .0000E+00
    9  .0000E+00   10  .0000E+00   11  .0000E+00   12  .0000E+00   13  .0000E+00
14  .0000E+00   15  .0000E+00   16  .0000E+00
   17  .0000E+00   18  .0000E+00   19  .0000E+00   20  .0000E+00   21  .0000E+00
22  .0000E+00   23  .0000E+00   24  .0000E+00
                                                DAY OF WEEK = SUNDAY
    1  .0000E+00    2  .0000E+00    3  .0000E+00    4  .0000E+00    5  .0000E+00
6  .0000E+00    7  .0000E+00    8  .0000E+00
    9  .0000E+00   10  .0000E+00   11  .0000E+00   12  .0000E+00   13  .0000E+00
14  .0000E+00   15  .0000E+00   16  .0000E+00
   17  .0000E+00   18  .0000E+00   19  .0000E+00   20  .0000E+00   21  .0000E+00
22  .0000E+00   23  .0000E+00   24  .0000E+00
```

```
 *** AERMOD - VERSION 22112  ***   *** C:\Lakes\Project Files\Garvey\Garvey.isc
***        03/04/24
 *** AERMET - VERSION  16216 ***   ***
***        13:00:54

PAGE 164
 *** MODELOPTs:    RegDFAULT  CONC  ELEV  URBAN  ADJ_U*

                   * SOURCE EMISSION RATE SCALARS WHICH VARY DIURNALLY AND BY DAY
OF WEEK (HRDOW) *

 SOURCE ID = L0001940     ; SOURCE TYPE = VOLUME   :
  HOUR   SCALAR   HOUR   SCALAR   HOUR   SCALAR   HOUR   SCALAR   HOUR   SCALAR
HOUR   SCALAR   HOUR   SCALAR   HOUR   SCALAR
 - - - - - - - - - - - - - - - - - - - - - - - - - - - - - - - - - - - - - - - -
- - - - - - - - - - - - - - - - - - - - - - - - - -
                                                DAY OF WEEK = WEEKDAY
    1  .0000E+00    2  .0000E+00    3  .0000E+00    4  .0000E+00    5  .0000E+00
6  .0000E+00    7  .1000E+01    8  .1000E+01
    9  .1000E+01   10  .1000E+01   11  .1000E+01   12  .1000E+01   13  .1000E+01
14  .1000E+01   15  .1000E+01   16  .1000E+01
   17  .0000E+00   18  .0000E+00   19  .0000E+00   20  .0000E+00   21  .0000E+00
22  .0000E+00   23  .0000E+00   24  .0000E+00
                                                DAY OF WEEK = SATURDAY
    1  .0000E+00    2  .0000E+00    3  .0000E+00    4  .0000E+00    5  .0000E+00
6  .0000E+00    7  .0000E+00    8  .0000E+00
    9  .0000E+00   10  .0000E+00   11  .0000E+00   12  .0000E+00   13  .0000E+00
14  .0000E+00   15  .0000E+00   16  .0000E+00
   17  .0000E+00   18  .0000E+00   19  .0000E+00   20  .0000E+00   21  .0000E+00
22  .0000E+00   23  .0000E+00   24  .0000E+00
                                                DAY OF WEEK = SUNDAY
    1  .0000E+00    2  .0000E+00    3  .0000E+00    4  .0000E+00    5  .0000E+00
6  .0000E+00    7  .0000E+00    8  .0000E+00
    9  .0000E+00   10  .0000E+00   11  .0000E+00   12  .0000E+00   13  .0000E+00
14  .0000E+00   15  .0000E+00   16  .0000E+00
   17  .0000E+00   18  .0000E+00   19  .0000E+00   20  .0000E+00   21  .0000E+00
22  .0000E+00   23  .0000E+00   24  .0000E+00
```

```
 *** AERMOD - VERSION 22112  ***   *** C:\Lakes\Project Files\Garvey\Garvey.isc
***        03/04/24
 *** AERMET - VERSION  16216 ***   ***
***        13:00:54

PAGE 165
 *** MODELOPTs:    RegDFAULT  CONC  ELEV  URBAN  ADJ_U*

                   * SOURCE EMISSION RATE SCALARS WHICH VARY DIURNALLY AND BY DAY
OF WEEK (HRDOW) *

 SOURCE ID = L0001941     ; SOURCE TYPE = VOLUME   :
  HOUR   SCALAR   HOUR   SCALAR   HOUR   SCALAR   HOUR   SCALAR   HOUR   SCALAR
HOUR   SCALAR   HOUR   SCALAR   HOUR   SCALAR
 - - - - - - - - - - - - - - - - - - - - - - - - - - - - - - - - - - - - - - - -
- - - - - - - - - - - - - - - - - - - - - - - - -
                                                DAY OF WEEK = WEEKDAY
    1  .0000E+00    2  .0000E+00    3  .0000E+00    4  .0000E+00    5  .0000E+00
6  .0000E+00    7  .1000E+01    8  .1000E+01
    9  .1000E+01   10  .1000E+01   11  .1000E+01   12  .1000E+01   13  .1000E+01
14  .1000E+01   15  .1000E+01   16  .1000E+01
   17  .0000E+00   18  .0000E+00   19  .0000E+00   20  .0000E+00   21  .0000E+00
22  .0000E+00   23  .0000E+00   24  .0000E+00
                                                DAY OF WEEK = SATURDAY
    1  .0000E+00    2  .0000E+00    3  .0000E+00    4  .0000E+00    5  .0000E+00
6  .0000E+00    7  .0000E+00    8  .0000E+00
    9  .0000E+00   10  .0000E+00   11  .0000E+00   12  .0000E+00   13  .0000E+00
14  .0000E+00   15  .0000E+00   16  .0000E+00
   17  .0000E+00   18  .0000E+00   19  .0000E+00   20  .0000E+00   21  .0000E+00
22  .0000E+00   23  .0000E+00   24  .0000E+00
                                                DAY OF WEEK = SUNDAY
    1  .0000E+00    2  .0000E+00    3  .0000E+00    4  .0000E+00    5  .0000E+00
6  .0000E+00    7  .0000E+00    8  .0000E+00
    9  .0000E+00   10  .0000E+00   11  .0000E+00   12  .0000E+00   13  .0000E+00
14  .0000E+00   15  .0000E+00   16  .0000E+00
   17  .0000E+00   18  .0000E+00   19  .0000E+00   20  .0000E+00   21  .0000E+00
22  .0000E+00   23  .0000E+00   24  .0000E+00
```

```
 *** AERMOD - VERSION 22112  ***   *** C:\Lakes\Project Files\Garvey\Garvey.isc
***        03/04/24
 *** AERMET - VERSION  16216 ***   ***
***        13:00:54

PAGE 166
 *** MODELOPTs:    RegDFAULT  CONC  ELEV  URBAN  ADJ_U*

                   * SOURCE EMISSION RATE SCALARS WHICH VARY DIURNALLY AND BY DAY
OF WEEK (HRDOW) *

 SOURCE ID = L0001942     ; SOURCE TYPE = VOLUME   :
  HOUR   SCALAR   HOUR   SCALAR   HOUR   SCALAR   HOUR   SCALAR   HOUR   SCALAR
HOUR   SCALAR   HOUR   SCALAR   HOUR   SCALAR
 - - - - - - - - - - - - - - - - - - - - - - - - - - - - - - - - - - - - - - - -
- - - - - - - - - - - - - - - - - - - - - - - - -
                                                DAY OF WEEK = WEEKDAY
    1  .0000E+00    2  .0000E+00    3  .0000E+00    4  .0000E+00    5  .0000E+00
6  .0000E+00    7  .1000E+01    8  .1000E+01
    9  .1000E+01   10  .1000E+01   11  .1000E+01   12  .1000E+01   13  .1000E+01
14  .1000E+01   15  .1000E+01   16  .1000E+01
   17  .0000E+00   18  .0000E+00   19  .0000E+00   20  .0000E+00   21  .0000E+00
22  .0000E+00   23  .0000E+00   24  .0000E+00
                                                DAY OF WEEK = SATURDAY
    1  .0000E+00    2  .0000E+00    3  .0000E+00    4  .0000E+00    5  .0000E+00
6  .0000E+00    7  .0000E+00    8  .0000E+00
    9  .0000E+00   10  .0000E+00   11  .0000E+00   12  .0000E+00   13  .0000E+00
14  .0000E+00   15  .0000E+00   16  .0000E+00
   17  .0000E+00   18  .0000E+00   19  .0000E+00   20  .0000E+00   21  .0000E+00
22  .0000E+00   23  .0000E+00   24  .0000E+00
                                                DAY OF WEEK = SUNDAY
    1  .0000E+00    2  .0000E+00    3  .0000E+00    4  .0000E+00    5  .0000E+00
6  .0000E+00    7  .0000E+00    8  .0000E+00
    9  .0000E+00   10  .0000E+00   11  .0000E+00   12  .0000E+00   13  .0000E+00
14  .0000E+00   15  .0000E+00   16  .0000E+00
   17  .0000E+00   18  .0000E+00   19  .0000E+00   20  .0000E+00   21  .0000E+00
22  .0000E+00   23  .0000E+00   24  .0000E+00
```

*** MODELOPTs: RegDFAULT CONC ELEV URBAN ADJ_U*

* SOURCE EMISSION RATE SCALARS WHICH VARY DIURNALLY AND BY DAY OF WEEK (HRDOW) *

SOURCE ID = L0001943 ; SOURCE TYPE = VOLUME :

HOUR	SCALAR	HOUR	SCALAR	HOUR	SCALAR	HOUR	SCALAR	HOUR	SCALAR	HOUR	SCALAR	HOUR	SCALAR	HOUR	SCALAR

DAY OF WEEK = WEEKDAY

1	.0000E+00	2	.0000E+00	3	.0000E+00	4	.0000E+00	5	.0000E+00	6	.0000E+00	7	.1000E+01	8	.1000E+01
9	.1000E+01	10	.1000E+01	11	.1000E+01	12	.1000E+01	13	.1000E+01	14	.1000E+01	15	.1000E+01	16	.1000E+01
17	.0000E+00	18	.0000E+00	19	.0000E+00	20	.0000E+00	21	.0000E+00	22	.0000E+00	23	.0000E+00	24	.0000E+00

DAY OF WEEK = SATURDAY

1	.0000E+00	2	.0000E+00	3	.0000E+00	4	.0000E+00	5	.0000E+00	6	.0000E+00	7	.0000E+00	8	.0000E+00
9	.0000E+00	10	.0000E+00	11	.0000E+00	12	.0000E+00	13	.0000E+00	14	.0000E+00	15	.0000E+00	16	.0000E+00
17	.0000E+00	18	.0000E+00	19	.0000E+00	20	.0000E+00	21	.0000E+00	22	.0000E+00	23	.0000E+00	24	.0000E+00

DAY OF WEEK = SUNDAY

1	.0000E+00	2	.0000E+00	3	.0000E+00	4	.0000E+00	5	.0000E+00	6	.0000E+00	7	.0000E+00	8	.0000E+00
9	.0000E+00	10	.0000E+00	11	.0000E+00	12	.0000E+00	13	.0000E+00	14	.0000E+00	15	.0000E+00	16	.0000E+00
17	.0000E+00	18	.0000E+00	19	.0000E+00	20	.0000E+00	21	.0000E+00	22	.0000E+00	23	.0000E+00	24	.0000E+00

```
 *** AERMOD - VERSION 22112  ***   *** C:\Lakes\Project Files\Garvey\Garvey.isc
***        03/04/24
 *** AERMET - VERSION  16216 ***   ***
***        13:00:54

PAGE 168
 *** MODELOPTs:    RegDFAULT  CONC  ELEV  URBAN  ADJ_U*

                   * SOURCE EMISSION RATE SCALARS WHICH VARY DIURNALLY AND BY DAY
OF WEEK (HRDOW) *

 SOURCE ID = L0001944     ; SOURCE TYPE = VOLUME   :
  HOUR   SCALAR   HOUR   SCALAR   HOUR   SCALAR   HOUR   SCALAR   HOUR   SCALAR
HOUR   SCALAR   HOUR   SCALAR   HOUR   SCALAR
 - - - - - - - - - - - - - - - - - - - - - - - - - - - - - - - - - - - - - - - -
- - - - - - - - - - - - - - - - - - - - - - - - -
                                                DAY OF WEEK = WEEKDAY
    1  .0000E+00    2  .0000E+00    3  .0000E+00    4  .0000E+00    5  .0000E+00
6  .0000E+00    7  .1000E+01    8  .1000E+01
    9  .1000E+01   10  .1000E+01   11  .1000E+01   12  .1000E+01   13  .1000E+01
14  .1000E+01   15  .1000E+01   16  .1000E+01
   17  .0000E+00   18  .0000E+00   19  .0000E+00   20  .0000E+00   21  .0000E+00
22  .0000E+00   23  .0000E+00   24  .0000E+00
                                                DAY OF WEEK = SATURDAY
    1  .0000E+00    2  .0000E+00    3  .0000E+00    4  .0000E+00    5  .0000E+00
6  .0000E+00    7  .0000E+00    8  .0000E+00
    9  .0000E+00   10  .0000E+00   11  .0000E+00   12  .0000E+00   13  .0000E+00
14  .0000E+00   15  .0000E+00   16  .0000E+00
   17  .0000E+00   18  .0000E+00   19  .0000E+00   20  .0000E+00   21  .0000E+00
22  .0000E+00   23  .0000E+00   24  .0000E+00
                                                DAY OF WEEK = SUNDAY
    1  .0000E+00    2  .0000E+00    3  .0000E+00    4  .0000E+00    5  .0000E+00
6  .0000E+00    7  .0000E+00    8  .0000E+00
    9  .0000E+00   10  .0000E+00   11  .0000E+00   12  .0000E+00   13  .0000E+00
14  .0000E+00   15  .0000E+00   16  .0000E+00
   17  .0000E+00   18  .0000E+00   19  .0000E+00   20  .0000E+00   21  .0000E+00
22  .0000E+00   23  .0000E+00   24  .0000E+00
```

*** MODELOPTs: RegDFAULT CONC ELEV URBAN ADJ_U*

* SOURCE EMISSION RATE SCALARS WHICH VARY DIURNALLY AND BY DAY OF WEEK (HRDOW) *

SOURCE ID = L0001945 ; SOURCE TYPE = VOLUME :

HOUR	SCALAR	HOUR	SCALAR	HOUR	SCALAR	HOUR	SCALAR	HOUR	SCALAR	HOUR	SCALAR	HOUR	SCALAR	HOUR	SCALAR

DAY OF WEEK = WEEKDAY

1	.0000E+00	2	.0000E+00	3	.0000E+00	4	.0000E+00	5	.0000E+00	6	.0000E+00	7	.1000E+01	8	.1000E+01
9	.1000E+01	10	.1000E+01	11	.1000E+01	12	.1000E+01	13	.1000E+01	14	.1000E+01	15	.1000E+01	16	.1000E+01
17	.0000E+00	18	.0000E+00	19	.0000E+00	20	.0000E+00	21	.0000E+00	22	.0000E+00	23	.0000E+00	24	.0000E+00

DAY OF WEEK = SATURDAY

1	.0000E+00	2	.0000E+00	3	.0000E+00	4	.0000E+00	5	.0000E+00	6	.0000E+00	7	.0000E+00	8	.0000E+00
9	.0000E+00	10	.0000E+00	11	.0000E+00	12	.0000E+00	13	.0000E+00	14	.0000E+00	15	.0000E+00	16	.0000E+00
17	.0000E+00	18	.0000E+00	19	.0000E+00	20	.0000E+00	21	.0000E+00	22	.0000E+00	23	.0000E+00	24	.0000E+00

DAY OF WEEK = SUNDAY

1	.0000E+00	2	.0000E+00	3	.0000E+00	4	.0000E+00	5	.0000E+00	6	.0000E+00	7	.0000E+00	8	.0000E+00
9	.0000E+00	10	.0000E+00	11	.0000E+00	12	.0000E+00	13	.0000E+00	14	.0000E+00	15	.0000E+00	16	.0000E+00
17	.0000E+00	18	.0000E+00	19	.0000E+00	20	.0000E+00	21	.0000E+00	22	.0000E+00	23	.0000E+00	24	.0000E+00

```
 *** AERMOD - VERSION 22112  ***   *** C:\Lakes\Project Files\Garvey\Garvey.isc
***        03/04/24
 *** AERMET - VERSION  16216 ***   ***
***        13:00:54

PAGE 170
 *** MODELOPTs:    RegDFAULT  CONC  ELEV  URBAN  ADJ_U*

                   * SOURCE EMISSION RATE SCALARS WHICH VARY DIURNALLY AND BY DAY
OF WEEK (HRDOW) *

 SOURCE ID = L0001946     ; SOURCE TYPE = VOLUME   :
  HOUR   SCALAR   HOUR   SCALAR   HOUR   SCALAR   HOUR   SCALAR   HOUR   SCALAR
HOUR   SCALAR   HOUR   SCALAR   HOUR   SCALAR
 - - - - - - - - - - - - - - - - - - - - - - - - - - - - - - - - - - - - - - - -
- - - - - - - - - - - - - - - - - - - - - - - - - -
                                                DAY OF WEEK = WEEKDAY
    1  .0000E+00    2  .0000E+00    3  .0000E+00    4  .0000E+00    5  .0000E+00
6  .0000E+00    7  .1000E+01    8  .1000E+01
    9  .1000E+01   10  .1000E+01   11  .1000E+01   12  .1000E+01   13  .1000E+01
14  .1000E+01   15  .1000E+01   16  .1000E+01
   17  .0000E+00   18  .0000E+00   19  .0000E+00   20  .0000E+00   21  .0000E+00
22  .0000E+00   23  .0000E+00   24  .0000E+00
                                                DAY OF WEEK = SATURDAY
    1  .0000E+00    2  .0000E+00    3  .0000E+00    4  .0000E+00    5  .0000E+00
6  .0000E+00    7  .0000E+00    8  .0000E+00
    9  .0000E+00   10  .0000E+00   11  .0000E+00   12  .0000E+00   13  .0000E+00
14  .0000E+00   15  .0000E+00   16  .0000E+00
   17  .0000E+00   18  .0000E+00   19  .0000E+00   20  .0000E+00   21  .0000E+00
22  .0000E+00   23  .0000E+00   24  .0000E+00
                                                DAY OF WEEK = SUNDAY
    1  .0000E+00    2  .0000E+00    3  .0000E+00    4  .0000E+00    5  .0000E+00
6  .0000E+00    7  .0000E+00    8  .0000E+00
    9  .0000E+00   10  .0000E+00   11  .0000E+00   12  .0000E+00   13  .0000E+00
14  .0000E+00   15  .0000E+00   16  .0000E+00
   17  .0000E+00   18  .0000E+00   19  .0000E+00   20  .0000E+00   21  .0000E+00
22  .0000E+00   23  .0000E+00   24  .0000E+00
```

```
 *** AERMOD - VERSION 22112  ***   *** C:\Lakes\Project Files\Garvey\Garvey.isc
***        03/04/24
 *** AERMET - VERSION  16216 ***   ***
***        13:00:54

PAGE 171
 *** MODELOPTs:    RegDFAULT  CONC  ELEV  URBAN  ADJ_U*

                   * SOURCE EMISSION RATE SCALARS WHICH VARY DIURNALLY AND BY DAY
OF WEEK (HRDOW) *

 SOURCE ID = L0001947     ; SOURCE TYPE = VOLUME   :
  HOUR   SCALAR   HOUR   SCALAR   HOUR   SCALAR   HOUR   SCALAR   HOUR   SCALAR
HOUR   SCALAR   HOUR   SCALAR   HOUR   SCALAR
 - - - - - - - - - - - - - - - - - - - - - - - - - - - - - - - - - - - - - - - -
- - - - - - - - - - - - - - - - - - - - - - - - - -
                                                DAY OF WEEK = WEEKDAY
    1  .0000E+00    2  .0000E+00    3  .0000E+00    4  .0000E+00    5  .0000E+00
6  .0000E+00    7  .1000E+01    8  .1000E+01
    9  .1000E+01   10  .1000E+01   11  .1000E+01   12  .1000E+01   13  .1000E+01
14  .1000E+01   15  .1000E+01   16  .1000E+01
   17  .0000E+00   18  .0000E+00   19  .0000E+00   20  .0000E+00   21  .0000E+00
22  .0000E+00   23  .0000E+00   24  .0000E+00
                                                DAY OF WEEK = SATURDAY
    1  .0000E+00    2  .0000E+00    3  .0000E+00    4  .0000E+00    5  .0000E+00
6  .0000E+00    7  .0000E+00    8  .0000E+00
    9  .0000E+00   10  .0000E+00   11  .0000E+00   12  .0000E+00   13  .0000E+00
14  .0000E+00   15  .0000E+00   16  .0000E+00
   17  .0000E+00   18  .0000E+00   19  .0000E+00   20  .0000E+00   21  .0000E+00
22  .0000E+00   23  .0000E+00   24  .0000E+00
                                                DAY OF WEEK = SUNDAY
    1  .0000E+00    2  .0000E+00    3  .0000E+00    4  .0000E+00    5  .0000E+00
6  .0000E+00    7  .0000E+00    8  .0000E+00
    9  .0000E+00   10  .0000E+00   11  .0000E+00   12  .0000E+00   13  .0000E+00
14  .0000E+00   15  .0000E+00   16  .0000E+00
   17  .0000E+00   18  .0000E+00   19  .0000E+00   20  .0000E+00   21  .0000E+00
22  .0000E+00   23  .0000E+00   24  .0000E+00
```

```
 *** AERMOD - VERSION 22112  ***   *** C:\Lakes\Project Files\Garvey\Garvey.isc
***        03/04/24
 *** AERMET - VERSION  16216 ***   ***
***        13:00:54

PAGE 172
 *** MODELOPTs:    RegDFAULT  CONC  ELEV  URBAN  ADJ_U*

                   * SOURCE EMISSION RATE SCALARS WHICH VARY DIURNALLY AND BY DAY
OF WEEK (HRDOW) *

 SOURCE ID = L0001948     ; SOURCE TYPE = VOLUME   :
  HOUR   SCALAR   HOUR   SCALAR   HOUR   SCALAR   HOUR   SCALAR   HOUR   SCALAR
HOUR   SCALAR   HOUR   SCALAR   HOUR   SCALAR
 - - - - - - - - - - - - - - - - - - - - - - - - - - - - - - - - - - - - - - - -
- - - - - - - - - - - - - - - - - - - - - - - - -
                                                DAY OF WEEK = WEEKDAY
    1  .0000E+00    2  .0000E+00    3  .0000E+00    4  .0000E+00    5  .0000E+00
6  .0000E+00    7  .1000E+01    8  .1000E+01
    9  .1000E+01   10  .1000E+01   11  .1000E+01   12  .1000E+01   13  .1000E+01
14  .1000E+01   15  .1000E+01   16  .1000E+01
   17  .0000E+00   18  .0000E+00   19  .0000E+00   20  .0000E+00   21  .0000E+00
22  .0000E+00   23  .0000E+00   24  .0000E+00
                                                DAY OF WEEK = SATURDAY
    1  .0000E+00    2  .0000E+00    3  .0000E+00    4  .0000E+00    5  .0000E+00
6  .0000E+00    7  .0000E+00    8  .0000E+00
    9  .0000E+00   10  .0000E+00   11  .0000E+00   12  .0000E+00   13  .0000E+00
14  .0000E+00   15  .0000E+00   16  .0000E+00
   17  .0000E+00   18  .0000E+00   19  .0000E+00   20  .0000E+00   21  .0000E+00
22  .0000E+00   23  .0000E+00   24  .0000E+00
                                                DAY OF WEEK = SUNDAY
    1  .0000E+00    2  .0000E+00    3  .0000E+00    4  .0000E+00    5  .0000E+00
6  .0000E+00    7  .0000E+00    8  .0000E+00
    9  .0000E+00   10  .0000E+00   11  .0000E+00   12  .0000E+00   13  .0000E+00
14  .0000E+00   15  .0000E+00   16  .0000E+00
   17  .0000E+00   18  .0000E+00   19  .0000E+00   20  .0000E+00   21  .0000E+00
22  .0000E+00   23  .0000E+00   24  .0000E+00
```

*** MODELOPTs: RegDFAULT CONC ELEV URBAN ADJ_U*

* SOURCE EMISSION RATE SCALARS WHICH VARY DIURNALLY AND BY DAY OF WEEK (HRDOW) *

SOURCE ID = L0001949 ; SOURCE TYPE = VOLUME :

HOUR	SCALAR	HOUR	SCALAR	HOUR	SCALAR	HOUR	SCALAR	HOUR	SCALAR	HOUR	SCALAR	HOUR	SCALAR	HOUR	SCALAR

DAY OF WEEK = WEEKDAY

1	.0000E+00	2	.0000E+00	3	.0000E+00	4	.0000E+00	5	.0000E+00	6	.0000E+00	7	.1000E+01	8	.1000E+01
9	.1000E+01	10	.1000E+01	11	.1000E+01	12	.1000E+01	13	.1000E+01	14	.1000E+01	15	.1000E+01	16	.1000E+01
17	.0000E+00	18	.0000E+00	19	.0000E+00	20	.0000E+00	21	.0000E+00	22	.0000E+00	23	.0000E+00	24	.0000E+00

DAY OF WEEK = SATURDAY

1	.0000E+00	2	.0000E+00	3	.0000E+00	4	.0000E+00	5	.0000E+00	6	.0000E+00	7	.0000E+00	8	.0000E+00
9	.0000E+00	10	.0000E+00	11	.0000E+00	12	.0000E+00	13	.0000E+00	14	.0000E+00	15	.0000E+00	16	.0000E+00
17	.0000E+00	18	.0000E+00	19	.0000E+00	20	.0000E+00	21	.0000E+00	22	.0000E+00	23	.0000E+00	24	.0000E+00

DAY OF WEEK = SUNDAY

1	.0000E+00	2	.0000E+00	3	.0000E+00	4	.0000E+00	5	.0000E+00	6	.0000E+00	7	.0000E+00	8	.0000E+00
9	.0000E+00	10	.0000E+00	11	.0000E+00	12	.0000E+00	13	.0000E+00	14	.0000E+00	15	.0000E+00	16	.0000E+00
17	.0000E+00	18	.0000E+00	19	.0000E+00	20	.0000E+00	21	.0000E+00	22	.0000E+00	23	.0000E+00	24	.0000E+00

*** MODELOPTs: RegDFAULT CONC ELEV URBAN ADJ_U*

* SOURCE EMISSION RATE SCALARS WHICH VARY DIURNALLY AND BY DAY OF WEEK (HRDOW) *

SOURCE ID = L0001950 ; SOURCE TYPE = VOLUME :

HOUR	SCALAR	HOUR	SCALAR	HOUR	SCALAR	HOUR	SCALAR	HOUR	SCALAR	HOUR	SCALAR	HOUR	SCALAR	HOUR	SCALAR

DAY OF WEEK = WEEKDAY

1	.0000E+00	2	.0000E+00	3	.0000E+00	4	.0000E+00	5	.0000E+00	6	.0000E+00	7	.1000E+01	8	.1000E+01
9	.1000E+01	10	.1000E+01	11	.1000E+01	12	.1000E+01	13	.1000E+01	14	.1000E+01	15	.1000E+01	16	.1000E+01
17	.0000E+00	18	.0000E+00	19	.0000E+00	20	.0000E+00	21	.0000E+00	22	.0000E+00	23	.0000E+00	24	.0000E+00

DAY OF WEEK = SATURDAY

1	.0000E+00	2	.0000E+00	3	.0000E+00	4	.0000E+00	5	.0000E+00	6	.0000E+00	7	.0000E+00	8	.0000E+00
9	.0000E+00	10	.0000E+00	11	.0000E+00	12	.0000E+00	13	.0000E+00	14	.0000E+00	15	.0000E+00	16	.0000E+00
17	.0000E+00	18	.0000E+00	19	.0000E+00	20	.0000E+00	21	.0000E+00	22	.0000E+00	23	.0000E+00	24	.0000E+00

DAY OF WEEK = SUNDAY

1	.0000E+00	2	.0000E+00	3	.0000E+00	4	.0000E+00	5	.0000E+00	6	.0000E+00	7	.0000E+00	8	.0000E+00
9	.0000E+00	10	.0000E+00	11	.0000E+00	12	.0000E+00	13	.0000E+00	14	.0000E+00	15	.0000E+00	16	.0000E+00
17	.0000E+00	18	.0000E+00	19	.0000E+00	20	.0000E+00	21	.0000E+00	22	.0000E+00	23	.0000E+00	24	.0000E+00

```
 *** AERMOD - VERSION 22112  ***   *** C:\Lakes\Project Files\Garvey\Garvey.isc
***        03/04/24
 *** AERMET - VERSION  16216 ***   ***
***        13:00:54

PAGE 175
 *** MODELOPTs:    RegDFAULT  CONC  ELEV  URBAN  ADJ_U*

                   * SOURCE EMISSION RATE SCALARS WHICH VARY DIURNALLY AND BY DAY
OF WEEK (HRDOW) *

 SOURCE ID = L0001951     ; SOURCE TYPE = VOLUME   :
  HOUR   SCALAR   HOUR   SCALAR   HOUR   SCALAR   HOUR   SCALAR   HOUR   SCALAR
HOUR   SCALAR   HOUR   SCALAR   HOUR   SCALAR
 - - - - - - - - - - - - - - - - - - - - - - - - - - - - - - - - - - - - - - - -
- - - - - - - - - - - - - - - - - - - - - - - - - -
                                                DAY OF WEEK = WEEKDAY
    1  .0000E+00    2  .0000E+00    3  .0000E+00    4  .0000E+00    5  .0000E+00
6  .0000E+00    7  .1000E+01    8  .1000E+01
    9  .1000E+01   10  .1000E+01   11  .1000E+01   12  .1000E+01   13  .1000E+01
14  .1000E+01   15  .1000E+01   16  .1000E+01
   17  .0000E+00   18  .0000E+00   19  .0000E+00   20  .0000E+00   21  .0000E+00
22  .0000E+00   23  .0000E+00   24  .0000E+00
                                                DAY OF WEEK = SATURDAY
    1  .0000E+00    2  .0000E+00    3  .0000E+00    4  .0000E+00    5  .0000E+00
6  .0000E+00    7  .0000E+00    8  .0000E+00
    9  .0000E+00   10  .0000E+00   11  .0000E+00   12  .0000E+00   13  .0000E+00
14  .0000E+00   15  .0000E+00   16  .0000E+00
   17  .0000E+00   18  .0000E+00   19  .0000E+00   20  .0000E+00   21  .0000E+00
22  .0000E+00   23  .0000E+00   24  .0000E+00
                                                DAY OF WEEK = SUNDAY
    1  .0000E+00    2  .0000E+00    3  .0000E+00    4  .0000E+00    5  .0000E+00
6  .0000E+00    7  .0000E+00    8  .0000E+00
    9  .0000E+00   10  .0000E+00   11  .0000E+00   12  .0000E+00   13  .0000E+00
14  .0000E+00   15  .0000E+00   16  .0000E+00
   17  .0000E+00   18  .0000E+00   19  .0000E+00   20  .0000E+00   21  .0000E+00
22  .0000E+00   23  .0000E+00   24  .0000E+00
```

*** MODELOPTs: RegDFAULT CONC ELEV URBAN ADJ_U*

* SOURCE EMISSION RATE SCALARS WHICH VARY DIURNALLY AND BY DAY OF WEEK (HRDOW) *

SOURCE ID = L0001952 ; SOURCE TYPE = VOLUME :

HOUR	SCALAR	HOUR	SCALAR	HOUR	SCALAR	HOUR	SCALAR	HOUR	SCALAR	HOUR	SCALAR	HOUR	SCALAR	HOUR	SCALAR

DAY OF WEEK = WEEKDAY

1	.0000E+00	2	.0000E+00	3	.0000E+00	4	.0000E+00	5	.0000E+00	6	.0000E+00	7	.1000E+01	8	.1000E+01
9	.1000E+01	10	.1000E+01	11	.1000E+01	12	.1000E+01	13	.1000E+01	14	.1000E+01	15	.1000E+01	16	.1000E+01
17	.0000E+00	18	.0000E+00	19	.0000E+00	20	.0000E+00	21	.0000E+00	22	.0000E+00	23	.0000E+00	24	.0000E+00

DAY OF WEEK = SATURDAY

1	.0000E+00	2	.0000E+00	3	.0000E+00	4	.0000E+00	5	.0000E+00	6	.0000E+00	7	.0000E+00	8	.0000E+00
9	.0000E+00	10	.0000E+00	11	.0000E+00	12	.0000E+00	13	.0000E+00	14	.0000E+00	15	.0000E+00	16	.0000E+00
17	.0000E+00	18	.0000E+00	19	.0000E+00	20	.0000E+00	21	.0000E+00	22	.0000E+00	23	.0000E+00	24	.0000E+00

DAY OF WEEK = SUNDAY

1	.0000E+00	2	.0000E+00	3	.0000E+00	4	.0000E+00	5	.0000E+00	6	.0000E+00	7	.0000E+00	8	.0000E+00
9	.0000E+00	10	.0000E+00	11	.0000E+00	12	.0000E+00	13	.0000E+00	14	.0000E+00	15	.0000E+00	16	.0000E+00
17	.0000E+00	18	.0000E+00	19	.0000E+00	20	.0000E+00	21	.0000E+00	22	.0000E+00	23	.0000E+00	24	.0000E+00

```
 *** AERMOD - VERSION 22112  ***   *** C:\Lakes\Project Files\Garvey\Garvey.isc
***        03/04/24
 *** AERMET - VERSION  16216 ***   ***
***        13:00:54

PAGE 177
 *** MODELOPTs:    RegDFAULT  CONC  ELEV  URBAN  ADJ_U*

                   * SOURCE EMISSION RATE SCALARS WHICH VARY DIURNALLY AND BY DAY
OF WEEK (HRDOW) *

 SOURCE ID = L0001953     ; SOURCE TYPE = VOLUME   :
  HOUR   SCALAR   HOUR   SCALAR   HOUR   SCALAR   HOUR   SCALAR   HOUR   SCALAR
HOUR   SCALAR   HOUR   SCALAR   HOUR   SCALAR
 - - - - - - - - - - - - - - - - - - - - - - - - - - - - - - - - - - - - - - - -
- - - - - - - - - - - - - - - - - - - - - - - - -
                                                DAY OF WEEK = WEEKDAY
    1  .0000E+00    2  .0000E+00    3  .0000E+00    4  .0000E+00    5  .0000E+00
6  .0000E+00    7  .1000E+01    8  .1000E+01
    9  .1000E+01   10  .1000E+01   11  .1000E+01   12  .1000E+01   13  .1000E+01
14  .1000E+01   15  .1000E+01   16  .1000E+01
   17  .0000E+00   18  .0000E+00   19  .0000E+00   20  .0000E+00   21  .0000E+00
22  .0000E+00   23  .0000E+00   24  .0000E+00
                                                DAY OF WEEK = SATURDAY
    1  .0000E+00    2  .0000E+00    3  .0000E+00    4  .0000E+00    5  .0000E+00
6  .0000E+00    7  .0000E+00    8  .0000E+00
    9  .0000E+00   10  .0000E+00   11  .0000E+00   12  .0000E+00   13  .0000E+00
14  .0000E+00   15  .0000E+00   16  .0000E+00
   17  .0000E+00   18  .0000E+00   19  .0000E+00   20  .0000E+00   21  .0000E+00
22  .0000E+00   23  .0000E+00   24  .0000E+00
                                                DAY OF WEEK = SUNDAY
    1  .0000E+00    2  .0000E+00    3  .0000E+00    4  .0000E+00    5  .0000E+00
6  .0000E+00    7  .0000E+00    8  .0000E+00
    9  .0000E+00   10  .0000E+00   11  .0000E+00   12  .0000E+00   13  .0000E+00
14  .0000E+00   15  .0000E+00   16  .0000E+00
   17  .0000E+00   18  .0000E+00   19  .0000E+00   20  .0000E+00   21  .0000E+00
22  .0000E+00   23  .0000E+00   24  .0000E+00
```

*** MODELOPTs: RegDFAULT CONC ELEV URBAN ADJ_U*

* SOURCE EMISSION RATE SCALARS WHICH VARY DIURNALLY AND BY DAY OF WEEK (HRDOW) *

SOURCE ID = L0001954 ; SOURCE TYPE = VOLUME :

HOUR	SCALAR	HOUR	SCALAR	HOUR	SCALAR	HOUR	SCALAR	HOUR	SCALAR	HOUR	SCALAR	HOUR	SCALAR	HOUR	SCALAR

DAY OF WEEK = WEEKDAY

1	.0000E+00	2	.0000E+00	3	.0000E+00	4	.0000E+00	5	.0000E+00	6	.0000E+00	7	.1000E+01	8	.1000E+01
9	.1000E+01	10	.1000E+01	11	.1000E+01	12	.1000E+01	13	.1000E+01	14	.1000E+01	15	.1000E+01	16	.1000E+01
17	.0000E+00	18	.0000E+00	19	.0000E+00	20	.0000E+00	21	.0000E+00	22	.0000E+00	23	.0000E+00	24	.0000E+00

DAY OF WEEK = SATURDAY

1	.0000E+00	2	.0000E+00	3	.0000E+00	4	.0000E+00	5	.0000E+00	6	.0000E+00	7	.0000E+00	8	.0000E+00
9	.0000E+00	10	.0000E+00	11	.0000E+00	12	.0000E+00	13	.0000E+00	14	.0000E+00	15	.0000E+00	16	.0000E+00
17	.0000E+00	18	.0000E+00	19	.0000E+00	20	.0000E+00	21	.0000E+00	22	.0000E+00	23	.0000E+00	24	.0000E+00

DAY OF WEEK = SUNDAY

1	.0000E+00	2	.0000E+00	3	.0000E+00	4	.0000E+00	5	.0000E+00	6	.0000E+00	7	.0000E+00	8	.0000E+00
9	.0000E+00	10	.0000E+00	11	.0000E+00	12	.0000E+00	13	.0000E+00	14	.0000E+00	15	.0000E+00	16	.0000E+00
17	.0000E+00	18	.0000E+00	19	.0000E+00	20	.0000E+00	21	.0000E+00	22	.0000E+00	23	.0000E+00	24	.0000E+00

*** MODELOPTs: RegDFAULT CONC ELEV URBAN ADJ_U*

* SOURCE EMISSION RATE SCALARS WHICH VARY DIURNALLY AND BY DAY OF WEEK (HRDOW) *

SOURCE ID = L0001955 ; SOURCE TYPE = VOLUME :

HOUR	SCALAR	HOUR	SCALAR	HOUR	SCALAR	HOUR	SCALAR	HOUR	SCALAR	HOUR	SCALAR	HOUR	SCALAR	HOUR	SCALAR

DAY OF WEEK = WEEKDAY

1	.0000E+00	2	.0000E+00	3	.0000E+00	4	.0000E+00	5	.0000E+00	6	.0000E+00	7	.1000E+01	8	.1000E+01
9	.1000E+01	10	.1000E+01	11	.1000E+01	12	.1000E+01	13	.1000E+01	14	.1000E+01	15	.1000E+01	16	.1000E+01
17	.0000E+00	18	.0000E+00	19	.0000E+00	20	.0000E+00	21	.0000E+00	22	.0000E+00	23	.0000E+00	24	.0000E+00

DAY OF WEEK = SATURDAY

1	.0000E+00	2	.0000E+00	3	.0000E+00	4	.0000E+00	5	.0000E+00	6	.0000E+00	7	.0000E+00	8	.0000E+00
9	.0000E+00	10	.0000E+00	11	.0000E+00	12	.0000E+00	13	.0000E+00	14	.0000E+00	15	.0000E+00	16	.0000E+00
17	.0000E+00	18	.0000E+00	19	.0000E+00	20	.0000E+00	21	.0000E+00	22	.0000E+00	23	.0000E+00	24	.0000E+00

DAY OF WEEK = SUNDAY

1	.0000E+00	2	.0000E+00	3	.0000E+00	4	.0000E+00	5	.0000E+00	6	.0000E+00	7	.0000E+00	8	.0000E+00
9	.0000E+00	10	.0000E+00	11	.0000E+00	12	.0000E+00	13	.0000E+00	14	.0000E+00	15	.0000E+00	16	.0000E+00
17	.0000E+00	18	.0000E+00	19	.0000E+00	20	.0000E+00	21	.0000E+00	22	.0000E+00	23	.0000E+00	24	.0000E+00

*** MODELOPTs: RegDFAULT CONC ELEV URBAN ADJ_U*

* SOURCE EMISSION RATE SCALARS WHICH VARY DIURNALLY AND BY DAY OF WEEK (HRDOW) *

SOURCE ID = L0001956 ; SOURCE TYPE = VOLUME :

HOUR	SCALAR	HOUR	SCALAR	HOUR	SCALAR	HOUR	SCALAR	HOUR	SCALAR	HOUR	SCALAR	HOUR	SCALAR	HOUR	SCALAR

DAY OF WEEK = WEEKDAY

1	.0000E+00	2	.0000E+00	3	.0000E+00	4	.0000E+00	5	.0000E+00	6	.0000E+00	7	.1000E+01	8	.1000E+01
9	.1000E+01	10	.1000E+01	11	.1000E+01	12	.1000E+01	13	.1000E+01	14	.1000E+01	15	.1000E+01	16	.1000E+01
17	.0000E+00	18	.0000E+00	19	.0000E+00	20	.0000E+00	21	.0000E+00	22	.0000E+00	23	.0000E+00	24	.0000E+00

DAY OF WEEK = SATURDAY

1	.0000E+00	2	.0000E+00	3	.0000E+00	4	.0000E+00	5	.0000E+00	6	.0000E+00	7	.0000E+00	8	.0000E+00
9	.0000E+00	10	.0000E+00	11	.0000E+00	12	.0000E+00	13	.0000E+00	14	.0000E+00	15	.0000E+00	16	.0000E+00
17	.0000E+00	18	.0000E+00	19	.0000E+00	20	.0000E+00	21	.0000E+00	22	.0000E+00	23	.0000E+00	24	.0000E+00

DAY OF WEEK = SUNDAY

1	.0000E+00	2	.0000E+00	3	.0000E+00	4	.0000E+00	5	.0000E+00	6	.0000E+00	7	.0000E+00	8	.0000E+00
9	.0000E+00	10	.0000E+00	11	.0000E+00	12	.0000E+00	13	.0000E+00	14	.0000E+00	15	.0000E+00	16	.0000E+00
17	.0000E+00	18	.0000E+00	19	.0000E+00	20	.0000E+00	21	.0000E+00	22	.0000E+00	23	.0000E+00	24	.0000E+00

```
 *** AERMOD - VERSION 22112  ***   *** C:\Lakes\Project Files\Garvey\Garvey.isc
***        03/04/24
 *** AERMET - VERSION  16216 ***   ***
***        13:00:54

PAGE 181
 *** MODELOPTs:    RegDFAULT  CONC  ELEV  URBAN  ADJ_U*

                   * SOURCE EMISSION RATE SCALARS WHICH VARY DIURNALLY AND BY DAY
OF WEEK (HRDOW) *

 SOURCE ID = L0001957     ; SOURCE TYPE = VOLUME   :
  HOUR   SCALAR   HOUR   SCALAR   HOUR   SCALAR   HOUR   SCALAR   HOUR   SCALAR
HOUR   SCALAR   HOUR   SCALAR   HOUR   SCALAR
 - - - - - - - - - - - - - - - - - - - - - - - - - - - - - - - - - - - - - - - -
- - - - - - - - - - - - - - - - - - - - - - - - -
                                                DAY OF WEEK = WEEKDAY
    1  .0000E+00    2  .0000E+00    3  .0000E+00    4  .0000E+00    5  .0000E+00
6  .0000E+00    7  .1000E+01    8  .1000E+01
    9  .1000E+01   10  .1000E+01   11  .1000E+01   12  .1000E+01   13  .1000E+01
14  .1000E+01   15  .1000E+01   16  .1000E+01
   17  .0000E+00   18  .0000E+00   19  .0000E+00   20  .0000E+00   21  .0000E+00
22  .0000E+00   23  .0000E+00   24  .0000E+00
                                                DAY OF WEEK = SATURDAY
    1  .0000E+00    2  .0000E+00    3  .0000E+00    4  .0000E+00    5  .0000E+00
6  .0000E+00    7  .0000E+00    8  .0000E+00
    9  .0000E+00   10  .0000E+00   11  .0000E+00   12  .0000E+00   13  .0000E+00
14  .0000E+00   15  .0000E+00   16  .0000E+00
   17  .0000E+00   18  .0000E+00   19  .0000E+00   20  .0000E+00   21  .0000E+00
22  .0000E+00   23  .0000E+00   24  .0000E+00
                                                DAY OF WEEK = SUNDAY
    1  .0000E+00    2  .0000E+00    3  .0000E+00    4  .0000E+00    5  .0000E+00
6  .0000E+00    7  .0000E+00    8  .0000E+00
    9  .0000E+00   10  .0000E+00   11  .0000E+00   12  .0000E+00   13  .0000E+00
14  .0000E+00   15  .0000E+00   16  .0000E+00
   17  .0000E+00   18  .0000E+00   19  .0000E+00   20  .0000E+00   21  .0000E+00
22  .0000E+00   23  .0000E+00   24  .0000E+00
```

```
 *** AERMOD - VERSION 22112  ***   *** C:\Lakes\Project Files\Garvey\Garvey.isc
***        03/04/24
 *** AERMET - VERSION  16216 ***   ***
***        13:00:54

PAGE 182
 *** MODELOPTs:    RegDFAULT  CONC  ELEV  URBAN  ADJ_U*

                   * SOURCE EMISSION RATE SCALARS WHICH VARY DIURNALLY AND BY DAY
OF WEEK (HRDOW) *

 SOURCE ID = L0001958     ; SOURCE TYPE = VOLUME   :
  HOUR   SCALAR   HOUR   SCALAR   HOUR   SCALAR   HOUR   SCALAR   HOUR   SCALAR
HOUR   SCALAR   HOUR   SCALAR   HOUR   SCALAR
 - - - - - - - - - - - - - - - - - - - - - - - - - - - - - - - - - - - - - - - -
- - - - - - - - - - - - - - - - - - - - - - - - -
                                                DAY OF WEEK = WEEKDAY
    1  .0000E+00    2  .0000E+00    3  .0000E+00    4  .0000E+00    5  .0000E+00
6  .0000E+00    7  .1000E+01    8  .1000E+01
    9  .1000E+01   10  .1000E+01   11  .1000E+01   12  .1000E+01   13  .1000E+01
14  .1000E+01   15  .1000E+01   16  .1000E+01
   17  .0000E+00   18  .0000E+00   19  .0000E+00   20  .0000E+00   21  .0000E+00
22  .0000E+00   23  .0000E+00   24  .0000E+00
                                                DAY OF WEEK = SATURDAY
    1  .0000E+00    2  .0000E+00    3  .0000E+00    4  .0000E+00    5  .0000E+00
6  .0000E+00    7  .0000E+00    8  .0000E+00
    9  .0000E+00   10  .0000E+00   11  .0000E+00   12  .0000E+00   13  .0000E+00
14  .0000E+00   15  .0000E+00   16  .0000E+00
   17  .0000E+00   18  .0000E+00   19  .0000E+00   20  .0000E+00   21  .0000E+00
22  .0000E+00   23  .0000E+00   24  .0000E+00
                                                DAY OF WEEK = SUNDAY
    1  .0000E+00    2  .0000E+00    3  .0000E+00    4  .0000E+00    5  .0000E+00
6  .0000E+00    7  .0000E+00    8  .0000E+00
    9  .0000E+00   10  .0000E+00   11  .0000E+00   12  .0000E+00   13  .0000E+00
14  .0000E+00   15  .0000E+00   16  .0000E+00
   17  .0000E+00   18  .0000E+00   19  .0000E+00   20  .0000E+00   21  .0000E+00
22  .0000E+00   23  .0000E+00   24  .0000E+00
```

*** MODELOPTs: RegDFAULT CONC ELEV URBAN ADJ_U*

* SOURCE EMISSION RATE SCALARS WHICH VARY DIURNALLY AND BY DAY OF WEEK (HRDOW) *

SOURCE ID = L0001959 ; SOURCE TYPE = VOLUME :

HOUR	SCALAR	HOUR	SCALAR	HOUR	SCALAR	HOUR	SCALAR	HOUR	SCALAR	HOUR	SCALAR	HOUR	SCALAR	HOUR	SCALAR

DAY OF WEEK = WEEKDAY

1	.0000E+00	2	.0000E+00	3	.0000E+00	4	.0000E+00	5	.0000E+00	6	.0000E+00	7	.1000E+01	8	.1000E+01
9	.1000E+01	10	.1000E+01	11	.1000E+01	12	.1000E+01	13	.1000E+01	14	.1000E+01	15	.1000E+01	16	.1000E+01
17	.0000E+00	18	.0000E+00	19	.0000E+00	20	.0000E+00	21	.0000E+00	22	.0000E+00	23	.0000E+00	24	.0000E+00

DAY OF WEEK = SATURDAY

1	.0000E+00	2	.0000E+00	3	.0000E+00	4	.0000E+00	5	.0000E+00	6	.0000E+00	7	.0000E+00	8	.0000E+00
9	.0000E+00	10	.0000E+00	11	.0000E+00	12	.0000E+00	13	.0000E+00	14	.0000E+00	15	.0000E+00	16	.0000E+00
17	.0000E+00	18	.0000E+00	19	.0000E+00	20	.0000E+00	21	.0000E+00	22	.0000E+00	23	.0000E+00	24	.0000E+00

DAY OF WEEK = SUNDAY

1	.0000E+00	2	.0000E+00	3	.0000E+00	4	.0000E+00	5	.0000E+00	6	.0000E+00	7	.0000E+00	8	.0000E+00
9	.0000E+00	10	.0000E+00	11	.0000E+00	12	.0000E+00	13	.0000E+00	14	.0000E+00	15	.0000E+00	16	.0000E+00
17	.0000E+00	18	.0000E+00	19	.0000E+00	20	.0000E+00	21	.0000E+00	22	.0000E+00	23	.0000E+00	24	.0000E+00

```
 *** AERMOD - VERSION 22112  ***   *** C:\Lakes\Project Files\Garvey\Garvey.isc
***        03/04/24
 *** AERMET - VERSION  16216 ***   ***
***        13:00:54

PAGE 184
 *** MODELOPTs:    RegDFAULT  CONC  ELEV  URBAN  ADJ_U*

                   * SOURCE EMISSION RATE SCALARS WHICH VARY DIURNALLY AND BY DAY
OF WEEK (HRDOW) *

 SOURCE ID = L0001960     ; SOURCE TYPE = VOLUME   :
  HOUR   SCALAR   HOUR   SCALAR   HOUR   SCALAR   HOUR   SCALAR   HOUR   SCALAR
HOUR   SCALAR   HOUR   SCALAR   HOUR   SCALAR
 - - - - - - - - - - - - - - - - - - - - - - - - - - - - - - - - - - - - - - - -
- - - - - - - - - - - - - - - - - - - - - - - - -
                                                DAY OF WEEK = WEEKDAY
    1  .0000E+00    2  .0000E+00    3  .0000E+00    4  .0000E+00    5  .0000E+00
6  .0000E+00    7  .1000E+01    8  .1000E+01
    9  .1000E+01   10  .1000E+01   11  .1000E+01   12  .1000E+01   13  .1000E+01
14  .1000E+01   15  .1000E+01   16  .1000E+01
   17  .0000E+00   18  .0000E+00   19  .0000E+00   20  .0000E+00   21  .0000E+00
22  .0000E+00   23  .0000E+00   24  .0000E+00
                                                DAY OF WEEK = SATURDAY
    1  .0000E+00    2  .0000E+00    3  .0000E+00    4  .0000E+00    5  .0000E+00
6  .0000E+00    7  .0000E+00    8  .0000E+00
    9  .0000E+00   10  .0000E+00   11  .0000E+00   12  .0000E+00   13  .0000E+00
14  .0000E+00   15  .0000E+00   16  .0000E+00
   17  .0000E+00   18  .0000E+00   19  .0000E+00   20  .0000E+00   21  .0000E+00
22  .0000E+00   23  .0000E+00   24  .0000E+00
                                                DAY OF WEEK = SUNDAY
    1  .0000E+00    2  .0000E+00    3  .0000E+00    4  .0000E+00    5  .0000E+00
6  .0000E+00    7  .0000E+00    8  .0000E+00
    9  .0000E+00   10  .0000E+00   11  .0000E+00   12  .0000E+00   13  .0000E+00
14  .0000E+00   15  .0000E+00   16  .0000E+00
   17  .0000E+00   18  .0000E+00   19  .0000E+00   20  .0000E+00   21  .0000E+00
22  .0000E+00   23  .0000E+00   24  .0000E+00
```

```
 *** AERMOD - VERSION 22112  ***   *** C:\Lakes\Project Files\Garvey\Garvey.isc
***        03/04/24
 *** AERMET - VERSION  16216 ***   ***
***        13:00:54

PAGE 185
 *** MODELOPTs:    RegDFAULT  CONC  ELEV  URBAN  ADJ_U*

                   * SOURCE EMISSION RATE SCALARS WHICH VARY DIURNALLY AND BY DAY
OF WEEK (HRDOW) *

 SOURCE ID = L0001961     ; SOURCE TYPE = VOLUME   :
  HOUR   SCALAR   HOUR   SCALAR   HOUR   SCALAR   HOUR   SCALAR   HOUR   SCALAR
HOUR   SCALAR   HOUR   SCALAR   HOUR   SCALAR
 - - - - - - - - - - - - - - - - - - - - - - - - - - - - - - - - - - - - - - - -
- - - - - - - - - - - - - - - - - - - - - - - - -
                                                DAY OF WEEK = WEEKDAY
    1  .0000E+00    2  .0000E+00    3  .0000E+00    4  .0000E+00    5  .0000E+00
6  .0000E+00    7  .1000E+01    8  .1000E+01
    9  .1000E+01   10  .1000E+01   11  .1000E+01   12  .1000E+01   13  .1000E+01
14  .1000E+01   15  .1000E+01   16  .1000E+01
   17  .0000E+00   18  .0000E+00   19  .0000E+00   20  .0000E+00   21  .0000E+00
22  .0000E+00   23  .0000E+00   24  .0000E+00
                                                DAY OF WEEK = SATURDAY
    1  .0000E+00    2  .0000E+00    3  .0000E+00    4  .0000E+00    5  .0000E+00
6  .0000E+00    7  .0000E+00    8  .0000E+00
    9  .0000E+00   10  .0000E+00   11  .0000E+00   12  .0000E+00   13  .0000E+00
14  .0000E+00   15  .0000E+00   16  .0000E+00
   17  .0000E+00   18  .0000E+00   19  .0000E+00   20  .0000E+00   21  .0000E+00
22  .0000E+00   23  .0000E+00   24  .0000E+00
                                                DAY OF WEEK = SUNDAY
    1  .0000E+00    2  .0000E+00    3  .0000E+00    4  .0000E+00    5  .0000E+00
6  .0000E+00    7  .0000E+00    8  .0000E+00
    9  .0000E+00   10  .0000E+00   11  .0000E+00   12  .0000E+00   13  .0000E+00
14  .0000E+00   15  .0000E+00   16  .0000E+00
   17  .0000E+00   18  .0000E+00   19  .0000E+00   20  .0000E+00   21  .0000E+00
22  .0000E+00   23  .0000E+00   24  .0000E+00
```

*** MODELOPTs: RegDFAULT CONC ELEV URBAN ADJ_U*

* SOURCE EMISSION RATE SCALARS WHICH VARY DIURNALLY AND BY DAY OF WEEK (HRDOW) *

SOURCE ID = L0001962 ; SOURCE TYPE = VOLUME :

HOUR	SCALAR	HOUR	SCALAR	HOUR	SCALAR	HOUR	SCALAR	HOUR	SCALAR	HOUR	SCALAR	HOUR	SCALAR	HOUR	SCALAR

DAY OF WEEK = WEEKDAY

1	.0000E+00	2	.0000E+00	3	.0000E+00	4	.0000E+00	5	.0000E+00	6	.0000E+00	7	.1000E+01	8	.1000E+01
9	.1000E+01	10	.1000E+01	11	.1000E+01	12	.1000E+01	13	.1000E+01	14	.1000E+01	15	.1000E+01	16	.1000E+01
17	.0000E+00	18	.0000E+00	19	.0000E+00	20	.0000E+00	21	.0000E+00	22	.0000E+00	23	.0000E+00	24	.0000E+00

DAY OF WEEK = SATURDAY

1	.0000E+00	2	.0000E+00	3	.0000E+00	4	.0000E+00	5	.0000E+00	6	.0000E+00	7	.0000E+00	8	.0000E+00
9	.0000E+00	10	.0000E+00	11	.0000E+00	12	.0000E+00	13	.0000E+00	14	.0000E+00	15	.0000E+00	16	.0000E+00
17	.0000E+00	18	.0000E+00	19	.0000E+00	20	.0000E+00	21	.0000E+00	22	.0000E+00	23	.0000E+00	24	.0000E+00

DAY OF WEEK = SUNDAY

1	.0000E+00	2	.0000E+00	3	.0000E+00	4	.0000E+00	5	.0000E+00	6	.0000E+00	7	.0000E+00	8	.0000E+00
9	.0000E+00	10	.0000E+00	11	.0000E+00	12	.0000E+00	13	.0000E+00	14	.0000E+00	15	.0000E+00	16	.0000E+00
17	.0000E+00	18	.0000E+00	19	.0000E+00	20	.0000E+00	21	.0000E+00	22	.0000E+00	23	.0000E+00	24	.0000E+00

```
 *** AERMOD - VERSION 22112  ***   *** C:\Lakes\Project Files\Garvey\Garvey.isc
***        03/04/24
 *** AERMET - VERSION  16216 ***   ***
***        13:00:54

PAGE 187
 *** MODELOPTs:    RegDFAULT  CONC  ELEV  URBAN  ADJ_U*

                   * SOURCE EMISSION RATE SCALARS WHICH VARY DIURNALLY AND BY DAY
OF WEEK (HRDOW) *

 SOURCE ID = L0001963     ; SOURCE TYPE = VOLUME   :
  HOUR   SCALAR   HOUR   SCALAR   HOUR   SCALAR   HOUR   SCALAR   HOUR   SCALAR
HOUR   SCALAR   HOUR   SCALAR   HOUR   SCALAR
 - - - - - - - - - - - - - - - - - - - - - - - - - - - - - - - - - - - - - - - -
- - - - - - - - - - - - - - - - - - - - - - - - -
                                                DAY OF WEEK = WEEKDAY
    1  .0000E+00    2  .0000E+00    3  .0000E+00    4  .0000E+00    5  .0000E+00
6  .0000E+00    7  .1000E+01    8  .1000E+01
    9  .1000E+01   10  .1000E+01   11  .1000E+01   12  .1000E+01   13  .1000E+01
14  .1000E+01   15  .1000E+01   16  .1000E+01
   17  .0000E+00   18  .0000E+00   19  .0000E+00   20  .0000E+00   21  .0000E+00
22  .0000E+00   23  .0000E+00   24  .0000E+00
                                                DAY OF WEEK = SATURDAY
    1  .0000E+00    2  .0000E+00    3  .0000E+00    4  .0000E+00    5  .0000E+00
6  .0000E+00    7  .0000E+00    8  .0000E+00
    9  .0000E+00   10  .0000E+00   11  .0000E+00   12  .0000E+00   13  .0000E+00
14  .0000E+00   15  .0000E+00   16  .0000E+00
   17  .0000E+00   18  .0000E+00   19  .0000E+00   20  .0000E+00   21  .0000E+00
22  .0000E+00   23  .0000E+00   24  .0000E+00
                                                DAY OF WEEK = SUNDAY
    1  .0000E+00    2  .0000E+00    3  .0000E+00    4  .0000E+00    5  .0000E+00
6  .0000E+00    7  .0000E+00    8  .0000E+00
    9  .0000E+00   10  .0000E+00   11  .0000E+00   12  .0000E+00   13  .0000E+00
14  .0000E+00   15  .0000E+00   16  .0000E+00
   17  .0000E+00   18  .0000E+00   19  .0000E+00   20  .0000E+00   21  .0000E+00
22  .0000E+00   23  .0000E+00   24  .0000E+00
```

```
 *** AERMOD - VERSION 22112  ***   *** C:\Lakes\Project Files\Garvey\Garvey.isc
***        03/04/24
 *** AERMET - VERSION  16216 ***   ***
***        13:00:54

PAGE 188
 *** MODELOPTs:    RegDFAULT  CONC  ELEV  URBAN  ADJ_U*

                   * SOURCE EMISSION RATE SCALARS WHICH VARY DIURNALLY AND BY DAY
OF WEEK (HRDOW) *

 SOURCE ID = L0001964     ; SOURCE TYPE = VOLUME   :
  HOUR   SCALAR   HOUR   SCALAR   HOUR   SCALAR   HOUR   SCALAR   HOUR   SCALAR
HOUR   SCALAR   HOUR   SCALAR   HOUR   SCALAR
 - - - - - - - - - - - - - - - - - - - - - - - - - - - - - - - - - - - - - - - -
- - - - - - - - - - - - - - - - - - - - - - - - -
                                                DAY OF WEEK = WEEKDAY
    1  .0000E+00    2  .0000E+00    3  .0000E+00    4  .0000E+00    5  .0000E+00
6  .0000E+00    7  .1000E+01    8  .1000E+01
    9  .1000E+01   10  .1000E+01   11  .1000E+01   12  .1000E+01   13  .1000E+01
14  .1000E+01   15  .1000E+01   16  .1000E+01
   17  .0000E+00   18  .0000E+00   19  .0000E+00   20  .0000E+00   21  .0000E+00
22  .0000E+00   23  .0000E+00   24  .0000E+00
                                                DAY OF WEEK = SATURDAY
    1  .0000E+00    2  .0000E+00    3  .0000E+00    4  .0000E+00    5  .0000E+00
6  .0000E+00    7  .0000E+00    8  .0000E+00
    9  .0000E+00   10  .0000E+00   11  .0000E+00   12  .0000E+00   13  .0000E+00
14  .0000E+00   15  .0000E+00   16  .0000E+00
   17  .0000E+00   18  .0000E+00   19  .0000E+00   20  .0000E+00   21  .0000E+00
22  .0000E+00   23  .0000E+00   24  .0000E+00
                                                DAY OF WEEK = SUNDAY
    1  .0000E+00    2  .0000E+00    3  .0000E+00    4  .0000E+00    5  .0000E+00
6  .0000E+00    7  .0000E+00    8  .0000E+00
    9  .0000E+00   10  .0000E+00   11  .0000E+00   12  .0000E+00   13  .0000E+00
14  .0000E+00   15  .0000E+00   16  .0000E+00
   17  .0000E+00   18  .0000E+00   19  .0000E+00   20  .0000E+00   21  .0000E+00
22  .0000E+00   23  .0000E+00   24  .0000E+00
```

```
 *** AERMOD - VERSION 22112  ***   *** C:\Lakes\Project Files\Garvey\Garvey.isc
***        03/04/24
 *** AERMET - VERSION  16216 ***   ***
***        13:00:54

PAGE 189
 *** MODELOPTs:    RegDFAULT  CONC  ELEV  URBAN  ADJ_U*

                   * SOURCE EMISSION RATE SCALARS WHICH VARY DIURNALLY AND BY DAY
OF WEEK (HRDOW) *

 SOURCE ID = L0001965     ; SOURCE TYPE = VOLUME   :
  HOUR   SCALAR   HOUR   SCALAR   HOUR   SCALAR   HOUR   SCALAR   HOUR   SCALAR
HOUR   SCALAR   HOUR   SCALAR   HOUR   SCALAR
 - - - - - - - - - - - - - - - - - - - - - - - - - - - - - - - - - - - - - - - -
- - - - - - - - - - - - - - - - - - - - - - - - -
                                                DAY OF WEEK = WEEKDAY
    1  .0000E+00    2  .0000E+00    3  .0000E+00    4  .0000E+00    5  .0000E+00
6  .0000E+00    7  .1000E+01    8  .1000E+01
    9  .1000E+01   10  .1000E+01   11  .1000E+01   12  .1000E+01   13  .1000E+01
14  .1000E+01   15  .1000E+01   16  .1000E+01
   17  .0000E+00   18  .0000E+00   19  .0000E+00   20  .0000E+00   21  .0000E+00
22  .0000E+00   23  .0000E+00   24  .0000E+00
                                                DAY OF WEEK = SATURDAY
    1  .0000E+00    2  .0000E+00    3  .0000E+00    4  .0000E+00    5  .0000E+00
6  .0000E+00    7  .0000E+00    8  .0000E+00
    9  .0000E+00   10  .0000E+00   11  .0000E+00   12  .0000E+00   13  .0000E+00
14  .0000E+00   15  .0000E+00   16  .0000E+00
   17  .0000E+00   18  .0000E+00   19  .0000E+00   20  .0000E+00   21  .0000E+00
22  .0000E+00   23  .0000E+00   24  .0000E+00
                                                DAY OF WEEK = SUNDAY
    1  .0000E+00    2  .0000E+00    3  .0000E+00    4  .0000E+00    5  .0000E+00
6  .0000E+00    7  .0000E+00    8  .0000E+00
    9  .0000E+00   10  .0000E+00   11  .0000E+00   12  .0000E+00   13  .0000E+00
14  .0000E+00   15  .0000E+00   16  .0000E+00
   17  .0000E+00   18  .0000E+00   19  .0000E+00   20  .0000E+00   21  .0000E+00
22  .0000E+00   23  .0000E+00   24  .0000E+00
```

*** MODELOPTs: RegDFAULT CONC ELEV URBAN ADJ_U*

* SOURCE EMISSION RATE SCALARS WHICH VARY DIURNALLY AND BY DAY OF WEEK (HRDOW) *

SOURCE ID = L0001966 ; SOURCE TYPE = VOLUME :

HOUR	SCALAR	HOUR	SCALAR	HOUR	SCALAR	HOUR	SCALAR	HOUR	SCALAR	HOUR	SCALAR	HOUR	SCALAR	HOUR	SCALAR

DAY OF WEEK = WEEKDAY

1	.0000E+00	2	.0000E+00	3	.0000E+00	4	.0000E+00	5	.0000E+00	6	.0000E+00	7	.1000E+01	8	.1000E+01
9	.1000E+01	10	.1000E+01	11	.1000E+01	12	.1000E+01	13	.1000E+01	14	.1000E+01	15	.1000E+01	16	.1000E+01
17	.0000E+00	18	.0000E+00	19	.0000E+00	20	.0000E+00	21	.0000E+00	22	.0000E+00	23	.0000E+00	24	.0000E+00

DAY OF WEEK = SATURDAY

1	.0000E+00	2	.0000E+00	3	.0000E+00	4	.0000E+00	5	.0000E+00	6	.0000E+00	7	.0000E+00	8	.0000E+00
9	.0000E+00	10	.0000E+00	11	.0000E+00	12	.0000E+00	13	.0000E+00	14	.0000E+00	15	.0000E+00	16	.0000E+00
17	.0000E+00	18	.0000E+00	19	.0000E+00	20	.0000E+00	21	.0000E+00	22	.0000E+00	23	.0000E+00	24	.0000E+00

DAY OF WEEK = SUNDAY

1	.0000E+00	2	.0000E+00	3	.0000E+00	4	.0000E+00	5	.0000E+00	6	.0000E+00	7	.0000E+00	8	.0000E+00
9	.0000E+00	10	.0000E+00	11	.0000E+00	12	.0000E+00	13	.0000E+00	14	.0000E+00	15	.0000E+00	16	.0000E+00
17	.0000E+00	18	.0000E+00	19	.0000E+00	20	.0000E+00	21	.0000E+00	22	.0000E+00	23	.0000E+00	24	.0000E+00

```
 *** AERMOD - VERSION 22112  ***   *** C:\Lakes\Project Files\Garvey\Garvey.isc
***        03/04/24
 *** AERMET - VERSION  16216 ***   ***
***        13:00:54

PAGE 191
 *** MODELOPTs:    RegDFAULT  CONC  ELEV  URBAN  ADJ_U*

                   * SOURCE EMISSION RATE SCALARS WHICH VARY DIURNALLY AND BY DAY
OF WEEK (HRDOW) *

 SOURCE ID = L0001967     ; SOURCE TYPE = VOLUME   :
  HOUR   SCALAR   HOUR   SCALAR   HOUR   SCALAR   HOUR   SCALAR   HOUR   SCALAR
HOUR   SCALAR   HOUR   SCALAR   HOUR   SCALAR
 - - - - - - - - - - - - - - - - - - - - - - - - - - - - - - - - - - - - - - - -
- - - - - - - - - - - - - - - - - - - - - - - - -
                                                DAY OF WEEK = WEEKDAY
    1  .0000E+00    2  .0000E+00    3  .0000E+00    4  .0000E+00    5  .0000E+00
6  .0000E+00    7  .1000E+01    8  .1000E+01
    9  .1000E+01   10  .1000E+01   11  .1000E+01   12  .1000E+01   13  .1000E+01
14  .1000E+01   15  .1000E+01   16  .1000E+01
   17  .0000E+00   18  .0000E+00   19  .0000E+00   20  .0000E+00   21  .0000E+00
22  .0000E+00   23  .0000E+00   24  .0000E+00
                                                DAY OF WEEK = SATURDAY
    1  .0000E+00    2  .0000E+00    3  .0000E+00    4  .0000E+00    5  .0000E+00
6  .0000E+00    7  .0000E+00    8  .0000E+00
    9  .0000E+00   10  .0000E+00   11  .0000E+00   12  .0000E+00   13  .0000E+00
14  .0000E+00   15  .0000E+00   16  .0000E+00
   17  .0000E+00   18  .0000E+00   19  .0000E+00   20  .0000E+00   21  .0000E+00
22  .0000E+00   23  .0000E+00   24  .0000E+00
                                                DAY OF WEEK = SUNDAY
    1  .0000E+00    2  .0000E+00    3  .0000E+00    4  .0000E+00    5  .0000E+00
6  .0000E+00    7  .0000E+00    8  .0000E+00
    9  .0000E+00   10  .0000E+00   11  .0000E+00   12  .0000E+00   13  .0000E+00
14  .0000E+00   15  .0000E+00   16  .0000E+00
   17  .0000E+00   18  .0000E+00   19  .0000E+00   20  .0000E+00   21  .0000E+00
22  .0000E+00   23  .0000E+00   24  .0000E+00
```

```
 *** AERMOD - VERSION 22112  ***   *** C:\Lakes\Project Files\Garvey\Garvey.isc
***        03/04/24
 *** AERMET - VERSION  16216 ***   ***
***        13:00:54

PAGE 192
 *** MODELOPTs:    RegDFAULT  CONC  ELEV  URBAN  ADJ_U*

                   * SOURCE EMISSION RATE SCALARS WHICH VARY DIURNALLY AND BY DAY
OF WEEK (HRDOW) *

 SOURCE ID = L0001968     ; SOURCE TYPE = VOLUME   :
  HOUR   SCALAR   HOUR   SCALAR   HOUR   SCALAR   HOUR   SCALAR   HOUR   SCALAR
HOUR   SCALAR   HOUR   SCALAR   HOUR   SCALAR
 - - - - - - - - - - - - - - - - - - - - - - - - - - - - - - - - - - - - - - - -
- - - - - - - - - - - - - - - - - - - - - - - - -
                                                DAY OF WEEK = WEEKDAY
    1  .0000E+00    2  .0000E+00    3  .0000E+00    4  .0000E+00    5  .0000E+00
6  .0000E+00    7  .1000E+01    8  .1000E+01
    9  .1000E+01   10  .1000E+01   11  .1000E+01   12  .1000E+01   13  .1000E+01
14  .1000E+01   15  .1000E+01   16  .1000E+01
   17  .0000E+00   18  .0000E+00   19  .0000E+00   20  .0000E+00   21  .0000E+00
22  .0000E+00   23  .0000E+00   24  .0000E+00
                                                DAY OF WEEK = SATURDAY
    1  .0000E+00    2  .0000E+00    3  .0000E+00    4  .0000E+00    5  .0000E+00
6  .0000E+00    7  .0000E+00    8  .0000E+00
    9  .0000E+00   10  .0000E+00   11  .0000E+00   12  .0000E+00   13  .0000E+00
14  .0000E+00   15  .0000E+00   16  .0000E+00
   17  .0000E+00   18  .0000E+00   19  .0000E+00   20  .0000E+00   21  .0000E+00
22  .0000E+00   23  .0000E+00   24  .0000E+00
                                                DAY OF WEEK = SUNDAY
    1  .0000E+00    2  .0000E+00    3  .0000E+00    4  .0000E+00    5  .0000E+00
6  .0000E+00    7  .0000E+00    8  .0000E+00
    9  .0000E+00   10  .0000E+00   11  .0000E+00   12  .0000E+00   13  .0000E+00
14  .0000E+00   15  .0000E+00   16  .0000E+00
   17  .0000E+00   18  .0000E+00   19  .0000E+00   20  .0000E+00   21  .0000E+00
22  .0000E+00   23  .0000E+00   24  .0000E+00
```

*** MODELOPTs: RegDFAULT CONC ELEV URBAN ADJ_U*

* SOURCE EMISSION RATE SCALARS WHICH VARY DIURNALLY AND BY DAY OF WEEK (HRDOW) *

SOURCE ID = L0001969 ; SOURCE TYPE = VOLUME :

HOUR	SCALAR	HOUR	SCALAR	HOUR	SCALAR	HOUR	SCALAR	HOUR	SCALAR	HOUR	SCALAR	HOUR	SCALAR	HOUR	SCALAR

DAY OF WEEK = WEEKDAY

1	.0000E+00	2	.0000E+00	3	.0000E+00	4	.0000E+00	5	.0000E+00	6	.0000E+00	7	.1000E+01	8	.1000E+01
9	.1000E+01	10	.1000E+01	11	.1000E+01	12	.1000E+01	13	.1000E+01	14	.1000E+01	15	.1000E+01	16	.1000E+01
17	.0000E+00	18	.0000E+00	19	.0000E+00	20	.0000E+00	21	.0000E+00	22	.0000E+00	23	.0000E+00	24	.0000E+00

DAY OF WEEK = SATURDAY

1	.0000E+00	2	.0000E+00	3	.0000E+00	4	.0000E+00	5	.0000E+00	6	.0000E+00	7	.0000E+00	8	.0000E+00
9	.0000E+00	10	.0000E+00	11	.0000E+00	12	.0000E+00	13	.0000E+00	14	.0000E+00	15	.0000E+00	16	.0000E+00
17	.0000E+00	18	.0000E+00	19	.0000E+00	20	.0000E+00	21	.0000E+00	22	.0000E+00	23	.0000E+00	24	.0000E+00

DAY OF WEEK = SUNDAY

1	.0000E+00	2	.0000E+00	3	.0000E+00	4	.0000E+00	5	.0000E+00	6	.0000E+00	7	.0000E+00	8	.0000E+00
9	.0000E+00	10	.0000E+00	11	.0000E+00	12	.0000E+00	13	.0000E+00	14	.0000E+00	15	.0000E+00	16	.0000E+00
17	.0000E+00	18	.0000E+00	19	.0000E+00	20	.0000E+00	21	.0000E+00	22	.0000E+00	23	.0000E+00	24	.0000E+00

*** MODELOPTs: RegDFAULT CONC ELEV URBAN ADJ_U*

* SOURCE EMISSION RATE SCALARS WHICH VARY DIURNALLY AND BY DAY OF WEEK (HRDOW) *

SOURCE ID = L0001970 ; SOURCE TYPE = VOLUME :

HOUR	SCALAR	HOUR	SCALAR	HOUR	SCALAR	HOUR	SCALAR	HOUR	SCALAR	HOUR	SCALAR	HOUR	SCALAR	HOUR	SCALAR

DAY OF WEEK = WEEKDAY

1	.0000E+00	2	.0000E+00	3	.0000E+00	4	.0000E+00	5	.0000E+00	6	.0000E+00	7	.1000E+01	8	.1000E+01
9	.1000E+01	10	.1000E+01	11	.1000E+01	12	.1000E+01	13	.1000E+01	14	.1000E+01	15	.1000E+01	16	.1000E+01
17	.0000E+00	18	.0000E+00	19	.0000E+00	20	.0000E+00	21	.0000E+00	22	.0000E+00	23	.0000E+00	24	.0000E+00

DAY OF WEEK = SATURDAY

1	.0000E+00	2	.0000E+00	3	.0000E+00	4	.0000E+00	5	.0000E+00	6	.0000E+00	7	.0000E+00	8	.0000E+00
9	.0000E+00	10	.0000E+00	11	.0000E+00	12	.0000E+00	13	.0000E+00	14	.0000E+00	15	.0000E+00	16	.0000E+00
17	.0000E+00	18	.0000E+00	19	.0000E+00	20	.0000E+00	21	.0000E+00	22	.0000E+00	23	.0000E+00	24	.0000E+00

DAY OF WEEK = SUNDAY

1	.0000E+00	2	.0000E+00	3	.0000E+00	4	.0000E+00	5	.0000E+00	6	.0000E+00	7	.0000E+00	8	.0000E+00
9	.0000E+00	10	.0000E+00	11	.0000E+00	12	.0000E+00	13	.0000E+00	14	.0000E+00	15	.0000E+00	16	.0000E+00
17	.0000E+00	18	.0000E+00	19	.0000E+00	20	.0000E+00	21	.0000E+00	22	.0000E+00	23	.0000E+00	24	.0000E+00

*** MODELOPTs: RegDFAULT CONC ELEV URBAN ADJ_U*

* SOURCE EMISSION RATE SCALARS WHICH VARY DIURNALLY AND BY DAY OF WEEK (HRDOW) *

SOURCE ID = L0001971 ; SOURCE TYPE = VOLUME :

HOUR	SCALAR	HOUR	SCALAR	HOUR	SCALAR	HOUR	SCALAR	HOUR	SCALAR	HOUR	SCALAR	HOUR	SCALAR	HOUR	SCALAR

DAY OF WEEK = WEEKDAY

1	.0000E+00	2	.0000E+00	3	.0000E+00	4	.0000E+00	5	.0000E+00	6	.0000E+00	7	.1000E+01	8	.1000E+01
9	.1000E+01	10	.1000E+01	11	.1000E+01	12	.1000E+01	13	.1000E+01	14	.1000E+01	15	.1000E+01	16	.1000E+01
17	.0000E+00	18	.0000E+00	19	.0000E+00	20	.0000E+00	21	.0000E+00	22	.0000E+00	23	.0000E+00	24	.0000E+00

DAY OF WEEK = SATURDAY

1	.0000E+00	2	.0000E+00	3	.0000E+00	4	.0000E+00	5	.0000E+00	6	.0000E+00	7	.0000E+00	8	.0000E+00
9	.0000E+00	10	.0000E+00	11	.0000E+00	12	.0000E+00	13	.0000E+00	14	.0000E+00	15	.0000E+00	16	.0000E+00
17	.0000E+00	18	.0000E+00	19	.0000E+00	20	.0000E+00	21	.0000E+00	22	.0000E+00	23	.0000E+00	24	.0000E+00

DAY OF WEEK = SUNDAY

1	.0000E+00	2	.0000E+00	3	.0000E+00	4	.0000E+00	5	.0000E+00	6	.0000E+00	7	.0000E+00	8	.0000E+00
9	.0000E+00	10	.0000E+00	11	.0000E+00	12	.0000E+00	13	.0000E+00	14	.0000E+00	15	.0000E+00	16	.0000E+00
17	.0000E+00	18	.0000E+00	19	.0000E+00	20	.0000E+00	21	.0000E+00	22	.0000E+00	23	.0000E+00	24	.0000E+00

```
 *** AERMOD - VERSION 22112  ***   *** C:\Lakes\Project Files\Garvey\Garvey.isc
***        03/04/24
 *** AERMET - VERSION  16216 ***   ***
***        13:00:54

PAGE 196
 *** MODELOPTs:    RegDFAULT  CONC  ELEV  URBAN  ADJ_U*

                   * SOURCE EMISSION RATE SCALARS WHICH VARY DIURNALLY AND BY DAY
OF WEEK (HRDOW) *

 SOURCE ID = L0001972     ; SOURCE TYPE = VOLUME   :
  HOUR   SCALAR   HOUR   SCALAR   HOUR   SCALAR   HOUR   SCALAR   HOUR   SCALAR
HOUR   SCALAR   HOUR   SCALAR   HOUR   SCALAR
 - - - - - - - - - - - - - - - - - - - - - - - - - - - - - - - - - - - - - - - -
- - - - - - - - - - - - - - - - - - - - - - - - - -
                                                DAY OF WEEK = WEEKDAY
    1  .0000E+00    2  .0000E+00    3  .0000E+00    4  .0000E+00    5  .0000E+00
6  .0000E+00    7  .1000E+01    8  .1000E+01
    9  .1000E+01   10  .1000E+01   11  .1000E+01   12  .1000E+01   13  .1000E+01
14  .1000E+01   15  .1000E+01   16  .1000E+01
   17  .0000E+00   18  .0000E+00   19  .0000E+00   20  .0000E+00   21  .0000E+00
22  .0000E+00   23  .0000E+00   24  .0000E+00
                                                DAY OF WEEK = SATURDAY
    1  .0000E+00    2  .0000E+00    3  .0000E+00    4  .0000E+00    5  .0000E+00
6  .0000E+00    7  .0000E+00    8  .0000E+00
    9  .0000E+00   10  .0000E+00   11  .0000E+00   12  .0000E+00   13  .0000E+00
14  .0000E+00   15  .0000E+00   16  .0000E+00
   17  .0000E+00   18  .0000E+00   19  .0000E+00   20  .0000E+00   21  .0000E+00
22  .0000E+00   23  .0000E+00   24  .0000E+00
                                                DAY OF WEEK = SUNDAY
    1  .0000E+00    2  .0000E+00    3  .0000E+00    4  .0000E+00    5  .0000E+00
6  .0000E+00    7  .0000E+00    8  .0000E+00
    9  .0000E+00   10  .0000E+00   11  .0000E+00   12  .0000E+00   13  .0000E+00
14  .0000E+00   15  .0000E+00   16  .0000E+00
   17  .0000E+00   18  .0000E+00   19  .0000E+00   20  .0000E+00   21  .0000E+00
22  .0000E+00   23  .0000E+00   24  .0000E+00
```

*** MODELOPTs: RegDFAULT CONC ELEV URBAN ADJ_U*

* SOURCE EMISSION RATE SCALARS WHICH VARY DIURNALLY AND BY DAY OF WEEK (HRDOW) *

SOURCE ID = L0001973 ; SOURCE TYPE = VOLUME :

HOUR	SCALAR	HOUR	SCALAR	HOUR	SCALAR	HOUR	SCALAR	HOUR	SCALAR	HOUR	SCALAR	HOUR	SCALAR	HOUR	SCALAR

DAY OF WEEK = WEEKDAY

1	.0000E+00	2	.0000E+00	3	.0000E+00	4	.0000E+00	5	.0000E+00	6	.0000E+00	7	.1000E+01	8	.1000E+01
9	.1000E+01	10	.1000E+01	11	.1000E+01	12	.1000E+01	13	.1000E+01	14	.1000E+01	15	.1000E+01	16	.1000E+01
17	.0000E+00	18	.0000E+00	19	.0000E+00	20	.0000E+00	21	.0000E+00	22	.0000E+00	23	.0000E+00	24	.0000E+00

DAY OF WEEK = SATURDAY

1	.0000E+00	2	.0000E+00	3	.0000E+00	4	.0000E+00	5	.0000E+00	6	.0000E+00	7	.0000E+00	8	.0000E+00
9	.0000E+00	10	.0000E+00	11	.0000E+00	12	.0000E+00	13	.0000E+00	14	.0000E+00	15	.0000E+00	16	.0000E+00
17	.0000E+00	18	.0000E+00	19	.0000E+00	20	.0000E+00	21	.0000E+00	22	.0000E+00	23	.0000E+00	24	.0000E+00

DAY OF WEEK = SUNDAY

1	.0000E+00	2	.0000E+00	3	.0000E+00	4	.0000E+00	5	.0000E+00	6	.0000E+00	7	.0000E+00	8	.0000E+00
9	.0000E+00	10	.0000E+00	11	.0000E+00	12	.0000E+00	13	.0000E+00	14	.0000E+00	15	.0000E+00	16	.0000E+00
17	.0000E+00	18	.0000E+00	19	.0000E+00	20	.0000E+00	21	.0000E+00	22	.0000E+00	23	.0000E+00	24	.0000E+00

```
 *** AERMOD - VERSION 22112  ***   *** C:\Lakes\Project Files\Garvey\Garvey.isc
***        03/04/24
 *** AERMET - VERSION  16216 ***   ***
***        13:00:54

PAGE 198
 *** MODELOPTs:    RegDFAULT  CONC  ELEV  URBAN  ADJ_U*

                   * SOURCE EMISSION RATE SCALARS WHICH VARY DIURNALLY AND BY DAY
OF WEEK (HRDOW) *

 SOURCE ID = L0001974     ; SOURCE TYPE = VOLUME   :
  HOUR   SCALAR   HOUR   SCALAR   HOUR   SCALAR   HOUR   SCALAR   HOUR   SCALAR
HOUR   SCALAR   HOUR   SCALAR   HOUR   SCALAR
 - - - - - - - - - - - - - - - - - - - - - - - - - - - - - - - - - - - - - - - -
- - - - - - - - - - - - - - - - - - - - - - - - -
                                                DAY OF WEEK = WEEKDAY
    1  .0000E+00    2  .0000E+00    3  .0000E+00    4  .0000E+00    5  .0000E+00
6  .0000E+00    7  .1000E+01    8  .1000E+01
    9  .1000E+01   10  .1000E+01   11  .1000E+01   12  .1000E+01   13  .1000E+01
14  .1000E+01   15  .1000E+01   16  .1000E+01
   17  .0000E+00   18  .0000E+00   19  .0000E+00   20  .0000E+00   21  .0000E+00
22  .0000E+00   23  .0000E+00   24  .0000E+00
                                                DAY OF WEEK = SATURDAY
    1  .0000E+00    2  .0000E+00    3  .0000E+00    4  .0000E+00    5  .0000E+00
6  .0000E+00    7  .0000E+00    8  .0000E+00
    9  .0000E+00   10  .0000E+00   11  .0000E+00   12  .0000E+00   13  .0000E+00
14  .0000E+00   15  .0000E+00   16  .0000E+00
   17  .0000E+00   18  .0000E+00   19  .0000E+00   20  .0000E+00   21  .0000E+00
22  .0000E+00   23  .0000E+00   24  .0000E+00
                                                DAY OF WEEK = SUNDAY
    1  .0000E+00    2  .0000E+00    3  .0000E+00    4  .0000E+00    5  .0000E+00
6  .0000E+00    7  .0000E+00    8  .0000E+00
    9  .0000E+00   10  .0000E+00   11  .0000E+00   12  .0000E+00   13  .0000E+00
14  .0000E+00   15  .0000E+00   16  .0000E+00
   17  .0000E+00   18  .0000E+00   19  .0000E+00   20  .0000E+00   21  .0000E+00
22  .0000E+00   23  .0000E+00   24  .0000E+00
```

*** MODELOPTs: RegDFAULT CONC ELEV URBAN ADJ_U*

* SOURCE EMISSION RATE SCALARS WHICH VARY DIURNALLY AND BY DAY OF WEEK (HRDOW) *

SOURCE ID = L0001975 ; SOURCE TYPE = VOLUME :

HOUR	SCALAR	HOUR	SCALAR	HOUR	SCALAR	HOUR	SCALAR	HOUR	SCALAR	HOUR	SCALAR	HOUR	SCALAR	HOUR	SCALAR

DAY OF WEEK = WEEKDAY

1	.0000E+00	2	.0000E+00	3	.0000E+00	4	.0000E+00	5	.0000E+00	6	.0000E+00	7	.1000E+01	8	.1000E+01
9	.1000E+01	10	.1000E+01	11	.1000E+01	12	.1000E+01	13	.1000E+01	14	.1000E+01	15	.1000E+01	16	.1000E+01
17	.0000E+00	18	.0000E+00	19	.0000E+00	20	.0000E+00	21	.0000E+00	22	.0000E+00	23	.0000E+00	24	.0000E+00

DAY OF WEEK = SATURDAY

1	.0000E+00	2	.0000E+00	3	.0000E+00	4	.0000E+00	5	.0000E+00	6	.0000E+00	7	.0000E+00	8	.0000E+00
9	.0000E+00	10	.0000E+00	11	.0000E+00	12	.0000E+00	13	.0000E+00	14	.0000E+00	15	.0000E+00	16	.0000E+00
17	.0000E+00	18	.0000E+00	19	.0000E+00	20	.0000E+00	21	.0000E+00	22	.0000E+00	23	.0000E+00	24	.0000E+00

DAY OF WEEK = SUNDAY

1	.0000E+00	2	.0000E+00	3	.0000E+00	4	.0000E+00	5	.0000E+00	6	.0000E+00	7	.0000E+00	8	.0000E+00
9	.0000E+00	10	.0000E+00	11	.0000E+00	12	.0000E+00	13	.0000E+00	14	.0000E+00	15	.0000E+00	16	.0000E+00
17	.0000E+00	18	.0000E+00	19	.0000E+00	20	.0000E+00	21	.0000E+00	22	.0000E+00	23	.0000E+00	24	.0000E+00

```
 *** AERMOD - VERSION 22112  ***   *** C:\Lakes\Project Files\Garvey\Garvey.isc
***        03/04/24
 *** AERMET - VERSION  16216 ***   ***
***        13:00:54

PAGE 200
 *** MODELOPTs:    RegDFAULT  CONC  ELEV  URBAN  ADJ_U*

                   * SOURCE EMISSION RATE SCALARS WHICH VARY DIURNALLY AND BY DAY
OF WEEK (HRDOW) *

 SOURCE ID = L0001976     ; SOURCE TYPE = VOLUME   :
  HOUR   SCALAR   HOUR   SCALAR   HOUR   SCALAR   HOUR   SCALAR   HOUR   SCALAR
HOUR   SCALAR   HOUR   SCALAR   HOUR   SCALAR
 - - - - - - - - - - - - - - - - - - - - - - - - - - - - - - - - - - - - - - - -
- - - - - - - - - - - - - - - - - - - - - - - - - -
                                                DAY OF WEEK = WEEKDAY
    1  .0000E+00    2  .0000E+00    3  .0000E+00    4  .0000E+00    5  .0000E+00
6  .0000E+00    7  .1000E+01    8  .1000E+01
    9  .1000E+01   10  .1000E+01   11  .1000E+01   12  .1000E+01   13  .1000E+01
14  .1000E+01   15  .1000E+01   16  .1000E+01
   17  .0000E+00   18  .0000E+00   19  .0000E+00   20  .0000E+00   21  .0000E+00
22  .0000E+00   23  .0000E+00   24  .0000E+00
                                                DAY OF WEEK = SATURDAY
    1  .0000E+00    2  .0000E+00    3  .0000E+00    4  .0000E+00    5  .0000E+00
6  .0000E+00    7  .0000E+00    8  .0000E+00
    9  .0000E+00   10  .0000E+00   11  .0000E+00   12  .0000E+00   13  .0000E+00
14  .0000E+00   15  .0000E+00   16  .0000E+00
   17  .0000E+00   18  .0000E+00   19  .0000E+00   20  .0000E+00   21  .0000E+00
22  .0000E+00   23  .0000E+00   24  .0000E+00
                                                DAY OF WEEK = SUNDAY
    1  .0000E+00    2  .0000E+00    3  .0000E+00    4  .0000E+00    5  .0000E+00
6  .0000E+00    7  .0000E+00    8  .0000E+00
    9  .0000E+00   10  .0000E+00   11  .0000E+00   12  .0000E+00   13  .0000E+00
14  .0000E+00   15  .0000E+00   16  .0000E+00
   17  .0000E+00   18  .0000E+00   19  .0000E+00   20  .0000E+00   21  .0000E+00
22  .0000E+00   23  .0000E+00   24  .0000E+00
```

```
 *** AERMOD - VERSION 22112  ***   *** C:\Lakes\Project Files\Garvey\Garvey.isc
***        03/04/24
 *** AERMET - VERSION  16216 ***   ***
***        13:00:54

PAGE 201
 *** MODELOPTs:    RegDFAULT  CONC  ELEV  URBAN  ADJ_U*

                   * SOURCE EMISSION RATE SCALARS WHICH VARY DIURNALLY AND BY DAY
OF WEEK (HRDOW) *

 SOURCE ID = L0001977     ; SOURCE TYPE = VOLUME   :
  HOUR   SCALAR   HOUR   SCALAR   HOUR   SCALAR   HOUR   SCALAR   HOUR   SCALAR
HOUR   SCALAR   HOUR   SCALAR   HOUR   SCALAR
 - - - - - - - - - - - - - - - - - - - - - - - - - - - - - - - - - - - - - - - -
- - - - - - - - - - - - - - - - - - - - - - - - -
                                                DAY OF WEEK = WEEKDAY
    1  .0000E+00    2  .0000E+00    3  .0000E+00    4  .0000E+00    5  .0000E+00
6  .0000E+00    7  .1000E+01    8  .1000E+01
    9  .1000E+01   10  .1000E+01   11  .1000E+01   12  .1000E+01   13  .1000E+01
14  .1000E+01   15  .1000E+01   16  .1000E+01
   17  .0000E+00   18  .0000E+00   19  .0000E+00   20  .0000E+00   21  .0000E+00
22  .0000E+00   23  .0000E+00   24  .0000E+00
                                                DAY OF WEEK = SATURDAY
    1  .0000E+00    2  .0000E+00    3  .0000E+00    4  .0000E+00    5  .0000E+00
6  .0000E+00    7  .0000E+00    8  .0000E+00
    9  .0000E+00   10  .0000E+00   11  .0000E+00   12  .0000E+00   13  .0000E+00
14  .0000E+00   15  .0000E+00   16  .0000E+00
   17  .0000E+00   18  .0000E+00   19  .0000E+00   20  .0000E+00   21  .0000E+00
22  .0000E+00   23  .0000E+00   24  .0000E+00
                                                DAY OF WEEK = SUNDAY
    1  .0000E+00    2  .0000E+00    3  .0000E+00    4  .0000E+00    5  .0000E+00
6  .0000E+00    7  .0000E+00    8  .0000E+00
    9  .0000E+00   10  .0000E+00   11  .0000E+00   12  .0000E+00   13  .0000E+00
14  .0000E+00   15  .0000E+00   16  .0000E+00
   17  .0000E+00   18  .0000E+00   19  .0000E+00   20  .0000E+00   21  .0000E+00
22  .0000E+00   23  .0000E+00   24  .0000E+00
```

```
 *** AERMOD - VERSION 22112  ***   *** C:\Lakes\Project Files\Garvey\Garvey.isc
***        03/04/24
 *** AERMET - VERSION  16216 ***   ***
***        13:00:54

PAGE 202
 *** MODELOPTs:    RegDFAULT  CONC  ELEV  URBAN  ADJ_U*

                   * SOURCE EMISSION RATE SCALARS WHICH VARY DIURNALLY AND BY DAY
OF WEEK (HRDOW) *

 SOURCE ID = L0001978     ; SOURCE TYPE = VOLUME   :
  HOUR   SCALAR   HOUR   SCALAR   HOUR   SCALAR   HOUR   SCALAR   HOUR   SCALAR
HOUR   SCALAR   HOUR   SCALAR   HOUR   SCALAR
 - - - - - - - - - - - - - - - - - - - - - - - - - - - - - - - - - - - - - - - -
- - - - - - - - - - - - - - - - - - - - - - - - - -
                                                DAY OF WEEK = WEEKDAY
    1  .0000E+00    2  .0000E+00    3  .0000E+00    4  .0000E+00    5  .0000E+00
6  .0000E+00    7  .1000E+01    8  .1000E+01
    9  .1000E+01   10  .1000E+01   11  .1000E+01   12  .1000E+01   13  .1000E+01
14  .1000E+01   15  .1000E+01   16  .1000E+01
   17  .0000E+00   18  .0000E+00   19  .0000E+00   20  .0000E+00   21  .0000E+00
22  .0000E+00   23  .0000E+00   24  .0000E+00
                                                DAY OF WEEK = SATURDAY
    1  .0000E+00    2  .0000E+00    3  .0000E+00    4  .0000E+00    5  .0000E+00
6  .0000E+00    7  .0000E+00    8  .0000E+00
    9  .0000E+00   10  .0000E+00   11  .0000E+00   12  .0000E+00   13  .0000E+00
14  .0000E+00   15  .0000E+00   16  .0000E+00
   17  .0000E+00   18  .0000E+00   19  .0000E+00   20  .0000E+00   21  .0000E+00
22  .0000E+00   23  .0000E+00   24  .0000E+00
                                                DAY OF WEEK = SUNDAY
    1  .0000E+00    2  .0000E+00    3  .0000E+00    4  .0000E+00    5  .0000E+00
6  .0000E+00    7  .0000E+00    8  .0000E+00
    9  .0000E+00   10  .0000E+00   11  .0000E+00   12  .0000E+00   13  .0000E+00
14  .0000E+00   15  .0000E+00   16  .0000E+00
   17  .0000E+00   18  .0000E+00   19  .0000E+00   20  .0000E+00   21  .0000E+00
22  .0000E+00   23  .0000E+00   24  .0000E+00
```

```
 *** AERMOD - VERSION 22112  ***   *** C:\Lakes\Project Files\Garvey\Garvey.isc
***        03/04/24
 *** AERMET - VERSION  16216 ***   ***
***        13:00:54

PAGE 203
 *** MODELOPTs:    RegDFAULT  CONC  ELEV  URBAN  ADJ_U*

                   * SOURCE EMISSION RATE SCALARS WHICH VARY DIURNALLY AND BY DAY
OF WEEK (HRDOW) *

 SOURCE ID = L0001979     ; SOURCE TYPE = VOLUME   :
  HOUR   SCALAR   HOUR   SCALAR   HOUR   SCALAR   HOUR   SCALAR   HOUR   SCALAR
HOUR   SCALAR   HOUR   SCALAR   HOUR   SCALAR
 - - - - - - - - - - - - - - - - - - - - - - - - - - - - - - - - - - - - - - - -
- - - - - - - - - - - - - - - - - - - - - - - - -
                                                DAY OF WEEK = WEEKDAY
    1  .0000E+00    2  .0000E+00    3  .0000E+00    4  .0000E+00    5  .0000E+00
6  .0000E+00    7  .1000E+01    8  .1000E+01
    9  .1000E+01   10  .1000E+01   11  .1000E+01   12  .1000E+01   13  .1000E+01
14  .1000E+01   15  .1000E+01   16  .1000E+01
   17  .0000E+00   18  .0000E+00   19  .0000E+00   20  .0000E+00   21  .0000E+00
22  .0000E+00   23  .0000E+00   24  .0000E+00
                                                DAY OF WEEK = SATURDAY
    1  .0000E+00    2  .0000E+00    3  .0000E+00    4  .0000E+00    5  .0000E+00
6  .0000E+00    7  .0000E+00    8  .0000E+00
    9  .0000E+00   10  .0000E+00   11  .0000E+00   12  .0000E+00   13  .0000E+00
14  .0000E+00   15  .0000E+00   16  .0000E+00
   17  .0000E+00   18  .0000E+00   19  .0000E+00   20  .0000E+00   21  .0000E+00
22  .0000E+00   23  .0000E+00   24  .0000E+00
                                                DAY OF WEEK = SUNDAY
    1  .0000E+00    2  .0000E+00    3  .0000E+00    4  .0000E+00    5  .0000E+00
6  .0000E+00    7  .0000E+00    8  .0000E+00
    9  .0000E+00   10  .0000E+00   11  .0000E+00   12  .0000E+00   13  .0000E+00
14  .0000E+00   15  .0000E+00   16  .0000E+00
   17  .0000E+00   18  .0000E+00   19  .0000E+00   20  .0000E+00   21  .0000E+00
22  .0000E+00   23  .0000E+00   24  .0000E+00
```

*** MODELOPTs: RegDFAULT CONC ELEV URBAN ADJ_U*

* SOURCE EMISSION RATE SCALARS WHICH VARY DIURNALLY AND BY DAY OF WEEK (HRDOW) *

SOURCE ID = L0001980 ; SOURCE TYPE = VOLUME :

HOUR	SCALAR	HOUR	SCALAR	HOUR	SCALAR	HOUR	SCALAR	HOUR	SCALAR	HOUR	SCALAR	HOUR	SCALAR	HOUR	SCALAR

DAY OF WEEK = WEEKDAY

1	.0000E+00	2	.0000E+00	3	.0000E+00	4	.0000E+00	5	.0000E+00	6	.0000E+00	7	.1000E+01	8	.1000E+01
9	.1000E+01	10	.1000E+01	11	.1000E+01	12	.1000E+01	13	.1000E+01	14	.1000E+01	15	.1000E+01	16	.1000E+01
17	.0000E+00	18	.0000E+00	19	.0000E+00	20	.0000E+00	21	.0000E+00	22	.0000E+00	23	.0000E+00	24	.0000E+00

DAY OF WEEK = SATURDAY

1	.0000E+00	2	.0000E+00	3	.0000E+00	4	.0000E+00	5	.0000E+00	6	.0000E+00	7	.0000E+00	8	.0000E+00
9	.0000E+00	10	.0000E+00	11	.0000E+00	12	.0000E+00	13	.0000E+00	14	.0000E+00	15	.0000E+00	16	.0000E+00
17	.0000E+00	18	.0000E+00	19	.0000E+00	20	.0000E+00	21	.0000E+00	22	.0000E+00	23	.0000E+00	24	.0000E+00

DAY OF WEEK = SUNDAY

1	.0000E+00	2	.0000E+00	3	.0000E+00	4	.0000E+00	5	.0000E+00	6	.0000E+00	7	.0000E+00	8	.0000E+00
9	.0000E+00	10	.0000E+00	11	.0000E+00	12	.0000E+00	13	.0000E+00	14	.0000E+00	15	.0000E+00	16	.0000E+00
17	.0000E+00	18	.0000E+00	19	.0000E+00	20	.0000E+00	21	.0000E+00	22	.0000E+00	23	.0000E+00	24	.0000E+00

```
 *** AERMOD - VERSION 22112  ***   *** C:\Lakes\Project Files\Garvey\Garvey.isc
***        03/04/24
 *** AERMET - VERSION  16216 ***   ***
***        13:00:54

PAGE 205
 *** MODELOPTs:    RegDFAULT  CONC  ELEV  URBAN  ADJ_U*

                   * SOURCE EMISSION RATE SCALARS WHICH VARY DIURNALLY AND BY DAY
OF WEEK (HRDOW) *

 SOURCE ID = L0001981     ; SOURCE TYPE = VOLUME   :
  HOUR   SCALAR   HOUR   SCALAR   HOUR   SCALAR   HOUR   SCALAR   HOUR   SCALAR
HOUR   SCALAR   HOUR   SCALAR   HOUR   SCALAR
 - - - - - - - - - - - - - - - - - - - - - - - - - - - - - - - - - - - - - - - -
- - - - - - - - - - - - - - - - - - - - - - - - -
                                                DAY OF WEEK = WEEKDAY
    1  .0000E+00    2  .0000E+00    3  .0000E+00    4  .0000E+00    5  .0000E+00
6  .0000E+00    7  .1000E+01    8  .1000E+01
    9  .1000E+01   10  .1000E+01   11  .1000E+01   12  .1000E+01   13  .1000E+01
14  .1000E+01   15  .1000E+01   16  .1000E+01
   17  .0000E+00   18  .0000E+00   19  .0000E+00   20  .0000E+00   21  .0000E+00
22  .0000E+00   23  .0000E+00   24  .0000E+00
                                                DAY OF WEEK = SATURDAY
    1  .0000E+00    2  .0000E+00    3  .0000E+00    4  .0000E+00    5  .0000E+00
6  .0000E+00    7  .0000E+00    8  .0000E+00
    9  .0000E+00   10  .0000E+00   11  .0000E+00   12  .0000E+00   13  .0000E+00
14  .0000E+00   15  .0000E+00   16  .0000E+00
   17  .0000E+00   18  .0000E+00   19  .0000E+00   20  .0000E+00   21  .0000E+00
22  .0000E+00   23  .0000E+00   24  .0000E+00
                                                DAY OF WEEK = SUNDAY
    1  .0000E+00    2  .0000E+00    3  .0000E+00    4  .0000E+00    5  .0000E+00
6  .0000E+00    7  .0000E+00    8  .0000E+00
    9  .0000E+00   10  .0000E+00   11  .0000E+00   12  .0000E+00   13  .0000E+00
14  .0000E+00   15  .0000E+00   16  .0000E+00
   17  .0000E+00   18  .0000E+00   19  .0000E+00   20  .0000E+00   21  .0000E+00
22  .0000E+00   23  .0000E+00   24  .0000E+00
```

*** MODELOPTs: RegDFAULT CONC ELEV URBAN ADJ_U*

* SOURCE EMISSION RATE SCALARS WHICH VARY DIURNALLY AND BY DAY OF WEEK (HRDOW) *

SOURCE ID = L0001982 ; SOURCE TYPE = VOLUME :

HOUR	SCALAR	HOUR	SCALAR	HOUR	SCALAR	HOUR	SCALAR	HOUR	SCALAR	HOUR	SCALAR	HOUR	SCALAR	HOUR	SCALAR

DAY OF WEEK = WEEKDAY

1	.0000E+00	2	.0000E+00	3	.0000E+00	4	.0000E+00	5	.0000E+00	6	.0000E+00	7	.1000E+01	8	.1000E+01
9	.1000E+01	10	.1000E+01	11	.1000E+01	12	.1000E+01	13	.1000E+01	14	.1000E+01	15	.1000E+01	16	.1000E+01
17	.0000E+00	18	.0000E+00	19	.0000E+00	20	.0000E+00	21	.0000E+00	22	.0000E+00	23	.0000E+00	24	.0000E+00

DAY OF WEEK = SATURDAY

1	.0000E+00	2	.0000E+00	3	.0000E+00	4	.0000E+00	5	.0000E+00	6	.0000E+00	7	.0000E+00	8	.0000E+00
9	.0000E+00	10	.0000E+00	11	.0000E+00	12	.0000E+00	13	.0000E+00	14	.0000E+00	15	.0000E+00	16	.0000E+00
17	.0000E+00	18	.0000E+00	19	.0000E+00	20	.0000E+00	21	.0000E+00	22	.0000E+00	23	.0000E+00	24	.0000E+00

DAY OF WEEK = SUNDAY

1	.0000E+00	2	.0000E+00	3	.0000E+00	4	.0000E+00	5	.0000E+00	6	.0000E+00	7	.0000E+00	8	.0000E+00
9	.0000E+00	10	.0000E+00	11	.0000E+00	12	.0000E+00	13	.0000E+00	14	.0000E+00	15	.0000E+00	16	.0000E+00
17	.0000E+00	18	.0000E+00	19	.0000E+00	20	.0000E+00	21	.0000E+00	22	.0000E+00	23	.0000E+00	24	.0000E+00

*** MODELOPTs: RegDFAULT CONC ELEV URBAN ADJ_U*

* SOURCE EMISSION RATE SCALARS WHICH VARY DIURNALLY AND BY DAY OF WEEK (HRDOW) *

SOURCE ID = L0001983 ; SOURCE TYPE = VOLUME :

HOUR	SCALAR	HOUR	SCALAR	HOUR	SCALAR	HOUR	SCALAR	HOUR	SCALAR	HOUR	SCALAR	HOUR	SCALAR	HOUR	SCALAR

DAY OF WEEK = WEEKDAY

1	.0000E+00	2	.0000E+00	3	.0000E+00	4	.0000E+00	5	.0000E+00	6	.0000E+00	7	.1000E+01	8	.1000E+01
9	.1000E+01	10	.1000E+01	11	.1000E+01	12	.1000E+01	13	.1000E+01	14	.1000E+01	15	.1000E+01	16	.1000E+01
17	.0000E+00	18	.0000E+00	19	.0000E+00	20	.0000E+00	21	.0000E+00	22	.0000E+00	23	.0000E+00	24	.0000E+00

DAY OF WEEK = SATURDAY

1	.0000E+00	2	.0000E+00	3	.0000E+00	4	.0000E+00	5	.0000E+00	6	.0000E+00	7	.0000E+00	8	.0000E+00
9	.0000E+00	10	.0000E+00	11	.0000E+00	12	.0000E+00	13	.0000E+00	14	.0000E+00	15	.0000E+00	16	.0000E+00
17	.0000E+00	18	.0000E+00	19	.0000E+00	20	.0000E+00	21	.0000E+00	22	.0000E+00	23	.0000E+00	24	.0000E+00

DAY OF WEEK = SUNDAY

1	.0000E+00	2	.0000E+00	3	.0000E+00	4	.0000E+00	5	.0000E+00	6	.0000E+00	7	.0000E+00	8	.0000E+00
9	.0000E+00	10	.0000E+00	11	.0000E+00	12	.0000E+00	13	.0000E+00	14	.0000E+00	15	.0000E+00	16	.0000E+00
17	.0000E+00	18	.0000E+00	19	.0000E+00	20	.0000E+00	21	.0000E+00	22	.0000E+00	23	.0000E+00	24	.0000E+00

```
 *** AERMOD - VERSION 22112  ***   *** C:\Lakes\Project Files\Garvey\Garvey.isc
***        03/04/24
 *** AERMET - VERSION  16216 ***   ***
***        13:00:54

PAGE 208
 *** MODELOPTs:    RegDFAULT  CONC  ELEV  URBAN  ADJ_U*

                   * SOURCE EMISSION RATE SCALARS WHICH VARY DIURNALLY AND BY DAY
OF WEEK (HRDOW) *

 SOURCE ID = L0001984     ; SOURCE TYPE = VOLUME   :
  HOUR   SCALAR   HOUR   SCALAR   HOUR   SCALAR   HOUR   SCALAR   HOUR   SCALAR
HOUR   SCALAR   HOUR   SCALAR   HOUR   SCALAR
 - - - - - - - - - - - - - - - - - - - - - - - - - - - - - - - - - - - - - - - -
- - - - - - - - - - - - - - - - - - - - - - - - -
                                                DAY OF WEEK = WEEKDAY
    1  .0000E+00    2  .0000E+00    3  .0000E+00    4  .0000E+00    5  .0000E+00
6  .0000E+00    7  .1000E+01    8  .1000E+01
    9  .1000E+01   10  .1000E+01   11  .1000E+01   12  .1000E+01   13  .1000E+01
14  .1000E+01   15  .1000E+01   16  .1000E+01
   17  .0000E+00   18  .0000E+00   19  .0000E+00   20  .0000E+00   21  .0000E+00
22  .0000E+00   23  .0000E+00   24  .0000E+00
                                                DAY OF WEEK = SATURDAY
    1  .0000E+00    2  .0000E+00    3  .0000E+00    4  .0000E+00    5  .0000E+00
6  .0000E+00    7  .0000E+00    8  .0000E+00
    9  .0000E+00   10  .0000E+00   11  .0000E+00   12  .0000E+00   13  .0000E+00
14  .0000E+00   15  .0000E+00   16  .0000E+00
   17  .0000E+00   18  .0000E+00   19  .0000E+00   20  .0000E+00   21  .0000E+00
22  .0000E+00   23  .0000E+00   24  .0000E+00
                                                DAY OF WEEK = SUNDAY
    1  .0000E+00    2  .0000E+00    3  .0000E+00    4  .0000E+00    5  .0000E+00
6  .0000E+00    7  .0000E+00    8  .0000E+00
    9  .0000E+00   10  .0000E+00   11  .0000E+00   12  .0000E+00   13  .0000E+00
14  .0000E+00   15  .0000E+00   16  .0000E+00
   17  .0000E+00   18  .0000E+00   19  .0000E+00   20  .0000E+00   21  .0000E+00
22  .0000E+00   23  .0000E+00   24  .0000E+00
```

*** MODELOPTs: RegDFAULT CONC ELEV URBAN ADJ_U*

* SOURCE EMISSION RATE SCALARS WHICH VARY DIURNALLY AND BY DAY OF WEEK (HRDOW) *

SOURCE ID = L0001985 ; SOURCE TYPE = VOLUME :

HOUR	SCALAR	HOUR	SCALAR	HOUR	SCALAR	HOUR	SCALAR	HOUR	SCALAR	HOUR	SCALAR	HOUR	SCALAR	HOUR	SCALAR

DAY OF WEEK = WEEKDAY

1	.0000E+00	2	.0000E+00	3	.0000E+00	4	.0000E+00	5	.0000E+00	6	.0000E+00	7	.1000E+01	8	.1000E+01
9	.1000E+01	10	.1000E+01	11	.1000E+01	12	.1000E+01	13	.1000E+01	14	.1000E+01	15	.1000E+01	16	.1000E+01
17	.0000E+00	18	.0000E+00	19	.0000E+00	20	.0000E+00	21	.0000E+00	22	.0000E+00	23	.0000E+00	24	.0000E+00

DAY OF WEEK = SATURDAY

1	.0000E+00	2	.0000E+00	3	.0000E+00	4	.0000E+00	5	.0000E+00	6	.0000E+00	7	.0000E+00	8	.0000E+00
9	.0000E+00	10	.0000E+00	11	.0000E+00	12	.0000E+00	13	.0000E+00	14	.0000E+00	15	.0000E+00	16	.0000E+00
17	.0000E+00	18	.0000E+00	19	.0000E+00	20	.0000E+00	21	.0000E+00	22	.0000E+00	23	.0000E+00	24	.0000E+00

DAY OF WEEK = SUNDAY

1	.0000E+00	2	.0000E+00	3	.0000E+00	4	.0000E+00	5	.0000E+00	6	.0000E+00	7	.0000E+00	8	.0000E+00
9	.0000E+00	10	.0000E+00	11	.0000E+00	12	.0000E+00	13	.0000E+00	14	.0000E+00	15	.0000E+00	16	.0000E+00
17	.0000E+00	18	.0000E+00	19	.0000E+00	20	.0000E+00	21	.0000E+00	22	.0000E+00	23	.0000E+00	24	.0000E+00

```
 *** AERMOD - VERSION 22112  ***   *** C:\Lakes\Project Files\Garvey\Garvey.isc
***        03/04/24
 *** AERMET - VERSION  16216 ***   ***
***        13:00:54

PAGE 210
 *** MODELOPTs:    RegDFAULT  CONC  ELEV  URBAN  ADJ_U*

                   * SOURCE EMISSION RATE SCALARS WHICH VARY DIURNALLY AND BY DAY
OF WEEK (HRDOW) *

 SOURCE ID = L0001986     ; SOURCE TYPE = VOLUME   :
  HOUR   SCALAR   HOUR   SCALAR   HOUR   SCALAR   HOUR   SCALAR   HOUR   SCALAR
HOUR   SCALAR   HOUR   SCALAR   HOUR   SCALAR
 - - - - - - - - - - - - - - - - - - - - - - - - - - - - - - - - - - - - - - - -
- - - - - - - - - - - - - - - - - - - - - - - - -
                                                DAY OF WEEK = WEEKDAY
    1  .0000E+00    2  .0000E+00    3  .0000E+00    4  .0000E+00    5  .0000E+00
6  .0000E+00    7  .1000E+01    8  .1000E+01
    9  .1000E+01   10  .1000E+01   11  .1000E+01   12  .1000E+01   13  .1000E+01
14  .1000E+01   15  .1000E+01   16  .1000E+01
   17  .0000E+00   18  .0000E+00   19  .0000E+00   20  .0000E+00   21  .0000E+00
22  .0000E+00   23  .0000E+00   24  .0000E+00
                                                DAY OF WEEK = SATURDAY
    1  .0000E+00    2  .0000E+00    3  .0000E+00    4  .0000E+00    5  .0000E+00
6  .0000E+00    7  .0000E+00    8  .0000E+00
    9  .0000E+00   10  .0000E+00   11  .0000E+00   12  .0000E+00   13  .0000E+00
14  .0000E+00   15  .0000E+00   16  .0000E+00
   17  .0000E+00   18  .0000E+00   19  .0000E+00   20  .0000E+00   21  .0000E+00
22  .0000E+00   23  .0000E+00   24  .0000E+00
                                                DAY OF WEEK = SUNDAY
    1  .0000E+00    2  .0000E+00    3  .0000E+00    4  .0000E+00    5  .0000E+00
6  .0000E+00    7  .0000E+00    8  .0000E+00
    9  .0000E+00   10  .0000E+00   11  .0000E+00   12  .0000E+00   13  .0000E+00
14  .0000E+00   15  .0000E+00   16  .0000E+00
   17  .0000E+00   18  .0000E+00   19  .0000E+00   20  .0000E+00   21  .0000E+00
22  .0000E+00   23  .0000E+00   24  .0000E+00
```

```
 *** AERMOD - VERSION 22112  ***   *** C:\Lakes\Project Files\Garvey\Garvey.isc
***        03/04/24
 *** AERMET - VERSION  16216 ***   ***
***        13:00:54

PAGE 211
 *** MODELOPTs:    RegDFAULT  CONC  ELEV  URBAN  ADJ_U*

                   * SOURCE EMISSION RATE SCALARS WHICH VARY DIURNALLY AND BY DAY
OF WEEK (HRDOW) *

 SOURCE ID = L0001987     ; SOURCE TYPE = VOLUME   :
  HOUR   SCALAR   HOUR   SCALAR   HOUR   SCALAR   HOUR   SCALAR   HOUR   SCALAR
HOUR   SCALAR   HOUR   SCALAR   HOUR   SCALAR
 - - - - - - - - - - - - - - - - - - - - - - - - - - - - - - - - - - - - - - - -
- - - - - - - - - - - - - - - - - - - - - - - - - -
                                                DAY OF WEEK = WEEKDAY
    1  .0000E+00    2  .0000E+00    3  .0000E+00    4  .0000E+00    5  .0000E+00
6  .0000E+00    7  .1000E+01    8  .1000E+01
    9  .1000E+01   10  .1000E+01   11  .1000E+01   12  .1000E+01   13  .1000E+01
14  .1000E+01   15  .1000E+01   16  .1000E+01
   17  .0000E+00   18  .0000E+00   19  .0000E+00   20  .0000E+00   21  .0000E+00
22  .0000E+00   23  .0000E+00   24  .0000E+00
                                                DAY OF WEEK = SATURDAY
    1  .0000E+00    2  .0000E+00    3  .0000E+00    4  .0000E+00    5  .0000E+00
6  .0000E+00    7  .0000E+00    8  .0000E+00
    9  .0000E+00   10  .0000E+00   11  .0000E+00   12  .0000E+00   13  .0000E+00
14  .0000E+00   15  .0000E+00   16  .0000E+00
   17  .0000E+00   18  .0000E+00   19  .0000E+00   20  .0000E+00   21  .0000E+00
22  .0000E+00   23  .0000E+00   24  .0000E+00
                                                DAY OF WEEK = SUNDAY
    1  .0000E+00    2  .0000E+00    3  .0000E+00    4  .0000E+00    5  .0000E+00
6  .0000E+00    7  .0000E+00    8  .0000E+00
    9  .0000E+00   10  .0000E+00   11  .0000E+00   12  .0000E+00   13  .0000E+00
14  .0000E+00   15  .0000E+00   16  .0000E+00
   17  .0000E+00   18  .0000E+00   19  .0000E+00   20  .0000E+00   21  .0000E+00
22  .0000E+00   23  .0000E+00   24  .0000E+00
```

*** MODELOPTs: RegDFAULT CONC ELEV URBAN ADJ_U*

* SOURCE EMISSION RATE SCALARS WHICH VARY DIURNALLY AND BY DAY OF WEEK (HRDOW) *

SOURCE ID = L0001988 ; SOURCE TYPE = VOLUME :

HOUR	SCALAR	HOUR	SCALAR	HOUR	SCALAR	HOUR	SCALAR	HOUR	SCALAR	HOUR	SCALAR	HOUR	SCALAR	HOUR	SCALAR

DAY OF WEEK = WEEKDAY

1	.0000E+00	2	.0000E+00	3	.0000E+00	4	.0000E+00	5	.0000E+00	6	.0000E+00	7	.1000E+01	8	.1000E+01
9	.1000E+01	10	.1000E+01	11	.1000E+01	12	.1000E+01	13	.1000E+01	14	.1000E+01	15	.1000E+01	16	.1000E+01
17	.0000E+00	18	.0000E+00	19	.0000E+00	20	.0000E+00	21	.0000E+00	22	.0000E+00	23	.0000E+00	24	.0000E+00

DAY OF WEEK = SATURDAY

1	.0000E+00	2	.0000E+00	3	.0000E+00	4	.0000E+00	5	.0000E+00	6	.0000E+00	7	.0000E+00	8	.0000E+00
9	.0000E+00	10	.0000E+00	11	.0000E+00	12	.0000E+00	13	.0000E+00	14	.0000E+00	15	.0000E+00	16	.0000E+00
17	.0000E+00	18	.0000E+00	19	.0000E+00	20	.0000E+00	21	.0000E+00	22	.0000E+00	23	.0000E+00	24	.0000E+00

DAY OF WEEK = SUNDAY

1	.0000E+00	2	.0000E+00	3	.0000E+00	4	.0000E+00	5	.0000E+00	6	.0000E+00	7	.0000E+00	8	.0000E+00
9	.0000E+00	10	.0000E+00	11	.0000E+00	12	.0000E+00	13	.0000E+00	14	.0000E+00	15	.0000E+00	16	.0000E+00
17	.0000E+00	18	.0000E+00	19	.0000E+00	20	.0000E+00	21	.0000E+00	22	.0000E+00	23	.0000E+00	24	.0000E+00

*** MODELOPTs: RegDFAULT CONC ELEV URBAN ADJ_U*

* SOURCE EMISSION RATE SCALARS WHICH VARY DIURNALLY AND BY DAY OF WEEK (HRDOW) *

SOURCE ID = L0001989 ; SOURCE TYPE = VOLUME :

HOUR	SCALAR	HOUR	SCALAR	HOUR	SCALAR	HOUR	SCALAR	HOUR	SCALAR	HOUR	SCALAR	HOUR	SCALAR	HOUR	SCALAR

DAY OF WEEK = WEEKDAY

1	.0000E+00	2	.0000E+00	3	.0000E+00	4	.0000E+00	5	.0000E+00	6	.0000E+00	7	.1000E+01	8	.1000E+01
9	.1000E+01	10	.1000E+01	11	.1000E+01	12	.1000E+01	13	.1000E+01	14	.1000E+01	15	.1000E+01	16	.1000E+01
17	.0000E+00	18	.0000E+00	19	.0000E+00	20	.0000E+00	21	.0000E+00	22	.0000E+00	23	.0000E+00	24	.0000E+00

DAY OF WEEK = SATURDAY

1	.0000E+00	2	.0000E+00	3	.0000E+00	4	.0000E+00	5	.0000E+00	6	.0000E+00	7	.0000E+00	8	.0000E+00
9	.0000E+00	10	.0000E+00	11	.0000E+00	12	.0000E+00	13	.0000E+00	14	.0000E+00	15	.0000E+00	16	.0000E+00
17	.0000E+00	18	.0000E+00	19	.0000E+00	20	.0000E+00	21	.0000E+00	22	.0000E+00	23	.0000E+00	24	.0000E+00

DAY OF WEEK = SUNDAY

1	.0000E+00	2	.0000E+00	3	.0000E+00	4	.0000E+00	5	.0000E+00	6	.0000E+00	7	.0000E+00	8	.0000E+00
9	.0000E+00	10	.0000E+00	11	.0000E+00	12	.0000E+00	13	.0000E+00	14	.0000E+00	15	.0000E+00	16	.0000E+00
17	.0000E+00	18	.0000E+00	19	.0000E+00	20	.0000E+00	21	.0000E+00	22	.0000E+00	23	.0000E+00	24	.0000E+00

```
 *** AERMOD - VERSION 22112  ***   *** C:\Lakes\Project Files\Garvey\Garvey.isc
***        03/04/24
 *** AERMET - VERSION  16216 ***   ***
***        13:00:54

PAGE 214
 *** MODELOPTs:    RegDFAULT  CONC  ELEV  URBAN  ADJ_U*

                   * SOURCE EMISSION RATE SCALARS WHICH VARY DIURNALLY AND BY DAY
OF WEEK (HRDOW) *

 SOURCE ID = L0001990     ; SOURCE TYPE = VOLUME   :
  HOUR   SCALAR   HOUR   SCALAR   HOUR   SCALAR   HOUR   SCALAR   HOUR   SCALAR
HOUR   SCALAR   HOUR   SCALAR   HOUR   SCALAR
 - - - - - - - - - - - - - - - - - - - - - - - - - - - - - - - - - - - - - - - -
- - - - - - - - - - - - - - - - - - - - - - - - -
                                                DAY OF WEEK = WEEKDAY
    1  .0000E+00    2  .0000E+00    3  .0000E+00    4  .0000E+00    5  .0000E+00
6  .0000E+00    7  .1000E+01    8  .1000E+01
    9  .1000E+01   10  .1000E+01   11  .1000E+01   12  .1000E+01   13  .1000E+01
14  .1000E+01   15  .1000E+01   16  .1000E+01
   17  .0000E+00   18  .0000E+00   19  .0000E+00   20  .0000E+00   21  .0000E+00
22  .0000E+00   23  .0000E+00   24  .0000E+00
                                                DAY OF WEEK = SATURDAY
    1  .0000E+00    2  .0000E+00    3  .0000E+00    4  .0000E+00    5  .0000E+00
6  .0000E+00    7  .0000E+00    8  .0000E+00
    9  .0000E+00   10  .0000E+00   11  .0000E+00   12  .0000E+00   13  .0000E+00
14  .0000E+00   15  .0000E+00   16  .0000E+00
   17  .0000E+00   18  .0000E+00   19  .0000E+00   20  .0000E+00   21  .0000E+00
22  .0000E+00   23  .0000E+00   24  .0000E+00
                                                DAY OF WEEK = SUNDAY
    1  .0000E+00    2  .0000E+00    3  .0000E+00    4  .0000E+00    5  .0000E+00
6  .0000E+00    7  .0000E+00    8  .0000E+00
    9  .0000E+00   10  .0000E+00   11  .0000E+00   12  .0000E+00   13  .0000E+00
14  .0000E+00   15  .0000E+00   16  .0000E+00
   17  .0000E+00   18  .0000E+00   19  .0000E+00   20  .0000E+00   21  .0000E+00
22  .0000E+00   23  .0000E+00   24  .0000E+00
```

```
 *** AERMOD - VERSION 22112  ***   *** C:\Lakes\Project Files\Garvey\Garvey.isc
***        03/04/24
 *** AERMET - VERSION  16216 ***   ***
***        13:00:54

PAGE 215
 *** MODELOPTs:    RegDFAULT  CONC  ELEV  URBAN  ADJ_U*

                   * SOURCE EMISSION RATE SCALARS WHICH VARY DIURNALLY AND BY DAY
OF WEEK (HRDOW) *

 SOURCE ID = L0001991     ; SOURCE TYPE = VOLUME   :
  HOUR   SCALAR   HOUR   SCALAR   HOUR   SCALAR   HOUR   SCALAR   HOUR   SCALAR
HOUR   SCALAR   HOUR   SCALAR   HOUR   SCALAR
 - - - - - - - - - - - - - - - - - - - - - - - - - - - - - - - - - - - - - - - -
- - - - - - - - - - - - - - - - - - - - - - - - -
                                                DAY OF WEEK = WEEKDAY
    1  .0000E+00    2  .0000E+00    3  .0000E+00    4  .0000E+00    5  .0000E+00
6  .0000E+00    7  .1000E+01    8  .1000E+01
    9  .1000E+01   10  .1000E+01   11  .1000E+01   12  .1000E+01   13  .1000E+01
14  .1000E+01   15  .1000E+01   16  .1000E+01
   17  .0000E+00   18  .0000E+00   19  .0000E+00   20  .0000E+00   21  .0000E+00
22  .0000E+00   23  .0000E+00   24  .0000E+00
                                                DAY OF WEEK = SATURDAY
    1  .0000E+00    2  .0000E+00    3  .0000E+00    4  .0000E+00    5  .0000E+00
6  .0000E+00    7  .0000E+00    8  .0000E+00
    9  .0000E+00   10  .0000E+00   11  .0000E+00   12  .0000E+00   13  .0000E+00
14  .0000E+00   15  .0000E+00   16  .0000E+00
   17  .0000E+00   18  .0000E+00   19  .0000E+00   20  .0000E+00   21  .0000E+00
22  .0000E+00   23  .0000E+00   24  .0000E+00
                                                DAY OF WEEK = SUNDAY
    1  .0000E+00    2  .0000E+00    3  .0000E+00    4  .0000E+00    5  .0000E+00
6  .0000E+00    7  .0000E+00    8  .0000E+00
    9  .0000E+00   10  .0000E+00   11  .0000E+00   12  .0000E+00   13  .0000E+00
14  .0000E+00   15  .0000E+00   16  .0000E+00
   17  .0000E+00   18  .0000E+00   19  .0000E+00   20  .0000E+00   21  .0000E+00
22  .0000E+00   23  .0000E+00   24  .0000E+00
```

*** MODELOPTs: RegDFAULT CONC ELEV URBAN ADJ_U*

* SOURCE EMISSION RATE SCALARS WHICH VARY DIURNALLY AND BY DAY OF WEEK (HRDOW) *

SOURCE ID = L0001992 ; SOURCE TYPE = VOLUME :

HOUR	SCALAR	HOUR	SCALAR	HOUR	SCALAR	HOUR	SCALAR	HOUR	SCALAR	HOUR	SCALAR	HOUR	SCALAR	HOUR	SCALAR

DAY OF WEEK = WEEKDAY

1	.0000E+00	2	.0000E+00	3	.0000E+00	4	.0000E+00	5	.0000E+00	6	.0000E+00	7	.1000E+01	8	.1000E+01
9	.1000E+01	10	.1000E+01	11	.1000E+01	12	.1000E+01	13	.1000E+01	14	.1000E+01	15	.1000E+01	16	.1000E+01
17	.0000E+00	18	.0000E+00	19	.0000E+00	20	.0000E+00	21	.0000E+00	22	.0000E+00	23	.0000E+00	24	.0000E+00

DAY OF WEEK = SATURDAY

1	.0000E+00	2	.0000E+00	3	.0000E+00	4	.0000E+00	5	.0000E+00	6	.0000E+00	7	.0000E+00	8	.0000E+00
9	.0000E+00	10	.0000E+00	11	.0000E+00	12	.0000E+00	13	.0000E+00	14	.0000E+00	15	.0000E+00	16	.0000E+00
17	.0000E+00	18	.0000E+00	19	.0000E+00	20	.0000E+00	21	.0000E+00	22	.0000E+00	23	.0000E+00	24	.0000E+00

DAY OF WEEK = SUNDAY

1	.0000E+00	2	.0000E+00	3	.0000E+00	4	.0000E+00	5	.0000E+00	6	.0000E+00	7	.0000E+00	8	.0000E+00
9	.0000E+00	10	.0000E+00	11	.0000E+00	12	.0000E+00	13	.0000E+00	14	.0000E+00	15	.0000E+00	16	.0000E+00
17	.0000E+00	18	.0000E+00	19	.0000E+00	20	.0000E+00	21	.0000E+00	22	.0000E+00	23	.0000E+00	24	.0000E+00

```
 *** AERMOD - VERSION 22112  ***   *** C:\Lakes\Project Files\Garvey\Garvey.isc
***        03/04/24
 *** AERMET - VERSION  16216 ***   ***
***        13:00:54

PAGE 217
 *** MODELOPTs:    RegDFAULT  CONC  ELEV  URBAN  ADJ_U*

                   * SOURCE EMISSION RATE SCALARS WHICH VARY DIURNALLY AND BY DAY
OF WEEK (HRDOW) *

 SOURCE ID = L0001993     ; SOURCE TYPE = VOLUME   :
  HOUR   SCALAR   HOUR   SCALAR   HOUR   SCALAR   HOUR   SCALAR   HOUR   SCALAR
HOUR   SCALAR   HOUR   SCALAR   HOUR   SCALAR
 - - - - - - - - - - - - - - - - - - - - - - - - - - - - - - - - - - - - - - - -
- - - - - - - - - - - - - - - - - - - - - - - - -
                                                DAY OF WEEK = WEEKDAY
    1  .0000E+00    2  .0000E+00    3  .0000E+00    4  .0000E+00    5  .0000E+00
6  .0000E+00    7  .1000E+01    8  .1000E+01
    9  .1000E+01   10  .1000E+01   11  .1000E+01   12  .1000E+01   13  .1000E+01
14  .1000E+01   15  .1000E+01   16  .1000E+01
   17  .0000E+00   18  .0000E+00   19  .0000E+00   20  .0000E+00   21  .0000E+00
22  .0000E+00   23  .0000E+00   24  .0000E+00
                                                DAY OF WEEK = SATURDAY
    1  .0000E+00    2  .0000E+00    3  .0000E+00    4  .0000E+00    5  .0000E+00
6  .0000E+00    7  .0000E+00    8  .0000E+00
    9  .0000E+00   10  .0000E+00   11  .0000E+00   12  .0000E+00   13  .0000E+00
14  .0000E+00   15  .0000E+00   16  .0000E+00
   17  .0000E+00   18  .0000E+00   19  .0000E+00   20  .0000E+00   21  .0000E+00
22  .0000E+00   23  .0000E+00   24  .0000E+00
                                                DAY OF WEEK = SUNDAY
    1  .0000E+00    2  .0000E+00    3  .0000E+00    4  .0000E+00    5  .0000E+00
6  .0000E+00    7  .0000E+00    8  .0000E+00
    9  .0000E+00   10  .0000E+00   11  .0000E+00   12  .0000E+00   13  .0000E+00
14  .0000E+00   15  .0000E+00   16  .0000E+00
   17  .0000E+00   18  .0000E+00   19  .0000E+00   20  .0000E+00   21  .0000E+00
22  .0000E+00   23  .0000E+00   24  .0000E+00
```

```
 *** AERMOD - VERSION 22112  ***   *** C:\Lakes\Project Files\Garvey\Garvey.isc
***        03/04/24
 *** AERMET - VERSION  16216 ***   ***
***        13:00:54

PAGE 218
 *** MODELOPTs:    RegDFAULT  CONC  ELEV  URBAN  ADJ_U*

                   * SOURCE EMISSION RATE SCALARS WHICH VARY DIURNALLY AND BY DAY
OF WEEK (HRDOW) *

 SOURCE ID = L0001994     ; SOURCE TYPE = VOLUME   :
  HOUR   SCALAR   HOUR   SCALAR   HOUR   SCALAR   HOUR   SCALAR   HOUR   SCALAR
HOUR   SCALAR   HOUR   SCALAR   HOUR   SCALAR
 - - - - - - - - - - - - - - - - - - - - - - - - - - - - - - - - - - - - - - - -
- - - - - - - - - - - - - - - - - - - - - - - - -
                                                DAY OF WEEK = WEEKDAY
    1  .0000E+00    2  .0000E+00    3  .0000E+00    4  .0000E+00    5  .0000E+00
6  .0000E+00    7  .1000E+01    8  .1000E+01
    9  .1000E+01   10  .1000E+01   11  .1000E+01   12  .1000E+01   13  .1000E+01
14  .1000E+01   15  .1000E+01   16  .1000E+01
   17  .0000E+00   18  .0000E+00   19  .0000E+00   20  .0000E+00   21  .0000E+00
22  .0000E+00   23  .0000E+00   24  .0000E+00
                                                DAY OF WEEK = SATURDAY
    1  .0000E+00    2  .0000E+00    3  .0000E+00    4  .0000E+00    5  .0000E+00
6  .0000E+00    7  .0000E+00    8  .0000E+00
    9  .0000E+00   10  .0000E+00   11  .0000E+00   12  .0000E+00   13  .0000E+00
14  .0000E+00   15  .0000E+00   16  .0000E+00
   17  .0000E+00   18  .0000E+00   19  .0000E+00   20  .0000E+00   21  .0000E+00
22  .0000E+00   23  .0000E+00   24  .0000E+00
                                                DAY OF WEEK = SUNDAY
    1  .0000E+00    2  .0000E+00    3  .0000E+00    4  .0000E+00    5  .0000E+00
6  .0000E+00    7  .0000E+00    8  .0000E+00
    9  .0000E+00   10  .0000E+00   11  .0000E+00   12  .0000E+00   13  .0000E+00
14  .0000E+00   15  .0000E+00   16  .0000E+00
   17  .0000E+00   18  .0000E+00   19  .0000E+00   20  .0000E+00   21  .0000E+00
22  .0000E+00   23  .0000E+00   24  .0000E+00
```

*** MODELOPTs: RegDFAULT CONC ELEV URBAN ADJ_U*

* SOURCE EMISSION RATE SCALARS WHICH VARY DIURNALLY AND BY DAY OF WEEK (HRDOW) *

SOURCE ID = L0001995 ; SOURCE TYPE = VOLUME :

HOUR	SCALAR	HOUR	SCALAR	HOUR	SCALAR	HOUR	SCALAR	HOUR	SCALAR	HOUR	SCALAR	HOUR	SCALAR	HOUR	SCALAR

DAY OF WEEK = WEEKDAY

1	.0000E+00	2	.0000E+00	3	.0000E+00	4	.0000E+00	5	.0000E+00	6	.0000E+00	7	.1000E+01	8	.1000E+01
9	.1000E+01	10	.1000E+01	11	.1000E+01	12	.1000E+01	13	.1000E+01	14	.1000E+01	15	.1000E+01	16	.1000E+01
17	.0000E+00	18	.0000E+00	19	.0000E+00	20	.0000E+00	21	.0000E+00	22	.0000E+00	23	.0000E+00	24	.0000E+00

DAY OF WEEK = SATURDAY

1	.0000E+00	2	.0000E+00	3	.0000E+00	4	.0000E+00	5	.0000E+00	6	.0000E+00	7	.0000E+00	8	.0000E+00
9	.0000E+00	10	.0000E+00	11	.0000E+00	12	.0000E+00	13	.0000E+00	14	.0000E+00	15	.0000E+00	16	.0000E+00
17	.0000E+00	18	.0000E+00	19	.0000E+00	20	.0000E+00	21	.0000E+00	22	.0000E+00	23	.0000E+00	24	.0000E+00

DAY OF WEEK = SUNDAY

1	.0000E+00	2	.0000E+00	3	.0000E+00	4	.0000E+00	5	.0000E+00	6	.0000E+00	7	.0000E+00	8	.0000E+00
9	.0000E+00	10	.0000E+00	11	.0000E+00	12	.0000E+00	13	.0000E+00	14	.0000E+00	15	.0000E+00	16	.0000E+00
17	.0000E+00	18	.0000E+00	19	.0000E+00	20	.0000E+00	21	.0000E+00	22	.0000E+00	23	.0000E+00	24	.0000E+00

*** MODELOPTs: RegDFAULT CONC ELEV URBAN ADJ_U*

* SOURCE EMISSION RATE SCALARS WHICH VARY DIURNALLY AND BY DAY OF WEEK (HRDOW) *

SOURCE ID = L0001996 ; SOURCE TYPE = VOLUME :

HOUR	SCALAR	HOUR	SCALAR	HOUR	SCALAR	HOUR	SCALAR	HOUR	SCALAR	HOUR	SCALAR	HOUR	SCALAR	HOUR	SCALAR

DAY OF WEEK = WEEKDAY

1	.0000E+00	2	.0000E+00	3	.0000E+00	4	.0000E+00	5	.0000E+00	6	.0000E+00	7	.1000E+01	8	.1000E+01
9	.1000E+01	10	.1000E+01	11	.1000E+01	12	.1000E+01	13	.1000E+01	14	.1000E+01	15	.1000E+01	16	.1000E+01
17	.0000E+00	18	.0000E+00	19	.0000E+00	20	.0000E+00	21	.0000E+00	22	.0000E+00	23	.0000E+00	24	.0000E+00

DAY OF WEEK = SATURDAY

1	.0000E+00	2	.0000E+00	3	.0000E+00	4	.0000E+00	5	.0000E+00	6	.0000E+00	7	.0000E+00	8	.0000E+00
9	.0000E+00	10	.0000E+00	11	.0000E+00	12	.0000E+00	13	.0000E+00	14	.0000E+00	15	.0000E+00	16	.0000E+00
17	.0000E+00	18	.0000E+00	19	.0000E+00	20	.0000E+00	21	.0000E+00	22	.0000E+00	23	.0000E+00	24	.0000E+00

DAY OF WEEK = SUNDAY

1	.0000E+00	2	.0000E+00	3	.0000E+00	4	.0000E+00	5	.0000E+00	6	.0000E+00	7	.0000E+00	8	.0000E+00
9	.0000E+00	10	.0000E+00	11	.0000E+00	12	.0000E+00	13	.0000E+00	14	.0000E+00	15	.0000E+00	16	.0000E+00
17	.0000E+00	18	.0000E+00	19	.0000E+00	20	.0000E+00	21	.0000E+00	22	.0000E+00	23	.0000E+00	24	.0000E+00

*** MODELOPTs: RegDFAULT CONC ELEV URBAN ADJ_U*

* SOURCE EMISSION RATE SCALARS WHICH VARY DIURNALLY AND BY DAY OF WEEK (HRDOW) *

SOURCE ID = L0001997 ; SOURCE TYPE = VOLUME :

HOUR	SCALAR	HOUR	SCALAR	HOUR	SCALAR	HOUR	SCALAR	HOUR	SCALAR	HOUR	SCALAR	HOUR	SCALAR	HOUR	SCALAR

DAY OF WEEK = WEEKDAY

1	.0000E+00	2	.0000E+00	3	.0000E+00	4	.0000E+00	5	.0000E+00	6	.0000E+00	7	.1000E+01	8	.1000E+01
9	.1000E+01	10	.1000E+01	11	.1000E+01	12	.1000E+01	13	.1000E+01	14	.1000E+01	15	.1000E+01	16	.1000E+01
17	.0000E+00	18	.0000E+00	19	.0000E+00	20	.0000E+00	21	.0000E+00	22	.0000E+00	23	.0000E+00	24	.0000E+00

DAY OF WEEK = SATURDAY

1	.0000E+00	2	.0000E+00	3	.0000E+00	4	.0000E+00	5	.0000E+00	6	.0000E+00	7	.0000E+00	8	.0000E+00
9	.0000E+00	10	.0000E+00	11	.0000E+00	12	.0000E+00	13	.0000E+00	14	.0000E+00	15	.0000E+00	16	.0000E+00
17	.0000E+00	18	.0000E+00	19	.0000E+00	20	.0000E+00	21	.0000E+00	22	.0000E+00	23	.0000E+00	24	.0000E+00

DAY OF WEEK = SUNDAY

1	.0000E+00	2	.0000E+00	3	.0000E+00	4	.0000E+00	5	.0000E+00	6	.0000E+00	7	.0000E+00	8	.0000E+00
9	.0000E+00	10	.0000E+00	11	.0000E+00	12	.0000E+00	13	.0000E+00	14	.0000E+00	15	.0000E+00	16	.0000E+00
17	.0000E+00	18	.0000E+00	19	.0000E+00	20	.0000E+00	21	.0000E+00	22	.0000E+00	23	.0000E+00	24	.0000E+00

```
 *** AERMOD - VERSION 22112  ***   *** C:\Lakes\Project Files\Garvey\Garvey.isc
***        03/04/24
 *** AERMET - VERSION  16216 ***   ***
***        13:00:54

PAGE 222
 *** MODELOPTs:    RegDFAULT  CONC  ELEV  URBAN  ADJ_U*

                   * SOURCE EMISSION RATE SCALARS WHICH VARY DIURNALLY AND BY DAY
OF WEEK (HRDOW) *

 SOURCE ID = L0001998     ; SOURCE TYPE = VOLUME   :
  HOUR   SCALAR   HOUR   SCALAR   HOUR   SCALAR   HOUR   SCALAR   HOUR   SCALAR
HOUR   SCALAR   HOUR   SCALAR   HOUR   SCALAR
 - - - - - - - - - - - - - - - - - - - - - - - - - - - - - - - - - - - - - - - -
- - - - - - - - - - - - - - - - - - - - - - - - -
                                                DAY OF WEEK = WEEKDAY
    1  .0000E+00    2  .0000E+00    3  .0000E+00    4  .0000E+00    5  .0000E+00
6  .0000E+00    7  .1000E+01    8  .1000E+01
    9  .1000E+01   10  .1000E+01   11  .1000E+01   12  .1000E+01   13  .1000E+01
14  .1000E+01   15  .1000E+01   16  .1000E+01
   17  .0000E+00   18  .0000E+00   19  .0000E+00   20  .0000E+00   21  .0000E+00
22  .0000E+00   23  .0000E+00   24  .0000E+00
                                                DAY OF WEEK = SATURDAY
    1  .0000E+00    2  .0000E+00    3  .0000E+00    4  .0000E+00    5  .0000E+00
6  .0000E+00    7  .0000E+00    8  .0000E+00
    9  .0000E+00   10  .0000E+00   11  .0000E+00   12  .0000E+00   13  .0000E+00
14  .0000E+00   15  .0000E+00   16  .0000E+00
   17  .0000E+00   18  .0000E+00   19  .0000E+00   20  .0000E+00   21  .0000E+00
22  .0000E+00   23  .0000E+00   24  .0000E+00
                                                DAY OF WEEK = SUNDAY
    1  .0000E+00    2  .0000E+00    3  .0000E+00    4  .0000E+00    5  .0000E+00
6  .0000E+00    7  .0000E+00    8  .0000E+00
    9  .0000E+00   10  .0000E+00   11  .0000E+00   12  .0000E+00   13  .0000E+00
14  .0000E+00   15  .0000E+00   16  .0000E+00
   17  .0000E+00   18  .0000E+00   19  .0000E+00   20  .0000E+00   21  .0000E+00
22  .0000E+00   23  .0000E+00   24  .0000E+00
```

```
 *** AERMOD - VERSION 22112  ***   *** C:\Lakes\Project Files\Garvey\Garvey.isc
***        03/04/24
 *** AERMET - VERSION  16216 ***   ***
***        13:00:54

PAGE 223
 *** MODELOPTs:    RegDFAULT  CONC  ELEV  URBAN  ADJ_U*

                   * SOURCE EMISSION RATE SCALARS WHICH VARY DIURNALLY AND BY DAY
OF WEEK (HRDOW) *

 SOURCE ID = L0001999     ; SOURCE TYPE = VOLUME   :
  HOUR   SCALAR   HOUR   SCALAR   HOUR   SCALAR   HOUR   SCALAR   HOUR   SCALAR
HOUR   SCALAR   HOUR   SCALAR   HOUR   SCALAR
 - - - - - - - - - - - - - - - - - - - - - - - - - - - - - - - - - - - - - - - -
- - - - - - - - - - - - - - - - - - - - - - - - -
                                                DAY OF WEEK = WEEKDAY
    1  .0000E+00    2  .0000E+00    3  .0000E+00    4  .0000E+00    5  .0000E+00
6  .0000E+00    7  .1000E+01    8  .1000E+01
    9  .1000E+01   10  .1000E+01   11  .1000E+01   12  .1000E+01   13  .1000E+01
14  .1000E+01   15  .1000E+01   16  .1000E+01
   17  .0000E+00   18  .0000E+00   19  .0000E+00   20  .0000E+00   21  .0000E+00
22  .0000E+00   23  .0000E+00   24  .0000E+00
                                                DAY OF WEEK = SATURDAY
    1  .0000E+00    2  .0000E+00    3  .0000E+00    4  .0000E+00    5  .0000E+00
6  .0000E+00    7  .0000E+00    8  .0000E+00
    9  .0000E+00   10  .0000E+00   11  .0000E+00   12  .0000E+00   13  .0000E+00
14  .0000E+00   15  .0000E+00   16  .0000E+00
   17  .0000E+00   18  .0000E+00   19  .0000E+00   20  .0000E+00   21  .0000E+00
22  .0000E+00   23  .0000E+00   24  .0000E+00
                                                DAY OF WEEK = SUNDAY
    1  .0000E+00    2  .0000E+00    3  .0000E+00    4  .0000E+00    5  .0000E+00
6  .0000E+00    7  .0000E+00    8  .0000E+00
    9  .0000E+00   10  .0000E+00   11  .0000E+00   12  .0000E+00   13  .0000E+00
14  .0000E+00   15  .0000E+00   16  .0000E+00
   17  .0000E+00   18  .0000E+00   19  .0000E+00   20  .0000E+00   21  .0000E+00
22  .0000E+00   23  .0000E+00   24  .0000E+00
```

*** MODELOPTs: RegDFAULT CONC ELEV URBAN ADJ_U*

* SOURCE EMISSION RATE SCALARS WHICH VARY DIURNALLY AND BY DAY OF WEEK (HRDOW) *

SOURCE ID = L0002000 ; SOURCE TYPE = VOLUME :

HOUR	SCALAR	HOUR	SCALAR	HOUR	SCALAR	HOUR	SCALAR	HOUR	SCALAR	HOUR	SCALAR	HOUR	SCALAR	HOUR	SCALAR

DAY OF WEEK = WEEKDAY

1	.0000E+00	2	.0000E+00	3	.0000E+00	4	.0000E+00	5	.0000E+00	6	.0000E+00	7	.1000E+01	8	.1000E+01
9	.1000E+01	10	.1000E+01	11	.1000E+01	12	.1000E+01	13	.1000E+01	14	.1000E+01	15	.1000E+01	16	.1000E+01
17	.0000E+00	18	.0000E+00	19	.0000E+00	20	.0000E+00	21	.0000E+00	22	.0000E+00	23	.0000E+00	24	.0000E+00

DAY OF WEEK = SATURDAY

1	.0000E+00	2	.0000E+00	3	.0000E+00	4	.0000E+00	5	.0000E+00	6	.0000E+00	7	.0000E+00	8	.0000E+00
9	.0000E+00	10	.0000E+00	11	.0000E+00	12	.0000E+00	13	.0000E+00	14	.0000E+00	15	.0000E+00	16	.0000E+00
17	.0000E+00	18	.0000E+00	19	.0000E+00	20	.0000E+00	21	.0000E+00	22	.0000E+00	23	.0000E+00	24	.0000E+00

DAY OF WEEK = SUNDAY

1	.0000E+00	2	.0000E+00	3	.0000E+00	4	.0000E+00	5	.0000E+00	6	.0000E+00	7	.0000E+00	8	.0000E+00
9	.0000E+00	10	.0000E+00	11	.0000E+00	12	.0000E+00	13	.0000E+00	14	.0000E+00	15	.0000E+00	16	.0000E+00
17	.0000E+00	18	.0000E+00	19	.0000E+00	20	.0000E+00	21	.0000E+00	22	.0000E+00	23	.0000E+00	24	.0000E+00

*** MODELOPTs: RegDFAULT CONC ELEV URBAN ADJ_U*

* SOURCE EMISSION RATE SCALARS WHICH VARY DIURNALLY AND BY DAY OF WEEK (HRDOW) *

SOURCE ID = L0002001 ; SOURCE TYPE = VOLUME :

HOUR	SCALAR	HOUR	SCALAR	HOUR	SCALAR	HOUR	SCALAR	HOUR	SCALAR	HOUR	SCALAR	HOUR	SCALAR	HOUR	SCALAR

DAY OF WEEK = WEEKDAY

1	.0000E+00	2	.0000E+00	3	.0000E+00	4	.0000E+00	5	.0000E+00	6	.0000E+00	7	.1000E+01	8	.1000E+01
9	.1000E+01	10	.1000E+01	11	.1000E+01	12	.1000E+01	13	.1000E+01	14	.1000E+01	15	.1000E+01	16	.1000E+01
17	.0000E+00	18	.0000E+00	19	.0000E+00	20	.0000E+00	21	.0000E+00	22	.0000E+00	23	.0000E+00	24	.0000E+00

DAY OF WEEK = SATURDAY

1	.0000E+00	2	.0000E+00	3	.0000E+00	4	.0000E+00	5	.0000E+00	6	.0000E+00	7	.0000E+00	8	.0000E+00
9	.0000E+00	10	.0000E+00	11	.0000E+00	12	.0000E+00	13	.0000E+00	14	.0000E+00	15	.0000E+00	16	.0000E+00
17	.0000E+00	18	.0000E+00	19	.0000E+00	20	.0000E+00	21	.0000E+00	22	.0000E+00	23	.0000E+00	24	.0000E+00

DAY OF WEEK = SUNDAY

1	.0000E+00	2	.0000E+00	3	.0000E+00	4	.0000E+00	5	.0000E+00	6	.0000E+00	7	.0000E+00	8	.0000E+00
9	.0000E+00	10	.0000E+00	11	.0000E+00	12	.0000E+00	13	.0000E+00	14	.0000E+00	15	.0000E+00	16	.0000E+00
17	.0000E+00	18	.0000E+00	19	.0000E+00	20	.0000E+00	21	.0000E+00	22	.0000E+00	23	.0000E+00	24	.0000E+00

*** MODELOPTs: RegDFAULT CONC ELEV URBAN ADJ_U*

* SOURCE EMISSION RATE SCALARS WHICH VARY DIURNALLY AND BY DAY OF WEEK (HRDOW) *

SOURCE ID = L0002002 ; SOURCE TYPE = VOLUME :

HOUR	SCALAR	HOUR	SCALAR	HOUR	SCALAR	HOUR	SCALAR	HOUR	SCALAR	HOUR	SCALAR	HOUR	SCALAR	HOUR	SCALAR

DAY OF WEEK = WEEKDAY

1	.0000E+00	2	.0000E+00	3	.0000E+00	4	.0000E+00	5	.0000E+00	6	.0000E+00	7	.1000E+01	8	.1000E+01
9	.1000E+01	10	.1000E+01	11	.1000E+01	12	.1000E+01	13	.1000E+01	14	.1000E+01	15	.1000E+01	16	.1000E+01
17	.0000E+00	18	.0000E+00	19	.0000E+00	20	.0000E+00	21	.0000E+00	22	.0000E+00	23	.0000E+00	24	.0000E+00

DAY OF WEEK = SATURDAY

1	.0000E+00	2	.0000E+00	3	.0000E+00	4	.0000E+00	5	.0000E+00	6	.0000E+00	7	.0000E+00	8	.0000E+00
9	.0000E+00	10	.0000E+00	11	.0000E+00	12	.0000E+00	13	.0000E+00	14	.0000E+00	15	.0000E+00	16	.0000E+00
17	.0000E+00	18	.0000E+00	19	.0000E+00	20	.0000E+00	21	.0000E+00	22	.0000E+00	23	.0000E+00	24	.0000E+00

DAY OF WEEK = SUNDAY

1	.0000E+00	2	.0000E+00	3	.0000E+00	4	.0000E+00	5	.0000E+00	6	.0000E+00	7	.0000E+00	8	.0000E+00
9	.0000E+00	10	.0000E+00	11	.0000E+00	12	.0000E+00	13	.0000E+00	14	.0000E+00	15	.0000E+00	16	.0000E+00
17	.0000E+00	18	.0000E+00	19	.0000E+00	20	.0000E+00	21	.0000E+00	22	.0000E+00	23	.0000E+00	24	.0000E+00

```
 *** AERMOD - VERSION 22112  ***   *** C:\Lakes\Project Files\Garvey\Garvey.isc
***        03/04/24
 *** AERMET - VERSION  16216 ***   ***
***        13:00:54

PAGE 227
 *** MODELOPTs:    RegDFAULT  CONC  ELEV  URBAN  ADJ_U*

                   * SOURCE EMISSION RATE SCALARS WHICH VARY DIURNALLY AND BY DAY
OF WEEK (HRDOW) *

 SOURCE ID = L0002003     ; SOURCE TYPE = VOLUME   :
  HOUR   SCALAR   HOUR   SCALAR   HOUR   SCALAR   HOUR   SCALAR   HOUR   SCALAR
HOUR   SCALAR   HOUR   SCALAR   HOUR   SCALAR
 - - - - - - - - - - - - - - - - - - - - - - - - - - - - - - - - - - - - - - - -
- - - - - - - - - - - - - - - - - - - - - - - - -
                                                DAY OF WEEK = WEEKDAY
    1  .0000E+00    2  .0000E+00    3  .0000E+00    4  .0000E+00    5  .0000E+00
6  .0000E+00    7  .1000E+01    8  .1000E+01
    9  .1000E+01   10  .1000E+01   11  .1000E+01   12  .1000E+01   13  .1000E+01
14  .1000E+01   15  .1000E+01   16  .1000E+01
   17  .0000E+00   18  .0000E+00   19  .0000E+00   20  .0000E+00   21  .0000E+00
22  .0000E+00   23  .0000E+00   24  .0000E+00
                                                DAY OF WEEK = SATURDAY
    1  .0000E+00    2  .0000E+00    3  .0000E+00    4  .0000E+00    5  .0000E+00
6  .0000E+00    7  .0000E+00    8  .0000E+00
    9  .0000E+00   10  .0000E+00   11  .0000E+00   12  .0000E+00   13  .0000E+00
14  .0000E+00   15  .0000E+00   16  .0000E+00
   17  .0000E+00   18  .0000E+00   19  .0000E+00   20  .0000E+00   21  .0000E+00
22  .0000E+00   23  .0000E+00   24  .0000E+00
                                                DAY OF WEEK = SUNDAY
    1  .0000E+00    2  .0000E+00    3  .0000E+00    4  .0000E+00    5  .0000E+00
6  .0000E+00    7  .0000E+00    8  .0000E+00
    9  .0000E+00   10  .0000E+00   11  .0000E+00   12  .0000E+00   13  .0000E+00
14  .0000E+00   15  .0000E+00   16  .0000E+00
   17  .0000E+00   18  .0000E+00   19  .0000E+00   20  .0000E+00   21  .0000E+00
22  .0000E+00   23  .0000E+00   24  .0000E+00
```

*** MODELOPTs: RegDFAULT CONC ELEV URBAN ADJ_U*

* SOURCE EMISSION RATE SCALARS WHICH VARY DIURNALLY AND BY DAY OF WEEK (HRDOW) *

SOURCE ID = L0002004 ; SOURCE TYPE = VOLUME :

HOUR	SCALAR	HOUR	SCALAR	HOUR	SCALAR	HOUR	SCALAR	HOUR	SCALAR	HOUR	SCALAR	HOUR	SCALAR	HOUR	SCALAR

DAY OF WEEK = WEEKDAY

1	.0000E+00	2	.0000E+00	3	.0000E+00	4	.0000E+00	5	.0000E+00	6	.0000E+00	7	.1000E+01	8	.1000E+01
9	.1000E+01	10	.1000E+01	11	.1000E+01	12	.1000E+01	13	.1000E+01	14	.1000E+01	15	.1000E+01	16	.1000E+01
17	.0000E+00	18	.0000E+00	19	.0000E+00	20	.0000E+00	21	.0000E+00	22	.0000E+00	23	.0000E+00	24	.0000E+00

DAY OF WEEK = SATURDAY

1	.0000E+00	2	.0000E+00	3	.0000E+00	4	.0000E+00	5	.0000E+00	6	.0000E+00	7	.0000E+00	8	.0000E+00
9	.0000E+00	10	.0000E+00	11	.0000E+00	12	.0000E+00	13	.0000E+00	14	.0000E+00	15	.0000E+00	16	.0000E+00
17	.0000E+00	18	.0000E+00	19	.0000E+00	20	.0000E+00	21	.0000E+00	22	.0000E+00	23	.0000E+00	24	.0000E+00

DAY OF WEEK = SUNDAY

1	.0000E+00	2	.0000E+00	3	.0000E+00	4	.0000E+00	5	.0000E+00	6	.0000E+00	7	.0000E+00	8	.0000E+00
9	.0000E+00	10	.0000E+00	11	.0000E+00	12	.0000E+00	13	.0000E+00	14	.0000E+00	15	.0000E+00	16	.0000E+00
17	.0000E+00	18	.0000E+00	19	.0000E+00	20	.0000E+00	21	.0000E+00	22	.0000E+00	23	.0000E+00	24	.0000E+00

*** MODELOPTs: RegDFAULT CONC ELEV URBAN ADJ_U*

* SOURCE EMISSION RATE SCALARS WHICH VARY DIURNALLY AND BY DAY OF WEEK (HRDOW) *

SOURCE ID = L0002005 ; SOURCE TYPE = VOLUME :

HOUR	SCALAR	HOUR	SCALAR	HOUR	SCALAR	HOUR	SCALAR	HOUR	SCALAR	HOUR	SCALAR	HOUR	SCALAR	HOUR	SCALAR

DAY OF WEEK = WEEKDAY

1	.0000E+00	2	.0000E+00	3	.0000E+00	4	.0000E+00	5	.0000E+00	6	.0000E+00	7	.1000E+01	8	.1000E+01
9	.1000E+01	10	.1000E+01	11	.1000E+01	12	.1000E+01	13	.1000E+01	14	.1000E+01	15	.1000E+01	16	.1000E+01
17	.0000E+00	18	.0000E+00	19	.0000E+00	20	.0000E+00	21	.0000E+00	22	.0000E+00	23	.0000E+00	24	.0000E+00

DAY OF WEEK = SATURDAY

1	.0000E+00	2	.0000E+00	3	.0000E+00	4	.0000E+00	5	.0000E+00	6	.0000E+00	7	.0000E+00	8	.0000E+00
9	.0000E+00	10	.0000E+00	11	.0000E+00	12	.0000E+00	13	.0000E+00	14	.0000E+00	15	.0000E+00	16	.0000E+00
17	.0000E+00	18	.0000E+00	19	.0000E+00	20	.0000E+00	21	.0000E+00	22	.0000E+00	23	.0000E+00	24	.0000E+00

DAY OF WEEK = SUNDAY

1	.0000E+00	2	.0000E+00	3	.0000E+00	4	.0000E+00	5	.0000E+00	6	.0000E+00	7	.0000E+00	8	.0000E+00
9	.0000E+00	10	.0000E+00	11	.0000E+00	12	.0000E+00	13	.0000E+00	14	.0000E+00	15	.0000E+00	16	.0000E+00
17	.0000E+00	18	.0000E+00	19	.0000E+00	20	.0000E+00	21	.0000E+00	22	.0000E+00	23	.0000E+00	24	.0000E+00

```
 *** AERMOD - VERSION 22112  ***   *** C:\Lakes\Project Files\Garvey\Garvey.isc
***        03/04/24
 *** AERMET - VERSION  16216 ***   ***
***        13:00:54

PAGE 230
 *** MODELOPTs:    RegDFAULT  CONC  ELEV  URBAN  ADJ_U*

                   * SOURCE EMISSION RATE SCALARS WHICH VARY DIURNALLY AND BY DAY
OF WEEK (HRDOW) *

 SOURCE ID = L0002006     ; SOURCE TYPE = VOLUME   :
  HOUR   SCALAR   HOUR   SCALAR   HOUR   SCALAR   HOUR   SCALAR   HOUR   SCALAR
HOUR   SCALAR   HOUR   SCALAR   HOUR   SCALAR
 - - - - - - - - - - - - - - - - - - - - - - - - - - - - - - - - - - - - - - - -
- - - - - - - - - - - - - - - - - - - - - - - - -
                                                DAY OF WEEK = WEEKDAY
    1  .0000E+00    2  .0000E+00    3  .0000E+00    4  .0000E+00    5  .0000E+00
6  .0000E+00    7  .1000E+01    8  .1000E+01
    9  .1000E+01   10  .1000E+01   11  .1000E+01   12  .1000E+01   13  .1000E+01
14  .1000E+01   15  .1000E+01   16  .1000E+01
   17  .0000E+00   18  .0000E+00   19  .0000E+00   20  .0000E+00   21  .0000E+00
22  .0000E+00   23  .0000E+00   24  .0000E+00
                                                DAY OF WEEK = SATURDAY
    1  .0000E+00    2  .0000E+00    3  .0000E+00    4  .0000E+00    5  .0000E+00
6  .0000E+00    7  .0000E+00    8  .0000E+00
    9  .0000E+00   10  .0000E+00   11  .0000E+00   12  .0000E+00   13  .0000E+00
14  .0000E+00   15  .0000E+00   16  .0000E+00
   17  .0000E+00   18  .0000E+00   19  .0000E+00   20  .0000E+00   21  .0000E+00
22  .0000E+00   23  .0000E+00   24  .0000E+00
                                                DAY OF WEEK = SUNDAY
    1  .0000E+00    2  .0000E+00    3  .0000E+00    4  .0000E+00    5  .0000E+00
6  .0000E+00    7  .0000E+00    8  .0000E+00
    9  .0000E+00   10  .0000E+00   11  .0000E+00   12  .0000E+00   13  .0000E+00
14  .0000E+00   15  .0000E+00   16  .0000E+00
   17  .0000E+00   18  .0000E+00   19  .0000E+00   20  .0000E+00   21  .0000E+00
22  .0000E+00   23  .0000E+00   24  .0000E+00
```

```
 *** AERMOD - VERSION 22112  ***   *** C:\Lakes\Project Files\Garvey\Garvey.isc
***        03/04/24
 *** AERMET - VERSION  16216 ***   ***
***        13:00:54

PAGE 231
 *** MODELOPTs:    RegDFAULT  CONC  ELEV  URBAN  ADJ_U*

                   * SOURCE EMISSION RATE SCALARS WHICH VARY DIURNALLY AND BY DAY
OF WEEK (HRDOW) *

 SOURCE ID = L0002007     ; SOURCE TYPE = VOLUME   :
  HOUR   SCALAR   HOUR   SCALAR   HOUR   SCALAR   HOUR   SCALAR   HOUR   SCALAR
HOUR   SCALAR   HOUR   SCALAR   HOUR   SCALAR
 - - - - - - - - - - - - - - - - - - - - - - - - - - - - - - - - - - - - - - - -
- - - - - - - - - - - - - - - - - - - - - - - - - -
                                                DAY OF WEEK = WEEKDAY
    1  .0000E+00    2  .0000E+00    3  .0000E+00    4  .0000E+00    5  .0000E+00
6  .0000E+00    7  .1000E+01    8  .1000E+01
    9  .1000E+01   10  .1000E+01   11  .1000E+01   12  .1000E+01   13  .1000E+01
14  .1000E+01   15  .1000E+01   16  .1000E+01
   17  .0000E+00   18  .0000E+00   19  .0000E+00   20  .0000E+00   21  .0000E+00
22  .0000E+00   23  .0000E+00   24  .0000E+00
                                                DAY OF WEEK = SATURDAY
    1  .0000E+00    2  .0000E+00    3  .0000E+00    4  .0000E+00    5  .0000E+00
6  .0000E+00    7  .0000E+00    8  .0000E+00
    9  .0000E+00   10  .0000E+00   11  .0000E+00   12  .0000E+00   13  .0000E+00
14  .0000E+00   15  .0000E+00   16  .0000E+00
   17  .0000E+00   18  .0000E+00   19  .0000E+00   20  .0000E+00   21  .0000E+00
22  .0000E+00   23  .0000E+00   24  .0000E+00
                                                DAY OF WEEK = SUNDAY
    1  .0000E+00    2  .0000E+00    3  .0000E+00    4  .0000E+00    5  .0000E+00
6  .0000E+00    7  .0000E+00    8  .0000E+00
    9  .0000E+00   10  .0000E+00   11  .0000E+00   12  .0000E+00   13  .0000E+00
14  .0000E+00   15  .0000E+00   16  .0000E+00
   17  .0000E+00   18  .0000E+00   19  .0000E+00   20  .0000E+00   21  .0000E+00
22  .0000E+00   23  .0000E+00   24  .0000E+00
```

```
 *** AERMOD - VERSION 22112  ***   *** C:\Lakes\Project Files\Garvey\Garvey.isc
***        03/04/24
 *** AERMET - VERSION  16216 ***   ***
***        13:00:54

PAGE 232
 *** MODELOPTs:    RegDFAULT  CONC  ELEV  URBAN  ADJ_U*

                   * SOURCE EMISSION RATE SCALARS WHICH VARY DIURNALLY AND BY DAY
OF WEEK (HRDOW) *

 SOURCE ID = L0002008     ; SOURCE TYPE = VOLUME   :
  HOUR   SCALAR   HOUR   SCALAR   HOUR   SCALAR   HOUR   SCALAR   HOUR   SCALAR
HOUR   SCALAR   HOUR   SCALAR   HOUR   SCALAR
 - - - - - - - - - - - - - - - - - - - - - - - - - - - - - - - - - - - - - - - -
- - - - - - - - - - - - - - - - - - - - - - - - -
                                                DAY OF WEEK = WEEKDAY
    1  .0000E+00    2  .0000E+00    3  .0000E+00    4  .0000E+00    5  .0000E+00
6  .0000E+00    7  .1000E+01    8  .1000E+01
    9  .1000E+01   10  .1000E+01   11  .1000E+01   12  .1000E+01   13  .1000E+01
14  .1000E+01   15  .1000E+01   16  .1000E+01
   17  .0000E+00   18  .0000E+00   19  .0000E+00   20  .0000E+00   21  .0000E+00
22  .0000E+00   23  .0000E+00   24  .0000E+00
                                                DAY OF WEEK = SATURDAY
    1  .0000E+00    2  .0000E+00    3  .0000E+00    4  .0000E+00    5  .0000E+00
6  .0000E+00    7  .0000E+00    8  .0000E+00
    9  .0000E+00   10  .0000E+00   11  .0000E+00   12  .0000E+00   13  .0000E+00
14  .0000E+00   15  .0000E+00   16  .0000E+00
   17  .0000E+00   18  .0000E+00   19  .0000E+00   20  .0000E+00   21  .0000E+00
22  .0000E+00   23  .0000E+00   24  .0000E+00
                                                DAY OF WEEK = SUNDAY
    1  .0000E+00    2  .0000E+00    3  .0000E+00    4  .0000E+00    5  .0000E+00
6  .0000E+00    7  .0000E+00    8  .0000E+00
    9  .0000E+00   10  .0000E+00   11  .0000E+00   12  .0000E+00   13  .0000E+00
14  .0000E+00   15  .0000E+00   16  .0000E+00
   17  .0000E+00   18  .0000E+00   19  .0000E+00   20  .0000E+00   21  .0000E+00
22  .0000E+00   23  .0000E+00   24  .0000E+00
```

*** MODELOPTs: RegDFAULT CONC ELEV URBAN ADJ_U*

* SOURCE EMISSION RATE SCALARS WHICH VARY DIURNALLY AND BY DAY OF WEEK (HRDOW) *

SOURCE ID = L0002009 ; SOURCE TYPE = VOLUME :

HOUR	SCALAR	HOUR	SCALAR	HOUR	SCALAR	HOUR	SCALAR	HOUR	SCALAR	HOUR	SCALAR	HOUR	SCALAR	HOUR	SCALAR

DAY OF WEEK = WEEKDAY

1	.0000E+00	2	.0000E+00	3	.0000E+00	4	.0000E+00	5	.0000E+00	6	.0000E+00	7	.1000E+01	8	.1000E+01
9	.1000E+01	10	.1000E+01	11	.1000E+01	12	.1000E+01	13	.1000E+01	14	.1000E+01	15	.1000E+01	16	.1000E+01
17	.0000E+00	18	.0000E+00	19	.0000E+00	20	.0000E+00	21	.0000E+00	22	.0000E+00	23	.0000E+00	24	.0000E+00

DAY OF WEEK = SATURDAY

1	.0000E+00	2	.0000E+00	3	.0000E+00	4	.0000E+00	5	.0000E+00	6	.0000E+00	7	.0000E+00	8	.0000E+00
9	.0000E+00	10	.0000E+00	11	.0000E+00	12	.0000E+00	13	.0000E+00	14	.0000E+00	15	.0000E+00	16	.0000E+00
17	.0000E+00	18	.0000E+00	19	.0000E+00	20	.0000E+00	21	.0000E+00	22	.0000E+00	23	.0000E+00	24	.0000E+00

DAY OF WEEK = SUNDAY

1	.0000E+00	2	.0000E+00	3	.0000E+00	4	.0000E+00	5	.0000E+00	6	.0000E+00	7	.0000E+00	8	.0000E+00
9	.0000E+00	10	.0000E+00	11	.0000E+00	12	.0000E+00	13	.0000E+00	14	.0000E+00	15	.0000E+00	16	.0000E+00
17	.0000E+00	18	.0000E+00	19	.0000E+00	20	.0000E+00	21	.0000E+00	22	.0000E+00	23	.0000E+00	24	.0000E+00

```
 *** AERMOD - VERSION 22112  ***   *** C:\Lakes\Project Files\Garvey\Garvey.isc
***        03/04/24
 *** AERMET - VERSION  16216 ***   ***
***        13:00:54

PAGE 234
 *** MODELOPTs:    RegDFAULT  CONC  ELEV  URBAN  ADJ_U*

                   * SOURCE EMISSION RATE SCALARS WHICH VARY DIURNALLY AND BY DAY
OF WEEK (HRDOW) *

 SOURCE ID = L0002010     ; SOURCE TYPE = VOLUME   :
  HOUR   SCALAR   HOUR   SCALAR   HOUR   SCALAR   HOUR   SCALAR   HOUR   SCALAR
HOUR   SCALAR   HOUR   SCALAR   HOUR   SCALAR
 - - - - - - - - - - - - - - - - - - - - - - - - - - - - - - - - - - - - - - - -
- - - - - - - - - - - - - - - - - - - - - - - - -
                                                DAY OF WEEK = WEEKDAY
    1  .0000E+00    2  .0000E+00    3  .0000E+00    4  .0000E+00    5  .0000E+00
6  .0000E+00    7  .1000E+01    8  .1000E+01
    9  .1000E+01   10  .1000E+01   11  .1000E+01   12  .1000E+01   13  .1000E+01
14  .1000E+01   15  .1000E+01   16  .1000E+01
   17  .0000E+00   18  .0000E+00   19  .0000E+00   20  .0000E+00   21  .0000E+00
22  .0000E+00   23  .0000E+00   24  .0000E+00
                                                DAY OF WEEK = SATURDAY
    1  .0000E+00    2  .0000E+00    3  .0000E+00    4  .0000E+00    5  .0000E+00
6  .0000E+00    7  .0000E+00    8  .0000E+00
    9  .0000E+00   10  .0000E+00   11  .0000E+00   12  .0000E+00   13  .0000E+00
14  .0000E+00   15  .0000E+00   16  .0000E+00
   17  .0000E+00   18  .0000E+00   19  .0000E+00   20  .0000E+00   21  .0000E+00
22  .0000E+00   23  .0000E+00   24  .0000E+00
                                                DAY OF WEEK = SUNDAY
    1  .0000E+00    2  .0000E+00    3  .0000E+00    4  .0000E+00    5  .0000E+00
6  .0000E+00    7  .0000E+00    8  .0000E+00
    9  .0000E+00   10  .0000E+00   11  .0000E+00   12  .0000E+00   13  .0000E+00
14  .0000E+00   15  .0000E+00   16  .0000E+00
   17  .0000E+00   18  .0000E+00   19  .0000E+00   20  .0000E+00   21  .0000E+00
22  .0000E+00   23  .0000E+00   24  .0000E+00
```

```
 *** AERMOD - VERSION 22112  ***   *** C:\Lakes\Project Files\Garvey\Garvey.isc
***        03/04/24
 *** AERMET - VERSION  16216 ***   ***
***        13:00:54

PAGE 235
 *** MODELOPTs:    RegDFAULT  CONC  ELEV  URBAN  ADJ_U*

                   * SOURCE EMISSION RATE SCALARS WHICH VARY DIURNALLY AND BY DAY
OF WEEK (HRDOW) *

 SOURCE ID = L0002011     ; SOURCE TYPE = VOLUME   :
  HOUR   SCALAR   HOUR   SCALAR   HOUR   SCALAR   HOUR   SCALAR   HOUR   SCALAR
HOUR   SCALAR   HOUR   SCALAR   HOUR   SCALAR
 - - - - - - - - - - - - - - - - - - - - - - - - - - - - - - - - - - - - - - - -
- - - - - - - - - - - - - - - - - - - - - - - - -
                                                DAY OF WEEK = WEEKDAY
    1  .0000E+00    2  .0000E+00    3  .0000E+00    4  .0000E+00    5  .0000E+00
6  .0000E+00    7  .1000E+01    8  .1000E+01
    9  .1000E+01   10  .1000E+01   11  .1000E+01   12  .1000E+01   13  .1000E+01
14  .1000E+01   15  .1000E+01   16  .1000E+01
   17  .0000E+00   18  .0000E+00   19  .0000E+00   20  .0000E+00   21  .0000E+00
22  .0000E+00   23  .0000E+00   24  .0000E+00
                                                DAY OF WEEK = SATURDAY
    1  .0000E+00    2  .0000E+00    3  .0000E+00    4  .0000E+00    5  .0000E+00
6  .0000E+00    7  .0000E+00    8  .0000E+00
    9  .0000E+00   10  .0000E+00   11  .0000E+00   12  .0000E+00   13  .0000E+00
14  .0000E+00   15  .0000E+00   16  .0000E+00
   17  .0000E+00   18  .0000E+00   19  .0000E+00   20  .0000E+00   21  .0000E+00
22  .0000E+00   23  .0000E+00   24  .0000E+00
                                                DAY OF WEEK = SUNDAY
    1  .0000E+00    2  .0000E+00    3  .0000E+00    4  .0000E+00    5  .0000E+00
6  .0000E+00    7  .0000E+00    8  .0000E+00
    9  .0000E+00   10  .0000E+00   11  .0000E+00   12  .0000E+00   13  .0000E+00
14  .0000E+00   15  .0000E+00   16  .0000E+00
   17  .0000E+00   18  .0000E+00   19  .0000E+00   20  .0000E+00   21  .0000E+00
22  .0000E+00   23  .0000E+00   24  .0000E+00
```

*** MODELOPTs: RegDFAULT CONC ELEV URBAN ADJ_U*

* SOURCE EMISSION RATE SCALARS WHICH VARY DIURNALLY AND BY DAY OF WEEK (HRDOW) *

SOURCE ID = L0002012 ; SOURCE TYPE = VOLUME :

HOUR	SCALAR	HOUR	SCALAR	HOUR	SCALAR	HOUR	SCALAR	HOUR	SCALAR	HOUR	SCALAR	HOUR	SCALAR	HOUR	SCALAR

DAY OF WEEK = WEEKDAY

1	.0000E+00	2	.0000E+00	3	.0000E+00	4	.0000E+00	5	.0000E+00	6	.0000E+00	7	.1000E+01	8	.1000E+01
9	.1000E+01	10	.1000E+01	11	.1000E+01	12	.1000E+01	13	.1000E+01	14	.1000E+01	15	.1000E+01	16	.1000E+01
17	.0000E+00	18	.0000E+00	19	.0000E+00	20	.0000E+00	21	.0000E+00	22	.0000E+00	23	.0000E+00	24	.0000E+00

DAY OF WEEK = SATURDAY

1	.0000E+00	2	.0000E+00	3	.0000E+00	4	.0000E+00	5	.0000E+00	6	.0000E+00	7	.0000E+00	8	.0000E+00
9	.0000E+00	10	.0000E+00	11	.0000E+00	12	.0000E+00	13	.0000E+00	14	.0000E+00	15	.0000E+00	16	.0000E+00
17	.0000E+00	18	.0000E+00	19	.0000E+00	20	.0000E+00	21	.0000E+00	22	.0000E+00	23	.0000E+00	24	.0000E+00

DAY OF WEEK = SUNDAY

1	.0000E+00	2	.0000E+00	3	.0000E+00	4	.0000E+00	5	.0000E+00	6	.0000E+00	7	.0000E+00	8	.0000E+00
9	.0000E+00	10	.0000E+00	11	.0000E+00	12	.0000E+00	13	.0000E+00	14	.0000E+00	15	.0000E+00	16	.0000E+00
17	.0000E+00	18	.0000E+00	19	.0000E+00	20	.0000E+00	21	.0000E+00	22	.0000E+00	23	.0000E+00	24	.0000E+00

*** MODELOPTs: RegDFAULT CONC ELEV URBAN ADJ_U*

* SOURCE EMISSION RATE SCALARS WHICH VARY DIURNALLY AND BY DAY OF WEEK (HRDOW) *

SOURCE ID = L0002013 ; SOURCE TYPE = VOLUME :

HOUR	SCALAR	HOUR	SCALAR	HOUR	SCALAR	HOUR	SCALAR	HOUR	SCALAR	HOUR	SCALAR	HOUR	SCALAR	HOUR	SCALAR

DAY OF WEEK = WEEKDAY

1	.0000E+00	2	.0000E+00	3	.0000E+00	4	.0000E+00	5	.0000E+00	6	.0000E+00	7	.1000E+01	8	.1000E+01
9	.1000E+01	10	.1000E+01	11	.1000E+01	12	.1000E+01	13	.1000E+01	14	.1000E+01	15	.1000E+01	16	.1000E+01
17	.0000E+00	18	.0000E+00	19	.0000E+00	20	.0000E+00	21	.0000E+00	22	.0000E+00	23	.0000E+00	24	.0000E+00

DAY OF WEEK = SATURDAY

1	.0000E+00	2	.0000E+00	3	.0000E+00	4	.0000E+00	5	.0000E+00	6	.0000E+00	7	.0000E+00	8	.0000E+00
9	.0000E+00	10	.0000E+00	11	.0000E+00	12	.0000E+00	13	.0000E+00	14	.0000E+00	15	.0000E+00	16	.0000E+00
17	.0000E+00	18	.0000E+00	19	.0000E+00	20	.0000E+00	21	.0000E+00	22	.0000E+00	23	.0000E+00	24	.0000E+00

DAY OF WEEK = SUNDAY

1	.0000E+00	2	.0000E+00	3	.0000E+00	4	.0000E+00	5	.0000E+00	6	.0000E+00	7	.0000E+00	8	.0000E+00
9	.0000E+00	10	.0000E+00	11	.0000E+00	12	.0000E+00	13	.0000E+00	14	.0000E+00	15	.0000E+00	16	.0000E+00
17	.0000E+00	18	.0000E+00	19	.0000E+00	20	.0000E+00	21	.0000E+00	22	.0000E+00	23	.0000E+00	24	.0000E+00

```
 *** AERMOD - VERSION 22112  ***   *** C:\Lakes\Project Files\Garvey\Garvey.isc
***        03/04/24
 *** AERMET - VERSION  16216 ***   ***
***        13:00:54

PAGE 238
 *** MODELOPTs:    RegDFAULT  CONC  ELEV  URBAN  ADJ_U*

                   * SOURCE EMISSION RATE SCALARS WHICH VARY DIURNALLY AND BY DAY
OF WEEK (HRDOW) *

 SOURCE ID = L0002014     ; SOURCE TYPE = VOLUME   :
  HOUR   SCALAR   HOUR   SCALAR   HOUR   SCALAR   HOUR   SCALAR   HOUR   SCALAR
HOUR   SCALAR   HOUR   SCALAR   HOUR   SCALAR
 - - - - - - - - - - - - - - - - - - - - - - - - - - - - - - - - - - - - - - - -
- - - - - - - - - - - - - - - - - - - - - - - - -
                                                DAY OF WEEK = WEEKDAY
    1  .0000E+00    2  .0000E+00    3  .0000E+00    4  .0000E+00    5  .0000E+00
6  .0000E+00    7  .1000E+01    8  .1000E+01
    9  .1000E+01   10  .1000E+01   11  .1000E+01   12  .1000E+01   13  .1000E+01
14  .1000E+01   15  .1000E+01   16  .1000E+01
   17  .0000E+00   18  .0000E+00   19  .0000E+00   20  .0000E+00   21  .0000E+00
22  .0000E+00   23  .0000E+00   24  .0000E+00
                                                DAY OF WEEK = SATURDAY
    1  .0000E+00    2  .0000E+00    3  .0000E+00    4  .0000E+00    5  .0000E+00
6  .0000E+00    7  .0000E+00    8  .0000E+00
    9  .0000E+00   10  .0000E+00   11  .0000E+00   12  .0000E+00   13  .0000E+00
14  .0000E+00   15  .0000E+00   16  .0000E+00
   17  .0000E+00   18  .0000E+00   19  .0000E+00   20  .0000E+00   21  .0000E+00
22  .0000E+00   23  .0000E+00   24  .0000E+00
                                                DAY OF WEEK = SUNDAY
    1  .0000E+00    2  .0000E+00    3  .0000E+00    4  .0000E+00    5  .0000E+00
6  .0000E+00    7  .0000E+00    8  .0000E+00
    9  .0000E+00   10  .0000E+00   11  .0000E+00   12  .0000E+00   13  .0000E+00
14  .0000E+00   15  .0000E+00   16  .0000E+00
   17  .0000E+00   18  .0000E+00   19  .0000E+00   20  .0000E+00   21  .0000E+00
22  .0000E+00   23  .0000E+00   24  .0000E+00
```

*** MODELOPTs: RegDFAULT CONC ELEV URBAN ADJ_U*

* SOURCE EMISSION RATE SCALARS WHICH VARY DIURNALLY AND BY DAY OF WEEK (HRDOW) *

SOURCE ID = L0002015 ; SOURCE TYPE = VOLUME :

HOUR	SCALAR	HOUR	SCALAR	HOUR	SCALAR	HOUR	SCALAR	HOUR	SCALAR	HOUR	SCALAR	HOUR	SCALAR	HOUR	SCALAR

DAY OF WEEK = WEEKDAY

1	.0000E+00	2	.0000E+00	3	.0000E+00	4	.0000E+00	5	.0000E+00	6	.0000E+00	7	.1000E+01	8	.1000E+01
9	.1000E+01	10	.1000E+01	11	.1000E+01	12	.1000E+01	13	.1000E+01	14	.1000E+01	15	.1000E+01	16	.1000E+01
17	.0000E+00	18	.0000E+00	19	.0000E+00	20	.0000E+00	21	.0000E+00	22	.0000E+00	23	.0000E+00	24	.0000E+00

DAY OF WEEK = SATURDAY

1	.0000E+00	2	.0000E+00	3	.0000E+00	4	.0000E+00	5	.0000E+00	6	.0000E+00	7	.0000E+00	8	.0000E+00
9	.0000E+00	10	.0000E+00	11	.0000E+00	12	.0000E+00	13	.0000E+00	14	.0000E+00	15	.0000E+00	16	.0000E+00
17	.0000E+00	18	.0000E+00	19	.0000E+00	20	.0000E+00	21	.0000E+00	22	.0000E+00	23	.0000E+00	24	.0000E+00

DAY OF WEEK = SUNDAY

1	.0000E+00	2	.0000E+00	3	.0000E+00	4	.0000E+00	5	.0000E+00	6	.0000E+00	7	.0000E+00	8	.0000E+00
9	.0000E+00	10	.0000E+00	11	.0000E+00	12	.0000E+00	13	.0000E+00	14	.0000E+00	15	.0000E+00	16	.0000E+00
17	.0000E+00	18	.0000E+00	19	.0000E+00	20	.0000E+00	21	.0000E+00	22	.0000E+00	23	.0000E+00	24	.0000E+00

```
 *** AERMOD - VERSION 22112  ***   *** C:\Lakes\Project Files\Garvey\Garvey.isc
***        03/04/24
 *** AERMET - VERSION  16216 ***   ***
***        13:00:54

PAGE 240
 *** MODELOPTs:    RegDFAULT  CONC  ELEV  URBAN  ADJ_U*

                   * SOURCE EMISSION RATE SCALARS WHICH VARY DIURNALLY AND BY DAY
OF WEEK (HRDOW) *

 SOURCE ID = L0002016     ; SOURCE TYPE = VOLUME   :
  HOUR   SCALAR   HOUR   SCALAR   HOUR   SCALAR   HOUR   SCALAR   HOUR   SCALAR
HOUR   SCALAR   HOUR   SCALAR   HOUR   SCALAR
 - - - - - - - - - - - - - - - - - - - - - - - - - - - - - - - - - - - - - - - -
- - - - - - - - - - - - - - - - - - - - - - - - -
                                                DAY OF WEEK = WEEKDAY
    1  .0000E+00    2  .0000E+00    3  .0000E+00    4  .0000E+00    5  .0000E+00
6  .0000E+00    7  .1000E+01    8  .1000E+01
    9  .1000E+01   10  .1000E+01   11  .1000E+01   12  .1000E+01   13  .1000E+01
14  .1000E+01   15  .1000E+01   16  .1000E+01
   17  .0000E+00   18  .0000E+00   19  .0000E+00   20  .0000E+00   21  .0000E+00
22  .0000E+00   23  .0000E+00   24  .0000E+00
                                                DAY OF WEEK = SATURDAY
    1  .0000E+00    2  .0000E+00    3  .0000E+00    4  .0000E+00    5  .0000E+00
6  .0000E+00    7  .0000E+00    8  .0000E+00
    9  .0000E+00   10  .0000E+00   11  .0000E+00   12  .0000E+00   13  .0000E+00
14  .0000E+00   15  .0000E+00   16  .0000E+00
   17  .0000E+00   18  .0000E+00   19  .0000E+00   20  .0000E+00   21  .0000E+00
22  .0000E+00   23  .0000E+00   24  .0000E+00
                                                DAY OF WEEK = SUNDAY
    1  .0000E+00    2  .0000E+00    3  .0000E+00    4  .0000E+00    5  .0000E+00
6  .0000E+00    7  .0000E+00    8  .0000E+00
    9  .0000E+00   10  .0000E+00   11  .0000E+00   12  .0000E+00   13  .0000E+00
14  .0000E+00   15  .0000E+00   16  .0000E+00
   17  .0000E+00   18  .0000E+00   19  .0000E+00   20  .0000E+00   21  .0000E+00
22  .0000E+00   23  .0000E+00   24  .0000E+00
```

```
 *** AERMOD - VERSION 22112  ***   *** C:\Lakes\Project Files\Garvey\Garvey.isc
***        03/04/24
 *** AERMET - VERSION  16216 ***   ***
***        13:00:54

PAGE 241
 *** MODELOPTs:    RegDFAULT  CONC  ELEV  URBAN  ADJ_U*

                   * SOURCE EMISSION RATE SCALARS WHICH VARY DIURNALLY AND BY DAY
OF WEEK (HRDOW) *

 SOURCE ID = L0002017     ; SOURCE TYPE = VOLUME   :
  HOUR   SCALAR   HOUR   SCALAR   HOUR   SCALAR   HOUR   SCALAR   HOUR   SCALAR
HOUR   SCALAR   HOUR   SCALAR   HOUR   SCALAR
 - - - - - - - - - - - - - - - - - - - - - - - - - - - - - - - - - - - - - - - -
- - - - - - - - - - - - - - - - - - - - - - - - -
                                                DAY OF WEEK = WEEKDAY
    1  .0000E+00    2  .0000E+00    3  .0000E+00    4  .0000E+00    5  .0000E+00
6  .0000E+00    7  .1000E+01    8  .1000E+01
    9  .1000E+01   10  .1000E+01   11  .1000E+01   12  .1000E+01   13  .1000E+01
14  .1000E+01   15  .1000E+01   16  .1000E+01
   17  .0000E+00   18  .0000E+00   19  .0000E+00   20  .0000E+00   21  .0000E+00
22  .0000E+00   23  .0000E+00   24  .0000E+00
                                                DAY OF WEEK = SATURDAY
    1  .0000E+00    2  .0000E+00    3  .0000E+00    4  .0000E+00    5  .0000E+00
6  .0000E+00    7  .0000E+00    8  .0000E+00
    9  .0000E+00   10  .0000E+00   11  .0000E+00   12  .0000E+00   13  .0000E+00
14  .0000E+00   15  .0000E+00   16  .0000E+00
   17  .0000E+00   18  .0000E+00   19  .0000E+00   20  .0000E+00   21  .0000E+00
22  .0000E+00   23  .0000E+00   24  .0000E+00
                                                DAY OF WEEK = SUNDAY
    1  .0000E+00    2  .0000E+00    3  .0000E+00    4  .0000E+00    5  .0000E+00
6  .0000E+00    7  .0000E+00    8  .0000E+00
    9  .0000E+00   10  .0000E+00   11  .0000E+00   12  .0000E+00   13  .0000E+00
14  .0000E+00   15  .0000E+00   16  .0000E+00
   17  .0000E+00   18  .0000E+00   19  .0000E+00   20  .0000E+00   21  .0000E+00
22  .0000E+00   23  .0000E+00   24  .0000E+00
```

*** MODELOPTs: RegDFAULT CONC ELEV URBAN ADJ_U*

* SOURCE EMISSION RATE SCALARS WHICH VARY DIURNALLY AND BY DAY OF WEEK (HRDOW) *

SOURCE ID = L0002018 ; SOURCE TYPE = VOLUME :

HOUR	SCALAR	HOUR	SCALAR	HOUR	SCALAR	HOUR	SCALAR	HOUR	SCALAR	HOUR	SCALAR	HOUR	SCALAR	HOUR	SCALAR

DAY OF WEEK = WEEKDAY

1	.0000E+00	2	.0000E+00	3	.0000E+00	4	.0000E+00	5	.0000E+00	6	.0000E+00	7	.1000E+01	8	.1000E+01
9	.1000E+01	10	.1000E+01	11	.1000E+01	12	.1000E+01	13	.1000E+01	14	.1000E+01	15	.1000E+01	16	.1000E+01
17	.0000E+00	18	.0000E+00	19	.0000E+00	20	.0000E+00	21	.0000E+00	22	.0000E+00	23	.0000E+00	24	.0000E+00

DAY OF WEEK = SATURDAY

1	.0000E+00	2	.0000E+00	3	.0000E+00	4	.0000E+00	5	.0000E+00	6	.0000E+00	7	.0000E+00	8	.0000E+00
9	.0000E+00	10	.0000E+00	11	.0000E+00	12	.0000E+00	13	.0000E+00	14	.0000E+00	15	.0000E+00	16	.0000E+00
17	.0000E+00	18	.0000E+00	19	.0000E+00	20	.0000E+00	21	.0000E+00	22	.0000E+00	23	.0000E+00	24	.0000E+00

DAY OF WEEK = SUNDAY

1	.0000E+00	2	.0000E+00	3	.0000E+00	4	.0000E+00	5	.0000E+00	6	.0000E+00	7	.0000E+00	8	.0000E+00
9	.0000E+00	10	.0000E+00	11	.0000E+00	12	.0000E+00	13	.0000E+00	14	.0000E+00	15	.0000E+00	16	.0000E+00
17	.0000E+00	18	.0000E+00	19	.0000E+00	20	.0000E+00	21	.0000E+00	22	.0000E+00	23	.0000E+00	24	.0000E+00

```
 *** AERMOD - VERSION 22112  ***   *** C:\Lakes\Project Files\Garvey\Garvey.isc
***        03/04/24
 *** AERMET - VERSION  16216 ***   ***
***        13:00:54

PAGE 243
 *** MODELOPTs:    RegDFAULT  CONC  ELEV  URBAN  ADJ_U*

                   * SOURCE EMISSION RATE SCALARS WHICH VARY DIURNALLY AND BY DAY
OF WEEK (HRDOW) *

 SOURCE ID = L0002019     ; SOURCE TYPE = VOLUME   :
  HOUR   SCALAR   HOUR   SCALAR   HOUR   SCALAR   HOUR   SCALAR   HOUR   SCALAR
HOUR   SCALAR   HOUR   SCALAR   HOUR   SCALAR
 - - - - - - - - - - - - - - - - - - - - - - - - - - - - - - - - - - - - - - - -
- - - - - - - - - - - - - - - - - - - - - - - - -
                                                DAY OF WEEK = WEEKDAY
    1  .0000E+00    2  .0000E+00    3  .0000E+00    4  .0000E+00    5  .0000E+00
6  .0000E+00    7  .1000E+01    8  .1000E+01
    9  .1000E+01   10  .1000E+01   11  .1000E+01   12  .1000E+01   13  .1000E+01
14  .1000E+01   15  .1000E+01   16  .1000E+01
   17  .0000E+00   18  .0000E+00   19  .0000E+00   20  .0000E+00   21  .0000E+00
22  .0000E+00   23  .0000E+00   24  .0000E+00
                                                DAY OF WEEK = SATURDAY
    1  .0000E+00    2  .0000E+00    3  .0000E+00    4  .0000E+00    5  .0000E+00
6  .0000E+00    7  .0000E+00    8  .0000E+00
    9  .0000E+00   10  .0000E+00   11  .0000E+00   12  .0000E+00   13  .0000E+00
14  .0000E+00   15  .0000E+00   16  .0000E+00
   17  .0000E+00   18  .0000E+00   19  .0000E+00   20  .0000E+00   21  .0000E+00
22  .0000E+00   23  .0000E+00   24  .0000E+00
                                                DAY OF WEEK = SUNDAY
    1  .0000E+00    2  .0000E+00    3  .0000E+00    4  .0000E+00    5  .0000E+00
6  .0000E+00    7  .0000E+00    8  .0000E+00
    9  .0000E+00   10  .0000E+00   11  .0000E+00   12  .0000E+00   13  .0000E+00
14  .0000E+00   15  .0000E+00   16  .0000E+00
   17  .0000E+00   18  .0000E+00   19  .0000E+00   20  .0000E+00   21  .0000E+00
22  .0000E+00   23  .0000E+00   24  .0000E+00
```

*** MODELOPTs: RegDFAULT CONC ELEV URBAN ADJ_U*

* SOURCE EMISSION RATE SCALARS WHICH VARY DIURNALLY AND BY DAY OF WEEK (HRDOW) *

SOURCE ID = L0002020 ; SOURCE TYPE = VOLUME :

HOUR	SCALAR	HOUR	SCALAR	HOUR	SCALAR	HOUR	SCALAR	HOUR	SCALAR	HOUR	SCALAR	HOUR	SCALAR	HOUR	SCALAR

DAY OF WEEK = WEEKDAY

1	.0000E+00	2	.0000E+00	3	.0000E+00	4	.0000E+00	5	.0000E+00	6	.0000E+00	7	.1000E+01	8	.1000E+01
9	.1000E+01	10	.1000E+01	11	.1000E+01	12	.1000E+01	13	.1000E+01	14	.1000E+01	15	.1000E+01	16	.1000E+01
17	.0000E+00	18	.0000E+00	19	.0000E+00	20	.0000E+00	21	.0000E+00	22	.0000E+00	23	.0000E+00	24	.0000E+00

DAY OF WEEK = SATURDAY

1	.0000E+00	2	.0000E+00	3	.0000E+00	4	.0000E+00	5	.0000E+00	6	.0000E+00	7	.0000E+00	8	.0000E+00
9	.0000E+00	10	.0000E+00	11	.0000E+00	12	.0000E+00	13	.0000E+00	14	.0000E+00	15	.0000E+00	16	.0000E+00
17	.0000E+00	18	.0000E+00	19	.0000E+00	20	.0000E+00	21	.0000E+00	22	.0000E+00	23	.0000E+00	24	.0000E+00

DAY OF WEEK = SUNDAY

1	.0000E+00	2	.0000E+00	3	.0000E+00	4	.0000E+00	5	.0000E+00	6	.0000E+00	7	.0000E+00	8	.0000E+00
9	.0000E+00	10	.0000E+00	11	.0000E+00	12	.0000E+00	13	.0000E+00	14	.0000E+00	15	.0000E+00	16	.0000E+00
17	.0000E+00	18	.0000E+00	19	.0000E+00	20	.0000E+00	21	.0000E+00	22	.0000E+00	23	.0000E+00	24	.0000E+00

*** MODELOPTs: RegDFAULT CONC ELEV URBAN ADJ_U*

* SOURCE EMISSION RATE SCALARS WHICH VARY DIURNALLY AND BY DAY OF WEEK (HRDOW) *

SOURCE ID = L0002021 ; SOURCE TYPE = VOLUME :

HOUR	SCALAR	HOUR	SCALAR	HOUR	SCALAR	HOUR	SCALAR	HOUR	SCALAR	HOUR	SCALAR	HOUR	SCALAR	HOUR	SCALAR

DAY OF WEEK = WEEKDAY

1	.0000E+00	2	.0000E+00	3	.0000E+00	4	.0000E+00	5	.0000E+00	6	.0000E+00	7	.1000E+01	8	.1000E+01
9	.1000E+01	10	.1000E+01	11	.1000E+01	12	.1000E+01	13	.1000E+01	14	.1000E+01	15	.1000E+01	16	.1000E+01
17	.0000E+00	18	.0000E+00	19	.0000E+00	20	.0000E+00	21	.0000E+00	22	.0000E+00	23	.0000E+00	24	.0000E+00

DAY OF WEEK = SATURDAY

1	.0000E+00	2	.0000E+00	3	.0000E+00	4	.0000E+00	5	.0000E+00	6	.0000E+00	7	.0000E+00	8	.0000E+00
9	.0000E+00	10	.0000E+00	11	.0000E+00	12	.0000E+00	13	.0000E+00	14	.0000E+00	15	.0000E+00	16	.0000E+00
17	.0000E+00	18	.0000E+00	19	.0000E+00	20	.0000E+00	21	.0000E+00	22	.0000E+00	23	.0000E+00	24	.0000E+00

DAY OF WEEK = SUNDAY

1	.0000E+00	2	.0000E+00	3	.0000E+00	4	.0000E+00	5	.0000E+00	6	.0000E+00	7	.0000E+00	8	.0000E+00
9	.0000E+00	10	.0000E+00	11	.0000E+00	12	.0000E+00	13	.0000E+00	14	.0000E+00	15	.0000E+00	16	.0000E+00
17	.0000E+00	18	.0000E+00	19	.0000E+00	20	.0000E+00	21	.0000E+00	22	.0000E+00	23	.0000E+00	24	.0000E+00

*** MODELOPTs: RegDFAULT CONC ELEV URBAN ADJ_U*

* SOURCE EMISSION RATE SCALARS WHICH VARY DIURNALLY AND BY DAY OF WEEK (HRDOW) *

SOURCE ID = L0002022 ; SOURCE TYPE = VOLUME :

HOUR	SCALAR	HOUR	SCALAR	HOUR	SCALAR	HOUR	SCALAR	HOUR	SCALAR	HOUR	SCALAR	HOUR	SCALAR	HOUR	SCALAR

DAY OF WEEK = WEEKDAY

1	.0000E+00	2	.0000E+00	3	.0000E+00	4	.0000E+00	5	.0000E+00	6	.0000E+00	7	.1000E+01	8	.1000E+01
9	.1000E+01	10	.1000E+01	11	.1000E+01	12	.1000E+01	13	.1000E+01	14	.1000E+01	15	.1000E+01	16	.1000E+01
17	.0000E+00	18	.0000E+00	19	.0000E+00	20	.0000E+00	21	.0000E+00	22	.0000E+00	23	.0000E+00	24	.0000E+00

DAY OF WEEK = SATURDAY

1	.0000E+00	2	.0000E+00	3	.0000E+00	4	.0000E+00	5	.0000E+00	6	.0000E+00	7	.0000E+00	8	.0000E+00
9	.0000E+00	10	.0000E+00	11	.0000E+00	12	.0000E+00	13	.0000E+00	14	.0000E+00	15	.0000E+00	16	.0000E+00
17	.0000E+00	18	.0000E+00	19	.0000E+00	20	.0000E+00	21	.0000E+00	22	.0000E+00	23	.0000E+00	24	.0000E+00

DAY OF WEEK = SUNDAY

1	.0000E+00	2	.0000E+00	3	.0000E+00	4	.0000E+00	5	.0000E+00	6	.0000E+00	7	.0000E+00	8	.0000E+00
9	.0000E+00	10	.0000E+00	11	.0000E+00	12	.0000E+00	13	.0000E+00	14	.0000E+00	15	.0000E+00	16	.0000E+00
17	.0000E+00	18	.0000E+00	19	.0000E+00	20	.0000E+00	21	.0000E+00	22	.0000E+00	23	.0000E+00	24	.0000E+00

*** MODELOPTs: RegDFAULT CONC ELEV URBAN ADJ_U*

* SOURCE EMISSION RATE SCALARS WHICH VARY DIURNALLY AND BY DAY OF WEEK (HRDOW) *

SOURCE ID = L0002023 ; SOURCE TYPE = VOLUME :

HOUR	SCALAR	HOUR	SCALAR	HOUR	SCALAR	HOUR	SCALAR	HOUR	SCALAR	HOUR	SCALAR	HOUR	SCALAR	HOUR	SCALAR

DAY OF WEEK = WEEKDAY

1	.0000E+00	2	.0000E+00	3	.0000E+00	4	.0000E+00	5	.0000E+00	6	.0000E+00	7	.1000E+01	8	.1000E+01
9	.1000E+01	10	.1000E+01	11	.1000E+01	12	.1000E+01	13	.1000E+01	14	.1000E+01	15	.1000E+01	16	.1000E+01
17	.0000E+00	18	.0000E+00	19	.0000E+00	20	.0000E+00	21	.0000E+00	22	.0000E+00	23	.0000E+00	24	.0000E+00

DAY OF WEEK = SATURDAY

1	.0000E+00	2	.0000E+00	3	.0000E+00	4	.0000E+00	5	.0000E+00	6	.0000E+00	7	.0000E+00	8	.0000E+00
9	.0000E+00	10	.0000E+00	11	.0000E+00	12	.0000E+00	13	.0000E+00	14	.0000E+00	15	.0000E+00	16	.0000E+00
17	.0000E+00	18	.0000E+00	19	.0000E+00	20	.0000E+00	21	.0000E+00	22	.0000E+00	23	.0000E+00	24	.0000E+00

DAY OF WEEK = SUNDAY

1	.0000E+00	2	.0000E+00	3	.0000E+00	4	.0000E+00	5	.0000E+00	6	.0000E+00	7	.0000E+00	8	.0000E+00
9	.0000E+00	10	.0000E+00	11	.0000E+00	12	.0000E+00	13	.0000E+00	14	.0000E+00	15	.0000E+00	16	.0000E+00
17	.0000E+00	18	.0000E+00	19	.0000E+00	20	.0000E+00	21	.0000E+00	22	.0000E+00	23	.0000E+00	24	.0000E+00

*** MODELOPTs: RegDFAULT CONC ELEV URBAN ADJ_U*

* SOURCE EMISSION RATE SCALARS WHICH VARY DIURNALLY AND BY DAY OF WEEK (HRDOW) *

SOURCE ID = L0002024 ; SOURCE TYPE = VOLUME :

HOUR	SCALAR	HOUR	SCALAR	HOUR	SCALAR	HOUR	SCALAR	HOUR	SCALAR	HOUR	SCALAR	HOUR	SCALAR	HOUR	SCALAR

DAY OF WEEK = WEEKDAY

1	.0000E+00	2	.0000E+00	3	.0000E+00	4	.0000E+00	5	.0000E+00	6	.0000E+00	7	.1000E+01	8	.1000E+01
9	.1000E+01	10	.1000E+01	11	.1000E+01	12	.1000E+01	13	.1000E+01	14	.1000E+01	15	.1000E+01	16	.1000E+01
17	.0000E+00	18	.0000E+00	19	.0000E+00	20	.0000E+00	21	.0000E+00	22	.0000E+00	23	.0000E+00	24	.0000E+00

DAY OF WEEK = SATURDAY

1	.0000E+00	2	.0000E+00	3	.0000E+00	4	.0000E+00	5	.0000E+00	6	.0000E+00	7	.0000E+00	8	.0000E+00
9	.0000E+00	10	.0000E+00	11	.0000E+00	12	.0000E+00	13	.0000E+00	14	.0000E+00	15	.0000E+00	16	.0000E+00
17	.0000E+00	18	.0000E+00	19	.0000E+00	20	.0000E+00	21	.0000E+00	22	.0000E+00	23	.0000E+00	24	.0000E+00

DAY OF WEEK = SUNDAY

1	.0000E+00	2	.0000E+00	3	.0000E+00	4	.0000E+00	5	.0000E+00	6	.0000E+00	7	.0000E+00	8	.0000E+00
9	.0000E+00	10	.0000E+00	11	.0000E+00	12	.0000E+00	13	.0000E+00	14	.0000E+00	15	.0000E+00	16	.0000E+00
17	.0000E+00	18	.0000E+00	19	.0000E+00	20	.0000E+00	21	.0000E+00	22	.0000E+00	23	.0000E+00	24	.0000E+00

*** MODELOPTs: RegDFAULT CONC ELEV URBAN ADJ_U*

* SOURCE EMISSION RATE SCALARS WHICH VARY DIURNALLY AND BY DAY OF WEEK (HRDOW) *

SOURCE ID = L0002025 ; SOURCE TYPE = VOLUME :

HOUR	SCALAR	HOUR	SCALAR	HOUR	SCALAR	HOUR	SCALAR	HOUR	SCALAR	HOUR	SCALAR	HOUR	SCALAR	HOUR	SCALAR

DAY OF WEEK = WEEKDAY

1	.0000E+00	2	.0000E+00	3	.0000E+00	4	.0000E+00	5	.0000E+00	6	.0000E+00	7	.1000E+01	8	.1000E+01
9	.1000E+01	10	.1000E+01	11	.1000E+01	12	.1000E+01	13	.1000E+01	14	.1000E+01	15	.1000E+01	16	.1000E+01
17	.0000E+00	18	.0000E+00	19	.0000E+00	20	.0000E+00	21	.0000E+00	22	.0000E+00	23	.0000E+00	24	.0000E+00

DAY OF WEEK = SATURDAY

1	.0000E+00	2	.0000E+00	3	.0000E+00	4	.0000E+00	5	.0000E+00	6	.0000E+00	7	.0000E+00	8	.0000E+00
9	.0000E+00	10	.0000E+00	11	.0000E+00	12	.0000E+00	13	.0000E+00	14	.0000E+00	15	.0000E+00	16	.0000E+00
17	.0000E+00	18	.0000E+00	19	.0000E+00	20	.0000E+00	21	.0000E+00	22	.0000E+00	23	.0000E+00	24	.0000E+00

DAY OF WEEK = SUNDAY

1	.0000E+00	2	.0000E+00	3	.0000E+00	4	.0000E+00	5	.0000E+00	6	.0000E+00	7	.0000E+00	8	.0000E+00
9	.0000E+00	10	.0000E+00	11	.0000E+00	12	.0000E+00	13	.0000E+00	14	.0000E+00	15	.0000E+00	16	.0000E+00
17	.0000E+00	18	.0000E+00	19	.0000E+00	20	.0000E+00	21	.0000E+00	22	.0000E+00	23	.0000E+00	24	.0000E+00

```
 *** AERMOD - VERSION 22112  ***   *** C:\Lakes\Project Files\Garvey\Garvey.isc
***        03/04/24
 *** AERMET - VERSION  16216 ***   ***
***        13:00:54

PAGE 250
 *** MODELOPTs:    RegDFAULT  CONC  ELEV  URBAN  ADJ_U*

                   * SOURCE EMISSION RATE SCALARS WHICH VARY DIURNALLY AND BY DAY
OF WEEK (HRDOW) *

 SOURCE ID = L0002026     ; SOURCE TYPE = VOLUME   :
  HOUR   SCALAR   HOUR   SCALAR   HOUR   SCALAR   HOUR   SCALAR   HOUR   SCALAR
HOUR   SCALAR   HOUR   SCALAR   HOUR   SCALAR
 - - - - - - - - - - - - - - - - - - - - - - - - - - - - - - - - - - - - - - - -
- - - - - - - - - - - - - - - - - - - - - - - - -
                                                DAY OF WEEK = WEEKDAY
    1  .0000E+00    2  .0000E+00    3  .0000E+00    4  .0000E+00    5  .0000E+00
6  .0000E+00    7  .1000E+01    8  .1000E+01
    9  .1000E+01   10  .1000E+01   11  .1000E+01   12  .1000E+01   13  .1000E+01
14  .1000E+01   15  .1000E+01   16  .1000E+01
   17  .0000E+00   18  .0000E+00   19  .0000E+00   20  .0000E+00   21  .0000E+00
22  .0000E+00   23  .0000E+00   24  .0000E+00
                                                DAY OF WEEK = SATURDAY
    1  .0000E+00    2  .0000E+00    3  .0000E+00    4  .0000E+00    5  .0000E+00
6  .0000E+00    7  .0000E+00    8  .0000E+00
    9  .0000E+00   10  .0000E+00   11  .0000E+00   12  .0000E+00   13  .0000E+00
14  .0000E+00   15  .0000E+00   16  .0000E+00
   17  .0000E+00   18  .0000E+00   19  .0000E+00   20  .0000E+00   21  .0000E+00
22  .0000E+00   23  .0000E+00   24  .0000E+00
                                                DAY OF WEEK = SUNDAY
    1  .0000E+00    2  .0000E+00    3  .0000E+00    4  .0000E+00    5  .0000E+00
6  .0000E+00    7  .0000E+00    8  .0000E+00
    9  .0000E+00   10  .0000E+00   11  .0000E+00   12  .0000E+00   13  .0000E+00
14  .0000E+00   15  .0000E+00   16  .0000E+00
   17  .0000E+00   18  .0000E+00   19  .0000E+00   20  .0000E+00   21  .0000E+00
22  .0000E+00   23  .0000E+00   24  .0000E+00
```

*** MODELOPTs: RegDFAULT CONC ELEV URBAN ADJ_U*

* SOURCE EMISSION RATE SCALARS WHICH VARY DIURNALLY AND BY DAY OF WEEK (HRDOW) *

SOURCE ID = L0002027 ; SOURCE TYPE = VOLUME :

HOUR	SCALAR	HOUR	SCALAR	HOUR	SCALAR	HOUR	SCALAR	HOUR	SCALAR	HOUR	SCALAR	HOUR	SCALAR	HOUR	SCALAR

DAY OF WEEK = WEEKDAY

1	.0000E+00	2	.0000E+00	3	.0000E+00	4	.0000E+00	5	.0000E+00	6	.0000E+00	7	.1000E+01	8	.1000E+01
9	.1000E+01	10	.1000E+01	11	.1000E+01	12	.1000E+01	13	.1000E+01	14	.1000E+01	15	.1000E+01	16	.1000E+01
17	.0000E+00	18	.0000E+00	19	.0000E+00	20	.0000E+00	21	.0000E+00	22	.0000E+00	23	.0000E+00	24	.0000E+00

DAY OF WEEK = SATURDAY

1	.0000E+00	2	.0000E+00	3	.0000E+00	4	.0000E+00	5	.0000E+00	6	.0000E+00	7	.0000E+00	8	.0000E+00
9	.0000E+00	10	.0000E+00	11	.0000E+00	12	.0000E+00	13	.0000E+00	14	.0000E+00	15	.0000E+00	16	.0000E+00
17	.0000E+00	18	.0000E+00	19	.0000E+00	20	.0000E+00	21	.0000E+00	22	.0000E+00	23	.0000E+00	24	.0000E+00

DAY OF WEEK = SUNDAY

1	.0000E+00	2	.0000E+00	3	.0000E+00	4	.0000E+00	5	.0000E+00	6	.0000E+00	7	.0000E+00	8	.0000E+00
9	.0000E+00	10	.0000E+00	11	.0000E+00	12	.0000E+00	13	.0000E+00	14	.0000E+00	15	.0000E+00	16	.0000E+00
17	.0000E+00	18	.0000E+00	19	.0000E+00	20	.0000E+00	21	.0000E+00	22	.0000E+00	23	.0000E+00	24	.0000E+00

*** MODELOPTs: RegDFAULT CONC ELEV URBAN ADJ_U*

* SOURCE EMISSION RATE SCALARS WHICH VARY DIURNALLY AND BY DAY OF WEEK (HRDOW) *

SOURCE ID = L0002028 ; SOURCE TYPE = VOLUME :

HOUR	SCALAR	HOUR	SCALAR	HOUR	SCALAR	HOUR	SCALAR	HOUR	SCALAR	HOUR	SCALAR	HOUR	SCALAR	HOUR	SCALAR

DAY OF WEEK = WEEKDAY

1	.0000E+00	2	.0000E+00	3	.0000E+00	4	.0000E+00	5	.0000E+00	6	.0000E+00	7	.1000E+01	8	.1000E+01
9	.1000E+01	10	.1000E+01	11	.1000E+01	12	.1000E+01	13	.1000E+01	14	.1000E+01	15	.1000E+01	16	.1000E+01
17	.0000E+00	18	.0000E+00	19	.0000E+00	20	.0000E+00	21	.0000E+00	22	.0000E+00	23	.0000E+00	24	.0000E+00

DAY OF WEEK = SATURDAY

1	.0000E+00	2	.0000E+00	3	.0000E+00	4	.0000E+00	5	.0000E+00	6	.0000E+00	7	.0000E+00	8	.0000E+00
9	.0000E+00	10	.0000E+00	11	.0000E+00	12	.0000E+00	13	.0000E+00	14	.0000E+00	15	.0000E+00	16	.0000E+00
17	.0000E+00	18	.0000E+00	19	.0000E+00	20	.0000E+00	21	.0000E+00	22	.0000E+00	23	.0000E+00	24	.0000E+00

DAY OF WEEK = SUNDAY

1	.0000E+00	2	.0000E+00	3	.0000E+00	4	.0000E+00	5	.0000E+00	6	.0000E+00	7	.0000E+00	8	.0000E+00
9	.0000E+00	10	.0000E+00	11	.0000E+00	12	.0000E+00	13	.0000E+00	14	.0000E+00	15	.0000E+00	16	.0000E+00
17	.0000E+00	18	.0000E+00	19	.0000E+00	20	.0000E+00	21	.0000E+00	22	.0000E+00	23	.0000E+00	24	.0000E+00

```
 *** AERMOD - VERSION 22112  ***   *** C:\Lakes\Project Files\Garvey\Garvey.isc
***        03/04/24
 *** AERMET - VERSION  16216 ***   ***
***        13:00:54

PAGE 253
 *** MODELOPTs:    RegDFAULT  CONC  ELEV  URBAN  ADJ_U*

                   * SOURCE EMISSION RATE SCALARS WHICH VARY DIURNALLY AND BY DAY
OF WEEK (HRDOW) *

 SOURCE ID = L0002029     ; SOURCE TYPE = VOLUME   :
  HOUR   SCALAR   HOUR   SCALAR   HOUR   SCALAR   HOUR   SCALAR   HOUR   SCALAR
HOUR   SCALAR   HOUR   SCALAR   HOUR   SCALAR
 - - - - - - - - - - - - - - - - - - - - - - - - - - - - - - - - - - - - - - - -
- - - - - - - - - - - - - - - - - - - - - - - - -
                                                DAY OF WEEK = WEEKDAY
    1  .0000E+00    2  .0000E+00    3  .0000E+00    4  .0000E+00    5  .0000E+00
6  .0000E+00    7  .1000E+01    8  .1000E+01
    9  .1000E+01   10  .1000E+01   11  .1000E+01   12  .1000E+01   13  .1000E+01
14  .1000E+01   15  .1000E+01   16  .1000E+01
   17  .0000E+00   18  .0000E+00   19  .0000E+00   20  .0000E+00   21  .0000E+00
22  .0000E+00   23  .0000E+00   24  .0000E+00
                                                DAY OF WEEK = SATURDAY
    1  .0000E+00    2  .0000E+00    3  .0000E+00    4  .0000E+00    5  .0000E+00
6  .0000E+00    7  .0000E+00    8  .0000E+00
    9  .0000E+00   10  .0000E+00   11  .0000E+00   12  .0000E+00   13  .0000E+00
14  .0000E+00   15  .0000E+00   16  .0000E+00
   17  .0000E+00   18  .0000E+00   19  .0000E+00   20  .0000E+00   21  .0000E+00
22  .0000E+00   23  .0000E+00   24  .0000E+00
                                                DAY OF WEEK = SUNDAY
    1  .0000E+00    2  .0000E+00    3  .0000E+00    4  .0000E+00    5  .0000E+00
6  .0000E+00    7  .0000E+00    8  .0000E+00
    9  .0000E+00   10  .0000E+00   11  .0000E+00   12  .0000E+00   13  .0000E+00
14  .0000E+00   15  .0000E+00   16  .0000E+00
   17  .0000E+00   18  .0000E+00   19  .0000E+00   20  .0000E+00   21  .0000E+00
22  .0000E+00   23  .0000E+00   24  .0000E+00
```

*** MODELOPTs: RegDFAULT CONC ELEV URBAN ADJ_U*

* SOURCE EMISSION RATE SCALARS WHICH VARY DIURNALLY AND BY DAY OF WEEK (HRDOW) *

SOURCE ID = L0002030 ; SOURCE TYPE = VOLUME :

HOUR	SCALAR	HOUR	SCALAR	HOUR	SCALAR	HOUR	SCALAR	HOUR	SCALAR	HOUR	SCALAR	HOUR	SCALAR	HOUR	SCALAR

DAY OF WEEK = WEEKDAY

1	.0000E+00	2	.0000E+00	3	.0000E+00	4	.0000E+00	5	.0000E+00	6	.0000E+00	7	.1000E+01	8	.1000E+01
9	.1000E+01	10	.1000E+01	11	.1000E+01	12	.1000E+01	13	.1000E+01	14	.1000E+01	15	.1000E+01	16	.1000E+01
17	.0000E+00	18	.0000E+00	19	.0000E+00	20	.0000E+00	21	.0000E+00	22	.0000E+00	23	.0000E+00	24	.0000E+00

DAY OF WEEK = SATURDAY

1	.0000E+00	2	.0000E+00	3	.0000E+00	4	.0000E+00	5	.0000E+00	6	.0000E+00	7	.0000E+00	8	.0000E+00
9	.0000E+00	10	.0000E+00	11	.0000E+00	12	.0000E+00	13	.0000E+00	14	.0000E+00	15	.0000E+00	16	.0000E+00
17	.0000E+00	18	.0000E+00	19	.0000E+00	20	.0000E+00	21	.0000E+00	22	.0000E+00	23	.0000E+00	24	.0000E+00

DAY OF WEEK = SUNDAY

1	.0000E+00	2	.0000E+00	3	.0000E+00	4	.0000E+00	5	.0000E+00	6	.0000E+00	7	.0000E+00	8	.0000E+00
9	.0000E+00	10	.0000E+00	11	.0000E+00	12	.0000E+00	13	.0000E+00	14	.0000E+00	15	.0000E+00	16	.0000E+00
17	.0000E+00	18	.0000E+00	19	.0000E+00	20	.0000E+00	21	.0000E+00	22	.0000E+00	23	.0000E+00	24	.0000E+00

*** MODELOPTs: RegDFAULT CONC ELEV URBAN ADJ_U*

* SOURCE EMISSION RATE SCALARS WHICH VARY DIURNALLY AND BY DAY OF WEEK (HRDOW) *

SOURCE ID = L0002031 ; SOURCE TYPE = VOLUME :

HOUR	SCALAR	HOUR	SCALAR	HOUR	SCALAR	HOUR	SCALAR	HOUR	SCALAR	HOUR	SCALAR	HOUR	SCALAR	HOUR	SCALAR

DAY OF WEEK = WEEKDAY

1	.0000E+00	2	.0000E+00	3	.0000E+00	4	.0000E+00	5	.0000E+00	6	.0000E+00	7	.1000E+01	8	.1000E+01
9	.1000E+01	10	.1000E+01	11	.1000E+01	12	.1000E+01	13	.1000E+01	14	.1000E+01	15	.1000E+01	16	.1000E+01
17	.0000E+00	18	.0000E+00	19	.0000E+00	20	.0000E+00	21	.0000E+00	22	.0000E+00	23	.0000E+00	24	.0000E+00

DAY OF WEEK = SATURDAY

1	.0000E+00	2	.0000E+00	3	.0000E+00	4	.0000E+00	5	.0000E+00	6	.0000E+00	7	.0000E+00	8	.0000E+00
9	.0000E+00	10	.0000E+00	11	.0000E+00	12	.0000E+00	13	.0000E+00	14	.0000E+00	15	.0000E+00	16	.0000E+00
17	.0000E+00	18	.0000E+00	19	.0000E+00	20	.0000E+00	21	.0000E+00	22	.0000E+00	23	.0000E+00	24	.0000E+00

DAY OF WEEK = SUNDAY

1	.0000E+00	2	.0000E+00	3	.0000E+00	4	.0000E+00	5	.0000E+00	6	.0000E+00	7	.0000E+00	8	.0000E+00
9	.0000E+00	10	.0000E+00	11	.0000E+00	12	.0000E+00	13	.0000E+00	14	.0000E+00	15	.0000E+00	16	.0000E+00
17	.0000E+00	18	.0000E+00	19	.0000E+00	20	.0000E+00	21	.0000E+00	22	.0000E+00	23	.0000E+00	24	.0000E+00

*** MODELOPTs: RegDFAULT CONC ELEV URBAN ADJ_U*

* SOURCE EMISSION RATE SCALARS WHICH VARY DIURNALLY AND BY DAY OF WEEK (HRDOW) *

SOURCE ID = L0002032 ; SOURCE TYPE = VOLUME :

HOUR	SCALAR	HOUR	SCALAR	HOUR	SCALAR	HOUR	SCALAR	HOUR	SCALAR	HOUR	SCALAR	HOUR	SCALAR	HOUR	SCALAR

DAY OF WEEK = WEEKDAY

1	.0000E+00	2	.0000E+00	3	.0000E+00	4	.0000E+00	5	.0000E+00	6	.0000E+00	7	.1000E+01	8	.1000E+01
9	.1000E+01	10	.1000E+01	11	.1000E+01	12	.1000E+01	13	.1000E+01	14	.1000E+01	15	.1000E+01	16	.1000E+01
17	.0000E+00	18	.0000E+00	19	.0000E+00	20	.0000E+00	21	.0000E+00	22	.0000E+00	23	.0000E+00	24	.0000E+00

DAY OF WEEK = SATURDAY

1	.0000E+00	2	.0000E+00	3	.0000E+00	4	.0000E+00	5	.0000E+00	6	.0000E+00	7	.0000E+00	8	.0000E+00
9	.0000E+00	10	.0000E+00	11	.0000E+00	12	.0000E+00	13	.0000E+00	14	.0000E+00	15	.0000E+00	16	.0000E+00
17	.0000E+00	18	.0000E+00	19	.0000E+00	20	.0000E+00	21	.0000E+00	22	.0000E+00	23	.0000E+00	24	.0000E+00

DAY OF WEEK = SUNDAY

1	.0000E+00	2	.0000E+00	3	.0000E+00	4	.0000E+00	5	.0000E+00	6	.0000E+00	7	.0000E+00	8	.0000E+00
9	.0000E+00	10	.0000E+00	11	.0000E+00	12	.0000E+00	13	.0000E+00	14	.0000E+00	15	.0000E+00	16	.0000E+00
17	.0000E+00	18	.0000E+00	19	.0000E+00	20	.0000E+00	21	.0000E+00	22	.0000E+00	23	.0000E+00	24	.0000E+00

*** MODELOPTs: RegDFAULT CONC ELEV URBAN ADJ_U*

* SOURCE EMISSION RATE SCALARS WHICH VARY DIURNALLY AND BY DAY OF WEEK (HRDOW) *

SOURCE ID = L0002033 ; SOURCE TYPE = VOLUME :

HOUR	SCALAR	HOUR	SCALAR	HOUR	SCALAR	HOUR	SCALAR	HOUR	SCALAR	HOUR	SCALAR	HOUR	SCALAR	HOUR	SCALAR

DAY OF WEEK = WEEKDAY

1	.0000E+00	2	.0000E+00	3	.0000E+00	4	.0000E+00	5	.0000E+00	6	.0000E+00	7	.1000E+01	8	.1000E+01
9	.1000E+01	10	.1000E+01	11	.1000E+01	12	.1000E+01	13	.1000E+01	14	.1000E+01	15	.1000E+01	16	.1000E+01
17	.0000E+00	18	.0000E+00	19	.0000E+00	20	.0000E+00	21	.0000E+00	22	.0000E+00	23	.0000E+00	24	.0000E+00

DAY OF WEEK = SATURDAY

1	.0000E+00	2	.0000E+00	3	.0000E+00	4	.0000E+00	5	.0000E+00	6	.0000E+00	7	.0000E+00	8	.0000E+00
9	.0000E+00	10	.0000E+00	11	.0000E+00	12	.0000E+00	13	.0000E+00	14	.0000E+00	15	.0000E+00	16	.0000E+00
17	.0000E+00	18	.0000E+00	19	.0000E+00	20	.0000E+00	21	.0000E+00	22	.0000E+00	23	.0000E+00	24	.0000E+00

DAY OF WEEK = SUNDAY

1	.0000E+00	2	.0000E+00	3	.0000E+00	4	.0000E+00	5	.0000E+00	6	.0000E+00	7	.0000E+00	8	.0000E+00
9	.0000E+00	10	.0000E+00	11	.0000E+00	12	.0000E+00	13	.0000E+00	14	.0000E+00	15	.0000E+00	16	.0000E+00
17	.0000E+00	18	.0000E+00	19	.0000E+00	20	.0000E+00	21	.0000E+00	22	.0000E+00	23	.0000E+00	24	.0000E+00

*** MODELOPTs: RegDFAULT CONC ELEV URBAN ADJ_U*

* SOURCE EMISSION RATE SCALARS WHICH VARY DIURNALLY AND BY DAY OF WEEK (HRDOW) *

SOURCE ID = L0002034 ; SOURCE TYPE = VOLUME :

HOUR	SCALAR	HOUR	SCALAR	HOUR	SCALAR	HOUR	SCALAR	HOUR	SCALAR	HOUR	SCALAR	HOUR	SCALAR	HOUR	SCALAR

DAY OF WEEK = WEEKDAY

1	.0000E+00	2	.0000E+00	3	.0000E+00	4	.0000E+00	5	.0000E+00	6	.0000E+00	7	.1000E+01	8	.1000E+01
9	.1000E+01	10	.1000E+01	11	.1000E+01	12	.1000E+01	13	.1000E+01	14	.1000E+01	15	.1000E+01	16	.1000E+01
17	.0000E+00	18	.0000E+00	19	.0000E+00	20	.0000E+00	21	.0000E+00	22	.0000E+00	23	.0000E+00	24	.0000E+00

DAY OF WEEK = SATURDAY

1	.0000E+00	2	.0000E+00	3	.0000E+00	4	.0000E+00	5	.0000E+00	6	.0000E+00	7	.0000E+00	8	.0000E+00
9	.0000E+00	10	.0000E+00	11	.0000E+00	12	.0000E+00	13	.0000E+00	14	.0000E+00	15	.0000E+00	16	.0000E+00
17	.0000E+00	18	.0000E+00	19	.0000E+00	20	.0000E+00	21	.0000E+00	22	.0000E+00	23	.0000E+00	24	.0000E+00

DAY OF WEEK = SUNDAY

1	.0000E+00	2	.0000E+00	3	.0000E+00	4	.0000E+00	5	.0000E+00	6	.0000E+00	7	.0000E+00	8	.0000E+00
9	.0000E+00	10	.0000E+00	11	.0000E+00	12	.0000E+00	13	.0000E+00	14	.0000E+00	15	.0000E+00	16	.0000E+00
17	.0000E+00	18	.0000E+00	19	.0000E+00	20	.0000E+00	21	.0000E+00	22	.0000E+00	23	.0000E+00	24	.0000E+00

*** MODELOPTs: RegDFAULT CONC ELEV URBAN ADJ_U*

* SOURCE EMISSION RATE SCALARS WHICH VARY DIURNALLY AND BY DAY OF WEEK (HRDOW) *

SOURCE ID = L0002035 ; SOURCE TYPE = VOLUME :

HOUR	SCALAR	HOUR	SCALAR	HOUR	SCALAR	HOUR	SCALAR	HOUR	SCALAR	HOUR	SCALAR	HOUR	SCALAR	HOUR	SCALAR

DAY OF WEEK = WEEKDAY

1	.0000E+00	2	.0000E+00	3	.0000E+00	4	.0000E+00	5	.0000E+00	6	.0000E+00	7	.1000E+01	8	.1000E+01
9	.1000E+01	10	.1000E+01	11	.1000E+01	12	.1000E+01	13	.1000E+01	14	.1000E+01	15	.1000E+01	16	.1000E+01
17	.0000E+00	18	.0000E+00	19	.0000E+00	20	.0000E+00	21	.0000E+00	22	.0000E+00	23	.0000E+00	24	.0000E+00

DAY OF WEEK = SATURDAY

1	.0000E+00	2	.0000E+00	3	.0000E+00	4	.0000E+00	5	.0000E+00	6	.0000E+00	7	.0000E+00	8	.0000E+00
9	.0000E+00	10	.0000E+00	11	.0000E+00	12	.0000E+00	13	.0000E+00	14	.0000E+00	15	.0000E+00	16	.0000E+00
17	.0000E+00	18	.0000E+00	19	.0000E+00	20	.0000E+00	21	.0000E+00	22	.0000E+00	23	.0000E+00	24	.0000E+00

DAY OF WEEK = SUNDAY

1	.0000E+00	2	.0000E+00	3	.0000E+00	4	.0000E+00	5	.0000E+00	6	.0000E+00	7	.0000E+00	8	.0000E+00
9	.0000E+00	10	.0000E+00	11	.0000E+00	12	.0000E+00	13	.0000E+00	14	.0000E+00	15	.0000E+00	16	.0000E+00
17	.0000E+00	18	.0000E+00	19	.0000E+00	20	.0000E+00	21	.0000E+00	22	.0000E+00	23	.0000E+00	24	.0000E+00

*** MODELOPTs: RegDFAULT CONC ELEV URBAN ADJ_U*

* SOURCE EMISSION RATE SCALARS WHICH VARY DIURNALLY AND BY DAY OF WEEK (HRDOW) *

SOURCE ID = L0002036 ; SOURCE TYPE = VOLUME :

HOUR	SCALAR	HOUR	SCALAR	HOUR	SCALAR	HOUR	SCALAR	HOUR	SCALAR	HOUR	SCALAR	HOUR	SCALAR	HOUR	SCALAR

DAY OF WEEK = WEEKDAY

1	.0000E+00	2	.0000E+00	3	.0000E+00	4	.0000E+00	5	.0000E+00	6	.0000E+00	7	.1000E+01	8	.1000E+01
9	.1000E+01	10	.1000E+01	11	.1000E+01	12	.1000E+01	13	.1000E+01	14	.1000E+01	15	.1000E+01	16	.1000E+01
17	.0000E+00	18	.0000E+00	19	.0000E+00	20	.0000E+00	21	.0000E+00	22	.0000E+00	23	.0000E+00	24	.0000E+00

DAY OF WEEK = SATURDAY

1	.0000E+00	2	.0000E+00	3	.0000E+00	4	.0000E+00	5	.0000E+00	6	.0000E+00	7	.0000E+00	8	.0000E+00
9	.0000E+00	10	.0000E+00	11	.0000E+00	12	.0000E+00	13	.0000E+00	14	.0000E+00	15	.0000E+00	16	.0000E+00
17	.0000E+00	18	.0000E+00	19	.0000E+00	20	.0000E+00	21	.0000E+00	22	.0000E+00	23	.0000E+00	24	.0000E+00

DAY OF WEEK = SUNDAY

1	.0000E+00	2	.0000E+00	3	.0000E+00	4	.0000E+00	5	.0000E+00	6	.0000E+00	7	.0000E+00	8	.0000E+00
9	.0000E+00	10	.0000E+00	11	.0000E+00	12	.0000E+00	13	.0000E+00	14	.0000E+00	15	.0000E+00	16	.0000E+00
17	.0000E+00	18	.0000E+00	19	.0000E+00	20	.0000E+00	21	.0000E+00	22	.0000E+00	23	.0000E+00	24	.0000E+00

*** MODELOPTs: RegDFAULT CONC ELEV URBAN ADJ_U*

* SOURCE EMISSION RATE SCALARS WHICH VARY DIURNALLY AND BY DAY OF WEEK (HRDOW) *

SOURCE ID = L0002037 ; SOURCE TYPE = VOLUME :

HOUR	SCALAR	HOUR	SCALAR	HOUR	SCALAR	HOUR	SCALAR	HOUR	SCALAR	HOUR	SCALAR	HOUR	SCALAR	HOUR	SCALAR

DAY OF WEEK = WEEKDAY

1	.0000E+00	2	.0000E+00	3	.0000E+00	4	.0000E+00	5	.0000E+00	6	.0000E+00	7	.1000E+01	8	.1000E+01
9	.1000E+01	10	.1000E+01	11	.1000E+01	12	.1000E+01	13	.1000E+01	14	.1000E+01	15	.1000E+01	16	.1000E+01
17	.0000E+00	18	.0000E+00	19	.0000E+00	20	.0000E+00	21	.0000E+00	22	.0000E+00	23	.0000E+00	24	.0000E+00

DAY OF WEEK = SATURDAY

1	.0000E+00	2	.0000E+00	3	.0000E+00	4	.0000E+00	5	.0000E+00	6	.0000E+00	7	.0000E+00	8	.0000E+00
9	.0000E+00	10	.0000E+00	11	.0000E+00	12	.0000E+00	13	.0000E+00	14	.0000E+00	15	.0000E+00	16	.0000E+00
17	.0000E+00	18	.0000E+00	19	.0000E+00	20	.0000E+00	21	.0000E+00	22	.0000E+00	23	.0000E+00	24	.0000E+00

DAY OF WEEK = SUNDAY

1	.0000E+00	2	.0000E+00	3	.0000E+00	4	.0000E+00	5	.0000E+00	6	.0000E+00	7	.0000E+00	8	.0000E+00
9	.0000E+00	10	.0000E+00	11	.0000E+00	12	.0000E+00	13	.0000E+00	14	.0000E+00	15	.0000E+00	16	.0000E+00
17	.0000E+00	18	.0000E+00	19	.0000E+00	20	.0000E+00	21	.0000E+00	22	.0000E+00	23	.0000E+00	24	.0000E+00

*** MODELOPTs: RegDFAULT CONC ELEV URBAN ADJ_U*

* SOURCE EMISSION RATE SCALARS WHICH VARY DIURNALLY AND BY DAY OF WEEK (HRDOW) *

SOURCE ID = L0002038 ; SOURCE TYPE = VOLUME :

HOUR	SCALAR	HOUR	SCALAR	HOUR	SCALAR	HOUR	SCALAR	HOUR	SCALAR	HOUR	SCALAR	HOUR	SCALAR	HOUR	SCALAR

DAY OF WEEK = WEEKDAY

1	.0000E+00	2	.0000E+00	3	.0000E+00	4	.0000E+00	5	.0000E+00	6	.0000E+00	7	.1000E+01	8	.1000E+01
9	.1000E+01	10	.1000E+01	11	.1000E+01	12	.1000E+01	13	.1000E+01	14	.1000E+01	15	.1000E+01	16	.1000E+01
17	.0000E+00	18	.0000E+00	19	.0000E+00	20	.0000E+00	21	.0000E+00	22	.0000E+00	23	.0000E+00	24	.0000E+00

DAY OF WEEK = SATURDAY

1	.0000E+00	2	.0000E+00	3	.0000E+00	4	.0000E+00	5	.0000E+00	6	.0000E+00	7	.0000E+00	8	.0000E+00
9	.0000E+00	10	.0000E+00	11	.0000E+00	12	.0000E+00	13	.0000E+00	14	.0000E+00	15	.0000E+00	16	.0000E+00
17	.0000E+00	18	.0000E+00	19	.0000E+00	20	.0000E+00	21	.0000E+00	22	.0000E+00	23	.0000E+00	24	.0000E+00

DAY OF WEEK = SUNDAY

1	.0000E+00	2	.0000E+00	3	.0000E+00	4	.0000E+00	5	.0000E+00	6	.0000E+00	7	.0000E+00	8	.0000E+00
9	.0000E+00	10	.0000E+00	11	.0000E+00	12	.0000E+00	13	.0000E+00	14	.0000E+00	15	.0000E+00	16	.0000E+00
17	.0000E+00	18	.0000E+00	19	.0000E+00	20	.0000E+00	21	.0000E+00	22	.0000E+00	23	.0000E+00	24	.0000E+00

*** MODELOPTs: RegDFAULT CONC ELEV URBAN ADJ_U*

* SOURCE EMISSION RATE SCALARS WHICH VARY DIURNALLY AND BY DAY OF WEEK (HRDOW) *

SOURCE ID = L0002039 ; SOURCE TYPE = VOLUME :

HOUR	SCALAR	HOUR	SCALAR	HOUR	SCALAR	HOUR	SCALAR	HOUR	SCALAR	HOUR	SCALAR	HOUR	SCALAR	HOUR	SCALAR

DAY OF WEEK = WEEKDAY

1	.0000E+00	2	.0000E+00	3	.0000E+00	4	.0000E+00	5	.0000E+00	6	.0000E+00	7	.1000E+01	8	.1000E+01
9	.1000E+01	10	.1000E+01	11	.1000E+01	12	.1000E+01	13	.1000E+01	14	.1000E+01	15	.1000E+01	16	.1000E+01
17	.0000E+00	18	.0000E+00	19	.0000E+00	20	.0000E+00	21	.0000E+00	22	.0000E+00	23	.0000E+00	24	.0000E+00

DAY OF WEEK = SATURDAY

1	.0000E+00	2	.0000E+00	3	.0000E+00	4	.0000E+00	5	.0000E+00	6	.0000E+00	7	.0000E+00	8	.0000E+00
9	.0000E+00	10	.0000E+00	11	.0000E+00	12	.0000E+00	13	.0000E+00	14	.0000E+00	15	.0000E+00	16	.0000E+00
17	.0000E+00	18	.0000E+00	19	.0000E+00	20	.0000E+00	21	.0000E+00	22	.0000E+00	23	.0000E+00	24	.0000E+00

DAY OF WEEK = SUNDAY

1	.0000E+00	2	.0000E+00	3	.0000E+00	4	.0000E+00	5	.0000E+00	6	.0000E+00	7	.0000E+00	8	.0000E+00
9	.0000E+00	10	.0000E+00	11	.0000E+00	12	.0000E+00	13	.0000E+00	14	.0000E+00	15	.0000E+00	16	.0000E+00
17	.0000E+00	18	.0000E+00	19	.0000E+00	20	.0000E+00	21	.0000E+00	22	.0000E+00	23	.0000E+00	24	.0000E+00

```
 *** AERMOD - VERSION 22112  ***   *** C:\Lakes\Project Files\Garvey\Garvey.isc
***        03/04/24
 *** AERMET - VERSION  16216 ***   ***
***        13:00:54

PAGE 264
 *** MODELOPTs:    RegDFAULT  CONC  ELEV  URBAN  ADJ_U*

                   * SOURCE EMISSION RATE SCALARS WHICH VARY DIURNALLY AND BY DAY
OF WEEK (HRDOW) *

 SOURCE ID = L0002040     ; SOURCE TYPE = VOLUME   :
  HOUR   SCALAR   HOUR   SCALAR   HOUR   SCALAR   HOUR   SCALAR   HOUR   SCALAR
HOUR   SCALAR   HOUR   SCALAR   HOUR   SCALAR
 - - - - - - - - - - - - - - - - - - - - - - - - - - - - - - - - - - - - - - - -
- - - - - - - - - - - - - - - - - - - - - - - - -
                                                DAY OF WEEK = WEEKDAY
    1  .0000E+00    2  .0000E+00    3  .0000E+00    4  .0000E+00    5  .0000E+00
6  .0000E+00    7  .1000E+01    8  .1000E+01
    9  .1000E+01   10  .1000E+01   11  .1000E+01   12  .1000E+01   13  .1000E+01
14  .1000E+01   15  .1000E+01   16  .1000E+01
   17  .0000E+00   18  .0000E+00   19  .0000E+00   20  .0000E+00   21  .0000E+00
22  .0000E+00   23  .0000E+00   24  .0000E+00
                                                DAY OF WEEK = SATURDAY
    1  .0000E+00    2  .0000E+00    3  .0000E+00    4  .0000E+00    5  .0000E+00
6  .0000E+00    7  .0000E+00    8  .0000E+00
    9  .0000E+00   10  .0000E+00   11  .0000E+00   12  .0000E+00   13  .0000E+00
14  .0000E+00   15  .0000E+00   16  .0000E+00
   17  .0000E+00   18  .0000E+00   19  .0000E+00   20  .0000E+00   21  .0000E+00
22  .0000E+00   23  .0000E+00   24  .0000E+00
                                                DAY OF WEEK = SUNDAY
    1  .0000E+00    2  .0000E+00    3  .0000E+00    4  .0000E+00    5  .0000E+00
6  .0000E+00    7  .0000E+00    8  .0000E+00
    9  .0000E+00   10  .0000E+00   11  .0000E+00   12  .0000E+00   13  .0000E+00
14  .0000E+00   15  .0000E+00   16  .0000E+00
   17  .0000E+00   18  .0000E+00   19  .0000E+00   20  .0000E+00   21  .0000E+00
22  .0000E+00   23  .0000E+00   24  .0000E+00
```

```
 *** AERMOD - VERSION 22112  ***   *** C:\Lakes\Project Files\Garvey\Garvey.isc
***        03/04/24
 *** AERMET - VERSION  16216 ***   ***
***        13:00:54

PAGE 265
 *** MODELOPTs:    RegDFAULT  CONC  ELEV  URBAN  ADJ_U*

                   * SOURCE EMISSION RATE SCALARS WHICH VARY DIURNALLY AND BY DAY
OF WEEK (HRDOW) *

 SOURCE ID = L0002041     ; SOURCE TYPE = VOLUME   :
  HOUR   SCALAR   HOUR   SCALAR   HOUR   SCALAR   HOUR   SCALAR   HOUR   SCALAR
HOUR   SCALAR   HOUR   SCALAR   HOUR   SCALAR
 - - - - - - - - - - - - - - - - - - - - - - - - - - - - - - - - - - - - - - - -
- - - - - - - - - - - - - - - - - - - - - - - - -
                                                DAY OF WEEK = WEEKDAY
    1  .0000E+00    2  .0000E+00    3  .0000E+00    4  .0000E+00    5  .0000E+00
6  .0000E+00    7  .1000E+01    8  .1000E+01
    9  .1000E+01   10  .1000E+01   11  .1000E+01   12  .1000E+01   13  .1000E+01
14  .1000E+01   15  .1000E+01   16  .1000E+01
   17  .0000E+00   18  .0000E+00   19  .0000E+00   20  .0000E+00   21  .0000E+00
22  .0000E+00   23  .0000E+00   24  .0000E+00
                                                DAY OF WEEK = SATURDAY
    1  .0000E+00    2  .0000E+00    3  .0000E+00    4  .0000E+00    5  .0000E+00
6  .0000E+00    7  .0000E+00    8  .0000E+00
    9  .0000E+00   10  .0000E+00   11  .0000E+00   12  .0000E+00   13  .0000E+00
14  .0000E+00   15  .0000E+00   16  .0000E+00
   17  .0000E+00   18  .0000E+00   19  .0000E+00   20  .0000E+00   21  .0000E+00
22  .0000E+00   23  .0000E+00   24  .0000E+00
                                                DAY OF WEEK = SUNDAY
    1  .0000E+00    2  .0000E+00    3  .0000E+00    4  .0000E+00    5  .0000E+00
6  .0000E+00    7  .0000E+00    8  .0000E+00
    9  .0000E+00   10  .0000E+00   11  .0000E+00   12  .0000E+00   13  .0000E+00
14  .0000E+00   15  .0000E+00   16  .0000E+00
   17  .0000E+00   18  .0000E+00   19  .0000E+00   20  .0000E+00   21  .0000E+00
22  .0000E+00   23  .0000E+00   24  .0000E+00
```

*** MODELOPTs: RegDFAULT CONC ELEV URBAN ADJ_U*

* SOURCE EMISSION RATE SCALARS WHICH VARY DIURNALLY AND BY DAY OF WEEK (HRDOW) *

SOURCE ID = L0002042 ; SOURCE TYPE = VOLUME :

HOUR	SCALAR	HOUR	SCALAR	HOUR	SCALAR	HOUR	SCALAR	HOUR	SCALAR	HOUR	SCALAR	HOUR	SCALAR	HOUR	SCALAR

DAY OF WEEK = WEEKDAY

1	.0000E+00	2	.0000E+00	3	.0000E+00	4	.0000E+00	5	.0000E+00	6	.0000E+00	7	.1000E+01	8	.1000E+01
9	.1000E+01	10	.1000E+01	11	.1000E+01	12	.1000E+01	13	.1000E+01	14	.1000E+01	15	.1000E+01	16	.1000E+01
17	.0000E+00	18	.0000E+00	19	.0000E+00	20	.0000E+00	21	.0000E+00	22	.0000E+00	23	.0000E+00	24	.0000E+00

DAY OF WEEK = SATURDAY

1	.0000E+00	2	.0000E+00	3	.0000E+00	4	.0000E+00	5	.0000E+00	6	.0000E+00	7	.0000E+00	8	.0000E+00
9	.0000E+00	10	.0000E+00	11	.0000E+00	12	.0000E+00	13	.0000E+00	14	.0000E+00	15	.0000E+00	16	.0000E+00
17	.0000E+00	18	.0000E+00	19	.0000E+00	20	.0000E+00	21	.0000E+00	22	.0000E+00	23	.0000E+00	24	.0000E+00

DAY OF WEEK = SUNDAY

1	.0000E+00	2	.0000E+00	3	.0000E+00	4	.0000E+00	5	.0000E+00	6	.0000E+00	7	.0000E+00	8	.0000E+00
9	.0000E+00	10	.0000E+00	11	.0000E+00	12	.0000E+00	13	.0000E+00	14	.0000E+00	15	.0000E+00	16	.0000E+00
17	.0000E+00	18	.0000E+00	19	.0000E+00	20	.0000E+00	21	.0000E+00	22	.0000E+00	23	.0000E+00	24	.0000E+00

```
 *** AERMOD - VERSION 22112  ***   *** C:\Lakes\Project Files\Garvey\Garvey.isc
***        03/04/24
 *** AERMET - VERSION  16216 ***   ***
***        13:00:54

PAGE 267
 *** MODELOPTs:    RegDFAULT  CONC  ELEV  URBAN  ADJ_U*

                   * SOURCE EMISSION RATE SCALARS WHICH VARY DIURNALLY AND BY DAY
OF WEEK (HRDOW) *

 SOURCE ID = L0002043     ; SOURCE TYPE = VOLUME   :
  HOUR   SCALAR   HOUR   SCALAR   HOUR   SCALAR   HOUR   SCALAR   HOUR   SCALAR
HOUR   SCALAR   HOUR   SCALAR   HOUR   SCALAR
 - - - - - - - - - - - - - - - - - - - - - - - - - - - - - - - - - - - - - - - -
- - - - - - - - - - - - - - - - - - - - - - - - -
                                                DAY OF WEEK = WEEKDAY
    1  .0000E+00    2  .0000E+00    3  .0000E+00    4  .0000E+00    5  .0000E+00
6  .0000E+00    7  .1000E+01    8  .1000E+01
    9  .1000E+01   10  .1000E+01   11  .1000E+01   12  .1000E+01   13  .1000E+01
14  .1000E+01   15  .1000E+01   16  .1000E+01
   17  .0000E+00   18  .0000E+00   19  .0000E+00   20  .0000E+00   21  .0000E+00
22  .0000E+00   23  .0000E+00   24  .0000E+00
                                                DAY OF WEEK = SATURDAY
    1  .0000E+00    2  .0000E+00    3  .0000E+00    4  .0000E+00    5  .0000E+00
6  .0000E+00    7  .0000E+00    8  .0000E+00
    9  .0000E+00   10  .0000E+00   11  .0000E+00   12  .0000E+00   13  .0000E+00
14  .0000E+00   15  .0000E+00   16  .0000E+00
   17  .0000E+00   18  .0000E+00   19  .0000E+00   20  .0000E+00   21  .0000E+00
22  .0000E+00   23  .0000E+00   24  .0000E+00
                                                DAY OF WEEK = SUNDAY
    1  .0000E+00    2  .0000E+00    3  .0000E+00    4  .0000E+00    5  .0000E+00
6  .0000E+00    7  .0000E+00    8  .0000E+00
    9  .0000E+00   10  .0000E+00   11  .0000E+00   12  .0000E+00   13  .0000E+00
14  .0000E+00   15  .0000E+00   16  .0000E+00
   17  .0000E+00   18  .0000E+00   19  .0000E+00   20  .0000E+00   21  .0000E+00
22  .0000E+00   23  .0000E+00   24  .0000E+00
```

```
 *** AERMOD - VERSION 22112  ***   *** C:\Lakes\Project Files\Garvey\Garvey.isc
***        03/04/24
 *** AERMET - VERSION  16216 ***   ***
***        13:00:54

PAGE 268
 *** MODELOPTs:    RegDFAULT  CONC  ELEV  URBAN  ADJ_U*

                   * SOURCE EMISSION RATE SCALARS WHICH VARY DIURNALLY AND BY DAY
OF WEEK (HRDOW) *

 SOURCE ID = L0002044     ; SOURCE TYPE = VOLUME   :
  HOUR   SCALAR   HOUR   SCALAR   HOUR   SCALAR   HOUR   SCALAR   HOUR   SCALAR
HOUR   SCALAR   HOUR   SCALAR   HOUR   SCALAR
 - - - - - - - - - - - - - - - - - - - - - - - - - - - - - - - - - - - - - - - -
- - - - - - - - - - - - - - - - - - - - - - - - -
                                                DAY OF WEEK = WEEKDAY
    1  .0000E+00    2  .0000E+00    3  .0000E+00    4  .0000E+00    5  .0000E+00
6  .0000E+00    7  .1000E+01    8  .1000E+01
    9  .1000E+01   10  .1000E+01   11  .1000E+01   12  .1000E+01   13  .1000E+01
14  .1000E+01   15  .1000E+01   16  .1000E+01
   17  .0000E+00   18  .0000E+00   19  .0000E+00   20  .0000E+00   21  .0000E+00
22  .0000E+00   23  .0000E+00   24  .0000E+00
                                                DAY OF WEEK = SATURDAY
    1  .0000E+00    2  .0000E+00    3  .0000E+00    4  .0000E+00    5  .0000E+00
6  .0000E+00    7  .0000E+00    8  .0000E+00
    9  .0000E+00   10  .0000E+00   11  .0000E+00   12  .0000E+00   13  .0000E+00
14  .0000E+00   15  .0000E+00   16  .0000E+00
   17  .0000E+00   18  .0000E+00   19  .0000E+00   20  .0000E+00   21  .0000E+00
22  .0000E+00   23  .0000E+00   24  .0000E+00
                                                DAY OF WEEK = SUNDAY
    1  .0000E+00    2  .0000E+00    3  .0000E+00    4  .0000E+00    5  .0000E+00
6  .0000E+00    7  .0000E+00    8  .0000E+00
    9  .0000E+00   10  .0000E+00   11  .0000E+00   12  .0000E+00   13  .0000E+00
14  .0000E+00   15  .0000E+00   16  .0000E+00
   17  .0000E+00   18  .0000E+00   19  .0000E+00   20  .0000E+00   21  .0000E+00
22  .0000E+00   23  .0000E+00   24  .0000E+00
```

```
 *** AERMOD - VERSION 22112  ***   *** C:\Lakes\Project Files\Garvey\Garvey.isc
***        03/04/24
 *** AERMET - VERSION  16216 ***   ***
***        13:00:54

PAGE 269
 *** MODELOPTs:    RegDFAULT  CONC  ELEV  URBAN  ADJ_U*

                   * SOURCE EMISSION RATE SCALARS WHICH VARY DIURNALLY AND BY DAY
OF WEEK (HRDOW) *

 SOURCE ID = L0002045     ; SOURCE TYPE = VOLUME   :
  HOUR   SCALAR   HOUR   SCALAR   HOUR   SCALAR   HOUR   SCALAR   HOUR   SCALAR
HOUR   SCALAR   HOUR   SCALAR   HOUR   SCALAR
 - - - - - - - - - - - - - - - - - - - - - - - - - - - - - - - - - - - - - - - -
- - - - - - - - - - - - - - - - - - - - - - - - - -
                                                DAY OF WEEK = WEEKDAY
    1  .0000E+00    2  .0000E+00    3  .0000E+00    4  .0000E+00    5  .0000E+00
6  .0000E+00    7  .1000E+01    8  .1000E+01
    9  .1000E+01   10  .1000E+01   11  .1000E+01   12  .1000E+01   13  .1000E+01
14  .1000E+01   15  .1000E+01   16  .1000E+01
   17  .0000E+00   18  .0000E+00   19  .0000E+00   20  .0000E+00   21  .0000E+00
22  .0000E+00   23  .0000E+00   24  .0000E+00
                                                DAY OF WEEK = SATURDAY
    1  .0000E+00    2  .0000E+00    3  .0000E+00    4  .0000E+00    5  .0000E+00
6  .0000E+00    7  .0000E+00    8  .0000E+00
    9  .0000E+00   10  .0000E+00   11  .0000E+00   12  .0000E+00   13  .0000E+00
14  .0000E+00   15  .0000E+00   16  .0000E+00
   17  .0000E+00   18  .0000E+00   19  .0000E+00   20  .0000E+00   21  .0000E+00
22  .0000E+00   23  .0000E+00   24  .0000E+00
                                                DAY OF WEEK = SUNDAY
    1  .0000E+00    2  .0000E+00    3  .0000E+00    4  .0000E+00    5  .0000E+00
6  .0000E+00    7  .0000E+00    8  .0000E+00
    9  .0000E+00   10  .0000E+00   11  .0000E+00   12  .0000E+00   13  .0000E+00
14  .0000E+00   15  .0000E+00   16  .0000E+00
   17  .0000E+00   18  .0000E+00   19  .0000E+00   20  .0000E+00   21  .0000E+00
22  .0000E+00   23  .0000E+00   24  .0000E+00
```

```
 *** AERMOD - VERSION 22112  ***   *** C:\Lakes\Project Files\Garvey\Garvey.isc
***        03/04/24
 *** AERMET - VERSION  16216 ***   ***
***        13:00:54

PAGE 270
 *** MODELOPTs:    RegDFAULT  CONC  ELEV  URBAN  ADJ_U*

                   * SOURCE EMISSION RATE SCALARS WHICH VARY DIURNALLY AND BY DAY
OF WEEK (HRDOW) *

 SOURCE ID = L0002046     ; SOURCE TYPE = VOLUME   :
  HOUR   SCALAR   HOUR   SCALAR   HOUR   SCALAR   HOUR   SCALAR   HOUR   SCALAR
HOUR   SCALAR   HOUR   SCALAR   HOUR   SCALAR
 - - - - - - - - - - - - - - - - - - - - - - - - - - - - - - - - - - - - - - - -
- - - - - - - - - - - - - - - - - - - - - - - - - -
                                                DAY OF WEEK = WEEKDAY
    1  .0000E+00    2  .0000E+00    3  .0000E+00    4  .0000E+00    5  .0000E+00
6  .0000E+00    7  .1000E+01    8  .1000E+01
    9  .1000E+01   10  .1000E+01   11  .1000E+01   12  .1000E+01   13  .1000E+01
14  .1000E+01   15  .1000E+01   16  .1000E+01
   17  .0000E+00   18  .0000E+00   19  .0000E+00   20  .0000E+00   21  .0000E+00
22  .0000E+00   23  .0000E+00   24  .0000E+00
                                                DAY OF WEEK = SATURDAY
    1  .0000E+00    2  .0000E+00    3  .0000E+00    4  .0000E+00    5  .0000E+00
6  .0000E+00    7  .0000E+00    8  .0000E+00
    9  .0000E+00   10  .0000E+00   11  .0000E+00   12  .0000E+00   13  .0000E+00
14  .0000E+00   15  .0000E+00   16  .0000E+00
   17  .0000E+00   18  .0000E+00   19  .0000E+00   20  .0000E+00   21  .0000E+00
22  .0000E+00   23  .0000E+00   24  .0000E+00
                                                DAY OF WEEK = SUNDAY
    1  .0000E+00    2  .0000E+00    3  .0000E+00    4  .0000E+00    5  .0000E+00
6  .0000E+00    7  .0000E+00    8  .0000E+00
    9  .0000E+00   10  .0000E+00   11  .0000E+00   12  .0000E+00   13  .0000E+00
14  .0000E+00   15  .0000E+00   16  .0000E+00
   17  .0000E+00   18  .0000E+00   19  .0000E+00   20  .0000E+00   21  .0000E+00
22  .0000E+00   23  .0000E+00   24  .0000E+00
```

*** MODELOPTs: RegDFAULT CONC ELEV URBAN ADJ_U*

* SOURCE EMISSION RATE SCALARS WHICH VARY DIURNALLY AND BY DAY OF WEEK (HRDOW) *

SOURCE ID = L0002047 ; SOURCE TYPE = VOLUME :

HOUR	SCALAR	HOUR	SCALAR	HOUR	SCALAR	HOUR	SCALAR	HOUR	SCALAR	HOUR	SCALAR	HOUR	SCALAR	HOUR	SCALAR

DAY OF WEEK = WEEKDAY

1	.0000E+00	2	.0000E+00	3	.0000E+00	4	.0000E+00	5	.0000E+00	6	.0000E+00	7	.1000E+01	8	.1000E+01
9	.1000E+01	10	.1000E+01	11	.1000E+01	12	.1000E+01	13	.1000E+01	14	.1000E+01	15	.1000E+01	16	.1000E+01
17	.0000E+00	18	.0000E+00	19	.0000E+00	20	.0000E+00	21	.0000E+00	22	.0000E+00	23	.0000E+00	24	.0000E+00

DAY OF WEEK = SATURDAY

1	.0000E+00	2	.0000E+00	3	.0000E+00	4	.0000E+00	5	.0000E+00	6	.0000E+00	7	.0000E+00	8	.0000E+00
9	.0000E+00	10	.0000E+00	11	.0000E+00	12	.0000E+00	13	.0000E+00	14	.0000E+00	15	.0000E+00	16	.0000E+00
17	.0000E+00	18	.0000E+00	19	.0000E+00	20	.0000E+00	21	.0000E+00	22	.0000E+00	23	.0000E+00	24	.0000E+00

DAY OF WEEK = SUNDAY

1	.0000E+00	2	.0000E+00	3	.0000E+00	4	.0000E+00	5	.0000E+00	6	.0000E+00	7	.0000E+00	8	.0000E+00
9	.0000E+00	10	.0000E+00	11	.0000E+00	12	.0000E+00	13	.0000E+00	14	.0000E+00	15	.0000E+00	16	.0000E+00
17	.0000E+00	18	.0000E+00	19	.0000E+00	20	.0000E+00	21	.0000E+00	22	.0000E+00	23	.0000E+00	24	.0000E+00

```
 *** AERMOD - VERSION 22112  ***   *** C:\Lakes\Project Files\Garvey\Garvey.isc
***        03/04/24
 *** AERMET - VERSION  16216 ***   ***
***        13:00:54

PAGE 272
 *** MODELOPTs:    RegDFAULT  CONC  ELEV  URBAN  ADJ_U*

                   * SOURCE EMISSION RATE SCALARS WHICH VARY DIURNALLY AND BY DAY
OF WEEK (HRDOW) *

 SOURCE ID = L0002048     ; SOURCE TYPE = VOLUME   :
  HOUR   SCALAR   HOUR   SCALAR   HOUR   SCALAR   HOUR   SCALAR   HOUR   SCALAR
HOUR   SCALAR   HOUR   SCALAR   HOUR   SCALAR
 - - - - - - - - - - - - - - - - - - - - - - - - - - - - - - - - - - - - - - - -
- - - - - - - - - - - - - - - - - - - - - - - - - -
                                                DAY OF WEEK = WEEKDAY
    1  .0000E+00    2  .0000E+00    3  .0000E+00    4  .0000E+00    5  .0000E+00
6  .0000E+00    7  .1000E+01    8  .1000E+01
    9  .1000E+01   10  .1000E+01   11  .1000E+01   12  .1000E+01   13  .1000E+01
14  .1000E+01   15  .1000E+01   16  .1000E+01
   17  .0000E+00   18  .0000E+00   19  .0000E+00   20  .0000E+00   21  .0000E+00
22  .0000E+00   23  .0000E+00   24  .0000E+00
                                                DAY OF WEEK = SATURDAY
    1  .0000E+00    2  .0000E+00    3  .0000E+00    4  .0000E+00    5  .0000E+00
6  .0000E+00    7  .0000E+00    8  .0000E+00
    9  .0000E+00   10  .0000E+00   11  .0000E+00   12  .0000E+00   13  .0000E+00
14  .0000E+00   15  .0000E+00   16  .0000E+00
   17  .0000E+00   18  .0000E+00   19  .0000E+00   20  .0000E+00   21  .0000E+00
22  .0000E+00   23  .0000E+00   24  .0000E+00
                                                DAY OF WEEK = SUNDAY
    1  .0000E+00    2  .0000E+00    3  .0000E+00    4  .0000E+00    5  .0000E+00
6  .0000E+00    7  .0000E+00    8  .0000E+00
    9  .0000E+00   10  .0000E+00   11  .0000E+00   12  .0000E+00   13  .0000E+00
14  .0000E+00   15  .0000E+00   16  .0000E+00
   17  .0000E+00   18  .0000E+00   19  .0000E+00   20  .0000E+00   21  .0000E+00
22  .0000E+00   23  .0000E+00   24  .0000E+00
```

```
 *** AERMOD - VERSION 22112  ***   *** C:\Lakes\Project Files\Garvey\Garvey.isc
***        03/04/24
 *** AERMET - VERSION  16216 ***   ***
***        13:00:54

PAGE 273
 *** MODELOPTs:    RegDFAULT  CONC  ELEV  URBAN  ADJ_U*

                   * SOURCE EMISSION RATE SCALARS WHICH VARY DIURNALLY AND BY DAY
OF WEEK (HRDOW) *

 SOURCE ID = L0002049     ; SOURCE TYPE = VOLUME   :
  HOUR   SCALAR   HOUR   SCALAR   HOUR   SCALAR   HOUR   SCALAR   HOUR   SCALAR
HOUR   SCALAR   HOUR   SCALAR   HOUR   SCALAR
 - - - - - - - - - - - - - - - - - - - - - - - - - - - - - - - - - - - - - - - -
- - - - - - - - - - - - - - - - - - - - - - - - - -
                                                DAY OF WEEK = WEEKDAY
    1  .0000E+00    2  .0000E+00    3  .0000E+00    4  .0000E+00    5  .0000E+00
6  .0000E+00    7  .1000E+01    8  .1000E+01
    9  .1000E+01   10  .1000E+01   11  .1000E+01   12  .1000E+01   13  .1000E+01
14  .1000E+01   15  .1000E+01   16  .1000E+01
   17  .0000E+00   18  .0000E+00   19  .0000E+00   20  .0000E+00   21  .0000E+00
22  .0000E+00   23  .0000E+00   24  .0000E+00
                                                DAY OF WEEK = SATURDAY
    1  .0000E+00    2  .0000E+00    3  .0000E+00    4  .0000E+00    5  .0000E+00
6  .0000E+00    7  .0000E+00    8  .0000E+00
    9  .0000E+00   10  .0000E+00   11  .0000E+00   12  .0000E+00   13  .0000E+00
14  .0000E+00   15  .0000E+00   16  .0000E+00
   17  .0000E+00   18  .0000E+00   19  .0000E+00   20  .0000E+00   21  .0000E+00
22  .0000E+00   23  .0000E+00   24  .0000E+00
                                                DAY OF WEEK = SUNDAY
    1  .0000E+00    2  .0000E+00    3  .0000E+00    4  .0000E+00    5  .0000E+00
6  .0000E+00    7  .0000E+00    8  .0000E+00
    9  .0000E+00   10  .0000E+00   11  .0000E+00   12  .0000E+00   13  .0000E+00
14  .0000E+00   15  .0000E+00   16  .0000E+00
   17  .0000E+00   18  .0000E+00   19  .0000E+00   20  .0000E+00   21  .0000E+00
22  .0000E+00   23  .0000E+00   24  .0000E+00
```

*** MODELOPTs: RegDFAULT CONC ELEV URBAN ADJ_U*

* SOURCE EMISSION RATE SCALARS WHICH VARY DIURNALLY AND BY DAY OF WEEK (HRDOW) *

SOURCE ID = L0002050 ; SOURCE TYPE = VOLUME :

HOUR	SCALAR	HOUR	SCALAR	HOUR	SCALAR	HOUR	SCALAR	HOUR	SCALAR	HOUR	SCALAR	HOUR	SCALAR	HOUR	SCALAR

DAY OF WEEK = WEEKDAY

1	.0000E+00	2	.0000E+00	3	.0000E+00	4	.0000E+00	5	.0000E+00	6	.0000E+00	7	.1000E+01	8	.1000E+01
9	.1000E+01	10	.1000E+01	11	.1000E+01	12	.1000E+01	13	.1000E+01	14	.1000E+01	15	.1000E+01	16	.1000E+01
17	.0000E+00	18	.0000E+00	19	.0000E+00	20	.0000E+00	21	.0000E+00	22	.0000E+00	23	.0000E+00	24	.0000E+00

DAY OF WEEK = SATURDAY

1	.0000E+00	2	.0000E+00	3	.0000E+00	4	.0000E+00	5	.0000E+00	6	.0000E+00	7	.0000E+00	8	.0000E+00
9	.0000E+00	10	.0000E+00	11	.0000E+00	12	.0000E+00	13	.0000E+00	14	.0000E+00	15	.0000E+00	16	.0000E+00
17	.0000E+00	18	.0000E+00	19	.0000E+00	20	.0000E+00	21	.0000E+00	22	.0000E+00	23	.0000E+00	24	.0000E+00

DAY OF WEEK = SUNDAY

1	.0000E+00	2	.0000E+00	3	.0000E+00	4	.0000E+00	5	.0000E+00	6	.0000E+00	7	.0000E+00	8	.0000E+00
9	.0000E+00	10	.0000E+00	11	.0000E+00	12	.0000E+00	13	.0000E+00	14	.0000E+00	15	.0000E+00	16	.0000E+00
17	.0000E+00	18	.0000E+00	19	.0000E+00	20	.0000E+00	21	.0000E+00	22	.0000E+00	23	.0000E+00	24	.0000E+00

*** MODELOPTs: RegDFAULT CONC ELEV URBAN ADJ_U*

* SOURCE EMISSION RATE SCALARS WHICH VARY DIURNALLY AND BY DAY OF WEEK (HRDOW) *

SOURCE ID = L0002051 ; SOURCE TYPE = VOLUME :

HOUR	SCALAR	HOUR	SCALAR	HOUR	SCALAR	HOUR	SCALAR	HOUR	SCALAR	HOUR	SCALAR	HOUR	SCALAR	HOUR	SCALAR

DAY OF WEEK = WEEKDAY

1	.0000E+00	2	.0000E+00	3	.0000E+00	4	.0000E+00	5	.0000E+00	6	.0000E+00	7	.1000E+01	8	.1000E+01
9	.1000E+01	10	.1000E+01	11	.1000E+01	12	.1000E+01	13	.1000E+01	14	.1000E+01	15	.1000E+01	16	.1000E+01
17	.0000E+00	18	.0000E+00	19	.0000E+00	20	.0000E+00	21	.0000E+00	22	.0000E+00	23	.0000E+00	24	.0000E+00

DAY OF WEEK = SATURDAY

1	.0000E+00	2	.0000E+00	3	.0000E+00	4	.0000E+00	5	.0000E+00	6	.0000E+00	7	.0000E+00	8	.0000E+00
9	.0000E+00	10	.0000E+00	11	.0000E+00	12	.0000E+00	13	.0000E+00	14	.0000E+00	15	.0000E+00	16	.0000E+00
17	.0000E+00	18	.0000E+00	19	.0000E+00	20	.0000E+00	21	.0000E+00	22	.0000E+00	23	.0000E+00	24	.0000E+00

DAY OF WEEK = SUNDAY

1	.0000E+00	2	.0000E+00	3	.0000E+00	4	.0000E+00	5	.0000E+00	6	.0000E+00	7	.0000E+00	8	.0000E+00
9	.0000E+00	10	.0000E+00	11	.0000E+00	12	.0000E+00	13	.0000E+00	14	.0000E+00	15	.0000E+00	16	.0000E+00
17	.0000E+00	18	.0000E+00	19	.0000E+00	20	.0000E+00	21	.0000E+00	22	.0000E+00	23	.0000E+00	24	.0000E+00

*** MODELOPTs: RegDFAULT CONC ELEV URBAN ADJ_U*

* SOURCE EMISSION RATE SCALARS WHICH VARY DIURNALLY AND BY DAY OF WEEK (HRDOW) *

SOURCE ID = L0002052 ; SOURCE TYPE = VOLUME :

HOUR	SCALAR	HOUR	SCALAR	HOUR	SCALAR	HOUR	SCALAR	HOUR	SCALAR	HOUR	SCALAR	HOUR	SCALAR	HOUR	SCALAR

DAY OF WEEK = WEEKDAY

1	.0000E+00	2	.0000E+00	3	.0000E+00	4	.0000E+00	5	.0000E+00	6	.0000E+00	7	.1000E+01	8	.1000E+01
9	.1000E+01	10	.1000E+01	11	.1000E+01	12	.1000E+01	13	.1000E+01	14	.1000E+01	15	.1000E+01	16	.1000E+01
17	.0000E+00	18	.0000E+00	19	.0000E+00	20	.0000E+00	21	.0000E+00	22	.0000E+00	23	.0000E+00	24	.0000E+00

DAY OF WEEK = SATURDAY

1	.0000E+00	2	.0000E+00	3	.0000E+00	4	.0000E+00	5	.0000E+00	6	.0000E+00	7	.0000E+00	8	.0000E+00
9	.0000E+00	10	.0000E+00	11	.0000E+00	12	.0000E+00	13	.0000E+00	14	.0000E+00	15	.0000E+00	16	.0000E+00
17	.0000E+00	18	.0000E+00	19	.0000E+00	20	.0000E+00	21	.0000E+00	22	.0000E+00	23	.0000E+00	24	.0000E+00

DAY OF WEEK = SUNDAY

1	.0000E+00	2	.0000E+00	3	.0000E+00	4	.0000E+00	5	.0000E+00	6	.0000E+00	7	.0000E+00	8	.0000E+00
9	.0000E+00	10	.0000E+00	11	.0000E+00	12	.0000E+00	13	.0000E+00	14	.0000E+00	15	.0000E+00	16	.0000E+00
17	.0000E+00	18	.0000E+00	19	.0000E+00	20	.0000E+00	21	.0000E+00	22	.0000E+00	23	.0000E+00	24	.0000E+00

```
 *** AERMOD - VERSION 22112  ***   *** C:\Lakes\Project Files\Garvey\Garvey.isc
***        03/04/24
 *** AERMET - VERSION  16216 ***   ***
***        13:00:54

PAGE 277
 *** MODELOPTs:    RegDFAULT  CONC  ELEV  URBAN  ADJ_U*

                   * SOURCE EMISSION RATE SCALARS WHICH VARY DIURNALLY AND BY DAY
OF WEEK (HRDOW) *

 SOURCE ID = L0002053     ; SOURCE TYPE = VOLUME   :
  HOUR   SCALAR   HOUR   SCALAR   HOUR   SCALAR   HOUR   SCALAR   HOUR   SCALAR
HOUR   SCALAR   HOUR   SCALAR   HOUR   SCALAR
 - - - - - - - - - - - - - - - - - - - - - - - - - - - - - - - - - - - - - - - -
- - - - - - - - - - - - - - - - - - - - - - - - -
                                                DAY OF WEEK = WEEKDAY
    1  .0000E+00    2  .0000E+00    3  .0000E+00    4  .0000E+00    5  .0000E+00
6  .0000E+00    7  .1000E+01    8  .1000E+01
    9  .1000E+01   10  .1000E+01   11  .1000E+01   12  .1000E+01   13  .1000E+01
14  .1000E+01   15  .1000E+01   16  .1000E+01
   17  .0000E+00   18  .0000E+00   19  .0000E+00   20  .0000E+00   21  .0000E+00
22  .0000E+00   23  .0000E+00   24  .0000E+00
                                                DAY OF WEEK = SATURDAY
    1  .0000E+00    2  .0000E+00    3  .0000E+00    4  .0000E+00    5  .0000E+00
6  .0000E+00    7  .0000E+00    8  .0000E+00
    9  .0000E+00   10  .0000E+00   11  .0000E+00   12  .0000E+00   13  .0000E+00
14  .0000E+00   15  .0000E+00   16  .0000E+00
   17  .0000E+00   18  .0000E+00   19  .0000E+00   20  .0000E+00   21  .0000E+00
22  .0000E+00   23  .0000E+00   24  .0000E+00
                                                DAY OF WEEK = SUNDAY
    1  .0000E+00    2  .0000E+00    3  .0000E+00    4  .0000E+00    5  .0000E+00
6  .0000E+00    7  .0000E+00    8  .0000E+00
    9  .0000E+00   10  .0000E+00   11  .0000E+00   12  .0000E+00   13  .0000E+00
14  .0000E+00   15  .0000E+00   16  .0000E+00
   17  .0000E+00   18  .0000E+00   19  .0000E+00   20  .0000E+00   21  .0000E+00
22  .0000E+00   23  .0000E+00   24  .0000E+00
```

*** MODELOPTs: RegDFAULT CONC ELEV URBAN ADJ_U*

* SOURCE EMISSION RATE SCALARS WHICH VARY DIURNALLY AND BY DAY OF WEEK (HRDOW) *

SOURCE ID = L0002054 ; SOURCE TYPE = VOLUME :

HOUR	SCALAR	HOUR	SCALAR	HOUR	SCALAR	HOUR	SCALAR	HOUR	SCALAR	HOUR	SCALAR	HOUR	SCALAR	HOUR	SCALAR

DAY OF WEEK = WEEKDAY

1	.0000E+00	2	.0000E+00	3	.0000E+00	4	.0000E+00	5	.0000E+00	6	.0000E+00	7	.1000E+01	8	.1000E+01
9	.1000E+01	10	.1000E+01	11	.1000E+01	12	.1000E+01	13	.1000E+01	14	.1000E+01	15	.1000E+01	16	.1000E+01
17	.0000E+00	18	.0000E+00	19	.0000E+00	20	.0000E+00	21	.0000E+00	22	.0000E+00	23	.0000E+00	24	.0000E+00

DAY OF WEEK = SATURDAY

1	.0000E+00	2	.0000E+00	3	.0000E+00	4	.0000E+00	5	.0000E+00	6	.0000E+00	7	.0000E+00	8	.0000E+00
9	.0000E+00	10	.0000E+00	11	.0000E+00	12	.0000E+00	13	.0000E+00	14	.0000E+00	15	.0000E+00	16	.0000E+00
17	.0000E+00	18	.0000E+00	19	.0000E+00	20	.0000E+00	21	.0000E+00	22	.0000E+00	23	.0000E+00	24	.0000E+00

DAY OF WEEK = SUNDAY

1	.0000E+00	2	.0000E+00	3	.0000E+00	4	.0000E+00	5	.0000E+00	6	.0000E+00	7	.0000E+00	8	.0000E+00
9	.0000E+00	10	.0000E+00	11	.0000E+00	12	.0000E+00	13	.0000E+00	14	.0000E+00	15	.0000E+00	16	.0000E+00
17	.0000E+00	18	.0000E+00	19	.0000E+00	20	.0000E+00	21	.0000E+00	22	.0000E+00	23	.0000E+00	24	.0000E+00

*** MODELOPTs: RegDFAULT CONC ELEV URBAN ADJ_U*

* SOURCE EMISSION RATE SCALARS WHICH VARY DIURNALLY AND BY DAY OF WEEK (HRDOW) *

SOURCE ID = L0002055 ; SOURCE TYPE = VOLUME :

HOUR	SCALAR	HOUR	SCALAR	HOUR	SCALAR	HOUR	SCALAR	HOUR	SCALAR	HOUR	SCALAR	HOUR	SCALAR	HOUR	SCALAR

DAY OF WEEK = WEEKDAY

1	.0000E+00	2	.0000E+00	3	.0000E+00	4	.0000E+00	5	.0000E+00	6	.0000E+00	7	.1000E+01	8	.1000E+01
9	.1000E+01	10	.1000E+01	11	.1000E+01	12	.1000E+01	13	.1000E+01	14	.1000E+01	15	.1000E+01	16	.1000E+01
17	.0000E+00	18	.0000E+00	19	.0000E+00	20	.0000E+00	21	.0000E+00	22	.0000E+00	23	.0000E+00	24	.0000E+00

DAY OF WEEK = SATURDAY

1	.0000E+00	2	.0000E+00	3	.0000E+00	4	.0000E+00	5	.0000E+00	6	.0000E+00	7	.0000E+00	8	.0000E+00
9	.0000E+00	10	.0000E+00	11	.0000E+00	12	.0000E+00	13	.0000E+00	14	.0000E+00	15	.0000E+00	16	.0000E+00
17	.0000E+00	18	.0000E+00	19	.0000E+00	20	.0000E+00	21	.0000E+00	22	.0000E+00	23	.0000E+00	24	.0000E+00

DAY OF WEEK = SUNDAY

1	.0000E+00	2	.0000E+00	3	.0000E+00	4	.0000E+00	5	.0000E+00	6	.0000E+00	7	.0000E+00	8	.0000E+00
9	.0000E+00	10	.0000E+00	11	.0000E+00	12	.0000E+00	13	.0000E+00	14	.0000E+00	15	.0000E+00	16	.0000E+00
17	.0000E+00	18	.0000E+00	19	.0000E+00	20	.0000E+00	21	.0000E+00	22	.0000E+00	23	.0000E+00	24	.0000E+00

```
 *** AERMOD - VERSION 22112  ***   *** C:\Lakes\Project Files\Garvey\Garvey.isc
***        03/04/24
 *** AERMET - VERSION  16216 ***   ***
***        13:00:54

PAGE 280
 *** MODELOPTs:    RegDFAULT  CONC  ELEV  URBAN  ADJ_U*

                   * SOURCE EMISSION RATE SCALARS WHICH VARY DIURNALLY AND BY DAY
OF WEEK (HRDOW) *

 SOURCE ID = L0002056     ; SOURCE TYPE = VOLUME   :
  HOUR   SCALAR   HOUR   SCALAR   HOUR   SCALAR   HOUR   SCALAR   HOUR   SCALAR
HOUR   SCALAR   HOUR   SCALAR   HOUR   SCALAR
 - - - - - - - - - - - - - - - - - - - - - - - - - - - - - - - - - - - - - - - -
- - - - - - - - - - - - - - - - - - - - - - - - -
                                                DAY OF WEEK = WEEKDAY
    1  .0000E+00    2  .0000E+00    3  .0000E+00    4  .0000E+00    5  .0000E+00
6  .0000E+00    7  .1000E+01    8  .1000E+01
    9  .1000E+01   10  .1000E+01   11  .1000E+01   12  .1000E+01   13  .1000E+01
14  .1000E+01   15  .1000E+01   16  .1000E+01
   17  .0000E+00   18  .0000E+00   19  .0000E+00   20  .0000E+00   21  .0000E+00
22  .0000E+00   23  .0000E+00   24  .0000E+00
                                                DAY OF WEEK = SATURDAY
    1  .0000E+00    2  .0000E+00    3  .0000E+00    4  .0000E+00    5  .0000E+00
6  .0000E+00    7  .0000E+00    8  .0000E+00
    9  .0000E+00   10  .0000E+00   11  .0000E+00   12  .0000E+00   13  .0000E+00
14  .0000E+00   15  .0000E+00   16  .0000E+00
   17  .0000E+00   18  .0000E+00   19  .0000E+00   20  .0000E+00   21  .0000E+00
22  .0000E+00   23  .0000E+00   24  .0000E+00
                                                DAY OF WEEK = SUNDAY
    1  .0000E+00    2  .0000E+00    3  .0000E+00    4  .0000E+00    5  .0000E+00
6  .0000E+00    7  .0000E+00    8  .0000E+00
    9  .0000E+00   10  .0000E+00   11  .0000E+00   12  .0000E+00   13  .0000E+00
14  .0000E+00   15  .0000E+00   16  .0000E+00
   17  .0000E+00   18  .0000E+00   19  .0000E+00   20  .0000E+00   21  .0000E+00
22  .0000E+00   23  .0000E+00   24  .0000E+00
```

```
 *** AERMOD - VERSION 22112  ***   *** C:\Lakes\Project Files\Garvey\Garvey.isc
***        03/04/24
 *** AERMET - VERSION  16216 ***   ***
***        13:00:54

PAGE 281
 *** MODELOPTs:    RegDFAULT  CONC  ELEV  URBAN  ADJ_U*

                   * SOURCE EMISSION RATE SCALARS WHICH VARY DIURNALLY AND BY DAY
OF WEEK (HRDOW) *

 SOURCE ID = L0002057     ; SOURCE TYPE = VOLUME   :
  HOUR   SCALAR   HOUR   SCALAR   HOUR   SCALAR   HOUR   SCALAR   HOUR   SCALAR
HOUR   SCALAR   HOUR   SCALAR   HOUR   SCALAR
 - - - - - - - - - - - - - - - - - - - - - - - - - - - - - - - - - - - - - - - -
- - - - - - - - - - - - - - - - - - - - - - - - -
                                                DAY OF WEEK = WEEKDAY
    1  .0000E+00    2  .0000E+00    3  .0000E+00    4  .0000E+00    5  .0000E+00
6  .0000E+00    7  .1000E+01    8  .1000E+01
    9  .1000E+01   10  .1000E+01   11  .1000E+01   12  .1000E+01   13  .1000E+01
14  .1000E+01   15  .1000E+01   16  .1000E+01
   17  .0000E+00   18  .0000E+00   19  .0000E+00   20  .0000E+00   21  .0000E+00
22  .0000E+00   23  .0000E+00   24  .0000E+00
                                                DAY OF WEEK = SATURDAY
    1  .0000E+00    2  .0000E+00    3  .0000E+00    4  .0000E+00    5  .0000E+00
6  .0000E+00    7  .0000E+00    8  .0000E+00
    9  .0000E+00   10  .0000E+00   11  .0000E+00   12  .0000E+00   13  .0000E+00
14  .0000E+00   15  .0000E+00   16  .0000E+00
   17  .0000E+00   18  .0000E+00   19  .0000E+00   20  .0000E+00   21  .0000E+00
22  .0000E+00   23  .0000E+00   24  .0000E+00
                                                DAY OF WEEK = SUNDAY
    1  .0000E+00    2  .0000E+00    3  .0000E+00    4  .0000E+00    5  .0000E+00
6  .0000E+00    7  .0000E+00    8  .0000E+00
    9  .0000E+00   10  .0000E+00   11  .0000E+00   12  .0000E+00   13  .0000E+00
14  .0000E+00   15  .0000E+00   16  .0000E+00
   17  .0000E+00   18  .0000E+00   19  .0000E+00   20  .0000E+00   21  .0000E+00
22  .0000E+00   23  .0000E+00   24  .0000E+00
```

```
 *** AERMOD - VERSION 22112  ***   *** C:\Lakes\Project Files\Garvey\Garvey.isc
***        03/04/24
 *** AERMET - VERSION  16216 ***   ***
***        13:00:54

PAGE 282
 *** MODELOPTs:    RegDFAULT  CONC  ELEV  URBAN  ADJ_U*

                   * SOURCE EMISSION RATE SCALARS WHICH VARY DIURNALLY AND BY DAY
OF WEEK (HRDOW) *

 SOURCE ID = L0002058     ; SOURCE TYPE = VOLUME   :
  HOUR   SCALAR   HOUR   SCALAR   HOUR   SCALAR   HOUR   SCALAR   HOUR   SCALAR
HOUR   SCALAR   HOUR   SCALAR   HOUR   SCALAR
 - - - - - - - - - - - - - - - - - - - - - - - - - - - - - - - - - - - - - - - -
- - - - - - - - - - - - - - - - - - - - - - - - -
                                                DAY OF WEEK = WEEKDAY
    1  .0000E+00    2  .0000E+00    3  .0000E+00    4  .0000E+00    5  .0000E+00
6  .0000E+00    7  .1000E+01    8  .1000E+01
    9  .1000E+01   10  .1000E+01   11  .1000E+01   12  .1000E+01   13  .1000E+01
14  .1000E+01   15  .1000E+01   16  .1000E+01
   17  .0000E+00   18  .0000E+00   19  .0000E+00   20  .0000E+00   21  .0000E+00
22  .0000E+00   23  .0000E+00   24  .0000E+00
                                                DAY OF WEEK = SATURDAY
    1  .0000E+00    2  .0000E+00    3  .0000E+00    4  .0000E+00    5  .0000E+00
6  .0000E+00    7  .0000E+00    8  .0000E+00
    9  .0000E+00   10  .0000E+00   11  .0000E+00   12  .0000E+00   13  .0000E+00
14  .0000E+00   15  .0000E+00   16  .0000E+00
   17  .0000E+00   18  .0000E+00   19  .0000E+00   20  .0000E+00   21  .0000E+00
22  .0000E+00   23  .0000E+00   24  .0000E+00
                                                DAY OF WEEK = SUNDAY
    1  .0000E+00    2  .0000E+00    3  .0000E+00    4  .0000E+00    5  .0000E+00
6  .0000E+00    7  .0000E+00    8  .0000E+00
    9  .0000E+00   10  .0000E+00   11  .0000E+00   12  .0000E+00   13  .0000E+00
14  .0000E+00   15  .0000E+00   16  .0000E+00
   17  .0000E+00   18  .0000E+00   19  .0000E+00   20  .0000E+00   21  .0000E+00
22  .0000E+00   23  .0000E+00   24  .0000E+00
```

```
 *** AERMOD - VERSION 22112  ***   *** C:\Lakes\Project Files\Garvey\Garvey.isc
***        03/04/24
 *** AERMET - VERSION  16216 ***   ***
***        13:00:54

PAGE 283
 *** MODELOPTs:    RegDFAULT  CONC  ELEV  URBAN  ADJ_U*

                   * SOURCE EMISSION RATE SCALARS WHICH VARY DIURNALLY AND BY DAY
OF WEEK (HRDOW) *

 SOURCE ID = L0002059     ; SOURCE TYPE = VOLUME   :
  HOUR   SCALAR   HOUR   SCALAR   HOUR   SCALAR   HOUR   SCALAR   HOUR   SCALAR
HOUR   SCALAR   HOUR   SCALAR   HOUR   SCALAR
 - - - - - - - - - - - - - - - - - - - - - - - - - - - - - - - - - - - - - - - -
- - - - - - - - - - - - - - - - - - - - - - - - -
                                                DAY OF WEEK = WEEKDAY
    1  .0000E+00    2  .0000E+00    3  .0000E+00    4  .0000E+00    5  .0000E+00
6  .0000E+00    7  .1000E+01    8  .1000E+01
    9  .1000E+01   10  .1000E+01   11  .1000E+01   12  .1000E+01   13  .1000E+01
14  .1000E+01   15  .1000E+01   16  .1000E+01
   17  .0000E+00   18  .0000E+00   19  .0000E+00   20  .0000E+00   21  .0000E+00
22  .0000E+00   23  .0000E+00   24  .0000E+00
                                                DAY OF WEEK = SATURDAY
    1  .0000E+00    2  .0000E+00    3  .0000E+00    4  .0000E+00    5  .0000E+00
6  .0000E+00    7  .0000E+00    8  .0000E+00
    9  .0000E+00   10  .0000E+00   11  .0000E+00   12  .0000E+00   13  .0000E+00
14  .0000E+00   15  .0000E+00   16  .0000E+00
   17  .0000E+00   18  .0000E+00   19  .0000E+00   20  .0000E+00   21  .0000E+00
22  .0000E+00   23  .0000E+00   24  .0000E+00
                                                DAY OF WEEK = SUNDAY
    1  .0000E+00    2  .0000E+00    3  .0000E+00    4  .0000E+00    5  .0000E+00
6  .0000E+00    7  .0000E+00    8  .0000E+00
    9  .0000E+00   10  .0000E+00   11  .0000E+00   12  .0000E+00   13  .0000E+00
14  .0000E+00   15  .0000E+00   16  .0000E+00
   17  .0000E+00   18  .0000E+00   19  .0000E+00   20  .0000E+00   21  .0000E+00
22  .0000E+00   23  .0000E+00   24  .0000E+00
```

*** MODELOPTs: RegDFAULT CONC ELEV URBAN ADJ_U*

* SOURCE EMISSION RATE SCALARS WHICH VARY DIURNALLY AND BY DAY OF WEEK (HRDOW) *

SOURCE ID = L0002060 ; SOURCE TYPE = VOLUME :

HOUR	SCALAR	HOUR	SCALAR	HOUR	SCALAR	HOUR	SCALAR	HOUR	SCALAR	HOUR	SCALAR	HOUR	SCALAR	HOUR	SCALAR

DAY OF WEEK = WEEKDAY

1	.0000E+00	2	.0000E+00	3	.0000E+00	4	.0000E+00	5	.0000E+00	6	.0000E+00	7	.1000E+01	8	.1000E+01
9	.1000E+01	10	.1000E+01	11	.1000E+01	12	.1000E+01	13	.1000E+01	14	.1000E+01	15	.1000E+01	16	.1000E+01
17	.0000E+00	18	.0000E+00	19	.0000E+00	20	.0000E+00	21	.0000E+00	22	.0000E+00	23	.0000E+00	24	.0000E+00

DAY OF WEEK = SATURDAY

1	.0000E+00	2	.0000E+00	3	.0000E+00	4	.0000E+00	5	.0000E+00	6	.0000E+00	7	.0000E+00	8	.0000E+00
9	.0000E+00	10	.0000E+00	11	.0000E+00	12	.0000E+00	13	.0000E+00	14	.0000E+00	15	.0000E+00	16	.0000E+00
17	.0000E+00	18	.0000E+00	19	.0000E+00	20	.0000E+00	21	.0000E+00	22	.0000E+00	23	.0000E+00	24	.0000E+00

DAY OF WEEK = SUNDAY

1	.0000E+00	2	.0000E+00	3	.0000E+00	4	.0000E+00	5	.0000E+00	6	.0000E+00	7	.0000E+00	8	.0000E+00
9	.0000E+00	10	.0000E+00	11	.0000E+00	12	.0000E+00	13	.0000E+00	14	.0000E+00	15	.0000E+00	16	.0000E+00
17	.0000E+00	18	.0000E+00	19	.0000E+00	20	.0000E+00	21	.0000E+00	22	.0000E+00	23	.0000E+00	24	.0000E+00

```
 *** AERMOD - VERSION 22112  ***   *** C:\Lakes\Project Files\Garvey\Garvey.isc
***        03/04/24
 *** AERMET - VERSION  16216 ***   ***
***        13:00:54

PAGE 285
 *** MODELOPTs:    RegDFAULT  CONC  ELEV  URBAN  ADJ_U*

                   * SOURCE EMISSION RATE SCALARS WHICH VARY DIURNALLY AND BY DAY
OF WEEK (HRDOW) *

 SOURCE ID = L0002061     ; SOURCE TYPE = VOLUME   :
  HOUR   SCALAR   HOUR   SCALAR   HOUR   SCALAR   HOUR   SCALAR   HOUR   SCALAR
HOUR   SCALAR   HOUR   SCALAR   HOUR   SCALAR
 - - - - - - - - - - - - - - - - - - - - - - - - - - - - - - - - - - - - - - - -
- - - - - - - - - - - - - - - - - - - - - - - - -
                                                DAY OF WEEK = WEEKDAY
    1  .0000E+00    2  .0000E+00    3  .0000E+00    4  .0000E+00    5  .0000E+00
6  .0000E+00    7  .1000E+01    8  .1000E+01
    9  .1000E+01   10  .1000E+01   11  .1000E+01   12  .1000E+01   13  .1000E+01
14  .1000E+01   15  .1000E+01   16  .1000E+01
   17  .0000E+00   18  .0000E+00   19  .0000E+00   20  .0000E+00   21  .0000E+00
22  .0000E+00   23  .0000E+00   24  .0000E+00
                                                DAY OF WEEK = SATURDAY
    1  .0000E+00    2  .0000E+00    3  .0000E+00    4  .0000E+00    5  .0000E+00
6  .0000E+00    7  .0000E+00    8  .0000E+00
    9  .0000E+00   10  .0000E+00   11  .0000E+00   12  .0000E+00   13  .0000E+00
14  .0000E+00   15  .0000E+00   16  .0000E+00
   17  .0000E+00   18  .0000E+00   19  .0000E+00   20  .0000E+00   21  .0000E+00
22  .0000E+00   23  .0000E+00   24  .0000E+00
                                                DAY OF WEEK = SUNDAY
    1  .0000E+00    2  .0000E+00    3  .0000E+00    4  .0000E+00    5  .0000E+00
6  .0000E+00    7  .0000E+00    8  .0000E+00
    9  .0000E+00   10  .0000E+00   11  .0000E+00   12  .0000E+00   13  .0000E+00
14  .0000E+00   15  .0000E+00   16  .0000E+00
   17  .0000E+00   18  .0000E+00   19  .0000E+00   20  .0000E+00   21  .0000E+00
22  .0000E+00   23  .0000E+00   24  .0000E+00
```

*** MODELOPTs: RegDFAULT CONC ELEV URBAN ADJ_U*

* SOURCE EMISSION RATE SCALARS WHICH VARY DIURNALLY AND BY DAY OF WEEK (HRDOW) *

SOURCE ID = L0002062 ; SOURCE TYPE = VOLUME :

HOUR	SCALAR	HOUR	SCALAR	HOUR	SCALAR	HOUR	SCALAR	HOUR	SCALAR	HOUR	SCALAR	HOUR	SCALAR	HOUR	SCALAR

DAY OF WEEK = WEEKDAY

1	.0000E+00	2	.0000E+00	3	.0000E+00	4	.0000E+00	5	.0000E+00	6	.0000E+00	7	.1000E+01	8	.1000E+01
9	.1000E+01	10	.1000E+01	11	.1000E+01	12	.1000E+01	13	.1000E+01	14	.1000E+01	15	.1000E+01	16	.1000E+01
17	.0000E+00	18	.0000E+00	19	.0000E+00	20	.0000E+00	21	.0000E+00	22	.0000E+00	23	.0000E+00	24	.0000E+00

DAY OF WEEK = SATURDAY

1	.0000E+00	2	.0000E+00	3	.0000E+00	4	.0000E+00	5	.0000E+00	6	.0000E+00	7	.0000E+00	8	.0000E+00
9	.0000E+00	10	.0000E+00	11	.0000E+00	12	.0000E+00	13	.0000E+00	14	.0000E+00	15	.0000E+00	16	.0000E+00
17	.0000E+00	18	.0000E+00	19	.0000E+00	20	.0000E+00	21	.0000E+00	22	.0000E+00	23	.0000E+00	24	.0000E+00

DAY OF WEEK = SUNDAY

1	.0000E+00	2	.0000E+00	3	.0000E+00	4	.0000E+00	5	.0000E+00	6	.0000E+00	7	.0000E+00	8	.0000E+00
9	.0000E+00	10	.0000E+00	11	.0000E+00	12	.0000E+00	13	.0000E+00	14	.0000E+00	15	.0000E+00	16	.0000E+00
17	.0000E+00	18	.0000E+00	19	.0000E+00	20	.0000E+00	21	.0000E+00	22	.0000E+00	23	.0000E+00	24	.0000E+00

*** MODELOPTs: RegDFAULT CONC ELEV URBAN ADJ_U*

* SOURCE EMISSION RATE SCALARS WHICH VARY DIURNALLY AND BY DAY OF WEEK (HRDOW) *

SOURCE ID = L0002063 ; SOURCE TYPE = VOLUME :

HOUR	SCALAR	HOUR	SCALAR	HOUR	SCALAR	HOUR	SCALAR	HOUR	SCALAR	HOUR	SCALAR	HOUR	SCALAR	HOUR	SCALAR

DAY OF WEEK = WEEKDAY

1	.0000E+00	2	.0000E+00	3	.0000E+00	4	.0000E+00	5	.0000E+00	6	.0000E+00	7	.1000E+01	8	.1000E+01
9	.1000E+01	10	.1000E+01	11	.1000E+01	12	.1000E+01	13	.1000E+01	14	.1000E+01	15	.1000E+01	16	.1000E+01
17	.0000E+00	18	.0000E+00	19	.0000E+00	20	.0000E+00	21	.0000E+00	22	.0000E+00	23	.0000E+00	24	.0000E+00

DAY OF WEEK = SATURDAY

1	.0000E+00	2	.0000E+00	3	.0000E+00	4	.0000E+00	5	.0000E+00	6	.0000E+00	7	.0000E+00	8	.0000E+00
9	.0000E+00	10	.0000E+00	11	.0000E+00	12	.0000E+00	13	.0000E+00	14	.0000E+00	15	.0000E+00	16	.0000E+00
17	.0000E+00	18	.0000E+00	19	.0000E+00	20	.0000E+00	21	.0000E+00	22	.0000E+00	23	.0000E+00	24	.0000E+00

DAY OF WEEK = SUNDAY

1	.0000E+00	2	.0000E+00	3	.0000E+00	4	.0000E+00	5	.0000E+00	6	.0000E+00	7	.0000E+00	8	.0000E+00
9	.0000E+00	10	.0000E+00	11	.0000E+00	12	.0000E+00	13	.0000E+00	14	.0000E+00	15	.0000E+00	16	.0000E+00
17	.0000E+00	18	.0000E+00	19	.0000E+00	20	.0000E+00	21	.0000E+00	22	.0000E+00	23	.0000E+00	24	.0000E+00

```
 *** AERMOD - VERSION 22112  ***   *** C:\Lakes\Project Files\Garvey\Garvey.isc
***        03/04/24
 *** AERMET - VERSION  16216 ***   ***
***        13:00:54

PAGE 288
 *** MODELOPTs:    RegDFAULT  CONC  ELEV  URBAN  ADJ_U*

                   * SOURCE EMISSION RATE SCALARS WHICH VARY DIURNALLY AND BY DAY
OF WEEK (HRDOW) *

 SOURCE ID = L0002064     ; SOURCE TYPE = VOLUME   :
  HOUR   SCALAR   HOUR   SCALAR   HOUR   SCALAR   HOUR   SCALAR   HOUR   SCALAR
HOUR   SCALAR   HOUR   SCALAR   HOUR   SCALAR
 - - - - - - - - - - - - - - - - - - - - - - - - - - - - - - - - - - - - - - - -
- - - - - - - - - - - - - - - - - - - - - - - - - -
                                                DAY OF WEEK = WEEKDAY
    1  .0000E+00    2  .0000E+00    3  .0000E+00    4  .0000E+00    5  .0000E+00
6  .0000E+00    7  .1000E+01    8  .1000E+01
    9  .1000E+01   10  .1000E+01   11  .1000E+01   12  .1000E+01   13  .1000E+01
14  .1000E+01   15  .1000E+01   16  .1000E+01
   17  .0000E+00   18  .0000E+00   19  .0000E+00   20  .0000E+00   21  .0000E+00
22  .0000E+00   23  .0000E+00   24  .0000E+00
                                                DAY OF WEEK = SATURDAY
    1  .0000E+00    2  .0000E+00    3  .0000E+00    4  .0000E+00    5  .0000E+00
6  .0000E+00    7  .0000E+00    8  .0000E+00
    9  .0000E+00   10  .0000E+00   11  .0000E+00   12  .0000E+00   13  .0000E+00
14  .0000E+00   15  .0000E+00   16  .0000E+00
   17  .0000E+00   18  .0000E+00   19  .0000E+00   20  .0000E+00   21  .0000E+00
22  .0000E+00   23  .0000E+00   24  .0000E+00
                                                DAY OF WEEK = SUNDAY
    1  .0000E+00    2  .0000E+00    3  .0000E+00    4  .0000E+00    5  .0000E+00
6  .0000E+00    7  .0000E+00    8  .0000E+00
    9  .0000E+00   10  .0000E+00   11  .0000E+00   12  .0000E+00   13  .0000E+00
14  .0000E+00   15  .0000E+00   16  .0000E+00
   17  .0000E+00   18  .0000E+00   19  .0000E+00   20  .0000E+00   21  .0000E+00
22  .0000E+00   23  .0000E+00   24  .0000E+00
```

*** MODELOPTs: RegDFAULT CONC ELEV URBAN ADJ_U*

* SOURCE EMISSION RATE SCALARS WHICH VARY DIURNALLY AND BY DAY OF WEEK (HRDOW) *

SOURCE ID = L0002065 ; SOURCE TYPE = VOLUME :

HOUR	SCALAR	HOUR	SCALAR	HOUR	SCALAR	HOUR	SCALAR	HOUR	SCALAR	HOUR	SCALAR	HOUR	SCALAR	HOUR	SCALAR

DAY OF WEEK = WEEKDAY

1	.0000E+00	2	.0000E+00	3	.0000E+00	4	.0000E+00	5	.0000E+00	6	.0000E+00	7	.1000E+01	8	.1000E+01
9	.1000E+01	10	.1000E+01	11	.1000E+01	12	.1000E+01	13	.1000E+01	14	.1000E+01	15	.1000E+01	16	.1000E+01
17	.0000E+00	18	.0000E+00	19	.0000E+00	20	.0000E+00	21	.0000E+00	22	.0000E+00	23	.0000E+00	24	.0000E+00

DAY OF WEEK = SATURDAY

1	.0000E+00	2	.0000E+00	3	.0000E+00	4	.0000E+00	5	.0000E+00	6	.0000E+00	7	.0000E+00	8	.0000E+00
9	.0000E+00	10	.0000E+00	11	.0000E+00	12	.0000E+00	13	.0000E+00	14	.0000E+00	15	.0000E+00	16	.0000E+00
17	.0000E+00	18	.0000E+00	19	.0000E+00	20	.0000E+00	21	.0000E+00	22	.0000E+00	23	.0000E+00	24	.0000E+00

DAY OF WEEK = SUNDAY

1	.0000E+00	2	.0000E+00	3	.0000E+00	4	.0000E+00	5	.0000E+00	6	.0000E+00	7	.0000E+00	8	.0000E+00
9	.0000E+00	10	.0000E+00	11	.0000E+00	12	.0000E+00	13	.0000E+00	14	.0000E+00	15	.0000E+00	16	.0000E+00
17	.0000E+00	18	.0000E+00	19	.0000E+00	20	.0000E+00	21	.0000E+00	22	.0000E+00	23	.0000E+00	24	.0000E+00

```
 *** AERMOD - VERSION 22112  ***   *** C:\Lakes\Project Files\Garvey\Garvey.isc
***        03/04/24
 *** AERMET - VERSION  16216 ***   ***
***        13:00:54

PAGE 290
 *** MODELOPTs:    RegDFAULT  CONC  ELEV  URBAN  ADJ_U*

                   * SOURCE EMISSION RATE SCALARS WHICH VARY DIURNALLY AND BY DAY
OF WEEK (HRDOW) *

 SOURCE ID = L0002066     ; SOURCE TYPE = VOLUME   :
  HOUR   SCALAR   HOUR   SCALAR   HOUR   SCALAR   HOUR   SCALAR   HOUR   SCALAR
HOUR   SCALAR   HOUR   SCALAR   HOUR   SCALAR
 - - - - - - - - - - - - - - - - - - - - - - - - - - - - - - - - - - - - - - - -
- - - - - - - - - - - - - - - - - - - - - - - - -
                                                DAY OF WEEK = WEEKDAY
    1  .0000E+00    2  .0000E+00    3  .0000E+00    4  .0000E+00    5  .0000E+00
6  .0000E+00    7  .1000E+01    8  .1000E+01
    9  .1000E+01   10  .1000E+01   11  .1000E+01   12  .1000E+01   13  .1000E+01
14  .1000E+01   15  .1000E+01   16  .1000E+01
   17  .0000E+00   18  .0000E+00   19  .0000E+00   20  .0000E+00   21  .0000E+00
22  .0000E+00   23  .0000E+00   24  .0000E+00
                                                DAY OF WEEK = SATURDAY
    1  .0000E+00    2  .0000E+00    3  .0000E+00    4  .0000E+00    5  .0000E+00
6  .0000E+00    7  .0000E+00    8  .0000E+00
    9  .0000E+00   10  .0000E+00   11  .0000E+00   12  .0000E+00   13  .0000E+00
14  .0000E+00   15  .0000E+00   16  .0000E+00
   17  .0000E+00   18  .0000E+00   19  .0000E+00   20  .0000E+00   21  .0000E+00
22  .0000E+00   23  .0000E+00   24  .0000E+00
                                                DAY OF WEEK = SUNDAY
    1  .0000E+00    2  .0000E+00    3  .0000E+00    4  .0000E+00    5  .0000E+00
6  .0000E+00    7  .0000E+00    8  .0000E+00
    9  .0000E+00   10  .0000E+00   11  .0000E+00   12  .0000E+00   13  .0000E+00
14  .0000E+00   15  .0000E+00   16  .0000E+00
   17  .0000E+00   18  .0000E+00   19  .0000E+00   20  .0000E+00   21  .0000E+00
22  .0000E+00   23  .0000E+00   24  .0000E+00
```

```
 *** AERMOD - VERSION 22112  ***   *** C:\Lakes\Project Files\Garvey\Garvey.isc
***        03/04/24
 *** AERMET - VERSION  16216 ***   ***
***        13:00:54

PAGE 291
 *** MODELOPTs:    RegDFAULT  CONC  ELEV  URBAN  ADJ_U*

                   * SOURCE EMISSION RATE SCALARS WHICH VARY DIURNALLY AND BY DAY
OF WEEK (HRDOW) *

 SOURCE ID = L0002067     ; SOURCE TYPE = VOLUME   :
  HOUR   SCALAR   HOUR   SCALAR   HOUR   SCALAR   HOUR   SCALAR   HOUR   SCALAR
HOUR   SCALAR   HOUR   SCALAR   HOUR   SCALAR
 - - - - - - - - - - - - - - - - - - - - - - - - - - - - - - - - - - - - - - - -
- - - - - - - - - - - - - - - - - - - - - - - - -
                                                DAY OF WEEK = WEEKDAY
    1  .0000E+00    2  .0000E+00    3  .0000E+00    4  .0000E+00    5  .0000E+00
6  .0000E+00    7  .1000E+01    8  .1000E+01
    9  .1000E+01   10  .1000E+01   11  .1000E+01   12  .1000E+01   13  .1000E+01
14  .1000E+01   15  .1000E+01   16  .1000E+01
   17  .0000E+00   18  .0000E+00   19  .0000E+00   20  .0000E+00   21  .0000E+00
22  .0000E+00   23  .0000E+00   24  .0000E+00
                                                DAY OF WEEK = SATURDAY
    1  .0000E+00    2  .0000E+00    3  .0000E+00    4  .0000E+00    5  .0000E+00
6  .0000E+00    7  .0000E+00    8  .0000E+00
    9  .0000E+00   10  .0000E+00   11  .0000E+00   12  .0000E+00   13  .0000E+00
14  .0000E+00   15  .0000E+00   16  .0000E+00
   17  .0000E+00   18  .0000E+00   19  .0000E+00   20  .0000E+00   21  .0000E+00
22  .0000E+00   23  .0000E+00   24  .0000E+00
                                                DAY OF WEEK = SUNDAY
    1  .0000E+00    2  .0000E+00    3  .0000E+00    4  .0000E+00    5  .0000E+00
6  .0000E+00    7  .0000E+00    8  .0000E+00
    9  .0000E+00   10  .0000E+00   11  .0000E+00   12  .0000E+00   13  .0000E+00
14  .0000E+00   15  .0000E+00   16  .0000E+00
   17  .0000E+00   18  .0000E+00   19  .0000E+00   20  .0000E+00   21  .0000E+00
22  .0000E+00   23  .0000E+00   24  .0000E+00
```

```
 *** AERMOD - VERSION 22112  ***   *** C:\Lakes\Project Files\Garvey\Garvey.isc
***        03/04/24
 *** AERMET - VERSION  16216 ***   ***
***        13:00:54

PAGE 292
 *** MODELOPTs:    RegDFAULT  CONC  ELEV  URBAN  ADJ_U*

                   * SOURCE EMISSION RATE SCALARS WHICH VARY DIURNALLY AND BY DAY
OF WEEK (HRDOW) *

 SOURCE ID = L0002068     ; SOURCE TYPE = VOLUME   :
  HOUR   SCALAR   HOUR   SCALAR   HOUR   SCALAR   HOUR   SCALAR   HOUR   SCALAR
HOUR   SCALAR   HOUR   SCALAR   HOUR   SCALAR
 - - - - - - - - - - - - - - - - - - - - - - - - - - - - - - - - - - - - - - - -
- - - - - - - - - - - - - - - - - - - - - - - - -
                                                DAY OF WEEK = WEEKDAY
    1  .0000E+00    2  .0000E+00    3  .0000E+00    4  .0000E+00    5  .0000E+00
6  .0000E+00    7  .1000E+01    8  .1000E+01
    9  .1000E+01   10  .1000E+01   11  .1000E+01   12  .1000E+01   13  .1000E+01
14  .1000E+01   15  .1000E+01   16  .1000E+01
   17  .0000E+00   18  .0000E+00   19  .0000E+00   20  .0000E+00   21  .0000E+00
22  .0000E+00   23  .0000E+00   24  .0000E+00
                                                DAY OF WEEK = SATURDAY
    1  .0000E+00    2  .0000E+00    3  .0000E+00    4  .0000E+00    5  .0000E+00
6  .0000E+00    7  .0000E+00    8  .0000E+00
    9  .0000E+00   10  .0000E+00   11  .0000E+00   12  .0000E+00   13  .0000E+00
14  .0000E+00   15  .0000E+00   16  .0000E+00
   17  .0000E+00   18  .0000E+00   19  .0000E+00   20  .0000E+00   21  .0000E+00
22  .0000E+00   23  .0000E+00   24  .0000E+00
                                                DAY OF WEEK = SUNDAY
    1  .0000E+00    2  .0000E+00    3  .0000E+00    4  .0000E+00    5  .0000E+00
6  .0000E+00    7  .0000E+00    8  .0000E+00
    9  .0000E+00   10  .0000E+00   11  .0000E+00   12  .0000E+00   13  .0000E+00
14  .0000E+00   15  .0000E+00   16  .0000E+00
   17  .0000E+00   18  .0000E+00   19  .0000E+00   20  .0000E+00   21  .0000E+00
22  .0000E+00   23  .0000E+00   24  .0000E+00
```

*** MODELOPTs: RegDFAULT CONC ELEV URBAN ADJ_U*

* SOURCE EMISSION RATE SCALARS WHICH VARY DIURNALLY AND BY DAY OF WEEK (HRDOW) *

SOURCE ID = L0002069 ; SOURCE TYPE = VOLUME :

HOUR	SCALAR	HOUR	SCALAR	HOUR	SCALAR	HOUR	SCALAR	HOUR	SCALAR	HOUR	SCALAR	HOUR	SCALAR	HOUR	SCALAR

DAY OF WEEK = WEEKDAY

1	.0000E+00	2	.0000E+00	3	.0000E+00	4	.0000E+00	5	.0000E+00	6	.0000E+00	7	.1000E+01	8	.1000E+01
9	.1000E+01	10	.1000E+01	11	.1000E+01	12	.1000E+01	13	.1000E+01	14	.1000E+01	15	.1000E+01	16	.1000E+01
17	.0000E+00	18	.0000E+00	19	.0000E+00	20	.0000E+00	21	.0000E+00	22	.0000E+00	23	.0000E+00	24	.0000E+00

DAY OF WEEK = SATURDAY

1	.0000E+00	2	.0000E+00	3	.0000E+00	4	.0000E+00	5	.0000E+00	6	.0000E+00	7	.0000E+00	8	.0000E+00
9	.0000E+00	10	.0000E+00	11	.0000E+00	12	.0000E+00	13	.0000E+00	14	.0000E+00	15	.0000E+00	16	.0000E+00
17	.0000E+00	18	.0000E+00	19	.0000E+00	20	.0000E+00	21	.0000E+00	22	.0000E+00	23	.0000E+00	24	.0000E+00

DAY OF WEEK = SUNDAY

1	.0000E+00	2	.0000E+00	3	.0000E+00	4	.0000E+00	5	.0000E+00	6	.0000E+00	7	.0000E+00	8	.0000E+00
9	.0000E+00	10	.0000E+00	11	.0000E+00	12	.0000E+00	13	.0000E+00	14	.0000E+00	15	.0000E+00	16	.0000E+00
17	.0000E+00	18	.0000E+00	19	.0000E+00	20	.0000E+00	21	.0000E+00	22	.0000E+00	23	.0000E+00	24	.0000E+00

```
 *** AERMOD - VERSION 22112  ***   *** C:\Lakes\Project Files\Garvey\Garvey.isc
***        03/04/24
 *** AERMET - VERSION  16216 ***   ***
***        13:00:54

PAGE 294
 *** MODELOPTs:    RegDFAULT  CONC  ELEV  URBAN  ADJ_U*

                   * SOURCE EMISSION RATE SCALARS WHICH VARY DIURNALLY AND BY DAY
OF WEEK (HRDOW) *

 SOURCE ID = L0002070     ; SOURCE TYPE = VOLUME   :
  HOUR   SCALAR   HOUR   SCALAR   HOUR   SCALAR   HOUR   SCALAR   HOUR   SCALAR
HOUR   SCALAR   HOUR   SCALAR   HOUR   SCALAR
 - - - - - - - - - - - - - - - - - - - - - - - - - - - - - - - - - - - - - - - -
- - - - - - - - - - - - - - - - - - - - - - - - -
                                                DAY OF WEEK = WEEKDAY
    1  .0000E+00    2  .0000E+00    3  .0000E+00    4  .0000E+00    5  .0000E+00
6  .0000E+00    7  .1000E+01    8  .1000E+01
    9  .1000E+01   10  .1000E+01   11  .1000E+01   12  .1000E+01   13  .1000E+01
14  .1000E+01   15  .1000E+01   16  .1000E+01
   17  .0000E+00   18  .0000E+00   19  .0000E+00   20  .0000E+00   21  .0000E+00
22  .0000E+00   23  .0000E+00   24  .0000E+00
                                                DAY OF WEEK = SATURDAY
    1  .0000E+00    2  .0000E+00    3  .0000E+00    4  .0000E+00    5  .0000E+00
6  .0000E+00    7  .0000E+00    8  .0000E+00
    9  .0000E+00   10  .0000E+00   11  .0000E+00   12  .0000E+00   13  .0000E+00
14  .0000E+00   15  .0000E+00   16  .0000E+00
   17  .0000E+00   18  .0000E+00   19  .0000E+00   20  .0000E+00   21  .0000E+00
22  .0000E+00   23  .0000E+00   24  .0000E+00
                                                DAY OF WEEK = SUNDAY
    1  .0000E+00    2  .0000E+00    3  .0000E+00    4  .0000E+00    5  .0000E+00
6  .0000E+00    7  .0000E+00    8  .0000E+00
    9  .0000E+00   10  .0000E+00   11  .0000E+00   12  .0000E+00   13  .0000E+00
14  .0000E+00   15  .0000E+00   16  .0000E+00
   17  .0000E+00   18  .0000E+00   19  .0000E+00   20  .0000E+00   21  .0000E+00
22  .0000E+00   23  .0000E+00   24  .0000E+00
```

```
 *** AERMOD - VERSION 22112  ***   *** C:\Lakes\Project Files\Garvey\Garvey.isc
***        03/04/24
 *** AERMET - VERSION  16216 ***   ***
***        13:00:54

PAGE 295
 *** MODELOPTs:    RegDFAULT  CONC  ELEV  URBAN  ADJ_U*

                   * SOURCE EMISSION RATE SCALARS WHICH VARY DIURNALLY AND BY DAY
OF WEEK (HRDOW) *

 SOURCE ID = L0002071     ; SOURCE TYPE = VOLUME   :
  HOUR   SCALAR   HOUR   SCALAR   HOUR   SCALAR   HOUR   SCALAR   HOUR   SCALAR
HOUR   SCALAR   HOUR   SCALAR   HOUR   SCALAR
 - - - - - - - - - - - - - - - - - - - - - - - - - - - - - - - - - - - - - - - -
- - - - - - - - - - - - - - - - - - - - - - - - -
                                                DAY OF WEEK = WEEKDAY
    1  .0000E+00    2  .0000E+00    3  .0000E+00    4  .0000E+00    5  .0000E+00
6  .0000E+00    7  .1000E+01    8  .1000E+01
    9  .1000E+01   10  .1000E+01   11  .1000E+01   12  .1000E+01   13  .1000E+01
14  .1000E+01   15  .1000E+01   16  .1000E+01
   17  .0000E+00   18  .0000E+00   19  .0000E+00   20  .0000E+00   21  .0000E+00
22  .0000E+00   23  .0000E+00   24  .0000E+00
                                                DAY OF WEEK = SATURDAY
    1  .0000E+00    2  .0000E+00    3  .0000E+00    4  .0000E+00    5  .0000E+00
6  .0000E+00    7  .0000E+00    8  .0000E+00
    9  .0000E+00   10  .0000E+00   11  .0000E+00   12  .0000E+00   13  .0000E+00
14  .0000E+00   15  .0000E+00   16  .0000E+00
   17  .0000E+00   18  .0000E+00   19  .0000E+00   20  .0000E+00   21  .0000E+00
22  .0000E+00   23  .0000E+00   24  .0000E+00
                                                DAY OF WEEK = SUNDAY
    1  .0000E+00    2  .0000E+00    3  .0000E+00    4  .0000E+00    5  .0000E+00
6  .0000E+00    7  .0000E+00    8  .0000E+00
    9  .0000E+00   10  .0000E+00   11  .0000E+00   12  .0000E+00   13  .0000E+00
14  .0000E+00   15  .0000E+00   16  .0000E+00
   17  .0000E+00   18  .0000E+00   19  .0000E+00   20  .0000E+00   21  .0000E+00
22  .0000E+00   23  .0000E+00   24  .0000E+00
```

*** MODELOPTs: RegDFAULT CONC ELEV URBAN ADJ_U*

* SOURCE EMISSION RATE SCALARS WHICH VARY DIURNALLY AND BY DAY OF WEEK (HRDOW) *

SOURCE ID = L0002072 ; SOURCE TYPE = VOLUME :

HOUR	SCALAR	HOUR	SCALAR	HOUR	SCALAR	HOUR	SCALAR	HOUR	SCALAR	HOUR	SCALAR	HOUR	SCALAR	HOUR	SCALAR

DAY OF WEEK = WEEKDAY

1	.0000E+00	2	.0000E+00	3	.0000E+00	4	.0000E+00	5	.0000E+00	6	.0000E+00	7	.1000E+01	8	.1000E+01
9	.1000E+01	10	.1000E+01	11	.1000E+01	12	.1000E+01	13	.1000E+01	14	.1000E+01	15	.1000E+01	16	.1000E+01
17	.0000E+00	18	.0000E+00	19	.0000E+00	20	.0000E+00	21	.0000E+00	22	.0000E+00	23	.0000E+00	24	.0000E+00

DAY OF WEEK = SATURDAY

1	.0000E+00	2	.0000E+00	3	.0000E+00	4	.0000E+00	5	.0000E+00	6	.0000E+00	7	.0000E+00	8	.0000E+00
9	.0000E+00	10	.0000E+00	11	.0000E+00	12	.0000E+00	13	.0000E+00	14	.0000E+00	15	.0000E+00	16	.0000E+00
17	.0000E+00	18	.0000E+00	19	.0000E+00	20	.0000E+00	21	.0000E+00	22	.0000E+00	23	.0000E+00	24	.0000E+00

DAY OF WEEK = SUNDAY

1	.0000E+00	2	.0000E+00	3	.0000E+00	4	.0000E+00	5	.0000E+00	6	.0000E+00	7	.0000E+00	8	.0000E+00
9	.0000E+00	10	.0000E+00	11	.0000E+00	12	.0000E+00	13	.0000E+00	14	.0000E+00	15	.0000E+00	16	.0000E+00
17	.0000E+00	18	.0000E+00	19	.0000E+00	20	.0000E+00	21	.0000E+00	22	.0000E+00	23	.0000E+00	24	.0000E+00

*** MODELOPTs: RegDFAULT CONC ELEV URBAN ADJ_U*

* SOURCE EMISSION RATE SCALARS WHICH VARY DIURNALLY AND BY DAY OF WEEK (HRDOW) *

SOURCE ID = L0002073 ; SOURCE TYPE = VOLUME :

HOUR	SCALAR	HOUR	SCALAR	HOUR	SCALAR	HOUR	SCALAR	HOUR	SCALAR	HOUR	SCALAR	HOUR	SCALAR	HOUR	SCALAR

DAY OF WEEK = WEEKDAY

1	.0000E+00	2	.0000E+00	3	.0000E+00	4	.0000E+00	5	.0000E+00	6	.0000E+00	7	.1000E+01	8	.1000E+01
9	.1000E+01	10	.1000E+01	11	.1000E+01	12	.1000E+01	13	.1000E+01	14	.1000E+01	15	.1000E+01	16	.1000E+01
17	.0000E+00	18	.0000E+00	19	.0000E+00	20	.0000E+00	21	.0000E+00	22	.0000E+00	23	.0000E+00	24	.0000E+00

DAY OF WEEK = SATURDAY

1	.0000E+00	2	.0000E+00	3	.0000E+00	4	.0000E+00	5	.0000E+00	6	.0000E+00	7	.0000E+00	8	.0000E+00
9	.0000E+00	10	.0000E+00	11	.0000E+00	12	.0000E+00	13	.0000E+00	14	.0000E+00	15	.0000E+00	16	.0000E+00
17	.0000E+00	18	.0000E+00	19	.0000E+00	20	.0000E+00	21	.0000E+00	22	.0000E+00	23	.0000E+00	24	.0000E+00

DAY OF WEEK = SUNDAY

1	.0000E+00	2	.0000E+00	3	.0000E+00	4	.0000E+00	5	.0000E+00	6	.0000E+00	7	.0000E+00	8	.0000E+00
9	.0000E+00	10	.0000E+00	11	.0000E+00	12	.0000E+00	13	.0000E+00	14	.0000E+00	15	.0000E+00	16	.0000E+00
17	.0000E+00	18	.0000E+00	19	.0000E+00	20	.0000E+00	21	.0000E+00	22	.0000E+00	23	.0000E+00	24	.0000E+00

*** MODELOPTs: RegDFAULT CONC ELEV URBAN ADJ_U*

* SOURCE EMISSION RATE SCALARS WHICH VARY DIURNALLY AND BY DAY OF WEEK (HRDOW) *

SOURCE ID = L0002074 ; SOURCE TYPE = VOLUME :

HOUR	SCALAR	HOUR	SCALAR	HOUR	SCALAR	HOUR	SCALAR	HOUR	SCALAR	HOUR	SCALAR	HOUR	SCALAR	HOUR	SCALAR

DAY OF WEEK = WEEKDAY

1	.0000E+00	2	.0000E+00	3	.0000E+00	4	.0000E+00	5	.0000E+00	6	.0000E+00	7	.1000E+01	8	.1000E+01
9	.1000E+01	10	.1000E+01	11	.1000E+01	12	.1000E+01	13	.1000E+01	14	.1000E+01	15	.1000E+01	16	.1000E+01
17	.0000E+00	18	.0000E+00	19	.0000E+00	20	.0000E+00	21	.0000E+00	22	.0000E+00	23	.0000E+00	24	.0000E+00

DAY OF WEEK = SATURDAY

1	.0000E+00	2	.0000E+00	3	.0000E+00	4	.0000E+00	5	.0000E+00	6	.0000E+00	7	.0000E+00	8	.0000E+00
9	.0000E+00	10	.0000E+00	11	.0000E+00	12	.0000E+00	13	.0000E+00	14	.0000E+00	15	.0000E+00	16	.0000E+00
17	.0000E+00	18	.0000E+00	19	.0000E+00	20	.0000E+00	21	.0000E+00	22	.0000E+00	23	.0000E+00	24	.0000E+00

DAY OF WEEK = SUNDAY

1	.0000E+00	2	.0000E+00	3	.0000E+00	4	.0000E+00	5	.0000E+00	6	.0000E+00	7	.0000E+00	8	.0000E+00
9	.0000E+00	10	.0000E+00	11	.0000E+00	12	.0000E+00	13	.0000E+00	14	.0000E+00	15	.0000E+00	16	.0000E+00
17	.0000E+00	18	.0000E+00	19	.0000E+00	20	.0000E+00	21	.0000E+00	22	.0000E+00	23	.0000E+00	24	.0000E+00

```
 *** AERMOD - VERSION 22112  ***   *** C:\Lakes\Project Files\Garvey\Garvey.isc
***        03/04/24
 *** AERMET - VERSION  16216 ***   ***
***        13:00:54

PAGE 299
 *** MODELOPTs:    RegDFAULT  CONC  ELEV  URBAN  ADJ_U*

                   * SOURCE EMISSION RATE SCALARS WHICH VARY DIURNALLY AND BY DAY
OF WEEK (HRDOW) *

 SOURCE ID = L0002075     ; SOURCE TYPE = VOLUME   :
  HOUR   SCALAR   HOUR   SCALAR   HOUR   SCALAR   HOUR   SCALAR   HOUR   SCALAR
HOUR   SCALAR   HOUR   SCALAR   HOUR   SCALAR
 - - - - - - - - - - - - - - - - - - - - - - - - - - - - - - - - - - - - - - - -
- - - - - - - - - - - - - - - - - - - - - - - - -
                                                DAY OF WEEK = WEEKDAY
    1  .0000E+00    2  .0000E+00    3  .0000E+00    4  .0000E+00    5  .0000E+00
6  .0000E+00    7  .1000E+01    8  .1000E+01
    9  .1000E+01   10  .1000E+01   11  .1000E+01   12  .1000E+01   13  .1000E+01
14  .1000E+01   15  .1000E+01   16  .1000E+01
   17  .0000E+00   18  .0000E+00   19  .0000E+00   20  .0000E+00   21  .0000E+00
22  .0000E+00   23  .0000E+00   24  .0000E+00
                                                DAY OF WEEK = SATURDAY
    1  .0000E+00    2  .0000E+00    3  .0000E+00    4  .0000E+00    5  .0000E+00
6  .0000E+00    7  .0000E+00    8  .0000E+00
    9  .0000E+00   10  .0000E+00   11  .0000E+00   12  .0000E+00   13  .0000E+00
14  .0000E+00   15  .0000E+00   16  .0000E+00
   17  .0000E+00   18  .0000E+00   19  .0000E+00   20  .0000E+00   21  .0000E+00
22  .0000E+00   23  .0000E+00   24  .0000E+00
                                                DAY OF WEEK = SUNDAY
    1  .0000E+00    2  .0000E+00    3  .0000E+00    4  .0000E+00    5  .0000E+00
6  .0000E+00    7  .0000E+00    8  .0000E+00
    9  .0000E+00   10  .0000E+00   11  .0000E+00   12  .0000E+00   13  .0000E+00
14  .0000E+00   15  .0000E+00   16  .0000E+00
   17  .0000E+00   18  .0000E+00   19  .0000E+00   20  .0000E+00   21  .0000E+00
22  .0000E+00   23  .0000E+00   24  .0000E+00
```

```
 *** AERMOD - VERSION 22112  ***   *** C:\Lakes\Project Files\Garvey\Garvey.isc
***        03/04/24
 *** AERMET - VERSION  16216 ***   ***
***        13:00:54

PAGE 300
 *** MODELOPTs:    RegDFAULT  CONC  ELEV  URBAN  ADJ_U*

                   * SOURCE EMISSION RATE SCALARS WHICH VARY DIURNALLY AND BY DAY
OF WEEK (HRDOW) *

 SOURCE ID = L0002076     ; SOURCE TYPE = VOLUME   :
  HOUR   SCALAR   HOUR   SCALAR   HOUR   SCALAR   HOUR   SCALAR   HOUR   SCALAR
HOUR   SCALAR   HOUR   SCALAR   HOUR   SCALAR
 - - - - - - - - - - - - - - - - - - - - - - - - - - - - - - - - - - - - - - - -
- - - - - - - - - - - - - - - - - - - - - - - - -
                                                DAY OF WEEK = WEEKDAY
    1  .0000E+00    2  .0000E+00    3  .0000E+00    4  .0000E+00    5  .0000E+00
6  .0000E+00    7  .1000E+01    8  .1000E+01
    9  .1000E+01   10  .1000E+01   11  .1000E+01   12  .1000E+01   13  .1000E+01
14  .1000E+01   15  .1000E+01   16  .1000E+01
   17  .0000E+00   18  .0000E+00   19  .0000E+00   20  .0000E+00   21  .0000E+00
22  .0000E+00   23  .0000E+00   24  .0000E+00
                                                DAY OF WEEK = SATURDAY
    1  .0000E+00    2  .0000E+00    3  .0000E+00    4  .0000E+00    5  .0000E+00
6  .0000E+00    7  .0000E+00    8  .0000E+00
    9  .0000E+00   10  .0000E+00   11  .0000E+00   12  .0000E+00   13  .0000E+00
14  .0000E+00   15  .0000E+00   16  .0000E+00
   17  .0000E+00   18  .0000E+00   19  .0000E+00   20  .0000E+00   21  .0000E+00
22  .0000E+00   23  .0000E+00   24  .0000E+00
                                                DAY OF WEEK = SUNDAY
    1  .0000E+00    2  .0000E+00    3  .0000E+00    4  .0000E+00    5  .0000E+00
6  .0000E+00    7  .0000E+00    8  .0000E+00
    9  .0000E+00   10  .0000E+00   11  .0000E+00   12  .0000E+00   13  .0000E+00
14  .0000E+00   15  .0000E+00   16  .0000E+00
   17  .0000E+00   18  .0000E+00   19  .0000E+00   20  .0000E+00   21  .0000E+00
22  .0000E+00   23  .0000E+00   24  .0000E+00
```

```
 *** AERMOD - VERSION 22112  ***   *** C:\Lakes\Project Files\Garvey\Garvey.isc
***        03/04/24
 *** AERMET - VERSION  16216 ***   ***
***        13:00:54

PAGE 301
 *** MODELOPTs:    RegDFAULT  CONC  ELEV  URBAN  ADJ_U*

                   * SOURCE EMISSION RATE SCALARS WHICH VARY DIURNALLY AND BY DAY
OF WEEK (HRDOW) *

 SOURCE ID = L0002077     ; SOURCE TYPE = VOLUME   :
  HOUR   SCALAR   HOUR   SCALAR   HOUR   SCALAR   HOUR   SCALAR   HOUR   SCALAR
HOUR   SCALAR   HOUR   SCALAR   HOUR   SCALAR
 - - - - - - - - - - - - - - - - - - - - - - - - - - - - - - - - - - - - - - - -
- - - - - - - - - - - - - - - - - - - - - - - - -
                                                DAY OF WEEK = WEEKDAY
    1  .0000E+00    2  .0000E+00    3  .0000E+00    4  .0000E+00    5  .0000E+00
6  .0000E+00    7  .1000E+01    8  .1000E+01
    9  .1000E+01   10  .1000E+01   11  .1000E+01   12  .1000E+01   13  .1000E+01
14  .1000E+01   15  .1000E+01   16  .1000E+01
   17  .0000E+00   18  .0000E+00   19  .0000E+00   20  .0000E+00   21  .0000E+00
22  .0000E+00   23  .0000E+00   24  .0000E+00
                                                DAY OF WEEK = SATURDAY
    1  .0000E+00    2  .0000E+00    3  .0000E+00    4  .0000E+00    5  .0000E+00
6  .0000E+00    7  .0000E+00    8  .0000E+00
    9  .0000E+00   10  .0000E+00   11  .0000E+00   12  .0000E+00   13  .0000E+00
14  .0000E+00   15  .0000E+00   16  .0000E+00
   17  .0000E+00   18  .0000E+00   19  .0000E+00   20  .0000E+00   21  .0000E+00
22  .0000E+00   23  .0000E+00   24  .0000E+00
                                                DAY OF WEEK = SUNDAY
    1  .0000E+00    2  .0000E+00    3  .0000E+00    4  .0000E+00    5  .0000E+00
6  .0000E+00    7  .0000E+00    8  .0000E+00
    9  .0000E+00   10  .0000E+00   11  .0000E+00   12  .0000E+00   13  .0000E+00
14  .0000E+00   15  .0000E+00   16  .0000E+00
   17  .0000E+00   18  .0000E+00   19  .0000E+00   20  .0000E+00   21  .0000E+00
22  .0000E+00   23  .0000E+00   24  .0000E+00
```

*** MODELOPTs: RegDFAULT CONC ELEV URBAN ADJ_U*

* SOURCE EMISSION RATE SCALARS WHICH VARY DIURNALLY AND BY DAY OF WEEK (HRDOW) *

SOURCE ID = L0002078 ; SOURCE TYPE = VOLUME :

HOUR	SCALAR	HOUR	SCALAR	HOUR	SCALAR	HOUR	SCALAR	HOUR	SCALAR	HOUR	SCALAR	HOUR	SCALAR	HOUR	SCALAR

DAY OF WEEK = WEEKDAY

1	.0000E+00	2	.0000E+00	3	.0000E+00	4	.0000E+00	5	.0000E+00	6	.0000E+00	7	.1000E+01	8	.1000E+01
9	.1000E+01	10	.1000E+01	11	.1000E+01	12	.1000E+01	13	.1000E+01	14	.1000E+01	15	.1000E+01	16	.1000E+01
17	.0000E+00	18	.0000E+00	19	.0000E+00	20	.0000E+00	21	.0000E+00	22	.0000E+00	23	.0000E+00	24	.0000E+00

DAY OF WEEK = SATURDAY

1	.0000E+00	2	.0000E+00	3	.0000E+00	4	.0000E+00	5	.0000E+00	6	.0000E+00	7	.0000E+00	8	.0000E+00
9	.0000E+00	10	.0000E+00	11	.0000E+00	12	.0000E+00	13	.0000E+00	14	.0000E+00	15	.0000E+00	16	.0000E+00
17	.0000E+00	18	.0000E+00	19	.0000E+00	20	.0000E+00	21	.0000E+00	22	.0000E+00	23	.0000E+00	24	.0000E+00

DAY OF WEEK = SUNDAY

1	.0000E+00	2	.0000E+00	3	.0000E+00	4	.0000E+00	5	.0000E+00	6	.0000E+00	7	.0000E+00	8	.0000E+00
9	.0000E+00	10	.0000E+00	11	.0000E+00	12	.0000E+00	13	.0000E+00	14	.0000E+00	15	.0000E+00	16	.0000E+00
17	.0000E+00	18	.0000E+00	19	.0000E+00	20	.0000E+00	21	.0000E+00	22	.0000E+00	23	.0000E+00	24	.0000E+00

*** MODELOPTs: RegDFAULT CONC ELEV URBAN ADJ_U*

* SOURCE EMISSION RATE SCALARS WHICH VARY DIURNALLY AND BY DAY OF WEEK (HRDOW) *

SOURCE ID = L0002079 ; SOURCE TYPE = VOLUME :

HOUR	SCALAR	HOUR	SCALAR	HOUR	SCALAR	HOUR	SCALAR	HOUR	SCALAR	HOUR	SCALAR	HOUR	SCALAR	HOUR	SCALAR

DAY OF WEEK = WEEKDAY

1	.0000E+00	2	.0000E+00	3	.0000E+00	4	.0000E+00	5	.0000E+00	6	.0000E+00	7	.1000E+01	8	.1000E+01
9	.1000E+01	10	.1000E+01	11	.1000E+01	12	.1000E+01	13	.1000E+01	14	.1000E+01	15	.1000E+01	16	.1000E+01
17	.0000E+00	18	.0000E+00	19	.0000E+00	20	.0000E+00	21	.0000E+00	22	.0000E+00	23	.0000E+00	24	.0000E+00

DAY OF WEEK = SATURDAY

1	.0000E+00	2	.0000E+00	3	.0000E+00	4	.0000E+00	5	.0000E+00	6	.0000E+00	7	.0000E+00	8	.0000E+00
9	.0000E+00	10	.0000E+00	11	.0000E+00	12	.0000E+00	13	.0000E+00	14	.0000E+00	15	.0000E+00	16	.0000E+00
17	.0000E+00	18	.0000E+00	19	.0000E+00	20	.0000E+00	21	.0000E+00	22	.0000E+00	23	.0000E+00	24	.0000E+00

DAY OF WEEK = SUNDAY

1	.0000E+00	2	.0000E+00	3	.0000E+00	4	.0000E+00	5	.0000E+00	6	.0000E+00	7	.0000E+00	8	.0000E+00
9	.0000E+00	10	.0000E+00	11	.0000E+00	12	.0000E+00	13	.0000E+00	14	.0000E+00	15	.0000E+00	16	.0000E+00
17	.0000E+00	18	.0000E+00	19	.0000E+00	20	.0000E+00	21	.0000E+00	22	.0000E+00	23	.0000E+00	24	.0000E+00

```
 *** AERMOD - VERSION 22112  ***   *** C:\Lakes\Project Files\Garvey\Garvey.isc
***        03/04/24
 *** AERMET - VERSION  16216 ***   ***
***        13:00:54

PAGE 304
 *** MODELOPTs:    RegDFAULT  CONC  ELEV  URBAN  ADJ_U*

                   * SOURCE EMISSION RATE SCALARS WHICH VARY DIURNALLY AND BY DAY
OF WEEK (HRDOW) *

 SOURCE ID = L0002080     ; SOURCE TYPE = VOLUME   :
  HOUR   SCALAR   HOUR   SCALAR   HOUR   SCALAR   HOUR   SCALAR   HOUR   SCALAR
HOUR   SCALAR   HOUR   SCALAR   HOUR   SCALAR
 - - - - - - - - - - - - - - - - - - - - - - - - - - - - - - - - - - - - - - - -
- - - - - - - - - - - - - - - - - - - - - - - - -
                                                DAY OF WEEK = WEEKDAY
    1  .0000E+00    2  .0000E+00    3  .0000E+00    4  .0000E+00    5  .0000E+00
6  .0000E+00    7  .1000E+01    8  .1000E+01
    9  .1000E+01   10  .1000E+01   11  .1000E+01   12  .1000E+01   13  .1000E+01
14  .1000E+01   15  .1000E+01   16  .1000E+01
   17  .0000E+00   18  .0000E+00   19  .0000E+00   20  .0000E+00   21  .0000E+00
22  .0000E+00   23  .0000E+00   24  .0000E+00
                                                DAY OF WEEK = SATURDAY
    1  .0000E+00    2  .0000E+00    3  .0000E+00    4  .0000E+00    5  .0000E+00
6  .0000E+00    7  .0000E+00    8  .0000E+00
    9  .0000E+00   10  .0000E+00   11  .0000E+00   12  .0000E+00   13  .0000E+00
14  .0000E+00   15  .0000E+00   16  .0000E+00
   17  .0000E+00   18  .0000E+00   19  .0000E+00   20  .0000E+00   21  .0000E+00
22  .0000E+00   23  .0000E+00   24  .0000E+00
                                                DAY OF WEEK = SUNDAY
    1  .0000E+00    2  .0000E+00    3  .0000E+00    4  .0000E+00    5  .0000E+00
6  .0000E+00    7  .0000E+00    8  .0000E+00
    9  .0000E+00   10  .0000E+00   11  .0000E+00   12  .0000E+00   13  .0000E+00
14  .0000E+00   15  .0000E+00   16  .0000E+00
   17  .0000E+00   18  .0000E+00   19  .0000E+00   20  .0000E+00   21  .0000E+00
22  .0000E+00   23  .0000E+00   24  .0000E+00
```

```
 *** AERMOD - VERSION 22112  ***   *** C:\Lakes\Project Files\Garvey\Garvey.isc
***        03/04/24
 *** AERMET - VERSION  16216 ***   ***
***        13:00:54

PAGE 305
 *** MODELOPTs:    RegDFAULT  CONC  ELEV  URBAN  ADJ_U*

                   * SOURCE EMISSION RATE SCALARS WHICH VARY DIURNALLY AND BY DAY
OF WEEK (HRDOW) *

 SOURCE ID = L0002081     ; SOURCE TYPE = VOLUME   :
  HOUR   SCALAR   HOUR   SCALAR   HOUR   SCALAR   HOUR   SCALAR   HOUR   SCALAR
HOUR   SCALAR   HOUR   SCALAR   HOUR   SCALAR
 - - - - - - - - - - - - - - - - - - - - - - - - - - - - - - - - - - - - - - - -
- - - - - - - - - - - - - - - - - - - - - - - - -
                                                DAY OF WEEK = WEEKDAY
    1  .0000E+00    2  .0000E+00    3  .0000E+00    4  .0000E+00    5  .0000E+00
6  .0000E+00    7  .1000E+01    8  .1000E+01
    9  .1000E+01   10  .1000E+01   11  .1000E+01   12  .1000E+01   13  .1000E+01
14  .1000E+01   15  .1000E+01   16  .1000E+01
   17  .0000E+00   18  .0000E+00   19  .0000E+00   20  .0000E+00   21  .0000E+00
22  .0000E+00   23  .0000E+00   24  .0000E+00
                                                DAY OF WEEK = SATURDAY
    1  .0000E+00    2  .0000E+00    3  .0000E+00    4  .0000E+00    5  .0000E+00
6  .0000E+00    7  .0000E+00    8  .0000E+00
    9  .0000E+00   10  .0000E+00   11  .0000E+00   12  .0000E+00   13  .0000E+00
14  .0000E+00   15  .0000E+00   16  .0000E+00
   17  .0000E+00   18  .0000E+00   19  .0000E+00   20  .0000E+00   21  .0000E+00
22  .0000E+00   23  .0000E+00   24  .0000E+00
                                                DAY OF WEEK = SUNDAY
    1  .0000E+00    2  .0000E+00    3  .0000E+00    4  .0000E+00    5  .0000E+00
6  .0000E+00    7  .0000E+00    8  .0000E+00
    9  .0000E+00   10  .0000E+00   11  .0000E+00   12  .0000E+00   13  .0000E+00
14  .0000E+00   15  .0000E+00   16  .0000E+00
   17  .0000E+00   18  .0000E+00   19  .0000E+00   20  .0000E+00   21  .0000E+00
22  .0000E+00   23  .0000E+00   24  .0000E+00
```

*** MODELOPTs: RegDFAULT CONC ELEV URBAN ADJ_U*

* SOURCE EMISSION RATE SCALARS WHICH VARY DIURNALLY AND BY DAY OF WEEK (HRDOW) *

SOURCE ID = L0002082 ; SOURCE TYPE = VOLUME :

HOUR	SCALAR	HOUR	SCALAR	HOUR	SCALAR	HOUR	SCALAR	HOUR	SCALAR	HOUR	SCALAR	HOUR	SCALAR	HOUR	SCALAR

DAY OF WEEK = WEEKDAY

1	.0000E+00	2	.0000E+00	3	.0000E+00	4	.0000E+00	5	.0000E+00	6	.0000E+00	7	.1000E+01	8	.1000E+01
9	.1000E+01	10	.1000E+01	11	.1000E+01	12	.1000E+01	13	.1000E+01	14	.1000E+01	15	.1000E+01	16	.1000E+01
17	.0000E+00	18	.0000E+00	19	.0000E+00	20	.0000E+00	21	.0000E+00	22	.0000E+00	23	.0000E+00	24	.0000E+00

DAY OF WEEK = SATURDAY

1	.0000E+00	2	.0000E+00	3	.0000E+00	4	.0000E+00	5	.0000E+00	6	.0000E+00	7	.0000E+00	8	.0000E+00
9	.0000E+00	10	.0000E+00	11	.0000E+00	12	.0000E+00	13	.0000E+00	14	.0000E+00	15	.0000E+00	16	.0000E+00
17	.0000E+00	18	.0000E+00	19	.0000E+00	20	.0000E+00	21	.0000E+00	22	.0000E+00	23	.0000E+00	24	.0000E+00

DAY OF WEEK = SUNDAY

1	.0000E+00	2	.0000E+00	3	.0000E+00	4	.0000E+00	5	.0000E+00	6	.0000E+00	7	.0000E+00	8	.0000E+00
9	.0000E+00	10	.0000E+00	11	.0000E+00	12	.0000E+00	13	.0000E+00	14	.0000E+00	15	.0000E+00	16	.0000E+00
17	.0000E+00	18	.0000E+00	19	.0000E+00	20	.0000E+00	21	.0000E+00	22	.0000E+00	23	.0000E+00	24	.0000E+00

*** MODELOPTs: RegDFAULT CONC ELEV URBAN ADJ_U*

* SOURCE EMISSION RATE SCALARS WHICH VARY DIURNALLY AND BY DAY OF WEEK (HRDOW) *

SOURCE ID = L0002083 ; SOURCE TYPE = VOLUME :

HOUR	SCALAR	HOUR	SCALAR	HOUR	SCALAR	HOUR	SCALAR	HOUR	SCALAR	HOUR	SCALAR	HOUR	SCALAR	HOUR	SCALAR

DAY OF WEEK = WEEKDAY

1	.0000E+00	2	.0000E+00	3	.0000E+00	4	.0000E+00	5	.0000E+00	6	.0000E+00	7	.1000E+01	8	.1000E+01
9	.1000E+01	10	.1000E+01	11	.1000E+01	12	.1000E+01	13	.1000E+01	14	.1000E+01	15	.1000E+01	16	.1000E+01
17	.0000E+00	18	.0000E+00	19	.0000E+00	20	.0000E+00	21	.0000E+00	22	.0000E+00	23	.0000E+00	24	.0000E+00

DAY OF WEEK = SATURDAY

1	.0000E+00	2	.0000E+00	3	.0000E+00	4	.0000E+00	5	.0000E+00	6	.0000E+00	7	.0000E+00	8	.0000E+00
9	.0000E+00	10	.0000E+00	11	.0000E+00	12	.0000E+00	13	.0000E+00	14	.0000E+00	15	.0000E+00	16	.0000E+00
17	.0000E+00	18	.0000E+00	19	.0000E+00	20	.0000E+00	21	.0000E+00	22	.0000E+00	23	.0000E+00	24	.0000E+00

DAY OF WEEK = SUNDAY

1	.0000E+00	2	.0000E+00	3	.0000E+00	4	.0000E+00	5	.0000E+00	6	.0000E+00	7	.0000E+00	8	.0000E+00
9	.0000E+00	10	.0000E+00	11	.0000E+00	12	.0000E+00	13	.0000E+00	14	.0000E+00	15	.0000E+00	16	.0000E+00
17	.0000E+00	18	.0000E+00	19	.0000E+00	20	.0000E+00	21	.0000E+00	22	.0000E+00	23	.0000E+00	24	.0000E+00

*** MODELOPTs: RegDFAULT CONC ELEV URBAN ADJ_U*

* SOURCE EMISSION RATE SCALARS WHICH VARY DIURNALLY AND BY DAY OF WEEK (HRDOW) *

SOURCE ID = L0002084 ; SOURCE TYPE = VOLUME :

HOUR	SCALAR	HOUR	SCALAR	HOUR	SCALAR	HOUR	SCALAR	HOUR	SCALAR	HOUR	SCALAR	HOUR	SCALAR	HOUR	SCALAR

DAY OF WEEK = WEEKDAY

1	.0000E+00	2	.0000E+00	3	.0000E+00	4	.0000E+00	5	.0000E+00	6	.0000E+00	7	.1000E+01	8	.1000E+01
9	.1000E+01	10	.1000E+01	11	.1000E+01	12	.1000E+01	13	.1000E+01	14	.1000E+01	15	.1000E+01	16	.1000E+01
17	.0000E+00	18	.0000E+00	19	.0000E+00	20	.0000E+00	21	.0000E+00	22	.0000E+00	23	.0000E+00	24	.0000E+00

DAY OF WEEK = SATURDAY

1	.0000E+00	2	.0000E+00	3	.0000E+00	4	.0000E+00	5	.0000E+00	6	.0000E+00	7	.0000E+00	8	.0000E+00
9	.0000E+00	10	.0000E+00	11	.0000E+00	12	.0000E+00	13	.0000E+00	14	.0000E+00	15	.0000E+00	16	.0000E+00
17	.0000E+00	18	.0000E+00	19	.0000E+00	20	.0000E+00	21	.0000E+00	22	.0000E+00	23	.0000E+00	24	.0000E+00

DAY OF WEEK = SUNDAY

1	.0000E+00	2	.0000E+00	3	.0000E+00	4	.0000E+00	5	.0000E+00	6	.0000E+00	7	.0000E+00	8	.0000E+00
9	.0000E+00	10	.0000E+00	11	.0000E+00	12	.0000E+00	13	.0000E+00	14	.0000E+00	15	.0000E+00	16	.0000E+00
17	.0000E+00	18	.0000E+00	19	.0000E+00	20	.0000E+00	21	.0000E+00	22	.0000E+00	23	.0000E+00	24	.0000E+00

*** MODELOPTs: RegDFAULT CONC ELEV URBAN ADJ_U*

* SOURCE EMISSION RATE SCALARS WHICH VARY DIURNALLY AND BY DAY OF WEEK (HRDOW) *

SOURCE ID = L0002085 ; SOURCE TYPE = VOLUME :

HOUR	SCALAR	HOUR	SCALAR	HOUR	SCALAR	HOUR	SCALAR	HOUR	SCALAR	HOUR	SCALAR	HOUR	SCALAR	HOUR	SCALAR

DAY OF WEEK = WEEKDAY

1	.0000E+00	2	.0000E+00	3	.0000E+00	4	.0000E+00	5	.0000E+00	6	.0000E+00	7	.1000E+01	8	.1000E+01
9	.1000E+01	10	.1000E+01	11	.1000E+01	12	.1000E+01	13	.1000E+01	14	.1000E+01	15	.1000E+01	16	.1000E+01
17	.0000E+00	18	.0000E+00	19	.0000E+00	20	.0000E+00	21	.0000E+00	22	.0000E+00	23	.0000E+00	24	.0000E+00

DAY OF WEEK = SATURDAY

1	.0000E+00	2	.0000E+00	3	.0000E+00	4	.0000E+00	5	.0000E+00	6	.0000E+00	7	.0000E+00	8	.0000E+00
9	.0000E+00	10	.0000E+00	11	.0000E+00	12	.0000E+00	13	.0000E+00	14	.0000E+00	15	.0000E+00	16	.0000E+00
17	.0000E+00	18	.0000E+00	19	.0000E+00	20	.0000E+00	21	.0000E+00	22	.0000E+00	23	.0000E+00	24	.0000E+00

DAY OF WEEK = SUNDAY

1	.0000E+00	2	.0000E+00	3	.0000E+00	4	.0000E+00	5	.0000E+00	6	.0000E+00	7	.0000E+00	8	.0000E+00
9	.0000E+00	10	.0000E+00	11	.0000E+00	12	.0000E+00	13	.0000E+00	14	.0000E+00	15	.0000E+00	16	.0000E+00
17	.0000E+00	18	.0000E+00	19	.0000E+00	20	.0000E+00	21	.0000E+00	22	.0000E+00	23	.0000E+00	24	.0000E+00

```
 *** AERMOD - VERSION 22112  ***   *** C:\Lakes\Project Files\Garvey\Garvey.isc
***        03/04/24
 *** AERMET - VERSION  16216 ***   ***
***        13:00:54

PAGE 310
 *** MODELOPTs:    RegDFAULT  CONC  ELEV  URBAN  ADJ_U*

                   * SOURCE EMISSION RATE SCALARS WHICH VARY DIURNALLY AND BY DAY
OF WEEK (HRDOW) *

 SOURCE ID = L0002086     ; SOURCE TYPE = VOLUME   :
  HOUR   SCALAR   HOUR   SCALAR   HOUR   SCALAR   HOUR   SCALAR   HOUR   SCALAR
HOUR   SCALAR   HOUR   SCALAR   HOUR   SCALAR
 - - - - - - - - - - - - - - - - - - - - - - - - - - - - - - - - - - - - - - - -
- - - - - - - - - - - - - - - - - - - - - - - - -
                                                DAY OF WEEK = WEEKDAY
    1  .0000E+00    2  .0000E+00    3  .0000E+00    4  .0000E+00    5  .0000E+00
6  .0000E+00    7  .1000E+01    8  .1000E+01
    9  .1000E+01   10  .1000E+01   11  .1000E+01   12  .1000E+01   13  .1000E+01
14  .1000E+01   15  .1000E+01   16  .1000E+01
   17  .0000E+00   18  .0000E+00   19  .0000E+00   20  .0000E+00   21  .0000E+00
22  .0000E+00   23  .0000E+00   24  .0000E+00
                                                DAY OF WEEK = SATURDAY
    1  .0000E+00    2  .0000E+00    3  .0000E+00    4  .0000E+00    5  .0000E+00
6  .0000E+00    7  .0000E+00    8  .0000E+00
    9  .0000E+00   10  .0000E+00   11  .0000E+00   12  .0000E+00   13  .0000E+00
14  .0000E+00   15  .0000E+00   16  .0000E+00
   17  .0000E+00   18  .0000E+00   19  .0000E+00   20  .0000E+00   21  .0000E+00
22  .0000E+00   23  .0000E+00   24  .0000E+00
                                                DAY OF WEEK = SUNDAY
    1  .0000E+00    2  .0000E+00    3  .0000E+00    4  .0000E+00    5  .0000E+00
6  .0000E+00    7  .0000E+00    8  .0000E+00
    9  .0000E+00   10  .0000E+00   11  .0000E+00   12  .0000E+00   13  .0000E+00
14  .0000E+00   15  .0000E+00   16  .0000E+00
   17  .0000E+00   18  .0000E+00   19  .0000E+00   20  .0000E+00   21  .0000E+00
22  .0000E+00   23  .0000E+00   24  .0000E+00
```

```
 *** AERMOD - VERSION 22112  ***   *** C:\Lakes\Project Files\Garvey\Garvey.isc
***        03/04/24
 *** AERMET - VERSION  16216 ***   ***
***        13:00:54

PAGE 311
 *** MODELOPTs:    RegDFAULT  CONC  ELEV  URBAN  ADJ_U*

                   * SOURCE EMISSION RATE SCALARS WHICH VARY DIURNALLY AND BY DAY
OF WEEK (HRDOW) *

 SOURCE ID = L0003711     ; SOURCE TYPE = VOLUME   :
  HOUR   SCALAR   HOUR   SCALAR   HOUR   SCALAR   HOUR   SCALAR   HOUR   SCALAR
HOUR   SCALAR   HOUR   SCALAR   HOUR   SCALAR
 - - - - - - - - - - - - - - - - - - - - - - - - - - - - - - - - - - - - - - - -
- - - - - - - - - - - - - - - - - - - - - - - - -
                                                DAY OF WEEK = WEEKDAY
    1  .0000E+00    2  .0000E+00    3  .0000E+00    4  .0000E+00    5  .0000E+00
6  .0000E+00    7  .1000E+01    8  .1000E+01
    9  .1000E+01   10  .1000E+01   11  .1000E+01   12  .1000E+01   13  .1000E+01
14  .1000E+01   15  .1000E+01   16  .1000E+01
   17  .0000E+00   18  .0000E+00   19  .0000E+00   20  .0000E+00   21  .0000E+00
22  .0000E+00   23  .0000E+00   24  .0000E+00
                                                DAY OF WEEK = SATURDAY
    1  .0000E+00    2  .0000E+00    3  .0000E+00    4  .0000E+00    5  .0000E+00
6  .0000E+00    7  .0000E+00    8  .0000E+00
    9  .0000E+00   10  .0000E+00   11  .0000E+00   12  .0000E+00   13  .0000E+00
14  .0000E+00   15  .0000E+00   16  .0000E+00
   17  .0000E+00   18  .0000E+00   19  .0000E+00   20  .0000E+00   21  .0000E+00
22  .0000E+00   23  .0000E+00   24  .0000E+00
                                                DAY OF WEEK = SUNDAY
    1  .0000E+00    2  .0000E+00    3  .0000E+00    4  .0000E+00    5  .0000E+00
6  .0000E+00    7  .0000E+00    8  .0000E+00
    9  .0000E+00   10  .0000E+00   11  .0000E+00   12  .0000E+00   13  .0000E+00
14  .0000E+00   15  .0000E+00   16  .0000E+00
   17  .0000E+00   18  .0000E+00   19  .0000E+00   20  .0000E+00   21  .0000E+00
22  .0000E+00   23  .0000E+00   24  .0000E+00
```

```
 *** AERMOD - VERSION 22112  ***   *** C:\Lakes\Project Files\Garvey\Garvey.isc
***        03/04/24
 *** AERMET - VERSION  16216 ***   ***
***        13:00:54

PAGE 312
 *** MODELOPTs:    RegDFAULT  CONC  ELEV  URBAN  ADJ_U*

                   * SOURCE EMISSION RATE SCALARS WHICH VARY DIURNALLY AND BY DAY
OF WEEK (HRDOW) *

 SOURCE ID = L0003712     ; SOURCE TYPE = VOLUME   :
  HOUR   SCALAR   HOUR   SCALAR   HOUR   SCALAR   HOUR   SCALAR   HOUR   SCALAR
HOUR   SCALAR   HOUR   SCALAR   HOUR   SCALAR
 - - - - - - - - - - - - - - - - - - - - - - - - - - - - - - - - - - - - - - - -
- - - - - - - - - - - - - - - - - - - - - - - - -
                                                DAY OF WEEK = WEEKDAY
    1  .0000E+00    2  .0000E+00    3  .0000E+00    4  .0000E+00    5  .0000E+00
6  .0000E+00    7  .1000E+01    8  .1000E+01
    9  .1000E+01   10  .1000E+01   11  .1000E+01   12  .1000E+01   13  .1000E+01
14  .1000E+01   15  .1000E+01   16  .1000E+01
   17  .0000E+00   18  .0000E+00   19  .0000E+00   20  .0000E+00   21  .0000E+00
22  .0000E+00   23  .0000E+00   24  .0000E+00
                                                DAY OF WEEK = SATURDAY
    1  .0000E+00    2  .0000E+00    3  .0000E+00    4  .0000E+00    5  .0000E+00
6  .0000E+00    7  .0000E+00    8  .0000E+00
    9  .0000E+00   10  .0000E+00   11  .0000E+00   12  .0000E+00   13  .0000E+00
14  .0000E+00   15  .0000E+00   16  .0000E+00
   17  .0000E+00   18  .0000E+00   19  .0000E+00   20  .0000E+00   21  .0000E+00
22  .0000E+00   23  .0000E+00   24  .0000E+00
                                                DAY OF WEEK = SUNDAY
    1  .0000E+00    2  .0000E+00    3  .0000E+00    4  .0000E+00    5  .0000E+00
6  .0000E+00    7  .0000E+00    8  .0000E+00
    9  .0000E+00   10  .0000E+00   11  .0000E+00   12  .0000E+00   13  .0000E+00
14  .0000E+00   15  .0000E+00   16  .0000E+00
   17  .0000E+00   18  .0000E+00   19  .0000E+00   20  .0000E+00   21  .0000E+00
22  .0000E+00   23  .0000E+00   24  .0000E+00
```

```
 *** AERMOD - VERSION 22112  ***   *** C:\Lakes\Project Files\Garvey\Garvey.isc
***        03/04/24
 *** AERMET - VERSION  16216 ***   ***
***        13:00:54

PAGE 313
 *** MODELOPTs:    RegDFAULT  CONC  ELEV  URBAN  ADJ_U*

                   * SOURCE EMISSION RATE SCALARS WHICH VARY DIURNALLY AND BY DAY
OF WEEK (HRDOW) *

 SOURCE ID = L0003713     ; SOURCE TYPE = VOLUME   :
  HOUR   SCALAR   HOUR   SCALAR   HOUR   SCALAR   HOUR   SCALAR   HOUR   SCALAR
HOUR   SCALAR   HOUR   SCALAR   HOUR   SCALAR
 - - - - - - - - - - - - - - - - - - - - - - - - - - - - - - - - - - - - - - - -
- - - - - - - - - - - - - - - - - - - - - - - - -
                                                DAY OF WEEK = WEEKDAY
    1  .0000E+00    2  .0000E+00    3  .0000E+00    4  .0000E+00    5  .0000E+00
6  .0000E+00    7  .1000E+01    8  .1000E+01
    9  .1000E+01   10  .1000E+01   11  .1000E+01   12  .1000E+01   13  .1000E+01
14  .1000E+01   15  .1000E+01   16  .1000E+01
   17  .0000E+00   18  .0000E+00   19  .0000E+00   20  .0000E+00   21  .0000E+00
22  .0000E+00   23  .0000E+00   24  .0000E+00
                                                DAY OF WEEK = SATURDAY
    1  .0000E+00    2  .0000E+00    3  .0000E+00    4  .0000E+00    5  .0000E+00
6  .0000E+00    7  .0000E+00    8  .0000E+00
    9  .0000E+00   10  .0000E+00   11  .0000E+00   12  .0000E+00   13  .0000E+00
14  .0000E+00   15  .0000E+00   16  .0000E+00
   17  .0000E+00   18  .0000E+00   19  .0000E+00   20  .0000E+00   21  .0000E+00
22  .0000E+00   23  .0000E+00   24  .0000E+00
                                                DAY OF WEEK = SUNDAY
    1  .0000E+00    2  .0000E+00    3  .0000E+00    4  .0000E+00    5  .0000E+00
6  .0000E+00    7  .0000E+00    8  .0000E+00
    9  .0000E+00   10  .0000E+00   11  .0000E+00   12  .0000E+00   13  .0000E+00
14  .0000E+00   15  .0000E+00   16  .0000E+00
   17  .0000E+00   18  .0000E+00   19  .0000E+00   20  .0000E+00   21  .0000E+00
22  .0000E+00   23  .0000E+00   24  .0000E+00
```

*** MODELOPTs: RegDFAULT CONC ELEV URBAN ADJ_U*

* SOURCE EMISSION RATE SCALARS WHICH VARY DIURNALLY AND BY DAY OF WEEK (HRDOW) *

SOURCE ID = L0003714 ; SOURCE TYPE = VOLUME :

HOUR	SCALAR	HOUR	SCALAR	HOUR	SCALAR	HOUR	SCALAR	HOUR	SCALAR	HOUR	SCALAR	HOUR	SCALAR	HOUR	SCALAR

DAY OF WEEK = WEEKDAY

1	.0000E+00	2	.0000E+00	3	.0000E+00	4	.0000E+00	5	.0000E+00	6	.0000E+00	7	.1000E+01	8	.1000E+01
9	.1000E+01	10	.1000E+01	11	.1000E+01	12	.1000E+01	13	.1000E+01	14	.1000E+01	15	.1000E+01	16	.1000E+01
17	.0000E+00	18	.0000E+00	19	.0000E+00	20	.0000E+00	21	.0000E+00	22	.0000E+00	23	.0000E+00	24	.0000E+00

DAY OF WEEK = SATURDAY

1	.0000E+00	2	.0000E+00	3	.0000E+00	4	.0000E+00	5	.0000E+00	6	.0000E+00	7	.0000E+00	8	.0000E+00
9	.0000E+00	10	.0000E+00	11	.0000E+00	12	.0000E+00	13	.0000E+00	14	.0000E+00	15	.0000E+00	16	.0000E+00
17	.0000E+00	18	.0000E+00	19	.0000E+00	20	.0000E+00	21	.0000E+00	22	.0000E+00	23	.0000E+00	24	.0000E+00

DAY OF WEEK = SUNDAY

1	.0000E+00	2	.0000E+00	3	.0000E+00	4	.0000E+00	5	.0000E+00	6	.0000E+00	7	.0000E+00	8	.0000E+00
9	.0000E+00	10	.0000E+00	11	.0000E+00	12	.0000E+00	13	.0000E+00	14	.0000E+00	15	.0000E+00	16	.0000E+00
17	.0000E+00	18	.0000E+00	19	.0000E+00	20	.0000E+00	21	.0000E+00	22	.0000E+00	23	.0000E+00	24	.0000E+00

```
 *** AERMOD - VERSION 22112  ***   *** C:\Lakes\Project Files\Garvey\Garvey.isc
***        03/04/24
 *** AERMET - VERSION  16216 ***   ***
***        13:00:54

PAGE 315
 *** MODELOPTs:    RegDFAULT  CONC  ELEV  URBAN  ADJ_U*

                   * SOURCE EMISSION RATE SCALARS WHICH VARY DIURNALLY AND BY DAY
OF WEEK (HRDOW) *

 SOURCE ID = L0003715     ; SOURCE TYPE = VOLUME   :
  HOUR   SCALAR   HOUR   SCALAR   HOUR   SCALAR   HOUR   SCALAR   HOUR   SCALAR
HOUR   SCALAR   HOUR   SCALAR   HOUR   SCALAR
 - - - - - - - - - - - - - - - - - - - - - - - - - - - - - - - - - - - - - - - -
- - - - - - - - - - - - - - - - - - - - - - - - -
                                                DAY OF WEEK = WEEKDAY
    1  .0000E+00    2  .0000E+00    3  .0000E+00    4  .0000E+00    5  .0000E+00
6  .0000E+00    7  .1000E+01    8  .1000E+01
    9  .1000E+01   10  .1000E+01   11  .1000E+01   12  .1000E+01   13  .1000E+01
14  .1000E+01   15  .1000E+01   16  .1000E+01
   17  .0000E+00   18  .0000E+00   19  .0000E+00   20  .0000E+00   21  .0000E+00
22  .0000E+00   23  .0000E+00   24  .0000E+00
                                                DAY OF WEEK = SATURDAY
    1  .0000E+00    2  .0000E+00    3  .0000E+00    4  .0000E+00    5  .0000E+00
6  .0000E+00    7  .0000E+00    8  .0000E+00
    9  .0000E+00   10  .0000E+00   11  .0000E+00   12  .0000E+00   13  .0000E+00
14  .0000E+00   15  .0000E+00   16  .0000E+00
   17  .0000E+00   18  .0000E+00   19  .0000E+00   20  .0000E+00   21  .0000E+00
22  .0000E+00   23  .0000E+00   24  .0000E+00
                                                DAY OF WEEK = SUNDAY
    1  .0000E+00    2  .0000E+00    3  .0000E+00    4  .0000E+00    5  .0000E+00
6  .0000E+00    7  .0000E+00    8  .0000E+00
    9  .0000E+00   10  .0000E+00   11  .0000E+00   12  .0000E+00   13  .0000E+00
14  .0000E+00   15  .0000E+00   16  .0000E+00
   17  .0000E+00   18  .0000E+00   19  .0000E+00   20  .0000E+00   21  .0000E+00
22  .0000E+00   23  .0000E+00   24  .0000E+00
```

```
 *** AERMOD - VERSION 22112  ***   *** C:\Lakes\Project Files\Garvey\Garvey.isc
***        03/04/24
 *** AERMET - VERSION  16216 ***   ***
***        13:00:54

PAGE 316
 *** MODELOPTs:    RegDFAULT  CONC  ELEV  URBAN  ADJ_U*

                   * SOURCE EMISSION RATE SCALARS WHICH VARY DIURNALLY AND BY DAY
OF WEEK (HRDOW) *

 SOURCE ID = L0003716     ; SOURCE TYPE = VOLUME   :
  HOUR   SCALAR   HOUR   SCALAR   HOUR   SCALAR   HOUR   SCALAR   HOUR   SCALAR
HOUR   SCALAR   HOUR   SCALAR   HOUR   SCALAR
 - - - - - - - - - - - - - - - - - - - - - - - - - - - - - - - - - - - - - - - -
- - - - - - - - - - - - - - - - - - - - - - - - -
                                                DAY OF WEEK = WEEKDAY
    1  .0000E+00    2  .0000E+00    3  .0000E+00    4  .0000E+00    5  .0000E+00
6  .0000E+00    7  .1000E+01    8  .1000E+01
    9  .1000E+01   10  .1000E+01   11  .1000E+01   12  .1000E+01   13  .1000E+01
14  .1000E+01   15  .1000E+01   16  .1000E+01
   17  .0000E+00   18  .0000E+00   19  .0000E+00   20  .0000E+00   21  .0000E+00
22  .0000E+00   23  .0000E+00   24  .0000E+00
                                                DAY OF WEEK = SATURDAY
    1  .0000E+00    2  .0000E+00    3  .0000E+00    4  .0000E+00    5  .0000E+00
6  .0000E+00    7  .0000E+00    8  .0000E+00
    9  .0000E+00   10  .0000E+00   11  .0000E+00   12  .0000E+00   13  .0000E+00
14  .0000E+00   15  .0000E+00   16  .0000E+00
   17  .0000E+00   18  .0000E+00   19  .0000E+00   20  .0000E+00   21  .0000E+00
22  .0000E+00   23  .0000E+00   24  .0000E+00
                                                DAY OF WEEK = SUNDAY
    1  .0000E+00    2  .0000E+00    3  .0000E+00    4  .0000E+00    5  .0000E+00
6  .0000E+00    7  .0000E+00    8  .0000E+00
    9  .0000E+00   10  .0000E+00   11  .0000E+00   12  .0000E+00   13  .0000E+00
14  .0000E+00   15  .0000E+00   16  .0000E+00
   17  .0000E+00   18  .0000E+00   19  .0000E+00   20  .0000E+00   21  .0000E+00
22  .0000E+00   23  .0000E+00   24  .0000E+00
```

```
 *** AERMOD - VERSION 22112  ***   *** C:\Lakes\Project Files\Garvey\Garvey.isc
***        03/04/24
 *** AERMET - VERSION  16216 ***   ***
***        13:00:54

PAGE 317
 *** MODELOPTs:    RegDFAULT  CONC  ELEV  URBAN  ADJ_U*

                   * SOURCE EMISSION RATE SCALARS WHICH VARY DIURNALLY AND BY DAY
OF WEEK (HRDOW) *

 SOURCE ID = L0003717     ; SOURCE TYPE = VOLUME   :
  HOUR   SCALAR   HOUR   SCALAR   HOUR   SCALAR   HOUR   SCALAR   HOUR   SCALAR
HOUR   SCALAR   HOUR   SCALAR   HOUR   SCALAR
 - - - - - - - - - - - - - - - - - - - - - - - - - - - - - - - - - - - - - - - -
- - - - - - - - - - - - - - - - - - - - - - - - - -
                                                DAY OF WEEK = WEEKDAY
    1  .0000E+00    2  .0000E+00    3  .0000E+00    4  .0000E+00    5  .0000E+00
6  .0000E+00    7  .1000E+01    8  .1000E+01
    9  .1000E+01   10  .1000E+01   11  .1000E+01   12  .1000E+01   13  .1000E+01
14  .1000E+01   15  .1000E+01   16  .1000E+01
   17  .0000E+00   18  .0000E+00   19  .0000E+00   20  .0000E+00   21  .0000E+00
22  .0000E+00   23  .0000E+00   24  .0000E+00
                                                DAY OF WEEK = SATURDAY
    1  .0000E+00    2  .0000E+00    3  .0000E+00    4  .0000E+00    5  .0000E+00
6  .0000E+00    7  .0000E+00    8  .0000E+00
    9  .0000E+00   10  .0000E+00   11  .0000E+00   12  .0000E+00   13  .0000E+00
14  .0000E+00   15  .0000E+00   16  .0000E+00
   17  .0000E+00   18  .0000E+00   19  .0000E+00   20  .0000E+00   21  .0000E+00
22  .0000E+00   23  .0000E+00   24  .0000E+00
                                                DAY OF WEEK = SUNDAY
    1  .0000E+00    2  .0000E+00    3  .0000E+00    4  .0000E+00    5  .0000E+00
6  .0000E+00    7  .0000E+00    8  .0000E+00
    9  .0000E+00   10  .0000E+00   11  .0000E+00   12  .0000E+00   13  .0000E+00
14  .0000E+00   15  .0000E+00   16  .0000E+00
   17  .0000E+00   18  .0000E+00   19  .0000E+00   20  .0000E+00   21  .0000E+00
22  .0000E+00   23  .0000E+00   24  .0000E+00
```

```
 *** AERMOD - VERSION 22112  ***   *** C:\Lakes\Project Files\Garvey\Garvey.isc
***        03/04/24
 *** AERMET - VERSION  16216 ***   ***
***        13:00:54

PAGE 318
 *** MODELOPTs:    RegDFAULT  CONC  ELEV  URBAN  ADJ_U*

                   * SOURCE EMISSION RATE SCALARS WHICH VARY DIURNALLY AND BY DAY
OF WEEK (HRDOW) *

 SOURCE ID = L0003718     ; SOURCE TYPE = VOLUME   :
  HOUR   SCALAR   HOUR   SCALAR   HOUR   SCALAR   HOUR   SCALAR   HOUR   SCALAR
HOUR   SCALAR   HOUR   SCALAR   HOUR   SCALAR
 - - - - - - - - - - - - - - - - - - - - - - - - - - - - - - - - - - - - - - - -
- - - - - - - - - - - - - - - - - - - - - - - - -
                                                DAY OF WEEK = WEEKDAY
    1  .0000E+00    2  .0000E+00    3  .0000E+00    4  .0000E+00    5  .0000E+00
6  .0000E+00    7  .1000E+01    8  .1000E+01
    9  .1000E+01   10  .1000E+01   11  .1000E+01   12  .1000E+01   13  .1000E+01
14  .1000E+01   15  .1000E+01   16  .1000E+01
   17  .0000E+00   18  .0000E+00   19  .0000E+00   20  .0000E+00   21  .0000E+00
22  .0000E+00   23  .0000E+00   24  .0000E+00
                                                DAY OF WEEK = SATURDAY
    1  .0000E+00    2  .0000E+00    3  .0000E+00    4  .0000E+00    5  .0000E+00
6  .0000E+00    7  .0000E+00    8  .0000E+00
    9  .0000E+00   10  .0000E+00   11  .0000E+00   12  .0000E+00   13  .0000E+00
14  .0000E+00   15  .0000E+00   16  .0000E+00
   17  .0000E+00   18  .0000E+00   19  .0000E+00   20  .0000E+00   21  .0000E+00
22  .0000E+00   23  .0000E+00   24  .0000E+00
                                                DAY OF WEEK = SUNDAY
    1  .0000E+00    2  .0000E+00    3  .0000E+00    4  .0000E+00    5  .0000E+00
6  .0000E+00    7  .0000E+00    8  .0000E+00
    9  .0000E+00   10  .0000E+00   11  .0000E+00   12  .0000E+00   13  .0000E+00
14  .0000E+00   15  .0000E+00   16  .0000E+00
   17  .0000E+00   18  .0000E+00   19  .0000E+00   20  .0000E+00   21  .0000E+00
22  .0000E+00   23  .0000E+00   24  .0000E+00
```

```
 *** AERMOD - VERSION 22112  ***   *** C:\Lakes\Project Files\Garvey\Garvey.isc
***        03/04/24
 *** AERMET - VERSION  16216 ***   ***
***        13:00:54

PAGE 319
 *** MODELOPTs:    RegDFAULT  CONC  ELEV  URBAN  ADJ_U*

                   * SOURCE EMISSION RATE SCALARS WHICH VARY DIURNALLY AND BY DAY
OF WEEK (HRDOW) *

 SOURCE ID = L0003719     ; SOURCE TYPE = VOLUME   :
  HOUR   SCALAR   HOUR   SCALAR   HOUR   SCALAR   HOUR   SCALAR   HOUR   SCALAR
HOUR   SCALAR   HOUR   SCALAR   HOUR   SCALAR
 - - - - - - - - - - - - - - - - - - - - - - - - - - - - - - - - - - - - - - - -
- - - - - - - - - - - - - - - - - - - - - - - - -
                                                DAY OF WEEK = WEEKDAY
    1  .0000E+00    2  .0000E+00    3  .0000E+00    4  .0000E+00    5  .0000E+00
6  .0000E+00    7  .1000E+01    8  .1000E+01
    9  .1000E+01   10  .1000E+01   11  .1000E+01   12  .1000E+01   13  .1000E+01
14  .1000E+01   15  .1000E+01   16  .1000E+01
   17  .0000E+00   18  .0000E+00   19  .0000E+00   20  .0000E+00   21  .0000E+00
22  .0000E+00   23  .0000E+00   24  .0000E+00
                                                DAY OF WEEK = SATURDAY
    1  .0000E+00    2  .0000E+00    3  .0000E+00    4  .0000E+00    5  .0000E+00
6  .0000E+00    7  .0000E+00    8  .0000E+00
    9  .0000E+00   10  .0000E+00   11  .0000E+00   12  .0000E+00   13  .0000E+00
14  .0000E+00   15  .0000E+00   16  .0000E+00
   17  .0000E+00   18  .0000E+00   19  .0000E+00   20  .0000E+00   21  .0000E+00
22  .0000E+00   23  .0000E+00   24  .0000E+00
                                                DAY OF WEEK = SUNDAY
    1  .0000E+00    2  .0000E+00    3  .0000E+00    4  .0000E+00    5  .0000E+00
6  .0000E+00    7  .0000E+00    8  .0000E+00
    9  .0000E+00   10  .0000E+00   11  .0000E+00   12  .0000E+00   13  .0000E+00
14  .0000E+00   15  .0000E+00   16  .0000E+00
   17  .0000E+00   18  .0000E+00   19  .0000E+00   20  .0000E+00   21  .0000E+00
22  .0000E+00   23  .0000E+00   24  .0000E+00
```

*** MODELOPTs: RegDFAULT CONC ELEV URBAN ADJ_U*

* SOURCE EMISSION RATE SCALARS WHICH VARY DIURNALLY AND BY DAY OF WEEK (HRDOW) *

SOURCE ID = L0003720 ; SOURCE TYPE = VOLUME :

HOUR	SCALAR	HOUR	SCALAR	HOUR	SCALAR	HOUR	SCALAR	HOUR	SCALAR	HOUR	SCALAR	HOUR	SCALAR	HOUR	SCALAR

DAY OF WEEK = WEEKDAY

1	.0000E+00	2	.0000E+00	3	.0000E+00	4	.0000E+00	5	.0000E+00	6	.0000E+00	7	.1000E+01	8	.1000E+01
9	.1000E+01	10	.1000E+01	11	.1000E+01	12	.1000E+01	13	.1000E+01	14	.1000E+01	15	.1000E+01	16	.1000E+01
17	.0000E+00	18	.0000E+00	19	.0000E+00	20	.0000E+00	21	.0000E+00	22	.0000E+00	23	.0000E+00	24	.0000E+00

DAY OF WEEK = SATURDAY

1	.0000E+00	2	.0000E+00	3	.0000E+00	4	.0000E+00	5	.0000E+00	6	.0000E+00	7	.0000E+00	8	.0000E+00
9	.0000E+00	10	.0000E+00	11	.0000E+00	12	.0000E+00	13	.0000E+00	14	.0000E+00	15	.0000E+00	16	.0000E+00
17	.0000E+00	18	.0000E+00	19	.0000E+00	20	.0000E+00	21	.0000E+00	22	.0000E+00	23	.0000E+00	24	.0000E+00

DAY OF WEEK = SUNDAY

1	.0000E+00	2	.0000E+00	3	.0000E+00	4	.0000E+00	5	.0000E+00	6	.0000E+00	7	.0000E+00	8	.0000E+00
9	.0000E+00	10	.0000E+00	11	.0000E+00	12	.0000E+00	13	.0000E+00	14	.0000E+00	15	.0000E+00	16	.0000E+00
17	.0000E+00	18	.0000E+00	19	.0000E+00	20	.0000E+00	21	.0000E+00	22	.0000E+00	23	.0000E+00	24	.0000E+00

*** MODELOPTs: RegDFAULT CONC ELEV URBAN ADJ_U*

* SOURCE EMISSION RATE SCALARS WHICH VARY DIURNALLY AND BY DAY OF WEEK (HRDOW) *

SOURCE ID = L0003721 ; SOURCE TYPE = VOLUME :

HOUR	SCALAR	HOUR	SCALAR	HOUR	SCALAR	HOUR	SCALAR	HOUR	SCALAR	HOUR	SCALAR	HOUR	SCALAR	HOUR	SCALAR

DAY OF WEEK = WEEKDAY

1	.0000E+00	2	.0000E+00	3	.0000E+00	4	.0000E+00	5	.0000E+00	6	.0000E+00	7	.1000E+01	8	.1000E+01
9	.1000E+01	10	.1000E+01	11	.1000E+01	12	.1000E+01	13	.1000E+01	14	.1000E+01	15	.1000E+01	16	.1000E+01
17	.0000E+00	18	.0000E+00	19	.0000E+00	20	.0000E+00	21	.0000E+00	22	.0000E+00	23	.0000E+00	24	.0000E+00

DAY OF WEEK = SATURDAY

1	.0000E+00	2	.0000E+00	3	.0000E+00	4	.0000E+00	5	.0000E+00	6	.0000E+00	7	.0000E+00	8	.0000E+00
9	.0000E+00	10	.0000E+00	11	.0000E+00	12	.0000E+00	13	.0000E+00	14	.0000E+00	15	.0000E+00	16	.0000E+00
17	.0000E+00	18	.0000E+00	19	.0000E+00	20	.0000E+00	21	.0000E+00	22	.0000E+00	23	.0000E+00	24	.0000E+00

DAY OF WEEK = SUNDAY

1	.0000E+00	2	.0000E+00	3	.0000E+00	4	.0000E+00	5	.0000E+00	6	.0000E+00	7	.0000E+00	8	.0000E+00
9	.0000E+00	10	.0000E+00	11	.0000E+00	12	.0000E+00	13	.0000E+00	14	.0000E+00	15	.0000E+00	16	.0000E+00
17	.0000E+00	18	.0000E+00	19	.0000E+00	20	.0000E+00	21	.0000E+00	22	.0000E+00	23	.0000E+00	24	.0000E+00

```
 *** AERMOD - VERSION 22112  ***   *** C:\Lakes\Project Files\Garvey\Garvey.isc
***        03/04/24
 *** AERMET - VERSION  16216 ***   ***
***        13:00:54

PAGE 322
 *** MODELOPTs:    RegDFAULT  CONC  ELEV  URBAN  ADJ_U*

                   * SOURCE EMISSION RATE SCALARS WHICH VARY DIURNALLY AND BY DAY
OF WEEK (HRDOW) *

 SOURCE ID = L0003722     ; SOURCE TYPE = VOLUME   :
  HOUR   SCALAR   HOUR   SCALAR   HOUR   SCALAR   HOUR   SCALAR   HOUR   SCALAR
HOUR   SCALAR   HOUR   SCALAR   HOUR   SCALAR
 - - - - - - - - - - - - - - - - - - - - - - - - - - - - - - - - - - - - - - - -
- - - - - - - - - - - - - - - - - - - - - - - - -
                                                DAY OF WEEK = WEEKDAY
    1  .0000E+00    2  .0000E+00    3  .0000E+00    4  .0000E+00    5  .0000E+00
6  .0000E+00    7  .1000E+01    8  .1000E+01
    9  .1000E+01   10  .1000E+01   11  .1000E+01   12  .1000E+01   13  .1000E+01
14  .1000E+01   15  .1000E+01   16  .1000E+01
   17  .0000E+00   18  .0000E+00   19  .0000E+00   20  .0000E+00   21  .0000E+00
22  .0000E+00   23  .0000E+00   24  .0000E+00
                                                DAY OF WEEK = SATURDAY
    1  .0000E+00    2  .0000E+00    3  .0000E+00    4  .0000E+00    5  .0000E+00
6  .0000E+00    7  .0000E+00    8  .0000E+00
    9  .0000E+00   10  .0000E+00   11  .0000E+00   12  .0000E+00   13  .0000E+00
14  .0000E+00   15  .0000E+00   16  .0000E+00
   17  .0000E+00   18  .0000E+00   19  .0000E+00   20  .0000E+00   21  .0000E+00
22  .0000E+00   23  .0000E+00   24  .0000E+00
                                                DAY OF WEEK = SUNDAY
    1  .0000E+00    2  .0000E+00    3  .0000E+00    4  .0000E+00    5  .0000E+00
6  .0000E+00    7  .0000E+00    8  .0000E+00
    9  .0000E+00   10  .0000E+00   11  .0000E+00   12  .0000E+00   13  .0000E+00
14  .0000E+00   15  .0000E+00   16  .0000E+00
   17  .0000E+00   18  .0000E+00   19  .0000E+00   20  .0000E+00   21  .0000E+00
22  .0000E+00   23  .0000E+00   24  .0000E+00
```

```
 *** AERMOD - VERSION 22112  ***   *** C:\Lakes\Project Files\Garvey\Garvey.isc
***        03/04/24
 *** AERMET - VERSION  16216 ***   ***
***        13:00:54

PAGE 323
 *** MODELOPTs:    RegDFAULT  CONC  ELEV  URBAN  ADJ_U*

                   * SOURCE EMISSION RATE SCALARS WHICH VARY DIURNALLY AND BY DAY
OF WEEK (HRDOW) *

 SOURCE ID = L0003723     ; SOURCE TYPE = VOLUME   :
  HOUR   SCALAR   HOUR   SCALAR   HOUR   SCALAR   HOUR   SCALAR   HOUR   SCALAR
HOUR   SCALAR   HOUR   SCALAR   HOUR   SCALAR
 - - - - - - - - - - - - - - - - - - - - - - - - - - - - - - - - - - - - - - - -
- - - - - - - - - - - - - - - - - - - - - - - - -
                                                DAY OF WEEK = WEEKDAY
    1  .0000E+00    2  .0000E+00    3  .0000E+00    4  .0000E+00    5  .0000E+00
6  .0000E+00    7  .1000E+01    8  .1000E+01
    9  .1000E+01   10  .1000E+01   11  .1000E+01   12  .1000E+01   13  .1000E+01
14  .1000E+01   15  .1000E+01   16  .1000E+01
   17  .0000E+00   18  .0000E+00   19  .0000E+00   20  .0000E+00   21  .0000E+00
22  .0000E+00   23  .0000E+00   24  .0000E+00
                                                DAY OF WEEK = SATURDAY
    1  .0000E+00    2  .0000E+00    3  .0000E+00    4  .0000E+00    5  .0000E+00
6  .0000E+00    7  .0000E+00    8  .0000E+00
    9  .0000E+00   10  .0000E+00   11  .0000E+00   12  .0000E+00   13  .0000E+00
14  .0000E+00   15  .0000E+00   16  .0000E+00
   17  .0000E+00   18  .0000E+00   19  .0000E+00   20  .0000E+00   21  .0000E+00
22  .0000E+00   23  .0000E+00   24  .0000E+00
                                                DAY OF WEEK = SUNDAY
    1  .0000E+00    2  .0000E+00    3  .0000E+00    4  .0000E+00    5  .0000E+00
6  .0000E+00    7  .0000E+00    8  .0000E+00
    9  .0000E+00   10  .0000E+00   11  .0000E+00   12  .0000E+00   13  .0000E+00
14  .0000E+00   15  .0000E+00   16  .0000E+00
   17  .0000E+00   18  .0000E+00   19  .0000E+00   20  .0000E+00   21  .0000E+00
22  .0000E+00   23  .0000E+00   24  .0000E+00
```

```
 *** AERMOD - VERSION 22112  ***   *** C:\Lakes\Project Files\Garvey\Garvey.isc
***        03/04/24
 *** AERMET - VERSION  16216 ***   ***
***        13:00:54

PAGE 324
 *** MODELOPTs:    RegDFAULT  CONC  ELEV  URBAN  ADJ_U*

                   * SOURCE EMISSION RATE SCALARS WHICH VARY DIURNALLY AND BY DAY
OF WEEK (HRDOW) *

 SOURCE ID = L0003724     ; SOURCE TYPE = VOLUME   :
  HOUR   SCALAR   HOUR   SCALAR   HOUR   SCALAR   HOUR   SCALAR   HOUR   SCALAR
HOUR   SCALAR   HOUR   SCALAR   HOUR   SCALAR
 - - - - - - - - - - - - - - - - - - - - - - - - - - - - - - - - - - - - - - - -
- - - - - - - - - - - - - - - - - - - - - - - - -
                                                DAY OF WEEK = WEEKDAY
    1  .0000E+00    2  .0000E+00    3  .0000E+00    4  .0000E+00    5  .0000E+00
6  .0000E+00    7  .1000E+01    8  .1000E+01
    9  .1000E+01   10  .1000E+01   11  .1000E+01   12  .1000E+01   13  .1000E+01
14  .1000E+01   15  .1000E+01   16  .1000E+01
   17  .0000E+00   18  .0000E+00   19  .0000E+00   20  .0000E+00   21  .0000E+00
22  .0000E+00   23  .0000E+00   24  .0000E+00
                                                DAY OF WEEK = SATURDAY
    1  .0000E+00    2  .0000E+00    3  .0000E+00    4  .0000E+00    5  .0000E+00
6  .0000E+00    7  .0000E+00    8  .0000E+00
    9  .0000E+00   10  .0000E+00   11  .0000E+00   12  .0000E+00   13  .0000E+00
14  .0000E+00   15  .0000E+00   16  .0000E+00
   17  .0000E+00   18  .0000E+00   19  .0000E+00   20  .0000E+00   21  .0000E+00
22  .0000E+00   23  .0000E+00   24  .0000E+00
                                                DAY OF WEEK = SUNDAY
    1  .0000E+00    2  .0000E+00    3  .0000E+00    4  .0000E+00    5  .0000E+00
6  .0000E+00    7  .0000E+00    8  .0000E+00
    9  .0000E+00   10  .0000E+00   11  .0000E+00   12  .0000E+00   13  .0000E+00
14  .0000E+00   15  .0000E+00   16  .0000E+00
   17  .0000E+00   18  .0000E+00   19  .0000E+00   20  .0000E+00   21  .0000E+00
22  .0000E+00   23  .0000E+00   24  .0000E+00
```

```
 *** AERMOD - VERSION 22112  ***   *** C:\Lakes\Project Files\Garvey\Garvey.isc
***        03/04/24
 *** AERMET - VERSION  16216 ***   ***
***        13:00:54

PAGE 325
 *** MODELOPTs:    RegDFAULT  CONC  ELEV  URBAN  ADJ_U*

                   * SOURCE EMISSION RATE SCALARS WHICH VARY DIURNALLY AND BY DAY
OF WEEK (HRDOW) *

 SOURCE ID = L0003725     ; SOURCE TYPE = VOLUME   :
  HOUR   SCALAR   HOUR   SCALAR   HOUR   SCALAR   HOUR   SCALAR   HOUR   SCALAR
HOUR   SCALAR   HOUR   SCALAR   HOUR   SCALAR
 - - - - - - - - - - - - - - - - - - - - - - - - - - - - - - - - - - - - - - - -
- - - - - - - - - - - - - - - - - - - - - - - - -
                                                DAY OF WEEK = WEEKDAY
    1  .0000E+00    2  .0000E+00    3  .0000E+00    4  .0000E+00    5  .0000E+00
6  .0000E+00    7  .1000E+01    8  .1000E+01
    9  .1000E+01   10  .1000E+01   11  .1000E+01   12  .1000E+01   13  .1000E+01
14  .1000E+01   15  .1000E+01   16  .1000E+01
   17  .0000E+00   18  .0000E+00   19  .0000E+00   20  .0000E+00   21  .0000E+00
22  .0000E+00   23  .0000E+00   24  .0000E+00
                                                DAY OF WEEK = SATURDAY
    1  .0000E+00    2  .0000E+00    3  .0000E+00    4  .0000E+00    5  .0000E+00
6  .0000E+00    7  .0000E+00    8  .0000E+00
    9  .0000E+00   10  .0000E+00   11  .0000E+00   12  .0000E+00   13  .0000E+00
14  .0000E+00   15  .0000E+00   16  .0000E+00
   17  .0000E+00   18  .0000E+00   19  .0000E+00   20  .0000E+00   21  .0000E+00
22  .0000E+00   23  .0000E+00   24  .0000E+00
                                                DAY OF WEEK = SUNDAY
    1  .0000E+00    2  .0000E+00    3  .0000E+00    4  .0000E+00    5  .0000E+00
6  .0000E+00    7  .0000E+00    8  .0000E+00
    9  .0000E+00   10  .0000E+00   11  .0000E+00   12  .0000E+00   13  .0000E+00
14  .0000E+00   15  .0000E+00   16  .0000E+00
   17  .0000E+00   18  .0000E+00   19  .0000E+00   20  .0000E+00   21  .0000E+00
22  .0000E+00   23  .0000E+00   24  .0000E+00
```

```
 *** AERMOD - VERSION 22112  ***   *** C:\Lakes\Project Files\Garvey\Garvey.isc
***        03/04/24
 *** AERMET - VERSION  16216 ***   ***
***        13:00:54

PAGE 326
 *** MODELOPTs:    RegDFAULT  CONC  ELEV  URBAN  ADJ_U*

                   * SOURCE EMISSION RATE SCALARS WHICH VARY DIURNALLY AND BY DAY
OF WEEK (HRDOW) *

 SOURCE ID = L0003726     ; SOURCE TYPE = VOLUME   :
  HOUR   SCALAR   HOUR   SCALAR   HOUR   SCALAR   HOUR   SCALAR   HOUR   SCALAR
HOUR   SCALAR   HOUR   SCALAR   HOUR   SCALAR
 - - - - - - - - - - - - - - - - - - - - - - - - - - - - - - - - - - - - - - - -
- - - - - - - - - - - - - - - - - - - - - - - - -
                                                DAY OF WEEK = WEEKDAY
    1  .0000E+00    2  .0000E+00    3  .0000E+00    4  .0000E+00    5  .0000E+00
6  .0000E+00    7  .1000E+01    8  .1000E+01
    9  .1000E+01   10  .1000E+01   11  .1000E+01   12  .1000E+01   13  .1000E+01
14  .1000E+01   15  .1000E+01   16  .1000E+01
   17  .0000E+00   18  .0000E+00   19  .0000E+00   20  .0000E+00   21  .0000E+00
22  .0000E+00   23  .0000E+00   24  .0000E+00
                                                DAY OF WEEK = SATURDAY
    1  .0000E+00    2  .0000E+00    3  .0000E+00    4  .0000E+00    5  .0000E+00
6  .0000E+00    7  .0000E+00    8  .0000E+00
    9  .0000E+00   10  .0000E+00   11  .0000E+00   12  .0000E+00   13  .0000E+00
14  .0000E+00   15  .0000E+00   16  .0000E+00
   17  .0000E+00   18  .0000E+00   19  .0000E+00   20  .0000E+00   21  .0000E+00
22  .0000E+00   23  .0000E+00   24  .0000E+00
                                                DAY OF WEEK = SUNDAY
    1  .0000E+00    2  .0000E+00    3  .0000E+00    4  .0000E+00    5  .0000E+00
6  .0000E+00    7  .0000E+00    8  .0000E+00
    9  .0000E+00   10  .0000E+00   11  .0000E+00   12  .0000E+00   13  .0000E+00
14  .0000E+00   15  .0000E+00   16  .0000E+00
   17  .0000E+00   18  .0000E+00   19  .0000E+00   20  .0000E+00   21  .0000E+00
22  .0000E+00   23  .0000E+00   24  .0000E+00
```

```
 *** AERMOD - VERSION 22112  ***   *** C:\Lakes\Project Files\Garvey\Garvey.isc
***        03/04/24
 *** AERMET - VERSION  16216 ***   ***
***        13:00:54

PAGE 327
 *** MODELOPTs:    RegDFAULT  CONC  ELEV  URBAN  ADJ_U*

                   * SOURCE EMISSION RATE SCALARS WHICH VARY DIURNALLY AND BY DAY
OF WEEK (HRDOW) *

 SOURCE ID = L0003727     ; SOURCE TYPE = VOLUME   :
  HOUR   SCALAR   HOUR   SCALAR   HOUR   SCALAR   HOUR   SCALAR   HOUR   SCALAR
HOUR   SCALAR   HOUR   SCALAR   HOUR   SCALAR
 - - - - - - - - - - - - - - - - - - - - - - - - - - - - - - - - - - - - - - - -
- - - - - - - - - - - - - - - - - - - - - - - - -
                                                DAY OF WEEK = WEEKDAY
    1  .0000E+00    2  .0000E+00    3  .0000E+00    4  .0000E+00    5  .0000E+00
6  .0000E+00    7  .1000E+01    8  .1000E+01
    9  .1000E+01   10  .1000E+01   11  .1000E+01   12  .1000E+01   13  .1000E+01
14  .1000E+01   15  .1000E+01   16  .1000E+01
   17  .0000E+00   18  .0000E+00   19  .0000E+00   20  .0000E+00   21  .0000E+00
22  .0000E+00   23  .0000E+00   24  .0000E+00
                                                DAY OF WEEK = SATURDAY
    1  .0000E+00    2  .0000E+00    3  .0000E+00    4  .0000E+00    5  .0000E+00
6  .0000E+00    7  .0000E+00    8  .0000E+00
    9  .0000E+00   10  .0000E+00   11  .0000E+00   12  .0000E+00   13  .0000E+00
14  .0000E+00   15  .0000E+00   16  .0000E+00
   17  .0000E+00   18  .0000E+00   19  .0000E+00   20  .0000E+00   21  .0000E+00
22  .0000E+00   23  .0000E+00   24  .0000E+00
                                                DAY OF WEEK = SUNDAY
    1  .0000E+00    2  .0000E+00    3  .0000E+00    4  .0000E+00    5  .0000E+00
6  .0000E+00    7  .0000E+00    8  .0000E+00
    9  .0000E+00   10  .0000E+00   11  .0000E+00   12  .0000E+00   13  .0000E+00
14  .0000E+00   15  .0000E+00   16  .0000E+00
   17  .0000E+00   18  .0000E+00   19  .0000E+00   20  .0000E+00   21  .0000E+00
22  .0000E+00   23  .0000E+00   24  .0000E+00
```

```
 *** AERMOD - VERSION 22112  ***   *** C:\Lakes\Project Files\Garvey\Garvey.isc
***        03/04/24
 *** AERMET - VERSION  16216 ***   ***
***        13:00:54

PAGE 328
 *** MODELOPTs:    RegDFAULT  CONC  ELEV  URBAN  ADJ_U*

                   * SOURCE EMISSION RATE SCALARS WHICH VARY DIURNALLY AND BY DAY
OF WEEK (HRDOW) *

 SOURCE ID = L0003728     ; SOURCE TYPE = VOLUME   :
  HOUR   SCALAR   HOUR   SCALAR   HOUR   SCALAR   HOUR   SCALAR   HOUR   SCALAR
HOUR   SCALAR   HOUR   SCALAR   HOUR   SCALAR
 - - - - - - - - - - - - - - - - - - - - - - - - - - - - - - - - - - - - - - - -
- - - - - - - - - - - - - - - - - - - - - - - - - -
                                                DAY OF WEEK = WEEKDAY
    1  .0000E+00    2  .0000E+00    3  .0000E+00    4  .0000E+00    5  .0000E+00
6  .0000E+00    7  .1000E+01    8  .1000E+01
    9  .1000E+01   10  .1000E+01   11  .1000E+01   12  .1000E+01   13  .1000E+01
14  .1000E+01   15  .1000E+01   16  .1000E+01
   17  .0000E+00   18  .0000E+00   19  .0000E+00   20  .0000E+00   21  .0000E+00
22  .0000E+00   23  .0000E+00   24  .0000E+00
                                                DAY OF WEEK = SATURDAY
    1  .0000E+00    2  .0000E+00    3  .0000E+00    4  .0000E+00    5  .0000E+00
6  .0000E+00    7  .0000E+00    8  .0000E+00
    9  .0000E+00   10  .0000E+00   11  .0000E+00   12  .0000E+00   13  .0000E+00
14  .0000E+00   15  .0000E+00   16  .0000E+00
   17  .0000E+00   18  .0000E+00   19  .0000E+00   20  .0000E+00   21  .0000E+00
22  .0000E+00   23  .0000E+00   24  .0000E+00
                                                DAY OF WEEK = SUNDAY
    1  .0000E+00    2  .0000E+00    3  .0000E+00    4  .0000E+00    5  .0000E+00
6  .0000E+00    7  .0000E+00    8  .0000E+00
    9  .0000E+00   10  .0000E+00   11  .0000E+00   12  .0000E+00   13  .0000E+00
14  .0000E+00   15  .0000E+00   16  .0000E+00
   17  .0000E+00   18  .0000E+00   19  .0000E+00   20  .0000E+00   21  .0000E+00
22  .0000E+00   23  .0000E+00   24  .0000E+00
```

*** MODELOPTs: RegDFAULT CONC ELEV URBAN ADJ_U*

* SOURCE EMISSION RATE SCALARS WHICH VARY DIURNALLY AND BY DAY OF WEEK (HRDOW) *

SOURCE ID = L0003729 ; SOURCE TYPE = VOLUME :

HOUR	SCALAR	HOUR	SCALAR	HOUR	SCALAR	HOUR	SCALAR	HOUR	SCALAR	HOUR	SCALAR	HOUR	SCALAR	HOUR	SCALAR

DAY OF WEEK = WEEKDAY

1	.0000E+00	2	.0000E+00	3	.0000E+00	4	.0000E+00	5	.0000E+00	6	.0000E+00	7	.1000E+01	8	.1000E+01
9	.1000E+01	10	.1000E+01	11	.1000E+01	12	.1000E+01	13	.1000E+01	14	.1000E+01	15	.1000E+01	16	.1000E+01
17	.0000E+00	18	.0000E+00	19	.0000E+00	20	.0000E+00	21	.0000E+00	22	.0000E+00	23	.0000E+00	24	.0000E+00

DAY OF WEEK = SATURDAY

1	.0000E+00	2	.0000E+00	3	.0000E+00	4	.0000E+00	5	.0000E+00	6	.0000E+00	7	.0000E+00	8	.0000E+00
9	.0000E+00	10	.0000E+00	11	.0000E+00	12	.0000E+00	13	.0000E+00	14	.0000E+00	15	.0000E+00	16	.0000E+00
17	.0000E+00	18	.0000E+00	19	.0000E+00	20	.0000E+00	21	.0000E+00	22	.0000E+00	23	.0000E+00	24	.0000E+00

DAY OF WEEK = SUNDAY

1	.0000E+00	2	.0000E+00	3	.0000E+00	4	.0000E+00	5	.0000E+00	6	.0000E+00	7	.0000E+00	8	.0000E+00
9	.0000E+00	10	.0000E+00	11	.0000E+00	12	.0000E+00	13	.0000E+00	14	.0000E+00	15	.0000E+00	16	.0000E+00
17	.0000E+00	18	.0000E+00	19	.0000E+00	20	.0000E+00	21	.0000E+00	22	.0000E+00	23	.0000E+00	24	.0000E+00

```
 *** AERMOD - VERSION 22112  ***   *** C:\Lakes\Project Files\Garvey\Garvey.isc
***        03/04/24
 *** AERMET - VERSION  16216 ***   ***
***        13:00:54

PAGE 330
 *** MODELOPTs:    RegDFAULT  CONC  ELEV  URBAN  ADJ_U*

                   * SOURCE EMISSION RATE SCALARS WHICH VARY DIURNALLY AND BY DAY
OF WEEK (HRDOW) *

 SOURCE ID = L0003730     ; SOURCE TYPE = VOLUME   :
  HOUR   SCALAR   HOUR   SCALAR   HOUR   SCALAR   HOUR   SCALAR   HOUR   SCALAR
HOUR   SCALAR   HOUR   SCALAR   HOUR   SCALAR
 - - - - - - - - - - - - - - - - - - - - - - - - - - - - - - - - - - - - - - - -
- - - - - - - - - - - - - - - - - - - - - - - - -
                                                DAY OF WEEK = WEEKDAY
    1  .0000E+00    2  .0000E+00    3  .0000E+00    4  .0000E+00    5  .0000E+00
6  .0000E+00    7  .1000E+01    8  .1000E+01
    9  .1000E+01   10  .1000E+01   11  .1000E+01   12  .1000E+01   13  .1000E+01
14  .1000E+01   15  .1000E+01   16  .1000E+01
   17  .0000E+00   18  .0000E+00   19  .0000E+00   20  .0000E+00   21  .0000E+00
22  .0000E+00   23  .0000E+00   24  .0000E+00
                                                DAY OF WEEK = SATURDAY
    1  .0000E+00    2  .0000E+00    3  .0000E+00    4  .0000E+00    5  .0000E+00
6  .0000E+00    7  .0000E+00    8  .0000E+00
    9  .0000E+00   10  .0000E+00   11  .0000E+00   12  .0000E+00   13  .0000E+00
14  .0000E+00   15  .0000E+00   16  .0000E+00
   17  .0000E+00   18  .0000E+00   19  .0000E+00   20  .0000E+00   21  .0000E+00
22  .0000E+00   23  .0000E+00   24  .0000E+00
                                                DAY OF WEEK = SUNDAY
    1  .0000E+00    2  .0000E+00    3  .0000E+00    4  .0000E+00    5  .0000E+00
6  .0000E+00    7  .0000E+00    8  .0000E+00
    9  .0000E+00   10  .0000E+00   11  .0000E+00   12  .0000E+00   13  .0000E+00
14  .0000E+00   15  .0000E+00   16  .0000E+00
   17  .0000E+00   18  .0000E+00   19  .0000E+00   20  .0000E+00   21  .0000E+00
22  .0000E+00   23  .0000E+00   24  .0000E+00
```

```
 *** AERMOD - VERSION 22112  ***   *** C:\Lakes\Project Files\Garvey\Garvey.isc
***        03/04/24
 *** AERMET - VERSION  16216 ***   ***
***        13:00:54

PAGE 331
 *** MODELOPTs:    RegDFAULT  CONC  ELEV  URBAN  ADJ_U*

                   * SOURCE EMISSION RATE SCALARS WHICH VARY DIURNALLY AND BY DAY
OF WEEK (HRDOW) *

 SOURCE ID = L0003731     ; SOURCE TYPE = VOLUME   :
  HOUR   SCALAR   HOUR   SCALAR   HOUR   SCALAR   HOUR   SCALAR   HOUR   SCALAR
HOUR   SCALAR   HOUR   SCALAR   HOUR   SCALAR
 - - - - - - - - - - - - - - - - - - - - - - - - - - - - - - - - - - - - - - - -
- - - - - - - - - - - - - - - - - - - - - - - - -
                                                DAY OF WEEK = WEEKDAY
    1  .0000E+00    2  .0000E+00    3  .0000E+00    4  .0000E+00    5  .0000E+00
6  .0000E+00    7  .1000E+01    8  .1000E+01
    9  .1000E+01   10  .1000E+01   11  .1000E+01   12  .1000E+01   13  .1000E+01
14  .1000E+01   15  .1000E+01   16  .1000E+01
   17  .0000E+00   18  .0000E+00   19  .0000E+00   20  .0000E+00   21  .0000E+00
22  .0000E+00   23  .0000E+00   24  .0000E+00
                                                DAY OF WEEK = SATURDAY
    1  .0000E+00    2  .0000E+00    3  .0000E+00    4  .0000E+00    5  .0000E+00
6  .0000E+00    7  .0000E+00    8  .0000E+00
    9  .0000E+00   10  .0000E+00   11  .0000E+00   12  .0000E+00   13  .0000E+00
14  .0000E+00   15  .0000E+00   16  .0000E+00
   17  .0000E+00   18  .0000E+00   19  .0000E+00   20  .0000E+00   21  .0000E+00
22  .0000E+00   23  .0000E+00   24  .0000E+00
                                                DAY OF WEEK = SUNDAY
    1  .0000E+00    2  .0000E+00    3  .0000E+00    4  .0000E+00    5  .0000E+00
6  .0000E+00    7  .0000E+00    8  .0000E+00
    9  .0000E+00   10  .0000E+00   11  .0000E+00   12  .0000E+00   13  .0000E+00
14  .0000E+00   15  .0000E+00   16  .0000E+00
   17  .0000E+00   18  .0000E+00   19  .0000E+00   20  .0000E+00   21  .0000E+00
22  .0000E+00   23  .0000E+00   24  .0000E+00
```

*** MODELOPTs: RegDFAULT CONC ELEV URBAN ADJ_U*

* SOURCE EMISSION RATE SCALARS WHICH VARY DIURNALLY AND BY DAY OF WEEK (HRDOW) *

SOURCE ID = L0003732 ; SOURCE TYPE = VOLUME :

HOUR	SCALAR	HOUR	SCALAR	HOUR	SCALAR	HOUR	SCALAR	HOUR	SCALAR	HOUR	SCALAR	HOUR	SCALAR	HOUR	SCALAR

DAY OF WEEK = WEEKDAY

1	.0000E+00	2	.0000E+00	3	.0000E+00	4	.0000E+00	5	.0000E+00	6	.0000E+00	7	.1000E+01	8	.1000E+01
9	.1000E+01	10	.1000E+01	11	.1000E+01	12	.1000E+01	13	.1000E+01	14	.1000E+01	15	.1000E+01	16	.1000E+01
17	.0000E+00	18	.0000E+00	19	.0000E+00	20	.0000E+00	21	.0000E+00	22	.0000E+00	23	.0000E+00	24	.0000E+00

DAY OF WEEK = SATURDAY

1	.0000E+00	2	.0000E+00	3	.0000E+00	4	.0000E+00	5	.0000E+00	6	.0000E+00	7	.0000E+00	8	.0000E+00
9	.0000E+00	10	.0000E+00	11	.0000E+00	12	.0000E+00	13	.0000E+00	14	.0000E+00	15	.0000E+00	16	.0000E+00
17	.0000E+00	18	.0000E+00	19	.0000E+00	20	.0000E+00	21	.0000E+00	22	.0000E+00	23	.0000E+00	24	.0000E+00

DAY OF WEEK = SUNDAY

1	.0000E+00	2	.0000E+00	3	.0000E+00	4	.0000E+00	5	.0000E+00	6	.0000E+00	7	.0000E+00	8	.0000E+00
9	.0000E+00	10	.0000E+00	11	.0000E+00	12	.0000E+00	13	.0000E+00	14	.0000E+00	15	.0000E+00	16	.0000E+00
17	.0000E+00	18	.0000E+00	19	.0000E+00	20	.0000E+00	21	.0000E+00	22	.0000E+00	23	.0000E+00	24	.0000E+00

```
 *** AERMOD - VERSION 22112  ***   *** C:\Lakes\Project Files\Garvey\Garvey.isc
***        03/04/24
 *** AERMET - VERSION  16216 ***   ***
***        13:00:54

PAGE 333
 *** MODELOPTs:    RegDFAULT  CONC  ELEV  URBAN  ADJ_U*

                   * SOURCE EMISSION RATE SCALARS WHICH VARY DIURNALLY AND BY DAY
OF WEEK (HRDOW) *

 SOURCE ID = L0003733     ; SOURCE TYPE = VOLUME   :
  HOUR   SCALAR   HOUR   SCALAR   HOUR   SCALAR   HOUR   SCALAR   HOUR   SCALAR
HOUR   SCALAR   HOUR   SCALAR   HOUR   SCALAR
 - - - - - - - - - - - - - - - - - - - - - - - - - - - - - - - - - - - - - - - -
- - - - - - - - - - - - - - - - - - - - - - - - -
                                                DAY OF WEEK = WEEKDAY
    1  .0000E+00    2  .0000E+00    3  .0000E+00    4  .0000E+00    5  .0000E+00
6  .0000E+00    7  .1000E+01    8  .1000E+01
    9  .1000E+01   10  .1000E+01   11  .1000E+01   12  .1000E+01   13  .1000E+01
14  .1000E+01   15  .1000E+01   16  .1000E+01
   17  .0000E+00   18  .0000E+00   19  .0000E+00   20  .0000E+00   21  .0000E+00
22  .0000E+00   23  .0000E+00   24  .0000E+00
                                                DAY OF WEEK = SATURDAY
    1  .0000E+00    2  .0000E+00    3  .0000E+00    4  .0000E+00    5  .0000E+00
6  .0000E+00    7  .0000E+00    8  .0000E+00
    9  .0000E+00   10  .0000E+00   11  .0000E+00   12  .0000E+00   13  .0000E+00
14  .0000E+00   15  .0000E+00   16  .0000E+00
   17  .0000E+00   18  .0000E+00   19  .0000E+00   20  .0000E+00   21  .0000E+00
22  .0000E+00   23  .0000E+00   24  .0000E+00
                                                DAY OF WEEK = SUNDAY
    1  .0000E+00    2  .0000E+00    3  .0000E+00    4  .0000E+00    5  .0000E+00
6  .0000E+00    7  .0000E+00    8  .0000E+00
    9  .0000E+00   10  .0000E+00   11  .0000E+00   12  .0000E+00   13  .0000E+00
14  .0000E+00   15  .0000E+00   16  .0000E+00
   17  .0000E+00   18  .0000E+00   19  .0000E+00   20  .0000E+00   21  .0000E+00
22  .0000E+00   23  .0000E+00   24  .0000E+00
```

*** MODELOPTs: RegDFAULT CONC ELEV URBAN ADJ_U*

* SOURCE EMISSION RATE SCALARS WHICH VARY DIURNALLY AND BY DAY OF WEEK (HRDOW) *

SOURCE ID = L0003734 ; SOURCE TYPE = VOLUME :

HOUR	SCALAR	HOUR	SCALAR	HOUR	SCALAR	HOUR	SCALAR	HOUR	SCALAR	HOUR	SCALAR	HOUR	SCALAR	HOUR	SCALAR

DAY OF WEEK = WEEKDAY

1	.0000E+00	2	.0000E+00	3	.0000E+00	4	.0000E+00	5	.0000E+00	6	.0000E+00	7	.1000E+01	8	.1000E+01
9	.1000E+01	10	.1000E+01	11	.1000E+01	12	.1000E+01	13	.1000E+01	14	.1000E+01	15	.1000E+01	16	.1000E+01
17	.0000E+00	18	.0000E+00	19	.0000E+00	20	.0000E+00	21	.0000E+00	22	.0000E+00	23	.0000E+00	24	.0000E+00

DAY OF WEEK = SATURDAY

1	.0000E+00	2	.0000E+00	3	.0000E+00	4	.0000E+00	5	.0000E+00	6	.0000E+00	7	.0000E+00	8	.0000E+00
9	.0000E+00	10	.0000E+00	11	.0000E+00	12	.0000E+00	13	.0000E+00	14	.0000E+00	15	.0000E+00	16	.0000E+00
17	.0000E+00	18	.0000E+00	19	.0000E+00	20	.0000E+00	21	.0000E+00	22	.0000E+00	23	.0000E+00	24	.0000E+00

DAY OF WEEK = SUNDAY

1	.0000E+00	2	.0000E+00	3	.0000E+00	4	.0000E+00	5	.0000E+00	6	.0000E+00	7	.0000E+00	8	.0000E+00
9	.0000E+00	10	.0000E+00	11	.0000E+00	12	.0000E+00	13	.0000E+00	14	.0000E+00	15	.0000E+00	16	.0000E+00
17	.0000E+00	18	.0000E+00	19	.0000E+00	20	.0000E+00	21	.0000E+00	22	.0000E+00	23	.0000E+00	24	.0000E+00

*** MODELOPTs: RegDFAULT CONC ELEV URBAN ADJ_U*

* SOURCE EMISSION RATE SCALARS WHICH VARY DIURNALLY AND BY DAY OF WEEK (HRDOW) *

SOURCE ID = L0003735 ; SOURCE TYPE = VOLUME :

HOUR	SCALAR	HOUR	SCALAR	HOUR	SCALAR	HOUR	SCALAR	HOUR	SCALAR	HOUR	SCALAR	HOUR	SCALAR	HOUR	SCALAR

DAY OF WEEK = WEEKDAY

1	.0000E+00	2	.0000E+00	3	.0000E+00	4	.0000E+00	5	.0000E+00	6	.0000E+00	7	.1000E+01	8	.1000E+01
9	.1000E+01	10	.1000E+01	11	.1000E+01	12	.1000E+01	13	.1000E+01	14	.1000E+01	15	.1000E+01	16	.1000E+01
17	.0000E+00	18	.0000E+00	19	.0000E+00	20	.0000E+00	21	.0000E+00	22	.0000E+00	23	.0000E+00	24	.0000E+00

DAY OF WEEK = SATURDAY

1	.0000E+00	2	.0000E+00	3	.0000E+00	4	.0000E+00	5	.0000E+00	6	.0000E+00	7	.0000E+00	8	.0000E+00
9	.0000E+00	10	.0000E+00	11	.0000E+00	12	.0000E+00	13	.0000E+00	14	.0000E+00	15	.0000E+00	16	.0000E+00
17	.0000E+00	18	.0000E+00	19	.0000E+00	20	.0000E+00	21	.0000E+00	22	.0000E+00	23	.0000E+00	24	.0000E+00

DAY OF WEEK = SUNDAY

1	.0000E+00	2	.0000E+00	3	.0000E+00	4	.0000E+00	5	.0000E+00	6	.0000E+00	7	.0000E+00	8	.0000E+00
9	.0000E+00	10	.0000E+00	11	.0000E+00	12	.0000E+00	13	.0000E+00	14	.0000E+00	15	.0000E+00	16	.0000E+00
17	.0000E+00	18	.0000E+00	19	.0000E+00	20	.0000E+00	21	.0000E+00	22	.0000E+00	23	.0000E+00	24	.0000E+00

```
 *** AERMOD - VERSION 22112  ***   *** C:\Lakes\Project Files\Garvey\Garvey.isc
***        03/04/24
 *** AERMET - VERSION  16216 ***   ***
***        13:00:54

PAGE 336
 *** MODELOPTs:    RegDFAULT  CONC  ELEV  URBAN  ADJ_U*

                   * SOURCE EMISSION RATE SCALARS WHICH VARY DIURNALLY AND BY DAY
OF WEEK (HRDOW) *

 SOURCE ID = L0003736     ; SOURCE TYPE = VOLUME   :
  HOUR   SCALAR   HOUR   SCALAR   HOUR   SCALAR   HOUR   SCALAR   HOUR   SCALAR
HOUR   SCALAR   HOUR   SCALAR   HOUR   SCALAR
 - - - - - - - - - - - - - - - - - - - - - - - - - - - - - - - - - - - - - - - -
- - - - - - - - - - - - - - - - - - - - - - - - -
                                                DAY OF WEEK = WEEKDAY
    1  .0000E+00    2  .0000E+00    3  .0000E+00    4  .0000E+00    5  .0000E+00
6  .0000E+00    7  .1000E+01    8  .1000E+01
    9  .1000E+01   10  .1000E+01   11  .1000E+01   12  .1000E+01   13  .1000E+01
14  .1000E+01   15  .1000E+01   16  .1000E+01
   17  .0000E+00   18  .0000E+00   19  .0000E+00   20  .0000E+00   21  .0000E+00
22  .0000E+00   23  .0000E+00   24  .0000E+00
                                                DAY OF WEEK = SATURDAY
    1  .0000E+00    2  .0000E+00    3  .0000E+00    4  .0000E+00    5  .0000E+00
6  .0000E+00    7  .0000E+00    8  .0000E+00
    9  .0000E+00   10  .0000E+00   11  .0000E+00   12  .0000E+00   13  .0000E+00
14  .0000E+00   15  .0000E+00   16  .0000E+00
   17  .0000E+00   18  .0000E+00   19  .0000E+00   20  .0000E+00   21  .0000E+00
22  .0000E+00   23  .0000E+00   24  .0000E+00
                                                DAY OF WEEK = SUNDAY
    1  .0000E+00    2  .0000E+00    3  .0000E+00    4  .0000E+00    5  .0000E+00
6  .0000E+00    7  .0000E+00    8  .0000E+00
    9  .0000E+00   10  .0000E+00   11  .0000E+00   12  .0000E+00   13  .0000E+00
14  .0000E+00   15  .0000E+00   16  .0000E+00
   17  .0000E+00   18  .0000E+00   19  .0000E+00   20  .0000E+00   21  .0000E+00
22  .0000E+00   23  .0000E+00   24  .0000E+00
```

```
 *** AERMOD - VERSION 22112  ***   *** C:\Lakes\Project Files\Garvey\Garvey.isc
***        03/04/24
 *** AERMET - VERSION  16216 ***   ***
***        13:00:54

PAGE 337
 *** MODELOPTs:    RegDFAULT  CONC  ELEV  URBAN  ADJ_U*

                   * SOURCE EMISSION RATE SCALARS WHICH VARY DIURNALLY AND BY DAY
OF WEEK (HRDOW) *

 SOURCE ID = L0003737     ; SOURCE TYPE = VOLUME   :
  HOUR   SCALAR   HOUR   SCALAR   HOUR   SCALAR   HOUR   SCALAR   HOUR   SCALAR
HOUR   SCALAR   HOUR   SCALAR   HOUR   SCALAR
 - - - - - - - - - - - - - - - - - - - - - - - - - - - - - - - - - - - - - - - -
- - - - - - - - - - - - - - - - - - - - - - - - -
                                                DAY OF WEEK = WEEKDAY
    1  .0000E+00    2  .0000E+00    3  .0000E+00    4  .0000E+00    5  .0000E+00
6  .0000E+00    7  .1000E+01    8  .1000E+01
    9  .1000E+01   10  .1000E+01   11  .1000E+01   12  .1000E+01   13  .1000E+01
14  .1000E+01   15  .1000E+01   16  .1000E+01
   17  .0000E+00   18  .0000E+00   19  .0000E+00   20  .0000E+00   21  .0000E+00
22  .0000E+00   23  .0000E+00   24  .0000E+00
                                                DAY OF WEEK = SATURDAY
    1  .0000E+00    2  .0000E+00    3  .0000E+00    4  .0000E+00    5  .0000E+00
6  .0000E+00    7  .0000E+00    8  .0000E+00
    9  .0000E+00   10  .0000E+00   11  .0000E+00   12  .0000E+00   13  .0000E+00
14  .0000E+00   15  .0000E+00   16  .0000E+00
   17  .0000E+00   18  .0000E+00   19  .0000E+00   20  .0000E+00   21  .0000E+00
22  .0000E+00   23  .0000E+00   24  .0000E+00
                                                DAY OF WEEK = SUNDAY
    1  .0000E+00    2  .0000E+00    3  .0000E+00    4  .0000E+00    5  .0000E+00
6  .0000E+00    7  .0000E+00    8  .0000E+00
    9  .0000E+00   10  .0000E+00   11  .0000E+00   12  .0000E+00   13  .0000E+00
14  .0000E+00   15  .0000E+00   16  .0000E+00
   17  .0000E+00   18  .0000E+00   19  .0000E+00   20  .0000E+00   21  .0000E+00
22  .0000E+00   23  .0000E+00   24  .0000E+00
```

```
 *** AERMOD - VERSION 22112  ***   *** C:\Lakes\Project Files\Garvey\Garvey.isc
***        03/04/24
 *** AERMET - VERSION  16216 ***   ***
***        13:00:54

PAGE 338
 *** MODELOPTs:    RegDFAULT  CONC  ELEV  URBAN  ADJ_U*

                   * SOURCE EMISSION RATE SCALARS WHICH VARY DIURNALLY AND BY DAY
OF WEEK (HRDOW) *

 SOURCE ID = L0003738     ; SOURCE TYPE = VOLUME   :
  HOUR   SCALAR   HOUR   SCALAR   HOUR   SCALAR   HOUR   SCALAR   HOUR   SCALAR
HOUR   SCALAR   HOUR   SCALAR   HOUR   SCALAR
 - - - - - - - - - - - - - - - - - - - - - - - - - - - - - - - - - - - - - - - -
- - - - - - - - - - - - - - - - - - - - - - - - -
                                                DAY OF WEEK = WEEKDAY
    1  .0000E+00    2  .0000E+00    3  .0000E+00    4  .0000E+00    5  .0000E+00
6  .0000E+00    7  .1000E+01    8  .1000E+01
    9  .1000E+01   10  .1000E+01   11  .1000E+01   12  .1000E+01   13  .1000E+01
14  .1000E+01   15  .1000E+01   16  .1000E+01
   17  .0000E+00   18  .0000E+00   19  .0000E+00   20  .0000E+00   21  .0000E+00
22  .0000E+00   23  .0000E+00   24  .0000E+00
                                                DAY OF WEEK = SATURDAY
    1  .0000E+00    2  .0000E+00    3  .0000E+00    4  .0000E+00    5  .0000E+00
6  .0000E+00    7  .0000E+00    8  .0000E+00
    9  .0000E+00   10  .0000E+00   11  .0000E+00   12  .0000E+00   13  .0000E+00
14  .0000E+00   15  .0000E+00   16  .0000E+00
   17  .0000E+00   18  .0000E+00   19  .0000E+00   20  .0000E+00   21  .0000E+00
22  .0000E+00   23  .0000E+00   24  .0000E+00
                                                DAY OF WEEK = SUNDAY
    1  .0000E+00    2  .0000E+00    3  .0000E+00    4  .0000E+00    5  .0000E+00
6  .0000E+00    7  .0000E+00    8  .0000E+00
    9  .0000E+00   10  .0000E+00   11  .0000E+00   12  .0000E+00   13  .0000E+00
14  .0000E+00   15  .0000E+00   16  .0000E+00
   17  .0000E+00   18  .0000E+00   19  .0000E+00   20  .0000E+00   21  .0000E+00
22  .0000E+00   23  .0000E+00   24  .0000E+00
```

```
 *** AERMOD - VERSION 22112  ***   *** C:\Lakes\Project Files\Garvey\Garvey.isc
***        03/04/24
 *** AERMET - VERSION  16216 ***   ***
***        13:00:54

PAGE 339
 *** MODELOPTs:    RegDFAULT  CONC  ELEV  URBAN  ADJ_U*

                   * SOURCE EMISSION RATE SCALARS WHICH VARY DIURNALLY AND BY DAY
OF WEEK (HRDOW) *

 SOURCE ID = L0003739     ; SOURCE TYPE = VOLUME   :
  HOUR   SCALAR   HOUR   SCALAR   HOUR   SCALAR   HOUR   SCALAR   HOUR   SCALAR
HOUR   SCALAR   HOUR   SCALAR   HOUR   SCALAR
 - - - - - - - - - - - - - - - - - - - - - - - - - - - - - - - - - - - - - - - -
- - - - - - - - - - - - - - - - - - - - - - - - -
                                                DAY OF WEEK = WEEKDAY
    1  .0000E+00    2  .0000E+00    3  .0000E+00    4  .0000E+00    5  .0000E+00
6  .0000E+00    7  .1000E+01    8  .1000E+01
    9  .1000E+01   10  .1000E+01   11  .1000E+01   12  .1000E+01   13  .1000E+01
14  .1000E+01   15  .1000E+01   16  .1000E+01
   17  .0000E+00   18  .0000E+00   19  .0000E+00   20  .0000E+00   21  .0000E+00
22  .0000E+00   23  .0000E+00   24  .0000E+00
                                                DAY OF WEEK = SATURDAY
    1  .0000E+00    2  .0000E+00    3  .0000E+00    4  .0000E+00    5  .0000E+00
6  .0000E+00    7  .0000E+00    8  .0000E+00
    9  .0000E+00   10  .0000E+00   11  .0000E+00   12  .0000E+00   13  .0000E+00
14  .0000E+00   15  .0000E+00   16  .0000E+00
   17  .0000E+00   18  .0000E+00   19  .0000E+00   20  .0000E+00   21  .0000E+00
22  .0000E+00   23  .0000E+00   24  .0000E+00
                                                DAY OF WEEK = SUNDAY
    1  .0000E+00    2  .0000E+00    3  .0000E+00    4  .0000E+00    5  .0000E+00
6  .0000E+00    7  .0000E+00    8  .0000E+00
    9  .0000E+00   10  .0000E+00   11  .0000E+00   12  .0000E+00   13  .0000E+00
14  .0000E+00   15  .0000E+00   16  .0000E+00
   17  .0000E+00   18  .0000E+00   19  .0000E+00   20  .0000E+00   21  .0000E+00
22  .0000E+00   23  .0000E+00   24  .0000E+00
```

```
 *** AERMOD - VERSION 22112  ***   *** C:\Lakes\Project Files\Garvey\Garvey.isc
***        03/04/24
 *** AERMET - VERSION  16216 ***   ***
***        13:00:54

PAGE 340
 *** MODELOPTs:    RegDFAULT  CONC  ELEV  URBAN  ADJ_U*

                   * SOURCE EMISSION RATE SCALARS WHICH VARY DIURNALLY AND BY DAY
OF WEEK (HRDOW) *

 SOURCE ID = L0003740     ; SOURCE TYPE = VOLUME   :
  HOUR   SCALAR   HOUR   SCALAR   HOUR   SCALAR   HOUR   SCALAR   HOUR   SCALAR
HOUR   SCALAR   HOUR   SCALAR   HOUR   SCALAR
 - - - - - - - - - - - - - - - - - - - - - - - - - - - - - - - - - - - - - - - -
- - - - - - - - - - - - - - - - - - - - - - - - - -
                                                DAY OF WEEK = WEEKDAY
    1  .0000E+00    2  .0000E+00    3  .0000E+00    4  .0000E+00    5  .0000E+00
6  .0000E+00    7  .1000E+01    8  .1000E+01
    9  .1000E+01   10  .1000E+01   11  .1000E+01   12  .1000E+01   13  .1000E+01
14  .1000E+01   15  .1000E+01   16  .1000E+01
   17  .0000E+00   18  .0000E+00   19  .0000E+00   20  .0000E+00   21  .0000E+00
22  .0000E+00   23  .0000E+00   24  .0000E+00
                                                DAY OF WEEK = SATURDAY
    1  .0000E+00    2  .0000E+00    3  .0000E+00    4  .0000E+00    5  .0000E+00
6  .0000E+00    7  .0000E+00    8  .0000E+00
    9  .0000E+00   10  .0000E+00   11  .0000E+00   12  .0000E+00   13  .0000E+00
14  .0000E+00   15  .0000E+00   16  .0000E+00
   17  .0000E+00   18  .0000E+00   19  .0000E+00   20  .0000E+00   21  .0000E+00
22  .0000E+00   23  .0000E+00   24  .0000E+00
                                                DAY OF WEEK = SUNDAY
    1  .0000E+00    2  .0000E+00    3  .0000E+00    4  .0000E+00    5  .0000E+00
6  .0000E+00    7  .0000E+00    8  .0000E+00
    9  .0000E+00   10  .0000E+00   11  .0000E+00   12  .0000E+00   13  .0000E+00
14  .0000E+00   15  .0000E+00   16  .0000E+00
   17  .0000E+00   18  .0000E+00   19  .0000E+00   20  .0000E+00   21  .0000E+00
22  .0000E+00   23  .0000E+00   24  .0000E+00
```

*** MODELOPTs: RegDFAULT CONC ELEV URBAN ADJ_U*

* SOURCE EMISSION RATE SCALARS WHICH VARY DIURNALLY AND BY DAY OF WEEK (HRDOW) *

SOURCE ID = L0003741 ; SOURCE TYPE = VOLUME :

HOUR	SCALAR	HOUR	SCALAR	HOUR	SCALAR	HOUR	SCALAR	HOUR	SCALAR	HOUR	SCALAR	HOUR	SCALAR	HOUR	SCALAR

DAY OF WEEK = WEEKDAY

1	.0000E+00	2	.0000E+00	3	.0000E+00	4	.0000E+00	5	.0000E+00	6	.0000E+00	7	.1000E+01	8	.1000E+01
9	.1000E+01	10	.1000E+01	11	.1000E+01	12	.1000E+01	13	.1000E+01	14	.1000E+01	15	.1000E+01	16	.1000E+01
17	.0000E+00	18	.0000E+00	19	.0000E+00	20	.0000E+00	21	.0000E+00	22	.0000E+00	23	.0000E+00	24	.0000E+00

DAY OF WEEK = SATURDAY

1	.0000E+00	2	.0000E+00	3	.0000E+00	4	.0000E+00	5	.0000E+00	6	.0000E+00	7	.0000E+00	8	.0000E+00
9	.0000E+00	10	.0000E+00	11	.0000E+00	12	.0000E+00	13	.0000E+00	14	.0000E+00	15	.0000E+00	16	.0000E+00
17	.0000E+00	18	.0000E+00	19	.0000E+00	20	.0000E+00	21	.0000E+00	22	.0000E+00	23	.0000E+00	24	.0000E+00

DAY OF WEEK = SUNDAY

1	.0000E+00	2	.0000E+00	3	.0000E+00	4	.0000E+00	5	.0000E+00	6	.0000E+00	7	.0000E+00	8	.0000E+00
9	.0000E+00	10	.0000E+00	11	.0000E+00	12	.0000E+00	13	.0000E+00	14	.0000E+00	15	.0000E+00	16	.0000E+00
17	.0000E+00	18	.0000E+00	19	.0000E+00	20	.0000E+00	21	.0000E+00	22	.0000E+00	23	.0000E+00	24	.0000E+00

```
 *** AERMOD - VERSION 22112  ***   *** C:\Lakes\Project Files\Garvey\Garvey.isc
***        03/04/24
 *** AERMET - VERSION  16216 ***   ***
***        13:00:54

PAGE 342
 *** MODELOPTs:    RegDFAULT  CONC  ELEV  URBAN  ADJ_U*

                   * SOURCE EMISSION RATE SCALARS WHICH VARY DIURNALLY AND BY DAY
OF WEEK (HRDOW) *

 SOURCE ID = L0003742     ; SOURCE TYPE = VOLUME   :
  HOUR   SCALAR   HOUR   SCALAR   HOUR   SCALAR   HOUR   SCALAR   HOUR   SCALAR
HOUR   SCALAR   HOUR   SCALAR   HOUR   SCALAR
 - - - - - - - - - - - - - - - - - - - - - - - - - - - - - - - - - - - - - - - -
- - - - - - - - - - - - - - - - - - - - - - - - -
                                                DAY OF WEEK = WEEKDAY
    1  .0000E+00    2  .0000E+00    3  .0000E+00    4  .0000E+00    5  .0000E+00
6  .0000E+00    7  .1000E+01    8  .1000E+01
    9  .1000E+01   10  .1000E+01   11  .1000E+01   12  .1000E+01   13  .1000E+01
14  .1000E+01   15  .1000E+01   16  .1000E+01
   17  .0000E+00   18  .0000E+00   19  .0000E+00   20  .0000E+00   21  .0000E+00
22  .0000E+00   23  .0000E+00   24  .0000E+00
                                                DAY OF WEEK = SATURDAY
    1  .0000E+00    2  .0000E+00    3  .0000E+00    4  .0000E+00    5  .0000E+00
6  .0000E+00    7  .0000E+00    8  .0000E+00
    9  .0000E+00   10  .0000E+00   11  .0000E+00   12  .0000E+00   13  .0000E+00
14  .0000E+00   15  .0000E+00   16  .0000E+00
   17  .0000E+00   18  .0000E+00   19  .0000E+00   20  .0000E+00   21  .0000E+00
22  .0000E+00   23  .0000E+00   24  .0000E+00
                                                DAY OF WEEK = SUNDAY
    1  .0000E+00    2  .0000E+00    3  .0000E+00    4  .0000E+00    5  .0000E+00
6  .0000E+00    7  .0000E+00    8  .0000E+00
    9  .0000E+00   10  .0000E+00   11  .0000E+00   12  .0000E+00   13  .0000E+00
14  .0000E+00   15  .0000E+00   16  .0000E+00
   17  .0000E+00   18  .0000E+00   19  .0000E+00   20  .0000E+00   21  .0000E+00
22  .0000E+00   23  .0000E+00   24  .0000E+00
```

```
 *** AERMOD - VERSION 22112  ***   *** C:\Lakes\Project Files\Garvey\Garvey.isc
***        03/04/24
 *** AERMET - VERSION  16216 ***   ***
***        13:00:54

PAGE 343
 *** MODELOPTs:    RegDFAULT  CONC  ELEV  URBAN  ADJ_U*

                   * SOURCE EMISSION RATE SCALARS WHICH VARY DIURNALLY AND BY DAY
OF WEEK (HRDOW) *

 SOURCE ID = L0003743     ; SOURCE TYPE = VOLUME   :
  HOUR   SCALAR   HOUR   SCALAR   HOUR   SCALAR   HOUR   SCALAR   HOUR   SCALAR
HOUR   SCALAR   HOUR   SCALAR   HOUR   SCALAR
 - - - - - - - - - - - - - - - - - - - - - - - - - - - - - - - - - - - - - - - -
- - - - - - - - - - - - - - - - - - - - - - - - -
                                                DAY OF WEEK = WEEKDAY
    1  .0000E+00    2  .0000E+00    3  .0000E+00    4  .0000E+00    5  .0000E+00
6  .0000E+00    7  .1000E+01    8  .1000E+01
    9  .1000E+01   10  .1000E+01   11  .1000E+01   12  .1000E+01   13  .1000E+01
14  .1000E+01   15  .1000E+01   16  .1000E+01
   17  .0000E+00   18  .0000E+00   19  .0000E+00   20  .0000E+00   21  .0000E+00
22  .0000E+00   23  .0000E+00   24  .0000E+00
                                                DAY OF WEEK = SATURDAY
    1  .0000E+00    2  .0000E+00    3  .0000E+00    4  .0000E+00    5  .0000E+00
6  .0000E+00    7  .0000E+00    8  .0000E+00
    9  .0000E+00   10  .0000E+00   11  .0000E+00   12  .0000E+00   13  .0000E+00
14  .0000E+00   15  .0000E+00   16  .0000E+00
   17  .0000E+00   18  .0000E+00   19  .0000E+00   20  .0000E+00   21  .0000E+00
22  .0000E+00   23  .0000E+00   24  .0000E+00
                                                DAY OF WEEK = SUNDAY
    1  .0000E+00    2  .0000E+00    3  .0000E+00    4  .0000E+00    5  .0000E+00
6  .0000E+00    7  .0000E+00    8  .0000E+00
    9  .0000E+00   10  .0000E+00   11  .0000E+00   12  .0000E+00   13  .0000E+00
14  .0000E+00   15  .0000E+00   16  .0000E+00
   17  .0000E+00   18  .0000E+00   19  .0000E+00   20  .0000E+00   21  .0000E+00
22  .0000E+00   23  .0000E+00   24  .0000E+00
```

```
 *** AERMOD - VERSION 22112  ***   *** C:\Lakes\Project Files\Garvey\Garvey.isc
***        03/04/24
 *** AERMET - VERSION  16216 ***   ***
***        13:00:54

PAGE 344
 *** MODELOPTs:    RegDFAULT  CONC  ELEV  URBAN  ADJ_U*

                   * SOURCE EMISSION RATE SCALARS WHICH VARY DIURNALLY AND BY DAY
OF WEEK (HRDOW) *

 SOURCE ID = L0003744     ; SOURCE TYPE = VOLUME   :
  HOUR   SCALAR   HOUR   SCALAR   HOUR   SCALAR   HOUR   SCALAR   HOUR   SCALAR
HOUR   SCALAR   HOUR   SCALAR   HOUR   SCALAR
 - - - - - - - - - - - - - - - - - - - - - - - - - - - - - - - - - - - - - - - -
- - - - - - - - - - - - - - - - - - - - - - - - -
                                                DAY OF WEEK = WEEKDAY
    1  .0000E+00    2  .0000E+00    3  .0000E+00    4  .0000E+00    5  .0000E+00
6  .0000E+00    7  .1000E+01    8  .1000E+01
    9  .1000E+01   10  .1000E+01   11  .1000E+01   12  .1000E+01   13  .1000E+01
14  .1000E+01   15  .1000E+01   16  .1000E+01
   17  .0000E+00   18  .0000E+00   19  .0000E+00   20  .0000E+00   21  .0000E+00
22  .0000E+00   23  .0000E+00   24  .0000E+00
                                                DAY OF WEEK = SATURDAY
    1  .0000E+00    2  .0000E+00    3  .0000E+00    4  .0000E+00    5  .0000E+00
6  .0000E+00    7  .0000E+00    8  .0000E+00
    9  .0000E+00   10  .0000E+00   11  .0000E+00   12  .0000E+00   13  .0000E+00
14  .0000E+00   15  .0000E+00   16  .0000E+00
   17  .0000E+00   18  .0000E+00   19  .0000E+00   20  .0000E+00   21  .0000E+00
22  .0000E+00   23  .0000E+00   24  .0000E+00
                                                DAY OF WEEK = SUNDAY
    1  .0000E+00    2  .0000E+00    3  .0000E+00    4  .0000E+00    5  .0000E+00
6  .0000E+00    7  .0000E+00    8  .0000E+00
    9  .0000E+00   10  .0000E+00   11  .0000E+00   12  .0000E+00   13  .0000E+00
14  .0000E+00   15  .0000E+00   16  .0000E+00
   17  .0000E+00   18  .0000E+00   19  .0000E+00   20  .0000E+00   21  .0000E+00
22  .0000E+00   23  .0000E+00   24  .0000E+00
```

```
 *** AERMOD - VERSION 22112  ***   *** C:\Lakes\Project Files\Garvey\Garvey.isc
***        03/04/24
 *** AERMET - VERSION  16216 ***   ***
***        13:00:54

PAGE 345
 *** MODELOPTs:    RegDFAULT  CONC  ELEV  URBAN  ADJ_U*

                   * SOURCE EMISSION RATE SCALARS WHICH VARY DIURNALLY AND BY DAY
OF WEEK (HRDOW) *

 SOURCE ID = L0003745     ; SOURCE TYPE = VOLUME   :
  HOUR   SCALAR   HOUR   SCALAR   HOUR   SCALAR   HOUR   SCALAR   HOUR   SCALAR
HOUR   SCALAR   HOUR   SCALAR   HOUR   SCALAR
 - - - - - - - - - - - - - - - - - - - - - - - - - - - - - - - - - - - - - - - -
- - - - - - - - - - - - - - - - - - - - - - - - -
                                                DAY OF WEEK = WEEKDAY
    1  .0000E+00    2  .0000E+00    3  .0000E+00    4  .0000E+00    5  .0000E+00
6  .0000E+00    7  .1000E+01    8  .1000E+01
    9  .1000E+01   10  .1000E+01   11  .1000E+01   12  .1000E+01   13  .1000E+01
14  .1000E+01   15  .1000E+01   16  .1000E+01
   17  .0000E+00   18  .0000E+00   19  .0000E+00   20  .0000E+00   21  .0000E+00
22  .0000E+00   23  .0000E+00   24  .0000E+00
                                                DAY OF WEEK = SATURDAY
    1  .0000E+00    2  .0000E+00    3  .0000E+00    4  .0000E+00    5  .0000E+00
6  .0000E+00    7  .0000E+00    8  .0000E+00
    9  .0000E+00   10  .0000E+00   11  .0000E+00   12  .0000E+00   13  .0000E+00
14  .0000E+00   15  .0000E+00   16  .0000E+00
   17  .0000E+00   18  .0000E+00   19  .0000E+00   20  .0000E+00   21  .0000E+00
22  .0000E+00   23  .0000E+00   24  .0000E+00
                                                DAY OF WEEK = SUNDAY
    1  .0000E+00    2  .0000E+00    3  .0000E+00    4  .0000E+00    5  .0000E+00
6  .0000E+00    7  .0000E+00    8  .0000E+00
    9  .0000E+00   10  .0000E+00   11  .0000E+00   12  .0000E+00   13  .0000E+00
14  .0000E+00   15  .0000E+00   16  .0000E+00
   17  .0000E+00   18  .0000E+00   19  .0000E+00   20  .0000E+00   21  .0000E+00
22  .0000E+00   23  .0000E+00   24  .0000E+00
```

*** MODELOPTs: RegDFAULT CONC ELEV URBAN ADJ_U*

* SOURCE EMISSION RATE SCALARS WHICH VARY DIURNALLY AND BY DAY OF WEEK (HRDOW) *

SOURCE ID = L0003746 ; SOURCE TYPE = VOLUME :

HOUR	SCALAR	HOUR	SCALAR	HOUR	SCALAR	HOUR	SCALAR	HOUR	SCALAR	HOUR	SCALAR	HOUR	SCALAR	HOUR	SCALAR

DAY OF WEEK = WEEKDAY

1	.0000E+00	2	.0000E+00	3	.0000E+00	4	.0000E+00	5	.0000E+00	6	.0000E+00	7	.1000E+01	8	.1000E+01
9	.1000E+01	10	.1000E+01	11	.1000E+01	12	.1000E+01	13	.1000E+01	14	.1000E+01	15	.1000E+01	16	.1000E+01
17	.0000E+00	18	.0000E+00	19	.0000E+00	20	.0000E+00	21	.0000E+00	22	.0000E+00	23	.0000E+00	24	.0000E+00

DAY OF WEEK = SATURDAY

1	.0000E+00	2	.0000E+00	3	.0000E+00	4	.0000E+00	5	.0000E+00	6	.0000E+00	7	.0000E+00	8	.0000E+00
9	.0000E+00	10	.0000E+00	11	.0000E+00	12	.0000E+00	13	.0000E+00	14	.0000E+00	15	.0000E+00	16	.0000E+00
17	.0000E+00	18	.0000E+00	19	.0000E+00	20	.0000E+00	21	.0000E+00	22	.0000E+00	23	.0000E+00	24	.0000E+00

DAY OF WEEK = SUNDAY

1	.0000E+00	2	.0000E+00	3	.0000E+00	4	.0000E+00	5	.0000E+00	6	.0000E+00	7	.0000E+00	8	.0000E+00
9	.0000E+00	10	.0000E+00	11	.0000E+00	12	.0000E+00	13	.0000E+00	14	.0000E+00	15	.0000E+00	16	.0000E+00
17	.0000E+00	18	.0000E+00	19	.0000E+00	20	.0000E+00	21	.0000E+00	22	.0000E+00	23	.0000E+00	24	.0000E+00

```
 *** AERMOD - VERSION 22112  ***   *** C:\Lakes\Project Files\Garvey\Garvey.isc
***        03/04/24
 *** AERMET - VERSION  16216 ***   ***
***        13:00:54

PAGE 347
 *** MODELOPTs:    RegDFAULT  CONC  ELEV  URBAN  ADJ_U*

                   * SOURCE EMISSION RATE SCALARS WHICH VARY DIURNALLY AND BY DAY
OF WEEK (HRDOW) *

 SOURCE ID = L0003747     ; SOURCE TYPE = VOLUME   :
  HOUR   SCALAR   HOUR   SCALAR   HOUR   SCALAR   HOUR   SCALAR   HOUR   SCALAR
HOUR   SCALAR   HOUR   SCALAR   HOUR   SCALAR
 - - - - - - - - - - - - - - - - - - - - - - - - - - - - - - - - - - - - - - - -
- - - - - - - - - - - - - - - - - - - - - - - - -
                                                DAY OF WEEK = WEEKDAY
    1  .0000E+00    2  .0000E+00    3  .0000E+00    4  .0000E+00    5  .0000E+00
6  .0000E+00    7  .1000E+01    8  .1000E+01
    9  .1000E+01   10  .1000E+01   11  .1000E+01   12  .1000E+01   13  .1000E+01
14  .1000E+01   15  .1000E+01   16  .1000E+01
   17  .0000E+00   18  .0000E+00   19  .0000E+00   20  .0000E+00   21  .0000E+00
22  .0000E+00   23  .0000E+00   24  .0000E+00
                                                DAY OF WEEK = SATURDAY
    1  .0000E+00    2  .0000E+00    3  .0000E+00    4  .0000E+00    5  .0000E+00
6  .0000E+00    7  .0000E+00    8  .0000E+00
    9  .0000E+00   10  .0000E+00   11  .0000E+00   12  .0000E+00   13  .0000E+00
14  .0000E+00   15  .0000E+00   16  .0000E+00
   17  .0000E+00   18  .0000E+00   19  .0000E+00   20  .0000E+00   21  .0000E+00
22  .0000E+00   23  .0000E+00   24  .0000E+00
                                                DAY OF WEEK = SUNDAY
    1  .0000E+00    2  .0000E+00    3  .0000E+00    4  .0000E+00    5  .0000E+00
6  .0000E+00    7  .0000E+00    8  .0000E+00
    9  .0000E+00   10  .0000E+00   11  .0000E+00   12  .0000E+00   13  .0000E+00
14  .0000E+00   15  .0000E+00   16  .0000E+00
   17  .0000E+00   18  .0000E+00   19  .0000E+00   20  .0000E+00   21  .0000E+00
22  .0000E+00   23  .0000E+00   24  .0000E+00
```

```
 *** AERMOD - VERSION 22112  ***   *** C:\Lakes\Project Files\Garvey\Garvey.isc
***        03/04/24
 *** AERMET - VERSION  16216 ***   ***
***        13:00:54

PAGE 348
 *** MODELOPTs:    RegDFAULT  CONC  ELEV  URBAN  ADJ_U*

                   * SOURCE EMISSION RATE SCALARS WHICH VARY DIURNALLY AND BY DAY
OF WEEK (HRDOW) *

 SOURCE ID = L0003748     ; SOURCE TYPE = VOLUME   :
  HOUR   SCALAR   HOUR   SCALAR   HOUR   SCALAR   HOUR   SCALAR   HOUR   SCALAR
HOUR   SCALAR   HOUR   SCALAR   HOUR   SCALAR
 - - - - - - - - - - - - - - - - - - - - - - - - - - - - - - - - - - - - - - - -
- - - - - - - - - - - - - - - - - - - - - - - - -
                                                DAY OF WEEK = WEEKDAY
    1  .0000E+00    2  .0000E+00    3  .0000E+00    4  .0000E+00    5  .0000E+00
6  .0000E+00    7  .1000E+01    8  .1000E+01
    9  .1000E+01   10  .1000E+01   11  .1000E+01   12  .1000E+01   13  .1000E+01
14  .1000E+01   15  .1000E+01   16  .1000E+01
   17  .0000E+00   18  .0000E+00   19  .0000E+00   20  .0000E+00   21  .0000E+00
22  .0000E+00   23  .0000E+00   24  .0000E+00
                                                DAY OF WEEK = SATURDAY
    1  .0000E+00    2  .0000E+00    3  .0000E+00    4  .0000E+00    5  .0000E+00
6  .0000E+00    7  .0000E+00    8  .0000E+00
    9  .0000E+00   10  .0000E+00   11  .0000E+00   12  .0000E+00   13  .0000E+00
14  .0000E+00   15  .0000E+00   16  .0000E+00
   17  .0000E+00   18  .0000E+00   19  .0000E+00   20  .0000E+00   21  .0000E+00
22  .0000E+00   23  .0000E+00   24  .0000E+00
                                                DAY OF WEEK = SUNDAY
    1  .0000E+00    2  .0000E+00    3  .0000E+00    4  .0000E+00    5  .0000E+00
6  .0000E+00    7  .0000E+00    8  .0000E+00
    9  .0000E+00   10  .0000E+00   11  .0000E+00   12  .0000E+00   13  .0000E+00
14  .0000E+00   15  .0000E+00   16  .0000E+00
   17  .0000E+00   18  .0000E+00   19  .0000E+00   20  .0000E+00   21  .0000E+00
22  .0000E+00   23  .0000E+00   24  .0000E+00
```

*** MODELOPTs: RegDFAULT CONC ELEV URBAN ADJ_U*

* SOURCE EMISSION RATE SCALARS WHICH VARY DIURNALLY AND BY DAY OF WEEK (HRDOW) *

SOURCE ID = L0003749 ; SOURCE TYPE = VOLUME :

HOUR	SCALAR	HOUR	SCALAR	HOUR	SCALAR	HOUR	SCALAR	HOUR	SCALAR	HOUR	SCALAR	HOUR	SCALAR	HOUR	SCALAR

DAY OF WEEK = WEEKDAY

1	.0000E+00	2	.0000E+00	3	.0000E+00	4	.0000E+00	5	.0000E+00	6	.0000E+00	7	.1000E+01	8	.1000E+01
9	.1000E+01	10	.1000E+01	11	.1000E+01	12	.1000E+01	13	.1000E+01	14	.1000E+01	15	.1000E+01	16	.1000E+01
17	.0000E+00	18	.0000E+00	19	.0000E+00	20	.0000E+00	21	.0000E+00	22	.0000E+00	23	.0000E+00	24	.0000E+00

DAY OF WEEK = SATURDAY

1	.0000E+00	2	.0000E+00	3	.0000E+00	4	.0000E+00	5	.0000E+00	6	.0000E+00	7	.0000E+00	8	.0000E+00
9	.0000E+00	10	.0000E+00	11	.0000E+00	12	.0000E+00	13	.0000E+00	14	.0000E+00	15	.0000E+00	16	.0000E+00
17	.0000E+00	18	.0000E+00	19	.0000E+00	20	.0000E+00	21	.0000E+00	22	.0000E+00	23	.0000E+00	24	.0000E+00

DAY OF WEEK = SUNDAY

1	.0000E+00	2	.0000E+00	3	.0000E+00	4	.0000E+00	5	.0000E+00	6	.0000E+00	7	.0000E+00	8	.0000E+00
9	.0000E+00	10	.0000E+00	11	.0000E+00	12	.0000E+00	13	.0000E+00	14	.0000E+00	15	.0000E+00	16	.0000E+00
17	.0000E+00	18	.0000E+00	19	.0000E+00	20	.0000E+00	21	.0000E+00	22	.0000E+00	23	.0000E+00	24	.0000E+00

```
 *** AERMOD - VERSION 22112  ***   *** C:\Lakes\Project Files\Garvey\Garvey.isc
***        03/04/24
 *** AERMET - VERSION  16216 ***   ***
***        13:00:54

PAGE 350
 *** MODELOPTs:    RegDFAULT  CONC  ELEV  URBAN  ADJ_U*

                   * SOURCE EMISSION RATE SCALARS WHICH VARY DIURNALLY AND BY DAY
OF WEEK (HRDOW) *

 SOURCE ID = L0003750     ; SOURCE TYPE = VOLUME   :
  HOUR   SCALAR   HOUR   SCALAR   HOUR   SCALAR   HOUR   SCALAR   HOUR   SCALAR
HOUR   SCALAR   HOUR   SCALAR   HOUR   SCALAR
 - - - - - - - - - - - - - - - - - - - - - - - - - - - - - - - - - - - - - - - -
- - - - - - - - - - - - - - - - - - - - - - - - - -
                                                DAY OF WEEK = WEEKDAY
    1  .0000E+00    2  .0000E+00    3  .0000E+00    4  .0000E+00    5  .0000E+00
6  .0000E+00    7  .1000E+01    8  .1000E+01
    9  .1000E+01   10  .1000E+01   11  .1000E+01   12  .1000E+01   13  .1000E+01
14  .1000E+01   15  .1000E+01   16  .1000E+01
   17  .0000E+00   18  .0000E+00   19  .0000E+00   20  .0000E+00   21  .0000E+00
22  .0000E+00   23  .0000E+00   24  .0000E+00
                                                DAY OF WEEK = SATURDAY
    1  .0000E+00    2  .0000E+00    3  .0000E+00    4  .0000E+00    5  .0000E+00
6  .0000E+00    7  .0000E+00    8  .0000E+00
    9  .0000E+00   10  .0000E+00   11  .0000E+00   12  .0000E+00   13  .0000E+00
14  .0000E+00   15  .0000E+00   16  .0000E+00
   17  .0000E+00   18  .0000E+00   19  .0000E+00   20  .0000E+00   21  .0000E+00
22  .0000E+00   23  .0000E+00   24  .0000E+00
                                                DAY OF WEEK = SUNDAY
    1  .0000E+00    2  .0000E+00    3  .0000E+00    4  .0000E+00    5  .0000E+00
6  .0000E+00    7  .0000E+00    8  .0000E+00
    9  .0000E+00   10  .0000E+00   11  .0000E+00   12  .0000E+00   13  .0000E+00
14  .0000E+00   15  .0000E+00   16  .0000E+00
   17  .0000E+00   18  .0000E+00   19  .0000E+00   20  .0000E+00   21  .0000E+00
22  .0000E+00   23  .0000E+00   24  .0000E+00
```

*** MODELOPTs: RegDFAULT CONC ELEV URBAN ADJ_U*

* SOURCE EMISSION RATE SCALARS WHICH VARY DIURNALLY AND BY DAY OF WEEK (HRDOW) *

SOURCE ID = L0003751 ; SOURCE TYPE = VOLUME :

HOUR	SCALAR	HOUR	SCALAR	HOUR	SCALAR	HOUR	SCALAR	HOUR	SCALAR	HOUR	SCALAR	HOUR	SCALAR	HOUR	SCALAR

DAY OF WEEK = WEEKDAY

1	.0000E+00	2	.0000E+00	3	.0000E+00	4	.0000E+00	5	.0000E+00	6	.0000E+00	7	.1000E+01	8	.1000E+01
9	.1000E+01	10	.1000E+01	11	.1000E+01	12	.1000E+01	13	.1000E+01	14	.1000E+01	15	.1000E+01	16	.1000E+01
17	.0000E+00	18	.0000E+00	19	.0000E+00	20	.0000E+00	21	.0000E+00	22	.0000E+00	23	.0000E+00	24	.0000E+00

DAY OF WEEK = SATURDAY

1	.0000E+00	2	.0000E+00	3	.0000E+00	4	.0000E+00	5	.0000E+00	6	.0000E+00	7	.0000E+00	8	.0000E+00
9	.0000E+00	10	.0000E+00	11	.0000E+00	12	.0000E+00	13	.0000E+00	14	.0000E+00	15	.0000E+00	16	.0000E+00
17	.0000E+00	18	.0000E+00	19	.0000E+00	20	.0000E+00	21	.0000E+00	22	.0000E+00	23	.0000E+00	24	.0000E+00

DAY OF WEEK = SUNDAY

1	.0000E+00	2	.0000E+00	3	.0000E+00	4	.0000E+00	5	.0000E+00	6	.0000E+00	7	.0000E+00	8	.0000E+00
9	.0000E+00	10	.0000E+00	11	.0000E+00	12	.0000E+00	13	.0000E+00	14	.0000E+00	15	.0000E+00	16	.0000E+00
17	.0000E+00	18	.0000E+00	19	.0000E+00	20	.0000E+00	21	.0000E+00	22	.0000E+00	23	.0000E+00	24	.0000E+00

```
 *** AERMOD - VERSION 22112  ***   *** C:\Lakes\Project Files\Garvey\Garvey.isc
***        03/04/24
 *** AERMET - VERSION  16216 ***   ***
***        13:00:54

PAGE 352
 *** MODELOPTs:    RegDFAULT  CONC  ELEV  URBAN  ADJ_U*

                   * SOURCE EMISSION RATE SCALARS WHICH VARY DIURNALLY AND BY DAY
OF WEEK (HRDOW) *

 SOURCE ID = L0003752     ; SOURCE TYPE = VOLUME   :
  HOUR   SCALAR   HOUR   SCALAR   HOUR   SCALAR   HOUR   SCALAR   HOUR   SCALAR
HOUR   SCALAR   HOUR   SCALAR   HOUR   SCALAR
 - - - - - - - - - - - - - - - - - - - - - - - - - - - - - - - - - - - - - - - -
- - - - - - - - - - - - - - - - - - - - - - - - -
                                                DAY OF WEEK = WEEKDAY
    1  .0000E+00    2  .0000E+00    3  .0000E+00    4  .0000E+00    5  .0000E+00
6  .0000E+00    7  .1000E+01    8  .1000E+01
    9  .1000E+01   10  .1000E+01   11  .1000E+01   12  .1000E+01   13  .1000E+01
14  .1000E+01   15  .1000E+01   16  .1000E+01
   17  .0000E+00   18  .0000E+00   19  .0000E+00   20  .0000E+00   21  .0000E+00
22  .0000E+00   23  .0000E+00   24  .0000E+00
                                                DAY OF WEEK = SATURDAY
    1  .0000E+00    2  .0000E+00    3  .0000E+00    4  .0000E+00    5  .0000E+00
6  .0000E+00    7  .0000E+00    8  .0000E+00
    9  .0000E+00   10  .0000E+00   11  .0000E+00   12  .0000E+00   13  .0000E+00
14  .0000E+00   15  .0000E+00   16  .0000E+00
   17  .0000E+00   18  .0000E+00   19  .0000E+00   20  .0000E+00   21  .0000E+00
22  .0000E+00   23  .0000E+00   24  .0000E+00
                                                DAY OF WEEK = SUNDAY
    1  .0000E+00    2  .0000E+00    3  .0000E+00    4  .0000E+00    5  .0000E+00
6  .0000E+00    7  .0000E+00    8  .0000E+00
    9  .0000E+00   10  .0000E+00   11  .0000E+00   12  .0000E+00   13  .0000E+00
14  .0000E+00   15  .0000E+00   16  .0000E+00
   17  .0000E+00   18  .0000E+00   19  .0000E+00   20  .0000E+00   21  .0000E+00
22  .0000E+00   23  .0000E+00   24  .0000E+00
```

```
 *** AERMOD - VERSION 22112  ***   *** C:\Lakes\Project Files\Garvey\Garvey.isc
***        03/04/24
 *** AERMET - VERSION  16216 ***   ***
***        13:00:54

PAGE 353
 *** MODELOPTs:    RegDFAULT  CONC  ELEV  URBAN  ADJ_U*

                   * SOURCE EMISSION RATE SCALARS WHICH VARY DIURNALLY AND BY DAY
OF WEEK (HRDOW) *

 SOURCE ID = L0003753     ; SOURCE TYPE = VOLUME   :
  HOUR   SCALAR   HOUR   SCALAR   HOUR   SCALAR   HOUR   SCALAR   HOUR   SCALAR
HOUR   SCALAR   HOUR   SCALAR   HOUR   SCALAR
 - - - - - - - - - - - - - - - - - - - - - - - - - - - - - - - - - - - - - - - -
- - - - - - - - - - - - - - - - - - - - - - - - -
                                                DAY OF WEEK = WEEKDAY
    1  .0000E+00    2  .0000E+00    3  .0000E+00    4  .0000E+00    5  .0000E+00
6  .0000E+00    7  .1000E+01    8  .1000E+01
    9  .1000E+01   10  .1000E+01   11  .1000E+01   12  .1000E+01   13  .1000E+01
14  .1000E+01   15  .1000E+01   16  .1000E+01
   17  .0000E+00   18  .0000E+00   19  .0000E+00   20  .0000E+00   21  .0000E+00
22  .0000E+00   23  .0000E+00   24  .0000E+00
                                                DAY OF WEEK = SATURDAY
    1  .0000E+00    2  .0000E+00    3  .0000E+00    4  .0000E+00    5  .0000E+00
6  .0000E+00    7  .0000E+00    8  .0000E+00
    9  .0000E+00   10  .0000E+00   11  .0000E+00   12  .0000E+00   13  .0000E+00
14  .0000E+00   15  .0000E+00   16  .0000E+00
   17  .0000E+00   18  .0000E+00   19  .0000E+00   20  .0000E+00   21  .0000E+00
22  .0000E+00   23  .0000E+00   24  .0000E+00
                                                DAY OF WEEK = SUNDAY
    1  .0000E+00    2  .0000E+00    3  .0000E+00    4  .0000E+00    5  .0000E+00
6  .0000E+00    7  .0000E+00    8  .0000E+00
    9  .0000E+00   10  .0000E+00   11  .0000E+00   12  .0000E+00   13  .0000E+00
14  .0000E+00   15  .0000E+00   16  .0000E+00
   17  .0000E+00   18  .0000E+00   19  .0000E+00   20  .0000E+00   21  .0000E+00
22  .0000E+00   23  .0000E+00   24  .0000E+00
```

*** MODELOPTs: RegDFAULT CONC ELEV URBAN ADJ_U*

* SOURCE EMISSION RATE SCALARS WHICH VARY DIURNALLY AND BY DAY OF WEEK (HRDOW) *

SOURCE ID = L0003754 ; SOURCE TYPE = VOLUME :

HOUR	SCALAR	HOUR	SCALAR	HOUR	SCALAR	HOUR	SCALAR	HOUR	SCALAR	HOUR	SCALAR	HOUR	SCALAR	HOUR	SCALAR

DAY OF WEEK = WEEKDAY

1	.0000E+00	2	.0000E+00	3	.0000E+00	4	.0000E+00	5	.0000E+00	6	.0000E+00	7	.1000E+01	8	.1000E+01
9	.1000E+01	10	.1000E+01	11	.1000E+01	12	.1000E+01	13	.1000E+01	14	.1000E+01	15	.1000E+01	16	.1000E+01
17	.0000E+00	18	.0000E+00	19	.0000E+00	20	.0000E+00	21	.0000E+00	22	.0000E+00	23	.0000E+00	24	.0000E+00

DAY OF WEEK = SATURDAY

1	.0000E+00	2	.0000E+00	3	.0000E+00	4	.0000E+00	5	.0000E+00	6	.0000E+00	7	.0000E+00	8	.0000E+00
9	.0000E+00	10	.0000E+00	11	.0000E+00	12	.0000E+00	13	.0000E+00	14	.0000E+00	15	.0000E+00	16	.0000E+00
17	.0000E+00	18	.0000E+00	19	.0000E+00	20	.0000E+00	21	.0000E+00	22	.0000E+00	23	.0000E+00	24	.0000E+00

DAY OF WEEK = SUNDAY

1	.0000E+00	2	.0000E+00	3	.0000E+00	4	.0000E+00	5	.0000E+00	6	.0000E+00	7	.0000E+00	8	.0000E+00
9	.0000E+00	10	.0000E+00	11	.0000E+00	12	.0000E+00	13	.0000E+00	14	.0000E+00	15	.0000E+00	16	.0000E+00
17	.0000E+00	18	.0000E+00	19	.0000E+00	20	.0000E+00	21	.0000E+00	22	.0000E+00	23	.0000E+00	24	.0000E+00

```
 *** AERMOD - VERSION 22112  ***   *** C:\Lakes\Project Files\Garvey\Garvey.isc
***        03/04/24
 *** AERMET - VERSION  16216 ***   ***
***        13:00:54

PAGE 355
 *** MODELOPTs:    RegDFAULT  CONC  ELEV  URBAN  ADJ_U*

                   * SOURCE EMISSION RATE SCALARS WHICH VARY DIURNALLY AND BY DAY
OF WEEK (HRDOW) *

 SOURCE ID = L0003755     ; SOURCE TYPE = VOLUME   :
  HOUR   SCALAR   HOUR   SCALAR   HOUR   SCALAR   HOUR   SCALAR   HOUR   SCALAR
HOUR   SCALAR   HOUR   SCALAR   HOUR   SCALAR
 - - - - - - - - - - - - - - - - - - - - - - - - - - - - - - - - - - - - - - - -
- - - - - - - - - - - - - - - - - - - - - - - - -
                                                DAY OF WEEK = WEEKDAY
    1  .0000E+00    2  .0000E+00    3  .0000E+00    4  .0000E+00    5  .0000E+00
6  .0000E+00    7  .1000E+01    8  .1000E+01
    9  .1000E+01   10  .1000E+01   11  .1000E+01   12  .1000E+01   13  .1000E+01
14  .1000E+01   15  .1000E+01   16  .1000E+01
   17  .0000E+00   18  .0000E+00   19  .0000E+00   20  .0000E+00   21  .0000E+00
22  .0000E+00   23  .0000E+00   24  .0000E+00
                                                DAY OF WEEK = SATURDAY
    1  .0000E+00    2  .0000E+00    3  .0000E+00    4  .0000E+00    5  .0000E+00
6  .0000E+00    7  .0000E+00    8  .0000E+00
    9  .0000E+00   10  .0000E+00   11  .0000E+00   12  .0000E+00   13  .0000E+00
14  .0000E+00   15  .0000E+00   16  .0000E+00
   17  .0000E+00   18  .0000E+00   19  .0000E+00   20  .0000E+00   21  .0000E+00
22  .0000E+00   23  .0000E+00   24  .0000E+00
                                                DAY OF WEEK = SUNDAY
    1  .0000E+00    2  .0000E+00    3  .0000E+00    4  .0000E+00    5  .0000E+00
6  .0000E+00    7  .0000E+00    8  .0000E+00
    9  .0000E+00   10  .0000E+00   11  .0000E+00   12  .0000E+00   13  .0000E+00
14  .0000E+00   15  .0000E+00   16  .0000E+00
   17  .0000E+00   18  .0000E+00   19  .0000E+00   20  .0000E+00   21  .0000E+00
22  .0000E+00   23  .0000E+00   24  .0000E+00
```

*** MODELOPTs: RegDFAULT CONC ELEV URBAN ADJ_U*

* SOURCE EMISSION RATE SCALARS WHICH VARY DIURNALLY AND BY DAY OF WEEK (HRDOW) *

SOURCE ID = L0003756 ; SOURCE TYPE = VOLUME :

HOUR	SCALAR	HOUR	SCALAR	HOUR	SCALAR	HOUR	SCALAR	HOUR	SCALAR	HOUR	SCALAR	HOUR	SCALAR	HOUR	SCALAR

DAY OF WEEK = WEEKDAY

HOUR	SCALAR	HOUR	SCALAR	HOUR	SCALAR	HOUR	SCALAR	HOUR	SCALAR	HOUR	SCALAR	HOUR	SCALAR	HOUR	SCALAR
1	.0000E+00	2	.0000E+00	3	.0000E+00	4	.0000E+00	5	.0000E+00	6	.0000E+00	7	.1000E+01	8	.1000E+01
9	.1000E+01	10	.1000E+01	11	.1000E+01	12	.1000E+01	13	.1000E+01	14	.1000E+01	15	.1000E+01	16	.1000E+01
17	.0000E+00	18	.0000E+00	19	.0000E+00	20	.0000E+00	21	.0000E+00	22	.0000E+00	23	.0000E+00	24	.0000E+00

DAY OF WEEK = SATURDAY

HOUR	SCALAR	HOUR	SCALAR	HOUR	SCALAR	HOUR	SCALAR	HOUR	SCALAR	HOUR	SCALAR	HOUR	SCALAR	HOUR	SCALAR
1	.0000E+00	2	.0000E+00	3	.0000E+00	4	.0000E+00	5	.0000E+00	6	.0000E+00	7	.0000E+00	8	.0000E+00
9	.0000E+00	10	.0000E+00	11	.0000E+00	12	.0000E+00	13	.0000E+00	14	.0000E+00	15	.0000E+00	16	.0000E+00
17	.0000E+00	18	.0000E+00	19	.0000E+00	20	.0000E+00	21	.0000E+00	22	.0000E+00	23	.0000E+00	24	.0000E+00

DAY OF WEEK = SUNDAY

HOUR	SCALAR	HOUR	SCALAR	HOUR	SCALAR	HOUR	SCALAR	HOUR	SCALAR	HOUR	SCALAR	HOUR	SCALAR	HOUR	SCALAR
1	.0000E+00	2	.0000E+00	3	.0000E+00	4	.0000E+00	5	.0000E+00	6	.0000E+00	7	.0000E+00	8	.0000E+00
9	.0000E+00	10	.0000E+00	11	.0000E+00	12	.0000E+00	13	.0000E+00	14	.0000E+00	15	.0000E+00	16	.0000E+00
17	.0000E+00	18	.0000E+00	19	.0000E+00	20	.0000E+00	21	.0000E+00	22	.0000E+00	23	.0000E+00	24	.0000E+00

```
 *** AERMOD - VERSION 22112  ***   *** C:\Lakes\Project Files\Garvey\Garvey.isc
***        03/04/24
 *** AERMET - VERSION  16216 ***   ***
***        13:00:54

PAGE 357
 *** MODELOPTs:    RegDFAULT  CONC  ELEV  URBAN  ADJ_U*

                   * SOURCE EMISSION RATE SCALARS WHICH VARY DIURNALLY AND BY DAY
OF WEEK (HRDOW) *

 SOURCE ID = L0003757     ; SOURCE TYPE = VOLUME   :
  HOUR   SCALAR   HOUR   SCALAR   HOUR   SCALAR   HOUR   SCALAR   HOUR   SCALAR
HOUR   SCALAR   HOUR   SCALAR   HOUR   SCALAR
 - - - - - - - - - - - - - - - - - - - - - - - - - - - - - - - - - - - - - - - -
- - - - - - - - - - - - - - - - - - - - - - - - -
                                                DAY OF WEEK = WEEKDAY
    1  .0000E+00    2  .0000E+00    3  .0000E+00    4  .0000E+00    5  .0000E+00
6  .0000E+00    7  .1000E+01    8  .1000E+01
    9  .1000E+01   10  .1000E+01   11  .1000E+01   12  .1000E+01   13  .1000E+01
14  .1000E+01   15  .1000E+01   16  .1000E+01
   17  .0000E+00   18  .0000E+00   19  .0000E+00   20  .0000E+00   21  .0000E+00
22  .0000E+00   23  .0000E+00   24  .0000E+00
                                                DAY OF WEEK = SATURDAY
    1  .0000E+00    2  .0000E+00    3  .0000E+00    4  .0000E+00    5  .0000E+00
6  .0000E+00    7  .0000E+00    8  .0000E+00
    9  .0000E+00   10  .0000E+00   11  .0000E+00   12  .0000E+00   13  .0000E+00
14  .0000E+00   15  .0000E+00   16  .0000E+00
   17  .0000E+00   18  .0000E+00   19  .0000E+00   20  .0000E+00   21  .0000E+00
22  .0000E+00   23  .0000E+00   24  .0000E+00
                                                DAY OF WEEK = SUNDAY
    1  .0000E+00    2  .0000E+00    3  .0000E+00    4  .0000E+00    5  .0000E+00
6  .0000E+00    7  .0000E+00    8  .0000E+00
    9  .0000E+00   10  .0000E+00   11  .0000E+00   12  .0000E+00   13  .0000E+00
14  .0000E+00   15  .0000E+00   16  .0000E+00
   17  .0000E+00   18  .0000E+00   19  .0000E+00   20  .0000E+00   21  .0000E+00
22  .0000E+00   23  .0000E+00   24  .0000E+00
```

```
 *** AERMOD - VERSION 22112  ***   *** C:\Lakes\Project Files\Garvey\Garvey.isc
***        03/04/24
 *** AERMET - VERSION  16216 ***   ***
***        13:00:54

PAGE 358
 *** MODELOPTs:    RegDFAULT  CONC  ELEV  URBAN  ADJ_U*

                   * SOURCE EMISSION RATE SCALARS WHICH VARY DIURNALLY AND BY DAY
OF WEEK (HRDOW) *

 SOURCE ID = L0003758     ; SOURCE TYPE = VOLUME   :
  HOUR   SCALAR   HOUR   SCALAR   HOUR   SCALAR   HOUR   SCALAR   HOUR   SCALAR
HOUR   SCALAR   HOUR   SCALAR   HOUR   SCALAR
 - - - - - - - - - - - - - - - - - - - - - - - - - - - - - - - - - - - - - - - -
- - - - - - - - - - - - - - - - - - - - - - - - -
                                                DAY OF WEEK = WEEKDAY
    1  .0000E+00    2  .0000E+00    3  .0000E+00    4  .0000E+00    5  .0000E+00
6  .0000E+00    7  .1000E+01    8  .1000E+01
    9  .1000E+01   10  .1000E+01   11  .1000E+01   12  .1000E+01   13  .1000E+01
14  .1000E+01   15  .1000E+01   16  .1000E+01
   17  .0000E+00   18  .0000E+00   19  .0000E+00   20  .0000E+00   21  .0000E+00
22  .0000E+00   23  .0000E+00   24  .0000E+00
                                                DAY OF WEEK = SATURDAY
    1  .0000E+00    2  .0000E+00    3  .0000E+00    4  .0000E+00    5  .0000E+00
6  .0000E+00    7  .0000E+00    8  .0000E+00
    9  .0000E+00   10  .0000E+00   11  .0000E+00   12  .0000E+00   13  .0000E+00
14  .0000E+00   15  .0000E+00   16  .0000E+00
   17  .0000E+00   18  .0000E+00   19  .0000E+00   20  .0000E+00   21  .0000E+00
22  .0000E+00   23  .0000E+00   24  .0000E+00
                                                DAY OF WEEK = SUNDAY
    1  .0000E+00    2  .0000E+00    3  .0000E+00    4  .0000E+00    5  .0000E+00
6  .0000E+00    7  .0000E+00    8  .0000E+00
    9  .0000E+00   10  .0000E+00   11  .0000E+00   12  .0000E+00   13  .0000E+00
14  .0000E+00   15  .0000E+00   16  .0000E+00
   17  .0000E+00   18  .0000E+00   19  .0000E+00   20  .0000E+00   21  .0000E+00
22  .0000E+00   23  .0000E+00   24  .0000E+00
```

```
 *** AERMOD - VERSION 22112  ***   *** C:\Lakes\Project Files\Garvey\Garvey.isc
***        03/04/24
 *** AERMET - VERSION  16216 ***   ***
***        13:00:54

PAGE 359
 *** MODELOPTs:    RegDFAULT  CONC  ELEV  URBAN  ADJ_U*

                   * SOURCE EMISSION RATE SCALARS WHICH VARY DIURNALLY AND BY DAY
OF WEEK (HRDOW) *

 SOURCE ID = L0003759     ; SOURCE TYPE = VOLUME   :
  HOUR   SCALAR   HOUR   SCALAR   HOUR   SCALAR   HOUR   SCALAR   HOUR   SCALAR
HOUR   SCALAR   HOUR   SCALAR   HOUR   SCALAR
 - - - - - - - - - - - - - - - - - - - - - - - - - - - - - - - - - - - - - - - -
- - - - - - - - - - - - - - - - - - - - - - - - -
                                                DAY OF WEEK = WEEKDAY
    1  .0000E+00    2  .0000E+00    3  .0000E+00    4  .0000E+00    5  .0000E+00
6  .0000E+00    7  .1000E+01    8  .1000E+01
    9  .1000E+01   10  .1000E+01   11  .1000E+01   12  .1000E+01   13  .1000E+01
14  .1000E+01   15  .1000E+01   16  .1000E+01
   17  .0000E+00   18  .0000E+00   19  .0000E+00   20  .0000E+00   21  .0000E+00
22  .0000E+00   23  .0000E+00   24  .0000E+00
                                                DAY OF WEEK = SATURDAY
    1  .0000E+00    2  .0000E+00    3  .0000E+00    4  .0000E+00    5  .0000E+00
6  .0000E+00    7  .0000E+00    8  .0000E+00
    9  .0000E+00   10  .0000E+00   11  .0000E+00   12  .0000E+00   13  .0000E+00
14  .0000E+00   15  .0000E+00   16  .0000E+00
   17  .0000E+00   18  .0000E+00   19  .0000E+00   20  .0000E+00   21  .0000E+00
22  .0000E+00   23  .0000E+00   24  .0000E+00
                                                DAY OF WEEK = SUNDAY
    1  .0000E+00    2  .0000E+00    3  .0000E+00    4  .0000E+00    5  .0000E+00
6  .0000E+00    7  .0000E+00    8  .0000E+00
    9  .0000E+00   10  .0000E+00   11  .0000E+00   12  .0000E+00   13  .0000E+00
14  .0000E+00   15  .0000E+00   16  .0000E+00
   17  .0000E+00   18  .0000E+00   19  .0000E+00   20  .0000E+00   21  .0000E+00
22  .0000E+00   23  .0000E+00   24  .0000E+00
```

*** MODELOPTs: RegDFAULT CONC ELEV URBAN ADJ_U*

* SOURCE EMISSION RATE SCALARS WHICH VARY DIURNALLY AND BY DAY OF WEEK (HRDOW) *

SOURCE ID = L0003760 ; SOURCE TYPE = VOLUME :

HOUR	SCALAR	HOUR	SCALAR	HOUR	SCALAR	HOUR	SCALAR	HOUR	SCALAR	HOUR	SCALAR	HOUR	SCALAR	HOUR	SCALAR

DAY OF WEEK = WEEKDAY

1	.0000E+00	2	.0000E+00	3	.0000E+00	4	.0000E+00	5	.0000E+00	6	.0000E+00	7	.1000E+01	8	.1000E+01
9	.1000E+01	10	.1000E+01	11	.1000E+01	12	.1000E+01	13	.1000E+01	14	.1000E+01	15	.1000E+01	16	.1000E+01
17	.0000E+00	18	.0000E+00	19	.0000E+00	20	.0000E+00	21	.0000E+00	22	.0000E+00	23	.0000E+00	24	.0000E+00

DAY OF WEEK = SATURDAY

1	.0000E+00	2	.0000E+00	3	.0000E+00	4	.0000E+00	5	.0000E+00	6	.0000E+00	7	.0000E+00	8	.0000E+00
9	.0000E+00	10	.0000E+00	11	.0000E+00	12	.0000E+00	13	.0000E+00	14	.0000E+00	15	.0000E+00	16	.0000E+00
17	.0000E+00	18	.0000E+00	19	.0000E+00	20	.0000E+00	21	.0000E+00	22	.0000E+00	23	.0000E+00	24	.0000E+00

DAY OF WEEK = SUNDAY

1	.0000E+00	2	.0000E+00	3	.0000E+00	4	.0000E+00	5	.0000E+00	6	.0000E+00	7	.0000E+00	8	.0000E+00
9	.0000E+00	10	.0000E+00	11	.0000E+00	12	.0000E+00	13	.0000E+00	14	.0000E+00	15	.0000E+00	16	.0000E+00
17	.0000E+00	18	.0000E+00	19	.0000E+00	20	.0000E+00	21	.0000E+00	22	.0000E+00	23	.0000E+00	24	.0000E+00

```
 *** AERMOD - VERSION 22112  ***   *** C:\Lakes\Project Files\Garvey\Garvey.isc
***        03/04/24
 *** AERMET - VERSION  16216 ***   ***
***        13:00:54

PAGE 361
 *** MODELOPTs:    RegDFAULT  CONC  ELEV  URBAN  ADJ_U*

                   * SOURCE EMISSION RATE SCALARS WHICH VARY DIURNALLY AND BY DAY
OF WEEK (HRDOW) *

 SOURCE ID = L0003761     ; SOURCE TYPE = VOLUME   :
  HOUR   SCALAR   HOUR   SCALAR   HOUR   SCALAR   HOUR   SCALAR   HOUR   SCALAR
HOUR   SCALAR   HOUR   SCALAR   HOUR   SCALAR
 - - - - - - - - - - - - - - - - - - - - - - - - - - - - - - - - - - - - - - - -
- - - - - - - - - - - - - - - - - - - - - - - - -
                                                DAY OF WEEK = WEEKDAY
    1  .0000E+00    2  .0000E+00    3  .0000E+00    4  .0000E+00    5  .0000E+00
6  .0000E+00    7  .1000E+01    8  .1000E+01
    9  .1000E+01   10  .1000E+01   11  .1000E+01   12  .1000E+01   13  .1000E+01
14  .1000E+01   15  .1000E+01   16  .1000E+01
   17  .0000E+00   18  .0000E+00   19  .0000E+00   20  .0000E+00   21  .0000E+00
22  .0000E+00   23  .0000E+00   24  .0000E+00
                                                DAY OF WEEK = SATURDAY
    1  .0000E+00    2  .0000E+00    3  .0000E+00    4  .0000E+00    5  .0000E+00
6  .0000E+00    7  .0000E+00    8  .0000E+00
    9  .0000E+00   10  .0000E+00   11  .0000E+00   12  .0000E+00   13  .0000E+00
14  .0000E+00   15  .0000E+00   16  .0000E+00
   17  .0000E+00   18  .0000E+00   19  .0000E+00   20  .0000E+00   21  .0000E+00
22  .0000E+00   23  .0000E+00   24  .0000E+00
                                                DAY OF WEEK = SUNDAY
    1  .0000E+00    2  .0000E+00    3  .0000E+00    4  .0000E+00    5  .0000E+00
6  .0000E+00    7  .0000E+00    8  .0000E+00
    9  .0000E+00   10  .0000E+00   11  .0000E+00   12  .0000E+00   13  .0000E+00
14  .0000E+00   15  .0000E+00   16  .0000E+00
   17  .0000E+00   18  .0000E+00   19  .0000E+00   20  .0000E+00   21  .0000E+00
22  .0000E+00   23  .0000E+00   24  .0000E+00
```

```
 *** AERMOD - VERSION 22112  ***   *** C:\Lakes\Project Files\Garvey\Garvey.isc
***        03/04/24
 *** AERMET - VERSION  16216 ***   ***
***        13:00:54

PAGE 362
 *** MODELOPTs:    RegDFAULT  CONC  ELEV  URBAN  ADJ_U*

                   * SOURCE EMISSION RATE SCALARS WHICH VARY DIURNALLY AND BY DAY
OF WEEK (HRDOW) *

 SOURCE ID = L0003762     ; SOURCE TYPE = VOLUME   :
  HOUR   SCALAR   HOUR   SCALAR   HOUR   SCALAR   HOUR   SCALAR   HOUR   SCALAR
HOUR   SCALAR   HOUR   SCALAR   HOUR   SCALAR
 - - - - - - - - - - - - - - - - - - - - - - - - - - - - - - - - - - - - - - - -
- - - - - - - - - - - - - - - - - - - - - - - - -
                                                DAY OF WEEK = WEEKDAY
    1  .0000E+00    2  .0000E+00    3  .0000E+00    4  .0000E+00    5  .0000E+00
6  .0000E+00    7  .1000E+01    8  .1000E+01
    9  .1000E+01   10  .1000E+01   11  .1000E+01   12  .1000E+01   13  .1000E+01
14  .1000E+01   15  .1000E+01   16  .1000E+01
   17  .0000E+00   18  .0000E+00   19  .0000E+00   20  .0000E+00   21  .0000E+00
22  .0000E+00   23  .0000E+00   24  .0000E+00
                                                DAY OF WEEK = SATURDAY
    1  .0000E+00    2  .0000E+00    3  .0000E+00    4  .0000E+00    5  .0000E+00
6  .0000E+00    7  .0000E+00    8  .0000E+00
    9  .0000E+00   10  .0000E+00   11  .0000E+00   12  .0000E+00   13  .0000E+00
14  .0000E+00   15  .0000E+00   16  .0000E+00
   17  .0000E+00   18  .0000E+00   19  .0000E+00   20  .0000E+00   21  .0000E+00
22  .0000E+00   23  .0000E+00   24  .0000E+00
                                                DAY OF WEEK = SUNDAY
    1  .0000E+00    2  .0000E+00    3  .0000E+00    4  .0000E+00    5  .0000E+00
6  .0000E+00    7  .0000E+00    8  .0000E+00
    9  .0000E+00   10  .0000E+00   11  .0000E+00   12  .0000E+00   13  .0000E+00
14  .0000E+00   15  .0000E+00   16  .0000E+00
   17  .0000E+00   18  .0000E+00   19  .0000E+00   20  .0000E+00   21  .0000E+00
22  .0000E+00   23  .0000E+00   24  .0000E+00
```

```
 *** AERMOD - VERSION 22112  ***   *** C:\Lakes\Project Files\Garvey\Garvey.isc
***        03/04/24
 *** AERMET - VERSION  16216 ***   ***
***        13:00:54

PAGE 363
 *** MODELOPTs:    RegDFAULT  CONC  ELEV  URBAN  ADJ_U*

                   * SOURCE EMISSION RATE SCALARS WHICH VARY DIURNALLY AND BY DAY
OF WEEK (HRDOW) *

 SOURCE ID = L0003763     ; SOURCE TYPE = VOLUME   :
  HOUR   SCALAR   HOUR   SCALAR   HOUR   SCALAR   HOUR   SCALAR   HOUR   SCALAR
HOUR   SCALAR   HOUR   SCALAR   HOUR   SCALAR
 - - - - - - - - - - - - - - - - - - - - - - - - - - - - - - - - - - - - - - - -
- - - - - - - - - - - - - - - - - - - - - - - - -
                                                DAY OF WEEK = WEEKDAY
    1  .0000E+00    2  .0000E+00    3  .0000E+00    4  .0000E+00    5  .0000E+00
6  .0000E+00    7  .1000E+01    8  .1000E+01
    9  .1000E+01   10  .1000E+01   11  .1000E+01   12  .1000E+01   13  .1000E+01
14  .1000E+01   15  .1000E+01   16  .1000E+01
   17  .0000E+00   18  .0000E+00   19  .0000E+00   20  .0000E+00   21  .0000E+00
22  .0000E+00   23  .0000E+00   24  .0000E+00
                                                DAY OF WEEK = SATURDAY
    1  .0000E+00    2  .0000E+00    3  .0000E+00    4  .0000E+00    5  .0000E+00
6  .0000E+00    7  .0000E+00    8  .0000E+00
    9  .0000E+00   10  .0000E+00   11  .0000E+00   12  .0000E+00   13  .0000E+00
14  .0000E+00   15  .0000E+00   16  .0000E+00
   17  .0000E+00   18  .0000E+00   19  .0000E+00   20  .0000E+00   21  .0000E+00
22  .0000E+00   23  .0000E+00   24  .0000E+00
                                                DAY OF WEEK = SUNDAY
    1  .0000E+00    2  .0000E+00    3  .0000E+00    4  .0000E+00    5  .0000E+00
6  .0000E+00    7  .0000E+00    8  .0000E+00
    9  .0000E+00   10  .0000E+00   11  .0000E+00   12  .0000E+00   13  .0000E+00
14  .0000E+00   15  .0000E+00   16  .0000E+00
   17  .0000E+00   18  .0000E+00   19  .0000E+00   20  .0000E+00   21  .0000E+00
22  .0000E+00   23  .0000E+00   24  .0000E+00
```

```
 *** AERMOD - VERSION 22112  ***   *** C:\Lakes\Project Files\Garvey\Garvey.isc
***        03/04/24
 *** AERMET - VERSION  16216 ***   ***
***        13:00:54

PAGE 364
 *** MODELOPTs:    RegDFAULT  CONC  ELEV  URBAN  ADJ_U*

                   * SOURCE EMISSION RATE SCALARS WHICH VARY DIURNALLY AND BY DAY
OF WEEK (HRDOW) *

 SOURCE ID = L0003764     ; SOURCE TYPE = VOLUME   :
  HOUR   SCALAR   HOUR   SCALAR   HOUR   SCALAR   HOUR   SCALAR   HOUR   SCALAR
HOUR   SCALAR   HOUR   SCALAR   HOUR   SCALAR
 - - - - - - - - - - - - - - - - - - - - - - - - - - - - - - - - - - - - - - - -
- - - - - - - - - - - - - - - - - - - - - - - - -
                                                DAY OF WEEK = WEEKDAY
    1  .0000E+00    2  .0000E+00    3  .0000E+00    4  .0000E+00    5  .0000E+00
6  .0000E+00    7  .1000E+01    8  .1000E+01
    9  .1000E+01   10  .1000E+01   11  .1000E+01   12  .1000E+01   13  .1000E+01
14  .1000E+01   15  .1000E+01   16  .1000E+01
   17  .0000E+00   18  .0000E+00   19  .0000E+00   20  .0000E+00   21  .0000E+00
22  .0000E+00   23  .0000E+00   24  .0000E+00
                                                DAY OF WEEK = SATURDAY
    1  .0000E+00    2  .0000E+00    3  .0000E+00    4  .0000E+00    5  .0000E+00
6  .0000E+00    7  .0000E+00    8  .0000E+00
    9  .0000E+00   10  .0000E+00   11  .0000E+00   12  .0000E+00   13  .0000E+00
14  .0000E+00   15  .0000E+00   16  .0000E+00
   17  .0000E+00   18  .0000E+00   19  .0000E+00   20  .0000E+00   21  .0000E+00
22  .0000E+00   23  .0000E+00   24  .0000E+00
                                                DAY OF WEEK = SUNDAY
    1  .0000E+00    2  .0000E+00    3  .0000E+00    4  .0000E+00    5  .0000E+00
6  .0000E+00    7  .0000E+00    8  .0000E+00
    9  .0000E+00   10  .0000E+00   11  .0000E+00   12  .0000E+00   13  .0000E+00
14  .0000E+00   15  .0000E+00   16  .0000E+00
   17  .0000E+00   18  .0000E+00   19  .0000E+00   20  .0000E+00   21  .0000E+00
22  .0000E+00   23  .0000E+00   24  .0000E+00
```

*** MODELOPTs: RegDFAULT CONC ELEV URBAN ADJ_U*

* SOURCE EMISSION RATE SCALARS WHICH VARY DIURNALLY AND BY DAY OF WEEK (HRDOW) *

SOURCE ID = L0003765 ; SOURCE TYPE = VOLUME :

HOUR	SCALAR	HOUR	SCALAR	HOUR	SCALAR	HOUR	SCALAR	HOUR	SCALAR	HOUR	SCALAR	HOUR	SCALAR	HOUR	SCALAR

DAY OF WEEK = WEEKDAY

1	.0000E+00	2	.0000E+00	3	.0000E+00	4	.0000E+00	5	.0000E+00	6	.0000E+00	7	.1000E+01	8	.1000E+01
9	.1000E+01	10	.1000E+01	11	.1000E+01	12	.1000E+01	13	.1000E+01	14	.1000E+01	15	.1000E+01	16	.1000E+01
17	.0000E+00	18	.0000E+00	19	.0000E+00	20	.0000E+00	21	.0000E+00	22	.0000E+00	23	.0000E+00	24	.0000E+00

DAY OF WEEK = SATURDAY

1	.0000E+00	2	.0000E+00	3	.0000E+00	4	.0000E+00	5	.0000E+00	6	.0000E+00	7	.0000E+00	8	.0000E+00
9	.0000E+00	10	.0000E+00	11	.0000E+00	12	.0000E+00	13	.0000E+00	14	.0000E+00	15	.0000E+00	16	.0000E+00
17	.0000E+00	18	.0000E+00	19	.0000E+00	20	.0000E+00	21	.0000E+00	22	.0000E+00	23	.0000E+00	24	.0000E+00

DAY OF WEEK = SUNDAY

1	.0000E+00	2	.0000E+00	3	.0000E+00	4	.0000E+00	5	.0000E+00	6	.0000E+00	7	.0000E+00	8	.0000E+00
9	.0000E+00	10	.0000E+00	11	.0000E+00	12	.0000E+00	13	.0000E+00	14	.0000E+00	15	.0000E+00	16	.0000E+00
17	.0000E+00	18	.0000E+00	19	.0000E+00	20	.0000E+00	21	.0000E+00	22	.0000E+00	23	.0000E+00	24	.0000E+00

```
 *** AERMOD - VERSION 22112  ***   *** C:\Lakes\Project Files\Garvey\Garvey.isc
***        03/04/24
 *** AERMET - VERSION  16216 ***   ***
***        13:00:54

PAGE 366
 *** MODELOPTs:    RegDFAULT  CONC  ELEV  URBAN  ADJ_U*

                   * SOURCE EMISSION RATE SCALARS WHICH VARY DIURNALLY AND BY DAY
OF WEEK (HRDOW) *

 SOURCE ID = L0003766     ; SOURCE TYPE = VOLUME   :
  HOUR   SCALAR   HOUR   SCALAR   HOUR   SCALAR   HOUR   SCALAR   HOUR   SCALAR
HOUR   SCALAR   HOUR   SCALAR   HOUR   SCALAR
 - - - - - - - - - - - - - - - - - - - - - - - - - - - - - - - - - - - - - - - -
- - - - - - - - - - - - - - - - - - - - - - - - -
                                                DAY OF WEEK = WEEKDAY
    1  .0000E+00    2  .0000E+00    3  .0000E+00    4  .0000E+00    5  .0000E+00
6  .0000E+00    7  .1000E+01    8  .1000E+01
    9  .1000E+01   10  .1000E+01   11  .1000E+01   12  .1000E+01   13  .1000E+01
14  .1000E+01   15  .1000E+01   16  .1000E+01
   17  .0000E+00   18  .0000E+00   19  .0000E+00   20  .0000E+00   21  .0000E+00
22  .0000E+00   23  .0000E+00   24  .0000E+00
                                                DAY OF WEEK = SATURDAY
    1  .0000E+00    2  .0000E+00    3  .0000E+00    4  .0000E+00    5  .0000E+00
6  .0000E+00    7  .0000E+00    8  .0000E+00
    9  .0000E+00   10  .0000E+00   11  .0000E+00   12  .0000E+00   13  .0000E+00
14  .0000E+00   15  .0000E+00   16  .0000E+00
   17  .0000E+00   18  .0000E+00   19  .0000E+00   20  .0000E+00   21  .0000E+00
22  .0000E+00   23  .0000E+00   24  .0000E+00
                                                DAY OF WEEK = SUNDAY
    1  .0000E+00    2  .0000E+00    3  .0000E+00    4  .0000E+00    5  .0000E+00
6  .0000E+00    7  .0000E+00    8  .0000E+00
    9  .0000E+00   10  .0000E+00   11  .0000E+00   12  .0000E+00   13  .0000E+00
14  .0000E+00   15  .0000E+00   16  .0000E+00
   17  .0000E+00   18  .0000E+00   19  .0000E+00   20  .0000E+00   21  .0000E+00
22  .0000E+00   23  .0000E+00   24  .0000E+00
```

```
 *** AERMOD - VERSION 22112  ***   *** C:\Lakes\Project Files\Garvey\Garvey.isc
***        03/04/24
 *** AERMET - VERSION  16216 ***   ***
***        13:00:54

PAGE 367
 *** MODELOPTs:    RegDFAULT  CONC  ELEV  URBAN  ADJ_U*

                   * SOURCE EMISSION RATE SCALARS WHICH VARY DIURNALLY AND BY DAY
OF WEEK (HRDOW) *

 SOURCE ID = L0003767     ; SOURCE TYPE = VOLUME   :
  HOUR   SCALAR   HOUR   SCALAR   HOUR   SCALAR   HOUR   SCALAR   HOUR   SCALAR
HOUR   SCALAR   HOUR   SCALAR   HOUR   SCALAR
 - - - - - - - - - - - - - - - - - - - - - - - - - - - - - - - - - - - - - - - -
- - - - - - - - - - - - - - - - - - - - - - - - -
                                                DAY OF WEEK = WEEKDAY
    1  .0000E+00    2  .0000E+00    3  .0000E+00    4  .0000E+00    5  .0000E+00
6  .0000E+00    7  .1000E+01    8  .1000E+01
    9  .1000E+01   10  .1000E+01   11  .1000E+01   12  .1000E+01   13  .1000E+01
14  .1000E+01   15  .1000E+01   16  .1000E+01
   17  .0000E+00   18  .0000E+00   19  .0000E+00   20  .0000E+00   21  .0000E+00
22  .0000E+00   23  .0000E+00   24  .0000E+00
                                                DAY OF WEEK = SATURDAY
    1  .0000E+00    2  .0000E+00    3  .0000E+00    4  .0000E+00    5  .0000E+00
6  .0000E+00    7  .0000E+00    8  .0000E+00
    9  .0000E+00   10  .0000E+00   11  .0000E+00   12  .0000E+00   13  .0000E+00
14  .0000E+00   15  .0000E+00   16  .0000E+00
   17  .0000E+00   18  .0000E+00   19  .0000E+00   20  .0000E+00   21  .0000E+00
22  .0000E+00   23  .0000E+00   24  .0000E+00
                                                DAY OF WEEK = SUNDAY
    1  .0000E+00    2  .0000E+00    3  .0000E+00    4  .0000E+00    5  .0000E+00
6  .0000E+00    7  .0000E+00    8  .0000E+00
    9  .0000E+00   10  .0000E+00   11  .0000E+00   12  .0000E+00   13  .0000E+00
14  .0000E+00   15  .0000E+00   16  .0000E+00
   17  .0000E+00   18  .0000E+00   19  .0000E+00   20  .0000E+00   21  .0000E+00
22  .0000E+00   23  .0000E+00   24  .0000E+00
```

```
 *** AERMOD - VERSION 22112  ***   *** C:\Lakes\Project Files\Garvey\Garvey.isc
***        03/04/24
 *** AERMET - VERSION  16216 ***   ***
***        13:00:54

PAGE 368
 *** MODELOPTs:    RegDFAULT  CONC  ELEV  URBAN  ADJ_U*

                   * SOURCE EMISSION RATE SCALARS WHICH VARY DIURNALLY AND BY DAY
OF WEEK (HRDOW) *

 SOURCE ID = L0003768     ; SOURCE TYPE = VOLUME   :
  HOUR   SCALAR   HOUR   SCALAR   HOUR   SCALAR   HOUR   SCALAR   HOUR   SCALAR
HOUR   SCALAR   HOUR   SCALAR   HOUR   SCALAR
 - - - - - - - - - - - - - - - - - - - - - - - - - - - - - - - - - - - - - - - -
- - - - - - - - - - - - - - - - - - - - - - - - -
                                                DAY OF WEEK = WEEKDAY
    1  .0000E+00    2  .0000E+00    3  .0000E+00    4  .0000E+00    5  .0000E+00
6  .0000E+00    7  .1000E+01    8  .1000E+01
    9  .1000E+01   10  .1000E+01   11  .1000E+01   12  .1000E+01   13  .1000E+01
14  .1000E+01   15  .1000E+01   16  .1000E+01
   17  .0000E+00   18  .0000E+00   19  .0000E+00   20  .0000E+00   21  .0000E+00
22  .0000E+00   23  .0000E+00   24  .0000E+00
                                                DAY OF WEEK = SATURDAY
    1  .0000E+00    2  .0000E+00    3  .0000E+00    4  .0000E+00    5  .0000E+00
6  .0000E+00    7  .0000E+00    8  .0000E+00
    9  .0000E+00   10  .0000E+00   11  .0000E+00   12  .0000E+00   13  .0000E+00
14  .0000E+00   15  .0000E+00   16  .0000E+00
   17  .0000E+00   18  .0000E+00   19  .0000E+00   20  .0000E+00   21  .0000E+00
22  .0000E+00   23  .0000E+00   24  .0000E+00
                                                DAY OF WEEK = SUNDAY
    1  .0000E+00    2  .0000E+00    3  .0000E+00    4  .0000E+00    5  .0000E+00
6  .0000E+00    7  .0000E+00    8  .0000E+00
    9  .0000E+00   10  .0000E+00   11  .0000E+00   12  .0000E+00   13  .0000E+00
14  .0000E+00   15  .0000E+00   16  .0000E+00
   17  .0000E+00   18  .0000E+00   19  .0000E+00   20  .0000E+00   21  .0000E+00
22  .0000E+00   23  .0000E+00   24  .0000E+00
```

*** MODELOPTs: RegDFAULT CONC ELEV URBAN ADJ_U*

* SOURCE EMISSION RATE SCALARS WHICH VARY DIURNALLY AND BY DAY OF WEEK (HRDOW) *

SOURCE ID = L0002339 ; SOURCE TYPE = VOLUME :

HOUR	SCALAR	HOUR	SCALAR	HOUR	SCALAR	HOUR	SCALAR	HOUR	SCALAR	HOUR	SCALAR	HOUR	SCALAR	HOUR	SCALAR

DAY OF WEEK = WEEKDAY

1	.0000E+00	2	.0000E+00	3	.0000E+00	4	.0000E+00	5	.0000E+00	6	.0000E+00	7	.1000E+01	8	.1000E+01
9	.1000E+01	10	.1000E+01	11	.1000E+01	12	.1000E+01	13	.1000E+01	14	.1000E+01	15	.1000E+01	16	.1000E+01
17	.0000E+00	18	.0000E+00	19	.0000E+00	20	.0000E+00	21	.0000E+00	22	.0000E+00	23	.0000E+00	24	.0000E+00

DAY OF WEEK = SATURDAY

1	.0000E+00	2	.0000E+00	3	.0000E+00	4	.0000E+00	5	.0000E+00	6	.0000E+00	7	.0000E+00	8	.0000E+00
9	.0000E+00	10	.0000E+00	11	.0000E+00	12	.0000E+00	13	.0000E+00	14	.0000E+00	15	.0000E+00	16	.0000E+00
17	.0000E+00	18	.0000E+00	19	.0000E+00	20	.0000E+00	21	.0000E+00	22	.0000E+00	23	.0000E+00	24	.0000E+00

DAY OF WEEK = SUNDAY

1	.0000E+00	2	.0000E+00	3	.0000E+00	4	.0000E+00	5	.0000E+00	6	.0000E+00	7	.0000E+00	8	.0000E+00
9	.0000E+00	10	.0000E+00	11	.0000E+00	12	.0000E+00	13	.0000E+00	14	.0000E+00	15	.0000E+00	16	.0000E+00
17	.0000E+00	18	.0000E+00	19	.0000E+00	20	.0000E+00	21	.0000E+00	22	.0000E+00	23	.0000E+00	24	.0000E+00

```
 *** AERMOD - VERSION 22112  ***   *** C:\Lakes\Project Files\Garvey\Garvey.isc
***        03/04/24
 *** AERMET - VERSION  16216 ***   ***
***        13:00:54

PAGE 370
 *** MODELOPTs:    RegDFAULT  CONC  ELEV  URBAN  ADJ_U*

                   * SOURCE EMISSION RATE SCALARS WHICH VARY DIURNALLY AND BY DAY
OF WEEK (HRDOW) *

 SOURCE ID = L0002340     ; SOURCE TYPE = VOLUME   :
  HOUR   SCALAR   HOUR   SCALAR   HOUR   SCALAR   HOUR   SCALAR   HOUR   SCALAR
HOUR   SCALAR   HOUR   SCALAR   HOUR   SCALAR
 - - - - - - - - - - - - - - - - - - - - - - - - - - - - - - - - - - - - - - - -
- - - - - - - - - - - - - - - - - - - - - - - - -
                                                DAY OF WEEK = WEEKDAY
    1  .0000E+00    2  .0000E+00    3  .0000E+00    4  .0000E+00    5  .0000E+00
6  .0000E+00    7  .1000E+01    8  .1000E+01
    9  .1000E+01   10  .1000E+01   11  .1000E+01   12  .1000E+01   13  .1000E+01
14  .1000E+01   15  .1000E+01   16  .1000E+01
   17  .0000E+00   18  .0000E+00   19  .0000E+00   20  .0000E+00   21  .0000E+00
22  .0000E+00   23  .0000E+00   24  .0000E+00
                                                DAY OF WEEK = SATURDAY
    1  .0000E+00    2  .0000E+00    3  .0000E+00    4  .0000E+00    5  .0000E+00
6  .0000E+00    7  .0000E+00    8  .0000E+00
    9  .0000E+00   10  .0000E+00   11  .0000E+00   12  .0000E+00   13  .0000E+00
14  .0000E+00   15  .0000E+00   16  .0000E+00
   17  .0000E+00   18  .0000E+00   19  .0000E+00   20  .0000E+00   21  .0000E+00
22  .0000E+00   23  .0000E+00   24  .0000E+00
                                                DAY OF WEEK = SUNDAY
    1  .0000E+00    2  .0000E+00    3  .0000E+00    4  .0000E+00    5  .0000E+00
6  .0000E+00    7  .0000E+00    8  .0000E+00
    9  .0000E+00   10  .0000E+00   11  .0000E+00   12  .0000E+00   13  .0000E+00
14  .0000E+00   15  .0000E+00   16  .0000E+00
   17  .0000E+00   18  .0000E+00   19  .0000E+00   20  .0000E+00   21  .0000E+00
22  .0000E+00   23  .0000E+00   24  .0000E+00
```

*** MODELOPTs: RegDFAULT CONC ELEV URBAN ADJ_U*

* SOURCE EMISSION RATE SCALARS WHICH VARY DIURNALLY AND BY DAY OF WEEK (HRDOW) *

SOURCE ID = L0002341 ; SOURCE TYPE = VOLUME :

HOUR	SCALAR	HOUR	SCALAR	HOUR	SCALAR	HOUR	SCALAR	HOUR	SCALAR	HOUR	SCALAR	HOUR	SCALAR	HOUR	SCALAR

DAY OF WEEK = WEEKDAY

1	.0000E+00	2	.0000E+00	3	.0000E+00	4	.0000E+00	5	.0000E+00	6	.0000E+00	7	.1000E+01	8	.1000E+01
9	.1000E+01	10	.1000E+01	11	.1000E+01	12	.1000E+01	13	.1000E+01	14	.1000E+01	15	.1000E+01	16	.1000E+01
17	.0000E+00	18	.0000E+00	19	.0000E+00	20	.0000E+00	21	.0000E+00	22	.0000E+00	23	.0000E+00	24	.0000E+00

DAY OF WEEK = SATURDAY

1	.0000E+00	2	.0000E+00	3	.0000E+00	4	.0000E+00	5	.0000E+00	6	.0000E+00	7	.0000E+00	8	.0000E+00
9	.0000E+00	10	.0000E+00	11	.0000E+00	12	.0000E+00	13	.0000E+00	14	.0000E+00	15	.0000E+00	16	.0000E+00
17	.0000E+00	18	.0000E+00	19	.0000E+00	20	.0000E+00	21	.0000E+00	22	.0000E+00	23	.0000E+00	24	.0000E+00

DAY OF WEEK = SUNDAY

1	.0000E+00	2	.0000E+00	3	.0000E+00	4	.0000E+00	5	.0000E+00	6	.0000E+00	7	.0000E+00	8	.0000E+00
9	.0000E+00	10	.0000E+00	11	.0000E+00	12	.0000E+00	13	.0000E+00	14	.0000E+00	15	.0000E+00	16	.0000E+00
17	.0000E+00	18	.0000E+00	19	.0000E+00	20	.0000E+00	21	.0000E+00	22	.0000E+00	23	.0000E+00	24	.0000E+00

*** MODELOPTs: RegDFAULT CONC ELEV URBAN ADJ_U*

* SOURCE EMISSION RATE SCALARS WHICH VARY DIURNALLY AND BY DAY OF WEEK (HRDOW) *

SOURCE ID = L0002342 ; SOURCE TYPE = VOLUME :

HOUR	SCALAR	HOUR	SCALAR	HOUR	SCALAR	HOUR	SCALAR	HOUR	SCALAR	HOUR	SCALAR	HOUR	SCALAR	HOUR	SCALAR

DAY OF WEEK = WEEKDAY

1	.0000E+00	2	.0000E+00	3	.0000E+00	4	.0000E+00	5	.0000E+00	6	.0000E+00	7	.1000E+01	8	.1000E+01
9	.1000E+01	10	.1000E+01	11	.1000E+01	12	.1000E+01	13	.1000E+01	14	.1000E+01	15	.1000E+01	16	.1000E+01
17	.0000E+00	18	.0000E+00	19	.0000E+00	20	.0000E+00	21	.0000E+00	22	.0000E+00	23	.0000E+00	24	.0000E+00

DAY OF WEEK = SATURDAY

1	.0000E+00	2	.0000E+00	3	.0000E+00	4	.0000E+00	5	.0000E+00	6	.0000E+00	7	.0000E+00	8	.0000E+00
9	.0000E+00	10	.0000E+00	11	.0000E+00	12	.0000E+00	13	.0000E+00	14	.0000E+00	15	.0000E+00	16	.0000E+00
17	.0000E+00	18	.0000E+00	19	.0000E+00	20	.0000E+00	21	.0000E+00	22	.0000E+00	23	.0000E+00	24	.0000E+00

DAY OF WEEK = SUNDAY

1	.0000E+00	2	.0000E+00	3	.0000E+00	4	.0000E+00	5	.0000E+00	6	.0000E+00	7	.0000E+00	8	.0000E+00
9	.0000E+00	10	.0000E+00	11	.0000E+00	12	.0000E+00	13	.0000E+00	14	.0000E+00	15	.0000E+00	16	.0000E+00
17	.0000E+00	18	.0000E+00	19	.0000E+00	20	.0000E+00	21	.0000E+00	22	.0000E+00	23	.0000E+00	24	.0000E+00

*** MODELOPTs: RegDFAULT CONC ELEV URBAN ADJ_U*

* SOURCE EMISSION RATE SCALARS WHICH VARY DIURNALLY AND BY DAY OF WEEK (HRDOW) *

SOURCE ID = L0002343 ; SOURCE TYPE = VOLUME :

HOUR	SCALAR	HOUR	SCALAR	HOUR	SCALAR	HOUR	SCALAR	HOUR	SCALAR	HOUR	SCALAR	HOUR	SCALAR	HOUR	SCALAR

DAY OF WEEK = WEEKDAY

1	.0000E+00	2	.0000E+00	3	.0000E+00	4	.0000E+00	5	.0000E+00	6	.0000E+00	7	.1000E+01	8	.1000E+01
9	.1000E+01	10	.1000E+01	11	.1000E+01	12	.1000E+01	13	.1000E+01	14	.1000E+01	15	.1000E+01	16	.1000E+01
17	.0000E+00	18	.0000E+00	19	.0000E+00	20	.0000E+00	21	.0000E+00	22	.0000E+00	23	.0000E+00	24	.0000E+00

DAY OF WEEK = SATURDAY

1	.0000E+00	2	.0000E+00	3	.0000E+00	4	.0000E+00	5	.0000E+00	6	.0000E+00	7	.0000E+00	8	.0000E+00
9	.0000E+00	10	.0000E+00	11	.0000E+00	12	.0000E+00	13	.0000E+00	14	.0000E+00	15	.0000E+00	16	.0000E+00
17	.0000E+00	18	.0000E+00	19	.0000E+00	20	.0000E+00	21	.0000E+00	22	.0000E+00	23	.0000E+00	24	.0000E+00

DAY OF WEEK = SUNDAY

1	.0000E+00	2	.0000E+00	3	.0000E+00	4	.0000E+00	5	.0000E+00	6	.0000E+00	7	.0000E+00	8	.0000E+00
9	.0000E+00	10	.0000E+00	11	.0000E+00	12	.0000E+00	13	.0000E+00	14	.0000E+00	15	.0000E+00	16	.0000E+00
17	.0000E+00	18	.0000E+00	19	.0000E+00	20	.0000E+00	21	.0000E+00	22	.0000E+00	23	.0000E+00	24	.0000E+00

*** MODELOPTs: RegDFAULT CONC ELEV URBAN ADJ_U*

* SOURCE EMISSION RATE SCALARS WHICH VARY DIURNALLY AND BY DAY OF WEEK (HRDOW) *

SOURCE ID = L0002344 ; SOURCE TYPE = VOLUME :

HOUR	SCALAR	HOUR	SCALAR	HOUR	SCALAR	HOUR	SCALAR	HOUR	SCALAR	HOUR	SCALAR	HOUR	SCALAR	HOUR	SCALAR

DAY OF WEEK = WEEKDAY

1	.0000E+00	2	.0000E+00	3	.0000E+00	4	.0000E+00	5	.0000E+00	6	.0000E+00	7	.1000E+01	8	.1000E+01
9	.1000E+01	10	.1000E+01	11	.1000E+01	12	.1000E+01	13	.1000E+01	14	.1000E+01	15	.1000E+01	16	.1000E+01
17	.0000E+00	18	.0000E+00	19	.0000E+00	20	.0000E+00	21	.0000E+00	22	.0000E+00	23	.0000E+00	24	.0000E+00

DAY OF WEEK = SATURDAY

1	.0000E+00	2	.0000E+00	3	.0000E+00	4	.0000E+00	5	.0000E+00	6	.0000E+00	7	.0000E+00	8	.0000E+00
9	.0000E+00	10	.0000E+00	11	.0000E+00	12	.0000E+00	13	.0000E+00	14	.0000E+00	15	.0000E+00	16	.0000E+00
17	.0000E+00	18	.0000E+00	19	.0000E+00	20	.0000E+00	21	.0000E+00	22	.0000E+00	23	.0000E+00	24	.0000E+00

DAY OF WEEK = SUNDAY

1	.0000E+00	2	.0000E+00	3	.0000E+00	4	.0000E+00	5	.0000E+00	6	.0000E+00	7	.0000E+00	8	.0000E+00
9	.0000E+00	10	.0000E+00	11	.0000E+00	12	.0000E+00	13	.0000E+00	14	.0000E+00	15	.0000E+00	16	.0000E+00
17	.0000E+00	18	.0000E+00	19	.0000E+00	20	.0000E+00	21	.0000E+00	22	.0000E+00	23	.0000E+00	24	.0000E+00

```
 *** AERMOD - VERSION 22112  ***   *** C:\Lakes\Project Files\Garvey\Garvey.isc
***        03/04/24
 *** AERMET - VERSION  16216 ***   ***
***        13:00:54

PAGE 375
 *** MODELOPTs:    RegDFAULT  CONC  ELEV  URBAN  ADJ_U*

                   * SOURCE EMISSION RATE SCALARS WHICH VARY DIURNALLY AND BY DAY
OF WEEK (HRDOW) *

 SOURCE ID = L0002345     ; SOURCE TYPE = VOLUME   :
  HOUR   SCALAR   HOUR   SCALAR   HOUR   SCALAR   HOUR   SCALAR   HOUR   SCALAR
HOUR   SCALAR   HOUR   SCALAR   HOUR   SCALAR
 - - - - - - - - - - - - - - - - - - - - - - - - - - - - - - - - - - - - - - - -
- - - - - - - - - - - - - - - - - - - - - - - - -
                                                DAY OF WEEK = WEEKDAY
    1  .0000E+00    2  .0000E+00    3  .0000E+00    4  .0000E+00    5  .0000E+00
6  .0000E+00    7  .1000E+01    8  .1000E+01
    9  .1000E+01   10  .1000E+01   11  .1000E+01   12  .1000E+01   13  .1000E+01
14  .1000E+01   15  .1000E+01   16  .1000E+01
   17  .0000E+00   18  .0000E+00   19  .0000E+00   20  .0000E+00   21  .0000E+00
22  .0000E+00   23  .0000E+00   24  .0000E+00
                                                DAY OF WEEK = SATURDAY
    1  .0000E+00    2  .0000E+00    3  .0000E+00    4  .0000E+00    5  .0000E+00
6  .0000E+00    7  .0000E+00    8  .0000E+00
    9  .0000E+00   10  .0000E+00   11  .0000E+00   12  .0000E+00   13  .0000E+00
14  .0000E+00   15  .0000E+00   16  .0000E+00
   17  .0000E+00   18  .0000E+00   19  .0000E+00   20  .0000E+00   21  .0000E+00
22  .0000E+00   23  .0000E+00   24  .0000E+00
                                                DAY OF WEEK = SUNDAY
    1  .0000E+00    2  .0000E+00    3  .0000E+00    4  .0000E+00    5  .0000E+00
6  .0000E+00    7  .0000E+00    8  .0000E+00
    9  .0000E+00   10  .0000E+00   11  .0000E+00   12  .0000E+00   13  .0000E+00
14  .0000E+00   15  .0000E+00   16  .0000E+00
   17  .0000E+00   18  .0000E+00   19  .0000E+00   20  .0000E+00   21  .0000E+00
22  .0000E+00   23  .0000E+00   24  .0000E+00
```

```
 *** AERMOD - VERSION 22112  ***   *** C:\Lakes\Project Files\Garvey\Garvey.isc
***        03/04/24
 *** AERMET - VERSION  16216 ***   ***
***        13:00:54

PAGE 376
 *** MODELOPTs:    RegDFAULT  CONC  ELEV  URBAN  ADJ_U*

                   * SOURCE EMISSION RATE SCALARS WHICH VARY DIURNALLY AND BY DAY
OF WEEK (HRDOW) *

 SOURCE ID = L0002346     ; SOURCE TYPE = VOLUME   :
  HOUR   SCALAR   HOUR   SCALAR   HOUR   SCALAR   HOUR   SCALAR   HOUR   SCALAR
HOUR   SCALAR   HOUR   SCALAR   HOUR   SCALAR
 - - - - - - - - - - - - - - - - - - - - - - - - - - - - - - - - - - - - - - - -
- - - - - - - - - - - - - - - - - - - - - - - - -
                                                DAY OF WEEK = WEEKDAY
    1  .0000E+00    2  .0000E+00    3  .0000E+00    4  .0000E+00    5  .0000E+00
6  .0000E+00    7  .1000E+01    8  .1000E+01
    9  .1000E+01   10  .1000E+01   11  .1000E+01   12  .1000E+01   13  .1000E+01
14  .1000E+01   15  .1000E+01   16  .1000E+01
   17  .0000E+00   18  .0000E+00   19  .0000E+00   20  .0000E+00   21  .0000E+00
22  .0000E+00   23  .0000E+00   24  .0000E+00
                                                DAY OF WEEK = SATURDAY
    1  .0000E+00    2  .0000E+00    3  .0000E+00    4  .0000E+00    5  .0000E+00
6  .0000E+00    7  .0000E+00    8  .0000E+00
    9  .0000E+00   10  .0000E+00   11  .0000E+00   12  .0000E+00   13  .0000E+00
14  .0000E+00   15  .0000E+00   16  .0000E+00
   17  .0000E+00   18  .0000E+00   19  .0000E+00   20  .0000E+00   21  .0000E+00
22  .0000E+00   23  .0000E+00   24  .0000E+00
                                                DAY OF WEEK = SUNDAY
    1  .0000E+00    2  .0000E+00    3  .0000E+00    4  .0000E+00    5  .0000E+00
6  .0000E+00    7  .0000E+00    8  .0000E+00
    9  .0000E+00   10  .0000E+00   11  .0000E+00   12  .0000E+00   13  .0000E+00
14  .0000E+00   15  .0000E+00   16  .0000E+00
   17  .0000E+00   18  .0000E+00   19  .0000E+00   20  .0000E+00   21  .0000E+00
22  .0000E+00   23  .0000E+00   24  .0000E+00
```

```
 *** AERMOD - VERSION 22112  ***   *** C:\Lakes\Project Files\Garvey\Garvey.isc
***        03/04/24
 *** AERMET - VERSION  16216 ***   ***
***        13:00:54

PAGE 377
 *** MODELOPTs:    RegDFAULT  CONC  ELEV  URBAN  ADJ_U*

                   * SOURCE EMISSION RATE SCALARS WHICH VARY DIURNALLY AND BY DAY
OF WEEK (HRDOW) *

 SOURCE ID = L0002347     ; SOURCE TYPE = VOLUME   :
  HOUR   SCALAR   HOUR   SCALAR   HOUR   SCALAR   HOUR   SCALAR   HOUR   SCALAR
HOUR   SCALAR   HOUR   SCALAR   HOUR   SCALAR
 - - - - - - - - - - - - - - - - - - - - - - - - - - - - - - - - - - - - - - - -
- - - - - - - - - - - - - - - - - - - - - - - - -
                                                DAY OF WEEK = WEEKDAY
    1  .0000E+00    2  .0000E+00    3  .0000E+00    4  .0000E+00    5  .0000E+00
6  .0000E+00    7  .1000E+01    8  .1000E+01
    9  .1000E+01   10  .1000E+01   11  .1000E+01   12  .1000E+01   13  .1000E+01
14  .1000E+01   15  .1000E+01   16  .1000E+01
   17  .0000E+00   18  .0000E+00   19  .0000E+00   20  .0000E+00   21  .0000E+00
22  .0000E+00   23  .0000E+00   24  .0000E+00
                                                DAY OF WEEK = SATURDAY
    1  .0000E+00    2  .0000E+00    3  .0000E+00    4  .0000E+00    5  .0000E+00
6  .0000E+00    7  .0000E+00    8  .0000E+00
    9  .0000E+00   10  .0000E+00   11  .0000E+00   12  .0000E+00   13  .0000E+00
14  .0000E+00   15  .0000E+00   16  .0000E+00
   17  .0000E+00   18  .0000E+00   19  .0000E+00   20  .0000E+00   21  .0000E+00
22  .0000E+00   23  .0000E+00   24  .0000E+00
                                                DAY OF WEEK = SUNDAY
    1  .0000E+00    2  .0000E+00    3  .0000E+00    4  .0000E+00    5  .0000E+00
6  .0000E+00    7  .0000E+00    8  .0000E+00
    9  .0000E+00   10  .0000E+00   11  .0000E+00   12  .0000E+00   13  .0000E+00
14  .0000E+00   15  .0000E+00   16  .0000E+00
   17  .0000E+00   18  .0000E+00   19  .0000E+00   20  .0000E+00   21  .0000E+00
22  .0000E+00   23  .0000E+00   24  .0000E+00
```

```
 *** AERMOD - VERSION 22112  ***   *** C:\Lakes\Project Files\Garvey\Garvey.isc
***        03/04/24
 *** AERMET - VERSION  16216 ***   ***
***        13:00:54

PAGE 378
 *** MODELOPTs:    RegDFAULT  CONC  ELEV  URBAN  ADJ_U*

                   * SOURCE EMISSION RATE SCALARS WHICH VARY DIURNALLY AND BY DAY
OF WEEK (HRDOW) *

 SOURCE ID = L0002348     ; SOURCE TYPE = VOLUME   :
  HOUR   SCALAR   HOUR   SCALAR   HOUR   SCALAR   HOUR   SCALAR   HOUR   SCALAR
HOUR   SCALAR   HOUR   SCALAR   HOUR   SCALAR
 - - - - - - - - - - - - - - - - - - - - - - - - - - - - - - - - - - - - - - - -
- - - - - - - - - - - - - - - - - - - - - - - - -
                                                DAY OF WEEK = WEEKDAY
    1  .0000E+00    2  .0000E+00    3  .0000E+00    4  .0000E+00    5  .0000E+00
6  .0000E+00    7  .1000E+01    8  .1000E+01
    9  .1000E+01   10  .1000E+01   11  .1000E+01   12  .1000E+01   13  .1000E+01
14  .1000E+01   15  .1000E+01   16  .1000E+01
   17  .0000E+00   18  .0000E+00   19  .0000E+00   20  .0000E+00   21  .0000E+00
22  .0000E+00   23  .0000E+00   24  .0000E+00
                                                DAY OF WEEK = SATURDAY
    1  .0000E+00    2  .0000E+00    3  .0000E+00    4  .0000E+00    5  .0000E+00
6  .0000E+00    7  .0000E+00    8  .0000E+00
    9  .0000E+00   10  .0000E+00   11  .0000E+00   12  .0000E+00   13  .0000E+00
14  .0000E+00   15  .0000E+00   16  .0000E+00
   17  .0000E+00   18  .0000E+00   19  .0000E+00   20  .0000E+00   21  .0000E+00
22  .0000E+00   23  .0000E+00   24  .0000E+00
                                                DAY OF WEEK = SUNDAY
    1  .0000E+00    2  .0000E+00    3  .0000E+00    4  .0000E+00    5  .0000E+00
6  .0000E+00    7  .0000E+00    8  .0000E+00
    9  .0000E+00   10  .0000E+00   11  .0000E+00   12  .0000E+00   13  .0000E+00
14  .0000E+00   15  .0000E+00   16  .0000E+00
   17  .0000E+00   18  .0000E+00   19  .0000E+00   20  .0000E+00   21  .0000E+00
22  .0000E+00   23  .0000E+00   24  .0000E+00
```

*** MODELOPTs: RegDFAULT CONC ELEV URBAN ADJ_U*

* SOURCE EMISSION RATE SCALARS WHICH VARY DIURNALLY AND BY DAY OF WEEK (HRDOW) *

SOURCE ID = L0002349 ; SOURCE TYPE = VOLUME :

HOUR	SCALAR	HOUR	SCALAR	HOUR	SCALAR	HOUR	SCALAR	HOUR	SCALAR	HOUR	SCALAR	HOUR	SCALAR	HOUR	SCALAR

DAY OF WEEK = WEEKDAY

1	.0000E+00	2	.0000E+00	3	.0000E+00	4	.0000E+00	5	.0000E+00	6	.0000E+00	7	.1000E+01	8	.1000E+01
9	.1000E+01	10	.1000E+01	11	.1000E+01	12	.1000E+01	13	.1000E+01	14	.1000E+01	15	.1000E+01	16	.1000E+01
17	.0000E+00	18	.0000E+00	19	.0000E+00	20	.0000E+00	21	.0000E+00	22	.0000E+00	23	.0000E+00	24	.0000E+00

DAY OF WEEK = SATURDAY

1	.0000E+00	2	.0000E+00	3	.0000E+00	4	.0000E+00	5	.0000E+00	6	.0000E+00	7	.0000E+00	8	.0000E+00
9	.0000E+00	10	.0000E+00	11	.0000E+00	12	.0000E+00	13	.0000E+00	14	.0000E+00	15	.0000E+00	16	.0000E+00
17	.0000E+00	18	.0000E+00	19	.0000E+00	20	.0000E+00	21	.0000E+00	22	.0000E+00	23	.0000E+00	24	.0000E+00

DAY OF WEEK = SUNDAY

1	.0000E+00	2	.0000E+00	3	.0000E+00	4	.0000E+00	5	.0000E+00	6	.0000E+00	7	.0000E+00	8	.0000E+00
9	.0000E+00	10	.0000E+00	11	.0000E+00	12	.0000E+00	13	.0000E+00	14	.0000E+00	15	.0000E+00	16	.0000E+00
17	.0000E+00	18	.0000E+00	19	.0000E+00	20	.0000E+00	21	.0000E+00	22	.0000E+00	23	.0000E+00	24	.0000E+00

```
 *** AERMOD - VERSION 22112  ***   *** C:\Lakes\Project Files\Garvey\Garvey.isc
***        03/04/24
 *** AERMET - VERSION  16216 ***   ***
***        13:00:54

PAGE 380
 *** MODELOPTs:    RegDFAULT  CONC  ELEV  URBAN  ADJ_U*

                   * SOURCE EMISSION RATE SCALARS WHICH VARY DIURNALLY AND BY DAY
OF WEEK (HRDOW) *

 SOURCE ID = L0002350     ; SOURCE TYPE = VOLUME   :
  HOUR   SCALAR   HOUR   SCALAR   HOUR   SCALAR   HOUR   SCALAR   HOUR   SCALAR
HOUR   SCALAR   HOUR   SCALAR   HOUR   SCALAR
 - - - - - - - - - - - - - - - - - - - - - - - - - - - - - - - - - - - - - - - -
- - - - - - - - - - - - - - - - - - - - - - - - -
                                                DAY OF WEEK = WEEKDAY
    1  .0000E+00    2  .0000E+00    3  .0000E+00    4  .0000E+00    5  .0000E+00
6  .0000E+00    7  .1000E+01    8  .1000E+01
    9  .1000E+01   10  .1000E+01   11  .1000E+01   12  .1000E+01   13  .1000E+01
14  .1000E+01   15  .1000E+01   16  .1000E+01
   17  .0000E+00   18  .0000E+00   19  .0000E+00   20  .0000E+00   21  .0000E+00
22  .0000E+00   23  .0000E+00   24  .0000E+00
                                                DAY OF WEEK = SATURDAY
    1  .0000E+00    2  .0000E+00    3  .0000E+00    4  .0000E+00    5  .0000E+00
6  .0000E+00    7  .0000E+00    8  .0000E+00
    9  .0000E+00   10  .0000E+00   11  .0000E+00   12  .0000E+00   13  .0000E+00
14  .0000E+00   15  .0000E+00   16  .0000E+00
   17  .0000E+00   18  .0000E+00   19  .0000E+00   20  .0000E+00   21  .0000E+00
22  .0000E+00   23  .0000E+00   24  .0000E+00
                                                DAY OF WEEK = SUNDAY
    1  .0000E+00    2  .0000E+00    3  .0000E+00    4  .0000E+00    5  .0000E+00
6  .0000E+00    7  .0000E+00    8  .0000E+00
    9  .0000E+00   10  .0000E+00   11  .0000E+00   12  .0000E+00   13  .0000E+00
14  .0000E+00   15  .0000E+00   16  .0000E+00
   17  .0000E+00   18  .0000E+00   19  .0000E+00   20  .0000E+00   21  .0000E+00
22  .0000E+00   23  .0000E+00   24  .0000E+00
```

```
 *** AERMOD - VERSION 22112  ***   *** C:\Lakes\Project Files\Garvey\Garvey.isc
***        03/04/24
 *** AERMET - VERSION  16216 ***   ***
***        13:00:54

PAGE 381
 *** MODELOPTs:    RegDFAULT  CONC  ELEV  URBAN  ADJ_U*

                   * SOURCE EMISSION RATE SCALARS WHICH VARY DIURNALLY AND BY DAY
OF WEEK (HRDOW) *

 SOURCE ID = L0002351     ; SOURCE TYPE = VOLUME   :
  HOUR   SCALAR   HOUR   SCALAR   HOUR   SCALAR   HOUR   SCALAR   HOUR   SCALAR
HOUR   SCALAR   HOUR   SCALAR   HOUR   SCALAR
 - - - - - - - - - - - - - - - - - - - - - - - - - - - - - - - - - - - - - - - -
- - - - - - - - - - - - - - - - - - - - - - - - -
                                                DAY OF WEEK = WEEKDAY
    1  .0000E+00    2  .0000E+00    3  .0000E+00    4  .0000E+00    5  .0000E+00
6  .0000E+00    7  .1000E+01    8  .1000E+01
    9  .1000E+01   10  .1000E+01   11  .1000E+01   12  .1000E+01   13  .1000E+01
14  .1000E+01   15  .1000E+01   16  .1000E+01
   17  .0000E+00   18  .0000E+00   19  .0000E+00   20  .0000E+00   21  .0000E+00
22  .0000E+00   23  .0000E+00   24  .0000E+00
                                                DAY OF WEEK = SATURDAY
    1  .0000E+00    2  .0000E+00    3  .0000E+00    4  .0000E+00    5  .0000E+00
6  .0000E+00    7  .0000E+00    8  .0000E+00
    9  .0000E+00   10  .0000E+00   11  .0000E+00   12  .0000E+00   13  .0000E+00
14  .0000E+00   15  .0000E+00   16  .0000E+00
   17  .0000E+00   18  .0000E+00   19  .0000E+00   20  .0000E+00   21  .0000E+00
22  .0000E+00   23  .0000E+00   24  .0000E+00
                                                DAY OF WEEK = SUNDAY
    1  .0000E+00    2  .0000E+00    3  .0000E+00    4  .0000E+00    5  .0000E+00
6  .0000E+00    7  .0000E+00    8  .0000E+00
    9  .0000E+00   10  .0000E+00   11  .0000E+00   12  .0000E+00   13  .0000E+00
14  .0000E+00   15  .0000E+00   16  .0000E+00
   17  .0000E+00   18  .0000E+00   19  .0000E+00   20  .0000E+00   21  .0000E+00
22  .0000E+00   23  .0000E+00   24  .0000E+00
```

```
 *** AERMOD - VERSION 22112  ***   *** C:\Lakes\Project Files\Garvey\Garvey.isc
***        03/04/24
 *** AERMET - VERSION  16216 ***   ***
***        13:00:54

PAGE 382
 *** MODELOPTs:    RegDFAULT  CONC  ELEV  URBAN  ADJ_U*

                   * SOURCE EMISSION RATE SCALARS WHICH VARY DIURNALLY AND BY DAY
OF WEEK (HRDOW) *

 SOURCE ID = L0002352     ; SOURCE TYPE = VOLUME   :
  HOUR   SCALAR   HOUR   SCALAR   HOUR   SCALAR   HOUR   SCALAR   HOUR   SCALAR
HOUR   SCALAR   HOUR   SCALAR   HOUR   SCALAR
 - - - - - - - - - - - - - - - - - - - - - - - - - - - - - - - - - - - - - - - -
- - - - - - - - - - - - - - - - - - - - - - - - -
                                                DAY OF WEEK = WEEKDAY
    1  .0000E+00    2  .0000E+00    3  .0000E+00    4  .0000E+00    5  .0000E+00
6  .0000E+00    7  .1000E+01    8  .1000E+01
    9  .1000E+01   10  .1000E+01   11  .1000E+01   12  .1000E+01   13  .1000E+01
14  .1000E+01   15  .1000E+01   16  .1000E+01
   17  .0000E+00   18  .0000E+00   19  .0000E+00   20  .0000E+00   21  .0000E+00
22  .0000E+00   23  .0000E+00   24  .0000E+00
                                                DAY OF WEEK = SATURDAY
    1  .0000E+00    2  .0000E+00    3  .0000E+00    4  .0000E+00    5  .0000E+00
6  .0000E+00    7  .0000E+00    8  .0000E+00
    9  .0000E+00   10  .0000E+00   11  .0000E+00   12  .0000E+00   13  .0000E+00
14  .0000E+00   15  .0000E+00   16  .0000E+00
   17  .0000E+00   18  .0000E+00   19  .0000E+00   20  .0000E+00   21  .0000E+00
22  .0000E+00   23  .0000E+00   24  .0000E+00
                                                DAY OF WEEK = SUNDAY
    1  .0000E+00    2  .0000E+00    3  .0000E+00    4  .0000E+00    5  .0000E+00
6  .0000E+00    7  .0000E+00    8  .0000E+00
    9  .0000E+00   10  .0000E+00   11  .0000E+00   12  .0000E+00   13  .0000E+00
14  .0000E+00   15  .0000E+00   16  .0000E+00
   17  .0000E+00   18  .0000E+00   19  .0000E+00   20  .0000E+00   21  .0000E+00
22  .0000E+00   23  .0000E+00   24  .0000E+00
```

*** MODELOPTs: RegDFAULT CONC ELEV URBAN ADJ_U*

* SOURCE EMISSION RATE SCALARS WHICH VARY DIURNALLY AND BY DAY OF WEEK (HRDOW) *

SOURCE ID = L0002353 ; SOURCE TYPE = VOLUME :

HOUR	SCALAR	HOUR	SCALAR	HOUR	SCALAR	HOUR	SCALAR	HOUR	SCALAR	HOUR	SCALAR	HOUR	SCALAR	HOUR	SCALAR

DAY OF WEEK = WEEKDAY

1	.0000E+00	2	.0000E+00	3	.0000E+00	4	.0000E+00	5	.0000E+00	6	.0000E+00	7	.1000E+01	8	.1000E+01
9	.1000E+01	10	.1000E+01	11	.1000E+01	12	.1000E+01	13	.1000E+01	14	.1000E+01	15	.1000E+01	16	.1000E+01
17	.0000E+00	18	.0000E+00	19	.0000E+00	20	.0000E+00	21	.0000E+00	22	.0000E+00	23	.0000E+00	24	.0000E+00

DAY OF WEEK = SATURDAY

1	.0000E+00	2	.0000E+00	3	.0000E+00	4	.0000E+00	5	.0000E+00	6	.0000E+00	7	.0000E+00	8	.0000E+00
9	.0000E+00	10	.0000E+00	11	.0000E+00	12	.0000E+00	13	.0000E+00	14	.0000E+00	15	.0000E+00	16	.0000E+00
17	.0000E+00	18	.0000E+00	19	.0000E+00	20	.0000E+00	21	.0000E+00	22	.0000E+00	23	.0000E+00	24	.0000E+00

DAY OF WEEK = SUNDAY

1	.0000E+00	2	.0000E+00	3	.0000E+00	4	.0000E+00	5	.0000E+00	6	.0000E+00	7	.0000E+00	8	.0000E+00
9	.0000E+00	10	.0000E+00	11	.0000E+00	12	.0000E+00	13	.0000E+00	14	.0000E+00	15	.0000E+00	16	.0000E+00
17	.0000E+00	18	.0000E+00	19	.0000E+00	20	.0000E+00	21	.0000E+00	22	.0000E+00	23	.0000E+00	24	.0000E+00

```
 *** AERMOD - VERSION 22112  ***   *** C:\Lakes\Project Files\Garvey\Garvey.isc
***        03/04/24
 *** AERMET - VERSION  16216 ***   ***
***        13:00:54

PAGE 384
 *** MODELOPTs:    RegDFAULT  CONC  ELEV  URBAN  ADJ_U*

                   * SOURCE EMISSION RATE SCALARS WHICH VARY DIURNALLY AND BY DAY
OF WEEK (HRDOW) *

 SOURCE ID = L0002354     ; SOURCE TYPE = VOLUME   :
  HOUR   SCALAR   HOUR   SCALAR   HOUR   SCALAR   HOUR   SCALAR   HOUR   SCALAR
HOUR   SCALAR   HOUR   SCALAR   HOUR   SCALAR
 - - - - - - - - - - - - - - - - - - - - - - - - - - - - - - - - - - - - - - - -
- - - - - - - - - - - - - - - - - - - - - - - - -
                                                DAY OF WEEK = WEEKDAY
    1  .0000E+00    2  .0000E+00    3  .0000E+00    4  .0000E+00    5  .0000E+00
6  .0000E+00    7  .1000E+01    8  .1000E+01
    9  .1000E+01   10  .1000E+01   11  .1000E+01   12  .1000E+01   13  .1000E+01
14  .1000E+01   15  .1000E+01   16  .1000E+01
   17  .0000E+00   18  .0000E+00   19  .0000E+00   20  .0000E+00   21  .0000E+00
22  .0000E+00   23  .0000E+00   24  .0000E+00
                                                DAY OF WEEK = SATURDAY
    1  .0000E+00    2  .0000E+00    3  .0000E+00    4  .0000E+00    5  .0000E+00
6  .0000E+00    7  .0000E+00    8  .0000E+00
    9  .0000E+00   10  .0000E+00   11  .0000E+00   12  .0000E+00   13  .0000E+00
14  .0000E+00   15  .0000E+00   16  .0000E+00
   17  .0000E+00   18  .0000E+00   19  .0000E+00   20  .0000E+00   21  .0000E+00
22  .0000E+00   23  .0000E+00   24  .0000E+00
                                                DAY OF WEEK = SUNDAY
    1  .0000E+00    2  .0000E+00    3  .0000E+00    4  .0000E+00    5  .0000E+00
6  .0000E+00    7  .0000E+00    8  .0000E+00
    9  .0000E+00   10  .0000E+00   11  .0000E+00   12  .0000E+00   13  .0000E+00
14  .0000E+00   15  .0000E+00   16  .0000E+00
   17  .0000E+00   18  .0000E+00   19  .0000E+00   20  .0000E+00   21  .0000E+00
22  .0000E+00   23  .0000E+00   24  .0000E+00
```

```
 *** AERMOD - VERSION 22112  ***   *** C:\Lakes\Project Files\Garvey\Garvey.isc
***        03/04/24
 *** AERMET - VERSION  16216 ***   ***
***        13:00:54

PAGE 385
 *** MODELOPTs:    RegDFAULT  CONC  ELEV  URBAN  ADJ_U*

                   * SOURCE EMISSION RATE SCALARS WHICH VARY DIURNALLY AND BY DAY
OF WEEK (HRDOW) *

 SOURCE ID = L0002355     ; SOURCE TYPE = VOLUME   :
  HOUR   SCALAR   HOUR   SCALAR   HOUR   SCALAR   HOUR   SCALAR   HOUR   SCALAR
HOUR   SCALAR   HOUR   SCALAR   HOUR   SCALAR
 - - - - - - - - - - - - - - - - - - - - - - - - - - - - - - - - - - - - - - - -
- - - - - - - - - - - - - - - - - - - - - - - - -
                                                DAY OF WEEK = WEEKDAY
    1  .0000E+00    2  .0000E+00    3  .0000E+00    4  .0000E+00    5  .0000E+00
6  .0000E+00    7  .1000E+01    8  .1000E+01
    9  .1000E+01   10  .1000E+01   11  .1000E+01   12  .1000E+01   13  .1000E+01
14  .1000E+01   15  .1000E+01   16  .1000E+01
   17  .0000E+00   18  .0000E+00   19  .0000E+00   20  .0000E+00   21  .0000E+00
22  .0000E+00   23  .0000E+00   24  .0000E+00
                                                DAY OF WEEK = SATURDAY
    1  .0000E+00    2  .0000E+00    3  .0000E+00    4  .0000E+00    5  .0000E+00
6  .0000E+00    7  .0000E+00    8  .0000E+00
    9  .0000E+00   10  .0000E+00   11  .0000E+00   12  .0000E+00   13  .0000E+00
14  .0000E+00   15  .0000E+00   16  .0000E+00
   17  .0000E+00   18  .0000E+00   19  .0000E+00   20  .0000E+00   21  .0000E+00
22  .0000E+00   23  .0000E+00   24  .0000E+00
                                                DAY OF WEEK = SUNDAY
    1  .0000E+00    2  .0000E+00    3  .0000E+00    4  .0000E+00    5  .0000E+00
6  .0000E+00    7  .0000E+00    8  .0000E+00
    9  .0000E+00   10  .0000E+00   11  .0000E+00   12  .0000E+00   13  .0000E+00
14  .0000E+00   15  .0000E+00   16  .0000E+00
   17  .0000E+00   18  .0000E+00   19  .0000E+00   20  .0000E+00   21  .0000E+00
22  .0000E+00   23  .0000E+00   24  .0000E+00
```

```
 *** AERMOD - VERSION 22112  ***   *** C:\Lakes\Project Files\Garvey\Garvey.isc
***        03/04/24
 *** AERMET - VERSION  16216 ***   ***
***        13:00:54

PAGE 386
 *** MODELOPTs:    RegDFAULT  CONC  ELEV  URBAN  ADJ_U*

                   * SOURCE EMISSION RATE SCALARS WHICH VARY DIURNALLY AND BY DAY
OF WEEK (HRDOW) *

 SOURCE ID = L0002356     ; SOURCE TYPE = VOLUME   :
  HOUR   SCALAR   HOUR   SCALAR   HOUR   SCALAR   HOUR   SCALAR   HOUR   SCALAR
HOUR   SCALAR   HOUR   SCALAR   HOUR   SCALAR
 - - - - - - - - - - - - - - - - - - - - - - - - - - - - - - - - - - - - - - - -
- - - - - - - - - - - - - - - - - - - - - - - - -
                                                DAY OF WEEK = WEEKDAY
    1  .0000E+00    2  .0000E+00    3  .0000E+00    4  .0000E+00    5  .0000E+00
6  .0000E+00    7  .1000E+01    8  .1000E+01
    9  .1000E+01   10  .1000E+01   11  .1000E+01   12  .1000E+01   13  .1000E+01
14  .1000E+01   15  .1000E+01   16  .1000E+01
   17  .0000E+00   18  .0000E+00   19  .0000E+00   20  .0000E+00   21  .0000E+00
22  .0000E+00   23  .0000E+00   24  .0000E+00
                                                DAY OF WEEK = SATURDAY
    1  .0000E+00    2  .0000E+00    3  .0000E+00    4  .0000E+00    5  .0000E+00
6  .0000E+00    7  .0000E+00    8  .0000E+00
    9  .0000E+00   10  .0000E+00   11  .0000E+00   12  .0000E+00   13  .0000E+00
14  .0000E+00   15  .0000E+00   16  .0000E+00
   17  .0000E+00   18  .0000E+00   19  .0000E+00   20  .0000E+00   21  .0000E+00
22  .0000E+00   23  .0000E+00   24  .0000E+00
                                                DAY OF WEEK = SUNDAY
    1  .0000E+00    2  .0000E+00    3  .0000E+00    4  .0000E+00    5  .0000E+00
6  .0000E+00    7  .0000E+00    8  .0000E+00
    9  .0000E+00   10  .0000E+00   11  .0000E+00   12  .0000E+00   13  .0000E+00
14  .0000E+00   15  .0000E+00   16  .0000E+00
   17  .0000E+00   18  .0000E+00   19  .0000E+00   20  .0000E+00   21  .0000E+00
22  .0000E+00   23  .0000E+00   24  .0000E+00
```

```
 *** AERMOD - VERSION 22112  ***   *** C:\Lakes\Project Files\Garvey\Garvey.isc
***        03/04/24
 *** AERMET - VERSION  16216 ***   ***
***        13:00:54

PAGE 387
 *** MODELOPTs:    RegDFAULT  CONC  ELEV  URBAN  ADJ_U*

                   * SOURCE EMISSION RATE SCALARS WHICH VARY DIURNALLY AND BY DAY
OF WEEK (HRDOW) *

 SOURCE ID = L0002357     ; SOURCE TYPE = VOLUME   :
  HOUR   SCALAR   HOUR   SCALAR   HOUR   SCALAR   HOUR   SCALAR   HOUR   SCALAR
HOUR   SCALAR   HOUR   SCALAR   HOUR   SCALAR
 - - - - - - - - - - - - - - - - - - - - - - - - - - - - - - - - - - - - - - - -
- - - - - - - - - - - - - - - - - - - - - - - - -
                                                DAY OF WEEK = WEEKDAY
    1  .0000E+00    2  .0000E+00    3  .0000E+00    4  .0000E+00    5  .0000E+00
6  .0000E+00    7  .1000E+01    8  .1000E+01
    9  .1000E+01   10  .1000E+01   11  .1000E+01   12  .1000E+01   13  .1000E+01
14  .1000E+01   15  .1000E+01   16  .1000E+01
   17  .0000E+00   18  .0000E+00   19  .0000E+00   20  .0000E+00   21  .0000E+00
22  .0000E+00   23  .0000E+00   24  .0000E+00
                                                DAY OF WEEK = SATURDAY
    1  .0000E+00    2  .0000E+00    3  .0000E+00    4  .0000E+00    5  .0000E+00
6  .0000E+00    7  .0000E+00    8  .0000E+00
    9  .0000E+00   10  .0000E+00   11  .0000E+00   12  .0000E+00   13  .0000E+00
14  .0000E+00   15  .0000E+00   16  .0000E+00
   17  .0000E+00   18  .0000E+00   19  .0000E+00   20  .0000E+00   21  .0000E+00
22  .0000E+00   23  .0000E+00   24  .0000E+00
                                                DAY OF WEEK = SUNDAY
    1  .0000E+00    2  .0000E+00    3  .0000E+00    4  .0000E+00    5  .0000E+00
6  .0000E+00    7  .0000E+00    8  .0000E+00
    9  .0000E+00   10  .0000E+00   11  .0000E+00   12  .0000E+00   13  .0000E+00
14  .0000E+00   15  .0000E+00   16  .0000E+00
   17  .0000E+00   18  .0000E+00   19  .0000E+00   20  .0000E+00   21  .0000E+00
22  .0000E+00   23  .0000E+00   24  .0000E+00
```

```
 *** AERMOD - VERSION 22112  ***   *** C:\Lakes\Project Files\Garvey\Garvey.isc
***        03/04/24
 *** AERMET - VERSION  16216 ***   ***
***        13:00:54

PAGE 388
 *** MODELOPTs:    RegDFAULT  CONC  ELEV  URBAN  ADJ_U*

                   * SOURCE EMISSION RATE SCALARS WHICH VARY DIURNALLY AND BY DAY
OF WEEK (HRDOW) *

 SOURCE ID = L0002358     ; SOURCE TYPE = VOLUME   :
  HOUR   SCALAR   HOUR   SCALAR   HOUR   SCALAR   HOUR   SCALAR   HOUR   SCALAR
HOUR   SCALAR   HOUR   SCALAR   HOUR   SCALAR
 - - - - - - - - - - - - - - - - - - - - - - - - - - - - - - - - - - - - - - - -
- - - - - - - - - - - - - - - - - - - - - - - - -
                                                DAY OF WEEK = WEEKDAY
    1  .0000E+00    2  .0000E+00    3  .0000E+00    4  .0000E+00    5  .0000E+00
6  .0000E+00    7  .1000E+01    8  .1000E+01
    9  .1000E+01   10  .1000E+01   11  .1000E+01   12  .1000E+01   13  .1000E+01
14  .1000E+01   15  .1000E+01   16  .1000E+01
   17  .0000E+00   18  .0000E+00   19  .0000E+00   20  .0000E+00   21  .0000E+00
22  .0000E+00   23  .0000E+00   24  .0000E+00
                                                DAY OF WEEK = SATURDAY
    1  .0000E+00    2  .0000E+00    3  .0000E+00    4  .0000E+00    5  .0000E+00
6  .0000E+00    7  .0000E+00    8  .0000E+00
    9  .0000E+00   10  .0000E+00   11  .0000E+00   12  .0000E+00   13  .0000E+00
14  .0000E+00   15  .0000E+00   16  .0000E+00
   17  .0000E+00   18  .0000E+00   19  .0000E+00   20  .0000E+00   21  .0000E+00
22  .0000E+00   23  .0000E+00   24  .0000E+00
                                                DAY OF WEEK = SUNDAY
    1  .0000E+00    2  .0000E+00    3  .0000E+00    4  .0000E+00    5  .0000E+00
6  .0000E+00    7  .0000E+00    8  .0000E+00
    9  .0000E+00   10  .0000E+00   11  .0000E+00   12  .0000E+00   13  .0000E+00
14  .0000E+00   15  .0000E+00   16  .0000E+00
   17  .0000E+00   18  .0000E+00   19  .0000E+00   20  .0000E+00   21  .0000E+00
22  .0000E+00   23  .0000E+00   24  .0000E+00
```

```
 *** AERMOD - VERSION 22112  ***   *** C:\Lakes\Project Files\Garvey\Garvey.isc
***        03/04/24
 *** AERMET - VERSION  16216 ***   ***
***        13:00:54

PAGE 389
 *** MODELOPTs:    RegDFAULT  CONC  ELEV  URBAN  ADJ_U*

                   * SOURCE EMISSION RATE SCALARS WHICH VARY DIURNALLY AND BY DAY
OF WEEK (HRDOW) *

 SOURCE ID = L0002359     ; SOURCE TYPE = VOLUME   :
  HOUR   SCALAR   HOUR   SCALAR   HOUR   SCALAR   HOUR   SCALAR   HOUR   SCALAR
HOUR   SCALAR   HOUR   SCALAR   HOUR   SCALAR
 - - - - - - - - - - - - - - - - - - - - - - - - - - - - - - - - - - - - - - - -
- - - - - - - - - - - - - - - - - - - - - - - - -
                                                DAY OF WEEK = WEEKDAY
    1  .0000E+00    2  .0000E+00    3  .0000E+00    4  .0000E+00    5  .0000E+00
6  .0000E+00    7  .1000E+01    8  .1000E+01
    9  .1000E+01   10  .1000E+01   11  .1000E+01   12  .1000E+01   13  .1000E+01
14  .1000E+01   15  .1000E+01   16  .1000E+01
   17  .0000E+00   18  .0000E+00   19  .0000E+00   20  .0000E+00   21  .0000E+00
22  .0000E+00   23  .0000E+00   24  .0000E+00
                                                DAY OF WEEK = SATURDAY
    1  .0000E+00    2  .0000E+00    3  .0000E+00    4  .0000E+00    5  .0000E+00
6  .0000E+00    7  .0000E+00    8  .0000E+00
    9  .0000E+00   10  .0000E+00   11  .0000E+00   12  .0000E+00   13  .0000E+00
14  .0000E+00   15  .0000E+00   16  .0000E+00
   17  .0000E+00   18  .0000E+00   19  .0000E+00   20  .0000E+00   21  .0000E+00
22  .0000E+00   23  .0000E+00   24  .0000E+00
                                                DAY OF WEEK = SUNDAY
    1  .0000E+00    2  .0000E+00    3  .0000E+00    4  .0000E+00    5  .0000E+00
6  .0000E+00    7  .0000E+00    8  .0000E+00
    9  .0000E+00   10  .0000E+00   11  .0000E+00   12  .0000E+00   13  .0000E+00
14  .0000E+00   15  .0000E+00   16  .0000E+00
   17  .0000E+00   18  .0000E+00   19  .0000E+00   20  .0000E+00   21  .0000E+00
22  .0000E+00   23  .0000E+00   24  .0000E+00
```

*** MODELOPTs: RegDFAULT CONC ELEV URBAN ADJ_U*

* SOURCE EMISSION RATE SCALARS WHICH VARY DIURNALLY AND BY DAY OF WEEK (HRDOW) *

SOURCE ID = L0002360 ; SOURCE TYPE = VOLUME :

HOUR	SCALAR	HOUR	SCALAR	HOUR	SCALAR	HOUR	SCALAR	HOUR	SCALAR	HOUR	SCALAR	HOUR	SCALAR	HOUR	SCALAR

DAY OF WEEK = WEEKDAY

1	.0000E+00	2	.0000E+00	3	.0000E+00	4	.0000E+00	5	.0000E+00	6	.0000E+00	7	.1000E+01	8	.1000E+01
9	.1000E+01	10	.1000E+01	11	.1000E+01	12	.1000E+01	13	.1000E+01	14	.1000E+01	15	.1000E+01	16	.1000E+01
17	.0000E+00	18	.0000E+00	19	.0000E+00	20	.0000E+00	21	.0000E+00	22	.0000E+00	23	.0000E+00	24	.0000E+00

DAY OF WEEK = SATURDAY

1	.0000E+00	2	.0000E+00	3	.0000E+00	4	.0000E+00	5	.0000E+00	6	.0000E+00	7	.0000E+00	8	.0000E+00
9	.0000E+00	10	.0000E+00	11	.0000E+00	12	.0000E+00	13	.0000E+00	14	.0000E+00	15	.0000E+00	16	.0000E+00
17	.0000E+00	18	.0000E+00	19	.0000E+00	20	.0000E+00	21	.0000E+00	22	.0000E+00	23	.0000E+00	24	.0000E+00

DAY OF WEEK = SUNDAY

1	.0000E+00	2	.0000E+00	3	.0000E+00	4	.0000E+00	5	.0000E+00	6	.0000E+00	7	.0000E+00	8	.0000E+00
9	.0000E+00	10	.0000E+00	11	.0000E+00	12	.0000E+00	13	.0000E+00	14	.0000E+00	15	.0000E+00	16	.0000E+00
17	.0000E+00	18	.0000E+00	19	.0000E+00	20	.0000E+00	21	.0000E+00	22	.0000E+00	23	.0000E+00	24	.0000E+00

```
 *** AERMOD - VERSION 22112  ***   *** C:\Lakes\Project Files\Garvey\Garvey.isc
***        03/04/24
 *** AERMET - VERSION  16216 ***   ***
***        13:00:54

PAGE 391
 *** MODELOPTs:    RegDFAULT  CONC  ELEV  URBAN  ADJ_U*

                   * SOURCE EMISSION RATE SCALARS WHICH VARY DIURNALLY AND BY DAY
OF WEEK (HRDOW) *

 SOURCE ID = L0002361     ; SOURCE TYPE = VOLUME   :
  HOUR   SCALAR   HOUR   SCALAR   HOUR   SCALAR   HOUR   SCALAR   HOUR   SCALAR
HOUR   SCALAR   HOUR   SCALAR   HOUR   SCALAR
 - - - - - - - - - - - - - - - - - - - - - - - - - - - - - - - - - - - - - - - -
- - - - - - - - - - - - - - - - - - - - - - - - - -
                                                DAY OF WEEK = WEEKDAY
    1  .0000E+00    2  .0000E+00    3  .0000E+00    4  .0000E+00    5  .0000E+00
6  .0000E+00    7  .1000E+01    8  .1000E+01
    9  .1000E+01   10  .1000E+01   11  .1000E+01   12  .1000E+01   13  .1000E+01
14  .1000E+01   15  .1000E+01   16  .1000E+01
   17  .0000E+00   18  .0000E+00   19  .0000E+00   20  .0000E+00   21  .0000E+00
22  .0000E+00   23  .0000E+00   24  .0000E+00
                                                DAY OF WEEK = SATURDAY
    1  .0000E+00    2  .0000E+00    3  .0000E+00    4  .0000E+00    5  .0000E+00
6  .0000E+00    7  .0000E+00    8  .0000E+00
    9  .0000E+00   10  .0000E+00   11  .0000E+00   12  .0000E+00   13  .0000E+00
14  .0000E+00   15  .0000E+00   16  .0000E+00
   17  .0000E+00   18  .0000E+00   19  .0000E+00   20  .0000E+00   21  .0000E+00
22  .0000E+00   23  .0000E+00   24  .0000E+00
                                                DAY OF WEEK = SUNDAY
    1  .0000E+00    2  .0000E+00    3  .0000E+00    4  .0000E+00    5  .0000E+00
6  .0000E+00    7  .0000E+00    8  .0000E+00
    9  .0000E+00   10  .0000E+00   11  .0000E+00   12  .0000E+00   13  .0000E+00
14  .0000E+00   15  .0000E+00   16  .0000E+00
   17  .0000E+00   18  .0000E+00   19  .0000E+00   20  .0000E+00   21  .0000E+00
22  .0000E+00   23  .0000E+00   24  .0000E+00
```

*** MODELOPTs: RegDFAULT CONC ELEV URBAN ADJ_U*

* SOURCE EMISSION RATE SCALARS WHICH VARY DIURNALLY AND BY DAY OF WEEK (HRDOW) *

SOURCE ID = L0002362 ; SOURCE TYPE = VOLUME :

HOUR	SCALAR	HOUR	SCALAR	HOUR	SCALAR	HOUR	SCALAR	HOUR	SCALAR	HOUR	SCALAR	HOUR	SCALAR	HOUR	SCALAR

DAY OF WEEK = WEEKDAY

1	.0000E+00	2	.0000E+00	3	.0000E+00	4	.0000E+00	5	.0000E+00	6	.0000E+00	7	.1000E+01	8	.1000E+01
9	.1000E+01	10	.1000E+01	11	.1000E+01	12	.1000E+01	13	.1000E+01	14	.1000E+01	15	.1000E+01	16	.1000E+01
17	.0000E+00	18	.0000E+00	19	.0000E+00	20	.0000E+00	21	.0000E+00	22	.0000E+00	23	.0000E+00	24	.0000E+00

DAY OF WEEK = SATURDAY

1	.0000E+00	2	.0000E+00	3	.0000E+00	4	.0000E+00	5	.0000E+00	6	.0000E+00	7	.0000E+00	8	.0000E+00
9	.0000E+00	10	.0000E+00	11	.0000E+00	12	.0000E+00	13	.0000E+00	14	.0000E+00	15	.0000E+00	16	.0000E+00
17	.0000E+00	18	.0000E+00	19	.0000E+00	20	.0000E+00	21	.0000E+00	22	.0000E+00	23	.0000E+00	24	.0000E+00

DAY OF WEEK = SUNDAY

1	.0000E+00	2	.0000E+00	3	.0000E+00	4	.0000E+00	5	.0000E+00	6	.0000E+00	7	.0000E+00	8	.0000E+00
9	.0000E+00	10	.0000E+00	11	.0000E+00	12	.0000E+00	13	.0000E+00	14	.0000E+00	15	.0000E+00	16	.0000E+00
17	.0000E+00	18	.0000E+00	19	.0000E+00	20	.0000E+00	21	.0000E+00	22	.0000E+00	23	.0000E+00	24	.0000E+00

*** MODELOPTs: RegDFAULT CONC ELEV URBAN ADJ_U*

* SOURCE EMISSION RATE SCALARS WHICH VARY DIURNALLY AND BY DAY OF WEEK (HRDOW) *

SOURCE ID = L0002363 ; SOURCE TYPE = VOLUME :

HOUR	SCALAR	HOUR	SCALAR	HOUR	SCALAR	HOUR	SCALAR	HOUR	SCALAR	HOUR	SCALAR	HOUR	SCALAR	HOUR	SCALAR

DAY OF WEEK = WEEKDAY

1	.0000E+00	2	.0000E+00	3	.0000E+00	4	.0000E+00	5	.0000E+00	6	.0000E+00	7	.1000E+01	8	.1000E+01
9	.1000E+01	10	.1000E+01	11	.1000E+01	12	.1000E+01	13	.1000E+01	14	.1000E+01	15	.1000E+01	16	.1000E+01
17	.0000E+00	18	.0000E+00	19	.0000E+00	20	.0000E+00	21	.0000E+00	22	.0000E+00	23	.0000E+00	24	.0000E+00

DAY OF WEEK = SATURDAY

1	.0000E+00	2	.0000E+00	3	.0000E+00	4	.0000E+00	5	.0000E+00	6	.0000E+00	7	.0000E+00	8	.0000E+00
9	.0000E+00	10	.0000E+00	11	.0000E+00	12	.0000E+00	13	.0000E+00	14	.0000E+00	15	.0000E+00	16	.0000E+00
17	.0000E+00	18	.0000E+00	19	.0000E+00	20	.0000E+00	21	.0000E+00	22	.0000E+00	23	.0000E+00	24	.0000E+00

DAY OF WEEK = SUNDAY

1	.0000E+00	2	.0000E+00	3	.0000E+00	4	.0000E+00	5	.0000E+00	6	.0000E+00	7	.0000E+00	8	.0000E+00
9	.0000E+00	10	.0000E+00	11	.0000E+00	12	.0000E+00	13	.0000E+00	14	.0000E+00	15	.0000E+00	16	.0000E+00
17	.0000E+00	18	.0000E+00	19	.0000E+00	20	.0000E+00	21	.0000E+00	22	.0000E+00	23	.0000E+00	24	.0000E+00

```
 *** AERMOD - VERSION 22112  ***   *** C:\Lakes\Project Files\Garvey\Garvey.isc
***        03/04/24
 *** AERMET - VERSION  16216 ***   ***
***        13:00:54

PAGE 394
 *** MODELOPTs:    RegDFAULT  CONC  ELEV  URBAN  ADJ_U*

                   * SOURCE EMISSION RATE SCALARS WHICH VARY DIURNALLY AND BY DAY
OF WEEK (HRDOW) *

 SOURCE ID = L0002364     ; SOURCE TYPE = VOLUME   :
  HOUR   SCALAR   HOUR   SCALAR   HOUR   SCALAR   HOUR   SCALAR   HOUR   SCALAR
HOUR   SCALAR   HOUR   SCALAR   HOUR   SCALAR
 - - - - - - - - - - - - - - - - - - - - - - - - - - - - - - - - - - - - - - - -
- - - - - - - - - - - - - - - - - - - - - - - - -
                                                DAY OF WEEK = WEEKDAY
    1  .0000E+00    2  .0000E+00    3  .0000E+00    4  .0000E+00    5  .0000E+00
6  .0000E+00    7  .1000E+01    8  .1000E+01
    9  .1000E+01   10  .1000E+01   11  .1000E+01   12  .1000E+01   13  .1000E+01
14  .1000E+01   15  .1000E+01   16  .1000E+01
   17  .0000E+00   18  .0000E+00   19  .0000E+00   20  .0000E+00   21  .0000E+00
22  .0000E+00   23  .0000E+00   24  .0000E+00
                                                DAY OF WEEK = SATURDAY
    1  .0000E+00    2  .0000E+00    3  .0000E+00    4  .0000E+00    5  .0000E+00
6  .0000E+00    7  .0000E+00    8  .0000E+00
    9  .0000E+00   10  .0000E+00   11  .0000E+00   12  .0000E+00   13  .0000E+00
14  .0000E+00   15  .0000E+00   16  .0000E+00
   17  .0000E+00   18  .0000E+00   19  .0000E+00   20  .0000E+00   21  .0000E+00
22  .0000E+00   23  .0000E+00   24  .0000E+00
                                                DAY OF WEEK = SUNDAY
    1  .0000E+00    2  .0000E+00    3  .0000E+00    4  .0000E+00    5  .0000E+00
6  .0000E+00    7  .0000E+00    8  .0000E+00
    9  .0000E+00   10  .0000E+00   11  .0000E+00   12  .0000E+00   13  .0000E+00
14  .0000E+00   15  .0000E+00   16  .0000E+00
   17  .0000E+00   18  .0000E+00   19  .0000E+00   20  .0000E+00   21  .0000E+00
22  .0000E+00   23  .0000E+00   24  .0000E+00
```

*** MODELOPTs: RegDFAULT CONC ELEV URBAN ADJ_U*

* SOURCE EMISSION RATE SCALARS WHICH VARY DIURNALLY AND BY DAY OF WEEK (HRDOW) *

SOURCE ID = L0002365 ; SOURCE TYPE = VOLUME :

HOUR	SCALAR	HOUR	SCALAR	HOUR	SCALAR	HOUR	SCALAR	HOUR	SCALAR	HOUR	SCALAR	HOUR	SCALAR	HOUR	SCALAR

DAY OF WEEK = WEEKDAY

1	.0000E+00	2	.0000E+00	3	.0000E+00	4	.0000E+00	5	.0000E+00	6	.0000E+00	7	.1000E+01	8	.1000E+01
9	.1000E+01	10	.1000E+01	11	.1000E+01	12	.1000E+01	13	.1000E+01	14	.1000E+01	15	.1000E+01	16	.1000E+01
17	.0000E+00	18	.0000E+00	19	.0000E+00	20	.0000E+00	21	.0000E+00	22	.0000E+00	23	.0000E+00	24	.0000E+00

DAY OF WEEK = SATURDAY

1	.0000E+00	2	.0000E+00	3	.0000E+00	4	.0000E+00	5	.0000E+00	6	.0000E+00	7	.0000E+00	8	.0000E+00
9	.0000E+00	10	.0000E+00	11	.0000E+00	12	.0000E+00	13	.0000E+00	14	.0000E+00	15	.0000E+00	16	.0000E+00
17	.0000E+00	18	.0000E+00	19	.0000E+00	20	.0000E+00	21	.0000E+00	22	.0000E+00	23	.0000E+00	24	.0000E+00

DAY OF WEEK = SUNDAY

1	.0000E+00	2	.0000E+00	3	.0000E+00	4	.0000E+00	5	.0000E+00	6	.0000E+00	7	.0000E+00	8	.0000E+00
9	.0000E+00	10	.0000E+00	11	.0000E+00	12	.0000E+00	13	.0000E+00	14	.0000E+00	15	.0000E+00	16	.0000E+00
17	.0000E+00	18	.0000E+00	19	.0000E+00	20	.0000E+00	21	.0000E+00	22	.0000E+00	23	.0000E+00	24	.0000E+00

*** MODELOPTs: RegDFAULT CONC ELEV URBAN ADJ_U*

* SOURCE EMISSION RATE SCALARS WHICH VARY DIURNALLY AND BY DAY OF WEEK (HRDOW) *

SOURCE ID = L0002366 ; SOURCE TYPE = VOLUME :

HOUR	SCALAR	HOUR	SCALAR	HOUR	SCALAR	HOUR	SCALAR	HOUR	SCALAR	HOUR	SCALAR	HOUR	SCALAR	HOUR	SCALAR

DAY OF WEEK = WEEKDAY

1	.0000E+00	2	.0000E+00	3	.0000E+00	4	.0000E+00	5	.0000E+00	6	.0000E+00	7	.1000E+01	8	.1000E+01
9	.1000E+01	10	.1000E+01	11	.1000E+01	12	.1000E+01	13	.1000E+01	14	.1000E+01	15	.1000E+01	16	.1000E+01
17	.0000E+00	18	.0000E+00	19	.0000E+00	20	.0000E+00	21	.0000E+00	22	.0000E+00	23	.0000E+00	24	.0000E+00

DAY OF WEEK = SATURDAY

1	.0000E+00	2	.0000E+00	3	.0000E+00	4	.0000E+00	5	.0000E+00	6	.0000E+00	7	.0000E+00	8	.0000E+00
9	.0000E+00	10	.0000E+00	11	.0000E+00	12	.0000E+00	13	.0000E+00	14	.0000E+00	15	.0000E+00	16	.0000E+00
17	.0000E+00	18	.0000E+00	19	.0000E+00	20	.0000E+00	21	.0000E+00	22	.0000E+00	23	.0000E+00	24	.0000E+00

DAY OF WEEK = SUNDAY

1	.0000E+00	2	.0000E+00	3	.0000E+00	4	.0000E+00	5	.0000E+00	6	.0000E+00	7	.0000E+00	8	.0000E+00
9	.0000E+00	10	.0000E+00	11	.0000E+00	12	.0000E+00	13	.0000E+00	14	.0000E+00	15	.0000E+00	16	.0000E+00
17	.0000E+00	18	.0000E+00	19	.0000E+00	20	.0000E+00	21	.0000E+00	22	.0000E+00	23	.0000E+00	24	.0000E+00

*** MODELOPTs: RegDFAULT CONC ELEV URBAN ADJ_U*

* SOURCE EMISSION RATE SCALARS WHICH VARY DIURNALLY AND BY DAY OF WEEK (HRDOW) *

SOURCE ID = L0002367 ; SOURCE TYPE = VOLUME :

HOUR	SCALAR	HOUR	SCALAR	HOUR	SCALAR	HOUR	SCALAR	HOUR	SCALAR	HOUR	SCALAR	HOUR	SCALAR	HOUR	SCALAR

DAY OF WEEK = WEEKDAY

1	.0000E+00	2	.0000E+00	3	.0000E+00	4	.0000E+00	5	.0000E+00	6	.0000E+00	7	.1000E+01	8	.1000E+01
9	.1000E+01	10	.1000E+01	11	.1000E+01	12	.1000E+01	13	.1000E+01	14	.1000E+01	15	.1000E+01	16	.1000E+01
17	.0000E+00	18	.0000E+00	19	.0000E+00	20	.0000E+00	21	.0000E+00	22	.0000E+00	23	.0000E+00	24	.0000E+00

DAY OF WEEK = SATURDAY

1	.0000E+00	2	.0000E+00	3	.0000E+00	4	.0000E+00	5	.0000E+00	6	.0000E+00	7	.0000E+00	8	.0000E+00
9	.0000E+00	10	.0000E+00	11	.0000E+00	12	.0000E+00	13	.0000E+00	14	.0000E+00	15	.0000E+00	16	.0000E+00
17	.0000E+00	18	.0000E+00	19	.0000E+00	20	.0000E+00	21	.0000E+00	22	.0000E+00	23	.0000E+00	24	.0000E+00

DAY OF WEEK = SUNDAY

1	.0000E+00	2	.0000E+00	3	.0000E+00	4	.0000E+00	5	.0000E+00	6	.0000E+00	7	.0000E+00	8	.0000E+00
9	.0000E+00	10	.0000E+00	11	.0000E+00	12	.0000E+00	13	.0000E+00	14	.0000E+00	15	.0000E+00	16	.0000E+00
17	.0000E+00	18	.0000E+00	19	.0000E+00	20	.0000E+00	21	.0000E+00	22	.0000E+00	23	.0000E+00	24	.0000E+00

```
 *** AERMOD - VERSION 22112  ***   *** C:\Lakes\Project Files\Garvey\Garvey.isc
***        03/04/24
 *** AERMET - VERSION  16216 ***   ***
***        13:00:54

PAGE 398
 *** MODELOPTs:    RegDFAULT  CONC  ELEV  URBAN  ADJ_U*

                   * SOURCE EMISSION RATE SCALARS WHICH VARY DIURNALLY AND BY DAY
OF WEEK (HRDOW) *

 SOURCE ID = L0002368     ; SOURCE TYPE = VOLUME   :
  HOUR   SCALAR   HOUR   SCALAR   HOUR   SCALAR   HOUR   SCALAR   HOUR   SCALAR
HOUR   SCALAR   HOUR   SCALAR   HOUR   SCALAR
 - - - - - - - - - - - - - - - - - - - - - - - - - - - - - - - - - - - - - - - -
- - - - - - - - - - - - - - - - - - - - - - - - -
                                                DAY OF WEEK = WEEKDAY
    1  .0000E+00    2  .0000E+00    3  .0000E+00    4  .0000E+00    5  .0000E+00
6  .0000E+00    7  .1000E+01    8  .1000E+01
    9  .1000E+01   10  .1000E+01   11  .1000E+01   12  .1000E+01   13  .1000E+01
14  .1000E+01   15  .1000E+01   16  .1000E+01
   17  .0000E+00   18  .0000E+00   19  .0000E+00   20  .0000E+00   21  .0000E+00
22  .0000E+00   23  .0000E+00   24  .0000E+00
                                                DAY OF WEEK = SATURDAY
    1  .0000E+00    2  .0000E+00    3  .0000E+00    4  .0000E+00    5  .0000E+00
6  .0000E+00    7  .0000E+00    8  .0000E+00
    9  .0000E+00   10  .0000E+00   11  .0000E+00   12  .0000E+00   13  .0000E+00
14  .0000E+00   15  .0000E+00   16  .0000E+00
   17  .0000E+00   18  .0000E+00   19  .0000E+00   20  .0000E+00   21  .0000E+00
22  .0000E+00   23  .0000E+00   24  .0000E+00
                                                DAY OF WEEK = SUNDAY
    1  .0000E+00    2  .0000E+00    3  .0000E+00    4  .0000E+00    5  .0000E+00
6  .0000E+00    7  .0000E+00    8  .0000E+00
    9  .0000E+00   10  .0000E+00   11  .0000E+00   12  .0000E+00   13  .0000E+00
14  .0000E+00   15  .0000E+00   16  .0000E+00
   17  .0000E+00   18  .0000E+00   19  .0000E+00   20  .0000E+00   21  .0000E+00
22  .0000E+00   23  .0000E+00   24  .0000E+00
```

*** MODELOPTs: RegDFAULT CONC ELEV URBAN ADJ_U*

* SOURCE EMISSION RATE SCALARS WHICH VARY DIURNALLY AND BY DAY OF WEEK (HRDOW) *

SOURCE ID = L0002369 ; SOURCE TYPE = VOLUME :

HOUR	SCALAR	HOUR	SCALAR	HOUR	SCALAR	HOUR	SCALAR	HOUR	SCALAR	HOUR	SCALAR	HOUR	SCALAR	HOUR	SCALAR

DAY OF WEEK = WEEKDAY

1	.0000E+00	2	.0000E+00	3	.0000E+00	4	.0000E+00	5	.0000E+00	6	.0000E+00	7	.1000E+01	8	.1000E+01
9	.1000E+01	10	.1000E+01	11	.1000E+01	12	.1000E+01	13	.1000E+01	14	.1000E+01	15	.1000E+01	16	.1000E+01
17	.0000E+00	18	.0000E+00	19	.0000E+00	20	.0000E+00	21	.0000E+00	22	.0000E+00	23	.0000E+00	24	.0000E+00

DAY OF WEEK = SATURDAY

1	.0000E+00	2	.0000E+00	3	.0000E+00	4	.0000E+00	5	.0000E+00	6	.0000E+00	7	.0000E+00	8	.0000E+00
9	.0000E+00	10	.0000E+00	11	.0000E+00	12	.0000E+00	13	.0000E+00	14	.0000E+00	15	.0000E+00	16	.0000E+00
17	.0000E+00	18	.0000E+00	19	.0000E+00	20	.0000E+00	21	.0000E+00	22	.0000E+00	23	.0000E+00	24	.0000E+00

DAY OF WEEK = SUNDAY

1	.0000E+00	2	.0000E+00	3	.0000E+00	4	.0000E+00	5	.0000E+00	6	.0000E+00	7	.0000E+00	8	.0000E+00
9	.0000E+00	10	.0000E+00	11	.0000E+00	12	.0000E+00	13	.0000E+00	14	.0000E+00	15	.0000E+00	16	.0000E+00
17	.0000E+00	18	.0000E+00	19	.0000E+00	20	.0000E+00	21	.0000E+00	22	.0000E+00	23	.0000E+00	24	.0000E+00

```
 *** AERMOD - VERSION 22112  ***   *** C:\Lakes\Project Files\Garvey\Garvey.isc
***        03/04/24
 *** AERMET - VERSION  16216 ***   ***
***        13:00:54

PAGE 400
 *** MODELOPTs:    RegDFAULT  CONC  ELEV  URBAN  ADJ_U*

                   * SOURCE EMISSION RATE SCALARS WHICH VARY DIURNALLY AND BY DAY
OF WEEK (HRDOW) *

 SOURCE ID = L0002370     ; SOURCE TYPE = VOLUME   :
  HOUR   SCALAR   HOUR   SCALAR   HOUR   SCALAR   HOUR   SCALAR   HOUR   SCALAR
HOUR   SCALAR   HOUR   SCALAR   HOUR   SCALAR
 - - - - - - - - - - - - - - - - - - - - - - - - - - - - - - - - - - - - - - - -
- - - - - - - - - - - - - - - - - - - - - - - - -
                                                DAY OF WEEK = WEEKDAY
    1  .0000E+00    2  .0000E+00    3  .0000E+00    4  .0000E+00    5  .0000E+00
6  .0000E+00    7  .1000E+01    8  .1000E+01
    9  .1000E+01   10  .1000E+01   11  .1000E+01   12  .1000E+01   13  .1000E+01
14  .1000E+01   15  .1000E+01   16  .1000E+01
   17  .0000E+00   18  .0000E+00   19  .0000E+00   20  .0000E+00   21  .0000E+00
22  .0000E+00   23  .0000E+00   24  .0000E+00
                                                DAY OF WEEK = SATURDAY
    1  .0000E+00    2  .0000E+00    3  .0000E+00    4  .0000E+00    5  .0000E+00
6  .0000E+00    7  .0000E+00    8  .0000E+00
    9  .0000E+00   10  .0000E+00   11  .0000E+00   12  .0000E+00   13  .0000E+00
14  .0000E+00   15  .0000E+00   16  .0000E+00
   17  .0000E+00   18  .0000E+00   19  .0000E+00   20  .0000E+00   21  .0000E+00
22  .0000E+00   23  .0000E+00   24  .0000E+00
                                                DAY OF WEEK = SUNDAY
    1  .0000E+00    2  .0000E+00    3  .0000E+00    4  .0000E+00    5  .0000E+00
6  .0000E+00    7  .0000E+00    8  .0000E+00
    9  .0000E+00   10  .0000E+00   11  .0000E+00   12  .0000E+00   13  .0000E+00
14  .0000E+00   15  .0000E+00   16  .0000E+00
   17  .0000E+00   18  .0000E+00   19  .0000E+00   20  .0000E+00   21  .0000E+00
22  .0000E+00   23  .0000E+00   24  .0000E+00
```

*** MODELOPTs: RegDFAULT CONC ELEV URBAN ADJ_U*

* SOURCE EMISSION RATE SCALARS WHICH VARY DIURNALLY AND BY DAY OF WEEK (HRDOW) *

SOURCE ID = L0002371 ; SOURCE TYPE = VOLUME :

HOUR	SCALAR	HOUR	SCALAR	HOUR	SCALAR	HOUR	SCALAR	HOUR	SCALAR	HOUR	SCALAR	HOUR	SCALAR	HOUR	SCALAR

DAY OF WEEK = WEEKDAY

1	.0000E+00	2	.0000E+00	3	.0000E+00	4	.0000E+00	5	.0000E+00	6	.0000E+00	7	.1000E+01	8	.1000E+01
9	.1000E+01	10	.1000E+01	11	.1000E+01	12	.1000E+01	13	.1000E+01	14	.1000E+01	15	.1000E+01	16	.1000E+01
17	.0000E+00	18	.0000E+00	19	.0000E+00	20	.0000E+00	21	.0000E+00	22	.0000E+00	23	.0000E+00	24	.0000E+00

DAY OF WEEK = SATURDAY

1	.0000E+00	2	.0000E+00	3	.0000E+00	4	.0000E+00	5	.0000E+00	6	.0000E+00	7	.0000E+00	8	.0000E+00
9	.0000E+00	10	.0000E+00	11	.0000E+00	12	.0000E+00	13	.0000E+00	14	.0000E+00	15	.0000E+00	16	.0000E+00
17	.0000E+00	18	.0000E+00	19	.0000E+00	20	.0000E+00	21	.0000E+00	22	.0000E+00	23	.0000E+00	24	.0000E+00

DAY OF WEEK = SUNDAY

1	.0000E+00	2	.0000E+00	3	.0000E+00	4	.0000E+00	5	.0000E+00	6	.0000E+00	7	.0000E+00	8	.0000E+00
9	.0000E+00	10	.0000E+00	11	.0000E+00	12	.0000E+00	13	.0000E+00	14	.0000E+00	15	.0000E+00	16	.0000E+00
17	.0000E+00	18	.0000E+00	19	.0000E+00	20	.0000E+00	21	.0000E+00	22	.0000E+00	23	.0000E+00	24	.0000E+00

```
 *** AERMOD - VERSION 22112  ***   *** C:\Lakes\Project Files\Garvey\Garvey.isc
***        03/04/24
 *** AERMET - VERSION  16216 ***   ***
***        13:00:54

PAGE 402
 *** MODELOPTs:    RegDFAULT  CONC  ELEV  URBAN  ADJ_U*

                   * SOURCE EMISSION RATE SCALARS WHICH VARY DIURNALLY AND BY DAY
OF WEEK (HRDOW) *

 SOURCE ID = L0002372     ; SOURCE TYPE = VOLUME   :
  HOUR   SCALAR   HOUR   SCALAR   HOUR   SCALAR   HOUR   SCALAR   HOUR   SCALAR
HOUR   SCALAR   HOUR   SCALAR   HOUR   SCALAR
 - - - - - - - - - - - - - - - - - - - - - - - - - - - - - - - - - - - - - - - -
- - - - - - - - - - - - - - - - - - - - - - - - -
                                                DAY OF WEEK = WEEKDAY
    1  .0000E+00    2  .0000E+00    3  .0000E+00    4  .0000E+00    5  .0000E+00
6  .0000E+00    7  .1000E+01    8  .1000E+01
    9  .1000E+01   10  .1000E+01   11  .1000E+01   12  .1000E+01   13  .1000E+01
14  .1000E+01   15  .1000E+01   16  .1000E+01
   17  .0000E+00   18  .0000E+00   19  .0000E+00   20  .0000E+00   21  .0000E+00
22  .0000E+00   23  .0000E+00   24  .0000E+00
                                                DAY OF WEEK = SATURDAY
    1  .0000E+00    2  .0000E+00    3  .0000E+00    4  .0000E+00    5  .0000E+00
6  .0000E+00    7  .0000E+00    8  .0000E+00
    9  .0000E+00   10  .0000E+00   11  .0000E+00   12  .0000E+00   13  .0000E+00
14  .0000E+00   15  .0000E+00   16  .0000E+00
   17  .0000E+00   18  .0000E+00   19  .0000E+00   20  .0000E+00   21  .0000E+00
22  .0000E+00   23  .0000E+00   24  .0000E+00
                                                DAY OF WEEK = SUNDAY
    1  .0000E+00    2  .0000E+00    3  .0000E+00    4  .0000E+00    5  .0000E+00
6  .0000E+00    7  .0000E+00    8  .0000E+00
    9  .0000E+00   10  .0000E+00   11  .0000E+00   12  .0000E+00   13  .0000E+00
14  .0000E+00   15  .0000E+00   16  .0000E+00
   17  .0000E+00   18  .0000E+00   19  .0000E+00   20  .0000E+00   21  .0000E+00
22  .0000E+00   23  .0000E+00   24  .0000E+00
```

```
 *** AERMOD - VERSION 22112  ***   *** C:\Lakes\Project Files\Garvey\Garvey.isc
***        03/04/24
 *** AERMET - VERSION  16216 ***   ***
***        13:00:54

PAGE 403
 *** MODELOPTs:    RegDFAULT  CONC  ELEV  URBAN  ADJ_U*

                   * SOURCE EMISSION RATE SCALARS WHICH VARY DIURNALLY AND BY DAY
OF WEEK (HRDOW) *

 SOURCE ID = L0002373     ; SOURCE TYPE = VOLUME   :
  HOUR   SCALAR   HOUR   SCALAR   HOUR   SCALAR   HOUR   SCALAR   HOUR   SCALAR
HOUR   SCALAR   HOUR   SCALAR   HOUR   SCALAR
 - - - - - - - - - - - - - - - - - - - - - - - - - - - - - - - - - - - - - - - -
- - - - - - - - - - - - - - - - - - - - - - - - -
                                                DAY OF WEEK = WEEKDAY
    1  .0000E+00    2  .0000E+00    3  .0000E+00    4  .0000E+00    5  .0000E+00
6  .0000E+00    7  .1000E+01    8  .1000E+01
    9  .1000E+01   10  .1000E+01   11  .1000E+01   12  .1000E+01   13  .1000E+01
14  .1000E+01   15  .1000E+01   16  .1000E+01
   17  .0000E+00   18  .0000E+00   19  .0000E+00   20  .0000E+00   21  .0000E+00
22  .0000E+00   23  .0000E+00   24  .0000E+00
                                                DAY OF WEEK = SATURDAY
    1  .0000E+00    2  .0000E+00    3  .0000E+00    4  .0000E+00    5  .0000E+00
6  .0000E+00    7  .0000E+00    8  .0000E+00
    9  .0000E+00   10  .0000E+00   11  .0000E+00   12  .0000E+00   13  .0000E+00
14  .0000E+00   15  .0000E+00   16  .0000E+00
   17  .0000E+00   18  .0000E+00   19  .0000E+00   20  .0000E+00   21  .0000E+00
22  .0000E+00   23  .0000E+00   24  .0000E+00
                                                DAY OF WEEK = SUNDAY
    1  .0000E+00    2  .0000E+00    3  .0000E+00    4  .0000E+00    5  .0000E+00
6  .0000E+00    7  .0000E+00    8  .0000E+00
    9  .0000E+00   10  .0000E+00   11  .0000E+00   12  .0000E+00   13  .0000E+00
14  .0000E+00   15  .0000E+00   16  .0000E+00
   17  .0000E+00   18  .0000E+00   19  .0000E+00   20  .0000E+00   21  .0000E+00
22  .0000E+00   23  .0000E+00   24  .0000E+00
```

```
 *** AERMOD - VERSION 22112  ***   *** C:\Lakes\Project Files\Garvey\Garvey.isc
***        03/04/24
 *** AERMET - VERSION  16216 ***   ***
***        13:00:54

PAGE 404
 *** MODELOPTs:    RegDFAULT  CONC  ELEV  URBAN  ADJ_U*

                   * SOURCE EMISSION RATE SCALARS WHICH VARY DIURNALLY AND BY DAY
OF WEEK (HRDOW) *

 SOURCE ID = L0002374     ; SOURCE TYPE = VOLUME   :
  HOUR   SCALAR   HOUR   SCALAR   HOUR   SCALAR   HOUR   SCALAR   HOUR   SCALAR
HOUR   SCALAR   HOUR   SCALAR   HOUR   SCALAR
 - - - - - - - - - - - - - - - - - - - - - - - - - - - - - - - - - - - - - - - -
- - - - - - - - - - - - - - - - - - - - - - - - -
                                                DAY OF WEEK = WEEKDAY
    1  .0000E+00    2  .0000E+00    3  .0000E+00    4  .0000E+00    5  .0000E+00
6  .0000E+00    7  .1000E+01    8  .1000E+01
    9  .1000E+01   10  .1000E+01   11  .1000E+01   12  .1000E+01   13  .1000E+01
14  .1000E+01   15  .1000E+01   16  .1000E+01
   17  .0000E+00   18  .0000E+00   19  .0000E+00   20  .0000E+00   21  .0000E+00
22  .0000E+00   23  .0000E+00   24  .0000E+00
                                                DAY OF WEEK = SATURDAY
    1  .0000E+00    2  .0000E+00    3  .0000E+00    4  .0000E+00    5  .0000E+00
6  .0000E+00    7  .0000E+00    8  .0000E+00
    9  .0000E+00   10  .0000E+00   11  .0000E+00   12  .0000E+00   13  .0000E+00
14  .0000E+00   15  .0000E+00   16  .0000E+00
   17  .0000E+00   18  .0000E+00   19  .0000E+00   20  .0000E+00   21  .0000E+00
22  .0000E+00   23  .0000E+00   24  .0000E+00
                                                DAY OF WEEK = SUNDAY
    1  .0000E+00    2  .0000E+00    3  .0000E+00    4  .0000E+00    5  .0000E+00
6  .0000E+00    7  .0000E+00    8  .0000E+00
    9  .0000E+00   10  .0000E+00   11  .0000E+00   12  .0000E+00   13  .0000E+00
14  .0000E+00   15  .0000E+00   16  .0000E+00
   17  .0000E+00   18  .0000E+00   19  .0000E+00   20  .0000E+00   21  .0000E+00
22  .0000E+00   23  .0000E+00   24  .0000E+00
```

```
 *** AERMOD - VERSION 22112  ***   *** C:\Lakes\Project Files\Garvey\Garvey.isc
***        03/04/24
 *** AERMET - VERSION  16216 ***   ***
***        13:00:54

PAGE 405
 *** MODELOPTs:    RegDFAULT  CONC  ELEV  URBAN  ADJ_U*

                   * SOURCE EMISSION RATE SCALARS WHICH VARY DIURNALLY AND BY DAY
OF WEEK (HRDOW) *

 SOURCE ID = L0002375     ; SOURCE TYPE = VOLUME   :
  HOUR   SCALAR   HOUR   SCALAR   HOUR   SCALAR   HOUR   SCALAR   HOUR   SCALAR
HOUR   SCALAR   HOUR   SCALAR   HOUR   SCALAR
 - - - - - - - - - - - - - - - - - - - - - - - - - - - - - - - - - - - - - - - -
- - - - - - - - - - - - - - - - - - - - - - - - -
                                                DAY OF WEEK = WEEKDAY
    1  .0000E+00    2  .0000E+00    3  .0000E+00    4  .0000E+00    5  .0000E+00
6  .0000E+00    7  .1000E+01    8  .1000E+01
    9  .1000E+01   10  .1000E+01   11  .1000E+01   12  .1000E+01   13  .1000E+01
14  .1000E+01   15  .1000E+01   16  .1000E+01
   17  .0000E+00   18  .0000E+00   19  .0000E+00   20  .0000E+00   21  .0000E+00
22  .0000E+00   23  .0000E+00   24  .0000E+00
                                                DAY OF WEEK = SATURDAY
    1  .0000E+00    2  .0000E+00    3  .0000E+00    4  .0000E+00    5  .0000E+00
6  .0000E+00    7  .0000E+00    8  .0000E+00
    9  .0000E+00   10  .0000E+00   11  .0000E+00   12  .0000E+00   13  .0000E+00
14  .0000E+00   15  .0000E+00   16  .0000E+00
   17  .0000E+00   18  .0000E+00   19  .0000E+00   20  .0000E+00   21  .0000E+00
22  .0000E+00   23  .0000E+00   24  .0000E+00
                                                DAY OF WEEK = SUNDAY
    1  .0000E+00    2  .0000E+00    3  .0000E+00    4  .0000E+00    5  .0000E+00
6  .0000E+00    7  .0000E+00    8  .0000E+00
    9  .0000E+00   10  .0000E+00   11  .0000E+00   12  .0000E+00   13  .0000E+00
14  .0000E+00   15  .0000E+00   16  .0000E+00
   17  .0000E+00   18  .0000E+00   19  .0000E+00   20  .0000E+00   21  .0000E+00
22  .0000E+00   23  .0000E+00   24  .0000E+00
```

*** MODELOPTs: RegDFAULT CONC ELEV URBAN ADJ_U*

* SOURCE EMISSION RATE SCALARS WHICH VARY DIURNALLY AND BY DAY OF WEEK (HRDOW) *

SOURCE ID = L0002376 ; SOURCE TYPE = VOLUME :

HOUR	SCALAR	HOUR	SCALAR	HOUR	SCALAR	HOUR	SCALAR	HOUR	SCALAR	HOUR	SCALAR	HOUR	SCALAR	HOUR	SCALAR

DAY OF WEEK = WEEKDAY

1	.0000E+00	2	.0000E+00	3	.0000E+00	4	.0000E+00	5	.0000E+00	6	.0000E+00	7	.1000E+01	8	.1000E+01
9	.1000E+01	10	.1000E+01	11	.1000E+01	12	.1000E+01	13	.1000E+01	14	.1000E+01	15	.1000E+01	16	.1000E+01
17	.0000E+00	18	.0000E+00	19	.0000E+00	20	.0000E+00	21	.0000E+00	22	.0000E+00	23	.0000E+00	24	.0000E+00

DAY OF WEEK = SATURDAY

1	.0000E+00	2	.0000E+00	3	.0000E+00	4	.0000E+00	5	.0000E+00	6	.0000E+00	7	.0000E+00	8	.0000E+00
9	.0000E+00	10	.0000E+00	11	.0000E+00	12	.0000E+00	13	.0000E+00	14	.0000E+00	15	.0000E+00	16	.0000E+00
17	.0000E+00	18	.0000E+00	19	.0000E+00	20	.0000E+00	21	.0000E+00	22	.0000E+00	23	.0000E+00	24	.0000E+00

DAY OF WEEK = SUNDAY

1	.0000E+00	2	.0000E+00	3	.0000E+00	4	.0000E+00	5	.0000E+00	6	.0000E+00	7	.0000E+00	8	.0000E+00
9	.0000E+00	10	.0000E+00	11	.0000E+00	12	.0000E+00	13	.0000E+00	14	.0000E+00	15	.0000E+00	16	.0000E+00
17	.0000E+00	18	.0000E+00	19	.0000E+00	20	.0000E+00	21	.0000E+00	22	.0000E+00	23	.0000E+00	24	.0000E+00

```
 *** AERMOD - VERSION 22112  ***   *** C:\Lakes\Project Files\Garvey\Garvey.isc
***        03/04/24
 *** AERMET - VERSION  16216 ***   ***
***        13:00:54

PAGE 407
 *** MODELOPTs:    RegDFAULT  CONC  ELEV  URBAN  ADJ_U*

                   * SOURCE EMISSION RATE SCALARS WHICH VARY DIURNALLY AND BY DAY
OF WEEK (HRDOW) *

 SOURCE ID = L0002377     ; SOURCE TYPE = VOLUME   :
  HOUR   SCALAR   HOUR   SCALAR   HOUR   SCALAR   HOUR   SCALAR   HOUR   SCALAR
HOUR   SCALAR   HOUR   SCALAR   HOUR   SCALAR
 - - - - - - - - - - - - - - - - - - - - - - - - - - - - - - - - - - - - - - - -
- - - - - - - - - - - - - - - - - - - - - - - - -
                                                DAY OF WEEK = WEEKDAY
    1  .0000E+00    2  .0000E+00    3  .0000E+00    4  .0000E+00    5  .0000E+00
6  .0000E+00    7  .1000E+01    8  .1000E+01
    9  .1000E+01   10  .1000E+01   11  .1000E+01   12  .1000E+01   13  .1000E+01
14  .1000E+01   15  .1000E+01   16  .1000E+01
   17  .0000E+00   18  .0000E+00   19  .0000E+00   20  .0000E+00   21  .0000E+00
22  .0000E+00   23  .0000E+00   24  .0000E+00
                                                DAY OF WEEK = SATURDAY
    1  .0000E+00    2  .0000E+00    3  .0000E+00    4  .0000E+00    5  .0000E+00
6  .0000E+00    7  .0000E+00    8  .0000E+00
    9  .0000E+00   10  .0000E+00   11  .0000E+00   12  .0000E+00   13  .0000E+00
14  .0000E+00   15  .0000E+00   16  .0000E+00
   17  .0000E+00   18  .0000E+00   19  .0000E+00   20  .0000E+00   21  .0000E+00
22  .0000E+00   23  .0000E+00   24  .0000E+00
                                                DAY OF WEEK = SUNDAY
    1  .0000E+00    2  .0000E+00    3  .0000E+00    4  .0000E+00    5  .0000E+00
6  .0000E+00    7  .0000E+00    8  .0000E+00
    9  .0000E+00   10  .0000E+00   11  .0000E+00   12  .0000E+00   13  .0000E+00
14  .0000E+00   15  .0000E+00   16  .0000E+00
   17  .0000E+00   18  .0000E+00   19  .0000E+00   20  .0000E+00   21  .0000E+00
22  .0000E+00   23  .0000E+00   24  .0000E+00
```

*** MODELOPTs: RegDFAULT CONC ELEV URBAN ADJ_U*

* SOURCE EMISSION RATE SCALARS WHICH VARY DIURNALLY AND BY DAY OF WEEK (HRDOW) *

SOURCE ID = L0002378 ; SOURCE TYPE = VOLUME :

HOUR	SCALAR	HOUR	SCALAR	HOUR	SCALAR	HOUR	SCALAR	HOUR	SCALAR	HOUR	SCALAR	HOUR	SCALAR	HOUR	SCALAR

DAY OF WEEK = WEEKDAY

1	.0000E+00	2	.0000E+00	3	.0000E+00	4	.0000E+00	5	.0000E+00	6	.0000E+00	7	.1000E+01	8	.1000E+01
9	.1000E+01	10	.1000E+01	11	.1000E+01	12	.1000E+01	13	.1000E+01	14	.1000E+01	15	.1000E+01	16	.1000E+01
17	.0000E+00	18	.0000E+00	19	.0000E+00	20	.0000E+00	21	.0000E+00	22	.0000E+00	23	.0000E+00	24	.0000E+00

DAY OF WEEK = SATURDAY

1	.0000E+00	2	.0000E+00	3	.0000E+00	4	.0000E+00	5	.0000E+00	6	.0000E+00	7	.0000E+00	8	.0000E+00
9	.0000E+00	10	.0000E+00	11	.0000E+00	12	.0000E+00	13	.0000E+00	14	.0000E+00	15	.0000E+00	16	.0000E+00
17	.0000E+00	18	.0000E+00	19	.0000E+00	20	.0000E+00	21	.0000E+00	22	.0000E+00	23	.0000E+00	24	.0000E+00

DAY OF WEEK = SUNDAY

1	.0000E+00	2	.0000E+00	3	.0000E+00	4	.0000E+00	5	.0000E+00	6	.0000E+00	7	.0000E+00	8	.0000E+00
9	.0000E+00	10	.0000E+00	11	.0000E+00	12	.0000E+00	13	.0000E+00	14	.0000E+00	15	.0000E+00	16	.0000E+00
17	.0000E+00	18	.0000E+00	19	.0000E+00	20	.0000E+00	21	.0000E+00	22	.0000E+00	23	.0000E+00	24	.0000E+00

*** MODELOPTs: RegDFAULT CONC ELEV URBAN ADJ_U*

* SOURCE EMISSION RATE SCALARS WHICH VARY DIURNALLY AND BY DAY OF WEEK (HRDOW) *

SOURCE ID = L0002379 ; SOURCE TYPE = VOLUME :

HOUR	SCALAR	HOUR	SCALAR	HOUR	SCALAR	HOUR	SCALAR	HOUR	SCALAR	HOUR	SCALAR	HOUR	SCALAR	HOUR	SCALAR

DAY OF WEEK = WEEKDAY

1	.0000E+00	2	.0000E+00	3	.0000E+00	4	.0000E+00	5	.0000E+00	6	.0000E+00	7	.1000E+01	8	.1000E+01
9	.1000E+01	10	.1000E+01	11	.1000E+01	12	.1000E+01	13	.1000E+01	14	.1000E+01	15	.1000E+01	16	.1000E+01
17	.0000E+00	18	.0000E+00	19	.0000E+00	20	.0000E+00	21	.0000E+00	22	.0000E+00	23	.0000E+00	24	.0000E+00

DAY OF WEEK = SATURDAY

1	.0000E+00	2	.0000E+00	3	.0000E+00	4	.0000E+00	5	.0000E+00	6	.0000E+00	7	.0000E+00	8	.0000E+00
9	.0000E+00	10	.0000E+00	11	.0000E+00	12	.0000E+00	13	.0000E+00	14	.0000E+00	15	.0000E+00	16	.0000E+00
17	.0000E+00	18	.0000E+00	19	.0000E+00	20	.0000E+00	21	.0000E+00	22	.0000E+00	23	.0000E+00	24	.0000E+00

DAY OF WEEK = SUNDAY

1	.0000E+00	2	.0000E+00	3	.0000E+00	4	.0000E+00	5	.0000E+00	6	.0000E+00	7	.0000E+00	8	.0000E+00
9	.0000E+00	10	.0000E+00	11	.0000E+00	12	.0000E+00	13	.0000E+00	14	.0000E+00	15	.0000E+00	16	.0000E+00
17	.0000E+00	18	.0000E+00	19	.0000E+00	20	.0000E+00	21	.0000E+00	22	.0000E+00	23	.0000E+00	24	.0000E+00

*** MODELOPTs: RegDFAULT CONC ELEV URBAN ADJ_U*

* SOURCE EMISSION RATE SCALARS WHICH VARY DIURNALLY AND BY DAY OF WEEK (HRDOW) *

SOURCE ID = L0002380 ; SOURCE TYPE = VOLUME :

HOUR	SCALAR	HOUR	SCALAR	HOUR	SCALAR	HOUR	SCALAR	HOUR	SCALAR	HOUR	SCALAR	HOUR	SCALAR	HOUR	SCALAR

DAY OF WEEK = WEEKDAY

1	.0000E+00	2	.0000E+00	3	.0000E+00	4	.0000E+00	5	.0000E+00	6	.0000E+00	7	.1000E+01	8	.1000E+01
9	.1000E+01	10	.1000E+01	11	.1000E+01	12	.1000E+01	13	.1000E+01	14	.1000E+01	15	.1000E+01	16	.1000E+01
17	.0000E+00	18	.0000E+00	19	.0000E+00	20	.0000E+00	21	.0000E+00	22	.0000E+00	23	.0000E+00	24	.0000E+00

DAY OF WEEK = SATURDAY

1	.0000E+00	2	.0000E+00	3	.0000E+00	4	.0000E+00	5	.0000E+00	6	.0000E+00	7	.0000E+00	8	.0000E+00
9	.0000E+00	10	.0000E+00	11	.0000E+00	12	.0000E+00	13	.0000E+00	14	.0000E+00	15	.0000E+00	16	.0000E+00
17	.0000E+00	18	.0000E+00	19	.0000E+00	20	.0000E+00	21	.0000E+00	22	.0000E+00	23	.0000E+00	24	.0000E+00

DAY OF WEEK = SUNDAY

1	.0000E+00	2	.0000E+00	3	.0000E+00	4	.0000E+00	5	.0000E+00	6	.0000E+00	7	.0000E+00	8	.0000E+00
9	.0000E+00	10	.0000E+00	11	.0000E+00	12	.0000E+00	13	.0000E+00	14	.0000E+00	15	.0000E+00	16	.0000E+00
17	.0000E+00	18	.0000E+00	19	.0000E+00	20	.0000E+00	21	.0000E+00	22	.0000E+00	23	.0000E+00	24	.0000E+00

*** MODELOPTs: RegDFAULT CONC ELEV URBAN ADJ_U*

* SOURCE EMISSION RATE SCALARS WHICH VARY DIURNALLY AND BY DAY OF WEEK (HRDOW) *

SOURCE ID = L0002381 ; SOURCE TYPE = VOLUME :

HOUR	SCALAR	HOUR	SCALAR	HOUR	SCALAR	HOUR	SCALAR	HOUR	SCALAR	HOUR	SCALAR	HOUR	SCALAR	HOUR	SCALAR

DAY OF WEEK = WEEKDAY

1	.0000E+00	2	.0000E+00	3	.0000E+00	4	.0000E+00	5	.0000E+00	6	.0000E+00	7	.1000E+01	8	.1000E+01
9	.1000E+01	10	.1000E+01	11	.1000E+01	12	.1000E+01	13	.1000E+01	14	.1000E+01	15	.1000E+01	16	.1000E+01
17	.0000E+00	18	.0000E+00	19	.0000E+00	20	.0000E+00	21	.0000E+00	22	.0000E+00	23	.0000E+00	24	.0000E+00

DAY OF WEEK = SATURDAY

1	.0000E+00	2	.0000E+00	3	.0000E+00	4	.0000E+00	5	.0000E+00	6	.0000E+00	7	.0000E+00	8	.0000E+00
9	.0000E+00	10	.0000E+00	11	.0000E+00	12	.0000E+00	13	.0000E+00	14	.0000E+00	15	.0000E+00	16	.0000E+00
17	.0000E+00	18	.0000E+00	19	.0000E+00	20	.0000E+00	21	.0000E+00	22	.0000E+00	23	.0000E+00	24	.0000E+00

DAY OF WEEK = SUNDAY

1	.0000E+00	2	.0000E+00	3	.0000E+00	4	.0000E+00	5	.0000E+00	6	.0000E+00	7	.0000E+00	8	.0000E+00
9	.0000E+00	10	.0000E+00	11	.0000E+00	12	.0000E+00	13	.0000E+00	14	.0000E+00	15	.0000E+00	16	.0000E+00
17	.0000E+00	18	.0000E+00	19	.0000E+00	20	.0000E+00	21	.0000E+00	22	.0000E+00	23	.0000E+00	24	.0000E+00

*** MODELOPTs: RegDFAULT CONC ELEV URBAN ADJ_U*

* SOURCE EMISSION RATE SCALARS WHICH VARY DIURNALLY AND BY DAY OF WEEK (HRDOW) *

SOURCE ID = L0002382 ; SOURCE TYPE = VOLUME :

HOUR	SCALAR	HOUR	SCALAR	HOUR	SCALAR	HOUR	SCALAR	HOUR	SCALAR	HOUR	SCALAR	HOUR	SCALAR	HOUR	SCALAR

DAY OF WEEK = WEEKDAY

1	.0000E+00	2	.0000E+00	3	.0000E+00	4	.0000E+00	5	.0000E+00	6	.0000E+00	7	.1000E+01	8	.1000E+01
9	.1000E+01	10	.1000E+01	11	.1000E+01	12	.1000E+01	13	.1000E+01	14	.1000E+01	15	.1000E+01	16	.1000E+01
17	.0000E+00	18	.0000E+00	19	.0000E+00	20	.0000E+00	21	.0000E+00	22	.0000E+00	23	.0000E+00	24	.0000E+00

DAY OF WEEK = SATURDAY

1	.0000E+00	2	.0000E+00	3	.0000E+00	4	.0000E+00	5	.0000E+00	6	.0000E+00	7	.0000E+00	8	.0000E+00
9	.0000E+00	10	.0000E+00	11	.0000E+00	12	.0000E+00	13	.0000E+00	14	.0000E+00	15	.0000E+00	16	.0000E+00
17	.0000E+00	18	.0000E+00	19	.0000E+00	20	.0000E+00	21	.0000E+00	22	.0000E+00	23	.0000E+00	24	.0000E+00

DAY OF WEEK = SUNDAY

1	.0000E+00	2	.0000E+00	3	.0000E+00	4	.0000E+00	5	.0000E+00	6	.0000E+00	7	.0000E+00	8	.0000E+00
9	.0000E+00	10	.0000E+00	11	.0000E+00	12	.0000E+00	13	.0000E+00	14	.0000E+00	15	.0000E+00	16	.0000E+00
17	.0000E+00	18	.0000E+00	19	.0000E+00	20	.0000E+00	21	.0000E+00	22	.0000E+00	23	.0000E+00	24	.0000E+00

*** MODELOPTs: RegDFAULT CONC ELEV URBAN ADJ_U*

* SOURCE EMISSION RATE SCALARS WHICH VARY DIURNALLY AND BY DAY OF WEEK (HRDOW) *

SOURCE ID = L0002383 ; SOURCE TYPE = VOLUME :

HOUR	SCALAR	HOUR	SCALAR	HOUR	SCALAR	HOUR	SCALAR	HOUR	SCALAR	HOUR	SCALAR	HOUR	SCALAR	HOUR	SCALAR

DAY OF WEEK = WEEKDAY

1	.0000E+00	2	.0000E+00	3	.0000E+00	4	.0000E+00	5	.0000E+00	6	.0000E+00	7	.1000E+01	8	.1000E+01
9	.1000E+01	10	.1000E+01	11	.1000E+01	12	.1000E+01	13	.1000E+01	14	.1000E+01	15	.1000E+01	16	.1000E+01
17	.0000E+00	18	.0000E+00	19	.0000E+00	20	.0000E+00	21	.0000E+00	22	.0000E+00	23	.0000E+00	24	.0000E+00

DAY OF WEEK = SATURDAY

1	.0000E+00	2	.0000E+00	3	.0000E+00	4	.0000E+00	5	.0000E+00	6	.0000E+00	7	.0000E+00	8	.0000E+00
9	.0000E+00	10	.0000E+00	11	.0000E+00	12	.0000E+00	13	.0000E+00	14	.0000E+00	15	.0000E+00	16	.0000E+00
17	.0000E+00	18	.0000E+00	19	.0000E+00	20	.0000E+00	21	.0000E+00	22	.0000E+00	23	.0000E+00	24	.0000E+00

DAY OF WEEK = SUNDAY

1	.0000E+00	2	.0000E+00	3	.0000E+00	4	.0000E+00	5	.0000E+00	6	.0000E+00	7	.0000E+00	8	.0000E+00
9	.0000E+00	10	.0000E+00	11	.0000E+00	12	.0000E+00	13	.0000E+00	14	.0000E+00	15	.0000E+00	16	.0000E+00
17	.0000E+00	18	.0000E+00	19	.0000E+00	20	.0000E+00	21	.0000E+00	22	.0000E+00	23	.0000E+00	24	.0000E+00

```
 *** AERMOD - VERSION 22112  ***   *** C:\Lakes\Project Files\Garvey\Garvey.isc
***        03/04/24
 *** AERMET - VERSION  16216 ***   ***
***        13:00:54

PAGE 414
 *** MODELOPTs:    RegDFAULT  CONC  ELEV  URBAN  ADJ_U*

                   * SOURCE EMISSION RATE SCALARS WHICH VARY DIURNALLY AND BY DAY
OF WEEK (HRDOW) *

 SOURCE ID = L0002384     ; SOURCE TYPE = VOLUME   :
  HOUR   SCALAR   HOUR   SCALAR   HOUR   SCALAR   HOUR   SCALAR   HOUR   SCALAR
HOUR   SCALAR   HOUR   SCALAR   HOUR   SCALAR
 - - - - - - - - - - - - - - - - - - - - - - - - - - - - - - - - - - - - - - - -
- - - - - - - - - - - - - - - - - - - - - - - - -
                                                DAY OF WEEK = WEEKDAY
    1  .0000E+00    2  .0000E+00    3  .0000E+00    4  .0000E+00    5  .0000E+00
6  .0000E+00    7  .1000E+01    8  .1000E+01
    9  .1000E+01   10  .1000E+01   11  .1000E+01   12  .1000E+01   13  .1000E+01
14  .1000E+01   15  .1000E+01   16  .1000E+01
   17  .0000E+00   18  .0000E+00   19  .0000E+00   20  .0000E+00   21  .0000E+00
22  .0000E+00   23  .0000E+00   24  .0000E+00
                                                DAY OF WEEK = SATURDAY
    1  .0000E+00    2  .0000E+00    3  .0000E+00    4  .0000E+00    5  .0000E+00
6  .0000E+00    7  .0000E+00    8  .0000E+00
    9  .0000E+00   10  .0000E+00   11  .0000E+00   12  .0000E+00   13  .0000E+00
14  .0000E+00   15  .0000E+00   16  .0000E+00
   17  .0000E+00   18  .0000E+00   19  .0000E+00   20  .0000E+00   21  .0000E+00
22  .0000E+00   23  .0000E+00   24  .0000E+00
                                                DAY OF WEEK = SUNDAY
    1  .0000E+00    2  .0000E+00    3  .0000E+00    4  .0000E+00    5  .0000E+00
6  .0000E+00    7  .0000E+00    8  .0000E+00
    9  .0000E+00   10  .0000E+00   11  .0000E+00   12  .0000E+00   13  .0000E+00
14  .0000E+00   15  .0000E+00   16  .0000E+00
   17  .0000E+00   18  .0000E+00   19  .0000E+00   20  .0000E+00   21  .0000E+00
22  .0000E+00   23  .0000E+00   24  .0000E+00
```

```
 *** AERMOD - VERSION 22112  ***   *** C:\Lakes\Project Files\Garvey\Garvey.isc
***        03/04/24
 *** AERMET - VERSION  16216 ***   ***
***        13:00:54

PAGE 415
 *** MODELOPTs:    RegDFAULT  CONC  ELEV  URBAN  ADJ_U*

                   * SOURCE EMISSION RATE SCALARS WHICH VARY DIURNALLY AND BY DAY
OF WEEK (HRDOW) *

 SOURCE ID = L0002385     ; SOURCE TYPE = VOLUME   :
  HOUR   SCALAR   HOUR   SCALAR   HOUR   SCALAR   HOUR   SCALAR   HOUR   SCALAR
HOUR   SCALAR   HOUR   SCALAR   HOUR   SCALAR
 - - - - - - - - - - - - - - - - - - - - - - - - - - - - - - - - - - - - - - - -
- - - - - - - - - - - - - - - - - - - - - - - - -
                                                DAY OF WEEK = WEEKDAY
    1  .0000E+00    2  .0000E+00    3  .0000E+00    4  .0000E+00    5  .0000E+00
6  .0000E+00    7  .1000E+01    8  .1000E+01
    9  .1000E+01   10  .1000E+01   11  .1000E+01   12  .1000E+01   13  .1000E+01
14  .1000E+01   15  .1000E+01   16  .1000E+01
   17  .0000E+00   18  .0000E+00   19  .0000E+00   20  .0000E+00   21  .0000E+00
22  .0000E+00   23  .0000E+00   24  .0000E+00
                                                DAY OF WEEK = SATURDAY
    1  .0000E+00    2  .0000E+00    3  .0000E+00    4  .0000E+00    5  .0000E+00
6  .0000E+00    7  .0000E+00    8  .0000E+00
    9  .0000E+00   10  .0000E+00   11  .0000E+00   12  .0000E+00   13  .0000E+00
14  .0000E+00   15  .0000E+00   16  .0000E+00
   17  .0000E+00   18  .0000E+00   19  .0000E+00   20  .0000E+00   21  .0000E+00
22  .0000E+00   23  .0000E+00   24  .0000E+00
                                                DAY OF WEEK = SUNDAY
    1  .0000E+00    2  .0000E+00    3  .0000E+00    4  .0000E+00    5  .0000E+00
6  .0000E+00    7  .0000E+00    8  .0000E+00
    9  .0000E+00   10  .0000E+00   11  .0000E+00   12  .0000E+00   13  .0000E+00
14  .0000E+00   15  .0000E+00   16  .0000E+00
   17  .0000E+00   18  .0000E+00   19  .0000E+00   20  .0000E+00   21  .0000E+00
22  .0000E+00   23  .0000E+00   24  .0000E+00
```

*** MODELOPTs: RegDFAULT CONC ELEV URBAN ADJ_U*

* SOURCE EMISSION RATE SCALARS WHICH VARY DIURNALLY AND BY DAY OF WEEK (HRDOW) *

SOURCE ID = L0002386 ; SOURCE TYPE = VOLUME :

HOUR	SCALAR	HOUR	SCALAR	HOUR	SCALAR	HOUR	SCALAR	HOUR	SCALAR	HOUR	SCALAR	HOUR	SCALAR	HOUR	SCALAR

DAY OF WEEK = WEEKDAY

1	.0000E+00	2	.0000E+00	3	.0000E+00	4	.0000E+00	5	.0000E+00	6	.0000E+00	7	.1000E+01	8	.1000E+01
9	.1000E+01	10	.1000E+01	11	.1000E+01	12	.1000E+01	13	.1000E+01	14	.1000E+01	15	.1000E+01	16	.1000E+01
17	.0000E+00	18	.0000E+00	19	.0000E+00	20	.0000E+00	21	.0000E+00	22	.0000E+00	23	.0000E+00	24	.0000E+00

DAY OF WEEK = SATURDAY

1	.0000E+00	2	.0000E+00	3	.0000E+00	4	.0000E+00	5	.0000E+00	6	.0000E+00	7	.0000E+00	8	.0000E+00
9	.0000E+00	10	.0000E+00	11	.0000E+00	12	.0000E+00	13	.0000E+00	14	.0000E+00	15	.0000E+00	16	.0000E+00
17	.0000E+00	18	.0000E+00	19	.0000E+00	20	.0000E+00	21	.0000E+00	22	.0000E+00	23	.0000E+00	24	.0000E+00

DAY OF WEEK = SUNDAY

1	.0000E+00	2	.0000E+00	3	.0000E+00	4	.0000E+00	5	.0000E+00	6	.0000E+00	7	.0000E+00	8	.0000E+00
9	.0000E+00	10	.0000E+00	11	.0000E+00	12	.0000E+00	13	.0000E+00	14	.0000E+00	15	.0000E+00	16	.0000E+00
17	.0000E+00	18	.0000E+00	19	.0000E+00	20	.0000E+00	21	.0000E+00	22	.0000E+00	23	.0000E+00	24	.0000E+00

```
 *** AERMOD - VERSION 22112  ***   *** C:\Lakes\Project Files\Garvey\Garvey.isc
***        03/04/24
 *** AERMET - VERSION  16216 ***   ***
***        13:00:54

PAGE 417
 *** MODELOPTs:    RegDFAULT  CONC  ELEV  URBAN  ADJ_U*

                   * SOURCE EMISSION RATE SCALARS WHICH VARY DIURNALLY AND BY DAY
OF WEEK (HRDOW) *

 SOURCE ID = L0002387     ; SOURCE TYPE = VOLUME   :
  HOUR   SCALAR   HOUR   SCALAR   HOUR   SCALAR   HOUR   SCALAR   HOUR   SCALAR
HOUR   SCALAR   HOUR   SCALAR   HOUR   SCALAR
 - - - - - - - - - - - - - - - - - - - - - - - - - - - - - - - - - - - - - - - -
- - - - - - - - - - - - - - - - - - - - - - - - - -
                                                DAY OF WEEK = WEEKDAY
    1  .0000E+00    2  .0000E+00    3  .0000E+00    4  .0000E+00    5  .0000E+00
6  .0000E+00    7  .1000E+01    8  .1000E+01
    9  .1000E+01   10  .1000E+01   11  .1000E+01   12  .1000E+01   13  .1000E+01
14  .1000E+01   15  .1000E+01   16  .1000E+01
   17  .0000E+00   18  .0000E+00   19  .0000E+00   20  .0000E+00   21  .0000E+00
22  .0000E+00   23  .0000E+00   24  .0000E+00
                                                DAY OF WEEK = SATURDAY
    1  .0000E+00    2  .0000E+00    3  .0000E+00    4  .0000E+00    5  .0000E+00
6  .0000E+00    7  .0000E+00    8  .0000E+00
    9  .0000E+00   10  .0000E+00   11  .0000E+00   12  .0000E+00   13  .0000E+00
14  .0000E+00   15  .0000E+00   16  .0000E+00
   17  .0000E+00   18  .0000E+00   19  .0000E+00   20  .0000E+00   21  .0000E+00
22  .0000E+00   23  .0000E+00   24  .0000E+00
                                                DAY OF WEEK = SUNDAY
    1  .0000E+00    2  .0000E+00    3  .0000E+00    4  .0000E+00    5  .0000E+00
6  .0000E+00    7  .0000E+00    8  .0000E+00
    9  .0000E+00   10  .0000E+00   11  .0000E+00   12  .0000E+00   13  .0000E+00
14  .0000E+00   15  .0000E+00   16  .0000E+00
   17  .0000E+00   18  .0000E+00   19  .0000E+00   20  .0000E+00   21  .0000E+00
22  .0000E+00   23  .0000E+00   24  .0000E+00
```

*** MODELOPTs: RegDFAULT CONC ELEV URBAN ADJ_U*

* SOURCE EMISSION RATE SCALARS WHICH VARY DIURNALLY AND BY DAY OF WEEK (HRDOW) *

SOURCE ID = L0002388 ; SOURCE TYPE = VOLUME :

HOUR	SCALAR	HOUR	SCALAR	HOUR	SCALAR	HOUR	SCALAR	HOUR	SCALAR	HOUR	SCALAR	HOUR	SCALAR	HOUR	SCALAR

DAY OF WEEK = WEEKDAY

1	.0000E+00	2	.0000E+00	3	.0000E+00	4	.0000E+00	5	.0000E+00	6	.0000E+00	7	.1000E+01	8	.1000E+01
9	.1000E+01	10	.1000E+01	11	.1000E+01	12	.1000E+01	13	.1000E+01	14	.1000E+01	15	.1000E+01	16	.1000E+01
17	.0000E+00	18	.0000E+00	19	.0000E+00	20	.0000E+00	21	.0000E+00	22	.0000E+00	23	.0000E+00	24	.0000E+00

DAY OF WEEK = SATURDAY

1	.0000E+00	2	.0000E+00	3	.0000E+00	4	.0000E+00	5	.0000E+00	6	.0000E+00	7	.0000E+00	8	.0000E+00
9	.0000E+00	10	.0000E+00	11	.0000E+00	12	.0000E+00	13	.0000E+00	14	.0000E+00	15	.0000E+00	16	.0000E+00
17	.0000E+00	18	.0000E+00	19	.0000E+00	20	.0000E+00	21	.0000E+00	22	.0000E+00	23	.0000E+00	24	.0000E+00

DAY OF WEEK = SUNDAY

1	.0000E+00	2	.0000E+00	3	.0000E+00	4	.0000E+00	5	.0000E+00	6	.0000E+00	7	.0000E+00	8	.0000E+00
9	.0000E+00	10	.0000E+00	11	.0000E+00	12	.0000E+00	13	.0000E+00	14	.0000E+00	15	.0000E+00	16	.0000E+00
17	.0000E+00	18	.0000E+00	19	.0000E+00	20	.0000E+00	21	.0000E+00	22	.0000E+00	23	.0000E+00	24	.0000E+00

*** MODELOPTs: RegDFAULT CONC ELEV URBAN ADJ_U*

* SOURCE EMISSION RATE SCALARS WHICH VARY DIURNALLY AND BY DAY OF WEEK (HRDOW) *

SOURCE ID = L0002389 ; SOURCE TYPE = VOLUME :

HOUR	SCALAR	HOUR	SCALAR	HOUR	SCALAR	HOUR	SCALAR	HOUR	SCALAR	HOUR	SCALAR	HOUR	SCALAR	HOUR	SCALAR

DAY OF WEEK = WEEKDAY

1	.0000E+00	2	.0000E+00	3	.0000E+00	4	.0000E+00	5	.0000E+00	6	.0000E+00	7	.1000E+01	8	.1000E+01
9	.1000E+01	10	.1000E+01	11	.1000E+01	12	.1000E+01	13	.1000E+01	14	.1000E+01	15	.1000E+01	16	.1000E+01
17	.0000E+00	18	.0000E+00	19	.0000E+00	20	.0000E+00	21	.0000E+00	22	.0000E+00	23	.0000E+00	24	.0000E+00

DAY OF WEEK = SATURDAY

1	.0000E+00	2	.0000E+00	3	.0000E+00	4	.0000E+00	5	.0000E+00	6	.0000E+00	7	.0000E+00	8	.0000E+00
9	.0000E+00	10	.0000E+00	11	.0000E+00	12	.0000E+00	13	.0000E+00	14	.0000E+00	15	.0000E+00	16	.0000E+00
17	.0000E+00	18	.0000E+00	19	.0000E+00	20	.0000E+00	21	.0000E+00	22	.0000E+00	23	.0000E+00	24	.0000E+00

DAY OF WEEK = SUNDAY

1	.0000E+00	2	.0000E+00	3	.0000E+00	4	.0000E+00	5	.0000E+00	6	.0000E+00	7	.0000E+00	8	.0000E+00
9	.0000E+00	10	.0000E+00	11	.0000E+00	12	.0000E+00	13	.0000E+00	14	.0000E+00	15	.0000E+00	16	.0000E+00
17	.0000E+00	18	.0000E+00	19	.0000E+00	20	.0000E+00	21	.0000E+00	22	.0000E+00	23	.0000E+00	24	.0000E+00

```
 *** AERMOD - VERSION 22112  ***   *** C:\Lakes\Project Files\Garvey\Garvey.isc
***        03/04/24
 *** AERMET - VERSION  16216 ***   ***
***        13:00:54

PAGE 420
 *** MODELOPTs:    RegDFAULT  CONC  ELEV  URBAN  ADJ_U*

                   * SOURCE EMISSION RATE SCALARS WHICH VARY DIURNALLY AND BY DAY
OF WEEK (HRDOW) *

 SOURCE ID = L0002390     ; SOURCE TYPE = VOLUME   :
  HOUR   SCALAR   HOUR   SCALAR   HOUR   SCALAR   HOUR   SCALAR   HOUR   SCALAR
HOUR   SCALAR   HOUR   SCALAR   HOUR   SCALAR
 - - - - - - - - - - - - - - - - - - - - - - - - - - - - - - - - - - - - - - - -
- - - - - - - - - - - - - - - - - - - - - - - - -
                                                DAY OF WEEK = WEEKDAY
    1  .0000E+00    2  .0000E+00    3  .0000E+00    4  .0000E+00    5  .0000E+00
6  .0000E+00    7  .1000E+01    8  .1000E+01
    9  .1000E+01   10  .1000E+01   11  .1000E+01   12  .1000E+01   13  .1000E+01
14  .1000E+01   15  .1000E+01   16  .1000E+01
   17  .0000E+00   18  .0000E+00   19  .0000E+00   20  .0000E+00   21  .0000E+00
22  .0000E+00   23  .0000E+00   24  .0000E+00
                                                DAY OF WEEK = SATURDAY
    1  .0000E+00    2  .0000E+00    3  .0000E+00    4  .0000E+00    5  .0000E+00
6  .0000E+00    7  .0000E+00    8  .0000E+00
    9  .0000E+00   10  .0000E+00   11  .0000E+00   12  .0000E+00   13  .0000E+00
14  .0000E+00   15  .0000E+00   16  .0000E+00
   17  .0000E+00   18  .0000E+00   19  .0000E+00   20  .0000E+00   21  .0000E+00
22  .0000E+00   23  .0000E+00   24  .0000E+00
                                                DAY OF WEEK = SUNDAY
    1  .0000E+00    2  .0000E+00    3  .0000E+00    4  .0000E+00    5  .0000E+00
6  .0000E+00    7  .0000E+00    8  .0000E+00
    9  .0000E+00   10  .0000E+00   11  .0000E+00   12  .0000E+00   13  .0000E+00
14  .0000E+00   15  .0000E+00   16  .0000E+00
   17  .0000E+00   18  .0000E+00   19  .0000E+00   20  .0000E+00   21  .0000E+00
22  .0000E+00   23  .0000E+00   24  .0000E+00
```

```
 *** AERMOD - VERSION 22112  ***   *** C:\Lakes\Project Files\Garvey\Garvey.isc
***        03/04/24
 *** AERMET - VERSION  16216 ***   ***
***        13:00:54

PAGE 421
 *** MODELOPTs:    RegDFAULT  CONC  ELEV  URBAN  ADJ_U*

                   * SOURCE EMISSION RATE SCALARS WHICH VARY DIURNALLY AND BY DAY
OF WEEK (HRDOW) *

 SOURCE ID = L0002391     ; SOURCE TYPE = VOLUME   :
  HOUR   SCALAR   HOUR   SCALAR   HOUR   SCALAR   HOUR   SCALAR   HOUR   SCALAR
HOUR   SCALAR   HOUR   SCALAR   HOUR   SCALAR
 - - - - - - - - - - - - - - - - - - - - - - - - - - - - - - - - - - - - - - - -
- - - - - - - - - - - - - - - - - - - - - - - - - -
                                                DAY OF WEEK = WEEKDAY
    1  .0000E+00    2  .0000E+00    3  .0000E+00    4  .0000E+00    5  .0000E+00
6  .0000E+00    7  .1000E+01    8  .1000E+01
    9  .1000E+01   10  .1000E+01   11  .1000E+01   12  .1000E+01   13  .1000E+01
14  .1000E+01   15  .1000E+01   16  .1000E+01
   17  .0000E+00   18  .0000E+00   19  .0000E+00   20  .0000E+00   21  .0000E+00
22  .0000E+00   23  .0000E+00   24  .0000E+00
                                                DAY OF WEEK = SATURDAY
    1  .0000E+00    2  .0000E+00    3  .0000E+00    4  .0000E+00    5  .0000E+00
6  .0000E+00    7  .0000E+00    8  .0000E+00
    9  .0000E+00   10  .0000E+00   11  .0000E+00   12  .0000E+00   13  .0000E+00
14  .0000E+00   15  .0000E+00   16  .0000E+00
   17  .0000E+00   18  .0000E+00   19  .0000E+00   20  .0000E+00   21  .0000E+00
22  .0000E+00   23  .0000E+00   24  .0000E+00
                                                DAY OF WEEK = SUNDAY
    1  .0000E+00    2  .0000E+00    3  .0000E+00    4  .0000E+00    5  .0000E+00
6  .0000E+00    7  .0000E+00    8  .0000E+00
    9  .0000E+00   10  .0000E+00   11  .0000E+00   12  .0000E+00   13  .0000E+00
14  .0000E+00   15  .0000E+00   16  .0000E+00
   17  .0000E+00   18  .0000E+00   19  .0000E+00   20  .0000E+00   21  .0000E+00
22  .0000E+00   23  .0000E+00   24  .0000E+00
```

```
 *** AERMOD - VERSION 22112  ***   *** C:\Lakes\Project Files\Garvey\Garvey.isc
***        03/04/24
 *** AERMET - VERSION  16216 ***   ***
***        13:00:54

PAGE 422
 *** MODELOPTs:    RegDFAULT  CONC  ELEV  URBAN  ADJ_U*

                   * SOURCE EMISSION RATE SCALARS WHICH VARY DIURNALLY AND BY DAY
OF WEEK (HRDOW) *

 SOURCE ID = L0002392     ; SOURCE TYPE = VOLUME   :
  HOUR   SCALAR   HOUR   SCALAR   HOUR   SCALAR   HOUR   SCALAR   HOUR   SCALAR
HOUR   SCALAR   HOUR   SCALAR   HOUR   SCALAR
 - - - - - - - - - - - - - - - - - - - - - - - - - - - - - - - - - - - - - - - -
- - - - - - - - - - - - - - - - - - - - - - - - - -
                                                DAY OF WEEK = WEEKDAY
    1  .0000E+00    2  .0000E+00    3  .0000E+00    4  .0000E+00    5  .0000E+00
6  .0000E+00    7  .1000E+01    8  .1000E+01
    9  .1000E+01   10  .1000E+01   11  .1000E+01   12  .1000E+01   13  .1000E+01
14  .1000E+01   15  .1000E+01   16  .1000E+01
   17  .0000E+00   18  .0000E+00   19  .0000E+00   20  .0000E+00   21  .0000E+00
22  .0000E+00   23  .0000E+00   24  .0000E+00
                                                DAY OF WEEK = SATURDAY
    1  .0000E+00    2  .0000E+00    3  .0000E+00    4  .0000E+00    5  .0000E+00
6  .0000E+00    7  .0000E+00    8  .0000E+00
    9  .0000E+00   10  .0000E+00   11  .0000E+00   12  .0000E+00   13  .0000E+00
14  .0000E+00   15  .0000E+00   16  .0000E+00
   17  .0000E+00   18  .0000E+00   19  .0000E+00   20  .0000E+00   21  .0000E+00
22  .0000E+00   23  .0000E+00   24  .0000E+00
                                                DAY OF WEEK = SUNDAY
    1  .0000E+00    2  .0000E+00    3  .0000E+00    4  .0000E+00    5  .0000E+00
6  .0000E+00    7  .0000E+00    8  .0000E+00
    9  .0000E+00   10  .0000E+00   11  .0000E+00   12  .0000E+00   13  .0000E+00
14  .0000E+00   15  .0000E+00   16  .0000E+00
   17  .0000E+00   18  .0000E+00   19  .0000E+00   20  .0000E+00   21  .0000E+00
22  .0000E+00   23  .0000E+00   24  .0000E+00
```

```
 *** AERMOD - VERSION 22112  ***   *** C:\Lakes\Project Files\Garvey\Garvey.isc
***        03/04/24
 *** AERMET - VERSION  16216 ***   ***
***        13:00:54

PAGE 423
 *** MODELOPTs:    RegDFAULT  CONC  ELEV  URBAN  ADJ_U*

                   * SOURCE EMISSION RATE SCALARS WHICH VARY DIURNALLY AND BY DAY
OF WEEK (HRDOW) *

 SOURCE ID = L0002393     ; SOURCE TYPE = VOLUME   :
  HOUR   SCALAR   HOUR   SCALAR   HOUR   SCALAR   HOUR   SCALAR   HOUR   SCALAR
HOUR   SCALAR   HOUR   SCALAR   HOUR   SCALAR
 - - - - - - - - - - - - - - - - - - - - - - - - - - - - - - - - - - - - - - - -
- - - - - - - - - - - - - - - - - - - - - - - - -
                                                DAY OF WEEK = WEEKDAY
    1  .0000E+00    2  .0000E+00    3  .0000E+00    4  .0000E+00    5  .0000E+00
6  .0000E+00    7  .1000E+01    8  .1000E+01
    9  .1000E+01   10  .1000E+01   11  .1000E+01   12  .1000E+01   13  .1000E+01
14  .1000E+01   15  .1000E+01   16  .1000E+01
   17  .0000E+00   18  .0000E+00   19  .0000E+00   20  .0000E+00   21  .0000E+00
22  .0000E+00   23  .0000E+00   24  .0000E+00
                                                DAY OF WEEK = SATURDAY
    1  .0000E+00    2  .0000E+00    3  .0000E+00    4  .0000E+00    5  .0000E+00
6  .0000E+00    7  .0000E+00    8  .0000E+00
    9  .0000E+00   10  .0000E+00   11  .0000E+00   12  .0000E+00   13  .0000E+00
14  .0000E+00   15  .0000E+00   16  .0000E+00
   17  .0000E+00   18  .0000E+00   19  .0000E+00   20  .0000E+00   21  .0000E+00
22  .0000E+00   23  .0000E+00   24  .0000E+00
                                                DAY OF WEEK = SUNDAY
    1  .0000E+00    2  .0000E+00    3  .0000E+00    4  .0000E+00    5  .0000E+00
6  .0000E+00    7  .0000E+00    8  .0000E+00
    9  .0000E+00   10  .0000E+00   11  .0000E+00   12  .0000E+00   13  .0000E+00
14  .0000E+00   15  .0000E+00   16  .0000E+00
   17  .0000E+00   18  .0000E+00   19  .0000E+00   20  .0000E+00   21  .0000E+00
22  .0000E+00   23  .0000E+00   24  .0000E+00
```

*** MODELOPTs: RegDFAULT CONC ELEV URBAN ADJ_U*

* SOURCE EMISSION RATE SCALARS WHICH VARY DIURNALLY AND BY DAY OF WEEK (HRDOW) *

SOURCE ID = L0002394 ; SOURCE TYPE = VOLUME :

HOUR	SCALAR	HOUR	SCALAR	HOUR	SCALAR	HOUR	SCALAR	HOUR	SCALAR	HOUR	SCALAR	HOUR	SCALAR	HOUR	SCALAR

DAY OF WEEK = WEEKDAY

1	.0000E+00	2	.0000E+00	3	.0000E+00	4	.0000E+00	5	.0000E+00	6	.0000E+00	7	.1000E+01	8	.1000E+01
9	.1000E+01	10	.1000E+01	11	.1000E+01	12	.1000E+01	13	.1000E+01	14	.1000E+01	15	.1000E+01	16	.1000E+01
17	.0000E+00	18	.0000E+00	19	.0000E+00	20	.0000E+00	21	.0000E+00	22	.0000E+00	23	.0000E+00	24	.0000E+00

DAY OF WEEK = SATURDAY

1	.0000E+00	2	.0000E+00	3	.0000E+00	4	.0000E+00	5	.0000E+00	6	.0000E+00	7	.0000E+00	8	.0000E+00
9	.0000E+00	10	.0000E+00	11	.0000E+00	12	.0000E+00	13	.0000E+00	14	.0000E+00	15	.0000E+00	16	.0000E+00
17	.0000E+00	18	.0000E+00	19	.0000E+00	20	.0000E+00	21	.0000E+00	22	.0000E+00	23	.0000E+00	24	.0000E+00

DAY OF WEEK = SUNDAY

1	.0000E+00	2	.0000E+00	3	.0000E+00	4	.0000E+00	5	.0000E+00	6	.0000E+00	7	.0000E+00	8	.0000E+00
9	.0000E+00	10	.0000E+00	11	.0000E+00	12	.0000E+00	13	.0000E+00	14	.0000E+00	15	.0000E+00	16	.0000E+00
17	.0000E+00	18	.0000E+00	19	.0000E+00	20	.0000E+00	21	.0000E+00	22	.0000E+00	23	.0000E+00	24	.0000E+00

```
 *** AERMOD - VERSION 22112  ***   *** C:\Lakes\Project Files\Garvey\Garvey.isc
***        03/04/24
 *** AERMET - VERSION  16216 ***   ***
***        13:00:54

PAGE 425
 *** MODELOPTs:    RegDFAULT  CONC  ELEV  URBAN  ADJ_U*

                   * SOURCE EMISSION RATE SCALARS WHICH VARY DIURNALLY AND BY DAY
OF WEEK (HRDOW) *

 SOURCE ID = L0002395     ; SOURCE TYPE = VOLUME   :
  HOUR   SCALAR   HOUR   SCALAR   HOUR   SCALAR   HOUR   SCALAR   HOUR   SCALAR
HOUR   SCALAR   HOUR   SCALAR   HOUR   SCALAR
 - - - - - - - - - - - - - - - - - - - - - - - - - - - - - - - - - - - - - - - -
- - - - - - - - - - - - - - - - - - - - - - - - - -
                                                DAY OF WEEK = WEEKDAY
    1  .0000E+00    2  .0000E+00    3  .0000E+00    4  .0000E+00    5  .0000E+00
6  .0000E+00    7  .1000E+01    8  .1000E+01
    9  .1000E+01   10  .1000E+01   11  .1000E+01   12  .1000E+01   13  .1000E+01
14  .1000E+01   15  .1000E+01   16  .1000E+01
   17  .0000E+00   18  .0000E+00   19  .0000E+00   20  .0000E+00   21  .0000E+00
22  .0000E+00   23  .0000E+00   24  .0000E+00
                                                DAY OF WEEK = SATURDAY
    1  .0000E+00    2  .0000E+00    3  .0000E+00    4  .0000E+00    5  .0000E+00
6  .0000E+00    7  .0000E+00    8  .0000E+00
    9  .0000E+00   10  .0000E+00   11  .0000E+00   12  .0000E+00   13  .0000E+00
14  .0000E+00   15  .0000E+00   16  .0000E+00
   17  .0000E+00   18  .0000E+00   19  .0000E+00   20  .0000E+00   21  .0000E+00
22  .0000E+00   23  .0000E+00   24  .0000E+00
                                                DAY OF WEEK = SUNDAY
    1  .0000E+00    2  .0000E+00    3  .0000E+00    4  .0000E+00    5  .0000E+00
6  .0000E+00    7  .0000E+00    8  .0000E+00
    9  .0000E+00   10  .0000E+00   11  .0000E+00   12  .0000E+00   13  .0000E+00
14  .0000E+00   15  .0000E+00   16  .0000E+00
   17  .0000E+00   18  .0000E+00   19  .0000E+00   20  .0000E+00   21  .0000E+00
22  .0000E+00   23  .0000E+00   24  .0000E+00
```

```
 *** AERMOD - VERSION 22112  ***   *** C:\Lakes\Project Files\Garvey\Garvey.isc
***        03/04/24
 *** AERMET - VERSION  16216 ***   ***
***        13:00:54

PAGE 426
 *** MODELOPTs:    RegDFAULT  CONC  ELEV  URBAN  ADJ_U*

                   * SOURCE EMISSION RATE SCALARS WHICH VARY DIURNALLY AND BY DAY
OF WEEK (HRDOW) *

 SOURCE ID = L0002396     ; SOURCE TYPE = VOLUME   :
  HOUR   SCALAR   HOUR   SCALAR   HOUR   SCALAR   HOUR   SCALAR   HOUR   SCALAR
HOUR   SCALAR   HOUR   SCALAR   HOUR   SCALAR
 - - - - - - - - - - - - - - - - - - - - - - - - - - - - - - - - - - - - - - - -
- - - - - - - - - - - - - - - - - - - - - - - - -
                                                DAY OF WEEK = WEEKDAY
    1  .0000E+00    2  .0000E+00    3  .0000E+00    4  .0000E+00    5  .0000E+00
6  .0000E+00    7  .1000E+01    8  .1000E+01
    9  .1000E+01   10  .1000E+01   11  .1000E+01   12  .1000E+01   13  .1000E+01
14  .1000E+01   15  .1000E+01   16  .1000E+01
   17  .0000E+00   18  .0000E+00   19  .0000E+00   20  .0000E+00   21  .0000E+00
22  .0000E+00   23  .0000E+00   24  .0000E+00
                                                DAY OF WEEK = SATURDAY
    1  .0000E+00    2  .0000E+00    3  .0000E+00    4  .0000E+00    5  .0000E+00
6  .0000E+00    7  .0000E+00    8  .0000E+00
    9  .0000E+00   10  .0000E+00   11  .0000E+00   12  .0000E+00   13  .0000E+00
14  .0000E+00   15  .0000E+00   16  .0000E+00
   17  .0000E+00   18  .0000E+00   19  .0000E+00   20  .0000E+00   21  .0000E+00
22  .0000E+00   23  .0000E+00   24  .0000E+00
                                                DAY OF WEEK = SUNDAY
    1  .0000E+00    2  .0000E+00    3  .0000E+00    4  .0000E+00    5  .0000E+00
6  .0000E+00    7  .0000E+00    8  .0000E+00
    9  .0000E+00   10  .0000E+00   11  .0000E+00   12  .0000E+00   13  .0000E+00
14  .0000E+00   15  .0000E+00   16  .0000E+00
   17  .0000E+00   18  .0000E+00   19  .0000E+00   20  .0000E+00   21  .0000E+00
22  .0000E+00   23  .0000E+00   24  .0000E+00
```

*** MODELOPTs: RegDFAULT CONC ELEV URBAN ADJ_U*

* SOURCE EMISSION RATE SCALARS WHICH VARY DIURNALLY AND BY DAY OF WEEK (HRDOW) *

SOURCE ID = L0002397 ; SOURCE TYPE = VOLUME :

HOUR	SCALAR	HOUR	SCALAR	HOUR	SCALAR	HOUR	SCALAR	HOUR	SCALAR	HOUR	SCALAR	HOUR	SCALAR	HOUR	SCALAR

DAY OF WEEK = WEEKDAY

1	.0000E+00	2	.0000E+00	3	.0000E+00	4	.0000E+00	5	.0000E+00	6	.0000E+00	7	.1000E+01	8	.1000E+01
9	.1000E+01	10	.1000E+01	11	.1000E+01	12	.1000E+01	13	.1000E+01	14	.1000E+01	15	.1000E+01	16	.1000E+01
17	.0000E+00	18	.0000E+00	19	.0000E+00	20	.0000E+00	21	.0000E+00	22	.0000E+00	23	.0000E+00	24	.0000E+00

DAY OF WEEK = SATURDAY

1	.0000E+00	2	.0000E+00	3	.0000E+00	4	.0000E+00	5	.0000E+00	6	.0000E+00	7	.0000E+00	8	.0000E+00
9	.0000E+00	10	.0000E+00	11	.0000E+00	12	.0000E+00	13	.0000E+00	14	.0000E+00	15	.0000E+00	16	.0000E+00
17	.0000E+00	18	.0000E+00	19	.0000E+00	20	.0000E+00	21	.0000E+00	22	.0000E+00	23	.0000E+00	24	.0000E+00

DAY OF WEEK = SUNDAY

1	.0000E+00	2	.0000E+00	3	.0000E+00	4	.0000E+00	5	.0000E+00	6	.0000E+00	7	.0000E+00	8	.0000E+00
9	.0000E+00	10	.0000E+00	11	.0000E+00	12	.0000E+00	13	.0000E+00	14	.0000E+00	15	.0000E+00	16	.0000E+00
17	.0000E+00	18	.0000E+00	19	.0000E+00	20	.0000E+00	21	.0000E+00	22	.0000E+00	23	.0000E+00	24	.0000E+00

```
 *** AERMOD - VERSION 22112  ***   *** C:\Lakes\Project Files\Garvey\Garvey.isc
***        03/04/24
 *** AERMET - VERSION  16216 ***   ***
***        13:00:54

PAGE 428
 *** MODELOPTs:    RegDFAULT  CONC  ELEV  URBAN  ADJ_U*

                   * SOURCE EMISSION RATE SCALARS WHICH VARY DIURNALLY AND BY DAY
OF WEEK (HRDOW) *

 SOURCE ID = L0002398     ; SOURCE TYPE = VOLUME   :
  HOUR   SCALAR   HOUR   SCALAR   HOUR   SCALAR   HOUR   SCALAR   HOUR   SCALAR
HOUR   SCALAR   HOUR   SCALAR   HOUR   SCALAR
 - - - - - - - - - - - - - - - - - - - - - - - - - - - - - - - - - - - - - - - -
- - - - - - - - - - - - - - - - - - - - - - - - -
                                                DAY OF WEEK = WEEKDAY
    1  .0000E+00    2  .0000E+00    3  .0000E+00    4  .0000E+00    5  .0000E+00
6  .0000E+00    7  .1000E+01    8  .1000E+01
    9  .1000E+01   10  .1000E+01   11  .1000E+01   12  .1000E+01   13  .1000E+01
14  .1000E+01   15  .1000E+01   16  .1000E+01
   17  .0000E+00   18  .0000E+00   19  .0000E+00   20  .0000E+00   21  .0000E+00
22  .0000E+00   23  .0000E+00   24  .0000E+00
                                                DAY OF WEEK = SATURDAY
    1  .0000E+00    2  .0000E+00    3  .0000E+00    4  .0000E+00    5  .0000E+00
6  .0000E+00    7  .0000E+00    8  .0000E+00
    9  .0000E+00   10  .0000E+00   11  .0000E+00   12  .0000E+00   13  .0000E+00
14  .0000E+00   15  .0000E+00   16  .0000E+00
   17  .0000E+00   18  .0000E+00   19  .0000E+00   20  .0000E+00   21  .0000E+00
22  .0000E+00   23  .0000E+00   24  .0000E+00
                                                DAY OF WEEK = SUNDAY
    1  .0000E+00    2  .0000E+00    3  .0000E+00    4  .0000E+00    5  .0000E+00
6  .0000E+00    7  .0000E+00    8  .0000E+00
    9  .0000E+00   10  .0000E+00   11  .0000E+00   12  .0000E+00   13  .0000E+00
14  .0000E+00   15  .0000E+00   16  .0000E+00
   17  .0000E+00   18  .0000E+00   19  .0000E+00   20  .0000E+00   21  .0000E+00
22  .0000E+00   23  .0000E+00   24  .0000E+00
```

*** MODELOPTs: RegDFAULT CONC ELEV URBAN ADJ_U*

* SOURCE EMISSION RATE SCALARS WHICH VARY DIURNALLY AND BY DAY OF WEEK (HRDOW) *

SOURCE ID = L0002399 ; SOURCE TYPE = VOLUME :

HOUR	SCALAR	HOUR	SCALAR	HOUR	SCALAR	HOUR	SCALAR	HOUR	SCALAR	HOUR	SCALAR	HOUR	SCALAR	HOUR	SCALAR

DAY OF WEEK = WEEKDAY

1	.0000E+00	2	.0000E+00	3	.0000E+00	4	.0000E+00	5	.0000E+00	6	.0000E+00	7	.1000E+01	8	.1000E+01
9	.1000E+01	10	.1000E+01	11	.1000E+01	12	.1000E+01	13	.1000E+01	14	.1000E+01	15	.1000E+01	16	.1000E+01
17	.0000E+00	18	.0000E+00	19	.0000E+00	20	.0000E+00	21	.0000E+00	22	.0000E+00	23	.0000E+00	24	.0000E+00

DAY OF WEEK = SATURDAY

1	.0000E+00	2	.0000E+00	3	.0000E+00	4	.0000E+00	5	.0000E+00	6	.0000E+00	7	.0000E+00	8	.0000E+00
9	.0000E+00	10	.0000E+00	11	.0000E+00	12	.0000E+00	13	.0000E+00	14	.0000E+00	15	.0000E+00	16	.0000E+00
17	.0000E+00	18	.0000E+00	19	.0000E+00	20	.0000E+00	21	.0000E+00	22	.0000E+00	23	.0000E+00	24	.0000E+00

DAY OF WEEK = SUNDAY

1	.0000E+00	2	.0000E+00	3	.0000E+00	4	.0000E+00	5	.0000E+00	6	.0000E+00	7	.0000E+00	8	.0000E+00
9	.0000E+00	10	.0000E+00	11	.0000E+00	12	.0000E+00	13	.0000E+00	14	.0000E+00	15	.0000E+00	16	.0000E+00
17	.0000E+00	18	.0000E+00	19	.0000E+00	20	.0000E+00	21	.0000E+00	22	.0000E+00	23	.0000E+00	24	.0000E+00

*** MODELOPTs: RegDFAULT CONC ELEV URBAN ADJ_U*

* SOURCE EMISSION RATE SCALARS WHICH VARY DIURNALLY AND BY DAY OF WEEK (HRDOW) *

SOURCE ID = L0002400 ; SOURCE TYPE = VOLUME :

HOUR	SCALAR	HOUR	SCALAR	HOUR	SCALAR	HOUR	SCALAR	HOUR	SCALAR	HOUR	SCALAR	HOUR	SCALAR	HOUR	SCALAR

DAY OF WEEK = WEEKDAY

1	.0000E+00	2	.0000E+00	3	.0000E+00	4	.0000E+00	5	.0000E+00	6	.0000E+00	7	.1000E+01	8	.1000E+01
9	.1000E+01	10	.1000E+01	11	.1000E+01	12	.1000E+01	13	.1000E+01	14	.1000E+01	15	.1000E+01	16	.1000E+01
17	.0000E+00	18	.0000E+00	19	.0000E+00	20	.0000E+00	21	.0000E+00	22	.0000E+00	23	.0000E+00	24	.0000E+00

DAY OF WEEK = SATURDAY

1	.0000E+00	2	.0000E+00	3	.0000E+00	4	.0000E+00	5	.0000E+00	6	.0000E+00	7	.0000E+00	8	.0000E+00
9	.0000E+00	10	.0000E+00	11	.0000E+00	12	.0000E+00	13	.0000E+00	14	.0000E+00	15	.0000E+00	16	.0000E+00
17	.0000E+00	18	.0000E+00	19	.0000E+00	20	.0000E+00	21	.0000E+00	22	.0000E+00	23	.0000E+00	24	.0000E+00

DAY OF WEEK = SUNDAY

1	.0000E+00	2	.0000E+00	3	.0000E+00	4	.0000E+00	5	.0000E+00	6	.0000E+00	7	.0000E+00	8	.0000E+00
9	.0000E+00	10	.0000E+00	11	.0000E+00	12	.0000E+00	13	.0000E+00	14	.0000E+00	15	.0000E+00	16	.0000E+00
17	.0000E+00	18	.0000E+00	19	.0000E+00	20	.0000E+00	21	.0000E+00	22	.0000E+00	23	.0000E+00	24	.0000E+00

```
 *** AERMOD - VERSION 22112  ***   *** C:\Lakes\Project Files\Garvey\Garvey.isc
***        03/04/24
 *** AERMET - VERSION  16216 ***   ***
***        13:00:54

PAGE 431
 *** MODELOPTs:    RegDFAULT  CONC  ELEV  URBAN  ADJ_U*

                   * SOURCE EMISSION RATE SCALARS WHICH VARY DIURNALLY AND BY DAY
OF WEEK (HRDOW) *

 SOURCE ID = L0002401     ; SOURCE TYPE = VOLUME   :
  HOUR   SCALAR   HOUR   SCALAR   HOUR   SCALAR   HOUR   SCALAR   HOUR   SCALAR
HOUR   SCALAR   HOUR   SCALAR   HOUR   SCALAR
 - - - - - - - - - - - - - - - - - - - - - - - - - - - - - - - - - - - - - - - -
- - - - - - - - - - - - - - - - - - - - - - - - -
                                                DAY OF WEEK = WEEKDAY
    1  .0000E+00    2  .0000E+00    3  .0000E+00    4  .0000E+00    5  .0000E+00
6  .0000E+00    7  .1000E+01    8  .1000E+01
    9  .1000E+01   10  .1000E+01   11  .1000E+01   12  .1000E+01   13  .1000E+01
14  .1000E+01   15  .1000E+01   16  .1000E+01
   17  .0000E+00   18  .0000E+00   19  .0000E+00   20  .0000E+00   21  .0000E+00
22  .0000E+00   23  .0000E+00   24  .0000E+00
                                                DAY OF WEEK = SATURDAY
    1  .0000E+00    2  .0000E+00    3  .0000E+00    4  .0000E+00    5  .0000E+00
6  .0000E+00    7  .0000E+00    8  .0000E+00
    9  .0000E+00   10  .0000E+00   11  .0000E+00   12  .0000E+00   13  .0000E+00
14  .0000E+00   15  .0000E+00   16  .0000E+00
   17  .0000E+00   18  .0000E+00   19  .0000E+00   20  .0000E+00   21  .0000E+00
22  .0000E+00   23  .0000E+00   24  .0000E+00
                                                DAY OF WEEK = SUNDAY
    1  .0000E+00    2  .0000E+00    3  .0000E+00    4  .0000E+00    5  .0000E+00
6  .0000E+00    7  .0000E+00    8  .0000E+00
    9  .0000E+00   10  .0000E+00   11  .0000E+00   12  .0000E+00   13  .0000E+00
14  .0000E+00   15  .0000E+00   16  .0000E+00
   17  .0000E+00   18  .0000E+00   19  .0000E+00   20  .0000E+00   21  .0000E+00
22  .0000E+00   23  .0000E+00   24  .0000E+00
```

*** MODELOPTs: RegDFAULT CONC ELEV URBAN ADJ_U*

* SOURCE EMISSION RATE SCALARS WHICH VARY DIURNALLY AND BY DAY OF WEEK (HRDOW) *

SOURCE ID = L0002402 ; SOURCE TYPE = VOLUME :

HOUR	SCALAR	HOUR	SCALAR	HOUR	SCALAR	HOUR	SCALAR	HOUR	SCALAR	HOUR	SCALAR	HOUR	SCALAR	HOUR	SCALAR

DAY OF WEEK = WEEKDAY

1	.0000E+00	2	.0000E+00	3	.0000E+00	4	.0000E+00	5	.0000E+00	6	.0000E+00	7	.1000E+01	8	.1000E+01
9	.1000E+01	10	.1000E+01	11	.1000E+01	12	.1000E+01	13	.1000E+01	14	.1000E+01	15	.1000E+01	16	.1000E+01
17	.0000E+00	18	.0000E+00	19	.0000E+00	20	.0000E+00	21	.0000E+00	22	.0000E+00	23	.0000E+00	24	.0000E+00

DAY OF WEEK = SATURDAY

1	.0000E+00	2	.0000E+00	3	.0000E+00	4	.0000E+00	5	.0000E+00	6	.0000E+00	7	.0000E+00	8	.0000E+00
9	.0000E+00	10	.0000E+00	11	.0000E+00	12	.0000E+00	13	.0000E+00	14	.0000E+00	15	.0000E+00	16	.0000E+00
17	.0000E+00	18	.0000E+00	19	.0000E+00	20	.0000E+00	21	.0000E+00	22	.0000E+00	23	.0000E+00	24	.0000E+00

DAY OF WEEK = SUNDAY

1	.0000E+00	2	.0000E+00	3	.0000E+00	4	.0000E+00	5	.0000E+00	6	.0000E+00	7	.0000E+00	8	.0000E+00
9	.0000E+00	10	.0000E+00	11	.0000E+00	12	.0000E+00	13	.0000E+00	14	.0000E+00	15	.0000E+00	16	.0000E+00
17	.0000E+00	18	.0000E+00	19	.0000E+00	20	.0000E+00	21	.0000E+00	22	.0000E+00	23	.0000E+00	24	.0000E+00

```
 *** AERMOD - VERSION 22112  ***   *** C:\Lakes\Project Files\Garvey\Garvey.isc
***        03/04/24
 *** AERMET - VERSION  16216 ***   ***
***        13:00:54

PAGE 433
 *** MODELOPTs:    RegDFAULT  CONC  ELEV  URBAN  ADJ_U*

                   * SOURCE EMISSION RATE SCALARS WHICH VARY DIURNALLY AND BY DAY
OF WEEK (HRDOW) *

 SOURCE ID = L0002403     ; SOURCE TYPE = VOLUME   :
  HOUR   SCALAR   HOUR   SCALAR   HOUR   SCALAR   HOUR   SCALAR   HOUR   SCALAR
HOUR   SCALAR   HOUR   SCALAR   HOUR   SCALAR
 - - - - - - - - - - - - - - - - - - - - - - - - - - - - - - - - - - - - - - - -
- - - - - - - - - - - - - - - - - - - - - - - - -
                                                DAY OF WEEK = WEEKDAY
    1  .0000E+00    2  .0000E+00    3  .0000E+00    4  .0000E+00    5  .0000E+00
6  .0000E+00    7  .1000E+01    8  .1000E+01
    9  .1000E+01   10  .1000E+01   11  .1000E+01   12  .1000E+01   13  .1000E+01
14  .1000E+01   15  .1000E+01   16  .1000E+01
   17  .0000E+00   18  .0000E+00   19  .0000E+00   20  .0000E+00   21  .0000E+00
22  .0000E+00   23  .0000E+00   24  .0000E+00
                                                DAY OF WEEK = SATURDAY
    1  .0000E+00    2  .0000E+00    3  .0000E+00    4  .0000E+00    5  .0000E+00
6  .0000E+00    7  .0000E+00    8  .0000E+00
    9  .0000E+00   10  .0000E+00   11  .0000E+00   12  .0000E+00   13  .0000E+00
14  .0000E+00   15  .0000E+00   16  .0000E+00
   17  .0000E+00   18  .0000E+00   19  .0000E+00   20  .0000E+00   21  .0000E+00
22  .0000E+00   23  .0000E+00   24  .0000E+00
                                                DAY OF WEEK = SUNDAY
    1  .0000E+00    2  .0000E+00    3  .0000E+00    4  .0000E+00    5  .0000E+00
6  .0000E+00    7  .0000E+00    8  .0000E+00
    9  .0000E+00   10  .0000E+00   11  .0000E+00   12  .0000E+00   13  .0000E+00
14  .0000E+00   15  .0000E+00   16  .0000E+00
   17  .0000E+00   18  .0000E+00   19  .0000E+00   20  .0000E+00   21  .0000E+00
22  .0000E+00   23  .0000E+00   24  .0000E+00
```

*** MODELOPTs: RegDFAULT CONC ELEV URBAN ADJ_U*

* SOURCE EMISSION RATE SCALARS WHICH VARY DIURNALLY AND BY DAY OF WEEK (HRDOW) *

SOURCE ID = L0002404 ; SOURCE TYPE = VOLUME :

HOUR	SCALAR	HOUR	SCALAR	HOUR	SCALAR	HOUR	SCALAR	HOUR	SCALAR	HOUR	SCALAR	HOUR	SCALAR	HOUR	SCALAR

DAY OF WEEK = WEEKDAY

1	.0000E+00	2	.0000E+00	3	.0000E+00	4	.0000E+00	5	.0000E+00	6	.0000E+00	7	.1000E+01	8	.1000E+01
9	.1000E+01	10	.1000E+01	11	.1000E+01	12	.1000E+01	13	.1000E+01	14	.1000E+01	15	.1000E+01	16	.1000E+01
17	.0000E+00	18	.0000E+00	19	.0000E+00	20	.0000E+00	21	.0000E+00	22	.0000E+00	23	.0000E+00	24	.0000E+00

DAY OF WEEK = SATURDAY

1	.0000E+00	2	.0000E+00	3	.0000E+00	4	.0000E+00	5	.0000E+00	6	.0000E+00	7	.0000E+00	8	.0000E+00
9	.0000E+00	10	.0000E+00	11	.0000E+00	12	.0000E+00	13	.0000E+00	14	.0000E+00	15	.0000E+00	16	.0000E+00
17	.0000E+00	18	.0000E+00	19	.0000E+00	20	.0000E+00	21	.0000E+00	22	.0000E+00	23	.0000E+00	24	.0000E+00

DAY OF WEEK = SUNDAY

1	.0000E+00	2	.0000E+00	3	.0000E+00	4	.0000E+00	5	.0000E+00	6	.0000E+00	7	.0000E+00	8	.0000E+00
9	.0000E+00	10	.0000E+00	11	.0000E+00	12	.0000E+00	13	.0000E+00	14	.0000E+00	15	.0000E+00	16	.0000E+00
17	.0000E+00	18	.0000E+00	19	.0000E+00	20	.0000E+00	21	.0000E+00	22	.0000E+00	23	.0000E+00	24	.0000E+00

```
 *** AERMOD - VERSION 22112  ***   *** C:\Lakes\Project Files\Garvey\Garvey.isc
***        03/04/24
 *** AERMET - VERSION  16216 ***   ***
***        13:00:54

PAGE 435
 *** MODELOPTs:    RegDFAULT  CONC  ELEV  URBAN  ADJ_U*

                   * SOURCE EMISSION RATE SCALARS WHICH VARY DIURNALLY AND BY DAY
OF WEEK (HRDOW) *

 SOURCE ID = L0002405     ; SOURCE TYPE = VOLUME   :
  HOUR   SCALAR   HOUR   SCALAR   HOUR   SCALAR   HOUR   SCALAR   HOUR   SCALAR
HOUR   SCALAR   HOUR   SCALAR   HOUR   SCALAR
 - - - - - - - - - - - - - - - - - - - - - - - - - - - - - - - - - - - - - - - -
- - - - - - - - - - - - - - - - - - - - - - - - -
                                                DAY OF WEEK = WEEKDAY
    1  .0000E+00    2  .0000E+00    3  .0000E+00    4  .0000E+00    5  .0000E+00
6  .0000E+00    7  .1000E+01    8  .1000E+01
    9  .1000E+01   10  .1000E+01   11  .1000E+01   12  .1000E+01   13  .1000E+01
14  .1000E+01   15  .1000E+01   16  .1000E+01
   17  .0000E+00   18  .0000E+00   19  .0000E+00   20  .0000E+00   21  .0000E+00
22  .0000E+00   23  .0000E+00   24  .0000E+00
                                                DAY OF WEEK = SATURDAY
    1  .0000E+00    2  .0000E+00    3  .0000E+00    4  .0000E+00    5  .0000E+00
6  .0000E+00    7  .0000E+00    8  .0000E+00
    9  .0000E+00   10  .0000E+00   11  .0000E+00   12  .0000E+00   13  .0000E+00
14  .0000E+00   15  .0000E+00   16  .0000E+00
   17  .0000E+00   18  .0000E+00   19  .0000E+00   20  .0000E+00   21  .0000E+00
22  .0000E+00   23  .0000E+00   24  .0000E+00
                                                DAY OF WEEK = SUNDAY
    1  .0000E+00    2  .0000E+00    3  .0000E+00    4  .0000E+00    5  .0000E+00
6  .0000E+00    7  .0000E+00    8  .0000E+00
    9  .0000E+00   10  .0000E+00   11  .0000E+00   12  .0000E+00   13  .0000E+00
14  .0000E+00   15  .0000E+00   16  .0000E+00
   17  .0000E+00   18  .0000E+00   19  .0000E+00   20  .0000E+00   21  .0000E+00
22  .0000E+00   23  .0000E+00   24  .0000E+00
```

*** MODELOPTs: RegDFAULT CONC ELEV URBAN ADJ_U*

* SOURCE EMISSION RATE SCALARS WHICH VARY DIURNALLY AND BY DAY OF WEEK (HRDOW) *

SOURCE ID = L0002406 ; SOURCE TYPE = VOLUME :

HOUR	SCALAR	HOUR	SCALAR	HOUR	SCALAR	HOUR	SCALAR	HOUR	SCALAR	HOUR	SCALAR	HOUR	SCALAR	HOUR	SCALAR

DAY OF WEEK = WEEKDAY

1	.0000E+00	2	.0000E+00	3	.0000E+00	4	.0000E+00	5	.0000E+00	6	.0000E+00	7	.1000E+01	8	.1000E+01
9	.1000E+01	10	.1000E+01	11	.1000E+01	12	.1000E+01	13	.1000E+01	14	.1000E+01	15	.1000E+01	16	.1000E+01
17	.0000E+00	18	.0000E+00	19	.0000E+00	20	.0000E+00	21	.0000E+00	22	.0000E+00	23	.0000E+00	24	.0000E+00

DAY OF WEEK = SATURDAY

1	.0000E+00	2	.0000E+00	3	.0000E+00	4	.0000E+00	5	.0000E+00	6	.0000E+00	7	.0000E+00	8	.0000E+00
9	.0000E+00	10	.0000E+00	11	.0000E+00	12	.0000E+00	13	.0000E+00	14	.0000E+00	15	.0000E+00	16	.0000E+00
17	.0000E+00	18	.0000E+00	19	.0000E+00	20	.0000E+00	21	.0000E+00	22	.0000E+00	23	.0000E+00	24	.0000E+00

DAY OF WEEK = SUNDAY

1	.0000E+00	2	.0000E+00	3	.0000E+00	4	.0000E+00	5	.0000E+00	6	.0000E+00	7	.0000E+00	8	.0000E+00
9	.0000E+00	10	.0000E+00	11	.0000E+00	12	.0000E+00	13	.0000E+00	14	.0000E+00	15	.0000E+00	16	.0000E+00
17	.0000E+00	18	.0000E+00	19	.0000E+00	20	.0000E+00	21	.0000E+00	22	.0000E+00	23	.0000E+00	24	.0000E+00

*** MODELOPTs: RegDFAULT CONC ELEV URBAN ADJ_U*

* SOURCE EMISSION RATE SCALARS WHICH VARY DIURNALLY AND BY DAY OF WEEK (HRDOW) *

SOURCE ID = L0002407 ; SOURCE TYPE = VOLUME :

HOUR	SCALAR	HOUR	SCALAR	HOUR	SCALAR	HOUR	SCALAR	HOUR	SCALAR	HOUR	SCALAR	HOUR	SCALAR	HOUR	SCALAR

DAY OF WEEK = WEEKDAY

1	.0000E+00	2	.0000E+00	3	.0000E+00	4	.0000E+00	5	.0000E+00	6	.0000E+00	7	.1000E+01	8	.1000E+01
9	.1000E+01	10	.1000E+01	11	.1000E+01	12	.1000E+01	13	.1000E+01	14	.1000E+01	15	.1000E+01	16	.1000E+01
17	.0000E+00	18	.0000E+00	19	.0000E+00	20	.0000E+00	21	.0000E+00	22	.0000E+00	23	.0000E+00	24	.0000E+00

DAY OF WEEK = SATURDAY

1	.0000E+00	2	.0000E+00	3	.0000E+00	4	.0000E+00	5	.0000E+00	6	.0000E+00	7	.0000E+00	8	.0000E+00
9	.0000E+00	10	.0000E+00	11	.0000E+00	12	.0000E+00	13	.0000E+00	14	.0000E+00	15	.0000E+00	16	.0000E+00
17	.0000E+00	18	.0000E+00	19	.0000E+00	20	.0000E+00	21	.0000E+00	22	.0000E+00	23	.0000E+00	24	.0000E+00

DAY OF WEEK = SUNDAY

1	.0000E+00	2	.0000E+00	3	.0000E+00	4	.0000E+00	5	.0000E+00	6	.0000E+00	7	.0000E+00	8	.0000E+00
9	.0000E+00	10	.0000E+00	11	.0000E+00	12	.0000E+00	13	.0000E+00	14	.0000E+00	15	.0000E+00	16	.0000E+00
17	.0000E+00	18	.0000E+00	19	.0000E+00	20	.0000E+00	21	.0000E+00	22	.0000E+00	23	.0000E+00	24	.0000E+00

*** MODELOPTs: RegDFAULT CONC ELEV URBAN ADJ_U*

*** DISCRETE CARTESIAN RECEPTORS ***
(X-COORD, Y-COORD, ZELEV, ZHILL, ZFLAG)
(METERS)

(396166.3, 3767377.3, 115.7, 132.7, 0.0); (396266.3, 3767377.3, 105.9, 138.7, 0.0);
(396366.3, 3767377.3, 120.5, 133.9, 0.0); (396466.3, 3767377.3, 122.6, 136.2, 0.0);
(396566.3, 3767377.3, 135.7, 135.7, 0.0); (396666.3, 3767377.3, 123.4, 136.2, 0.0);
(396766.3, 3767377.3, 108.5, 189.9, 0.0); (396866.3, 3767377.3, 107.0, 190.1, 0.0);
(396966.3, 3767377.3, 125.6, 144.6, 0.0); (397066.3, 3767377.3, 139.2, 144.6, 0.0);
(397166.3, 3767377.3, 137.4, 141.7, 0.0); (397266.3, 3767377.3, 127.4, 190.1, 0.0);
(397366.3, 3767377.3, 136.9, 151.1, 0.0); (397466.3, 3767377.3, 148.7, 148.7, 0.0);
(397566.3, 3767377.3, 146.1, 147.9, 0.0); (397666.3, 3767377.3, 144.8, 144.8, 0.0);
(397766.3, 3767377.3, 126.9, 151.0, 0.0); (397866.3, 3767377.3, 122.6, 151.4, 0.0);
(396166.3, 3767477.3, 129.9, 129.9, 0.0); (396266.3, 3767477.3, 107.3, 140.4, 0.0);
(396366.3, 3767477.3, 125.7, 125.7, 0.0); (396466.3, 3767477.3, 132.5, 134.1, 0.0);
(396566.3, 3767477.3, 132.1, 134.5, 0.0); (396666.3, 3767477.3, 121.4, 179.2, 0.0);
(396766.3, 3767477.3, 112.3, 190.1, 0.0); (396866.3, 3767477.3, 110.0, 190.1, 0.0);
(396966.3, 3767477.3, 125.3, 190.1, 0.0); (397066.3, 3767477.3, 138.9, 142.1, 0.0);
(397166.3, 3767477.3, 140.8, 140.8, 0.0); (397266.3, 3767477.3, 133.3, 190.1, 0.0);
(397366.3, 3767477.3, 134.6, 190.1, 0.0); (397466.3, 3767477.3, 147.0, 147.8, 0.0);
(397566.3, 3767477.3, 148.9, 149.3, 0.0); (397666.3, 3767477.3, 145.3, 145.3, 0.0);
(397766.3, 3767477.3, 140.9, 147.9, 0.0); (397866.3, 3767477.3, 137.2, 146.8, 0.0);
(396166.3, 3767577.3, 125.9, 127.1, 0.0); (396266.3, 3767577.3, 113.8, 140.4, 0.0);
(396366.3, 3767577.3, 118.8, 140.2, 0.0); (396466.3, 3767577.3, 127.8, 138.5, 0.0);
(396566.3, 3767577.3, 135.6, 136.5, 0.0); (396666.3, 3767577.3, 136.3, 136.3, 0.0);
(396766.3, 3767577.3, 109.7, 190.1, 0.0); (396866.3, 3767577.3, 116.9, 190.1, 0.0);
(396966.3, 3767577.3, 123.0, 190.1, 0.0); (397066.3, 3767577.3, 131.5, 190.1, 0.0);

(397166.3, 3767577.3, 140.0, 190.1, 0.0); (397266.3, 3767577.3, 137.3, 190.1, 0.0);
(397366.3, 3767577.3, 135.4, 190.1, 0.0); (397466.3, 3767577.3, 148.8, 148.8, 0.0);
(397566.3, 3767577.3, 150.0, 150.0, 0.0); (397666.3, 3767577.3, 150.0, 150.0, 0.0);
(397766.3, 3767577.3, 146.4, 149.6, 0.0); (397866.3, 3767577.3, 143.4, 146.8, 0.0);
(396166.3, 3767677.3, 134.3, 137.0, 0.0); (396266.3, 3767677.3, 121.4, 140.9, 0.0);
(396366.3, 3767677.3, 127.1, 139.7, 0.0); (396466.3, 3767677.3, 137.8, 137.8, 0.0);
(396566.3, 3767677.3, 136.1, 136.5, 0.0); (396666.3, 3767677.3, 115.5, 190.1, 0.0);
(396766.3, 3767677.3, 118.7, 190.1, 0.0); (396866.3, 3767677.3, 131.4, 190.1, 0.0);
(396966.3, 3767677.3, 141.0, 190.1, 0.0); (397066.3, 3767677.3, 136.8, 190.1, 0.0);
(397166.3, 3767677.3, 138.8, 190.1, 0.0); (397266.3, 3767677.3, 149.5, 190.1, 0.0);
(397366.3, 3767677.3, 140.2, 190.1, 0.0); (397466.3, 3767677.3, 155.3, 190.1, 0.0);
(397566.3, 3767677.3, 153.2, 155.7, 0.0); (397666.3, 3767677.3, 151.7, 151.7, 0.0);
(397766.3, 3767677.3, 150.0, 150.0, 0.0); (397866.3, 3767677.3, 144.2, 162.5, 0.0);
(396166.3, 3767777.3, 136.1, 136.1, 0.0); (396266.3, 3767777.3, 140.2, 140.2, 0.0);
(396366.3, 3767777.3, 134.6, 139.8, 0.0); (396466.3, 3767777.3, 135.0, 139.4, 0.0);
(396566.3, 3767777.3, 123.0, 179.3, 0.0); (396666.3, 3767777.3, 119.5, 190.1, 0.0);
(396766.3, 3767777.3, 131.5, 189.9, 0.0); (396866.3, 3767777.3, 143.8, 187.5, 0.0);
(396966.3, 3767777.3, 150.3, 189.8, 0.0); (397066.3, 3767777.3, 146.0, 190.1, 0.0);
(397166.3, 3767777.3, 142.4, 190.1, 0.0); (397266.3, 3767777.3, 151.1, 190.1, 0.0);
(397366.3, 3767777.3, 147.0, 190.1, 0.0); (397466.3, 3767777.3, 157.7, 190.1, 0.0);
(397566.3, 3767777.3, 157.8, 157.8, 0.0); (397666.3, 3767777.3, 153.0, 166.6, 0.0);
(397766.3, 3767777.3, 154.3, 166.4, 0.0); (397866.3, 3767777.3, 152.4, 163.3, 0.0);

*** MODELOPTs: RegDFAULT CONC ELEV URBAN ADJ_U*

*** DISCRETE CARTESIAN RECEPTORS ***
(X-COORD, Y-COORD, ZELEV, ZHILL, ZFLAG)
(METERS)

(396166.3, 3767877.3, 136.4, 140.2, 0.0); (396266.3, 3767877.3, 141.0, 141.0, 0.0);
(396366.3, 3767877.3, 140.4, 140.4, 0.0); (396466.3, 3767877.3, 132.0, 177.9, 0.0);
(396566.3, 3767877.3, 123.1, 187.3, 0.0); (397466.3, 3767877.3, 150.6, 190.1, 0.0);
(397566.3, 3767877.3, 160.5, 190.1, 0.0); (397666.3, 3767877.3, 163.5, 166.5, 0.0);
(397766.3, 3767877.3, 163.0, 163.0, 0.0); (397866.3, 3767877.3, 151.0, 166.4, 0.0);
(396166.3, 3767977.3, 130.1, 162.9, 0.0); (396266.3, 3767977.3, 137.3, 154.3, 0.0);
(396366.3, 3767977.3, 137.3, 177.9, 0.0); (396466.3, 3767977.3, 127.6, 179.2, 0.0);
(397466.3, 3767977.3, 163.8, 190.1, 0.0); (397566.3, 3767977.3, 166.1, 166.1, 0.0);
(397666.3, 3767977.3, 166.5, 166.5, 0.0); (397766.3, 3767977.3, 151.5, 166.9, 0.0);
(397866.3, 3767977.3, 136.5, 166.9, 0.0); (396166.3, 3768077.3, 145.1, 154.1, 0.0);
(396266.3, 3768077.3, 135.0, 177.9, 0.0); (396366.3, 3768077.3, 134.7, 177.9, 0.0);
(396466.3, 3768077.3, 134.4, 178.6, 0.0); (397466.3, 3768077.3, 160.5, 190.1, 0.0);
(397566.3, 3768077.3, 152.9, 190.1, 0.0); (397666.3, 3768077.3, 150.5, 190.1, 0.0);
(397766.3, 3768077.3, 151.4, 166.9, 0.0); (397866.3, 3768077.3, 140.2, 166.9, 0.0);
(396166.3, 3768177.3, 152.1, 159.2, 0.0); (396266.3, 3768177.3, 145.4, 165.1, 0.0);
(396366.3, 3768177.3, 144.6, 177.9, 0.0); (396466.3, 3768177.3, 137.7, 178.6, 0.0);
(397466.3, 3768177.3, 150.0, 190.1, 0.0); (397566.3, 3768177.3, 142.8, 190.1, 0.0);
(397666.3, 3768177.3, 136.9, 190.1, 0.0); (397766.3, 3768177.3, 141.0, 189.9, 0.0);
(397866.3, 3768177.3, 128.1, 190.1, 0.0); (396166.3, 3768277.3, 160.7, 160.7, 0.0);
(396266.3, 3768277.3, 143.7, 170.2, 0.0); (396366.3, 3768277.3, 144.5, 178.0, 0.0);
(396466.3, 3768277.3, 140.5, 178.6, 0.0); (397366.3, 3768277.3, 154.5, 190.1, 0.0);
(397466.3, 3768277.3, 144.3, 190.1, 0.0); (397566.3, 3768277.3, 141.8, 190.1, 0.0);
(397666.3, 3768277.3, 130.2, 190.1, 0.0); (397766.3, 3768277.3, 123.9, 190.1, 0.0);

(397866.3, 3768277.3, 128.2, 189.9, 0.0); (396166.3, 3768377.3, 165.7, 165.7, 0.0);
(396266.3, 3768377.3, 148.7, 170.2, 0.0); (396366.3, 3768377.3, 147.4, 178.0, 0.0);
(396466.3, 3768377.3, 145.3, 178.6, 0.0); (397266.3, 3768377.3, 155.1, 177.4, 0.0);
(397366.3, 3768377.3, 151.8, 189.9, 0.0); (397466.3, 3768377.3, 147.8, 190.1, 0.0);
(397566.3, 3768377.3, 148.5, 164.2, 0.0); (397666.3, 3768377.3, 143.4, 164.8, 0.0);
(397766.3, 3768377.3, 133.9, 165.4, 0.0); (397866.3, 3768377.3, 142.1, 142.1, 0.0);
(396166.3, 3768477.3, 166.4, 166.4, 0.0); (396266.3, 3768477.3, 159.5, 170.2, 0.0);
(396366.3, 3768477.3, 161.2, 170.2, 0.0); (396466.3, 3768477.3, 148.3, 178.6, 0.0);
(397166.3, 3768477.3, 135.8, 190.1, 0.0); (397266.3, 3768477.3, 153.2, 177.3, 0.0);
(397366.3, 3768477.3, 159.5, 159.5, 0.0); (397466.3, 3768477.3, 162.8, 164.2, 0.0);
(397566.3, 3768477.3, 143.2, 165.7, 0.0); (397666.3, 3768477.3, 135.8, 165.7, 0.0);
(397766.3, 3768477.3, 149.8, 149.8, 0.0); (397866.3, 3768477.3, 135.7, 151.7, 0.0);
(396166.3, 3768577.3, 144.5, 170.2, 0.0); (396266.3, 3768577.3, 167.9, 168.9, 0.0);
(396366.3, 3768577.3, 167.6, 167.6, 0.0); (396466.3, 3768577.3, 152.7, 177.8, 0.0);
(396566.3, 3768577.3, 160.4, 177.8, 0.0); (396866.3, 3768577.3, 145.2, 178.6, 0.0);
(396966.3, 3768577.3, 138.8, 178.6, 0.0); (397066.3, 3768577.3, 132.1, 178.6, 0.0);
(397166.3, 3768577.3, 136.2, 177.4, 0.0); (397266.3, 3768577.3, 140.1, 177.3, 0.0);
(397366.3, 3768577.3, 154.1, 165.7, 0.0); (397466.3, 3768577.3, 165.1, 165.1, 0.0);
(397566.3, 3768577.3, 154.9, 165.7, 0.0); (397666.3, 3768577.3, 143.8, 165.7, 0.0);
(397766.3, 3768577.3, 130.2, 165.7, 0.0); (397866.3, 3768577.3, 126.4, 165.6, 0.0);
(396166.3, 3768677.3, 140.3, 170.2, 0.0); (396266.3, 3768677.3, 147.6, 170.2, 0.0);
(396366.3, 3768677.3, 165.8, 165.8, 0.0); (396466.3, 3768677.3, 152.2, 169.8, 0.0);

*** MODELOPTs: RegDFAULT CONC ELEV URBAN ADJ_U*

*** DISCRETE CARTESIAN RECEPTORS ***
(X-COORD, Y-COORD, ZELEV, ZHILL, ZFLAG)
(METERS)

(396566.3, 3768677.3, 155.8, 172.2, 0.0); (396666.3, 3768677.3, 150.8, 178.6, 0.0);
(396766.3, 3768677.3, 142.1, 178.6, 0.0); (396866.3, 3768677.3, 137.0, 178.6, 0.0);
(396966.3, 3768677.3, 131.7, 178.6, 0.0); (397066.3, 3768677.3, 130.1, 178.6, 0.0);
(397166.3, 3768677.3, 128.6, 177.4, 0.0); (397366.3, 3768677.3, 145.6, 165.7, 0.0);
(397466.3, 3768677.3, 150.5, 165.7, 0.0); (397566.3, 3768677.3, 152.2, 165.7, 0.0);
(397666.3, 3768677.3, 146.6, 165.6, 0.0); (397766.3, 3768677.3, 130.7, 165.7, 0.0);
(397866.3, 3768677.3, 125.1, 165.7, 0.0); (396166.3, 3768777.3, 145.4, 170.2, 0.0);
(396266.3, 3768777.3, 144.8, 170.2, 0.0); (396366.3, 3768777.3, 163.1, 163.1, 0.0);
(396466.3, 3768777.3, 155.3, 165.7, 0.0); (396566.3, 3768777.3, 143.4, 177.6, 0.0);
(396666.3, 3768777.3, 139.2, 178.6, 0.0); (396766.3, 3768777.3, 135.6, 178.6, 0.0);
(396866.3, 3768777.3, 131.2, 178.6, 0.0); (396966.3, 3768777.3, 126.5, 178.6, 0.0);
(397066.3, 3768777.3, 124.8, 178.6, 0.0); (397166.3, 3768777.3, 122.4, 177.4, 0.0);
(397266.3, 3768777.3, 130.1, 165.7, 0.0); (397366.3, 3768777.3, 132.4, 165.7, 0.0);
(397466.3, 3768777.3, 129.8, 165.7, 0.0); (397566.3, 3768777.3, 127.3, 165.7, 0.0);
(397666.3, 3768777.3, 125.3, 165.7, 0.0); (397766.3, 3768777.3, 120.9, 165.7, 0.0);
(397866.3, 3768777.3, 118.3, 165.7, 0.0); (396166.3, 3768877.3, 136.8, 168.6, 0.0);
(396266.3, 3768877.3, 146.2, 165.7, 0.0); (396366.3, 3768877.3, 141.1, 166.6, 0.0);
(396466.3, 3768877.3, 155.7, 156.5, 0.0); (396566.3, 3768877.3, 144.8, 157.3, 0.0);
(396666.3, 3768877.3, 134.1, 178.2, 0.0); (396766.3, 3768877.3, 131.8, 178.6, 0.0);
(396866.3, 3768877.3, 140.6, 141.3, 0.0); (396966.3, 3768877.3, 133.4, 172.3, 0.0);
(397066.3, 3768877.3, 123.2, 177.4, 0.0); (397166.3, 3768877.3, 120.1, 177.4, 0.0);
(397266.3, 3768877.3, 124.1, 165.7, 0.0); (397366.3, 3768877.3, 121.1, 165.7, 0.0);
(397466.3, 3768877.3, 119.6, 165.7, 0.0); (397566.3, 3768877.3, 117.6, 165.7, 0.0);

(397666.3, 3768877.3, 110.5, 165.7, 0.0); (397766.3, 3768877.3, 107.2, 165.7, 0.0);
(397866.3, 3768877.3, 108.4, 165.7, 0.0); (396425.0, 3767739.0, 138.5, 138.5, 0.0);
(396475.0, 3767739.0, 138.8, 139.0, 0.0); (396525.0, 3767739.0, 130.9, 177.4, 0.0);
(396575.0, 3767739.0, 131.7, 179.3, 0.0); (396625.0, 3767739.0, 117.5, 189.9, 0.0);
(396675.0, 3767739.0, 116.5, 190.1, 0.0); (396725.0, 3767739.0, 128.7, 187.6, 0.0);
(396775.0, 3767739.0, 124.5, 190.1, 0.0); (396825.0, 3767739.0, 133.0, 190.1, 0.0);
(396875.0, 3767739.0, 142.3, 187.6, 0.0); (396925.0, 3767739.0, 144.9, 189.8, 0.0);
(396975.0, 3767739.0, 146.1, 190.1, 0.0); (397025.0, 3767739.0, 144.8, 190.1, 0.0);
(397075.0, 3767739.0, 141.3, 190.1, 0.0); (397125.0, 3767739.0, 139.2, 190.1, 0.0);
(397175.0, 3767739.0, 140.4, 190.1, 0.0); (397225.0, 3767739.0, 142.5, 190.1, 0.0);
(397275.0, 3767739.0, 150.0, 190.1, 0.0); (397325.0, 3767739.0, 146.7, 190.1, 0.0);
(397375.0, 3767739.0, 143.3, 190.1, 0.0); (397425.0, 3767739.0, 143.4, 190.1, 0.0);
(397475.0, 3767739.0, 156.5, 190.1, 0.0); (397525.0, 3767739.0, 156.4, 190.1, 0.0);
(396425.0, 3767789.0, 138.7, 138.7, 0.0); (396475.0, 3767789.0, 134.0, 177.4, 0.0);
(396525.0, 3767789.0, 126.8, 179.3, 0.0); (396575.0, 3767789.0, 120.3, 187.5, 0.0);
(396625.0, 3767789.0, 118.9, 189.9, 0.0); (396675.0, 3767789.0, 121.5, 190.1, 0.0);
(396725.0, 3767789.0, 132.1, 187.5, 0.0); (396775.0, 3767789.0, 132.9, 189.9, 0.0);
(396825.0, 3767789.0, 139.6, 187.6, 0.0); (396875.0, 3767789.0, 144.4, 187.6, 0.0);
(396925.0, 3767789.0, 146.7, 189.9, 0.0); (396975.0, 3767789.0, 151.2, 189.9, 0.0);
(397025.0, 3767789.0, 150.6, 190.1, 0.0); (397075.0, 3767789.0, 146.6, 190.1, 0.0);
(397125.0, 3767789.0, 143.3, 190.1, 0.0); (397175.0, 3767789.0, 142.7, 190.1, 0.0);
(397225.0, 3767789.0, 143.2, 190.1, 0.0); (397275.0, 3767789.0, 150.9, 190.1, 0.0);

*** MODELOPTs: RegDFAULT CONC ELEV URBAN ADJ_U*

*** DISCRETE CARTESIAN RECEPTORS ***
(X-COORD, Y-COORD, ZELEV, ZHILL, ZFLAG)
(METERS)

(397325.0, 3767789.0, 151.5, 190.1, 0.0); (397375.0, 3767789.0, 146.7, 190.1, 0.0);
(397425.0, 3767789.0, 144.9, 190.1, 0.0); (397475.0, 3767789.0, 158.1, 190.1, 0.0);
(397525.0, 3767789.0, 157.3, 190.1, 0.0); (396425.0, 3767839.0, 139.0, 139.0, 0.0);
(396475.0, 3767839.0, 136.5, 177.4, 0.0); (396525.0, 3767839.0, 123.2, 179.3, 0.0);
(396575.0, 3767839.0, 121.4, 187.5, 0.0); (396625.0, 3767839.0, 121.0, 189.2, 0.0);
(396675.0, 3767839.0, 134.3, 179.3, 0.0); (396725.0, 3767839.0, 137.9, 187.3, 0.0);
(396775.0, 3767839.0, 139.9, 187.5, 0.0); (396825.0, 3767839.0, 143.2, 187.5, 0.0);
(396875.0, 3767839.0, 146.7, 187.5, 0.0); (396925.0, 3767839.0, 149.0, 189.9, 0.0);
(396975.0, 3767839.0, 155.0, 187.6, 0.0); (397025.0, 3767839.0, 157.6, 190.1, 0.0);
(397075.0, 3767839.0, 149.2, 190.1, 0.0); (397125.0, 3767839.0, 144.0, 190.1, 0.0);
(397175.0, 3767839.0, 146.9, 190.1, 0.0); (397225.0, 3767839.0, 152.9, 190.1, 0.0);
(397275.0, 3767839.0, 157.1, 190.1, 0.0); (397325.0, 3767839.0, 158.7, 190.1, 0.0);
(397375.0, 3767839.0, 152.2, 190.1, 0.0); (397475.0, 3767839.0, 148.9, 190.1, 0.0);
(397525.0, 3767839.0, 159.1, 190.1, 0.0); (396425.0, 3767889.0, 138.5, 138.5, 0.0);
(396475.0, 3767889.0, 125.8, 179.3, 0.0); (396525.0, 3767889.0, 123.8, 179.3, 0.0);
(396575.0, 3767889.0, 126.6, 179.3, 0.0); (397475.0, 3767889.0, 157.1, 190.1, 0.0);
(397525.0, 3767889.0, 161.3, 190.1, 0.0); (396425.0, 3767939.0, 138.2, 177.9, 0.0);
(396475.0, 3767939.0, 126.2, 179.3, 0.0); (396525.0, 3767939.0, 126.2, 179.3, 0.0);
(397475.0, 3767939.0, 162.4, 190.1, 0.0); (397525.0, 3767939.0, 163.5, 190.1, 0.0);
(396425.0, 3767989.0, 131.0, 177.9, 0.0); (396475.0, 3767989.0, 127.9, 179.2, 0.0);
(397475.0, 3767989.0, 165.3, 190.1, 0.0); (397525.0, 3767989.0, 165.7, 190.1, 0.0);
(396425.0, 3768039.0, 131.7, 178.0, 0.0); (396475.0, 3768039.0, 131.1, 178.6, 0.0);
(397475.0, 3768039.0, 161.9, 190.1, 0.0); (397525.0, 3768039.0, 158.7, 190.1, 0.0);

(396425.0, 3768089.0, 134.2, 178.0, 0.0); (396475.0, 3768089.0, 135.0, 178.6, 0.0);
(397475.0, 3768089.0, 160.1, 190.1, 0.0); (397525.0, 3768089.0, 153.2, 190.1, 0.0);
(396425.0, 3768139.0, 145.5, 177.9, 0.0); (396475.0, 3768139.0, 136.2, 178.6, 0.0);
(397425.0, 3768139.0, 156.2, 190.1, 0.0); (397475.0, 3768139.0, 152.6, 190.1, 0.0);
(397525.0, 3768139.0, 149.0, 190.1, 0.0); (396425.0, 3768189.0, 145.6, 177.9, 0.0);
(396475.0, 3768189.0, 137.6, 178.6, 0.0); (397375.0, 3768189.0, 154.3, 190.1, 0.0);
(397425.0, 3768189.0, 146.2, 190.1, 0.0); (397475.0, 3768189.0, 149.1, 190.1, 0.0);
(397525.0, 3768189.0, 146.9, 190.1, 0.0); (396425.0, 3768239.0, 145.7, 178.0, 0.0);
(396475.0, 3768239.0, 138.9, 178.6, 0.0); (397375.0, 3768239.0, 155.1, 190.1, 0.0);
(397425.0, 3768239.0, 137.7, 190.1, 0.0); (397475.0, 3768239.0, 134.4, 190.1, 0.0);
(397525.0, 3768239.0, 134.0, 190.1, 0.0); (396425.0, 3768289.0, 144.0, 178.6, 0.0);
(396475.0, 3768289.0, 140.5, 178.6, 0.0); (397325.0, 3768289.0, 154.5, 190.1, 0.0);
(397375.0, 3768289.0, 152.9, 190.1, 0.0); (397425.0, 3768289.0, 152.5, 190.1, 0.0);
(397475.0, 3768289.0, 149.3, 190.1, 0.0); (397525.0, 3768289.0, 144.0, 190.1, 0.0);
(396425.0, 3768339.0, 147.3, 178.6, 0.0); (396475.0, 3768339.0, 142.6, 178.6, 0.0);
(396525.0, 3768339.0, 144.1, 178.6, 0.0); (397275.0, 3768339.0, 154.4, 190.1, 0.0);
(397325.0, 3768339.0, 154.2, 190.1, 0.0); (397375.0, 3768339.0, 151.5, 190.1, 0.0);
(397425.0, 3768339.0, 151.4, 190.1, 0.0); (397475.0, 3768339.0, 150.5, 190.1, 0.0);
(397525.0, 3768339.0, 149.6, 189.9, 0.0); (396425.0, 3768389.0, 147.5, 178.6, 0.0);
(396475.0, 3768389.0, 144.2, 178.6, 0.0); (396525.0, 3768389.0, 145.3, 178.6, 0.0);
(397225.0, 3768389.0, 154.6, 177.3, 0.0); (397275.0, 3768389.0, 154.7, 177.3, 0.0);
(397325.0, 3768389.0, 154.3, 177.3, 0.0); (397375.0, 3768389.0, 151.2, 189.9, 0.0);

*** MODELOPTs: RegDFAULT CONC ELEV URBAN ADJ_U*

*** DISCRETE CARTESIAN RECEPTORS ***
(X-COORD, Y-COORD, ZELEV, ZHILL, ZFLAG)
(METERS)

(397425.0, 3768389.0, 148.7, 189.9, 0.0); (397475.0, 3768389.0, 147.2, 189.9, 0.0);
(397525.0, 3768389.0, 145.2, 189.9, 0.0); (396425.0, 3768439.0, 154.9, 170.2, 0.0);
(396475.0, 3768439.0, 146.6, 178.6, 0.0); (396525.0, 3768439.0, 146.5, 178.6, 0.0);
(397175.0, 3768439.0, 140.6, 190.1, 0.0); (397225.0, 3768439.0, 153.7, 177.3, 0.0);
(397275.0, 3768439.0, 153.6, 177.3, 0.0); (397325.0, 3768439.0, 157.3, 158.6, 0.0);
(397375.0, 3768439.0, 159.1, 159.1, 0.0); (397425.0, 3768439.0, 159.8, 159.8, 0.0);
(397475.0, 3768439.0, 148.1, 165.7, 0.0); (397525.0, 3768439.0, 144.4, 165.7, 0.0);
(396425.0, 3768489.0, 154.3, 170.2, 0.0); (396475.0, 3768489.0, 147.6, 178.6, 0.0);
(396525.0, 3768489.0, 148.7, 178.6, 0.0); (397075.0, 3768489.0, 132.5, 190.1, 0.0);
(397125.0, 3768489.0, 132.4, 190.1, 0.0); (397175.0, 3768489.0, 136.5, 190.1, 0.0);
(397225.0, 3768489.0, 144.3, 177.3, 0.0); (397275.0, 3768489.0, 153.0, 177.3, 0.0);
(397325.0, 3768489.0, 159.8, 159.8, 0.0); (397375.0, 3768489.0, 159.8, 162.2, 0.0);
(397425.0, 3768489.0, 160.8, 160.8, 0.0); (397475.0, 3768489.0, 164.2, 164.2, 0.0);
(397525.0, 3768489.0, 162.1, 163.6, 0.0); (396425.0, 3768539.0, 154.4, 170.2, 0.0);
(396475.0, 3768539.0, 150.5, 178.6, 0.0); (396525.0, 3768539.0, 150.3, 178.6, 0.0);
(396575.0, 3768539.0, 159.1, 178.6, 0.0); (397025.0, 3768539.0, 132.3, 178.6, 0.0);
(397075.0, 3768539.0, 132.0, 178.6, 0.0); (397125.0, 3768539.0, 131.8, 189.9, 0.0);
(397175.0, 3768539.0, 135.6, 177.5, 0.0); (397225.0, 3768539.0, 139.4, 177.3, 0.0);
(397275.0, 3768539.0, 152.8, 160.0, 0.0); (397325.0, 3768539.0, 158.4, 158.4, 0.0);
(397375.0, 3768539.0, 158.1, 163.6, 0.0); (397425.0, 3768539.0, 162.2, 162.2, 0.0);
(397475.0, 3768539.0, 164.4, 164.4, 0.0); (397525.0, 3768539.0, 164.8, 164.8, 0.0);
(396425.0, 3768589.0, 158.7, 169.9, 0.0); (396475.0, 3768589.0, 152.6, 177.8, 0.0);
(396525.0, 3768589.0, 157.5, 177.6, 0.0); (396575.0, 3768589.0, 160.9, 177.6, 0.0);

(396625.0, 3768589.0, 162.0, 178.2, 0.0); (396825.0, 3768589.0, 147.5, 178.6, 0.0);
(396875.0, 3768589.0, 145.2, 178.6, 0.0); (396925.0, 3768589.0, 137.9, 178.6, 0.0);
(396975.0, 3768589.0, 138.4, 178.6, 0.0); (397025.0, 3768589.0, 136.6, 178.6, 0.0);
(397075.0, 3768589.0, 132.2, 178.6, 0.0); (397125.0, 3768589.0, 134.5, 177.7, 0.0);
(397175.0, 3768589.0, 136.3, 177.4, 0.0); (397225.0, 3768589.0, 137.1, 177.4, 0.0);
(397275.0, 3768589.0, 139.2, 177.3, 0.0); (397325.0, 3768589.0, 153.5, 163.8, 0.0);
(397375.0, 3768589.0, 153.6, 165.7, 0.0); (397425.0, 3768589.0, 163.1, 163.1, 0.0);
(397475.0, 3768589.0, 165.4, 165.4, 0.0); (397525.0, 3768589.0, 165.6, 165.6, 0.0);
(396425.0, 3768639.0, 162.6, 166.3, 0.0); (396475.0, 3768639.0, 152.3, 169.8, 0.0);
(396525.0, 3768639.0, 161.2, 161.2, 0.0); (396575.0, 3768639.0, 160.7, 160.7, 0.0);
(396625.0, 3768639.0, 159.0, 172.3, 0.0); (396675.0, 3768639.0, 157.1, 178.6, 0.0);
(396725.0, 3768639.0, 154.6, 178.6, 0.0); (396775.0, 3768639.0, 150.0, 178.6, 0.0);
(396825.0, 3768639.0, 147.2, 178.6, 0.0); (396875.0, 3768639.0, 142.5, 178.6, 0.0);
(396925.0, 3768639.0, 137.9, 178.6, 0.0); (396975.0, 3768639.0, 136.9, 178.6, 0.0);
(397025.0, 3768639.0, 134.5, 178.6, 0.0); (397075.0, 3768639.0, 129.9, 178.6, 0.0);
(397125.0, 3768639.0, 123.7, 189.9, 0.0); (397175.0, 3768639.0, 132.0, 177.4, 0.0);
(397225.0, 3768639.0, 134.7, 177.4, 0.0); (397275.0, 3768639.0, 139.3, 177.3, 0.0);
(397325.0, 3768639.0, 147.2, 165.7, 0.0); (397375.0, 3768639.0, 147.6, 165.7, 0.0);
(397425.0, 3768639.0, 151.7, 165.7, 0.0); (397475.0, 3768639.0, 165.6, 165.6, 0.0);
(397525.0, 3768639.0, 165.5, 165.5, 0.0); (396425.0, 3768689.0, 164.7, 165.9, 0.0);
(396475.0, 3768689.0, 151.2, 168.6, 0.0); (396525.0, 3768689.0, 150.4, 172.2, 0.0);
(396575.0, 3768689.0, 153.1, 172.3, 0.0); (396625.0, 3768689.0, 149.9, 178.6, 0.0);

*** MODELOPTs: RegDFAULT CONC ELEV URBAN ADJ_U*

*** DISCRETE CARTESIAN RECEPTORS ***
(X-COORD, Y-COORD, ZELEV, ZHILL, ZFLAG)
(METERS)

```
     ( 396675.0, 3768689.0,     148.9,     178.6,       0.0);         ( 396725.0,
3768689.0,     144.4,     178.6,       0.0);
     ( 396775.0, 3768689.0,     141.2,     178.6,       0.0);         ( 396825.0,
3768689.0,     138.2,     178.6,       0.0);
     ( 396875.0, 3768689.0,     136.5,     178.6,       0.0);         ( 396925.0,
3768689.0,     133.2,     178.6,       0.0);
     ( 396975.0, 3768689.0,     130.8,     178.6,       0.0);         ( 397025.0,
3768689.0,     129.6,     178.6,       0.0);
     ( 397075.0, 3768689.0,     129.9,     178.6,       0.0);         ( 397125.0,
3768689.0,     121.8,     178.6,       0.0);
     ( 397175.0, 3768689.0,     128.4,     177.4,       0.0);         ( 397225.0,
3768689.0,     134.1,     177.3,       0.0);
     ( 397275.0, 3768689.0,     137.1,     165.7,       0.0);         ( 397325.0,
3768689.0,     142.0,     165.7,       0.0);
     ( 397375.0, 3768689.0,     146.7,     165.7,       0.0);         ( 397425.0,
3768689.0,     148.8,     165.7,       0.0);
     ( 397475.0, 3768689.0,     151.0,     165.7,       0.0);         ( 397525.0,
3768689.0,     152.7,     165.7,       0.0);
```

*** MODELOPTs: RegDFAULT CONC ELEV URBAN ADJ_U*

* SOURCE-RECEPTOR COMBINATIONS FOR WHICH CALCULATIONS MAY NOT BE PERFORMED *
LESS THAN 1.0 METER; WITHIN OPENPIT; OR BEYOND 80KM FOR FASTAREA/FASTALL

SOURCE ID	- - RECEPTOR LOCATION - - XR (METERS)	YR (METERS)	DISTANCE (METERS)
L0002000	396675.0	3767839.0	-9.62
L0002002	396725.0	3767839.0	-6.76
L0002003	396725.0	3767839.0	-5.09
L0002005	396775.0	3767839.0	-10.50
L0002007	396825.0	3767839.0	-7.41
L0002008	396825.0	3767839.0	-5.66
L0002010	396875.0	3767839.0	-9.08
L0002012	396925.0	3767839.0	-4.28
L0002013	396925.0	3767839.0	-1.74
L0002015	396975.0	3767839.0	-1.72
L0002077	397225.0	3767839.0	-3.68
L0002079	397275.0	3767839.0	-7.69
L0002080	397275.0	3767839.0	-2.41
L0002081	397325.0	3767839.0	-1.93
L0002082	397325.0	3767839.0	-10.88
L0002084	397375.0	3767839.0	-0.05
L0003749	397275.0	3768639.0	-4.59
L0003753	397275.0	3768689.0	-2.18

*** MODELOPTs: RegDFAULT CONC ELEV URBAN ADJ_U*

*** METEOROLOGICAL DAYS SELECTED FOR PROCESSING ***

(1=YES; 0=NO)

```
            1 1 1 1 1 1 1 1 1 1   1 1 1 1 1 1 1 1 1 1   1 1 1 1 1 1 1 1 1 1   1 1
1 1 1 1 1 1 1 1   1 1 1 1 1 1 1 1 1 1
            1 1 1 1 1 1 1 1 1 1   1 1 1 1 1 1 1 1 1 1   1 1 1 1 1 1 1 1 1 1   1 1
1 1 1 1 1 1 1 1   1 1 1 1 1 1 1 1 1 1
            1 1 1 1 1 1 1 1 1 1   1 1 1 1 1 1 1 1 1 1   1 1 1 1 1 1 1 1 1 1   1 1
1 1 1 1 1 1 1 1   1 1 1 1 1 1 1 1 1 1
            1 1 1 1 1 1 1 1 1 1   1 1 1 1 1 1 1 1 1 1   1 1 1 1 1 1 1 1 1 1   1 1
1 1 1 1 1 1 1 1   1 1 1 1 1 1 1 1 1 1
            1 1 1 1 1 1 1 1 1 1   1 1 1 1 1 1 1 1 1 1   1 1 1 1 1 1 1 1 1 1   1 1
1 1 1 1 1 1 1 1   1 1 1 1 1 1 1 1 1 1
            1 1 1 1 1 1 1 1 1 1   1 1 1 1 1 1 1 1 1 1   1 1 1 1 1 1 1 1 1 1   1 1
1 1 1 1 1 1 1 1   1 1 1 1 1 1 1 1 1 1
            1 1 1 1 1 1 1 1 1 1   1 1 1 1 1 1 1 1 1 1   1 1 1 1 1 1 1 1 1 1   1 1
1 1 1 1 1 1 1 1   1 1 1 1 1 1 1 1 1 1
            1 1 1 1 1 1 1 1 1 1   1 1 1 1 1 1 1 1 1 1   1 1 1 1 1 1 1 1 1 1   1 1
1 1 1 1 1 1 1 1   1 1 1 1 1 1 1 1 1 1
            1 1 1 1 1 1 1 1 1 1   1 1 1 1 1
```

NOTE: METEOROLOGICAL DATA ACTUALLY PROCESSED WILL ALSO DEPEND ON WHAT IS INCLUDED IN THE DATA FILE.

*** UPPER BOUND OF FIRST THROUGH FIFTH WIND SPEED CATEGORIES ***

(METERS/SEC)

1.54, 3.09, 5.14, 8.23, 10.80,

```
 *** AERMOD - VERSION 22112  ***   *** C:\Lakes\Project Files\Garvey\Garvey.isc
***        03/04/24
 *** AERMET - VERSION  16216 ***   ***
***        13:00:54

PAGE 446
 *** MODELOPTs:    RegDFAULT  CONC  ELEV  URBAN  ADJ_U*

                                   *** UP TO THE FIRST 24 HOURS OF
METEOROLOGICAL DATA ***

   Surface file:   PicoRiveraADJU\PICO_V9_ADJU\PICO_v9.SFC
Met Version:  16216
   Profile file:   PicoRiveraADJU\PICO_V9_ADJU\PICO_v9.PFL
   Surface format: FREE
   Profile format: FREE
   Surface station no.:     3166                  Upper air station no.:     3190
                  Name: SCAQMD_PICO_RIVERA                        Name: UNKNOWN
                  Year:   2010                                    Year:   2010

 First 24 hours of scalar data
 YR MO DY JDY HR     H0     U*     W*  DT/DZ ZICNV ZIMCH  M-O LEN    Z0  BOWEN
ALBEDO  REF WS   WD     HT  REF TA     HT
- - - - - - - - - - - - - - - - - - - - - - - - - - - - - - - - - - - - - - - - -
- - - - - - - - - - - - - - - - - - - -
 10 01 01   1 01  -38.6  0.384 -9.000 -9.000 -999.  572.    162.4  0.34   0.73
1.00    3.10  321.    9.1  283.8    5.5
 10 01 01   1 02  -33.5  0.333 -9.000 -9.000 -999.  462.    121.8  0.34   0.73
1.00    2.70  217.    9.1  282.5    5.5
 10 01 01   1 03  -21.9  0.218 -9.000 -9.000 -999.  251.     52.2  0.34   0.73
1.00    1.80  290.    9.1  282.5    5.5
 10 01 01   1 04  -27.1  0.269 -9.000 -9.000 -999.  334.     79.5  0.34   0.73
1.00    2.20  255.    9.1  282.0    5.5
 10 01 01   1 05  -21.9  0.218 -9.000 -9.000 -999.  245.     52.2  0.34   0.73
1.00    1.80  234.    9.1  282.0    5.5
 10 01 01   1 06  -27.1  0.269 -9.000 -9.000 -999.  334.     79.5  0.34   0.73
1.00    2.20  258.    9.1  282.0    5.5
 10 01 01   1 07  -27.2  0.269 -9.000 -9.000 -999.  334.     79.5  0.34   0.73
1.00    2.20  213.    9.1  281.4    5.5
 10 01 01   1 08  -22.6  0.335 -9.000 -9.000 -999.  466.    151.7  0.34   0.73
0.54    2.70  215.    9.1  282.0    5.5
 10 01 01   1 09   26.9  0.249  0.347  0.008   56.  302.    -51.9  0.34   0.73
0.32    1.80  199.    9.1  284.2    5.5
 10 01 01   1 10   65.3  0.365  0.593  0.008  116.  529.    -67.5  0.34   0.73
0.24    2.70  117.    9.1  288.1    5.5
 10 01 01   1 11   94.5  0.374  0.933  0.008  311.  550.    -50.3  0.34   0.73
0.21    2.70  243.    9.1  290.4    5.5
 10 01 01   1 12  103.9  0.279  1.087  0.008  448.  359.    -19.0  0.34   0.73
0.20    1.80  130.    9.1  293.1    5.5
 10 01 01   1 13   83.7  0.273  1.073  0.008  533.  343.    -22.0  0.34   0.73
0.20    1.80  282.    9.1  294.9    5.5
 10 01 01   1 14   82.0  0.218  1.112  0.008  606.  245.    -11.4  0.34   0.73
0.21    1.30  290.    9.1  295.9    5.5
 10 01 01   1 15   38.9  0.202  0.881  0.008  636.  217.    -19.0  0.34   0.73
0.25    1.30  192.    9.1  294.9    5.5
 10 01 01   1 16   11.4  0.181  0.588  0.008  643.  185.    -47.4  0.34   0.73
0.33    1.30  218.    9.1  293.8    5.5
 10 01 01   1 17  -10.7  0.155 -9.000 -9.000 -999.  147.     31.4  0.34   0.73
0.60    1.30  255.    9.1  292.0    5.5
```

```
 10 01 01   1 18   -5.5  0.104 -9.000 -9.000 -999.   81.     18.6  0.34   0.73
1.00    0.90  129.    9.1  289.2    5.5
 10 01 01   1 19  -11.8  0.154 -9.000 -9.000 -999.  145.     27.8  0.34   0.73
1.00    1.30  264.    9.1  287.5    5.5
 10 01 01   1 20  -11.8  0.154 -9.000 -9.000 -999.  144.     27.8  0.34   0.73
1.00    1.30   25.    9.1  287.0    5.5
 10 01 01   1 21  -21.6  0.218 -9.000 -9.000 -999.  244.     52.2  0.34   0.73
1.00    1.80  343.    9.1  285.9    5.5
 10 01 01   1 22  -21.7  0.218 -9.000 -9.000 -999.  244.     52.2  0.34   0.73
1.00    1.80  332.    9.1  284.9    5.5
 10 01 01   1 23  -21.7  0.218 -9.000 -9.000 -999.  244.     52.2  0.34   0.73
1.00    1.80  178.    9.1  284.2    5.5
 10 01 01   1 24  -11.8  0.154 -9.000 -9.000 -999.  145.     27.6  0.34   0.73
1.00    1.30   28.    9.1  283.1    5.5


 First hour of profile data
 YR MO DY HR HEIGHT F  WDIR    WSPD AMB_TMP sigmaA  sigmaW  sigmaV
 10 01 01 01    5.5 0 -999.  -99.00   283.8   99.0  -99.00  -99.00
 10 01 01 01    9.1 1  321.    3.10  -999.0   99.0  -99.00  -99.00

 F indicates top of profile (=1) or below (=0)
```

*** MODELOPTs: RegDFAULT CONC ELEV URBAN ADJ_U*

*** THE PERIOD (43848 HRS) AVERAGE CONCENTRATION VALUES FOR SOURCE GROUP: ABWQL ***
INCLUDING SOURCE(S): ABWQL ,

*** DISCRETE CARTESIAN RECEPTOR POINTS ***

** CONC OF PM_10 IN MICROGRAMS/M**3 **

X-COORD (M)	Y-COORD (M)	CONC	X-COORD (M)	Y-COORD (M)	CONC
396166.28	3767377.28	0.03903	396266.28	3767377.28	0.04323
396366.28	3767377.28	0.04950	396466.28	3767377.28	0.05613
396566.28	3767377.28	0.06437	396666.28	3767377.28	0.07185
396766.28	3767377.28	0.07859	396866.28	3767377.28	0.08594
396966.28	3767377.28	0.09493	397066.28	3767377.28	0.10095
397166.28	3767377.28	0.10293	397266.28	3767377.28	0.10161
397366.28	3767377.28	0.10172	397466.28	3767377.28	0.09967
397566.28	3767377.28	0.09443	397666.28	3767377.28	0.08767
397766.28	3767377.28	0.07835	397866.28	3767377.28	0.07023
396166.28	3767477.28	0.04115	396266.28	3767477.28	0.04541
396366.28	3767477.28	0.05285	396466.28	3767477.28	0.06113
396566.28	3767477.28	0.07070	396666.28	3767477.28	0.08100
396766.28	3767477.28	0.09219	396866.28	3767477.28	0.10444
396966.28	3767477.28	0.11919	397066.28	3767477.28	0.13093
397166.28	3767477.28	0.13675	397266.28	3767477.28	0.13673
397366.28	3767477.28	0.13500	397466.28	3767477.28	0.13166
397566.28	3767477.28	0.12294	397666.28	3767477.28	0.11126
397766.28	3767477.28	0.09843	397866.28	3767477.28	0.08594
396166.28	3767577.28	0.04245	396266.28		

3767577.28 0.04773
396366.28 3767577.28 0.05529 396466.28
3767577.28 0.06511
396566.28 3767577.28 0.07739 396666.28
3767577.28 0.09230
396766.28 3767577.28 0.10627 396866.28
3767577.28 0.12804
396966.28 3767577.28 0.15123 397066.28
3767577.28 0.17345
397166.28 3767577.28 0.18975 397266.28
3767577.28 0.19439
397366.28 3767577.28 0.19091 397466.28
3767577.28 0.18419
397566.28 3767577.28 0.16725 397666.28
3767577.28 0.14626
397766.28 3767577.28 0.12457 397866.28
3767577.28 0.10489
396166.28 3767677.28 0.04399 396266.28
3767677.28 0.04988
396366.28 3767677.28 0.05836 396466.28
3767677.28 0.06960
396566.28 3767677.28 0.08349 396666.28
3767677.28 0.09913
396766.28 3767677.28 0.12346 396866.28
3767677.28 0.15792
396966.28 3767677.28 0.19978 397066.28
3767677.28 0.24145
397166.28 3767677.28 0.27876 397266.28
3767677.28 0.30250
397366.28 3767677.28 0.29638 397466.28
3767677.28 0.27836
397566.28 3767677.28 0.24112 397666.28
3767677.28 0.19886
397766.28 3767677.28 0.16020 397866.28
3767677.28 0.12829
396166.28 3767777.28 0.04500 396266.28
3767777.28 0.05213
396366.28 3767777.28 0.06087 396466.28
3767777.28 0.07270
396566.28 3767777.28 0.08730 396666.28
3767777.28 0.10822
396766.28 3767777.28 0.14144 396866.28
3767777.28 0.18943

```
 *** AERMOD - VERSION 22112  ***   *** C:\Lakes\Project Files\Garvey\Garvey.isc
***        03/04/24
 *** AERMET - VERSION  16216 ***   ***
***        13:00:54

PAGE 448
 *** MODELOPTs:    RegDFAULT  CONC  ELEV  URBAN  ADJ_U*

                              *** THE PERIOD ( 43848 HRS) AVERAGE CONCENTRATION
VALUES FOR SOURCE GROUP: ABWQL    ***
                                  INCLUDING SOURCE(S):     ABWQL       ,

                                            *** DISCRETE CARTESIAN RECEPTOR
POINTS ***

                                       ** CONC OF PM_10    IN MICROGRAMS/M**3
**

       X-COORD (M)   Y-COORD (M)        CONC                       X-COORD (M)
Y-COORD (M)        CONC
 - - - - - - - - - - - - - - - - - - - - - - - - - - - - - - - - - - - - - - - - - -
- - - - - - - - - - - - - - - - - - - - - - - - -
         396966.28    3767777.28        0.25653                     397066.28
3767777.28        0.34466
         397166.28    3767777.28        0.44132                     397266.28
3767777.28        0.52038
         397366.28    3767777.28        0.52658                     397466.28
3767777.28        0.45775
         397566.28    3767777.28        0.36463                     397666.28
3767777.28        0.27976
         397766.28    3767777.28        0.20811                     397866.28
3767777.28        0.15740
         396166.28    3767877.28        0.04562                     396266.28
3767877.28        0.05309
         396366.28    3767877.28        0.06260                     396466.28
3767877.28        0.07478
         396566.28    3767877.28        0.09106                     397466.28
3767877.28        0.93670
         397566.28    3767877.28        0.58869                     397666.28
3767877.28        0.35281
         397766.28    3767877.28        0.24058                     397866.28
3767877.28        0.18949
         396166.28    3767977.28        0.04561                     396266.28
3767977.28        0.05334
         396366.28    3767977.28        0.06312                     396466.28
3767977.28        0.07551
         397466.28    3767977.28        1.94271                     397566.28
3767977.28        0.86904
         397666.28    3767977.28        0.45999                     397766.28
3767977.28        0.33557
         397866.28    3767977.28        0.21871                     396166.28
3768077.28        0.04595
         396266.28    3768077.28        0.05308                     396366.28
3768077.28        0.06282
         396466.28    3768077.28        0.07602                     397466.28
3768077.28        6.19882
         397566.28    3768077.28        1.73939                     397666.28
3768077.28        0.74320
         397766.28    3768077.28        0.40712                     397866.28
```

3768077.28 0.25408
396166.28 3768177.28 0.04553 396266.28
3768177.28 0.05276
396366.28 3768177.28 0.06235 396466.28
3768177.28 0.07494
397466.28 3768177.28 7.81478 397566.28
3768177.28 2.16973
397666.28 3768177.28 0.89692 397766.28
3768177.28 0.48292
397866.28 3768177.28 0.28679 396166.28
3768277.28 0.04294
396266.28 3768277.28 0.05149 396366.28
3768277.28 0.06065
396466.28 3768277.28 0.07267 397366.28
3768277.28 4.03101
397466.28 3768277.28 3.48257 397566.28
3768277.28 1.84597
397666.28 3768277.28 0.91167 397766.28
3768277.28 0.51002
397866.28 3768277.28 0.32391 396166.28
3768377.28 0.03991
396266.28 3768377.28 0.04993 396366.28
3768377.28 0.05839
396466.28 3768377.28 0.06950 397266.28
3768377.28 1.08273
397366.28 3768377.28 1.62668 397466.28
3768377.28 1.69200
397566.28 3768377.28 1.25806 397666.28
3768377.28 0.80891
397766.28 3768377.28 0.51040 397866.28
3768377.28 0.34215
396166.28 3768477.28 0.03835 396266.28
3768477.28 0.04752
396366.28 3768477.28 0.05322 396466.28
3768477.28 0.06553
397166.28 3768477.28 0.43272 397266.28
3768477.28 0.64554
397366.28 3768477.28 0.86111 397466.28
3768477.28 0.91743
397566.28 3768477.28 0.81286 397666.28
3768477.28 0.61073
397766.28 3768477.28 0.44544 397866.28
3768477.28 0.31857

*** MODELOPTs: RegDFAULT CONC ELEV URBAN ADJ_U*

*** THE PERIOD (43848 HRS) AVERAGE CONCENTRATION VALUES FOR SOURCE GROUP: ABWQL ***
INCLUDING SOURCE(S): ABWQL ,

*** DISCRETE CARTESIAN RECEPTOR POINTS ***

** CONC OF PM_10 IN MICROGRAMS/M**3 **

X-COORD (M)	Y-COORD (M)	CONC	X-COORD (M)	Y-COORD (M)	CONC
396166.28	3768577.28	0.04004	396266.28	3768577.28	0.04122
396366.28	3768577.28	0.04733	396466.28	3768577.28	0.06116
396566.28	3768577.28	0.07134	396866.28	3768577.28	0.13504
396966.28	3768577.28	0.17460	397066.28	3768577.28	0.23050
397166.28	3768577.28	0.31361	397266.28	3768577.28	0.42116
397366.28	3768577.28	0.53034	397466.28	3768577.28	0.55872
397566.28	3768577.28	0.54709	397666.28	3768577.28	0.45970
397766.28	3768577.28	0.35841	397866.28	3768577.28	0.27648
396166.28	3768677.28	0.03809	396266.28	3768677.28	0.04312
396366.28	3768677.28	0.04509	396466.28	3768677.28	0.05664
396566.28	3768677.28	0.06610	396666.28	3768677.28	0.07825
396766.28	3768677.28	0.09405	396866.28	3768677.28	0.11540
396966.28	3768677.28	0.14413	397066.28	3768677.28	0.18303
397166.28	3768677.28	0.23276	397366.28	3768677.28	0.35839
397466.28	3768677.28	0.39330	397566.28	3768677.28	0.38655
397666.28	3768677.28	0.34615	397766.28	3768677.28	0.28879
397866.28	3768677.28	0.23503	396166.28	3768777.28	0.03627
396266.28	3768777.28	0.04058	396366.28	3768777.28	0.04339
396466.28	3768777.28	0.05235	396566.28		

3768777.28 0.06011
396666.28 3768777.28 0.07005 396766.28
3768777.28 0.08289
396866.28 3768777.28 0.09947 396966.28
3768777.28 0.12055
397066.28 3768777.28 0.14727 397166.28
3768777.28 0.17927
397266.28 3768777.28 0.21899 397366.28
3768777.28 0.25593
397466.28 3768777.28 0.27918 397566.28
3768777.28 0.28126
397666.28 3768777.28 0.26254 397766.28
3768777.28 0.23067
397866.28 3768777.28 0.19662 396166.28
3768877.28 0.03418
396266.28 3768877.28 0.03818 396366.28
3768877.28 0.04263
396466.28 3768877.28 0.04839 396566.28
3768877.28 0.05505
396666.28 3768877.28 0.06311 396766.28
3768877.28 0.07362
396866.28 3768877.28 0.08757 396966.28
3768877.28 0.10340
397066.28 3768877.28 0.12140 397166.28
3768877.28 0.14311
397266.28 3768877.28 0.16856 397366.28
3768877.28 0.19135
397466.28 3768877.28 0.20791 397566.28
3768877.28 0.21272
397666.28 3768877.28 0.20306 397766.28
3768877.28 0.18515
397866.28 3768877.28 0.16420 396425.00
3767739.00 0.06665
396475.00 3767739.00 0.07293 396525.00
3767739.00 0.07958
396575.00 3767739.00 0.08801 396625.00
3767739.00 0.09575
396675.00 3767739.00 0.10667 396725.00
3767739.00 0.12226
396775.00 3767739.00 0.13713 396825.00
3767739.00 0.15789
396875.00 3767739.00 0.18221 396925.00
3767739.00 0.20895

*** MODELOPTs: RegDFAULT CONC ELEV URBAN ADJ_U*

*** THE PERIOD (43848 HRS) AVERAGE CONCENTRATION VALUES FOR SOURCE GROUP: ABWQL ***
INCLUDING SOURCE(S): ABWQL ,

*** DISCRETE CARTESIAN RECEPTOR POINTS ***

** CONC OF PM_10 IN MICROGRAMS/M**3 **

X-COORD (M)	Y-COORD (M)	CONC	X-COORD (M)	Y-COORD (M)	CONC
396975.00	3767739.00	0.23928	397025.00	3767739.00	0.27236
397075.00	3767739.00	0.30629	397125.00	3767739.00	0.33975
397175.00	3767739.00	0.37187	397225.00	3767739.00	0.39812
397275.00	3767739.00	0.41779	397325.00	3767739.00	0.42081
397375.00	3767739.00	0.41143	397425.00	3767739.00	0.39456
397475.00	3767739.00	0.37133	397525.00	3767739.00	0.33994
396425.00	3767789.00	0.06789	396475.00	3767789.00	0.07417
396525.00	3767789.00	0.08111	396575.00	3767789.00	0.08907
396625.00	3767789.00	0.09911	396675.00	3767789.00	0.11178
396725.00	3767789.00	0.12861	396775.00	3767789.00	0.14681
396825.00	3767789.00	0.17019	396875.00	3767789.00	0.19800
396925.00	3767789.00	0.23111	396975.00	3767789.00	0.27095
397025.00	3767789.00	0.31713	397075.00	3767789.00	0.36857
397125.00	3767789.00	0.42268	397175.00	3767789.00	0.47690
397225.00	3767789.00	0.52477	397275.00	3767789.00	0.56435
397325.00	3767789.00	0.57814	397375.00	3767789.00	0.56584
397425.00	3767789.00	0.53481	397475.00	3767789.00	0.47980
397525.00	3767789.00	0.43320	396425.00	3767839.00	0.06892
396475.00	3767839.00	0.07564	396525.00		

3767839.00 0.08231
396575.00 3767839.00 0.09129 396625.00
3767839.00 0.10217
396675.00 3767839.00 0.11774 396725.00
3767839.00 0.13476
396775.00 3767839.00 0.15536 396825.00
3767839.00 0.18109
396875.00 3767839.00 0.21320 396925.00
3767839.00 0.25319
396975.00 3767839.00 0.30328 397025.00
3767839.00 0.36454
397075.00 3767839.00 0.44065 397125.00
3767839.00 0.52556
397175.00 3767839.00 0.62421 397225.00
3767839.00 0.72238
397275.00 3767839.00 0.79037 397325.00
3767839.00 0.80478
397375.00 3767839.00 0.82620 397475.00
3767839.00 0.68308
397525.00 3767839.00 0.56166 396425.00
3767889.00 0.06968
396475.00 3767889.00 0.07571 396525.00
3767889.00 0.08364
396575.00 3767889.00 0.09370 397475.00
3767889.00 0.97742
397525.00 3767889.00 0.71680 396425.00
3767939.00 0.07019
396475.00 3767939.00 0.07641 396525.00
3767939.00 0.08482
397475.00 3767939.00 1.30652 397525.00
3767939.00 0.96034
396425.00 3767989.00 0.06996 396475.00
3767989.00 0.07694
397475.00 3767989.00 1.95803 397525.00
3767989.00 1.28155
396425.00 3768039.00 0.07001 396475.00
3768039.00 0.07728
397475.00 3768039.00 3.52779 397525.00
3768039.00 2.11512
396425.00 3768089.00 0.06995 396475.00
3768089.00 0.07733
397475.00 3768089.00 5.86514 397525.00
3768089.00 2.97383

*** MODELOPTs: RegDFAULT CONC ELEV URBAN ADJ_U*

*** THE PERIOD (43848 HRS) AVERAGE CONCENTRATION VALUES FOR SOURCE GROUP: ABWQL ***
INCLUDING SOURCE(S): ABWQL ,

*** DISCRETE CARTESIAN RECEPTOR POINTS ***

** CONC OF PM_10 IN MICROGRAMS/M**3 **

X-COORD (M)	Y-COORD (M)	CONC	X-COORD (M)	Y-COORD (M)	CONC
396425.00	3768139.00	0.07006	396475.00	3768139.00	0.07683
397425.00	3768139.00	23.71768	397475.00	3768139.00	7.75759
397525.00	3768139.00	3.48597	396425.00	3768189.00	0.06931
396475.00	3768189.00	0.07602	397375.00	3768189.00	16.35039
397425.00	3768189.00	11.34735	397475.00	3768189.00	6.44656
397525.00	3768189.00	3.45576	396425.00	3768239.00	0.06832
396475.00	3768239.00	0.07492	397375.00	3768239.00	6.75104
397425.00	3768239.00	5.57018	397475.00	3768239.00	4.01328
397525.00	3768239.00	2.70572	396425.00	3768289.00	0.06704
396475.00	3768289.00	0.07355	397325.00	3768289.00	2.91333
397375.00	3768289.00	3.63165	397425.00	3768289.00	3.69960
397475.00	3768289.00	3.11895	397525.00	3768289.00	2.32518
396425.00	3768339.00	0.06575	396475.00	3768339.00	0.07197
396525.00	3768339.00	0.07952	397275.00	3768339.00	1.44004
397325.00	3768339.00	1.88427	397375.00	3768339.00	2.25109
397425.00	3768339.00	2.35629	397475.00	3768339.00	2.16354
397525.00	3768339.00	1.80290	396425.00	3768389.00	0.06418
396475.00	3768389.00	0.07014	396525.00	3768389.00	0.07724
397225.00	3768389.00	0.82456	397275.00		

3768389.00 1.05600
397325.00 3768389.00 1.31147 397375.00
3768389.00 1.52436
397425.00 3768389.00 1.61059 397475.00
3768389.00 1.54596
397525.00 3768389.00 1.36914 396425.00
3768439.00 0.06258
396475.00 3768439.00 0.06816 396525.00
3768439.00 0.07477
397175.00 3768439.00 0.51986 397225.00
3768439.00 0.65348
397275.00 3768439.00 0.80395 397325.00
3768439.00 0.96120
397375.00 3768439.00 1.09702 397425.00
3768439.00 1.16928
397475.00 3768439.00 1.14909 397525.00
3768439.00 1.05960
396425.00 3768489.00 0.06075 396475.00
3768489.00 0.06599
396525.00 3768489.00 0.07217 397075.00
3768489.00 0.29508
397125.00 3768489.00 0.35375 397175.00
3768489.00 0.43030
397225.00 3768489.00 0.52577 397275.00
3768489.00 0.63023
397325.00 3768489.00 0.72897 397375.00
3768489.00 0.82143
397425.00 3768489.00 0.86292 397475.00
3768489.00 0.85255
397525.00 3768489.00 0.81957 396425.00
3768539.00 0.05884
396475.00 3768539.00 0.06377 396525.00
3768539.00 0.06946
396575.00 3768539.00 0.07521 397025.00
3768539.00 0.22188
397075.00 3768539.00 0.25974 397125.00
3768539.00 0.30552
397175.00 3768539.00 0.36309 397225.00
3768539.00 0.43014
397275.00 3768539.00 0.50623 397325.00
3768539.00 0.57569
397375.00 3768539.00 0.63959 397425.00
3768539.00 0.66326

*** MODELOPTs: RegDFAULT CONC ELEV URBAN ADJ_U*

*** THE PERIOD (43848 HRS) AVERAGE CONCENTRATION VALUES FOR SOURCE GROUP: ABWQL ***
INCLUDING SOURCE(S): ABWQL ,

*** DISCRETE CARTESIAN RECEPTOR POINTS ***

** CONC OF PM_10 IN MICROGRAMS/M**3 **

X-COORD (M)	Y-COORD (M)	CONC	X-COORD (M)	Y-COORD (M)	CONC
397475.00	3768539.00	0.66650	397525.00	3768539.00	0.64527
396425.00	3768589.00	0.05642	396475.00	3768589.00	0.06148
396525.00	3768589.00	0.06640	396575.00	3768589.00	0.06957
396625.00	3768589.00	0.07540	396825.00	3768589.00	0.12035
396875.00	3768589.00	0.13551	396925.00	3768589.00	0.15283
396975.00	3768589.00	0.17483	397025.00	3768589.00	0.20060
397075.00	3768589.00	0.23002	397125.00	3768589.00	0.26742
397175.00	3768589.00	0.31055	397225.00	3768589.00	0.35882
397275.00	3768589.00	0.41179	397325.00	3768589.00	0.46661
397375.00	3768589.00	0.51157	397425.00	3768589.00	0.52504
397475.00	3768589.00	0.53103	397525.00	3768589.00	0.52248
396425.00	3768639.00	0.05194	396475.00	3768639.00	0.05914
396525.00	3768639.00	0.06113	396575.00	3768639.00	0.06843
396625.00	3768639.00	0.07490	396675.00	3768639.00	0.08253
396725.00	3768639.00	0.09122	396775.00	3768639.00	0.10086
396825.00	3768639.00	0.11215	396875.00	3768639.00	0.12523
396925.00	3768639.00	0.14046	396975.00	3768639.00	0.15887
397025.00	3768639.00	0.18008	397075.00	3768639.00	0.20374
397125.00	3768639.00	0.22945	397175.00		

3768639.00 0.26593
397225.00 3768639.00 0.30343 397275.00
3768639.00 0.34412
397325.00 3768639.00 0.38455 397375.00
3768639.00 0.41836
397425.00 3768639.00 0.44265 397475.00
3768639.00 0.43341
397525.00 3768639.00 0.43183 396425.00
3768689.00 0.04899
396475.00 3768689.00 0.05683 396525.00
3768689.00 0.06125
396575.00 3768689.00 0.06630 396625.00
3768689.00 0.07195
396675.00 3768689.00 0.07844 396725.00
3768689.00 0.08577
396775.00 3768689.00 0.09424 396825.00
3768689.00 0.10405
396875.00 3768689.00 0.11555 396925.00
3768689.00 0.12867
396975.00 3768689.00 0.14389 397025.00
3768689.00 0.16157
397075.00 3768689.00 0.18213 397125.00
3768689.00 0.20204
397175.00 3768689.00 0.23023 397225.00
3768689.00 0.26043
397275.00 3768689.00 0.29104 397325.00
3768689.00 0.32152
397375.00 3768689.00 0.34811 397425.00
3768689.00 0.36773
397475.00 3768689.00 0.37833 397525.00
3768689.00 0.37878

*** MODELOPTs: RegDFAULT CONC ELEV URBAN ADJ_U*

*** THE PERIOD (43848 HRS) AVERAGE CONCENTRATION VALUES FOR SOURCE GROUP: EG ***
INCLUDING SOURCE(S): EG ,

*** DISCRETE CARTESIAN RECEPTOR POINTS ***

** CONC OF PM_10 IN MICROGRAMS/M**3 **

X-COORD (M)	Y-COORD (M)	CONC	X-COORD (M)	Y-COORD (M)	CONC
396166.28	3767377.28	0.04003	396266.28	3767377.28	0.04436
396366.28	3767377.28	0.05087	396466.28	3767377.28	0.05769
396566.28	3767377.28	0.06616	396666.28	3767377.28	0.07357
396766.28	3767377.28	0.08002	396866.28	3767377.28	0.08692
396966.28	3767377.28	0.09539	397066.28	3767377.28	0.10086
397166.28	3767377.28	0.10221	397266.28	3767377.28	0.10035
397366.28	3767377.28	0.10015	397466.28	3767377.28	0.09779
397566.28	3767377.28	0.09216	397666.28	3767377.28	0.08518
397766.28	3767377.28	0.07580	397866.28	3767377.28	0.06781
396166.28	3767477.28	0.04231	396266.28	3767477.28	0.04673
396366.28	3767477.28	0.05452	396466.28	3767477.28	0.06318
396566.28	3767477.28	0.07310	396666.28	3767477.28	0.08358
396766.28	3767477.28	0.09472	396866.28	3767477.28	0.10659
396966.28	3767477.28	0.12069	397066.28	3767477.28	0.13147
397166.28	3767477.28	0.13608	397266.28	3767477.28	0.13494
397366.28	3767477.28	0.13243	397466.28	3767477.28	0.12851
397566.28	3767477.28	0.11923	397666.28	3767477.28	0.10728
397766.28	3767477.28	0.09455	397866.28	3767477.28	0.08243
396166.28	3767577.28	0.04372	396266.28		

3767577.28 0.04924
396366.28 3767577.28 0.05720 396466.28
3767577.28 0.06756
396566.28 3767577.28 0.08053 396666.28
3767577.28 0.09615
396766.28 3767577.28 0.11029 396866.28
3767577.28 0.13230
396966.28 3767577.28 0.15489 397066.28
3767577.28 0.17555
397166.28 3767577.28 0.18963 397266.28
3767577.28 0.19179
397366.28 3767577.28 0.18642 397466.28
3767577.28 0.17848
397566.28 3767577.28 0.16061 397666.28
3767577.28 0.13958
397766.28 3767577.28 0.11849 397866.28
3767577.28 0.09976
396166.28 3767677.28 0.04541 396266.28
3767677.28 0.05159
396366.28 3767677.28 0.06059 396466.28
3767677.28 0.07259
396566.28 3767677.28 0.08739 396666.28
3767677.28 0.10390
396766.28 3767677.28 0.12967 396866.28
3767677.28 0.16590
396966.28 3767677.28 0.20880 397066.28
3767677.28 0.24857
397166.28 3767677.28 0.28133 397266.28
3767677.28 0.29977
397366.28 3767677.28 0.28765 397466.28
3767677.28 0.26688
397566.28 3767677.28 0.22807 397666.28
3767677.28 0.18685
397766.28 3767677.28 0.15038 397866.28
3767677.28 0.12069
396166.28 3767777.28 0.04653 396266.28
3767777.28 0.05410
396366.28 3767777.28 0.06340 396466.28
3767777.28 0.07607
396566.28 3767777.28 0.09171 396666.28
3767777.28 0.11429
396766.28 3767777.28 0.15044 396866.28
3767777.28 0.20283

*** MODELOPTs: RegDFAULT CONC ELEV URBAN ADJ_U*

*** THE PERIOD (43848 HRS) AVERAGE CONCENTRATION VALUES FOR SOURCE GROUP: EG ***
INCLUDING SOURCE(S): EG ,

*** DISCRETE CARTESIAN RECEPTOR POINTS ***

** CONC OF PM_10 IN MICROGRAMS/M**3 **

X-COORD (M)	Y-COORD (M)	CONC	X-COORD (M)	Y-COORD (M)	CONC
396966.28	3767777.28	0.27509	397066.28	3767777.28	0.36549
397166.28	3767777.28	0.45591	397266.28	3767777.28	0.52031
397366.28	3767777.28	0.50661	397466.28	3767777.28	0.43996
397566.28	3767777.28	0.34364	397666.28	3767777.28	0.25698
397766.28	3767777.28	0.19218	397866.28	3767777.28	0.14641
396166.28	3767877.28	0.04723	396266.28	3767877.28	0.05518
396366.28	3767877.28	0.06537	396466.28	3767877.28	0.07845
396566.28	3767877.28	0.09605	397466.28	3767877.28	0.83488
397566.28	3767877.28	0.53120	397666.28	3767877.28	0.32542
397766.28	3767877.28	0.22478	397866.28	3767877.28	0.17398
396166.28	3767977.28	0.04723	396266.28	3767977.28	0.05548
396366.28	3767977.28	0.06598	396466.28	3767977.28	0.07932
397466.28	3767977.28	1.64003	397566.28	3767977.28	0.75296
397666.28	3767977.28	0.41308	397766.28	3767977.28	0.29800
397866.28	3767977.28	0.19822	396166.28	3768077.28	0.04764
396266.28	3768077.28	0.05522	396366.28	3768077.28	0.06568
396466.28	3768077.28	0.07997	397466.28	3768077.28	4.12618
397566.28	3768077.28	1.33937	397666.28	3768077.28	0.62136
397766.28	3768077.28	0.35618	397866.28		

3768077.28 0.22816
396166.28 3768177.28 0.04722 396266.28
3768177.28 0.05492
396366.28 3768177.28 0.06524 396466.28
3768177.28 0.07884
397466.28 3768177.28 5.43116 397566.28
3768177.28 1.67242
397666.28 3768177.28 0.74229 397766.28
3768177.28 0.41769
397866.28 3768177.28 0.25546 396166.28
3768277.28 0.04596
396266.28 3768277.28 0.05356 396366.28
3768277.28 0.06340
396466.28 3768277.28 0.07638 397366.28
3768277.28 4.37923
397466.28 3768277.28 3.05653 397566.28
3768277.28 1.54836
397666.28 3768277.28 0.77799 397766.28
3768277.28 0.44569
397866.28 3768277.28 0.28884 396166.28
3768377.28 0.04221
396266.28 3768377.28 0.05190 396366.28
3768377.28 0.06096
396466.28 3768377.28 0.07294 397266.28
3768377.28 1.24828
397366.28 3768377.28 1.74264 397466.28
3768377.28 1.62846
397566.28 3768377.28 1.14192 397666.28
3768377.28 0.72264
397766.28 3768377.28 0.45726 397866.28
3768377.28 0.30969
396166.28 3768477.28 0.04041 396266.28
3768477.28 0.04959
396366.28 3768477.28 0.05748 396466.28
3768477.28 0.06859
397166.28 3768477.28 0.47913 397266.28
3768477.28 0.71372
397366.28 3768477.28 0.91601 397466.28
3768477.28 0.92299
397566.28 3768477.28 0.77035 397666.28
3768477.28 0.56543
397766.28 3768477.28 0.41114 397866.28
3768477.28 0.29371

*** MODELOPTs: RegDFAULT CONC ELEV URBAN ADJ_U*

*** THE PERIOD (43848 HRS) AVERAGE CONCENTRATION VALUES FOR SOURCE GROUP: EG ***
INCLUDING SOURCE(S): EG ,

*** DISCRETE CARTESIAN RECEPTOR POINTS ***

** CONC OF PM_10 IN MICROGRAMS/M**3 **

X-COORD (M)	Y-COORD (M)	CONC	X-COORD (M)	Y-COORD (M)	CONC
396166.28	3768577.28	0.04133	396266.28	3768577.28	0.04340
396366.28	3768577.28	0.05006	396466.28	3768577.28	0.06384
396566.28	3768577.28	0.07524	396866.28	3768577.28	0.14437
396966.28	3768577.28	0.18798	397066.28	3768577.28	0.24928
397166.28	3768577.28	0.33989	397266.28	3768577.28	0.45318
397366.28	3768577.28	0.55779	397466.28	3768577.28	0.57121
397566.28	3768577.28	0.53327	397666.28	3768577.28	0.43710
397766.28	3768577.28	0.33695	397866.28	3768577.28	0.25922
396166.28	3768677.28	0.03925	396266.28	3768677.28	0.04456
396366.28	3768677.28	0.04777	396466.28	3768677.28	0.05892
396566.28	3768677.28	0.06906	396666.28	3768677.28	0.08212
396766.28	3768677.28	0.09917	396866.28	3768677.28	0.12232
396966.28	3768677.28	0.15342	397066.28	3768677.28	0.19526
397166.28	3768677.28	0.24811	397366.28	3768677.28	0.37378
397466.28	3768677.28	0.39952	397566.28	3768677.28	0.38207
397666.28	3768677.28	0.33490	397766.28	3768677.28	0.27578
397866.28	3768677.28	0.22337	396166.28	3768777.28	0.03732
396266.28	3768777.28	0.04184	396366.28	3768777.28	0.04554
396466.28	3768777.28	0.05431	396566.28		

3768777.28 0.06253
396666.28 3768777.28 0.07314 396766.28
3768777.28 0.08691
396866.28 3768777.28 0.10467 396966.28
3768777.28 0.12711
397066.28 3768777.28 0.15540 397166.28
3768777.28 0.18891
397266.28 3768777.28 0.22972 397366.28
3768777.28 0.26512
397466.28 3768777.28 0.28360 397566.28
3768777.28 0.27970
397666.28 3768777.28 0.25647 397766.28
3768777.28 0.22271
397866.28 3768777.28 0.18874 396166.28
3768877.28 0.03509
396266.28 3768877.28 0.03929 396366.28
3768877.28 0.04395
396466.28 3768877.28 0.05008 396566.28
3768877.28 0.05711
396666.28 3768877.28 0.06565 396766.28
3768877.28 0.07682
396866.28 3768877.28 0.09166 396966.28
3768877.28 0.10829
397066.28 3768877.28 0.12707 397166.28
3768877.28 0.14959
397266.28 3768877.28 0.17547 397366.28
3768877.28 0.19727
397466.28 3768877.28 0.21133 397566.28
3768877.28 0.21271
397666.28 3768877.28 0.19996 397766.28
3768877.28 0.18028
397866.28 3768877.28 0.15885 396425.00
3767739.00 0.06954
396475.00 3767739.00 0.07627 396525.00
3767739.00 0.08335
396575.00 3767739.00 0.09241 396625.00
3767739.00 0.10064
396675.00 3767739.00 0.11237 396725.00
3767739.00 0.12925
396775.00 3767739.00 0.14515 396825.00
3767739.00 0.16756
396875.00 3767739.00 0.19376 396925.00
3767739.00 0.22211

*** MODELOPTs: RegDFAULT CONC ELEV URBAN ADJ_U*

*** THE PERIOD (43848 HRS) AVERAGE CONCENTRATION VALUES FOR SOURCE GROUP: EG ***
INCLUDING SOURCE(S): EG ,

*** DISCRETE CARTESIAN RECEPTOR POINTS ***

** CONC OF PM_10 IN MICROGRAMS/M**3 **

X-COORD (M)	Y-COORD (M)	CONC	X-COORD (M)	Y-COORD (M)	CONC
396975.00	3767739.00	0.25369	397025.00	3767739.00	0.28714
397075.00	3767739.00	0.31996	397125.00	3767739.00	0.35075
397175.00	3767739.00	0.37891	397225.00	3767739.00	0.39993
397275.00	3767739.00	0.41458	397325.00	3767739.00	0.41116
397375.00	3767739.00	0.39635	397425.00	3767739.00	0.37566
397475.00	3767739.00	0.35282	397525.00	3767739.00	0.31995
396425.00	3767789.00	0.07094	396475.00	3767789.00	0.07766
396525.00	3767789.00	0.08509	396575.00	3767789.00	0.09364
396625.00	3767789.00	0.10448	396675.00	3767789.00	0.11822
396725.00	3767789.00	0.13664	396775.00	3767789.00	0.15646
396825.00	3767789.00	0.18210	396875.00	3767789.00	0.21254
396925.00	3767789.00	0.24848	396975.00	3767789.00	0.29145
397025.00	3767789.00	0.33997	397075.00	3767789.00	0.39194
397125.00	3767789.00	0.44399	397175.00	3767789.00	0.49321
397225.00	3767789.00	0.53272	397275.00	3767789.00	0.56322
397325.00	3767789.00	0.56534	397375.00	3767789.00	0.54170
397425.00	3767789.00	0.50329	397475.00	3767789.00	0.46137
397525.00	3767789.00	0.40692	396425.00	3767839.00	0.07212
396475.00	3767839.00	0.07934	396525.00		

3767839.00 0.08648
396575.00 3767839.00 0.09619 396625.00
3767839.00 0.10801
396675.00 3767839.00 0.12515 396725.00
3767839.00 0.14389
396775.00 3767839.00 0.16665 396825.00
3767839.00 0.19523
396875.00 3767839.00 0.23099 396925.00
3767839.00 0.27546
396975.00 3767839.00 0.33125 397025.00
3767839.00 0.39895
397075.00 3767839.00 0.47858 397125.00
3767839.00 0.56419
397175.00 3767839.00 0.66057 397225.00
3767839.00 0.75014
397275.00 3767839.00 0.80693 397325.00
3767839.00 0.81012
397375.00 3767839.00 0.78516 397475.00
3767839.00 0.62132
397525.00 3767839.00 0.52119 396425.00
3767889.00 0.07299
396475.00 3767889.00 0.07943 396525.00
3767889.00 0.08801
396575.00 3767889.00 0.09898 397475.00
3767889.00 0.88300
397525.00 3767889.00 0.67214 396425.00
3767939.00 0.07359
396475.00 3767939.00 0.08025 396525.00
3767939.00 0.08939
397475.00 3767939.00 1.19851 397525.00
3767939.00 0.84511
396425.00 3767989.00 0.07333 396475.00
3767989.00 0.08088
397475.00 3767989.00 1.63055 397525.00
3767989.00 1.08159
396425.00 3768039.00 0.07342 396475.00
3768039.00 0.08130
397475.00 3768039.00 2.69699 397525.00
3768039.00 1.66895
396425.00 3768089.00 0.07339 396475.00
3768089.00 0.08141
397475.00 3768089.00 3.93761 397525.00
3768089.00 2.14066

*** MODELOPTs: RegDFAULT CONC ELEV URBAN ADJ_U*

*** THE PERIOD (43848 HRS) AVERAGE CONCENTRATION VALUES FOR SOURCE GROUP: EG ***
INCLUDING SOURCE(S): EG ,

*** DISCRETE CARTESIAN RECEPTOR POINTS ***

** CONC OF PM_10 IN MICROGRAMS/M**3 **

X-COORD (M)	Y-COORD (M)	CONC	X-COORD (M)	Y-COORD (M)	CONC
396425.00	3768139.00	0.07359	396475.00	3768139.00	0.08089
397425.00	3768139.00	12.86591	397475.00	3768139.00	4.98314
397525.00	3768139.00	2.49640	396425.00	3768189.00	0.07278
396475.00	3768189.00	0.08003	397375.00	3768189.00	15.95740
397425.00	3768189.00	8.45639	397475.00	3768189.00	4.65646
397525.00	3768189.00	2.59117	396425.00	3768239.00	0.07170
396475.00	3768239.00	0.07883	397375.00	3768239.00	7.10260
397425.00	3768239.00	4.91119	397475.00	3768239.00	3.28818
397525.00	3768239.00	2.18215	396425.00	3768289.00	0.07030
396475.00	3768289.00	0.07734	397325.00	3768289.00	3.42287
397375.00	3768289.00	3.85722	397425.00	3768289.00	3.53689
397475.00	3768289.00	2.76435	397525.00	3768289.00	1.98736
396425.00	3768339.00	0.06891	396475.00	3768339.00	0.07561
396525.00	3768339.00	0.08385	397275.00	3768339.00	1.69537
397325.00	3768339.00	2.13979	397375.00	3768339.00	2.39148
397425.00	3768339.00	2.33184	397475.00	3768339.00	2.01968
397525.00	3768339.00	1.62172	396425.00	3768389.00	0.06719
396475.00	3768389.00	0.07361	396525.00	3768389.00	0.08133
397225.00	3768389.00	0.95047	397275.00		

3768389.00 1.20631
397325.00 3768389.00 1.45726 397375.00
3768389.00 1.61615
397425.00 3768389.00 1.62022 397475.00
3768389.00 1.48538
397525.00 3768389.00 1.27153 396425.00
3768439.00 0.06548
396475.00 3768439.00 0.07145 396525.00
3768439.00 0.07860
397175.00 3768439.00 0.58317 397225.00
3768439.00 0.73687
397275.00 3768439.00 0.89830 397325.00
3768439.00 1.05069
397375.00 3768439.00 1.16147 397425.00
3768439.00 1.19024
397475.00 3768439.00 1.12626 397525.00
3768439.00 1.00754
396425.00 3768489.00 0.06347 396475.00
3768489.00 0.06908
396525.00 3768489.00 0.07575 397075.00
3768489.00 0.32404
397125.00 3768489.00 0.38968 397175.00
3768489.00 0.47516
397225.00 3768489.00 0.58101 397275.00
3768489.00 0.69297
397325.00 3768489.00 0.79295 397375.00
3768489.00 0.86894
397425.00 3768489.00 0.89816 397475.00
3768489.00 0.85624
397525.00 3768489.00 0.80923 396425.00
3768539.00 0.06139
396475.00 3768539.00 0.06666 396525.00
3768539.00 0.07278
396575.00 3768539.00 0.07960 397025.00
3768539.00 0.24077
397075.00 3768539.00 0.28271 397125.00
3768539.00 0.33311
397175.00 3768539.00 0.39629 397225.00
3768539.00 0.46872
397275.00 3768539.00 0.54986 397325.00
3768539.00 0.61845
397375.00 3768539.00 0.67107 397425.00
3768539.00 0.69711

*** MODELOPTs: RegDFAULT CONC ELEV URBAN ADJ_U*

*** THE PERIOD (43848 HRS) AVERAGE CONCENTRATION VALUES FOR SOURCE GROUP: EG ***
INCLUDING SOURCE(S): EG ,

*** DISCRETE CARTESIAN RECEPTOR POINTS ***

** CONC OF PM_10 IN MICROGRAMS/M**3 **

X-COORD (M)	Y-COORD (M)	CONC	X-COORD (M)	Y-COORD (M)	CONC
397475.00	3768539.00	0.67533	397525.00	3768539.00	0.63929
396425.00	3768589.00	0.05915	396475.00	3768589.00	0.06416
396525.00	3768589.00	0.06984	396575.00	3768589.00	0.07548
396625.00	3768589.00	0.08249	396825.00	3768589.00	0.12816
396875.00	3768589.00	0.14484	396925.00	3768589.00	0.16380
396975.00	3768589.00	0.18809	397025.00	3768589.00	0.21639
397075.00	3768589.00	0.24841	397125.00	3768589.00	0.28920
397175.00	3768589.00	0.33582	397225.00	3768589.00	0.38700
397275.00	3768589.00	0.44150	397325.00	3768589.00	0.49652
397375.00	3768589.00	0.53588	397425.00	3768589.00	0.54626
397475.00	3768589.00	0.54157	397525.00	3768589.00	0.52240
396425.00	3768639.00	0.05637	396475.00	3768639.00	0.06162
396525.00	3768639.00	0.06613	396575.00	3768639.00	0.07201
396625.00	3768639.00	0.07914	396675.00	3768639.00	0.08723
396725.00	3768639.00	0.09626	396775.00	3768639.00	0.10673
396825.00	3768639.00	0.11904	396875.00	3768639.00	0.13328
396925.00	3768639.00	0.14987	396975.00	3768639.00	0.16995
397025.00	3768639.00	0.19295	397075.00	3768639.00	0.21840
397125.00	3768639.00	0.24577	397175.00		

3768639.00 0.28503
397225.00 3768639.00 0.32451 397275.00
3768639.00 0.36632
397325.00 3768639.00 0.40629 397375.00
3768639.00 0.43643
397425.00 3768639.00 0.45510 397475.00
3768639.00 0.44371
397525.00 3768639.00 0.43467 396425.00
3768689.00 0.05197
396475.00 3768689.00 0.05911 396525.00
3768689.00 0.06383
396575.00 3768689.00 0.06925 396625.00
3768689.00 0.07530
396675.00 3768689.00 0.08230 396725.00
3768689.00 0.09019
396775.00 3768689.00 0.09935 396825.00
3768689.00 0.10996
396875.00 3768689.00 0.12244 396925.00
3768689.00 0.13661
396975.00 3768689.00 0.15302 397025.00
3768689.00 0.17202
397075.00 3768689.00 0.19404 397125.00
3768689.00 0.21500
397175.00 3768689.00 0.24498 397225.00
3768689.00 0.27668
397275.00 3768689.00 0.30786 397325.00
3768689.00 0.33778
397375.00 3768689.00 0.36216 397425.00
3768689.00 0.37787
397475.00 3768689.00 0.38357 397525.00
3768689.00 0.37889

*** MODELOPTs: RegDFAULT CONC ELEV URBAN ADJ_U*

*** THE PERIOD (43848 HRS) AVERAGE CONCENTRATION VALUES FOR SOURCE GROUP: FES ***
INCLUDING SOURCE(S): FES ,

*** DISCRETE CARTESIAN RECEPTOR POINTS ***

** CONC OF PM_10 IN MICROGRAMS/M**3 **

X-COORD (M)	Y-COORD (M)	CONC	X-COORD (M)	Y-COORD (M)	CONC
396166.28	3767377.28	0.03923	396266.28	3767377.28	0.04342
396366.28	3767377.28	0.04966	396466.28	3767377.28	0.05621
396566.28	3767377.28	0.06428	396666.28	3767377.28	0.07147
396766.28	3767377.28	0.07778	396866.28	3767377.28	0.08455
396966.28	3767377.28	0.09281	397066.28	3767377.28	0.09817
397166.28	3767377.28	0.09974	397266.28	3767377.28	0.09827
397366.28	3767377.28	0.09824	397466.28	3767377.28	0.09615
397566.28	3767377.28	0.09108	397666.28	3767377.28	0.08462
397766.28	3767377.28	0.07577	397866.28	3767377.28	0.06807
396166.28	3767477.28	0.04141	396266.28	3767477.28	0.04569
396366.28	3767477.28	0.05313	396466.28	3767477.28	0.06138
396566.28	3767477.28	0.07083	396666.28	3767477.28	0.08087
396766.28	3767477.28	0.09157	396866.28	3767477.28	0.10303
396966.28	3767477.28	0.11663	397066.28	3767477.28	0.12711
397166.28	3767477.28	0.13194	397266.28	3767477.28	0.13145
397366.28	3767477.28	0.12952	397466.28	3767477.28	0.12613
397566.28	3767477.28	0.11777	397666.28	3767477.28	0.10673
397766.28	3767477.28	0.09466	397866.28	3767477.28	0.08292
396166.28	3767577.28	0.04277	396266.28		

3767577.28 0.04810
396366.28 3767577.28 0.05571 396466.28
3767577.28 0.06555
396566.28 3767577.28 0.07780 396666.28
3767577.28 0.09254
396766.28 3767577.28 0.10608 396866.28
3767577.28 0.12689
396966.28 3767577.28 0.14843 397066.28
3767577.28 0.16835
397166.28 3767577.28 0.18228 397266.28
3767577.28 0.18545
397366.28 3767577.28 0.18148 397466.28
3767577.28 0.17471
397566.28 3767577.28 0.15874 397666.28
3767577.28 0.13920
397766.28 3767577.28 0.11907 397866.28
3767577.28 0.10075
396166.28 3767677.28 0.04439 396266.28
3767677.28 0.05035
396366.28 3767677.28 0.05892 396466.28
3767677.28 0.07027
396566.28 3767677.28 0.08424 396666.28
3767677.28 0.09988
396766.28 3767677.28 0.12399 396866.28
3767677.28 0.15758
396966.28 3767677.28 0.19725 397066.28
3767677.28 0.23496
397166.28 3767677.28 0.26688 397266.28
3767677.28 0.28564
397366.28 3767677.28 0.27791 397466.28
3767677.28 0.26024
397566.28 3767677.28 0.22592 397666.28
3767677.28 0.18741
397766.28 3767677.28 0.15207 397866.28
3767677.28 0.12267
396166.28 3767777.28 0.04548 396266.28
3767777.28 0.05271
396366.28 3767777.28 0.06160 396466.28
3767777.28 0.07361
396566.28 3767777.28 0.08842 396666.28
3767777.28 0.10959
396766.28 3767777.28 0.14301 396866.28
3767777.28 0.19074

*** MODELOPTs: RegDFAULT CONC ELEV URBAN ADJ_U*

*** THE PERIOD (43848 HRS) AVERAGE CONCENTRATION VALUES FOR SOURCE GROUP: FES ***
INCLUDING SOURCE(S): FES ,

*** DISCRETE CARTESIAN RECEPTOR POINTS ***

** CONC OF PM_10 IN MICROGRAMS/M**3 **

X-COORD (M)	Y-COORD (M)	CONC	X-COORD (M)	Y-COORD (M)	CONC
396966.28	3767777.28	0.25594	397066.28	3767777.28	0.33818
397166.28	3767777.28	0.42267	397266.28	3767777.28	0.48539
397366.28	3767777.28	0.48308	397466.28	3767777.28	0.41831
397566.28	3767777.28	0.33556	397666.28	3767777.28	0.26056
397766.28	3767777.28	0.19618	397866.28	3767777.28	0.14989
396166.28	3767877.28	0.04617	396266.28	3767877.28	0.05378
396366.28	3767877.28	0.06349	396466.28	3767877.28	0.07593
396566.28	3767877.28	0.09258	397466.28	3767877.28	0.82298
397566.28	3767877.28	0.52969	397666.28	3767877.28	0.32482
397766.28	3767877.28	0.22559	397866.28	3767877.28	0.18002
396166.28	3767977.28	0.04622	396266.28	3767977.28	0.05412
396366.28	3767977.28	0.06414	396466.28	3767977.28	0.07688
397466.28	3767977.28	1.59871	397566.28	3767977.28	0.76424
397666.28	3767977.28	0.42081	397766.28	3767977.28	0.31377
397866.28	3767977.28	0.20766	396166.28	3768077.28	0.04661
396266.28	3768077.28	0.05393	396366.28	3768077.28	0.06395
396466.28	3768077.28	0.07757	397466.28	3768077.28	4.71619
397566.28	3768077.28	1.50478	397666.28	3768077.28	0.67484
397766.28	3768077.28	0.37917	397866.28		

3768077.28 0.24045
396166.28 3768177.28 0.04623 396266.28
3768177.28 0.05367
396366.28 3768177.28 0.06356 396466.28
3768177.28 0.07661
397466.28 3768177.28 7.20338 397566.28
3768177.28 1.95387
397666.28 3768177.28 0.82177 397766.28
3768177.28 0.44947
397866.28 3768177.28 0.27070 396166.28
3768277.28 0.04360
396266.28 3768277.28 0.05243 396366.28
3768277.28 0.06190
396466.28 3768277.28 0.07439 397366.28
3768277.28 4.80797
397466.28 3768277.28 3.65685 397566.28
3768277.28 1.79452
397666.28 3768277.28 0.86684 397766.28
3768277.28 0.48331
397866.28 3768277.28 0.30771 396166.28
3768377.28 0.04053
396266.28 3768377.28 0.05087 396366.28
3768377.28 0.05964
396466.28 3768377.28 0.07121 397266.28
3768377.28 1.22495
397366.28 3768377.28 1.82938 397466.28
3768377.28 1.80826
397566.28 3768377.28 1.27705 397666.28
3768377.28 0.79708
397766.28 3768377.28 0.49590 397866.28
3768377.28 0.33038
396166.28 3768477.28 0.03897 396266.28
3768477.28 0.04841
396366.28 3768477.28 0.05433 396466.28
3768477.28 0.06716
397166.28 3768477.28 0.46907 397266.28
3768477.28 0.70860
397366.28 3768477.28 0.94203 397466.28
3768477.28 0.97681
397566.28 3768477.28 0.83762 397666.28
3768477.28 0.61436
397766.28 3768477.28 0.44153 397866.28
3768477.28 0.31293

*** MODELOPTs: RegDFAULT CONC ELEV URBAN ADJ_U*

*** THE PERIOD (43848 HRS) AVERAGE CONCENTRATION VALUES FOR SOURCE GROUP: FES ***
INCLUDING SOURCE(S): FES ,

*** DISCRETE CARTESIAN RECEPTOR POINTS ***

** CONC OF PM_10 IN MICROGRAMS/M**3 **

X-COORD (M)	Y-COORD (M)	CONC	X-COORD (M)	Y-COORD (M)	CONC
396166.28	3768577.28	0.04073	396266.28	3768577.28	0.04197
396366.28	3768577.28	0.04831	396466.28	3768577.28	0.06267
396566.28	3768577.28	0.07331	396866.28	3768577.28	0.14099
396966.28	3768577.28	0.18361	397066.28	3768577.28	0.24437
397166.28	3768577.28	0.33551	397266.28	3768577.28	0.45343
397366.28	3768577.28	0.56919	397466.28	3768577.28	0.59074
397566.28	3768577.28	0.56603	397666.28	3768577.28	0.46703
397766.28	3768577.28	0.35945	397866.28	3768577.28	0.27491
396166.28	3768677.28	0.03875	396266.28	3768677.28	0.04395
396366.28	3768677.28	0.04601	396466.28	3768677.28	0.05801
396566.28	3768677.28	0.06789	396666.28	3768677.28	0.08066
396766.28	3768677.28	0.09735	396866.28	3768677.28	0.12003
396966.28	3768677.28	0.15076	397066.28	3768677.28	0.19262
397166.28	3768677.28	0.24636	397366.28	3768677.28	0.38007
397466.28	3768677.28	0.41295	397566.28	3768677.28	0.40000
397666.28	3768677.28	0.35318	397766.28	3768677.28	0.29145
397866.28	3768677.28	0.23542	396166.28	3768777.28	0.03689
396266.28	3768777.28	0.04135	396366.28	3768777.28	0.04425
396466.28	3768777.28	0.05356	396566.28		

3768777.28 0.06166
396666.28 3768777.28 0.07207 396766.28
3768777.28 0.08558
396866.28 3768777.28 0.10311 396966.28
3768777.28 0.12550
397066.28 3768777.28 0.15401 397166.28
3768777.28 0.18821
397266.28 3768777.28 0.23052 397366.28
3768777.28 0.26899
397466.28 3768777.28 0.29147 397566.28
3768777.28 0.29063
397666.28 3768777.28 0.26830 397766.28
3768777.28 0.23355
397866.28 3768777.28 0.19775 396166.28
3768877.28 0.03476
396266.28 3768877.28 0.03887 396366.28
3768877.28 0.04348
396466.28 3768877.28 0.04945 396566.28
3768877.28 0.05639
396666.28 3768877.28 0.06481 396766.28
3768877.28 0.07583
396866.28 3768877.28 0.09051 396966.28
3768877.28 0.10723
397066.28 3768877.28 0.12630 397166.28
3768877.28 0.14931
397266.28 3768877.28 0.17616 397366.28
3768877.28 0.19973
397466.28 3768877.28 0.21602 397566.28
3768877.28 0.21938
397666.28 3768877.28 0.20757 397766.28
3768877.28 0.18777
397866.28 3768877.28 0.16552 396425.00
3767739.00 0.06739
396475.00 3767739.00 0.07376 396525.00
3767739.00 0.08049
396575.00 3767739.00 0.08900 396625.00
3767739.00 0.09681
396675.00 3767739.00 0.10780 396725.00
3767739.00 0.12343
396775.00 3767739.00 0.13824 396825.00
3767739.00 0.15881
396875.00 3767739.00 0.18266 396925.00
3767739.00 0.20853

*** MODELOPTs: RegDFAULT CONC ELEV URBAN ADJ_U*

*** THE PERIOD (43848 HRS) AVERAGE CONCENTRATION VALUES FOR SOURCE GROUP: FES ***
INCLUDING SOURCE(S): FES ,

*** DISCRETE CARTESIAN RECEPTOR POINTS ***

** CONC OF PM_10 IN MICROGRAMS/M**3 **

X-COORD (M)	Y-COORD (M)	CONC	X-COORD (M)	Y-COORD (M)	CONC
396975.00	3767739.00	0.23736	397025.00	3767739.00	0.26814
397075.00	3767739.00	0.29881	397125.00	3767739.00	0.32805
397175.00	3767739.00	0.35516	397225.00	3767739.00	0.37621
397275.00	3767739.00	0.39106	397325.00	3767739.00	0.39123
397375.00	3767739.00	0.38095	397425.00	3767739.00	0.36455
397475.00	3767739.00	0.34240	397525.00	3767739.00	0.31403
396425.00	3767789.00	0.06874	396475.00	3767789.00	0.07512
396525.00	3767789.00	0.08217	396575.00	3767789.00	0.09026
396625.00	3767789.00	0.10043	396675.00	3767789.00	0.11325
396725.00	3767789.00	0.13024	396775.00	3767789.00	0.14853
396825.00	3767789.00	0.17192	396875.00	3767789.00	0.19950
396925.00	3767789.00	0.23196	396975.00	3767789.00	0.27044
397025.00	3767789.00	0.31415	397075.00	3767789.00	0.36152
397125.00	3767789.00	0.40963	397175.00	3767789.00	0.45586
397225.00	3767789.00	0.49447	397275.00	3767789.00	0.52446
397325.00	3767789.00	0.53156	397375.00	3767789.00	0.51694
397425.00	3767789.00	0.48729	397475.00	3767789.00	0.43722
397525.00	3767789.00	0.39578	396425.00	3767839.00	0.06988
396475.00	3767839.00	0.07672	396525.00		

3767839.00 0.08353
396575.00 3767839.00 0.09269 396625.00
3767839.00 0.10377
396675.00 3767839.00 0.11960 396725.00
3767839.00 0.13690
396775.00 3767839.00 0.15778 396825.00
3767839.00 0.18376
396875.00 3767839.00 0.21599 396925.00
3767839.00 0.25579
396975.00 3767839.00 0.30498 397025.00
3767839.00 0.36421
397075.00 3767839.00 0.43575 397125.00
3767839.00 0.51285
397175.00 3767839.00 0.59886 397225.00
3767839.00 0.67955
397275.00 3767839.00 0.72734 397325.00
3767839.00 0.72810
397375.00 3767839.00 0.74102 397475.00
3767839.00 0.61157
397525.00 3767839.00 0.50650 396425.00
3767889.00 0.07074
396475.00 3767889.00 0.07690 396525.00
3767889.00 0.08502
396575.00 3767889.00 0.09532 397475.00
3767889.00 0.85384
397525.00 3767889.00 0.63524 396425.00
3767939.00 0.07134
396475.00 3767939.00 0.07773 396525.00
3767939.00 0.08636
397475.00 3767939.00 1.11203 397525.00
3767939.00 0.83545
396425.00 3767989.00 0.07119 396475.00
3767989.00 0.07837
397475.00 3767989.00 1.60901 397525.00
3767989.00 1.09591
396425.00 3768039.00 0.07131 396475.00
3768039.00 0.07881
397475.00 3768039.00 2.78736 397525.00
3768039.00 1.77816
396425.00 3768089.00 0.07132 396475.00
3768089.00 0.07895
397475.00 3768089.00 4.53055 397525.00
3768089.00 2.48298

*** MODELOPTs: RegDFAULT CONC ELEV URBAN ADJ_U*

*** THE PERIOD (43848 HRS) AVERAGE CONCENTRATION VALUES FOR SOURCE GROUP: FES ***
INCLUDING SOURCE(S): FES ,

*** DISCRETE CARTESIAN RECEPTOR POINTS ***

** CONC OF PM_10 IN MICROGRAMS/M**3 **

X-COORD (M)	Y-COORD (M)	CONC	X-COORD (M)	Y-COORD (M)	CONC
396425.00	3768139.00	0.07149	396475.00	3768139.00	0.07851
397425.00	3768139.00	19.85311	397475.00	3768139.00	6.47390
397525.00	3768139.00	2.99654	396425.00	3768189.00	0.07078
396475.00	3768189.00	0.07775	397375.00	3768189.00	21.84592
397425.00	3768189.00	11.82093	397475.00	3768189.00	6.03834
397525.00	3768189.00	3.14697	396425.00	3768239.00	0.06981
396475.00	3768239.00	0.07668	397375.00	3768239.00	8.29652
397425.00	3768239.00	6.10209	397475.00	3768239.00	4.04491
397525.00	3768239.00	2.60762	396425.00	3768289.00	0.06855
396475.00	3768289.00	0.07533	397325.00	3768289.00	3.50079
397375.00	3768289.00	4.25823	397425.00	3768289.00	4.10763
397475.00	3768289.00	3.26471	397525.00	3768289.00	2.32919
396425.00	3768339.00	0.06726	396475.00	3768339.00	0.07374
396525.00	3768339.00	0.08163	397275.00	3768339.00	1.66012
397325.00	3768339.00	2.18072	397375.00	3768339.00	2.56382
397425.00	3768339.00	2.59706	397475.00	3768339.00	2.29423
397525.00	3768339.00	1.84758	396425.00	3768389.00	0.06567
396475.00	3768389.00	0.07189	396525.00	3768389.00	0.07932
397225.00	3768389.00	0.92160	397275.00		

3768389.00 1.19085
397325.00 3768389.00 1.48067 397375.00
3768389.00 1.70201
397425.00 3768389.00 1.75932 397475.00
3768389.00 1.64414
397525.00 3768389.00 1.41888 396425.00
3768439.00 0.06405
396475.00 3768439.00 0.06987 396525.00
3768439.00 0.07679
397175.00 3768439.00 0.56822 397225.00
3768439.00 0.72077
397275.00 3768439.00 0.89180 397325.00
3768439.00 1.06715
397375.00 3768439.00 1.20930 397425.00
3768439.00 1.26878
397475.00 3768439.00 1.22122 397525.00
3768439.00 1.10389
396425.00 3768489.00 0.06218 396475.00
3768489.00 0.06766
396525.00 3768489.00 0.07413 397075.00
3768489.00 0.31550
397125.00 3768489.00 0.38061 397175.00
3768489.00 0.46619
397225.00 3768489.00 0.57349 397275.00
3768489.00 0.69023
397325.00 3768489.00 0.79885 397375.00
3768489.00 0.89502
397425.00 3768489.00 0.92950 397475.00
3768489.00 0.90432
397525.00 3768489.00 0.85529 396425.00
3768539.00 0.06022
396475.00 3768539.00 0.06538 396525.00
3768539.00 0.07133
396575.00 3768539.00 0.07735 397025.00
3768539.00 0.23501
397075.00 3768539.00 0.27648 397125.00
3768539.00 0.32687
397175.00 3768539.00 0.39056 397225.00
3768539.00 0.46488
397275.00 3768539.00 0.54881 397325.00
3768539.00 0.62409
397375.00 3768539.00 0.69025 397425.00
3768539.00 0.70999

*** MODELOPTs: RegDFAULT CONC ELEV URBAN ADJ_U*

*** THE PERIOD (43848 HRS) AVERAGE CONCENTRATION
VALUES FOR SOURCE GROUP: FES ***
INCLUDING SOURCE(S): FES ,

*** DISCRETE CARTESIAN RECEPTOR
POINTS ***

** CONC OF PM_10 IN MICROGRAMS/M**3
**

X-COORD (M)	Y-COORD (M)	CONC	X-COORD (M)	Y-COORD (M)	CONC
397475.00	3768539.00	0.70498	397525.00	3768539.00	0.67352
396425.00	3768589.00	0.05772	396475.00	3768589.00	0.06301
396525.00	3768589.00	0.06814	396575.00	3768589.00	0.07147
396625.00	3768589.00	0.07762	396825.00	3768589.00	0.12527
396875.00	3768589.00	0.14149	396925.00	3768589.00	0.16011
396975.00	3768589.00	0.18386	397025.00	3768589.00	0.21180
397075.00	3768589.00	0.24382	397125.00	3768589.00	0.28472
397175.00	3768589.00	0.33202	397225.00	3768589.00	0.38492
397275.00	3768589.00	0.44262	397325.00	3768589.00	0.50138
397375.00	3768589.00	0.54768	397425.00	3768589.00	0.55893
397475.00	3768589.00	0.56002	397525.00	3768589.00	0.54510
396425.00	3768639.00	0.05310	396475.00	3768639.00	0.06060
396525.00	3768639.00	0.06267	396575.00	3768639.00	0.06838
396625.00	3768639.00	0.07709	396675.00	3768639.00	0.08512
396725.00	3768639.00	0.09433	396775.00	3768639.00	0.10455
396825.00	3768639.00	0.11656	396875.00	3768639.00	0.13051
396925.00	3768639.00	0.14683	396975.00	3768639.00	0.16662
397025.00	3768639.00	0.18950	397075.00	3768639.00	0.21511
397125.00	3768639.00	0.24297	397175.00		

3768639.00 0.28269
397225.00 3768639.00 0.32344 397275.00
3768639.00 0.36740
397325.00 3768639.00 0.41043 397375.00
3768639.00 0.44521
397425.00 3768639.00 0.46856 397475.00
3768639.00 0.45572
397525.00 3768639.00 0.45008 396425.00
3768689.00 0.05005
396475.00 3768689.00 0.05821 396525.00
3768689.00 0.06282
396575.00 3768689.00 0.06811 396625.00
3768689.00 0.07403
396675.00 3768689.00 0.08086 396725.00
3768689.00 0.08860
396775.00 3768689.00 0.09756 396825.00
3768689.00 0.10796
396875.00 3768689.00 0.12020 396925.00
3768689.00 0.13420
396975.00 3768689.00 0.15050 397025.00
3768689.00 0.16949
397075.00 3768689.00 0.19162 397125.00
3768689.00 0.21307
397175.00 3768689.00 0.24353 397225.00
3768689.00 0.27613
397275.00 3768689.00 0.30894 397325.00
3768689.00 0.34118
397375.00 3768689.00 0.36853 397425.00
3768689.00 0.38766
397475.00 3768689.00 0.39651 397525.00
3768689.00 0.39427

*** MODELOPTs: RegDFAULT CONC ELEV URBAN ADJ_U*

*** THE PERIOD (43848 HRS) AVERAGE CONCENTRATION VALUES FOR SOURCE GROUP: IO ***
INCLUDING SOURCE(S): L0001843 , L0001844 ,

*** DISCRETE CARTESIAN RECEPTOR POINTS ***

** CONC OF PM_10 IN MICROGRAMS/M**3 **

X-COORD (M)	Y-COORD (M)	CONC	X-COORD (M)	Y-COORD (M)	CONC
396166.28	3767377.28	0.04357	396266.28	3767377.28	0.04817
396366.28	3767377.28	0.05508	396466.28	3767377.28	0.06183
396566.28	3767377.28	0.06986	396666.28	3767377.28	0.07532
396766.28	3767377.28	0.07883	396866.28	3767377.28	0.08232
396966.28	3767377.28	0.08742	397066.28	3767377.28	0.09031
397166.28	3767377.28	0.08960	397266.28	3767377.28	0.08629
397366.28	3767377.28	0.08502	397466.28	3767377.28	0.08219
397566.28	3767377.28	0.07639	397666.28	3767377.28	0.07008
397766.28	3767377.28	0.06198	397866.28	3767377.28	0.05560
396166.28	3767477.28	0.04676	396266.28	3767477.28	0.05156
396366.28	3767477.28	0.06035	396466.28	3767477.28	0.06970
396566.28	3767477.28	0.07959	396666.28	3767477.28	0.08854
396766.28	3767477.28	0.09653	396866.28	3767477.28	0.10359
396966.28	3767477.28	0.11186	397066.28	3767477.28	0.11720
397166.28	3767477.28	0.11741	397266.28	3767477.28	0.11318
397366.28	3767477.28	0.10869	397466.28	3767477.28	0.10393
397566.28	3767477.28	0.09515	397666.28	3767477.28	0.08496
397766.28	3767477.28	0.07490	397866.28	3767477.28	0.06575

396166.28	3767577.28	0.04884	396266.28	3767577.28	0.05521
396366.28	3767577.28	0.06449	396466.28	3767577.28	0.07646
396566.28	3767577.28	0.09092	396666.28	3767577.28	0.10684
396766.28	3767577.28	0.11764	396866.28	3767577.28	0.13421
396966.28	3767577.28	0.14739	397066.28	3767577.28	0.15657
397166.28	3767577.28	0.16056	397266.28	3767577.28	0.15552
397366.28	3767577.28	0.14610	397466.28	3767577.28	0.13703
397566.28	3767577.28	0.12150	397666.28	3767577.28	0.10543
397766.28	3767577.28	0.09017	397866.28	3767577.28	0.07706
396166.28	3767677.28	0.05141	396266.28	3767677.28	0.05876
396366.28	3767677.28	0.06976	396466.28	3767677.28	0.08461
396566.28	3767677.28	0.10227	396666.28	3767677.28	0.12016
396766.28	3767677.28	0.14688	396866.28	3767677.28	0.18023
396966.28	3767677.28	0.21165	397066.28	3767677.28	0.22786
397166.28	3767677.28	0.23454	397266.28	3767677.28	0.23384
397366.28	3767677.28	0.21067	397466.28	3767677.28	0.19055
397566.28	3767677.28	0.16031	397666.28	3767677.28	0.13248
397766.28	3767677.28	0.10903	397866.28	3767677.28	0.08980
396166.28	3767777.28	0.05327	396266.28	3767777.28	0.06281
396366.28	3767777.28	0.07450	396466.28	3767777.28	0.09076
396566.28	3767777.28	0.11045	396666.28	3767777.28	0.13884
396766.28	3767777.28	0.18338	396866.28	3767777.28	0.24294

*** MODELOPTs: RegDFAULT CONC ELEV URBAN ADJ_U*

*** THE PERIOD (43848 HRS) AVERAGE CONCENTRATION VALUES FOR SOURCE GROUP: IO ***
INCLUDING SOURCE(S): L0001843 , L0001844 ,

*** DISCRETE CARTESIAN RECEPTOR POINTS ***

** CONC OF PM_10 IN MICROGRAMS/M**3 **

X-COORD (M)	Y-COORD (M)	CONC	X-COORD (M)	Y-COORD (M)	CONC
396966.28	3767777.28	0.30963	397066.28	3767777.28	0.36163
397166.28	3767777.28	0.38282	397266.28	3767777.28	0.38068
397366.28	3767777.28	0.33241	397466.28	3767777.28	0.27837
397566.28	3767777.28	0.21813	397666.28	3767777.28	0.16826
397766.28	3767777.28	0.13216	397866.28	3767777.28	0.10527
396166.28	3767877.28	0.05457	396266.28	3767877.28	0.06488
396366.28	3767877.28	0.07826	396466.28	3767877.28	0.09555
396566.28	3767877.28	0.11929	397466.28	3767877.28	0.42306
397566.28	3767877.28	0.30187	397666.28	3767877.28	0.21542
397766.28	3767877.28	0.15909	397866.28	3767877.28	0.12059
396166.28	3767977.28	0.05485	396266.28	3767977.28	0.06577
396366.28	3767977.28	0.07992	396466.28	3767977.28	0.09816
397466.28	3767977.28	0.69819	397566.28	3767977.28	0.40987
397666.28	3767977.28	0.26508	397766.28	3767977.28	0.18425
397866.28	3767977.28	0.13255	396166.28	3768077.28	0.05593
396266.28	3768077.28	0.06583	396366.28	3768077.28	0.08017
396466.28	3768077.28	0.10054	397466.28	3768077.28	1.08592
397566.28	3768077.28	0.53268	397666.28	3768077.28	0.31674

397766.28 3768077.28 0.21126 397866.28 3768077.28 0.14844
396166.28 3768177.28 0.05577 396266.28 3768177.28 0.06604
396366.28 3768177.28 0.08043 396466.28 3768177.28 0.09994
397466.28 3768177.28 1.45075 397566.28 3768177.28 0.64712
397666.28 3768177.28 0.36181 397766.28 3768177.28 0.23677
397866.28 3768177.28 0.16084 396166.28 3768277.28 0.05494
396266.28 3768277.28 0.06441 396366.28 3768277.28 0.07823
396466.28 3768277.28 0.09706 397366.28 3768277.28 3.76130
397466.28 3768277.28 1.52093 397566.28 3768277.28 0.74913
397666.28 3768277.28 0.41077 397766.28 3768277.28 0.25793
397866.28 3768277.28 0.18077 396166.28 3768377.28 0.05316
396266.28 3768377.28 0.06244 396366.28 3768377.28 0.07511
396466.28 3768377.28 0.09252 397266.28 3768377.28 2.40125
397366.28 3768377.28 2.01743 397466.28 3768377.28 1.24828
397566.28 3768377.28 0.74412 397666.28 3768377.28 0.45307
397766.28 3768377.28 0.29022 397866.28 3768377.28 0.20465
396166.28 3768477.28 0.05104 396266.28 3768477.28 0.05996
396366.28 3768477.28 0.07154 396466.28 3768477.28 0.08634
397166.28 3768477.28 0.84263 397266.28 3768477.28 1.16887
397366.28 3768477.28 1.15688 397466.28 3768477.28 0.89892
397566.28 3768477.28 0.61032 397666.28 3768477.28 0.41404
397766.28 3768477.28 0.29790 397866.28 3768477.28 0.21015

*** MODELOPTs: RegDFAULT CONC ELEV URBAN ADJ_U*

*** THE PERIOD (43848 HRS) AVERAGE CONCENTRATION VALUES FOR SOURCE GROUP: IO ***
INCLUDING SOURCE(S): L0001843 , L0001844 ,

*** DISCRETE CARTESIAN RECEPTOR POINTS ***

** CONC OF PM_10 IN MICROGRAMS/M**3 **

X-COORD (M)	Y-COORD (M)	CONC	X-COORD (M)	Y-COORD (M)	CONC
396166.28	3768577.28	0.04828	396266.28	3768577.28	0.05552
396366.28	3768577.28	0.06629	396466.28	3768577.28	0.07952
396566.28	3768577.28	0.09775	396866.28	3768577.28	0.20854
396966.28	3768577.28	0.28319	397066.28	3768577.28	0.38613
397166.28	3768577.28	0.53057	397266.28	3768577.28	0.65908
397366.28	3768577.28	0.70353	397466.28	3768577.28	0.61733
397566.28	3768577.28	0.48428	397666.28	3768577.28	0.36150
397766.28	3768577.28	0.26581	397866.28	3768577.28	0.20087
396166.28	3768677.28	0.04550	396266.28	3768677.28	0.05258
396366.28	3768677.28	0.06144	396466.28	3768677.28	0.07236
396566.28	3768677.28	0.08710	396666.28	3768677.28	0.10637
396766.28	3768677.28	0.13212	396866.28	3768677.28	0.16811
396966.28	3768677.28	0.21633	397066.28	3768677.28	0.28030
397166.28	3768677.28	0.35431	397366.28	3768677.28	0.46189
397466.28	3768677.28	0.43422	397566.28	3768677.28	0.37050
397666.28	3768677.28	0.29920	397766.28	3768677.28	0.23379
397866.28	3768677.28	0.18491	396166.28	3768777.28	0.04304
396266.28	3768777.28	0.04888	396366.28	3768777.28	0.05680

396466.28 3768777.28 0.06589 396566.28
3768777.28 0.07708
396666.28 3768777.28 0.09218 396766.28
3768777.28 0.11220
396866.28 3768777.28 0.13802 396966.28
3768777.28 0.17025
397066.28 3768777.28 0.21022 397166.28
3768777.28 0.25381
397266.28 3768777.28 0.29865 397366.28
3768777.28 0.32002
397466.28 3768777.28 0.31008 397566.28
3768777.28 0.27832
397666.28 3768777.28 0.23790 397766.28
3768777.28 0.19771
397866.28 3768777.28 0.16361 396166.28
3768877.28 0.04008
396266.28 3768877.28 0.04553 396366.28
3768877.28 0.05155
396466.28 3768877.28 0.06001 396566.28
3768877.28 0.06941
396666.28 3768877.28 0.08100 396766.28
3768877.28 0.09649
396866.28 3768877.28 0.11750 396966.28
3768877.28 0.14000
397066.28 3768877.28 0.16460 397166.28
3768877.28 0.19248
397266.28 3768877.28 0.21994 397366.28
3768877.28 0.23385
397466.28 3768877.28 0.23288 397566.28
3768877.28 0.21730
397666.28 3768877.28 0.19153 397766.28
3768877.28 0.16542
397866.28 3768877.28 0.14224 396425.00
3767739.00 0.08191
396475.00 3767739.00 0.09042 396525.00
3767739.00 0.09903
396575.00 3767739.00 0.11035 396625.00
3767739.00 0.11990
396675.00 3767739.00 0.13389 396725.00
3767739.00 0.15416
396775.00 3767739.00 0.17131 396825.00
3767739.00 0.19555
396875.00 3767739.00 0.22228 396925.00
3767739.00 0.24691

*** MODELOPTs: RegDFAULT CONC ELEV URBAN ADJ_U*

*** THE PERIOD (43848 HRS) AVERAGE CONCENTRATION VALUES FOR SOURCE GROUP: IO ***
INCLUDING SOURCE(S): L0001843 , L0001844 ,

*** DISCRETE CARTESIAN RECEPTOR POINTS ***

** CONC OF PM_10 IN MICROGRAMS/M**3 **

X-COORD (M)	Y-COORD (M)	CONC	X-COORD (M)	Y-COORD (M)	CONC
396975.00	3767739.00	0.27007	397025.00	3767739.00	0.28895
397075.00	3767739.00	0.30121	397125.00	3767739.00	0.30829
397175.00	3767739.00	0.31236	397225.00	3767739.00	0.31120
397275.00	3767739.00	0.30887	397325.00	3767739.00	0.29233
397375.00	3767739.00	0.27157	397425.00	3767739.00	0.25089
397475.00	3767739.00	0.23490	397525.00	3767739.00	0.21170
396425.00	3767789.00	0.08445	396475.00	3767789.00	0.09299
396525.00	3767789.00	0.10238	396575.00	3767789.00	0.11323
396625.00	3767789.00	0.12710	396675.00	3767789.00	0.14461
396725.00	3767789.00	0.16829	396775.00	3767789.00	0.19231
396825.00	3767789.00	0.22295	396875.00	3767789.00	0.25681
396925.00	3767789.00	0.29238	396975.00	3767789.00	0.33046
397025.00	3767789.00	0.36357	397075.00	3767789.00	0.38767
397125.00	3767789.00	0.40236	397175.00	3767789.00	0.40936
397225.00	3767789.00	0.40689	397275.00	3767789.00	0.40317
397325.00	3767789.00	0.38090	397375.00	3767789.00	0.34650
397425.00	3767789.00	0.31188	397475.00	3767789.00	0.28612
397525.00	3767789.00	0.25197	396425.00	3767839.00	0.08672

396475.00	3767839.00	0.09624	396525.00	3767839.00	0.10532
396575.00	3767839.00	0.11825	396625.00	3767839.00	0.13408
396675.00	3767839.00	0.15784	396725.00	3767839.00	0.18338
396775.00	3767839.00	0.21376	396825.00	3767839.00	0.25111
396875.00	3767839.00	0.29581	396925.00	3767839.00	0.34681
396975.00	3767839.00	0.40592	397025.00	3767839.00	0.46477
397075.00	3767839.00	0.50782	397125.00	3767839.00	0.53681
397175.00	3767839.00	0.56259	397225.00	3767839.00	0.57314
397275.00	3767839.00	0.55668	397325.00	3767839.00	0.51780
397375.00	3767839.00	0.45850	397475.00	3767839.00	0.34569
397525.00	3767839.00	0.30277	396425.00	3767889.00	0.08856
396475.00	3767889.00	0.09690	396525.00	3767889.00	0.10857
396575.00	3767889.00	0.12381	397475.00	3767889.00	0.43934
397525.00	3767889.00	0.36598	396425.00	3767939.00	0.09001
396475.00	3767939.00	0.09886	396525.00	3767939.00	0.11166
397475.00	3767939.00	0.55782	397525.00	3767939.00	0.44226
396425.00	3767989.00	0.09001	396475.00	3767989.00	0.10053
397475.00	3767989.00	0.69583	397525.00	3767989.00	0.52499
396425.00	3768039.00	0.09066	396475.00	3768039.00	0.10191
397475.00	3768039.00	0.87233	397525.00	3768039.00	0.62299
396425.00	3768089.00	0.09114	396475.00	3768089.00	0.10280
397475.00	3768089.00	1.05696	397525.00	3768089.00	0.71300

*** MODELOPTs: RegDFAULT CONC ELEV URBAN ADJ_U*

*** THE PERIOD (43848 HRS) AVERAGE CONCENTRATION VALUES FOR SOURCE GROUP: IO ***
INCLUDING SOURCE(S): L0001843 , L0001844 ,

*** DISCRETE CARTESIAN RECEPTOR POINTS ***

** CONC OF PM_10 IN MICROGRAMS/M**3 **

X-COORD (M)	Y-COORD (M)	CONC	X-COORD (M)	Y-COORD (M)	CONC
396425.00	3768139.00	0.09227	396475.00	3768139.00	0.10258
397425.00	3768139.00	2.03419	397475.00	3768139.00	1.21845
397525.00	3768139.00	0.80507	396425.00	3768189.00	0.09144
396475.00	3768189.00	0.10179	397375.00	3768189.00	4.42056
397425.00	3768189.00	2.20185	397475.00	3768189.00	1.36926
397525.00	3768189.00	0.90057	396425.00	3768239.00	0.09016
396475.00	3768239.00	0.10043	397375.00	3768239.00	4.12150
397425.00	3768239.00	2.14715	397475.00	3768239.00	1.34398
397525.00	3768239.00	0.91452	396425.00	3768289.00	0.08826
396475.00	3768289.00	0.09855	397325.00	3768289.00	4.69798
397375.00	3768289.00	3.24985	397425.00	3768289.00	2.17495
397475.00	3768289.00	1.45058	397525.00	3768289.00	0.99193
396425.00	3768339.00	0.08654	396475.00	3768339.00	0.09627
396525.00	3768339.00	0.10887	397275.00	3768339.00	3.38146
397325.00	3768339.00	3.08618	397375.00	3768339.00	2.43669
397425.00	3768339.00	1.82810	397475.00	3768339.00	1.33744
397525.00	3768339.00	0.98319	396425.00	3768389.00	0.08415
396475.00	3768389.00	0.09350	396525.00	3768389.00	0.10523

397225.00 3768389.00 2.00353 397275.00
3768389.00 2.19198
397325.00 3768389.00 2.11543 397375.00
3768389.00 1.81903
397425.00 3768389.00 1.46713 397475.00
3768389.00 1.14945
397525.00 3768389.00 0.88891 396425.00
3768439.00 0.08204
396475.00 3768439.00 0.09046 396525.00
3768439.00 0.10120
397175.00 3768439.00 1.10191 397225.00
3768439.00 1.38479
397275.00 3768439.00 1.51096 397325.00
3768439.00 1.52326
397375.00 3768439.00 1.40309 397425.00
3768439.00 1.21082
397475.00 3768439.00 0.97856 397525.00
3768439.00 0.78926
396425.00 3768489.00 0.07911 396475.00
3768489.00 0.08702
396525.00 3768489.00 0.09701 397075.00
3768489.00 0.54958
397125.00 3768489.00 0.67145 397175.00
3768489.00 0.82013
397225.00 3768489.00 0.98013 397275.00
3768489.00 1.09953
397325.00 3768489.00 1.12952 397375.00
3768489.00 1.07271
397425.00 3768489.00 0.96572 397475.00
3768489.00 0.83744
397525.00 3768489.00 0.70697 396425.00
3768539.00 0.07609
396475.00 3768539.00 0.08357 396525.00
3768539.00 0.09258
396575.00 3768539.00 0.10393 397025.00
3768539.00 0.38004
397075.00 3768539.00 0.45445 397125.00
3768539.00 0.54017
397175.00 3768539.00 0.64120 397225.00
3768539.00 0.73789
397275.00 3768539.00 0.83267 397325.00
3768539.00 0.86090
397375.00 3768539.00 0.83645 397425.00
3768539.00 0.77718

```
 *** AERMOD - VERSION 22112  ***   *** C:\Lakes\Project Files\Garvey\Garvey.isc
***        03/04/24
 *** AERMET - VERSION  16216 ***   ***
***        13:00:54

PAGE 470
 *** MODELOPTs:    RegDFAULT  CONC  ELEV  URBAN  ADJ_U*

                              *** THE PERIOD ( 43848 HRS) AVERAGE CONCENTRATION
VALUES FOR SOURCE GROUP: IO       ***
                                  INCLUDING SOURCE(S):     L0001843    ,
L0001844    ,

                                          *** DISCRETE CARTESIAN RECEPTOR
POINTS ***

                                     ** CONC OF PM_10    IN MICROGRAMS/M**3
**

       X-COORD (M)   Y-COORD (M)        CONC                       X-COORD (M)
Y-COORD (M)        CONC
 - - - - - - - - - - - - - - - - - - - - - - - - - - - - - - - - - - - - - - - - - -
- - - - - - - - - - - - - - - - - - - - - - - - -
         397475.00    3768539.00        0.69628                     397525.00
3768539.00        0.60771
         396425.00    3768589.00        0.07318                     396475.00
3768589.00        0.07998
         396525.00    3768589.00        0.08849                     396575.00
3768589.00        0.09829
         396625.00    3768589.00        0.10973                     396825.00
3768589.00        0.18091
         396875.00    3768589.00        0.20899                     396925.00
3768589.00        0.24023
         396975.00    3768589.00        0.28208                     397025.00
3768589.00        0.32991
         397075.00    3768589.00        0.38174                     397125.00
3768589.00        0.44801
         397175.00    3768589.00        0.51706                     397225.00
3768589.00        0.57962
         397275.00    3768589.00        0.62925                     397325.00
3768589.00        0.67231
         397375.00    3768589.00        0.66410                     397425.00
3768589.00        0.63306
         397475.00    3768589.00        0.58159                     397525.00
3768589.00        0.52083
         396425.00    3768639.00        0.07018                     396475.00
3768639.00        0.07625
         396525.00    3768639.00        0.08412                     396575.00
3768639.00        0.09280
         396625.00    3768639.00        0.10290                     396675.00
3768639.00        0.11478
         396725.00    3768639.00        0.12880                     396775.00
3768639.00        0.14515
         396825.00    3768639.00        0.16484                     396875.00
3768639.00        0.18756
         396925.00    3768639.00        0.21406                     396975.00
3768639.00        0.24660
         397025.00    3768639.00        0.28317                     397075.00
3768639.00        0.32201
```

397125.00 3768639.00 0.36113 397175.00 3768639.00 0.41861
397225.00 3768639.00 0.46660 397275.00 3768639.00 0.50752
397325.00 3768639.00 0.53563 397375.00 3768639.00 0.53564
397425.00 3768639.00 0.52001 397475.00 3768639.00 0.48939
397525.00 3768639.00 0.44763 396425.00 3768689.00 0.06696
396475.00 3768689.00 0.07258 396525.00 3768689.00 0.07926
396575.00 3768689.00 0.08724 396625.00 3768689.00 0.09603
396675.00 3768689.00 0.10650 396725.00 3768689.00 0.11828
396775.00 3768689.00 0.13223 396825.00 3768689.00 0.14854
396875.00 3768689.00 0.16789 396925.00 3768689.00 0.18966
396975.00 3768689.00 0.21473 397025.00 3768689.00 0.24361
397075.00 3768689.00 0.27670 397125.00 3768689.00 0.30484
397175.00 3768689.00 0.34636 397225.00 3768689.00 0.38522
397275.00 3768689.00 0.41508 397325.00 3768689.00 0.43585
397375.00 3768689.00 0.44259 397425.00 3768689.00 0.43388
397475.00 3768689.00 0.41396 397525.00 3768689.00 0.38602

*** MODELOPTs: RegDFAULT CONC ELEV URBAN ADJ_U*

*** THE PERIOD (43848 HRS) AVERAGE CONCENTRATION
VALUES FOR SOURCE GROUP: JS ***
INCLUDING SOURCE(S): JS ,

*** DISCRETE CARTESIAN RECEPTOR
POINTS ***

** CONC OF PM_10 IN MICROGRAMS/M**3
**

X-COORD (M)	Y-COORD (M)	CONC	X-COORD (M)	Y-COORD (M)	CONC
396166.28	3767377.28	0.03777	396266.28	3767377.28	0.04172
396366.28	3767377.28	0.04763	396466.28	3767377.28	0.05384
396566.28	3767377.28	0.06156	396666.28	3767377.28	0.06856
396766.28	3767377.28	0.07494	396866.28	3767377.28	0.08198
396966.28	3767377.28	0.09063	397066.28	3767377.28	0.09660
397166.28	3767377.28	0.09879	397266.28	3767377.28	0.09784
397366.28	3767377.28	0.09831	397466.28	3767377.28	0.09686
397566.28	3767377.28	0.09242	397666.28	3767377.28	0.08645
397766.28	3767377.28	0.07778	397866.28	3767377.28	0.07015
396166.28	3767477.28	0.03977	396266.28	3767477.28	0.04376
396366.28	3767477.28	0.05073	396466.28	3767477.28	0.05845
396566.28	3767477.28	0.06732	396666.28	3767477.28	0.07685
396766.28	3767477.28	0.08723	396866.28	3767477.28	0.09869
396966.28	3767477.28	0.11260	397066.28	3767477.28	0.12395
397166.28	3767477.28	0.12997	397266.28	3767477.28	0.13059
397366.28	3767477.28	0.12965	397466.28	3767477.28	0.12744
397566.28	3767477.28	0.12019	397666.28	3767477.28	0.10987
397766.28	3767477.28	0.09808	397866.28	3767477.28	0.08625
396166.28	3767577.28	0.04099	396266.28		

3767577.28 0.04593
396366.28 3767577.28 0.05299 396466.28
3767577.28 0.06209
396566.28 3767577.28 0.07340 396666.28
3767577.28 0.08704
396766.28 3767577.28 0.09977 396866.28
3767577.28 0.11966
396966.28 3767577.28 0.14101 397066.28
3767577.28 0.16186
397166.28 3767577.28 0.17780 397266.28
3767577.28 0.18343
397366.28 3767577.28 0.18173 397466.28
3767577.28 0.17741
397566.28 3767577.28 0.16348 397666.28
3767577.28 0.14500
397766.28 3767577.28 0.12490 397866.28
3767577.28 0.10602
396166.28 3767677.28 0.04245 396266.28
3767677.28 0.04795
396366.28 3767677.28 0.05585 396466.28
3767677.28 0.06624
396566.28 3767677.28 0.07895 396666.28
3767677.28 0.09311
396766.28 3767677.28 0.11501 396866.28
3767677.28 0.14580
396966.28 3767677.28 0.18310 397066.28
3767677.28 0.22070
397166.28 3767677.28 0.25561 397266.28
3767677.28 0.27991
397366.28 3767677.28 0.27835 397466.28
3767677.28 0.26668
397566.28 3767677.28 0.23632 397666.28
3767677.28 0.19877
397766.28 3767677.28 0.16229 397866.28
3767677.28 0.13094
396166.28 3767777.28 0.04343 396266.28
3767777.28 0.05009
396366.28 3767777.28 0.05822 396466.28
3767777.28 0.06911
396566.28 3767777.28 0.08242 396666.28
3767777.28 0.10129
396766.28 3767777.28 0.13088 396866.28
3767777.28 0.17297

*** MODELOPTs: RegDFAULT CONC ELEV URBAN ADJ_U*

*** THE PERIOD (43848 HRS) AVERAGE CONCENTRATION VALUES FOR SOURCE GROUP: JS ***
INCLUDING SOURCE(S): JS ,

*** DISCRETE CARTESIAN RECEPTOR POINTS ***

** CONC OF PM_10 IN MICROGRAMS/M**3 **

X-COORD (M)	Y-COORD (M)	CONC	X-COORD (M)	Y-COORD (M)	CONC
396966.28	3767777.28	0.23097	397066.28	3767777.28	0.30662
397166.28	3767777.28	0.39119	397266.28	3767777.28	0.46562
397366.28	3767777.28	0.48342	397466.28	3767777.28	0.43871
397566.28	3767777.28	0.36234	397666.28	3767777.28	0.28423
397766.28	3767777.28	0.21431	397866.28	3767777.28	0.16290
396166.28	3767877.28	0.04404	396266.28	3767877.28	0.05103
396366.28	3767877.28	0.05988	396466.28	3767877.28	0.07109
396566.28	3767877.28	0.08592	397466.28	3767877.28	0.89350
397566.28	3767877.28	0.60069	397666.28	3767877.28	0.37071
397766.28	3767877.28	0.25474	397866.28	3767877.28	0.19948
396166.28	3767977.28	0.04406	396266.28	3767977.28	0.05132
396366.28	3767977.28	0.06043	396466.28	3767977.28	0.07186
397466.28	3767977.28	1.95601	397566.28	3767977.28	0.95278
397666.28	3767977.28	0.50643	397766.28	3767977.28	0.36359
397866.28	3767977.28	0.23377	396166.28	3768077.28	0.04444
396266.28	3768077.28	0.05114	396366.28	3768077.28	0.06024
396466.28	3768077.28	0.07247	397466.28	3768077.28	8.58777
397566.28	3768077.28	2.11408	397666.28	3768077.28	0.84876
397766.28	3768077.28	0.44996	397866.28		

3768077.28 0.27469
396166.28 3768177.28 0.04410 396266.28
3768177.28 0.05092
396366.28 3768177.28 0.05992 396466.28
3768177.28 0.07164
397466.28 3768177.28 12.62007 397566.28
3768177.28 2.77648
397666.28 3768177.28 1.04572 397766.28
3768177.28 0.54041
397866.28 3768177.28 0.31170 396166.28
3768277.28 0.04287
396266.28 3768277.28 0.04981 396366.28
3768277.28 0.05845
396466.28 3768277.28 0.06973 397366.28
3768277.28 4.27655
397466.28 3768277.28 4.39289 397566.28
3768277.28 2.30240
397666.28 3768277.28 1.06855 397766.28
3768277.28 0.57358
397866.28 3768277.28 0.35545 396166.28
3768377.28 0.03896
396266.28 3768377.28 0.04843 396366.28
3768377.28 0.05646
396466.28 3768377.28 0.06698 397266.28
3768377.28 1.03430
397366.28 3768377.28 1.68551 397466.28
3768377.28 1.93056
397566.28 3768377.28 1.48408 397666.28
3768377.28 0.93887
397766.28 3768377.28 0.57599 397866.28
3768377.28 0.37830
396166.28 3768477.28 0.03752 396266.28
3768477.28 0.04627
396366.28 3768477.28 0.05183 396466.28
3768477.28 0.06343
397166.28 3768477.28 0.41288 397266.28
3768477.28 0.63070
397366.28 3768477.28 0.88184 397466.28
3768477.28 0.99976
397566.28 3768477.28 0.91278 397666.28
3768477.28 0.68782
397766.28 3768477.28 0.49790 397866.28
3768477.28 0.35041

*** MODELOPTs: RegDFAULT CONC ELEV URBAN ADJ_U*

*** THE PERIOD (43848 HRS) AVERAGE CONCENTRATION
VALUES FOR SOURCE GROUP: JS ***
INCLUDING SOURCE(S): JS ,

*** DISCRETE CARTESIAN RECEPTOR
POINTS ***

** CONC OF PM_10 IN MICROGRAMS/M**3
**

X-COORD (M)	Y-COORD (M)	CONC	X-COORD (M)	Y-COORD (M)	CONC
396166.28	3768577.28	0.03911	396266.28	3768577.28	0.04036
396366.28	3768577.28	0.04629	396466.28	3768577.28	0.05947
396566.28	3768577.28	0.06933	396866.28	3768577.28	0.13004
396966.28	3768577.28	0.16767	397066.28	3768577.28	0.22160
397166.28	3768577.28	0.30401	397266.28	3768577.28	0.41547
397366.28	3768577.28	0.54068	397466.28	3768577.28	0.59244
397566.28	3768577.28	0.59615	397666.28	3768577.28	0.50616
397766.28	3768577.28	0.39326	397866.28	3768577.28	0.30105
396166.28	3768677.28	0.03730	396266.28	3768677.28	0.04219
396366.28	3768677.28	0.04426	396466.28	3768677.28	0.05528
396566.28	3768677.28	0.06442	396666.28	3768677.28	0.07612
396766.28	3768677.28	0.09126	396866.28	3768677.28	0.11172
396966.28	3768677.28	0.13949	397066.28	3768677.28	0.17778
397166.28	3768677.28	0.22783	397366.28	3768677.28	0.36368
397466.28	3768677.28	0.41001	397566.28	3768677.28	0.41221
397666.28	3768677.28	0.37380	397766.28	3768677.28	0.31242
397866.28	3768677.28	0.25343	396166.28	3768777.28	0.03560
396266.28	3768777.28	0.03980	396366.28	3768777.28	0.04265
396466.28	3768777.28	0.05125	396566.28		

3768777.28 0.05875
396666.28 3768777.28 0.06833 396766.28
3768777.28 0.08071
396866.28 3768777.28 0.09677 396966.28
3768777.28 0.11746
397066.28 3768777.28 0.14413 397166.28
3768777.28 0.17657
397266.28 3768777.28 0.21797 397366.28
3768777.28 0.25876
397466.28 3768777.28 0.28765 397566.28
3768777.28 0.29497
397666.28 3768777.28 0.27877 397766.28
3768777.28 0.24625
397866.28 3768777.28 0.20992 396166.28
3768877.28 0.03361
396266.28 3768877.28 0.03752 396366.28
3768877.28 0.04185
396466.28 3768877.28 0.04747 396566.28
3768877.28 0.05392
396666.28 3768877.28 0.06172 396766.28
3768877.28 0.07192
396866.28 3768877.28 0.08563 396966.28
3768877.28 0.10136
397066.28 3768877.28 0.11946 397166.28
3768877.28 0.14156
397266.28 3768877.28 0.16808 397366.28
3768877.28 0.19299
397466.28 3768877.28 0.21267 397566.28
3768877.28 0.22066
397666.28 3768877.28 0.21292 397766.28
3768877.28 0.19541
397866.28 3768877.28 0.17373 396425.00
3767739.00 0.06354
396475.00 3767739.00 0.06931 396525.00
3767739.00 0.07538
396575.00 3767739.00 0.08306 396625.00
3767739.00 0.09004
396675.00 3767739.00 0.09989 396725.00
3767739.00 0.11386
396775.00 3767739.00 0.12708 396825.00
3767739.00 0.14546
396875.00 3767739.00 0.16685 396925.00
3767739.00 0.19025

*** MODELOPTs: RegDFAULT CONC ELEV URBAN ADJ_U*

*** THE PERIOD (43848 HRS) AVERAGE CONCENTRATION VALUES FOR SOURCE GROUP: JS ***
INCLUDING SOURCE(S): JS ,

*** DISCRETE CARTESIAN RECEPTOR POINTS ***

** CONC OF PM_10 IN MICROGRAMS/M**3 **

X-COORD (M)	Y-COORD (M)	CONC	X-COORD (M)	Y-COORD (M)	CONC
396975.00	3767739.00	0.21670	397025.00	3767739.00	0.24558
397075.00	3767739.00	0.27543	397125.00	3767739.00	0.30532
397175.00	3767739.00	0.33470	397225.00	3767739.00	0.35984
397275.00	3767739.00	0.38014	397325.00	3767739.00	0.38660
397375.00	3767739.00	0.38248	397425.00	3767739.00	0.37181
397475.00	3767739.00	0.35708	397525.00	3767739.00	0.33185
396425.00	3767789.00	0.06470	396475.00	3767789.00	0.07046
396525.00	3767789.00	0.07680	396575.00	3767789.00	0.08403
396625.00	3767789.00	0.09310	396675.00	3767789.00	0.10449
396725.00	3767789.00	0.11952	396775.00	3767789.00	0.13562
396825.00	3767789.00	0.15616	396875.00	3767789.00	0.18038
396925.00	3767789.00	0.20896	396975.00	3767789.00	0.24315
397025.00	3767789.00	0.28257	397075.00	3767789.00	0.32646
397125.00	3767789.00	0.37306	397175.00	3767789.00	0.42068
397225.00	3767789.00	0.46442	397275.00	3767789.00	0.50306
397325.00	3767789.00	0.52180	397375.00	3767789.00	0.51919
397425.00	3767789.00	0.50035	397475.00	3767789.00	0.46113
397525.00	3767789.00	0.42532	396425.00	3767839.00	0.06569
396475.00	3767839.00	0.07185	396525.00		

3767839.00 0.07793
396575.00 3767839.00 0.08608 396625.00
3767839.00 0.09591
396675.00 3767839.00 0.10989 396725.00
3767839.00 0.12503
396775.00 3767839.00 0.14318 396825.00
3767839.00 0.16565
396875.00 3767839.00 0.19339 396925.00
3767839.00 0.22754
396975.00 3767839.00 0.26989 397025.00
3767839.00 0.32127
397075.00 3767839.00 0.38416 397125.00
3767839.00 0.45455
397175.00 3767839.00 0.53686 397225.00
3767839.00 0.62107
397275.00 3767839.00 0.68822 397325.00
3767839.00 0.71591
397375.00 3767839.00 0.74445 397475.00
3767839.00 0.65342
397525.00 3767839.00 0.55506 396425.00
3767889.00 0.06642
396475.00 3767889.00 0.07194 396525.00
3767889.00 0.07919
396575.00 3767889.00 0.08834 397475.00
3767889.00 0.94998
397525.00 3767889.00 0.72107 396425.00
3767939.00 0.06694
396475.00 3767939.00 0.07264 396525.00
3767939.00 0.08034
397475.00 3767939.00 1.29049 397525.00
3767939.00 0.99347
396425.00 3767989.00 0.06676 396475.00
3767989.00 0.07319
397475.00 3767989.00 2.02695 397525.00
3767989.00 1.40033
396425.00 3768039.00 0.06687 396475.00
3768039.00 0.07357
397475.00 3768039.00 4.16035 397525.00
3768039.00 2.53080
396425.00 3768089.00 0.06688 396475.00
3768089.00 0.07370
397475.00 3768089.00 8.33077 397525.00
3768089.00 3.84648

```
 *** AERMOD - VERSION 22112  ***   *** C:\Lakes\Project Files\Garvey\Garvey.isc
***        03/04/24
 *** AERMET - VERSION  16216 ***   ***
***        13:00:54

PAGE 475
 *** MODELOPTs:    RegDFAULT  CONC  ELEV  URBAN  ADJ_U*

                              *** THE PERIOD ( 43848 HRS) AVERAGE CONCENTRATION
VALUES FOR SOURCE GROUP: JS       ***
                                  INCLUDING SOURCE(S):     JS          ,

                                            *** DISCRETE CARTESIAN RECEPTOR
POINTS ***

                                       ** CONC OF PM_10    IN MICROGRAMS/M**3
**

       X-COORD (M)   Y-COORD (M)        CONC                       X-COORD (M)
Y-COORD (M)        CONC
 - - - - - - - - - - - - - - - - - - - - - - - - - - - - - - - - - - - - - - - - - -
- - - - - - - - - - - - - - - - - - - - - - - - -
         396425.00    3768139.00        0.06706                     396475.00
3768139.00        0.07333
         397425.00    3768139.00       63.43558                     397475.00
3768139.00       12.75652
         397525.00    3768139.00        4.76643                     396425.00
3768189.00        0.06644
         396475.00    3768189.00        0.07268                     397375.00
3768189.00       19.92716
         397425.00    3768189.00       17.92381                     397475.00
3768189.00        9.87768
         397525.00    3768189.00        4.75415                     396425.00
3768239.00        0.06560
         396475.00    3768239.00        0.07175                     397375.00
3768239.00        7.55481
         397425.00    3768239.00        7.12473                     397475.00
3768239.00        5.36237
         397525.00    3768239.00        3.51569                     396425.00
3768289.00        0.06448
         396475.00    3768289.00        0.07058                     397325.00
3768289.00        2.83054
         397375.00    3768289.00        3.91110                     397425.00
3768289.00        4.41610
         397475.00    3768289.00        3.92189                     397525.00
3768289.00        2.92562
         396425.00    3768339.00        0.06336                     396475.00
3768339.00        0.06921
         396525.00    3768339.00        0.07631                     397275.00
3768339.00        1.36179
         397325.00    3768339.00        1.86072                     397375.00
3768339.00        2.37700
         397425.00    3768339.00        2.66688                     397475.00
3768339.00        2.56659
         397525.00    3768339.00        2.17934                     396425.00
3768389.00        0.06197
         396475.00    3768389.00        0.06760                     396525.00
3768389.00        0.07431
         397225.00    3768389.00        0.77915                     397275.00
```

3768389.00 1.01668
397325.00 3768389.00 1.30578 397375.00
3768389.00 1.59080
397425.00 3768389.00 1.76501 397475.00
3768389.00 1.75983
397525.00 3768389.00 1.59157 396425.00
3768439.00 0.06056
396475.00 3768439.00 0.06584 396525.00
3768439.00 0.07211
397175.00 3768439.00 0.49267 397225.00
3768439.00 0.62599
397275.00 3768439.00 0.78296 397325.00
3768439.00 0.96018
397375.00 3768439.00 1.13422 397425.00
3768439.00 1.25706
397475.00 3768439.00 1.27366 397525.00
3768439.00 1.19804
396425.00 3768489.00 0.05890 396475.00
3768489.00 0.06390
396525.00 3768489.00 0.06980 397075.00
3768489.00 0.28047
397125.00 3768489.00 0.33692 397175.00
3768489.00 0.41196
397225.00 3768489.00 0.50821 397275.00
3768489.00 0.61861
397325.00 3768489.00 0.72961 397375.00
3768489.00 0.84485
397425.00 3768489.00 0.92741 397475.00
3768489.00 0.92964
397525.00 3768489.00 0.91174 396425.00
3768539.00 0.05717
396475.00 3768539.00 0.06190 396525.00
3768539.00 0.06734
396575.00 3768539.00 0.07296 397025.00
3768539.00 0.21217
397075.00 3768539.00 0.24861 397125.00
3768539.00 0.29331
397175.00 3768539.00 0.35050 397225.00
3768539.00 0.41876
397275.00 3768539.00 0.49962 397325.00
3768539.00 0.57761
397375.00 3768539.00 0.65546 397425.00
3768539.00 0.69614

*** MODELOPTs: RegDFAULT CONC ELEV URBAN ADJ_U*

*** THE PERIOD (43848 HRS) AVERAGE CONCENTRATION
VALUES FOR SOURCE GROUP: JS ***
INCLUDING SOURCE(S): JS ,

*** DISCRETE CARTESIAN RECEPTOR
POINTS ***

** CONC OF PM_10 IN MICROGRAMS/M**3
**

X-COORD (M)	Y-COORD (M)	CONC	X-COORD (M)	Y-COORD (M)	CONC
397475.00	3768539.00	0.71568	397525.00	3768539.00	0.70578
396425.00	3768589.00	0.05499	396475.00	3768589.00	0.05980
396525.00	3768589.00	0.06463	396575.00	3768589.00	0.06960
396625.00	3768589.00	0.07339	396825.00	3768589.00	0.11612
396875.00	3768589.00	0.13054	396925.00	3768589.00	0.14700
396975.00	3768589.00	0.16805	397025.00	3768589.00	0.19288
397075.00	3768589.00	0.22154	397125.00	3768589.00	0.25849
397175.00	3768589.00	0.30180	397225.00	3768589.00	0.35131
397275.00	3768589.00	0.40739	397325.00	3768589.00	0.46883
397375.00	3768589.00	0.52288	397425.00	3768589.00	0.54675
397475.00	3768589.00	0.56353	397525.00	3768589.00	0.56356
396425.00	3768639.00	0.05082	396475.00	3768639.00	0.05764
396525.00	3768639.00	0.05974	396575.00	3768639.00	0.06668
396625.00	3768639.00	0.07292	396675.00	3768639.00	0.08030
396725.00	3768639.00	0.08849	396775.00	3768639.00	0.09771
396825.00	3768639.00	0.10850	396875.00	3768639.00	0.12099
396925.00	3768639.00	0.13558	396975.00	3768639.00	0.15334
397025.00	3768639.00	0.17399	397075.00	3768639.00	0.19728
397125.00	3768639.00	0.22290	397175.00		

3768639.00 0.25972
397225.00 3768639.00 0.29833 397275.00
3768639.00 0.34147
397325.00 3768639.00 0.38634 397375.00
3768639.00 0.42627
397425.00 3768639.00 0.45814 397475.00
3768639.00 0.45582
397525.00 3768639.00 0.46068 396425.00
3768689.00 0.04810
396475.00 3768689.00 0.05548 396525.00
3768689.00 0.05975
396575.00 3768689.00 0.06463 396625.00
3768689.00 0.07007
396675.00 3768689.00 0.07632 396725.00
3768689.00 0.08335
396775.00 3768689.00 0.09147 396825.00
3768689.00 0.10086
396875.00 3768689.00 0.11192 396925.00
3768689.00 0.12459
396975.00 3768689.00 0.13940 397025.00
3768689.00 0.15678
397075.00 3768689.00 0.17718 397125.00
3768689.00 0.19717
397175.00 3768689.00 0.22574 397225.00
3768689.00 0.25693
397275.00 3768689.00 0.28937 397325.00
3768689.00 0.32296
397375.00 3768689.00 0.35391 397425.00
3768689.00 0.37874
397475.00 3768689.00 0.39471 397525.00
3768689.00 0.39985

*** MODELOPTs: RegDFAULT CONC ELEV URBAN ADJ_U*

*** THE PERIOD (43848 HRS) AVERAGE CONCENTRATION VALUES FOR SOURCE GROUP: MISC1 ***
INCLUDING SOURCE(S): L0001845 , L0001846 , L0001847 , L0001848 , L0001849 , L0001850 , L0001851 , L0001852 , L0001853 , L0001854 , L0001855 , L0001856 , L0001857 , L0001858 , L0001859 , L0001860 , L0001861 , L0001862 , L0001863 , L0001864 , L0001865 , L0001866 , L0001867 , L0001868 , L0001869 ,

*** DISCRETE CARTESIAN RECEPTOR POINTS ***

** CONC OF PM_10 IN MICROGRAMS/M**3 **

X-COORD (M)	Y-COORD (M)	CONC	X-COORD (M)	Y-COORD (M)	CONC
396166.28	3767377.28	0.04508	396266.28	3767377.28	0.05053
396366.28	3767377.28	0.05904	396466.28	3767377.28	0.06807
396566.28	3767377.28	0.07979	396666.28	3767377.28	0.08930
396766.28	3767377.28	0.09740	396866.28	3767377.28	0.10588
396966.28	3767377.28	0.11609	397066.28	3767377.28	0.12258
397166.28	3767377.28	0.12210	397266.28	3767377.28	0.11663
397366.28	3767377.28	0.11389	397466.28	3767377.28	0.10865
397566.28	3767377.28	0.09837	397666.28	3767377.28	0.08777
397766.28	3767377.28	0.07517	397866.28	3767377.28	0.06578
396166.28	3767477.28	0.04804	396266.28	3767477.28	0.05350
396366.28	3767477.28	0.06389	396466.28	3767477.28	0.07582
396566.28	3767477.28	0.08967	396666.28	3767477.28	0.10416
396766.28	3767477.28	0.11979	396866.28	3767477.28	0.13611
396966.28	3767477.28	0.15472	397066.28	3767477.28	0.16836
397166.28	3767477.28	0.17094	397266.28	3767477.28	0.16320
397366.28	3767477.28	0.15379	397466.28		

3767477.28 0.14362
397566.28 3767477.28 0.12682 397666.28
3767477.28 0.10878
397766.28 3767477.28 0.09246 397866.28
3767477.28 0.07869
396166.28 3767577.28 0.04963 396266.28
3767577.28 0.05661
396366.28 3767577.28 0.06720 396466.28
3767577.28 0.08164
396566.28 3767577.28 0.10062 396666.28
3767577.28 0.12416
396766.28 3767577.28 0.14503 396866.28
3767577.28 0.17896
396966.28 3767577.28 0.21288 397066.28
3767577.28 0.24105
397166.28 3767577.28 0.25565 397266.28
3767577.28 0.24571
397366.28 3767577.28 0.22295 397466.28
3767577.28 0.20044
397566.28 3767577.28 0.16797 397666.28
3767577.28 0.13819
397766.28 3767577.28 0.11282 397866.28
3767577.28 0.09289
396166.28 3767677.28 0.05171 396266.28
3767677.28 0.05947
396366.28 3767677.28 0.07155 396466.28
3767677.28 0.08870
396566.28 3767677.28 0.11039 396666.28
3767677.28 0.13513
396766.28 3767677.28 0.17722 396866.28
3767677.28 0.24084
396966.28 3767677.28 0.32106 397066.28
3767677.28 0.38640
397166.28 3767677.28 0.42670 397266.28
3767677.28 0.42859
397366.28 3767677.28 0.35805 397466.28
3767677.28 0.29982
397566.28 3767677.28 0.23012 397666.28
3767677.28 0.17670
397766.28 3767677.28 0.13748 397866.28
3767677.28 0.10833
396166.28 3767777.28 0.05289 396266.28
3767777.28 0.06279
396366.28 3767777.28 0.07503 396466.28
3767777.28 0.09271
396566.28 3767777.28 0.11509 396666.28
3767777.28 0.15024
396766.28 3767777.28 0.21249 396866.28
3767777.28 0.31737

*** MODELOPTs: RegDFAULT CONC ELEV URBAN ADJ_U*

*** THE PERIOD (43848 HRS) AVERAGE CONCENTRATION VALUES FOR SOURCE GROUP: MISC1 ***
INCLUDING SOURCE(S): L0001845 , L0001846 , L0001847 , L0001848 , L0001849 , L0001850 , L0001851 , L0001852 , L0001853 , L0001854 , L0001855 , L0001856 , L0001857 , L0001858 , L0001859 , L0001860 , L0001861 , L0001862 , L0001863 , L0001864 , L0001865 , L0001866 , L0001867 , L0001868 , L0001869 ,

*** DISCRETE CARTESIAN RECEPTOR POINTS ***

** CONC OF PM_10 IN MICROGRAMS/M**3 **

X-COORD (M)	Y-COORD (M)	CONC	X-COORD (M)	Y-COORD (M)	CONC
396966.28	3767777.28	0.48504	397066.28	3767777.28	0.69733
397166.28	3767777.28	0.87512	397266.28	3767777.28	0.88512
397366.28	3767777.28	0.66094	397466.28	3767777.28	0.47043
397566.28	3767777.28	0.32188	397666.28	3767777.28	0.22590
397766.28	3767777.28	0.16662	397866.28	3767777.28	0.12668
396166.28	3767877.28	0.05344	396266.28	3767877.28	0.06373
396366.28	3767877.28	0.07719	396466.28	3767877.28	0.09474
396566.28	3767877.28	0.11970	397466.28	3767877.28	0.74118
397566.28	3767877.28	0.44561	397666.28	3767877.28	0.28509
397766.28	3767877.28	0.19695	397866.28	3767877.28	0.14401
396166.28	3767977.28	0.05292	396266.28	3767977.28	0.06343
396366.28	3767977.28	0.07698	396466.28	3767977.28	0.09438
397466.28	3767977.28	1.23188	397566.28	3767977.28	0.60116
397666.28	3767977.28	0.34925	397766.28	3767977.28	0.23044
397866.28	3767977.28	0.15781	396166.28	3768077.28	0.05339
396266.28	3768077.28	0.06241	396366.28		

3768077.28 0.07553
396466.28 3768077.28 0.09400 397466.28
3768077.28 1.90054
397566.28 3768077.28 0.79973 397666.28
3768077.28 0.42963
397766.28 3768077.28 0.26829 397866.28
3768077.28 0.17941
396166.28 3768177.28 0.05263 396266.28
3768177.28 0.06173
396366.28 3768177.28 0.07439 396466.28
3768177.28 0.09104
397466.28 3768177.28 2.38592 397566.28
3768177.28 0.91226
397666.28 3768177.28 0.47849 397766.28
3768177.28 0.29989
397866.28 3768177.28 0.19595 396166.28
3768277.28 0.05115
396266.28 3768277.28 0.05932 396366.28
3768277.28 0.07104
396466.28 3768277.28 0.08643 397366.28
3768277.28 3.23053
397466.28 3768277.28 1.76911 397566.28
3768277.28 0.89366
397666.28 3768277.28 0.49332 397766.28
3768277.28 0.30951
397866.28 3768277.28 0.21516 396166.28
3768377.28 0.04884
396266.28 3768377.28 0.05686 396366.28
3768377.28 0.06724
396466.28 3768377.28 0.08097 397266.28
3768377.28 1.07588
397366.28 3768377.28 1.28135 397466.28
3768377.28 1.07629
397566.28 3768377.28 0.73315 397666.28
3768377.28 0.47759
397766.28 3768377.28 0.31812 397866.28
3768377.28 0.22899
396166.28 3768477.28 0.04644 396266.28
3768477.28 0.05407
396366.28 3768477.28 0.06326 396466.28
3768477.28 0.07476
397166.28 3768477.28 0.46399 397266.28
3768477.28 0.63002
397366.28 3768477.28 0.72353 397466.28
3768477.28 0.67893
397566.28 3768477.28 0.53367 397666.28
3768477.28 0.39310
397766.28 3768477.28 0.29732 397866.28
3768477.28 0.21836

*** MODELOPTs: RegDFAULT CONC ELEV URBAN ADJ_U*

*** THE PERIOD (43848 HRS) AVERAGE CONCENTRATION VALUES FOR SOURCE GROUP: MISC1 ***
INCLUDING SOURCE(S): L0001845 , L0001846 , L0001847 , L0001848 , L0001849 , L0001850 , L0001851 , L0001852 , L0001853 , L0001854 , L0001855 , L0001856 , L0001857 , L0001858 , L0001859 , L0001860 , L0001861 , L0001862 , L0001863 , L0001864 , L0001865 , L0001866 , L0001867 , L0001868 , L0001869 ,

*** DISCRETE CARTESIAN RECEPTOR POINTS ***

** CONC OF PM_10 IN MICROGRAMS/M**3 **

X-COORD (M)	Y-COORD (M)	CONC	X-COORD (M)	Y-COORD (M)	CONC
396166.28	3768577.28	0.04386	396266.28	3768577.28	0.05017
396366.28	3768577.28	0.05808	396466.28	3768577.28	0.06868
396566.28	3768577.28	0.08219	396866.28	3768577.28	0.15603
396966.28	3768577.28	0.19848	397066.28	3768577.28	0.25276
397166.28	3768577.28	0.32646	397266.28	3768577.28	0.40320
397366.28	3768577.28	0.46148	397466.28	3768577.28	0.45257
397566.28	3768577.28	0.39774	397666.28	3768577.28	0.32101
397766.28	3768577.28	0.24941	397866.28	3768577.28	0.19621
396166.28	3768677.28	0.04118	396266.28	3768677.28	0.04699
396366.28	3768677.28	0.05382	396466.28	3768677.28	0.06265
396566.28	3768677.28	0.07392	396666.28	3768677.28	0.08798
396766.28	3768677.28	0.10562	396866.28	3768677.28	0.12872
396966.28	3768677.28	0.15778	397066.28	3768677.28	0.19467
397166.28	3768677.28	0.23695	397366.28	3768677.28	0.31864
397466.28	3768677.28	0.32323	397566.28	3768677.28	0.29860
397666.28	3768677.28	0.25722	397766.28		

3768677.28 0.21112
397866.28 3768677.28 0.17320 396166.28
3768777.28 0.03894
396266.28 3768777.28 0.04372 396366.28
3768777.28 0.04990
396466.28 3768777.28 0.05740 396566.28
3768777.28 0.06589
396666.28 3768777.28 0.07700 396766.28
3768777.28 0.09096
396866.28 3768777.28 0.10803 396966.28
3768777.28 0.12852
397066.28 3768777.28 0.15324 397166.28
3768777.28 0.18020
397266.28 3768777.28 0.21020 397366.28
3768777.28 0.23100
397466.28 3768777.28 0.23583 397566.28
3768777.28 0.22479
397666.28 3768777.28 0.20254 397766.28
3768777.28 0.17536
397866.28 3768777.28 0.14970 396166.28
3768877.28 0.03630
396266.28 3768877.28 0.04086 396366.28
3768877.28 0.04574
396466.28 3768877.28 0.05261 396566.28
3768877.28 0.05980
396666.28 3768877.28 0.06831 396766.28
3768877.28 0.07929
396866.28 3768877.28 0.09374 396966.28
3768877.28 0.10862
397066.28 3768877.28 0.12460 397166.28
3768877.28 0.14288
397266.28 3768877.28 0.16216 397366.28
3768877.28 0.17527
397466.28 3768877.28 0.18081 397566.28
3768877.28 0.17652
397666.28 3768877.28 0.16273 397766.28
3768877.28 0.14569
397866.28 3768877.28 0.12871 396425.00
3767739.00 0.08397
396475.00 3767739.00 0.09359 396525.00
3767739.00 0.10346
396575.00 3767739.00 0.11705 396625.00
3767739.00 0.12926
396675.00 3767739.00 0.14792 396725.00
3767739.00 0.17615
396775.00 3767739.00 0.20355 396825.00
3767739.00 0.24508
396875.00 3767739.00 0.29832 396925.00
3767739.00 0.35752

*** MODELOPTs: RegDFAULT CONC ELEV URBAN ADJ_U*

*** THE PERIOD (43848 HRS) AVERAGE CONCENTRATION VALUES FOR SOURCE GROUP: MISC1 ***
INCLUDING SOURCE(S): L0001845 , L0001846 , L0001847 , L0001848 , L0001849 , L0001850 , L0001851 , L0001852 , L0001853 , L0001854 , L0001855 , L0001856 , L0001857 , L0001858 , L0001859 , L0001860 , L0001861 , L0001862 , L0001863 , L0001864 , L0001865 , L0001866 , L0001867 , L0001868 , L0001869 ,

*** DISCRETE CARTESIAN RECEPTOR POINTS ***

** CONC OF PM_10 IN MICROGRAMS/M**3 **

X-COORD (M)	Y-COORD (M)	CONC	X-COORD (M)	Y-COORD (M)	CONC
396975.00	3767739.00	0.42520	397025.00	3767739.00	0.49479
397075.00	3767739.00	0.55764	397125.00	3767739.00	0.61037
397175.00	3767739.00	0.64687	397225.00	3767739.00	0.65298
397275.00	3767739.00	0.63968	397325.00	3767739.00	0.57412
397375.00	3767739.00	0.49854	397425.00	3767739.00	0.42991
397475.00	3767739.00	0.38211	397525.00	3767739.00	0.32397
396425.00	3767789.00	0.08554	396475.00	3767789.00	0.09480
396525.00	3767789.00	0.10522	396575.00	3767789.00	0.11776
396625.00	3767789.00	0.13438	396675.00	3767789.00	0.15634
396725.00	3767789.00	0.18780	396775.00	3767789.00	0.22314
396825.00	3767789.00	0.27327	396875.00	3767789.00	0.33778
396925.00	3767789.00	0.41923	396975.00	3767789.00	0.52812
397025.00	3767789.00	0.65073	397075.00	3767789.00	0.77566
397125.00	3767789.00	0.89404	397175.00	3767789.00	0.98173
397225.00	3767789.00	1.00044	397275.00	3767789.00	0.96555
397325.00	3767789.00	0.84441	397375.00		

3767789.00 0.69140
397425.00 3767789.00 0.56284 397475.00
3767789.00 0.48014
397525.00 3767789.00 0.39207 396425.00
3767839.00 0.08672
396475.00 3767839.00 0.09675 396525.00
3767839.00 0.10640
396575.00 3767839.00 0.12068 396625.00
3767839.00 0.13873
396675.00 3767839.00 0.16685 396725.00
3767839.00 0.19918
396775.00 3767839.00 0.24078 396825.00
3767839.00 0.29768
396875.00 3767839.00 0.37632 396925.00
3767839.00 0.48459
396975.00 3767839.00 0.64732 397025.00
3767839.00 0.86926
397075.00 3767839.00 1.10495 397125.00
3767839.00 1.39344
397175.00 3767839.00 1.68099 397225.00
3767839.00 1.80868
397275.00 3767839.00 1.67410 397325.00
3767839.00 1.35956
397375.00 3767839.00 1.00974 397475.00
3767839.00 0.58685
397525.00 3767839.00 0.47569 396425.00
3767889.00 0.08736
396475.00 3767889.00 0.09571 396525.00
3767889.00 0.10780
396575.00 3767889.00 0.12388 397475.00
3767889.00 0.76143
397525.00 3767889.00 0.57394 396425.00
3767939.00 0.08759
396475.00 3767939.00 0.09616 396525.00
3767939.00 0.10891
397475.00 3767939.00 0.96475 397525.00
3767939.00 0.68960
396425.00 3767989.00 0.08631 396475.00
3767989.00 0.09632
397475.00 3767989.00 1.20484 397525.00
3767989.00 0.82153
396425.00 3768039.00 0.08583 396475.00
3768039.00 0.09623
397475.00 3768039.00 1.49835 397525.00
3768039.00 0.98781
396425.00 3768089.00 0.08524 396475.00
3768089.00 0.09572
397475.00 3768089.00 1.81412 397525.00
3768089.00 1.13352

*** MODELOPTs: RegDFAULT CONC ELEV URBAN ADJ_U*

*** THE PERIOD (43848 HRS) AVERAGE CONCENTRATION VALUES FOR SOURCE GROUP: MISC1 ***
INCLUDING SOURCE(S): L0001845 , L0001846 , L0001847 , L0001848 , L0001849 , L0001850 , L0001851 , L0001852 , L0001853 , L0001854 , L0001855 , L0001856 , L0001857 , L0001858 , L0001859 , L0001860 , L0001861 , L0001862 , L0001863 , L0001864 , L0001865 , L0001866 , L0001867 , L0001868 , L0001869 ,

*** DISCRETE CARTESIAN RECEPTOR POINTS ***

** CONC OF PM_10 IN MICROGRAMS/M**3 **

X-COORD (M)	Y-COORD (M)	CONC	X-COORD (M)	Y-COORD (M)	CONC
396425.00	3768139.00	0.08547	396475.00	3768139.00	0.09423
397425.00	3768139.00	4.20768	397475.00	3768139.00	2.07743
397525.00	3768139.00	1.24291	396425.00	3768189.00	0.08372
396475.00	3768189.00	0.09231	397375.00	3768189.00	18.47820
397425.00	3768189.00	4.05910	397475.00	3768189.00	2.14256
397525.00	3768189.00	1.30061	396425.00	3768239.00	0.08166
396475.00	3768239.00	0.08999	397375.00	3768239.00	5.89520
397425.00	3768239.00	2.90951	397475.00	3768239.00	1.75534
397525.00	3768239.00	1.17530	396425.00	3768289.00	0.07914
396475.00	3768289.00	0.08737	397325.00	3768289.00	2.59733
397375.00	3768289.00	2.75732	397425.00	3768289.00	2.27024
397475.00	3768289.00	1.62758	397525.00	3768289.00	1.14269
396425.00	3768339.00	0.07697	396475.00	3768339.00	0.08456
396525.00	3768339.00	0.09435	397275.00	3768339.00	1.41571
397325.00	3768339.00	1.63806	397375.00	3768339.00	1.70256
397425.00	3768339.00	1.55595	397475.00		

3768339.00 1.27797
397525.00 3768339.00 1.00179 396425.00
3768389.00 0.07429
396475.00 3768389.00 0.08149 396525.00
3768389.00 0.09045
397225.00 3768389.00 0.88168 397275.00
3768389.00 1.02732
397325.00 3768389.00 1.14554 397375.00
3768389.00 1.18356
397425.00 3768389.00 1.12129 397475.00
3768389.00 0.98655
397525.00 3768389.00 0.82504 396425.00
3768439.00 0.07209
396475.00 3768439.00 0.07839 396525.00
3768439.00 0.08648
397175.00 3768439.00 0.56483 397225.00
3768439.00 0.68324
397275.00 3768439.00 0.77600 397325.00
3768439.00 0.85445
397375.00 3768439.00 0.88952 397425.00
3768439.00 0.86662
397475.00 3768439.00 0.78262 397525.00
3768439.00 0.68337
396425.00 3768489.00 0.06921 396475.00
3768489.00 0.07512
396525.00 3768489.00 0.08264 397075.00
3768489.00 0.33468
397125.00 3768489.00 0.38932 397175.00
3768489.00 0.45593
397225.00 3768489.00 0.53294 397275.00
3768489.00 0.60692
397325.00 3768489.00 0.65985 397375.00
3768489.00 0.68488
397425.00 3768489.00 0.67642 397475.00
3768489.00 0.63512
397525.00 3768489.00 0.57768 396425.00
3768539.00 0.06638
396475.00 3768539.00 0.07203 396525.00
3768539.00 0.07880
396575.00 3768539.00 0.08729 397025.00
3768539.00 0.25091
397075.00 3768539.00 0.28788 397125.00
3768539.00 0.32943
397175.00 3768539.00 0.37871 397225.00
3768539.00 0.43005
397275.00 3768539.00 0.48754 397325.00
3768539.00 0.52549
397375.00 3768539.00 0.54475 397425.00
3768539.00 0.54197

*** MODELOPTs: RegDFAULT CONC ELEV URBAN ADJ_U*

*** THE PERIOD (43848 HRS) AVERAGE CONCENTRATION VALUES FOR SOURCE GROUP: MISC1 ***
INCLUDING SOURCE(S): L0001845 , L0001846 , L0001847 , L0001848 , L0001849 , L0001850 , L0001851 , L0001852 , L0001853 , L0001854 , L0001855 , L0001856 , L0001857 , L0001858 , L0001859 , L0001860 , L0001861 , L0001862 , L0001863 , L0001864 , L0001865 , L0001866 , L0001867 , L0001868 , L0001869 ,

*** DISCRETE CARTESIAN RECEPTOR POINTS ***

** CONC OF PM_10 IN MICROGRAMS/M**3 **

X-COORD (M)	Y-COORD (M)	CONC	X-COORD (M)	Y-COORD (M)	CONC
397475.00	3768539.00	0.51887	397525.00	3768539.00	0.48154
396425.00	3768589.00	0.06376	396475.00	3768589.00	0.06894
396525.00	3768589.00	0.07542	396575.00	3768589.00	0.08248
396625.00	3768589.00	0.09065	396825.00	3768589.00	0.13884
396875.00	3768589.00	0.15596	396925.00	3768589.00	0.17401
396975.00	3768589.00	0.19744	397025.00	3768589.00	0.22316
397075.00	3768589.00	0.25030	397125.00	3768589.00	0.28443
397175.00	3768589.00	0.32054	397225.00	3768589.00	0.35627
397275.00	3768589.00	0.39064	397325.00	3768589.00	0.42682
397375.00	3768589.00	0.44228	397425.00	3768589.00	0.44390
397475.00	3768589.00	0.43044	397525.00	3768589.00	0.40670
396425.00	3768639.00	0.06084	396475.00	3768639.00	0.06580
396525.00	3768639.00	0.07162	396575.00	3768639.00	0.07812
396625.00	3768639.00	0.08576	396675.00	3768639.00	0.09432
396725.00	3768639.00	0.10410	396775.00	3768639.00	0.11499
396825.00	3768639.00	0.12765	396875.00		

3768639.00 0.14163
396925.00 3768639.00 0.15737 396975.00
3768639.00 0.17617
397025.00 3768639.00 0.19669 397075.00
3768639.00 0.21808
397125.00 3768639.00 0.23964 397175.00
3768639.00 0.27131
397225.00 3768639.00 0.29977 397275.00
3768639.00 0.32762
397325.00 3768639.00 0.35244 397375.00
3768639.00 0.36549
397425.00 3768639.00 0.37049 397475.00
3768639.00 0.36256
397525.00 3768639.00 0.34742 396425.00
3768689.00 0.05809
396475.00 3768689.00 0.06277 396525.00
3768689.00 0.06788
396575.00 3768689.00 0.07395 396625.00
3768689.00 0.08040
396675.00 3768689.00 0.08795 396725.00
3768689.00 0.09613
396775.00 3768689.00 0.10553 396825.00
3768689.00 0.11615
396875.00 3768689.00 0.12835 396925.00
3768689.00 0.14166
396975.00 3768689.00 0.15663 397025.00
3768689.00 0.17354
397075.00 3768689.00 0.19258 397125.00
3768689.00 0.20885
397175.00 3768689.00 0.23293 397225.00
3768689.00 0.25665
397275.00 3768689.00 0.27753 397325.00
3768689.00 0.29587
397375.00 3768689.00 0.30852 397425.00
3768689.00 0.31329
397475.00 3768689.00 0.31079 397525.00
3768689.00 0.30140

*** MODELOPTs: RegDFAULT CONC ELEV URBAN ADJ_U*

*** THE PERIOD (43848 HRS) AVERAGE CONCENTRATION VALUES FOR SOURCE GROUP: MISC2 ***
INCLUDING SOURCE(S): L0001870 , L0001871 , L0001872 , L0001873 , L0001874 , L0001875 , L0001876 , L0001877 , L0001878 , L0001879 , L0001880 , L0001881 , L0001882 , L0001883 , L0001884 , L0001885 , L0001886 , L0001887 , L0001888 , L0001889 , L0001890 , L0001891 , L0001892 , L0001893 , L0001894 , L0001895 , L0001896 , L0001897 , . . . ,

*** DISCRETE CARTESIAN RECEPTOR POINTS ***

** CONC OF PM_10 IN MICROGRAMS/M**3 **

X-COORD (M)	Y-COORD (M)	CONC	X-COORD (M)	Y-COORD (M)	CONC
396166.28	3767377.28	0.05632	396266.28	3767377.28	0.06121
396366.28	3767377.28	0.06879	396466.28	3767377.28	0.07513
396566.28	3767377.28	0.08270	396666.28	3767377.28	0.08542
396766.28	3767377.28	0.08569	396866.28	3767377.28	0.08635
396966.28	3767377.28	0.08904	397066.28	3767377.28	0.08913
397166.28	3767377.28	0.08453	397266.28	3767377.28	0.07736
397366.28	3767377.28	0.07273	397466.28	3767377.28	0.06755
397566.28	3767377.28	0.06071	397666.28	3767377.28	0.05444
397766.28	3767377.28	0.04751	397866.28	3767377.28	0.04245
396166.28	3767477.28	0.06398	396266.28	3767477.28	0.06957
396366.28	3767477.28	0.08073	396466.28	3767477.28	0.09140
396566.28	3767477.28	0.10115	396666.28	3767477.28	0.10760
396766.28	3767477.28	0.11188	396866.28	3767477.28	0.11451
396966.28	3767477.28	0.11818	397066.28	3767477.28	0.11800
397166.28	3767477.28	0.11099	397266.28	3767477.28	0.09961

397366.28 3767477.28 0.08972 397466.28 3767477.28 0.08159
397566.28 3767477.28 0.07202 397666.28 3767477.28 0.06290
397766.28 3767477.28 0.05496 397866.28 3767477.28 0.04829
396166.28 3767577.28 0.07050 396266.28 3767577.28 0.07971
396366.28 3767577.28 0.09288 396466.28 3767577.28 0.10905
396566.28 3767577.28 0.12731 396666.28 3767577.28 0.14483
396766.28 3767577.28 0.15017 396866.28 3767577.28 0.16252
396966.28 3767577.28 0.16681 397066.28 3767577.28 0.16332
397166.28 3767577.28 0.15238 397266.28 3767577.28 0.13317
397366.28 3767577.28 0.11460 397466.28 3767577.28 0.10109
397566.28 3767577.28 0.08627 397666.28 3767577.28 0.07362
397766.28 3767577.28 0.06287 397866.28 3767577.28 0.05419
396166.28 3767677.28 0.07884 396266.28 3767677.28 0.09132
396366.28 3767677.28 0.11003 396466.28 3767677.28 0.13483
396566.28 3767677.28 0.16136 396666.28 3767677.28 0.18287
396766.28 3767677.28 0.21749 396866.28 3767677.28 0.25773
396966.28 3767677.28 0.28203 397066.28 3767677.28 0.26010
397166.28 3767677.28 0.22470 397266.28 3767677.28 0.19240
397366.28 3767677.28 0.15309 397466.28 3767677.28 0.12915
397566.28 3767677.28 0.10487 397666.28 3767677.28 0.08615
397766.28 3767677.28 0.07170 397866.28 3767677.28 0.06020
396166.28 3767777.28 0.08648 396266.28 3767777.28 0.10636
396366.28 3767777.28 0.13001 396466.28 3767777.28 0.16266
396566.28 3767777.28 0.19881 396666.28 3767777.28 0.25140
396766.28 3767777.28 0.33756 396866.28 3767777.28 0.46681

*** MODELOPTs: RegDFAULT CONC ELEV URBAN ADJ_U*

*** THE PERIOD (43848 HRS) AVERAGE CONCENTRATION VALUES FOR SOURCE GROUP: MISC2 ***
INCLUDING SOURCE(S): L0001870 , L0001871 , L0001872 , L0001873 , L0001874 , L0001875 , L0001876 , L0001877 , L0001878 , L0001879 , L0001880 , L0001881 , L0001882 , L0001883 , L0001884 , L0001885 , L0001886 , L0001887 , L0001888 , L0001889 , L0001890 , L0001891 , L0001892 , L0001893 , L0001894 , L0001895 , L0001896 , L0001897 , . . . ,

*** DISCRETE CARTESIAN RECEPTOR POINTS ***

** CONC OF PM_10 IN MICROGRAMS/M**3 **

X-COORD (M)	Y-COORD (M)	CONC	X-COORD (M)	Y-COORD (M)	CONC
396966.28	3767777.28	0.61698	397066.28	3767777.28	0.51927
397166.28	3767777.28	0.37201	397266.28	3767777.28	0.28961
397366.28	3767777.28	0.21508	397466.28	3767777.28	0.16755
397566.28	3767777.28	0.12889	397666.28	3767777.28	0.10078
397766.28	3767777.28	0.08160	397866.28	3767777.28	0.06726
396166.28	3767877.28	0.09342	396266.28	3767877.28	0.11845
396366.28	3767877.28	0.15213	396466.28	3767877.28	0.19537
396566.28	3767877.28	0.25574	397466.28	3767877.28	0.21686
397566.28	3767877.28	0.15853	397666.28	3767877.28	0.11899
397766.28	3767877.28	0.09267	397866.28	3767877.28	0.07368
396166.28	3767977.28	0.09788	396266.28	3767977.28	0.12828
396366.28	3767977.28	0.17160	396466.28	3767977.28	0.23165
397466.28	3767977.28	0.30225	397566.28	3767977.28	0.19538
397666.28	3767977.28	0.13797	397766.28	3767977.28	0.10192
397866.28	3767977.28	0.07838	396166.28	3768077.28	0.10474

396266.28	3768077.28	0.13556	396366.28	3768077.28	0.18825
396466.28	3768077.28	0.27896	397466.28	3768077.28	0.40053
397566.28	3768077.28	0.23012	397666.28	3768077.28	0.15453
397766.28	3768077.28	0.11324	397866.28	3768077.28	0.08579
396166.28	3768177.28	0.10743	396266.28	3768177.28	0.14282
396366.28	3768177.28	0.20528	396466.28	3768177.28	0.31826
397466.28	3768177.28	0.46838	397566.28	3768177.28	0.26064
397666.28	3768177.28	0.16921	397766.28	3768177.28	0.12294
397866.28	3768177.28	0.09110	396166.28	3768277.28	0.10711
396266.28	3768277.28	0.14034	396366.28	3768277.28	0.20438
396466.28	3768277.28	0.33105	397366.28	3768277.28	0.99480
397466.28	3768277.28	0.47884	397566.28	3768277.28	0.28412
397666.28	3768277.28	0.18267	397766.28	3768277.28	0.12919
397866.28	3768277.28	0.09883	396166.28	3768377.28	0.10302
396266.28	3768377.28	0.13450	396366.28	3768377.28	0.19226
396466.28	3768377.28	0.30714	397266.28	3768377.28	1.21122
397366.28	3768377.28	0.74044	397466.28	3768377.28	0.44929
397566.28	3768377.28	0.29213	397666.28	3768377.28	0.19809
397766.28	3768377.28	0.14070	397866.28	3768377.28	0.10823
396166.28	3768477.28	0.09626	396266.28	3768477.28	0.12553
396366.28	3768477.28	0.17576	396466.28	3768477.28	0.25869
397166.28	3768477.28	0.90136	397266.28	3768477.28	0.76346
397366.28	3768477.28	0.57295	397466.28	3768477.28	0.40207
397566.28	3768477.28	0.27010	397666.28	3768477.28	0.19250
397766.28	3768477.28	0.14765	397866.28	3768477.28	0.11118

*** MODELOPTs: RegDFAULT CONC ELEV URBAN ADJ_U*

*** THE PERIOD (43848 HRS) AVERAGE CONCENTRATION VALUES FOR SOURCE GROUP: MISC2 ***
INCLUDING SOURCE(S): L0001870 , L0001871 , L0001872 , L0001873 , L0001874 , L0001875 , L0001876 , L0001877 , L0001878 , L0001879 , L0001880 , L0001881 , L0001882 , L0001883 , L0001884 , L0001885 , L0001886 , L0001887 , L0001888 , L0001889 , L0001890 , L0001891 , L0001892 , L0001893 , L0001894 , L0001895 , L0001896 , L0001897 , . . . ,

*** DISCRETE CARTESIAN RECEPTOR POINTS ***

** CONC OF PM_10 IN MICROGRAMS/M**3 **

X-COORD (M)	Y-COORD (M)	CONC	X-COORD (M)	Y-COORD (M)	CONC
396166.28	3768577.28	0.08584	396266.28	3768577.28	0.11306
396366.28	3768577.28	0.15181	396466.28	3768577.28	0.21085
396566.28	3768577.28	0.33023	396866.28	3768577.28	0.87558
396966.28	3768577.28	0.80730	397066.28	3768577.28	0.69150
397166.28	3768577.28	0.60459	397266.28	3768577.28	0.51442
397366.28	3768577.28	0.43091	397466.28	3768577.28	0.33410
397566.28	3768577.28	0.24868	397666.28	3768577.28	0.18561
397766.28	3768577.28	0.14030	397866.28	3768577.28	0.11023
396166.28	3768677.28	0.07743	396266.28	3768677.28	0.09743
396366.28	3768677.28	0.12870	396466.28	3768677.28	0.16903
396566.28	3768677.28	0.23679	396666.28	3768677.28	0.32915
396766.28	3768677.28	0.42475	396866.28	3768677.28	0.48951
396966.28	3768677.28	0.49587	397066.28	3768677.28	0.46937
397166.28	3768677.28	0.42497	397366.28	3768677.28	0.33153
397466.28	3768677.28	0.27228	397566.28	3768677.28	0.21743

397666.28 3768677.28 0.17139 397766.28
3768677.28 0.13403
397866.28 3768677.28 0.10775 396166.28
3768777.28 0.07062
396266.28 3768777.28 0.08568 396366.28
3768777.28 0.10932
396466.28 3768777.28 0.13834 396566.28
3768777.28 0.17552
396666.28 3768777.28 0.22549 396766.28
3768777.28 0.27963
396866.28 3768777.28 0.32041 396966.28
3768777.28 0.33620
397066.28 3768777.28 0.33234 397166.28
3768777.28 0.31253
397266.28 3768777.28 0.29124 397366.28
3768777.28 0.25770
397466.28 3768777.28 0.21871 397566.28
3768777.28 0.18196
397666.28 3768777.28 0.15010 397766.28
3768777.28 0.12331
397866.28 3768777.28 0.10219 396166.28
3768877.28 0.06303
396266.28 3768877.28 0.07604 396366.28
3768877.28 0.09125
396466.28 3768877.28 0.11462 396566.28
3768877.28 0.13990
396666.28 3768877.28 0.16898 396766.28
3768877.28 0.20237
396866.28 3768877.28 0.23707 396966.28
3768877.28 0.25057
397066.28 3768877.28 0.24820 397166.28
3768877.28 0.23960
397266.28 3768877.28 0.22692 397366.28
3768877.28 0.20478
397466.28 3768877.28 0.18051 397566.28
3768877.28 0.15570
397666.28 3768877.28 0.13146 397766.28
3768877.28 0.11130
397866.28 3768877.28 0.09501 396425.00
3767739.00 0.13965
396475.00 3767739.00 0.15523 396525.00
3767739.00 0.16923
396575.00 3767739.00 0.18887 396625.00
3767739.00 0.20251
396675.00 3767739.00 0.22530 396725.00
3767739.00 0.26035
396775.00 3767739.00 0.28670 396825.00
3767739.00 0.32806
396875.00 3767739.00 0.37598 396925.00
3767739.00 0.41258

*** MODELOPTs: RegDFAULT CONC ELEV URBAN ADJ_U*

*** THE PERIOD (43848 HRS) AVERAGE CONCENTRATION VALUES FOR SOURCE GROUP: MISC2 ***
INCLUDING SOURCE(S): L0001870 , L0001871 , L0001872 , L0001873 , L0001874 , L0001875 , L0001876 , L0001877 , L0001878 , L0001879 , L0001880 , L0001881 , L0001882 , L0001883 , L0001884 , L0001885 , L0001886 , L0001887 , L0001888 , L0001889 , L0001890 , L0001891 , L0001892 , L0001893 , L0001894 , L0001895 , L0001896 , L0001897 , . . . ,

*** DISCRETE CARTESIAN RECEPTOR POINTS ***

** CONC OF PM_10 IN MICROGRAMS/M**3 **

X-COORD (M)	Y-COORD (M)	CONC	X-COORD (M)	Y-COORD (M)	CONC
396975.00	3767739.00	0.43152	397025.00	3767739.00	0.41636
397075.00	3767739.00	0.37501	397125.00	3767739.00	0.33164
397175.00	3767739.00	0.29566	397225.00	3767739.00	0.26389
397275.00	3767739.00	0.23958	397325.00	3767739.00	0.20937
397375.00	3767739.00	0.18301	397425.00	3767739.00	0.16194
397475.00	3767739.00	0.14795	397525.00	3767739.00	0.13115
396425.00	3767789.00	0.15252	396475.00	3767789.00	0.16936
396525.00	3767789.00	0.18709	396575.00	3767789.00	0.20757
396625.00	3767789.00	0.23434	396675.00	3767789.00	0.26857
396725.00	3767789.00	0.31730	396775.00	3767789.00	0.36562
396825.00	3767789.00	0.43416	396875.00	3767789.00	0.51787
396925.00	3767789.00	0.61382	396975.00	3767789.00	0.71450
397025.00	3767789.00	0.68503	397075.00	3767789.00	0.55562
397125.00	3767789.00	0.45497	397175.00	3767789.00	0.38710
397225.00	3767789.00	0.33430	397275.00	3767789.00	0.29738

397325.00 3767789.00 0.25685 397375.00
3767789.00 0.21820
397425.00 3767789.00 0.18792 397475.00
3767789.00 0.16887
397525.00 3767789.00 0.14697 396425.00
3767839.00 0.16640
396475.00 3767839.00 0.18823 396525.00
3767839.00 0.20718
396575.00 3767839.00 0.23660 396625.00
3767839.00 0.27306
396675.00 3767839.00 0.33155 396725.00
3767839.00 0.39505
396775.00 3767839.00 0.47344 396825.00
3767839.00 0.58112
396875.00 3767839.00 0.74149 396925.00
3767839.00 1.01671
396975.00 3767839.00 1.68865 397025.00
3767839.00 1.75177
397075.00 3767839.00 0.87705 397125.00
3767839.00 0.63655
397175.00 3767839.00 0.53061 397225.00
3767839.00 0.45704
397275.00 3767839.00 0.38854 397325.00
3767839.00 0.32567
397375.00 3767839.00 0.26631 397475.00
3767839.00 0.18856
397525.00 3767839.00 0.16539 396425.00
3767889.00 0.18078
396475.00 3767889.00 0.20127 396525.00
3767889.00 0.23220
396575.00 3767889.00 0.27386 397475.00
3767889.00 0.22122
397525.00 3767889.00 0.18656 396425.00
3767939.00 0.19588
396475.00 3767939.00 0.22153 396525.00
3767939.00 0.26177
397475.00 3767939.00 0.25838 397525.00
3767939.00 0.21057
396425.00 3767989.00 0.20695 396475.00
3767989.00 0.24414
397475.00 3767989.00 0.30054 397525.00
3767989.00 0.23754
396425.00 3768039.00 0.22221 396475.00
3768039.00 0.26919
397475.00 3768039.00 0.34382 397525.00
3768039.00 0.26237
396425.00 3768089.00 0.23795 396475.00
3768089.00 0.29560
397475.00 3768089.00 0.39017 397525.00
3768089.00 0.28693

*** MODELOPTs: RegDFAULT CONC ELEV URBAN ADJ_U*

*** THE PERIOD (43848 HRS) AVERAGE CONCENTRATION VALUES FOR SOURCE GROUP: MISC2 ***
INCLUDING SOURCE(S): L0001870 , L0001871 , L0001872 , L0001873 , L0001874 , L0001875 , L0001876 , L0001877 , L0001878 , L0001879 , L0001880 , L0001881 , L0001882 , L0001883 , L0001884 , L0001885 , L0001886 , L0001887 , L0001888 , L0001889 , L0001890 , L0001891 , L0001892 , L0001893 , L0001894 , L0001895 , L0001896 , L0001897 , . . . ,

*** DISCRETE CARTESIAN RECEPTOR POINTS ***

** CONC OF PM_10 IN MICROGRAMS/M**3 **

X-COORD (M)	Y-COORD (M)	CONC	X-COORD (M)	Y-COORD (M)	CONC
396425.00	3768139.00	0.25949	396475.00	3768139.00	0.31822
397425.00	3768139.00	0.61457	397475.00	3768139.00	0.42146
397525.00	3768139.00	0.31002	396425.00	3768189.00	0.26821
396475.00	3768189.00	0.33673	397375.00	3768189.00	1.02887
397425.00	3768189.00	0.62652	397475.00	3768189.00	0.44692
397525.00	3768189.00	0.33063	396425.00	3768239.00	0.27142
396475.00	3768239.00	0.34730	397375.00	3768239.00	0.99991
397425.00	3768239.00	0.61378	397475.00	3768239.00	0.43557
397525.00	3768239.00	0.32947	396425.00	3768289.00	0.26649
396475.00	3768289.00	0.34716	397325.00	3768289.00	1.33947
397375.00	3768289.00	0.89671	397425.00	3768289.00	0.63683
397475.00	3768289.00	0.46488	397525.00	3768289.00	0.34958
396425.00	3768339.00	0.26027	396475.00	3768339.00	0.33615
396525.00	3768339.00	0.47502	397275.00	3768339.00	1.44885
397325.00	3768339.00	1.07250	397375.00	3768339.00	0.78527

397425.00 3768339.00 0.59233 397475.00
3768339.00 0.45385
397525.00 3768339.00 0.35519 396425.00
3768389.00 0.24598
396475.00 3768389.00 0.31538 396525.00
3768389.00 0.43468
397225.00 3768389.00 1.33229 397275.00
3768389.00 1.09538
397325.00 3768389.00 0.87837 397375.00
3768389.00 0.68477
397425.00 3768389.00 0.53605 397475.00
3768389.00 0.42496
397525.00 3768389.00 0.34024 396425.00
3768439.00 0.23411
396475.00 3768439.00 0.29035 396525.00
3768439.00 0.38606
397175.00 3768439.00 1.09066 397225.00
3768439.00 1.01214
397275.00 3768439.00 0.86755 397325.00
3768439.00 0.74399
397375.00 3768439.00 0.61825 397425.00
3768439.00 0.50591
397475.00 3768439.00 0.39869 397525.00
3768439.00 0.32513
396425.00 3768489.00 0.21446 396475.00
3768489.00 0.26224
396525.00 3768489.00 0.33939 397075.00
3768489.00 1.03626
397125.00 3768489.00 0.92518 397175.00
3768489.00 0.83946
397225.00 3768489.00 0.77431 397275.00
3768489.00 0.71299
397325.00 3768489.00 0.63370 397375.00
3768489.00 0.53862
397425.00 3768489.00 0.45422 397475.00
3768489.00 0.38219
397525.00 3768489.00 0.31954 396425.00
3768539.00 0.19552
396475.00 3768539.00 0.23661 396525.00
3768539.00 0.29603
396575.00 3768539.00 0.39460 397025.00
3768539.00 0.88183
397075.00 3768539.00 0.80552 397125.00
3768539.00 0.73685
397175.00 3768539.00 0.68253 397225.00
3768539.00 0.62992
397275.00 3768539.00 0.59930 397325.00
3768539.00 0.53909
397375.00 3768539.00 0.46902 397425.00
3768539.00 0.40723

*** MODELOPTs: RegDFAULT CONC ELEV URBAN ADJ_U*

*** THE PERIOD (43848 HRS) AVERAGE CONCENTRATION VALUES FOR SOURCE GROUP: MISC2 ***
INCLUDING SOURCE(S): L0001870 , L0001871 , L0001872 , L0001873 , L0001874 , L0001875 , L0001876 , L0001877 , L0001878 , L0001879 , L0001880 , L0001881 , L0001882 , L0001883 , L0001884 , L0001885 , L0001886 , L0001887 , L0001888 , L0001889 , L0001890 , L0001891 , L0001892 , L0001893 , L0001894 , L0001895 , L0001896 , L0001897 , . . . ,

*** DISCRETE CARTESIAN RECEPTOR POINTS ***

** CONC OF PM_10 IN MICROGRAMS/M**3 **

X-COORD (M)	Y-COORD (M)	CONC	X-COORD (M)	Y-COORD (M)	CONC
397475.00	3768539.00	0.34949	397525.00	3768539.00	0.29880
396425.00	3768589.00	0.17919	396475.00	3768589.00	0.21222
396525.00	3768589.00	0.26281	396575.00	3768589.00	0.33043
396625.00	3768589.00	0.41880	396825.00	3768589.00	0.79173
396875.00	3768589.00	0.81436	396925.00	3768589.00	0.78173
396975.00	3768589.00	0.75243	397025.00	3768589.00	0.70632
397075.00	3768589.00	0.65144	397125.00	3768589.00	0.61312
397175.00	3768589.00	0.57297	397225.00	3768589.00	0.52946
397275.00	3768589.00	0.48685	397325.00	3768589.00	0.46034
397375.00	3768589.00	0.40891	397425.00	3768589.00	0.36505
397475.00	3768589.00	0.31897	397525.00	3768589.00	0.27742
396425.00	3768639.00	0.16349	396475.00	3768639.00	0.18919
396525.00	3768639.00	0.23049	396575.00	3768639.00	0.27852
396625.00	3768639.00	0.33763	396675.00	3768639.00	0.40720
396725.00	3768639.00	0.48020	396775.00	3768639.00	0.54149

396825.00	3768639.00	0.58919	396875.00	3768639.00	0.60740
396925.00	3768639.00	0.60403	396975.00	3768639.00	0.59297
397025.00	3768639.00	0.56816	397075.00	3768639.00	0.53368
397125.00	3768639.00	0.49503	397175.00	3768639.00	0.47887
397225.00	3768639.00	0.45085	397275.00	3768639.00	0.42299
397325.00	3768639.00	0.39574	397375.00	3768639.00	0.35766
397425.00	3768639.00	0.32280	397475.00	3768639.00	0.29075
397525.00	3768639.00	0.25669	396425.00	3768689.00	0.14870
396475.00	3768689.00	0.16892	396525.00	3768689.00	0.19723
396575.00	3768689.00	0.23406	396625.00	3768689.00	0.27406
396675.00	3768689.00	0.32145	396725.00	3768689.00	0.36659
396775.00	3768689.00	0.40960	396825.00	3768689.00	0.44365
396875.00	3768689.00	0.46702	396925.00	3768689.00	0.47407
396975.00	3768689.00	0.47081	397025.00	3768689.00	0.46093
397075.00	3768689.00	0.44754	397125.00	3768689.00	0.41790
397175.00	3768689.00	0.40610	397225.00	3768689.00	0.38988
397275.00	3768689.00	0.36734	397325.00	3768689.00	0.34410
397375.00	3768689.00	0.31825	397425.00	3768689.00	0.28969
397475.00	3768689.00	0.26173	397525.00	3768689.00	0.23496

*** MODELOPTs: RegDFAULT CONC ELEV URBAN ADJ_U*

*** THE PERIOD (43848 HRS) AVERAGE CONCENTRATION VALUES FOR SOURCE GROUP: MISC3 ***
INCLUDING SOURCE(S): L0001958 , L0001959 , L0001960 , L0001961 , L0001962 , L0001963 , L0001964 , L0001965 , L0001966 , L0001967 , L0001968 , L0001969 , L0001970 , L0001971 , L0001972 , L0001973 , L0001974 , L0001975 , L0001976 , L0001977 , L0001978 , L0001979 , L0001980 , L0001981 , L0001982 , L0001983 , L0001984 , L0001985 , . . . ,

*** DISCRETE CARTESIAN RECEPTOR POINTS ***

** CONC OF PM_10 IN MICROGRAMS/M**3 **

X-COORD (M)	Y-COORD (M)	CONC	X-COORD (M)	Y-COORD (M)	CONC
396166.28	3767377.28	0.10094	396266.28	3767377.28	0.11154
396366.28	3767377.28	0.12624	396466.28	3767377.28	0.13695
396566.28	3767377.28	0.14591	396666.28	3767377.28	0.14673
396766.28	3767377.28	0.13898	396866.28	3767377.28	0.13049
396966.28	3767377.28	0.12378	397066.28	3767377.28	0.10949
397166.28	3767377.28	0.09520	397266.28	3767377.28	0.08172
397366.28	3767377.28	0.06999	397466.28	3767377.28	0.05788
397566.28	3767377.28	0.05102	397666.28	3767377.28	0.04484
397766.28	3767377.28	0.04042	397866.28	3767377.28	0.03588
396166.28	3767477.28	0.12378	396266.28	3767477.28	0.14033
396366.28	3767477.28	0.16726	396466.28	3767477.28	0.19027
396566.28	3767477.28	0.20803	396666.28	3767477.28	0.21371
396766.28	3767477.28	0.20527	396866.28	3767477.28	0.18911
396966.28	3767477.28	0.17313	397066.28	3767477.28	0.14705
397166.28	3767477.28	0.12049	397266.28	3767477.28	0.09968

397366.28 3767477.28 0.08214 397466.28 3767477.28 0.06635
397566.28 3767477.28 0.05564 397666.28 3767477.28 0.04876
397766.28 3767477.28 0.04302 397866.28 3767477.28 0.03822
396166.28 3767577.28 0.14896 396266.28 3767577.28 0.18044
396366.28 3767577.28 0.22359 396466.28 3767577.28 0.27453
396566.28 3767577.28 0.32375 396666.28 3767577.28 0.35033
396766.28 3767577.28 0.33077 396866.28 3767577.28 0.30892
396966.28 3767577.28 0.26244 397066.28 3767577.28 0.20946
397166.28 3767577.28 0.15860 397266.28 3767577.28 0.12176
397366.28 3767577.28 0.09589 397466.28 3767577.28 0.07416
397566.28 3767577.28 0.06085 397666.28 3767577.28 0.05139
397766.28 3767577.28 0.04516 397866.28 3767577.28 0.03986
396166.28 3767677.28 0.18000 396266.28 3767677.28 0.23351
396366.28 3767677.28 0.31476 396466.28 3767677.28 0.43940
396566.28 3767677.28 0.56417 396666.28 3767677.28 0.63823
396766.28 3767677.28 0.67110 396866.28 3767677.28 0.63294
396966.28 3767677.28 0.49159 397066.28 3767677.28 0.32669
397166.28 3767677.28 0.21432 397266.28 3767677.28 0.14348
397366.28 3767677.28 0.10985 397466.28 3767677.28 0.07876
397566.28 3767677.28 0.06472 397666.28 3767677.28 0.05442
397766.28 3767677.28 0.04685 397866.28 3767677.28 0.04175
396166.28 3767777.28 0.21161 396266.28 3767777.28 0.30769
396366.28 3767777.28 0.44778 396466.28 3767777.28 0.70071
396566.28 3767777.28 1.12807 396666.28 3767777.28 1.85453
396766.28 3767777.28 2.23382 396866.28 3767777.28 2.12847

*** MODELOPTs: RegDFAULT CONC ELEV URBAN ADJ_U*

*** THE PERIOD (43848 HRS) AVERAGE CONCENTRATION VALUES FOR SOURCE GROUP: MISC3 ***
INCLUDING SOURCE(S): L0001958 , L0001959 , L0001960 , L0001961 , L0001962 , L0001963 , L0001964 , L0001965 , L0001966 , L0001967 , L0001968 , L0001969 , L0001970 , L0001971 , L0001972 , L0001973 , L0001974 , L0001975 , L0001976 , L0001977 , L0001978 , L0001979 , L0001980 , L0001981 , L0001982 , L0001983 , L0001984 , L0001985 , . . . ,

*** DISCRETE CARTESIAN RECEPTOR POINTS ***

** CONC OF PM_10 IN MICROGRAMS/M**3 **

X-COORD (M)	Y-COORD (M)	CONC	X-COORD (M)	Y-COORD (M)	CONC
396966.28	3767777.28	1.46332	397066.28	3767777.28	0.59869
397166.28	3767777.28	0.28877	397266.28	3767777.28	0.17113
397366.28	3767777.28	0.12257	397466.28	3767777.28	0.08503
397566.28	3767777.28	0.06733	397666.28	3767777.28	0.05756
397766.28	3767777.28	0.04787	397866.28	3767777.28	0.04172
396166.28	3767877.28	0.23836	396266.28	3767877.28	0.36402
396366.28	3767877.28	0.62948	396466.28	3767877.28	1.26986
396566.28	3767877.28	2.78539	397466.28	3767877.28	0.09966
397566.28	3767877.28	0.07125	397666.28	3767877.28	0.05596
397766.28	3767877.28	0.04691	397866.28	3767877.28	0.04414
396166.28	3767977.28	0.25627	396266.28	3767977.28	0.41099
396366.28	3767977.28	0.78461	396466.28	3767977.28	2.35187
397466.28	3767977.28	0.09891	397566.28	3767977.28	0.07372
397666.28	3767977.28	0.05861	397766.28	3767977.28	0.05479
397866.28	3767977.28	0.04889	396166.28	3768077.28	0.25452

396266.28	3768077.28	0.42723	396366.28	3768077.28	0.83934
396466.28	3768077.28	2.55292	397466.28	3768077.28	0.11255
397566.28	3768077.28	0.08984	397666.28	3768077.28	0.07197
397766.28	3768077.28	0.05832	397866.28	3768077.28	0.05104
396166.28	3768177.28	0.23679	396266.28	3768177.28	0.39982
396366.28	3768177.28	0.78786	396466.28	3768177.28	2.22095
397466.28	3768177.28	0.12646	397566.28	3768177.28	0.09959
397666.28	3768177.28	0.07958	397766.28	3768177.28	0.06437
397866.28	3768177.28	0.05416	396166.28	3768277.28	0.20517
396266.28	3768277.28	0.35614	396366.28	3768277.28	0.66706
396466.28	3768277.28	1.71479	397366.28	3768277.28	0.16338
397466.28	3768277.28	0.13025	397566.28	3768277.28	0.10258
397666.28	3768277.28	0.08300	397766.28	3768277.28	0.06768
397866.28	3768277.28	0.05663	396166.28	3768377.28	0.17371
396266.28	3768377.28	0.29527	396366.28	3768377.28	0.51094
396466.28	3768377.28	1.08662	397266.28	3768377.28	0.20041
397366.28	3768377.28	0.15809	397466.28	3768377.28	0.12667
397566.28	3768377.28	0.10114	397666.28	3768377.28	0.08348
397766.28	3768377.28	0.06985	397866.28	3768377.28	0.05797
396166.28	3768477.28	0.15000	396266.28	3768477.28	0.22996
396366.28	3768477.28	0.35981	396466.28	3768477.28	0.64317
397166.28	3768477.28	0.24289	397266.28	3768477.28	0.18583
397366.28	3768477.28	0.14417	397466.28	3768477.28	0.11376
397566.28	3768477.28	0.10094	397666.28	3768477.28	0.08429
397766.28	3768477.28	0.06835	397866.28	3768477.28	0.05972

*** MODELOPTs: RegDFAULT CONC ELEV URBAN ADJ_U*

*** THE PERIOD (43848 HRS) AVERAGE CONCENTRATION VALUES FOR SOURCE GROUP: MISC3 ***
INCLUDING SOURCE(S): L0001958 , L0001959 , L0001960 , L0001961 , L0001962 , L0001963 , L0001964 , L0001965 , L0001966 , L0001967 , L0001968 , L0001969 , L0001970 , L0001971 , L0001972 , L0001973 , L0001974 , L0001975 , L0001976 , L0001977 , L0001978 , L0001979 , L0001980 , L0001981 , L0001982 , L0001983 , L0001984 , L0001985 , . . . ,

*** DISCRETE CARTESIAN RECEPTOR POINTS ***

** CONC OF PM_10 IN MICROGRAMS/M**3 **

X-COORD (M)	Y-COORD (M)	CONC	X-COORD (M)	Y-COORD (M)	CONC
396166.28	3768577.28	0.14249	396266.28	3768577.28	0.17372
396366.28	3768577.28	0.25112	396466.28	3768577.28	0.40103
396566.28	3768577.28	0.59042	396866.28	3768577.28	0.45160
396966.28	3768577.28	0.34308	397066.28	3768577.28	0.26965
397166.28	3768577.28	0.21702	397266.28	3768577.28	0.17554
397366.28	3768577.28	0.13829	397466.28	3768577.28	0.10760
397566.28	3768577.28	0.09404	397666.28	3768577.28	0.08201
397766.28	3768577.28	0.07032	397866.28	3768577.28	0.06007
396166.28	3768677.28	0.12112	396266.28	3768677.28	0.15478
396366.28	3768677.28	0.19211	396466.28	3768677.28	0.27192
396566.28	3768677.28	0.35362	396666.28	3768677.28	0.41107
396766.28	3768677.28	0.39668	396866.28	3768677.28	0.33957
396966.28	3768677.28	0.27997	397066.28	3768677.28	0.23103
397166.28	3768677.28	0.19145	397366.28	3768677.28	0.13173
397466.28	3768677.28	0.10890	397566.28	3768677.28	0.09131

397666.28 3768677.28 0.07923 397766.28
3768677.28 0.06918
397866.28 3768677.28 0.05968 396166.28
3768777.28 0.10269
396266.28 3768777.28 0.12729 396366.28
3768777.28 0.15136
396466.28 3768777.28 0.19621 396566.28
3768777.28 0.24337
396666.28 3768777.28 0.27457 396766.28
3768777.28 0.27802
396866.28 3768777.28 0.25648 396966.28
3768777.28 0.22493
397066.28 3768777.28 0.19413 397166.28
3768777.28 0.16623
397266.28 3768777.28 0.14295 397366.28
3768777.28 0.12221
397466.28 3768777.28 0.10451 397566.28
3768777.28 0.08969
397666.28 3768777.28 0.07737 397766.28
3768777.28 0.06705
397866.28 3768777.28 0.05850 396166.28
3768877.28 0.08896
396266.28 3768877.28 0.10573 396366.28
3768877.28 0.12785
396466.28 3768877.28 0.14965 396566.28
3768877.28 0.17918
396666.28 3768877.28 0.19939 396766.28
3768877.28 0.20619
396866.28 3768877.28 0.19968 396966.28
3768877.28 0.18352
397066.28 3768877.28 0.16302 397166.28
3768877.28 0.14371
397266.28 3768877.28 0.12645 397366.28
3768877.28 0.11025
397466.28 3768877.28 0.09611 397566.28
3768877.28 0.08383
397666.28 3768877.28 0.07308 397766.28
3768877.28 0.06410
397866.28 3768877.28 0.05664 396425.00
3767739.00 0.50367
396475.00 3767739.00 0.61047 396525.00
3767739.00 0.72259
396575.00 3767739.00 0.88726 396625.00
3767739.00 1.00189
396675.00 3767739.00 1.13324 396725.00
3767739.00 1.30164
396775.00 3767739.00 1.24780 396825.00
3767739.00 1.25047
396875.00 3767739.00 1.18533 396925.00
3767739.00 1.02840

*** MODELOPTs: RegDFAULT CONC ELEV URBAN ADJ_U*

*** THE PERIOD (43848 HRS) AVERAGE CONCENTRATION VALUES FOR SOURCE GROUP: MISC3 ***
INCLUDING SOURCE(S): L0001958 , L0001959 , L0001960 , L0001961 , L0001962 , L0001963 , L0001964 , L0001965 , L0001966 , L0001967 , L0001968 , L0001969 , L0001970 , L0001971 , L0001972 , L0001973 , L0001974 , L0001975 , L0001976 , L0001977 , L0001978 , L0001979 , L0001980 , L0001981 , L0001982 , L0001983 , L0001984 , L0001985 , . . . ,

*** DISCRETE CARTESIAN RECEPTOR POINTS ***

** CONC OF PM_10 IN MICROGRAMS/M**3 **

X-COORD (M)	Y-COORD (M)	CONC	X-COORD (M)	Y-COORD (M)	CONC
396975.00	3767739.00	0.82451	397025.00	3767739.00	0.60978
397075.00	3767739.00	0.43721	397125.00	3767739.00	0.32214
397175.00	3767739.00	0.24702	397225.00	3767739.00	0.19630
397275.00	3767739.00	0.15569	397325.00	3767739.00	0.13328
397375.00	3767739.00	0.11556	397425.00	3767739.00	0.10049
397475.00	3767739.00	0.08121	397525.00	3767739.00	0.07236
396425.00	3767789.00	0.62291	396475.00	3767789.00	0.77615
396525.00	3767789.00	0.99756	396575.00	3767789.00	1.28914
396625.00	3767789.00	1.76592	396675.00	3767789.00	2.37132
396725.00	3767789.00	2.80389	396775.00	3767789.00	2.75863
396825.00	3767789.00	2.78568	396875.00	3767789.00	2.60969
396925.00	3767789.00	2.24586	396975.00	3767789.00	1.69795
397025.00	3767789.00	1.02360	397075.00	3767789.00	0.59745
397125.00	3767789.00	0.39217	397175.00	3767789.00	0.28364
397225.00	3767789.00	0.21815	397275.00	3767789.00	0.16872

397325.00 3767789.00 0.13882 397375.00
3767789.00 0.12137
397425.00 3767789.00 0.10542 397475.00
3767789.00 0.08380
397525.00 3767789.00 0.07491 396425.00
3767839.00 0.77975
396475.00 3767839.00 1.05113 396525.00
3767839.00 1.41025
396575.00 3767839.00 2.08912 396625.00
3767839.00 4.10342
396675.00 3767839.00 7.22343 396725.00
3767839.00 5.56971
396775.00 3767839.00 8.56649 396825.00
3767839.00 5.35065
396875.00 3767839.00 7.96082 396925.00
3767839.00 4.45112
396975.00 3767839.00 5.11494 397025.00
3767839.00 2.30493
397075.00 3767839.00 0.81866 397125.00
3767839.00 0.47037
397175.00 3767839.00 0.32187 397225.00
3767839.00 0.23136
397275.00 3767839.00 0.17462 397325.00
3767839.00 0.13991
397375.00 3767839.00 0.12445 397475.00
3767839.00 0.09471
397525.00 3767839.00 0.07695 396425.00
3767889.00 0.98179
396475.00 3767889.00 1.45685 396525.00
3767889.00 2.24769
396575.00 3767889.00 3.57448 397475.00
3767889.00 0.09351
397525.00 3767889.00 0.07881 396425.00
3767939.00 1.20368
396475.00 3767939.00 2.16086 396525.00
3767939.00 5.82752
397475.00 3767939.00 0.09353 397525.00
3767939.00 0.08086
396425.00 3767989.00 1.40577 396475.00
3767989.00 2.85588
397475.00 3767989.00 0.09608 397525.00
3767989.00 0.08321
396425.00 3768039.00 1.47576 396475.00
3768039.00 3.07649
397475.00 3768039.00 0.10466 397525.00
3768039.00 0.09330
396425.00 3768089.00 1.45594 396475.00
3768089.00 2.90156
397475.00 3768089.00 0.11095 397525.00
3768089.00 0.10081

*** MODELOPTs: RegDFAULT CONC ELEV URBAN ADJ_U*

*** THE PERIOD (43848 HRS) AVERAGE CONCENTRATION VALUES FOR SOURCE GROUP: MISC3 ***
INCLUDING SOURCE(S): L0001958 , L0001959 , L0001960 , L0001961 , L0001962 , L0001963 , L0001964 , L0001965 , L0001966 , L0001967 , L0001968 , L0001969 , L0001970 , L0001971 , L0001972 , L0001973 , L0001974 , L0001975 , L0001976 , L0001977 , L0001978 , L0001979 , L0001980 , L0001981 , L0001982 , L0001983 , L0001984 , L0001985 , . . . ,

*** DISCRETE CARTESIAN RECEPTOR POINTS ***

** CONC OF PM_10 IN MICROGRAMS/M**3 **

X-COORD (M)	Y-COORD (M)	CONC	X-COORD (M)	Y-COORD (M)	CONC
396425.00	3768139.00	1.42599	396475.00	3768139.00	2.67599
397425.00	3768139.00	0.13664	397475.00	3768139.00	0.11996
397525.00	3768139.00	0.10643	396425.00	3768189.00	1.35210
396475.00	3768189.00	2.48934	397375.00	3768189.00	0.16233
397425.00	3768189.00	0.14498	397475.00	3768189.00	0.12434
397525.00	3768189.00	0.10987	396425.00	3768239.00	1.23069
396475.00	3768239.00	2.21934	397375.00	3768239.00	0.16074
397425.00	3768239.00	0.14721	397475.00	3768239.00	0.12912
397525.00	3768239.00	0.11366	396425.00	3768289.00	1.06210
396475.00	3768289.00	1.82738	397325.00	3768289.00	0.18234
397375.00	3768289.00	0.16013	397425.00	3768289.00	0.14034
397475.00	3768289.00	0.12528	397525.00	3768289.00	0.11273
396425.00	3768339.00	0.89927	396475.00	3768339.00	1.43605
396525.00	3768339.00	2.89642	397275.00	3768339.00	0.20249
397325.00	3768339.00	0.17752	397375.00	3768339.00	0.15778

397425.00 3768339.00 0.13922 397475.00
3768339.00 0.12383
397525.00 3768339.00 0.11055 396425.00
3768389.00 0.73494
396475.00 3768389.00 1.09762 396525.00
3768389.00 1.87438
397225.00 3768389.00 0.22090 397275.00
3768389.00 0.19443
397325.00 3768389.00 0.17190 397375.00
3768389.00 0.15422
397425.00 3768389.00 0.13835 397475.00
3768389.00 0.12392
397525.00 3768389.00 0.11153 396425.00
3768439.00 0.59624
396475.00 3768439.00 0.83413 396525.00
3768439.00 1.23586
397175.00 3768439.00 0.24705 397225.00
3768439.00 0.21154
397275.00 3768439.00 0.18774 397325.00
3768439.00 0.16406
397375.00 3768439.00 0.14475 397425.00
3768439.00 0.12873
397475.00 3768439.00 0.12162 397525.00
3768439.00 0.11048
396425.00 3768489.00 0.48106 396475.00
3768489.00 0.63609
396525.00 3768489.00 0.85924 397075.00
3768489.00 0.29753
397125.00 3768489.00 0.26389 397175.00
3768489.00 0.23480
397225.00 3768489.00 0.20763 397275.00
3768489.00 0.18049
397325.00 3768489.00 0.15653 397375.00
3768489.00 0.14012
397425.00 3768489.00 0.12512 397475.00
3768489.00 0.11028
397525.00 3768489.00 0.10080 396425.00
3768539.00 0.39192
396475.00 3768539.00 0.49610 396525.00
3768539.00 0.62731
396575.00 3768539.00 0.78948 397025.00
3768539.00 0.31406
397075.00 3768539.00 0.27860 397125.00
3768539.00 0.24843
397175.00 3768539.00 0.22254 397225.00
3768539.00 0.19903
397275.00 3768539.00 0.17319 397325.00
3768539.00 0.15202
397375.00 3768539.00 0.13708 397425.00
3768539.00 0.12094

*** MODELOPTs: RegDFAULT CONC ELEV URBAN ADJ_U*

*** THE PERIOD (43848 HRS) AVERAGE CONCENTRATION VALUES FOR SOURCE GROUP: MISC3 ***
INCLUDING SOURCE(S): L0001958 , L0001959 , L0001960 , L0001961 , L0001962 , L0001963 , L0001964 , L0001965 , L0001966 , L0001967 , L0001968 , L0001969 , L0001970 , L0001971 , L0001972 , L0001973 , L0001974 , L0001975 , L0001976 , L0001977 , L0001978 , L0001979 , L0001980 , L0001981 , L0001982 , L0001983 , L0001984 , L0001985 , . . . ,

*** DISCRETE CARTESIAN RECEPTOR POINTS ***

** CONC OF PM_10 IN MICROGRAMS/M**3 **

X-COORD (M)	Y-COORD (M)	CONC	X-COORD (M)	Y-COORD (M)	CONC
397475.00	3768539.00	0.10798	397525.00	3768539.00	0.09769
396425.00	3768589.00	0.32104	396475.00	3768589.00	0.39478
396525.00	3768589.00	0.47729	396575.00	3768589.00	0.56517
396625.00	3768589.00	0.63586	396825.00	3768589.00	0.49191
396875.00	3768589.00	0.42727	396925.00	3768589.00	0.37212
396975.00	3768589.00	0.32857	397025.00	3768589.00	0.29166
397075.00	3768589.00	0.26013	397125.00	3768589.00	0.23369
397175.00	3768589.00	0.21014	397225.00	3768589.00	0.18937
397275.00	3768589.00	0.17087	397325.00	3768589.00	0.14928
397375.00	3768589.00	0.13511	397425.00	3768589.00	0.11710
397475.00	3768589.00	0.10500	397525.00	3768589.00	0.09547
396425.00	3768639.00	0.26457	396475.00	3768639.00	0.32167
396525.00	3768639.00	0.37182	396575.00	3768639.00	0.42913
396625.00	3768639.00	0.47573	396675.00	3768639.00	0.49715
396725.00	3768639.00	0.48887	396775.00	3768639.00	0.45812

396825.00	3768639.00	0.41651	396875.00	3768639.00	0.37311
396925.00	3768639.00	0.33310	396975.00	3768639.00	0.29854
397025.00	3768639.00	0.26827	397075.00	3768639.00	0.24115
397125.00	3768639.00	0.21682	397175.00	3768639.00	0.19804
397225.00	3768639.00	0.17980	397275.00	3768639.00	0.16293
397325.00	3768639.00	0.14623	397375.00	3768639.00	0.13299
397425.00	3768639.00	0.11956	397475.00	3768639.00	0.10231
397525.00	3768639.00	0.09355	396425.00	3768689.00	0.22268
396475.00	3768689.00	0.26795	396525.00	3768689.00	0.30660
396575.00	3768689.00	0.34339	396625.00	3768689.00	0.37478
396675.00	3768689.00	0.39188	396725.00	3768689.00	0.39127
396775.00	3768689.00	0.37581	396825.00	3768689.00	0.35140
396875.00	3768689.00	0.32360	396925.00	3768689.00	0.29517
396975.00	3768689.00	0.26850	397025.00	3768689.00	0.24445
397075.00	3768689.00	0.22300	397125.00	3768689.00	0.20180
397175.00	3768689.00	0.18556	397225.00	3768689.00	0.16993
397275.00	3768689.00	0.15509	397325.00	3768689.00	0.14120
397375.00	3768689.00	0.12822	397425.00	3768689.00	0.11674
397475.00	3768689.00	0.10626	397525.00	3768689.00	0.09705

*** MODELOPTs: RegDFAULT CONC ELEV URBAN ADJ_U*

*** THE PERIOD (43848 HRS) AVERAGE CONCENTRATION VALUES FOR SOURCE GROUP: MISC4 ***
INCLUDING SOURCE(S): L0002017 , L0002018 , L0002019 , L0002020 , L0002021 , L0002022 , L0002023 , L0002024 , L0002025 , L0002026 , L0002027 , L0002028 , L0002029 , L0002030 , L0002031 , L0002032 , L0002033 , L0002034 , L0002035 , L0002036 , L0002037 , L0002038 , L0002039 , L0002040 , L0002041 ,

*** DISCRETE CARTESIAN RECEPTOR POINTS ***

** CONC OF PM_10 IN MICROGRAMS/M**3 **

X-COORD (M)	Y-COORD (M)	CONC	X-COORD (M)	Y-COORD (M)	CONC
396166.28	3767377.28	0.04350	396266.28	3767377.28	0.04402
396366.28	3767377.28	0.04550	396466.28	3767377.28	0.04594
396566.28	3767377.28	0.04669	396666.28	3767377.28	0.04596
396766.28	3767377.28	0.04465	396866.28	3767377.28	0.04401
396966.28	3767377.28	0.04442	397066.28	3767377.28	0.04390
397166.28	3767377.28	0.04235	397266.28	3767377.28	0.04019
397366.28	3767377.28	0.03864	397466.28	3767377.28	0.03683
397566.28	3767377.28	0.03466	397666.28	3767377.28	0.03250
397766.28	3767377.28	0.03001	397866.28	3767377.28	0.02793
396166.28	3767477.28	0.05039	396266.28	3767477.28	0.05090
396366.28	3767477.28	0.05338	396466.28	3767477.28	0.05453
396566.28	3767477.28	0.05480	396666.28	3767477.28	0.05398
396766.28	3767477.28	0.05282	396866.28	3767477.28	0.05190
396966.28	3767477.28	0.05202	397066.28	3767477.28	0.05121
397166.28	3767477.28	0.04921	397266.28	3767477.28	0.04646
397366.28	3767477.28	0.04388	397466.28		

3767477.28 0.04150
397566.28 3767477.28 0.03870 397666.28
3767477.28 0.03590
397766.28 3767477.28 0.03320 397866.28
3767477.28 0.03068
396166.28 3767577.28 0.05761 396266.28
3767577.28 0.05987
396366.28 3767577.28 0.06257 396466.28
3767577.28 0.06478
396566.28 3767577.28 0.06610 396666.28
3767577.28 0.06625
396766.28 3767577.28 0.06311 396866.28
3767577.28 0.06290
396966.28 3767577.28 0.06188 397066.28
3767577.28 0.06030
397166.28 3767577.28 0.05787 397266.28
3767577.28 0.05429
397366.28 3767577.28 0.05050 397466.28
3767577.28 0.04716
397566.28 3767577.28 0.04339 397666.28
3767577.28 0.03983
397766.28 3767577.28 0.03652 397866.28
3767577.28 0.03346
396166.28 3767677.28 0.06698 396266.28
3767677.28 0.07121
396366.28 3767677.28 0.07594 396466.28
3767677.28 0.07987
396566.28 3767677.28 0.08138 396666.28
3767677.28 0.07921
396766.28 3767677.28 0.07908 396866.28
3767677.28 0.07925
396966.28 3767677.28 0.07761 397066.28
3767677.28 0.07362
397166.28 3767677.28 0.06928 397266.28
3767677.28 0.06463
397366.28 3767677.28 0.05898 397466.28
3767677.28 0.05252
397566.28 3767677.28 0.04842 397666.28
3767677.28 0.04425
397766.28 3767677.28 0.04013 397866.28
3767677.28 0.03639
396166.28 3767777.28 0.07751 396266.28
3767777.28 0.08638
396366.28 3767777.28 0.09346 396466.28
3767777.28 0.09930
396566.28 3767777.28 0.10096 396666.28
3767777.28 0.10156
396766.28 3767777.28 0.10322 396866.28
3767777.28 0.10254

*** MODELOPTs: RegDFAULT CONC ELEV URBAN ADJ_U*

*** THE PERIOD (43848 HRS) AVERAGE CONCENTRATION VALUES FOR SOURCE GROUP: MISC4 ***
INCLUDING SOURCE(S): L0002017 , L0002018 , L0002019 , L0002020 , L0002021 , L0002022 , L0002023 , L0002024 , L0002025 , L0002026 , L0002027 , L0002028 , L0002029 , L0002030 , L0002031 , L0002032 , L0002033 , L0002034 , L0002035 , L0002036 , L0002037 , L0002038 , L0002039 , L0002040 , L0002041 ,

*** DISCRETE CARTESIAN RECEPTOR POINTS ***

** CONC OF PM_10 IN MICROGRAMS/M**3 **

X-COORD (M)	Y-COORD (M)	CONC	X-COORD (M)	Y-COORD (M)	CONC
396966.28	3767777.28	0.09849	397066.28	3767777.28	0.09259
397166.28	3767777.28	0.08516	397266.28	3767777.28	0.07751
397366.28	3767777.28	0.06975	397466.28	3767777.28	0.05943
397566.28	3767777.28	0.05295	397666.28	3767777.28	0.04900
397766.28	3767777.28	0.04334	397866.28	3767777.28	0.03955
396166.28	3767877.28	0.08942	396266.28	3767877.28	0.10328
396366.28	3767877.28	0.11647	396466.28	3767877.28	0.12637
396566.28	3767877.28	0.13197	397466.28	3767877.28	0.07223
397566.28	3767877.28	0.05863	397666.28	3767877.28	0.04987
397766.28	3767877.28	0.04424	397866.28	3767877.28	0.04294
396166.28	3767977.28	0.10166	396266.28	3767977.28	0.12292
396366.28	3767977.28	0.14538	396466.28	3767977.28	0.16439
397466.28	3767977.28	0.07541	397566.28	3767977.28	0.06268
397666.28	3767977.28	0.05384	397766.28	3767977.28	0.05309
397866.28	3767977.28	0.04616	396166.28	3768077.28	0.11700
396266.28	3768077.28	0.14520	396366.28		

3768077.28 0.18221
396466.28 3768077.28 0.22402 397466.28
3768077.28 0.09134
397566.28 3768077.28 0.08057 397666.28
3768077.28 0.06807
397766.28 3768077.28 0.05785 397866.28
3768077.28 0.04976
396166.28 3768177.28 0.13033 396266.28
3768177.28 0.17134
396366.28 3768177.28 0.23151 396466.28
3768177.28 0.30983
397466.28 3768177.28 0.11437 397566.28
3768177.28 0.09132
397666.28 3768177.28 0.07441 397766.28
3768177.28 0.06243
397866.28 3768177.28 0.05250 396166.28
3768277.28 0.14230
396266.28 3768277.28 0.19231 396366.28
3768277.28 0.28030
396466.28 3768277.28 0.42808 397366.28
3768277.28 0.17146
397466.28 3768277.28 0.13098 397566.28
3768277.28 0.10141
397666.28 3768277.28 0.08032 397766.28
3768277.28 0.06564
397866.28 3768277.28 0.05559 396166.28
3768377.28 0.14155
396266.28 3768377.28 0.20700 396366.28
3768377.28 0.31816
396466.28 3768377.28 0.55487 397266.28
3768377.28 0.29943
397366.28 3768377.28 0.20509 397466.28
3768377.28 0.14779
397566.28 3768377.28 0.11164 397666.28
3768377.28 0.08766
397766.28 3768377.28 0.07065 397866.28
3768377.28 0.05925
396166.28 3768477.28 0.13747 396266.28
3768477.28 0.20388
396366.28 3768477.28 0.31925 396466.28
3768477.28 0.59348
397166.28 3768477.28 0.68791 397266.28
3768477.28 0.37134
397366.28 3768477.28 0.21886 397466.28
3768477.28 0.14669
397566.28 3768477.28 0.12158 397666.28
3768477.28 0.09358
397766.28 3768477.28 0.07558 397866.28
3768477.28 0.06201

*** MODELOPTs: RegDFAULT CONC ELEV URBAN ADJ_U*

*** THE PERIOD (43848 HRS) AVERAGE CONCENTRATION VALUES FOR SOURCE GROUP: MISC4 ***
INCLUDING SOURCE(S): L0002017 , L0002018 , L0002019 , L0002020 , L0002021 , L0002022 , L0002023 , L0002024 , L0002025 , L0002026 , L0002027 , L0002028 , L0002029 , L0002030 , L0002031 , L0002032 , L0002033 , L0002034 , L0002035 , L0002036 , L0002037 , L0002038 , L0002039 , L0002040 , L0002041 ,

*** DISCRETE CARTESIAN RECEPTOR POINTS ***

** CONC OF PM_10 IN MICROGRAMS/M**3 **

X-COORD (M)	Y-COORD (M)	CONC	X-COORD (M)	Y-COORD (M)	CONC
396166.28	3768577.28	0.14061	396266.28	3768577.28	0.18261
396366.28	3768577.28	0.28002	396466.28	3768577.28	0.51895
396566.28	3768577.28	1.08417	396866.28	3768577.28	13.81190
396966.28	3768577.28	7.28878	397066.28	3768577.28	2.02440
397166.28	3768577.28	0.85629	397266.28	3768577.28	0.45111
397366.28	3768577.28	0.26784	397466.28	3768577.28	0.16270
397566.28	3768577.28	0.12975	397666.28	3768577.28	0.10178
397766.28	3768577.28	0.07978	397866.28	3768577.28	0.06494
396166.28	3768677.28	0.13042	396266.28	3768677.28	0.17930
396366.28	3768677.28	0.24293	396466.28	3768677.28	0.41063
396566.28	3768677.28	0.71027	396666.28	3768677.28	1.33299
396766.28	3768677.28	2.24130	396866.28	3768677.28	3.07656
396966.28	3768677.28	2.67756	397066.28	3768677.28	1.56866
397166.28	3768677.28	0.83575	397366.28	3768677.28	0.30680
397466.28	3768677.28	0.20529	397566.28	3768677.28	0.14643
397666.28	3768677.28	0.11077	397766.28		

3768677.28 0.08591
397866.28 3768677.28 0.06909 396166.28
3768777.28 0.11932
396266.28 3768777.28 0.15727 396366.28
3768777.28 0.20624
396466.28 3768777.28 0.31419 396566.28
3768777.28 0.48458
396666.28 3768777.28 0.75069 396766.28
3768777.28 1.09791
396866.28 3768777.28 1.37511 396966.28
3768777.28 1.33916
397066.28 3768777.28 1.02768 397166.28
3768777.28 0.68595
397266.28 3768777.28 0.46140 397366.28
3768777.28 0.31034
397466.28 3768777.28 0.21556 397566.28
3768777.28 0.15618
397666.28 3768777.28 0.11765 397766.28
3768777.28 0.09142
397866.28 3768777.28 0.07331 396166.28
3768877.28 0.10577
396266.28 3768877.28 0.13667 396366.28
3768877.28 0.17970
396466.28 3768877.28 0.24467 396566.28
3768877.28 0.34972
396666.28 3768877.28 0.48337 396766.28
3768877.28 0.64818
396866.28 3768877.28 0.80661 396966.28
3768877.28 0.81876
397066.28 3768877.28 0.69006 397166.28
3768877.28 0.52959
397266.28 3768877.28 0.39403 397366.28
3768877.28 0.28552
397466.28 3768877.28 0.21041 397566.28
3768877.28 0.15814
397666.28 3768877.28 0.12071 397766.28
3768877.28 0.09491
397866.28 3768877.28 0.07679 396425.00
3767739.00 0.08970
396475.00 3767739.00 0.09170 396525.00
3767739.00 0.09227
396575.00 3767739.00 0.09339 396625.00
3767739.00 0.09171
396675.00 3767739.00 0.09167 396725.00
3767739.00 0.09355
396775.00 3767739.00 0.09232 396825.00
3767739.00 0.09278
396875.00 3767739.00 0.09264 396925.00
3767739.00 0.09124

*** MODELOPTs: RegDFAULT CONC ELEV URBAN ADJ_U*

*** THE PERIOD (43848 HRS) AVERAGE CONCENTRATION VALUES FOR SOURCE GROUP: MISC4 ***
INCLUDING SOURCE(S): L0002017 , L0002018 , L0002019 , L0002020 , L0002021 , L0002022 , L0002023 , L0002024 , L0002025 , L0002026 , L0002027 , L0002028 , L0002029 , L0002030 , L0002031 , L0002032 , L0002033 , L0002034 , L0002035 , L0002036 , L0002037 , L0002038 , L0002039 , L0002040 , L0002041 ,

*** DISCRETE CARTESIAN RECEPTOR POINTS ***

** CONC OF PM_10 IN MICROGRAMS/M**3 **

X-COORD (M)	Y-COORD (M)	CONC	X-COORD (M)	Y-COORD (M)	CONC
396975.00	3767739.00	0.08933	397025.00	3767739.00	0.08689
397075.00	3767739.00	0.08396	397125.00	3767739.00	0.08087
397175.00	3767739.00	0.07787	397225.00	3767739.00	0.07475
397275.00	3767739.00	0.07160	397325.00	3767739.00	0.06822
397375.00	3767739.00	0.06470	397425.00	3767739.00	0.06141
397475.00	3767739.00	0.05630	397525.00	3767739.00	0.05338
396425.00	3767789.00	0.10017	396475.00	3767789.00	0.10236
396525.00	3767789.00	0.10339	396575.00	3767789.00	0.10368
396625.00	3767789.00	0.10428	396675.00	3767789.00	0.10516
396725.00	3767789.00	0.10707	396775.00	3767789.00	0.10659
396825.00	3767789.00	0.10654	396875.00	3767789.00	0.10552
396925.00	3767789.00	0.10364	396975.00	3767789.00	0.10087
397025.00	3767789.00	0.09792	397075.00	3767789.00	0.09463
397125.00	3767789.00	0.09066	397175.00	3767789.00	0.08667
397225.00	3767789.00	0.08262	397275.00	3767789.00	0.07857
397325.00	3767789.00	0.07439	397375.00		

3767789.00 0.07043
397425.00 3767789.00 0.06640 397475.00
3767789.00 0.05966
397525.00 3767789.00 0.05663 396425.00
3767839.00 0.11245
396475.00 3767839.00 0.11607 396525.00
3767839.00 0.11672
396575.00 3767839.00 0.11854 396625.00
3767839.00 0.11989
396675.00 3767839.00 0.12363 396725.00
3767839.00 0.12436
396775.00 3767839.00 0.12404 396825.00
3767839.00 0.12316
396875.00 3767839.00 0.12152 396925.00
3767839.00 0.11886
396975.00 3767839.00 0.11254 397025.00
3767839.00 0.10594
397075.00 3767839.00 0.10708 397125.00
3767839.00 0.10202
397175.00 3767839.00 0.09720 397225.00
3767839.00 0.09107
397275.00 3767839.00 0.08288 397325.00
3767839.00 0.07688
397375.00 3767839.00 0.07652 397475.00
3767839.00 0.06750
397525.00 3767839.00 0.05957 396425.00
3767889.00 0.12679
396475.00 3767889.00 0.12981 396525.00
3767889.00 0.13379
396575.00 3767889.00 0.13799 397475.00
3767889.00 0.06972
397525.00 3767889.00 0.06257 396425.00
3767939.00 0.14370
396475.00 3767939.00 0.14866 396525.00
3767939.00 0.15530
397475.00 3767939.00 0.07109 397525.00
3767939.00 0.06531
396425.00 3767989.00 0.16179 396475.00
3767989.00 0.17190
397475.00 3767989.00 0.07433 397525.00
3767989.00 0.06819
396425.00 3768039.00 0.18509 396475.00
3768039.00 0.20079
397475.00 3768039.00 0.08343 397525.00
3768039.00 0.07888
396425.00 3768089.00 0.21321 396475.00
3768089.00 0.23655
397475.00 3768089.00 0.09169 397525.00
3768089.00 0.08820

*** MODELOPTs: RegDFAULT CONC ELEV URBAN ADJ_U*

*** THE PERIOD (43848 HRS) AVERAGE CONCENTRATION VALUES FOR SOURCE GROUP: MISC4 ***
INCLUDING SOURCE(S): L0002017 , L0002018 , L0002019 , L0002020 , L0002021 , L0002022 , L0002023 , L0002024 , L0002025 , L0002026 , L0002027 , L0002028 , L0002029 , L0002030 , L0002031 , L0002032 , L0002033 , L0002034 , L0002035 , L0002036 , L0002037 , L0002038 , L0002039 , L0002040 , L0002041 ,

*** DISCRETE CARTESIAN RECEPTOR POINTS ***

** CONC OF PM_10 IN MICROGRAMS/M**3 **

X-COORD (M)	Y-COORD (M)	CONC	X-COORD (M)	Y-COORD (M)	CONC
396425.00	3768139.00	0.24993	396475.00	3768139.00	0.27892
397425.00	3768139.00	0.11456	397475.00	3768139.00	0.10531
397525.00	3768139.00	0.09538	396425.00	3768189.00	0.28721
396475.00	3768189.00	0.33044	397375.00	3768189.00	0.14323
397425.00	3768189.00	0.12885	397475.00	3768189.00	0.11404
397525.00	3768189.00	0.10157	396425.00	3768239.00	0.32816
396475.00	3768239.00	0.39177	397375.00	3768239.00	0.15557
397425.00	3768239.00	0.13806	397475.00	3768239.00	0.12046
397525.00	3768239.00	0.10647	396425.00	3768289.00	0.36875
396475.00	3768289.00	0.46195	397325.00	3768289.00	0.20058
397375.00	3768289.00	0.17240	397425.00	3768289.00	0.14889
397475.00	3768289.00	0.12994	397525.00	3768289.00	0.11376
396425.00	3768339.00	0.41047	396475.00	3768339.00	0.53557
396525.00	3768339.00	0.73633	397275.00	3768339.00	0.26808
397325.00	3768339.00	0.22019	397375.00	3768339.00	0.18798
397425.00	3768339.00	0.15958	397475.00		

3768339.00 0.13751
397525.00 3768339.00 0.11990 396425.00
3768389.00 0.43942
396475.00 3768389.00 0.59745 396525.00
3768389.00 0.87918
397225.00 3768389.00 0.37752 397275.00
3768389.00 0.29536
397325.00 3768389.00 0.23951 397375.00
3768389.00 0.20232
397425.00 3768389.00 0.17082 397475.00
3768389.00 0.14575
397525.00 3768389.00 0.12590 396425.00
3768439.00 0.45700
396475.00 3768439.00 0.63214 396525.00
3768439.00 0.96494
397175.00 3768439.00 0.59219 397225.00
3768439.00 0.42732
397275.00 3768439.00 0.32916 397325.00
3768439.00 0.25197
397375.00 3768439.00 0.20145 397425.00
3768439.00 0.16673
397475.00 3768439.00 0.15384 397525.00
3768439.00 0.13200
396425.00 3768489.00 0.45021 396475.00
3768489.00 0.62607
396525.00 3768489.00 0.95438 397075.00
3768489.00 1.58155
397125.00 3768489.00 0.96775 397175.00
3768489.00 0.66873
397225.00 3768489.00 0.49155 397275.00
3768489.00 0.36306
397325.00 3768489.00 0.26482 397375.00
3768489.00 0.21423
397425.00 3768489.00 0.17565 397475.00
3768489.00 0.14215
397525.00 3768489.00 0.12506 396425.00
3768539.00 0.42839
396475.00 3768539.00 0.59038 396525.00
3768539.00 0.86527
396575.00 3768539.00 1.41117 397025.00
3768539.00 3.49165
397075.00 3768539.00 1.80571 397125.00
3768539.00 1.09800
397175.00 3768539.00 0.74955 397225.00
3768539.00 0.54009
397275.00 3768539.00 0.39957 397325.00
3768539.00 0.29313
397375.00 3768539.00 0.23588 397425.00
3768539.00 0.18457

*** MODELOPTs: RegDFAULT CONC ELEV URBAN ADJ_U*

*** THE PERIOD (43848 HRS) AVERAGE CONCENTRATION VALUES FOR SOURCE GROUP: MISC4 ***
INCLUDING SOURCE(S): L0002017 , L0002018 , L0002019 , L0002020 , L0002021 , L0002022 , L0002023 , L0002024 , L0002025 , L0002026 , L0002027 , L0002028 , L0002029 , L0002030 , L0002031 , L0002032 , L0002033 , L0002034 , L0002035 , L0002036 , L0002037 , L0002038 , L0002039 , L0002040 , L0002041 ,

*** DISCRETE CARTESIAN RECEPTOR POINTS ***

** CONC OF PM_10 IN MICROGRAMS/M**3 **

X-COORD (M)	Y-COORD (M)	CONC	X-COORD (M)	Y-COORD (M)	CONC
397475.00	3768539.00	0.15092	397525.00	3768539.00	0.12813
396425.00	3768589.00	0.39188	396475.00	3768589.00	0.53445
396525.00	3768589.00	0.74620	396575.00	3768589.00	1.10687
396625.00	3768589.00	1.74419	396825.00	3768589.00	8.86762
396875.00	3768589.00	10.98400	396925.00	3768589.00	8.83627
396975.00	3768589.00	5.80558	397025.00	3768589.00	3.23796
397075.00	3768589.00	1.84005	397125.00	3768589.00	1.19186
397175.00	3768589.00	0.81434	397225.00	3768589.00	0.58278
397275.00	3768589.00	0.43632	397325.00	3768589.00	0.33172
397375.00	3768589.00	0.26349	397425.00	3768589.00	0.19666
397475.00	3768589.00	0.15987	397525.00	3768589.00	0.13494
396425.00	3768639.00	0.34847	396475.00	3768639.00	0.47399
396525.00	3768639.00	0.62210	396575.00	3768639.00	0.87311
396625.00	3768639.00	1.26193	396675.00	3768639.00	1.82232
396725.00	3768639.00	2.54645	396775.00	3768639.00	3.42754
396825.00	3768639.00	4.38252	396875.00		

3768639.00 4.94450
396925.00 3768639.00 4.59652 396975.00
3768639.00 3.66095
397025.00 3768639.00 2.53021 397075.00
3768639.00 1.65762
397125.00 3768639.00 1.09853 397175.00
3768639.00 0.81966
397225.00 3768639.00 0.60564 397275.00
3768639.00 0.46122
397325.00 3768639.00 0.35957 397375.00
3768639.00 0.28570
397425.00 3768639.00 0.23065 397475.00
3768639.00 0.17046
397525.00 3768639.00 0.14373 396425.00
3768689.00 0.30906
396475.00 3768689.00 0.41624 396525.00
3768689.00 0.54066
396575.00 3768689.00 0.71711 396625.00
3768689.00 0.96852
396675.00 3768689.00 1.30324 396725.00
3768689.00 1.68816
396775.00 3768689.00 2.11394 396825.00
3768689.00 2.51536
396875.00 3768689.00 2.78829 396925.00
3768689.00 2.72348
396975.00 3768689.00 2.36508 397025.00
3768689.00 1.87913
397075.00 3768689.00 1.42658 397125.00
3768689.00 1.01026
397175.00 3768689.00 0.78444 397225.00
3768689.00 0.60609
397275.00 3768689.00 0.46993 397325.00
3768689.00 0.37126
397375.00 3768689.00 0.29784 397425.00
3768689.00 0.24284
397475.00 3768689.00 0.20076 397525.00
3768689.00 0.16808

*** MODELOPTs: RegDFAULT CONC ELEV URBAN ADJ_U*

*** THE PERIOD (43848 HRS) AVERAGE CONCENTRATION VALUES FOR SOURCE GROUP: MISC5 ***
INCLUDING SOURCE(S): L0002042 , L0002043 , L0002044 , L0002045 , L0002046 , L0002047 , L0002048 , L0002049 , L0002050 , L0002051 , L0002052 , L0002053 , L0002054 , L0002055 ,

*** DISCRETE CARTESIAN RECEPTOR POINTS ***

** CONC OF PM_10 IN MICROGRAMS/M**3 **

X-COORD (M)	Y-COORD (M)	CONC	X-COORD (M)	Y-COORD (M)	CONC
396166.28	3767377.28	0.08183	396266.28	3767377.28	0.08526
396366.28	3767377.28	0.09067	396466.28	3767377.28	0.09229
396566.28	3767377.28	0.09433	396666.28	3767377.28	0.09073
396766.28	3767377.28	0.08499	396866.28	3767377.28	0.08051
396966.28	3767377.28	0.07811	397066.28	3767377.28	0.07325
397166.28	3767377.28	0.06623	397266.28	3767377.28	0.05876
397366.28	3767377.28	0.05340	397466.28	3767377.28	0.04836
397566.28	3767377.28	0.04335	397666.28	3767377.28	0.03901
397766.28	3767377.28	0.03469	397866.28	3767377.28	0.03140
396166.28	3767477.28	0.10150	396266.28	3767477.28	0.10692
396366.28	3767477.28	0.11790	396466.28	3767477.28	0.12319
396566.28	3767477.28	0.12360	396666.28	3767477.28	0.11841
396766.28	3767477.28	0.11099	396866.28	3767477.28	0.10319
396966.28	3767477.28	0.09752	397066.28	3767477.28	0.08938
397166.28	3767477.28	0.07915	397266.28	3767477.28	0.06883
397366.28	3767477.28	0.06057	397466.28	3767477.28	0.05403
397566.28	3767477.28	0.04783	397666.28		

3767477.28 0.04245
397766.28 3767477.28 0.03787 397866.28
3767477.28 0.03399
396166.28 3767577.28 0.12284 396266.28
3767577.28 0.13786
396366.28 3767577.28 0.15460 396466.28
3767577.28 0.16772
396566.28 3767577.28 0.17368 396666.28
3767577.28 0.17035
396766.28 3767577.28 0.14983 396866.28
3767577.28 0.13909
396966.28 3767577.28 0.12462 397066.28
3767577.28 0.10968
397166.28 3767577.28 0.09509 397266.28
3767577.28 0.08081
397366.28 3767577.28 0.06907 397466.28
3767577.28 0.06044
397566.28 3767577.28 0.05261 397666.28
3767577.28 0.04617
397766.28 3767577.28 0.04079 397866.28
3767577.28 0.03631
396166.28 3767677.28 0.15111 396266.28
3767677.28 0.18030
396366.28 3767677.28 0.21704 396466.28
3767677.28 0.25100
396566.28 3767677.28 0.26271 396666.28
3767677.28 0.24077
396766.28 3767677.28 0.22361 396866.28
3767677.28 0.20195
396966.28 3767677.28 0.17234 397066.28
3767677.28 0.14004
397166.28 3767677.28 0.11495 397266.28
3767677.28 0.09584
397366.28 3767677.28 0.07908 397466.28
3767677.28 0.06707
397566.28 3767677.28 0.05742 397666.28
3767677.28 0.04986
397766.28 3767677.28 0.04360 397866.28
3767677.28 0.03842
396166.28 3767777.28 0.18084 396266.28
3767777.28 0.24093
396366.28 3767777.28 0.31295 396466.28
3767777.28 0.39292
396566.28 3767777.28 0.42406 396666.28
3767777.28 0.41139
396766.28 3767777.28 0.37541 396866.28
3767777.28 0.31063

*** MODELOPTs: RegDFAULT CONC ELEV URBAN ADJ_U*

*** THE PERIOD (43848 HRS) AVERAGE CONCENTRATION VALUES FOR SOURCE GROUP: MISC5 ***
INCLUDING SOURCE(S): L0002042 , L0002043 , L0002044 , L0002045 , L0002046 , L0002047 , L0002048 , L0002049 , L0002050 , L0002051 , L0002052 , L0002053 , L0002054 , L0002055 ,

*** DISCRETE CARTESIAN RECEPTOR POINTS ***

** CONC OF PM_10 IN MICROGRAMS/M**3 **

X-COORD (M)	Y-COORD (M)	CONC	X-COORD (M)	Y-COORD (M)	CONC
396966.28	3767777.28	0.23985	397066.28	3767777.28	0.18208
397166.28	3767777.28	0.14016	397266.28	3767777.28	0.11181
397366.28	3767777.28	0.09010	397466.28	3767777.28	0.07365
397566.28	3767777.28	0.06185	397666.28	3767777.28	0.05325
397766.28	3767777.28	0.04607	397866.28	3767777.28	0.04043
396166.28	3767877.28	0.20913	396266.28	3767877.28	0.30156
396366.28	3767877.28	0.44916	396466.28	3767877.28	0.65638
396566.28	3767877.28	0.85666	397466.28	3767877.28	0.08147
397566.28	3767877.28	0.06625	397666.28	3767877.28	0.05526
397766.28	3767877.28	0.04747	397866.28	3767877.28	0.04239
396166.28	3767977.28	0.22710	396266.28	3767977.28	0.35089
396366.28	3767977.28	0.58728	396466.28	3767977.28	1.07140
397466.28	3767977.28	0.08570	397566.28	3767977.28	0.06908
397666.28	3767977.28	0.05759	397766.28	3767977.28	0.05105
397866.28	3767977.28	0.04368	396166.28	3768077.28	0.24423
396266.28	3768077.28	0.37392	396366.28	3768077.28	0.66383
396466.28	3768077.28	1.46467	397466.28		

3768077.28 0.09351
397566.28 3768077.28 0.07619 397666.28
3768077.28 0.06316
397766.28 3768077.28 0.05335 397866.28
3768077.28 0.04553
396166.28 3768177.28 0.24133 396266.28
3768177.28 0.37610
396366.28 3768177.28 0.67222 396466.28
3768177.28 1.43223
397466.28 3768177.28 0.10240 397566.28
3768177.28 0.08100
397666.28 3768177.28 0.06595 397766.28
3768177.28 0.05550
397866.28 3768177.28 0.04682 396166.28
3768277.28 0.22117
396266.28 3768277.28 0.33647 396366.28
3768277.28 0.57154
396466.28 3768277.28 1.12446 397366.28
3768277.28 0.14689
397466.28 3768277.28 0.11079 397566.28
3768277.28 0.08685
397666.28 3768277.28 0.06956 397766.28
3768277.28 0.05742
397866.28 3768277.28 0.04899 396166.28
3768377.28 0.19369
396266.28 3768377.28 0.28796 396366.28
3768377.28 0.45174
396466.28 3768377.28 0.77929 397266.28
3768377.28 0.22161
397366.28 3768377.28 0.16004 397466.28
3768377.28 0.12024
397566.28 3768377.28 0.09379 397666.28
3768377.28 0.07518
397766.28 3768377.28 0.06153 397866.28
3768377.28 0.05214
396166.28 3768477.28 0.16727 396266.28
3768477.28 0.23668
396366.28 3768477.28 0.34639 396466.28
3768477.28 0.53187
397166.28 3768477.28 0.31017 397266.28
3768477.28 0.22639
397366.28 3768477.28 0.16616 397466.28
3768477.28 0.12548
397566.28 3768477.28 0.09940 397666.28
3768477.28 0.07943
397766.28 3768477.28 0.06577 397866.28
3768477.28 0.05473

*** MODELOPTs: RegDFAULT CONC ELEV URBAN ADJ_U*

*** THE PERIOD (43848 HRS) AVERAGE CONCENTRATION VALUES FOR SOURCE GROUP: MISC5 ***
INCLUDING SOURCE(S): L0002042 , L0002043 , L0002044 , L0002045 , L0002046 , L0002047 , L0002048 , L0002049 , L0002050 , L0002051 , L0002052 , L0002053 , L0002054 , L0002055 ,

*** DISCRETE CARTESIAN RECEPTOR POINTS ***

** CONC OF PM_10 IN MICROGRAMS/M**3 **

X-COORD (M)	Y-COORD (M)	CONC	X-COORD (M)	Y-COORD (M)	CONC
396166.28	3768577.28	0.14570	396266.28	3768577.28	0.18941
396366.28	3768577.28	0.26183	396466.28	3768577.28	0.37601
396566.28	3768577.28	0.52842	396866.28	3768577.28	0.63647
396966.28	3768577.28	0.49840	397066.28	3768577.28	0.37272
397166.28	3768577.28	0.28290	397266.28	3768577.28	0.21535
397366.28	3768577.28	0.16607	397466.28	3768577.28	0.12727
397566.28	3768577.28	0.10295	397666.28	3768577.28	0.08341
397766.28	3768577.28	0.06819	397866.28	3768577.28	0.05703
396166.28	3768677.28	0.12420	396266.28	3768677.28	0.16016
396366.28	3768677.28	0.20640	396466.28	3768677.28	0.27515
396566.28	3768677.28	0.35657	396666.28	3768677.28	0.43364
396766.28	3768677.28	0.46422	396866.28	3768677.28	0.43808
396966.28	3768677.28	0.37414	397066.28	3768677.28	0.30488
397166.28	3768677.28	0.24325	397366.28	3768677.28	0.15742
397466.28	3768677.28	0.12692	397566.28	3768677.28	0.10329
397666.28	3768677.28	0.08497	397766.28	3768677.28	0.07025
397866.28	3768677.28	0.05905	396166.28		

3768777.28 0.10785
396266.28 3768777.28 0.13332 396366.28
3768777.28 0.16577
396466.28 3768777.28 0.20872 396566.28
3768777.28 0.25459
396666.28 3768777.28 0.29768 396766.28
3768777.28 0.32195
396866.28 3768777.28 0.31637 396966.28
3768777.28 0.28598
397066.28 3768777.28 0.24598 397166.28
3768777.28 0.20551
397266.28 3768777.28 0.17236 397366.28
3768777.28 0.14309
397466.28 3768777.28 0.11864 397566.28
3768777.28 0.09893
397666.28 3768777.28 0.08307 397766.28
3768777.28 0.07013
397866.28 3768777.28 0.05977 396166.28
3768877.28 0.09283
396266.28 3768877.28 0.11267 396366.28
3768877.28 0.13509
396466.28 3768877.28 0.16356 396566.28
3768877.28 0.19329
396666.28 3768877.28 0.21894 396766.28
3768877.28 0.23682
396866.28 3768877.28 0.24222 396966.28
3768877.28 0.22700
397066.28 3768877.28 0.20092 397166.28
3768877.28 0.17402
397266.28 3768877.28 0.14992 397366.28
3768877.28 0.12745
397466.28 3768877.28 0.10864 397566.28
3768877.28 0.09281
397666.28 3768877.28 0.07918 397766.28
3768877.28 0.06809
397866.28 3768877.28 0.05910 396425.00
3767739.00 0.30931
396475.00 3767739.00 0.33435 396525.00
3767739.00 0.34409
396575.00 3767739.00 0.35384 396625.00
3767739.00 0.33501
396675.00 3767739.00 0.32502 396725.00
3767739.00 0.32345
396775.00 3767739.00 0.29674 396825.00
3767739.00 0.27960
396875.00 3767739.00 0.25856 396925.00
3767739.00 0.23204

*** MODELOPTs: RegDFAULT CONC ELEV URBAN ADJ_U*

*** THE PERIOD (43848 HRS) AVERAGE CONCENTRATION VALUES FOR SOURCE GROUP: MISC5 ***
INCLUDING SOURCE(S): L0002042 , L0002043 , L0002044 , L0002045 , L0002046 , L0002047 , L0002048 , L0002049 , L0002050 , L0002051 , L0002052 , L0002053 , L0002054 , L0002055 ,

*** DISCRETE CARTESIAN RECEPTOR POINTS ***

** CONC OF PM_10 IN MICROGRAMS/M**3 **

X-COORD (M)	Y-COORD (M)	CONC	X-COORD (M)	Y-COORD (M)	CONC
396975.00	3767739.00	0.20646	397025.00	3767739.00	0.18255
397075.00	3767739.00	0.16088	397125.00	3767739.00	0.14245
397175.00	3767739.00	0.12732	397225.00	3767739.00	0.11434
397275.00	3767739.00	0.10356	397325.00	3767739.00	0.09329
397375.00	3767739.00	0.08429	397425.00	3767739.00	0.07681
397475.00	3767739.00	0.07004	397525.00	3767739.00	0.06433
396425.00	3767789.00	0.38405	396475.00	3767789.00	0.42225
396525.00	3767789.00	0.44493	396575.00	3767789.00	0.45222
396625.00	3767789.00	0.45187	396675.00	3767789.00	0.44230
396725.00	3767789.00	0.43294	396775.00	3767789.00	0.39507
396825.00	3767789.00	0.35996	396875.00	3767789.00	0.31977
396925.00	3767789.00	0.27948	396975.00	3767789.00	0.24339
397025.00	3767789.00	0.21116	397075.00	3767789.00	0.18322
397125.00	3767789.00	0.15952	397175.00	3767789.00	0.14028
397225.00	3767789.00	0.12430	397275.00	3767789.00	0.11151
397325.00	3767789.00	0.09990	397375.00	3767789.00	0.08970
397425.00	3767789.00	0.08108	397475.00		

3767789.00 0.07322
397525.00 3767789.00 0.06705 396425.00
3767839.00 0.48096
396475.00 3767839.00 0.55738 396525.00
3767839.00 0.59471
396575.00 3767839.00 0.63654 396625.00
3767839.00 0.64766
396675.00 3767839.00 0.66427 396725.00
3767839.00 0.61513
396775.00 3767839.00 0.54361 396825.00
3767839.00 0.47055
396875.00 3767839.00 0.40153 396925.00
3767839.00 0.33912
396975.00 3767839.00 0.28519 397025.00
3767839.00 0.24001
397075.00 3767839.00 0.20720 397125.00
3767839.00 0.17717
397175.00 3767839.00 0.15452 397225.00
3767839.00 0.13527
397275.00 3767839.00 0.11843 397325.00
3767839.00 0.10490
397375.00 3767839.00 0.09513 397475.00
3767839.00 0.07744
397525.00 3767839.00 0.06960 396425.00
3767889.00 0.60094
396475.00 3767889.00 0.70368 396525.00
3767889.00 0.84278
396575.00 3767889.00 0.98457 397475.00
3767889.00 0.08002
397525.00 3767889.00 0.07172 396425.00
3767939.00 0.74036
396475.00 3767939.00 0.93225 396525.00
3767939.00 1.25908
397475.00 3767939.00 0.08202 397525.00
3767939.00 0.07389
396425.00 3767989.00 0.84891 396475.00
3767989.00 1.20791
397475.00 3767989.00 0.08409 397525.00
3767989.00 0.07562
396425.00 3768039.00 0.95657 396475.00
3768039.00 1.46445
397475.00 3768039.00 0.08850 397525.00
3768039.00 0.08022
396425.00 3768089.00 1.02413 396475.00
3768089.00 1.61557
397475.00 3768089.00 0.09251 397525.00
3768089.00 0.08367

*** MODELOPTs: RegDFAULT CONC ELEV URBAN ADJ_U*

*** THE PERIOD (43848 HRS) AVERAGE CONCENTRATION VALUES FOR SOURCE GROUP: MISC5 ***
INCLUDING SOURCE(S): L0002042 , L0002043 , L0002044 , L0002045 , L0002046 , L0002047 , L0002048 , L0002049 , L0002050 , L0002051 , L0002052 , L0002053 , L0002054 , L0002055 ,

*** DISCRETE CARTESIAN RECEPTOR POINTS ***

** CONC OF PM_10 IN MICROGRAMS/M**3 **

X-COORD (M)	Y-COORD (M)	CONC	X-COORD (M)	Y-COORD (M)	CONC
396425.00	3768139.00	1.08101	396475.00	3768139.00	1.61526
397425.00	3768139.00	0.10965	397475.00	3768139.00	0.09712
397525.00	3768139.00	0.08674	396425.00	3768189.00	1.02448
396475.00	3768189.00	1.52399	397375.00	3768189.00	0.13148
397425.00	3768189.00	0.11462	397475.00	3768189.00	0.10112
397525.00	3768189.00	0.08976	396425.00	3768239.00	0.92960
396475.00	3768239.00	1.36066	397375.00	3768239.00	0.13791
397425.00	3768239.00	0.11867	397475.00	3768239.00	0.10375
397525.00	3768239.00	0.09194	396425.00	3768289.00	0.80850
396475.00	3768289.00	1.15650	397325.00	3768289.00	0.16915
397375.00	3768289.00	0.14474	397425.00	3768289.00	0.12528
397475.00	3768289.00	0.10974	397525.00	3768289.00	0.09661
396425.00	3768339.00	0.70079	396475.00	3768339.00	0.95470
396525.00	3768339.00	1.39708	397275.00	3768339.00	0.20957
397325.00	3768339.00	0.17686	397375.00	3768339.00	0.15146
397425.00	3768339.00	0.13091	397475.00	3768339.00	0.11429
397525.00	3768339.00	0.10071	396425.00		

3768389.00 0.59297
396475.00 3768389.00 0.77900 396525.00
3768389.00 1.06440
397225.00 3768389.00 0.25854 397275.00
3768389.00 0.21630
397325.00 3768389.00 0.18313 397375.00
3768389.00 0.15705
397425.00 3768389.00 0.13573 397475.00
3768389.00 0.11843
397525.00 3768389.00 0.10419 396425.00
3768439.00 0.50783
396475.00 3768439.00 0.63998 396525.00
3768439.00 0.82824
397175.00 3768439.00 0.30833 397225.00
3768439.00 0.26064
397275.00 3768439.00 0.21990 397325.00
3768439.00 0.18666
397375.00 3768439.00 0.16011 397425.00
3768439.00 0.13867
397475.00 3768439.00 0.12220 397525.00
3768439.00 0.10750
396425.00 3768489.00 0.42988 396475.00
3768489.00 0.52808
396525.00 3768489.00 0.66024 397075.00
3768489.00 0.41837
397125.00 3768489.00 0.35161 397175.00
3768489.00 0.29938
397225.00 3768489.00 0.25676 397275.00
3768489.00 0.21988
397325.00 3768489.00 0.18773 397375.00
3768489.00 0.16235
397425.00 3768489.00 0.14101 397475.00
3768489.00 0.12291
397525.00 3768489.00 0.10895 396425.00
3768539.00 0.36673
396475.00 3768539.00 0.44204 396525.00
3768539.00 0.53442
396575.00 3768539.00 0.64784 397025.00
3768539.00 0.45374
397075.00 3768539.00 0.38812 397125.00
3768539.00 0.33226
397175.00 3768539.00 0.28718 397225.00
3768539.00 0.24852
397275.00 3768539.00 0.21637 397325.00
3768539.00 0.18683
397375.00 3768539.00 0.16294 397425.00
3768539.00 0.14187

*** MODELOPTs: RegDFAULT CONC ELEV URBAN ADJ_U*

*** THE PERIOD (43848 HRS) AVERAGE CONCENTRATION VALUES FOR SOURCE GROUP: MISC5 ***
INCLUDING SOURCE(S): L0002042 , L0002043 , L0002044 , L0002045 , L0002046 , L0002047 , L0002048 , L0002049 , L0002050 , L0002051 , L0002052 , L0002053 , L0002054 , L0002055 ,

*** DISCRETE CARTESIAN RECEPTOR POINTS ***

** CONC OF PM_10 IN MICROGRAMS/M**3 **

X-COORD (M)	Y-COORD (M)	CONC	X-COORD (M)	Y-COORD (M)	CONC
397475.00	3768539.00	0.12457	397525.00	3768539.00	0.11016
396425.00	3768589.00	0.31493	396475.00	3768589.00	0.37239
396525.00	3768589.00	0.44064	396575.00	3768589.00	0.51526
396625.00	3768589.00	0.58981	396825.00	3768589.00	0.65112
396875.00	3768589.00	0.59967	396925.00	3768589.00	0.53157
396975.00	3768589.00	0.47175	397025.00	3768589.00	0.41202
397075.00	3768589.00	0.35611	397125.00	3768589.00	0.31166
397175.00	3768589.00	0.27225	397225.00	3768589.00	0.23777
397275.00	3768589.00	0.20843	397325.00	3768589.00	0.18391
397375.00	3768589.00	0.16182	397425.00	3768589.00	0.14122
397475.00	3768589.00	0.12453	397525.00	3768589.00	0.11090
396425.00	3768639.00	0.27141	396475.00	3768639.00	0.31643
396525.00	3768639.00	0.36562	396575.00	3768639.00	0.41947
396625.00	3768639.00	0.47275	396675.00	3768639.00	0.51682
396725.00	3768639.00	0.54432	396775.00	3768639.00	0.54885
396825.00	3768639.00	0.53312	396875.00	3768639.00	0.49936
396925.00	3768639.00	0.45585	396975.00		

3768639.00 0.41169
397025.00 3768639.00 0.36637 397075.00
3768639.00 0.32241
397125.00 3768639.00 0.28188 397175.00
3768639.00 0.25333
397225.00 3768639.00 0.22484 397275.00
3768639.00 0.19996
397325.00 3768639.00 0.17817 397375.00
3768639.00 0.15830
397425.00 3768639.00 0.14114 397475.00
3768639.00 0.12360
397525.00 3768639.00 0.11082 396425.00
3768689.00 0.23598
396475.00 3768689.00 0.27183 396525.00
3768689.00 0.30881
396575.00 3768689.00 0.34862 396625.00
3768689.00 0.38608
396675.00 3768689.00 0.41821 396725.00
3768689.00 0.43743
396775.00 3768689.00 0.44365 396825.00
3768689.00 0.43587
396875.00 3768689.00 0.41722 396925.00
3768689.00 0.38882
396975.00 3768689.00 0.35647 397025.00
3768689.00 0.32354
397075.00 3768689.00 0.29212 397125.00
3768689.00 0.25825
397175.00 3768689.00 0.23429 397225.00
3768689.00 0.21130
397275.00 3768689.00 0.18965 397325.00
3768689.00 0.17046
397375.00 3768689.00 0.15319 397425.00
3768689.00 0.13770
397475.00 3768689.00 0.12401 397525.00
3768689.00 0.11179

*** MODELOPTs: RegDFAULT CONC ELEV URBAN ADJ_U*

*** THE PERIOD (43848 HRS) AVERAGE CONCENTRATION VALUES FOR SOURCE GROUP: MISC6 ***
INCLUDING SOURCE(S): L0002069 , L0002070 , L0002071 , L0002072 , L0002073 , L0002074 , L0002075 , L0002076 , L0002077 , L0002078 , L0002079 , L0002080 , L0002081 , L0002082 , L0002083 , L0002084 , L0002085 , L0002086 ,

*** DISCRETE CARTESIAN RECEPTOR POINTS ***

** CONC OF PM_10 IN MICROGRAMS/M**3 **

X-COORD (M)	Y-COORD (M)	CONC	X-COORD (M)	Y-COORD (M)	CONC
396166.28	3767377.28	0.05013	396266.28	3767377.28	0.05734
396366.28	3767377.28	0.06874	396466.28	3767377.28	0.08206
396566.28	3767377.28	0.10039	396666.28	3767377.28	0.11951
396766.28	3767377.28	0.13934	396866.28	3767377.28	0.16300
396966.28	3767377.28	0.19340	397066.28	3767377.28	0.21628
397166.28	3767377.28	0.22317	397266.28	3767377.28	0.21410
397366.28	3767377.28	0.20539	397466.28	3767377.28	0.18697
397566.28	3767377.28	0.16085	397666.28	3767377.28	0.13505
397766.28	3767377.28	0.10928	397866.28	3767377.28	0.09049
396166.28	3767477.28	0.05277	396266.28	3767477.28	0.06004
396366.28	3767477.28	0.07341	396466.28	3767477.28	0.08992
396566.28	3767477.28	0.11140	396666.28	3767477.28	0.13796
396766.28	3767477.28	0.17152	396866.28	3767477.28	0.21416
396966.28	3767477.28	0.27225	397066.28	3767477.28	0.32622
397166.28	3767477.28	0.35319	397266.28	3767477.28	0.34310
397366.28	3767477.28	0.31475	397466.28	3767477.28	0.27558

397566.28 3767477.28 0.22310 397666.28 3767477.28 0.17551
397766.28 3767477.28 0.13753 397866.28 3767477.28 0.10922
396166.28 3767577.28 0.05393 396266.28 3767577.28 0.06268
396366.28 3767577.28 0.07606 396466.28 3767577.28 0.09516
396566.28 3767577.28 0.12222 396666.28 3767577.28 0.16061
396766.28 3767577.28 0.20425 396866.28 3767577.28 0.28510
396966.28 3767577.28 0.39396 397066.28 3767577.28 0.52163
397166.28 3767577.28 0.62524 397266.28 3767577.28 0.62888
397366.28 3767577.28 0.54851 397466.28 3767577.28 0.44501
397566.28 3767577.28 0.32326 397666.28 3767577.28 0.23203
397766.28 3767577.28 0.17015 397866.28 3767577.28 0.12873
396166.28 3767677.28 0.05524 396266.28 3767677.28 0.06469
396366.28 3767677.28 0.07924 396466.28 3767677.28 0.10046
396566.28 3767677.28 0.13010 396666.28 3767677.28 0.16894
396766.28 3767677.28 0.24218 396866.28 3767677.28 0.38119
396966.28 3767677.28 0.62818 397066.28 3767677.28 0.97260
397166.28 3767677.28 1.32831 397266.28 3767677.28 1.51181
397366.28 3767677.28 1.19723 397466.28 3767677.28 0.81950
397566.28 3767677.28 0.48804 397666.28 3767677.28 0.30508
397766.28 3767677.28 0.20612 397866.28 3767677.28 0.14818
396166.28 3767777.28 0.05556 396266.28 3767777.28 0.06651
396366.28 3767777.28 0.08087 396466.28 3767777.28 0.10197
396566.28 3767777.28 0.13093 396666.28 3767777.28 0.17879
396766.28 3767777.28 0.27358 396866.28 3767777.28 0.46843

*** MODELOPTs: RegDFAULT CONC ELEV URBAN ADJ_U*

*** THE PERIOD (43848 HRS) AVERAGE CONCENTRATION VALUES FOR SOURCE GROUP: MISC6 ***
INCLUDING SOURCE(S): L0002069 , L0002070 , L0002071 , L0002072 , L0002073 , L0002074 , L0002075 , L0002076 , L0002077 , L0002078 , L0002079 , L0002080 , L0002081 , L0002082 , L0002083 , L0002084 , L0002085 , L0002086 ,

*** DISCRETE CARTESIAN RECEPTOR POINTS ***

** CONC OF PM_10 IN MICROGRAMS/M**3 **

X-COORD (M)	Y-COORD (M)	CONC	X-COORD (M)	Y-COORD (M)	CONC
396966.28	3767777.28	0.93914	397066.28	3767777.28	2.28209
397166.28	3767777.28	4.33352	397266.28	3767777.28	5.88198
397366.28	3767777.28	4.39730	397466.28	3767777.28	1.85333
397566.28	3767777.28	0.73556	397666.28	3767777.28	0.38985
397766.28	3767777.28	0.24258	397866.28	3767777.28	0.16737
396166.28	3767877.28	0.05520	396266.28	3767877.28	0.06608
396366.28	3767877.28	0.08075	396466.28	3767877.28	0.10085
396566.28	3767877.28	0.13014	397466.28	3767877.28	4.08609
397566.28	3767877.28	1.02069	397666.28	3767877.28	0.45639
397766.28	3767877.28	0.26996	397866.28	3767877.28	0.18913
396166.28	3767977.28	0.05388	396266.28	3767977.28	0.06451
396366.28	3767977.28	0.07851	396466.28	3767977.28	0.09714
397466.28	3767977.28	2.73343	397566.28	3767977.28	1.09014
397666.28	3767977.28	0.52433	397766.28	3767977.28	0.32857
397866.28	3767977.28	0.21133	396166.28	3768077.28	0.05300
396266.28	3768077.28	0.06218	396366.28	3768077.28	0.07506

396466.28	3768077.28	0.09306	397466.28	3768077.28	1.53325
397566.28	3768077.28	0.94419	397666.28	3768077.28	0.56080
397766.28	3768077.28	0.35013	397866.28	3768077.28	0.23236
396166.28	3768177.28	0.05077	396266.28	3768177.28	0.05983
396366.28	3768177.28	0.07150	396466.28	3768177.28	0.08692
397466.28	3768177.28	0.96027	397566.28	3768177.28	0.70193
397666.28	3768177.28	0.48202	397766.28	3768177.28	0.33535
397866.28	3768177.28	0.23300	396166.28	3768277.28	0.04747
396266.28	3768277.28	0.05646	396366.28	3768277.28	0.06668
396466.28	3768277.28	0.07996	397366.28	3768277.28	0.70421
397466.28	3768277.28	0.63684	397566.28	3768277.28	0.51941
397666.28	3768277.28	0.39235	397766.28	3768277.28	0.29208
397866.28	3768277.28	0.22209	396166.28	3768377.28	0.04311
396266.28	3768377.28	0.05297	396366.28	3768377.28	0.06172
396466.28	3768377.28	0.07300	397266.28	3768377.28	0.44462
397366.28	3768377.28	0.46878	397466.28	3768377.28	0.44624
397566.28	3768377.28	0.38974	397666.28	3768377.28	0.32085
397766.28	3768377.28	0.25509	397866.28	3768377.28	0.20347
396166.28	3768477.28	0.04042	396266.28	3768477.28	0.04836
396366.28	3768477.28	0.05528	396466.28	3768477.28	0.06630
397166.28	3768477.28	0.27076	397266.28	3768477.28	0.31144
397366.28	3768477.28	0.32772	397466.28	3768477.28	0.31890
397566.28	3768477.28	0.29711	397666.28	3768477.28	0.25659
397766.28	3768477.28	0.21629	397866.28	3768477.28	0.17854

*** MODELOPTs: RegDFAULT CONC ELEV URBAN ADJ_U*

*** THE PERIOD (43848 HRS) AVERAGE CONCENTRATION VALUES FOR SOURCE GROUP: MISC6 ***
INCLUDING SOURCE(S): L0002069 , L0002070 , L0002071 , L0002072 , L0002073 , L0002074 , L0002075 , L0002076 , L0002077 , L0002078 , L0002079 , L0002080 , L0002081 , L0002082 , L0002083 , L0002084 , L0002085 , L0002086 ,

*** DISCRETE CARTESIAN RECEPTOR POINTS ***

** CONC OF PM_10 IN MICROGRAMS/M**3 **

X-COORD (M)	Y-COORD (M)	CONC	X-COORD (M)	Y-COORD (M)	CONC
396166.28	3768577.28	0.04067	396266.28	3768577.28	0.04204
396366.28	3768577.28	0.04795	396466.28	3768577.28	0.06000
396566.28	3768577.28	0.06885	396866.28	3768577.28	0.12070
396966.28	3768577.28	0.14514	397066.28	3768577.28	0.17283
397166.28	3768577.28	0.20363	397266.28	3768577.28	0.23017
397366.28	3768577.28	0.24482	397466.28	3768577.28	0.23768
397566.28	3768577.28	0.23088	397666.28	3768577.28	0.20882
397766.28	3768577.28	0.18081	397866.28	3768577.28	0.15448
396166.28	3768677.28	0.03806	396266.28	3768677.28	0.04273
396366.28	3768677.28	0.04524	396466.28	3768677.28	0.05482
396566.28	3768677.28	0.06287	396666.28	3768677.28	0.07383
396766.28	3768677.28	0.08655	396866.28	3768677.28	0.10138
396966.28	3768677.28	0.11848	397066.28	3768677.28	0.13794
397166.28	3768677.28	0.15793	397366.28	3768677.28	0.18927
397466.28	3768677.28	0.19174	397566.28	3768677.28	0.18477
397666.28	3768677.28	0.17151	397766.28	3768677.28	0.15306

397866.28 3768677.28 0.13422 396166.28 3768777.28 0.03582
396266.28 3768777.28 0.03981 396366.28 3768777.28 0.04312
396466.28 3768777.28 0.05008 396566.28 3768777.28 0.05742
396666.28 3768777.28 0.06567 396766.28 3768777.28 0.07534
396866.28 3768777.28 0.08639 396966.28 3768777.28 0.09877
397066.28 3768777.28 0.11255 397166.28 3768777.28 0.12646
397266.28 3768777.28 0.14023 397366.28 3768777.28 0.14957
397466.28 3768777.28 0.15284 397566.28 3768777.28 0.14992
397666.28 3768777.28 0.14167 397766.28 3768777.28 0.12970
397866.28 3768777.28 0.11652 396166.28 3768877.28 0.03352
396266.28 3768877.28 0.03722 396366.28 3768877.28 0.04132
396466.28 3768877.28 0.04598 396566.28 3768877.28 0.05222
396666.28 3768877.28 0.05865 396766.28 3768877.28 0.06625
396866.28 3768877.28 0.07533 396966.28 3768877.28 0.08462
397066.28 3768877.28 0.09418 397166.28 3768877.28 0.10428
397266.28 3768877.28 0.11415 397366.28 3768877.28 0.12098
397466.28 3768877.28 0.12441 397566.28 3768877.28 0.12359
397666.28 3768877.28 0.11824 397766.28 3768877.28 0.11041
397866.28 3768877.28 0.10143 396425.00 3767739.00 0.09234
396475.00 3767739.00 0.10424 396525.00 3767739.00 0.11755
396575.00 3767739.00 0.13556 396625.00 3767739.00 0.15339
396675.00 3767739.00 0.18061 396725.00 3767739.00 0.22404
396775.00 3767739.00 0.27174 396825.00 3767739.00 0.35019
396875.00 3767739.00 0.46404 396925.00 3767739.00 0.62412

*** MODELOPTs: RegDFAULT CONC ELEV URBAN ADJ_U*

*** THE PERIOD (43848 HRS) AVERAGE CONCENTRATION VALUES FOR SOURCE GROUP: MISC6 ***
INCLUDING SOURCE(S): L0002069 , L0002070 , L0002071 , L0002072 , L0002073 , L0002074 , L0002075 , L0002076 , L0002077 , L0002078 , L0002079 , L0002080 , L0002081 , L0002082 , L0002083 , L0002084 , L0002085 , L0002086 ,

*** DISCRETE CARTESIAN RECEPTOR POINTS ***

** CONC OF PM_10 IN MICROGRAMS/M**3 **

X-COORD (M)	Y-COORD (M)	CONC	X-COORD (M)	Y-COORD (M)	CONC
396975.00	3767739.00	0.86359	397025.00	3767739.00	1.21482
397075.00	3767739.00	1.67070	397125.00	3767739.00	2.15434
397175.00	3767739.00	2.59377	397225.00	3767739.00	2.90471
397275.00	3767739.00	3.14345	397325.00	3767739.00	2.84879
397375.00	3767739.00	2.27859	397425.00	3767739.00	1.68630
397475.00	3767739.00	1.22848	397525.00	3767739.00	0.84094
396425.00	3767789.00	0.09268	396475.00	3767789.00	0.10413
396525.00	3767789.00	0.11747	396575.00	3767789.00	0.13369
396625.00	3767789.00	0.15561	396675.00	3767789.00	0.18579
396725.00	3767789.00	0.23090	396775.00	3767789.00	0.28706
396825.00	3767789.00	0.37305	396875.00	3767789.00	0.50060
396925.00	3767789.00	0.70001	396975.00	3767789.00	1.04520
397025.00	3767789.00	1.67740	397075.00	3767789.00	2.81840
397125.00	3767789.00	4.35967	397175.00	3767789.00	5.44449
397225.00	3767789.00	6.37696	397275.00	3767789.00	7.43108
397325.00	3767789.00	7.13485	397375.00	3767789.00	5.13316

397425.00 3767789.00 3.10047 397475.00
3767789.00 1.86519
397525.00 3767789.00 1.10342 396425.00
3767839.00 0.09251
396475.00 3767839.00 0.10429 396525.00
3767839.00 0.11652
396575.00 3767839.00 0.13390 396625.00
3767839.00 0.15642
396675.00 3767839.00 0.19175 396725.00
3767839.00 0.23494
396775.00 3767839.00 0.29455 396825.00
3767839.00 0.38253
396875.00 3767839.00 0.51775 396925.00
3767839.00 0.73922
396975.00 3767839.00 1.13285 397025.00
3767839.00 1.99733
397075.00 3767839.00 5.04510 397125.00
3767839.00 17.85391
397175.00 3767839.00 18.04063 397225.00
3767839.00 19.99966
397275.00 3767839.00 16.25763 397325.00
3767839.00 17.00854
397375.00 3767839.00 16.16854 397475.00
3767839.00 2.75524
397525.00 3767839.00 1.39709 396425.00
3767889.00 0.09177
396475.00 3767889.00 0.10182 396525.00
3767889.00 0.11564
396575.00 3767889.00 0.13412 397475.00
3767889.00 3.65689
397525.00 3767889.00 1.64340 396425.00
3767939.00 0.09058
396475.00 3767939.00 0.10046 396525.00
3767939.00 0.11435
397475.00 3767939.00 3.15043 397525.00
3767939.00 1.69657
396425.00 3767989.00 0.08820 396475.00
3767989.00 0.09876
397475.00 3767989.00 2.33927 397525.00
3767989.00 1.52741
396425.00 3768039.00 0.08630 396475.00
3768039.00 0.09674
397475.00 3768039.00 1.80133 397525.00
3768039.00 1.33707
396425.00 3768089.00 0.08425 396475.00
3768089.00 0.09429
397475.00 3768089.00 1.39426 397525.00
3768089.00 1.12036

*** MODELOPTs: RegDFAULT CONC ELEV URBAN ADJ_U*

*** THE PERIOD (43848 HRS) AVERAGE CONCENTRATION VALUES FOR SOURCE GROUP: MISC6 ***
INCLUDING SOURCE(S): L0002069 , L0002070 , L0002071 , L0002072 , L0002073 , L0002074 , L0002075 , L0002076 , L0002077 , L0002078 , L0002079 , L0002080 , L0002081 , L0002082 , L0002083 , L0002084 , L0002085 , L0002086 ,

*** DISCRETE CARTESIAN RECEPTOR POINTS ***

** CONC OF PM_10 IN MICROGRAMS/M**3 **

X-COORD (M)	Y-COORD (M)	CONC	X-COORD (M)	Y-COORD (M)	CONC
396425.00	3768139.00	0.08245	396475.00	3768139.00	0.09113
397425.00	3768139.00	1.27064	397475.00	3768139.00	1.10953
397525.00	3768139.00	0.93225	396425.00	3768189.00	0.07958
396475.00	3768189.00	0.08770	397375.00	3768189.00	1.06891
397425.00	3768189.00	0.99144	397475.00	3768189.00	0.89382
397525.00	3768189.00	0.77708	396425.00	3768239.00	0.07655
396475.00	3768239.00	0.08410	397375.00	3768239.00	0.83480
397425.00	3768239.00	0.77977	397475.00	3768239.00	0.71169
397525.00	3768239.00	0.63784	396425.00	3768289.00	0.07338
396475.00	3768289.00	0.08044	397325.00	3768289.00	0.67084
397375.00	3768289.00	0.66729	397425.00	3768289.00	0.64282
397475.00	3768289.00	0.60305	397525.00	3768289.00	0.54962
396425.00	3768339.00	0.07034	396475.00	3768339.00	0.07682
396525.00	3768339.00	0.08457	397275.00	3768339.00	0.52387
397325.00	3768339.00	0.54076	397375.00	3768339.00	0.54328
397425.00	3768339.00	0.52962	397475.00	3768339.00	0.50349

397525.00 3768339.00 0.46842 396425.00 3768389.00 0.06727
396475.00 3768389.00 0.07325 396525.00 3768389.00 0.08025
397225.00 3768389.00 0.40385 397275.00 3768389.00 0.42876
397325.00 3768389.00 0.44392 397375.00 3768389.00 0.44906
397425.00 3768389.00 0.44243 397475.00 3768389.00 0.42555
397525.00 3768389.00 0.40093 396425.00 3768439.00 0.06374
396475.00 3768439.00 0.06981 396525.00 3768439.00 0.07611
397175.00 3768439.00 0.31216 397225.00 3768439.00 0.33734
397275.00 3768439.00 0.35748 397325.00 3768439.00 0.36880
397375.00 3768439.00 0.37258 397425.00 3768439.00 0.36906
397475.00 3768439.00 0.36318 397525.00 3768439.00 0.34607
396425.00 3768489.00 0.06099 396475.00 3768489.00 0.06649
396525.00 3768489.00 0.07222 397075.00 3768489.00 0.21985
397125.00 3768489.00 0.24209 397175.00 3768489.00 0.26517
397225.00 3768489.00 0.28673 397275.00 3768489.00 0.30237
397325.00 3768489.00 0.31055 397375.00 3768489.00 0.31601
397425.00 3768489.00 0.31482 397475.00 3768489.00 0.30449
397525.00 3768489.00 0.29568 396425.00 3768539.00 0.05832
396475.00 3768539.00 0.06324 396525.00 3768539.00 0.06846
396575.00 3768539.00 0.07306 397025.00 3768539.00 0.17550
397075.00 3768539.00 0.19278 397125.00 3768539.00 0.21049
397175.00 3768539.00 0.22882 397225.00 3768539.00 0.24559
397275.00 3768539.00 0.25901 397325.00 3768539.00 0.26690
397375.00 3768539.00 0.27242 397425.00 3768539.00 0.27075

*** MODELOPTs: RegDFAULT CONC ELEV URBAN ADJ_U*

*** THE PERIOD (43848 HRS) AVERAGE CONCENTRATION VALUES FOR SOURCE GROUP: MISC6 ***
INCLUDING SOURCE(S): L0002069 , L0002070 , L0002071 , L0002072 , L0002073 , L0002074 , L0002075 , L0002076 , L0002077 , L0002078 , L0002079 , L0002080 , L0002081 , L0002082 , L0002083 , L0002084 , L0002085 , L0002086 ,

*** DISCRETE CARTESIAN RECEPTOR POINTS ***

** CONC OF PM_10 IN MICROGRAMS/M**3 **

X-COORD (M)	Y-COORD (M)	CONC	X-COORD (M)	Y-COORD (M)	CONC
397475.00	3768539.00	0.26406	397525.00	3768539.00	0.25562
396425.00	3768589.00	0.05529	396475.00	3768589.00	0.06013
396525.00	3768589.00	0.06431	396575.00	3768589.00	0.06885
396625.00	3768589.00	0.07449	396825.00	3768589.00	0.10959
396875.00	3768589.00	0.12016	396925.00	3768589.00	0.13122
396975.00	3768589.00	0.14390	397025.00	3768589.00	0.15719
397075.00	3768589.00	0.17063	397125.00	3768589.00	0.18547
397175.00	3768589.00	0.19987	397225.00	3768589.00	0.21303
397275.00	3768589.00	0.22446	397325.00	3768589.00	0.23262
397375.00	3768589.00	0.23774	397425.00	3768589.00	0.23485
397475.00	3768589.00	0.22957	397525.00	3768589.00	0.22389
396425.00	3768639.00	0.05199	396475.00	3768639.00	0.05744
396525.00	3768639.00	0.06051	396575.00	3768639.00	0.06541
396625.00	3768639.00	0.07115	396675.00	3768639.00	0.07757
396725.00	3768639.00	0.08475	396775.00	3768639.00	0.09272
396825.00	3768639.00	0.10116	396875.00	3768639.00	0.11002

396925.00 3768639.00 0.11947 396975.00
3768639.00 0.12991
397025.00 3768639.00 0.14081 397075.00
3768639.00 0.15176
397125.00 3768639.00 0.16227 397175.00
3768639.00 0.17543
397225.00 3768639.00 0.18659 397275.00
3768639.00 0.19650
397325.00 3768639.00 0.20428 397375.00
3768639.00 0.20904
397425.00 3768639.00 0.21044 397475.00
3768639.00 0.20215
397525.00 3768639.00 0.19875 396425.00
3768689.00 0.04903
396475.00 3768689.00 0.05503 396525.00
3768689.00 0.05903
396575.00 3768689.00 0.06323 396625.00
3768689.00 0.06839
396675.00 3768689.00 0.07395 396725.00
3768689.00 0.07988
396775.00 3768689.00 0.08630 396825.00
3768689.00 0.09325
396875.00 3768689.00 0.10083 396925.00
3768689.00 0.10884
396975.00 3768689.00 0.11741 397025.00
3768689.00 0.12658
397075.00 3768689.00 0.13628 397125.00
3768689.00 0.14466
397175.00 3768689.00 0.15537 397225.00
3768689.00 0.16511
397275.00 3768689.00 0.17332 397325.00
3768689.00 0.18004
397375.00 3768689.00 0.18459 397425.00
3768689.00 0.18675
397475.00 3768689.00 0.18635 397525.00
3768689.00 0.18363

*** MODELOPTs: RegDFAULT CONC ELEV URBAN ADJ_U*

*** THE PERIOD (43848 HRS) AVERAGE CONCENTRATION VALUES FOR SOURCE GROUP: MISC7 ***
INCLUDING SOURCE(S): L0002056 , L0002057 , L0002058 , L0002059 , L0002060 , L0002061 , L0002062 , L0002063 , L0002064 , L0002065 , L0002066 , L0002067 , L0002068 ,

*** DISCRETE CARTESIAN RECEPTOR POINTS ***

** CONC OF PM_10 IN MICROGRAMS/M**3 **

X-COORD (M)	Y-COORD (M)	CONC	X-COORD (M)	Y-COORD (M)	CONC
396166.28	3767377.28	0.03993	396266.28	3767377.28	0.04431
396366.28	3767377.28	0.05107	396466.28	3767377.28	0.05822
396566.28	3767377.28	0.06738	396666.28	3767377.28	0.07541
396766.28	3767377.28	0.08273	396866.28	3767377.28	0.09095
396966.28	3767377.28	0.10124	397066.28	3767377.28	0.10853
397166.28	3767377.28	0.11053	397266.28	3767377.28	0.10832
397366.28	3767377.28	0.10850	397466.28	3767377.28	0.10646
397566.28	3767377.28	0.09982	397666.28	3767377.28	0.09170
397766.28	3767377.28	0.08050	397866.28	3767377.28	0.07145
396166.28	3767477.28	0.04218	396266.28	3767477.28	0.04653
396366.28	3767477.28	0.05457	396466.28	3767477.28	0.06358
396566.28	3767477.28	0.07401	396666.28	3767477.28	0.08515
396766.28	3767477.28	0.09750	396866.28	3767477.28	0.11130
396966.28	3767477.28	0.12836	397066.28	3767477.28	0.14260
397166.28	3767477.28	0.14933	397266.28	3767477.28	0.14823
397366.28	3767477.28	0.14564	397466.28	3767477.28	0.14207
397566.28	3767477.28	0.13123	397666.28	3767477.28	0.11681

397766.28 3767477.28 0.10171 397866.28 3767477.28 0.08767
396166.28 3767577.28 0.04344 396266.28 3767577.28 0.04891
396366.28 3767577.28 0.05696 396466.28 3767577.28 0.06760
396566.28 3767577.28 0.08112 396666.28 3767577.28 0.09764
396766.28 3767577.28 0.11265 396866.28 3767577.28 0.13743
396966.28 3767577.28 0.16440 397066.28 3767577.28 0.19098
397166.28 3767577.28 0.21118 397266.28 3767577.28 0.21553
397366.28 3767577.28 0.20970 397466.28 3767577.28 0.20208
397566.28 3767577.28 0.18024 397666.28 3767577.28 0.15448
397766.28 3767577.28 0.12889 397866.28 3767577.28 0.10688
396166.28 3767677.28 0.04505 396266.28 3767677.28 0.05111
396366.28 3767677.28 0.06015 396466.28 3767677.28 0.07241
396566.28 3767677.28 0.08746 396666.28 3767677.28 0.10410
396766.28 3767677.28 0.13123 396866.28 3767677.28 0.17111
396966.28 3767677.28 0.22164 397066.28 3767677.28 0.27156
397166.28 3767677.28 0.31793 397266.28 3767677.28 0.35077
397366.28 3767677.28 0.33558 397466.28 3767677.28 0.31469
397566.28 3767677.28 0.26310 397666.28 3767677.28 0.21020
397766.28 3767677.28 0.16525 397866.28 3767677.28 0.12976
396166.28 3767777.28 0.04603 396266.28 3767777.28 0.05357
396366.28 3767777.28 0.06274 396466.28 3767777.28 0.07538
396566.28 3767777.28 0.09078 396666.28 3767777.28 0.11345
396766.28 3767777.28 0.15080 396866.28 3767777.28 0.20726

*** MODELOPTs: RegDFAULT CONC ELEV URBAN ADJ_U*

*** THE PERIOD (43848 HRS) AVERAGE CONCENTRATION VALUES FOR SOURCE GROUP: MISC7 ***
INCLUDING SOURCE(S): L0002056 , L0002057 , L0002058 , L0002059 , L0002060 , L0002061 , L0002062 , L0002063 , L0002064 , L0002065 , L0002066 , L0002067 , L0002068 ,

*** DISCRETE CARTESIAN RECEPTOR POINTS ***

** CONC OF PM_10 IN MICROGRAMS/M**3 **

X-COORD (M)	Y-COORD (M)	CONC	X-COORD (M)	Y-COORD (M)	CONC
396966.28	3767777.28	0.28959	397066.28	3767777.28	0.39889
397166.28	3767777.28	0.52267	397266.28	3767777.28	0.63691
397366.28	3767777.28	0.62945	397466.28	3767777.28	0.54901
397566.28	3767777.28	0.41172	397666.28	3767777.28	0.29354
397766.28	3767777.28	0.21299	397866.28	3767777.28	0.15831
396166.28	3767877.28	0.04656	396266.28	3767877.28	0.05444
396366.28	3767877.28	0.06446	396466.28	3767877.28	0.07716
396566.28	3767877.28	0.09427	397466.28	3767877.28	1.10677
397566.28	3767877.28	0.68149	397666.28	3767877.28	0.41092
397766.28	3767877.28	0.26929	397866.28	3767877.28	0.18723
396166.28	3767977.28	0.04635	396266.28	3767977.28	0.05447
396366.28	3767977.28	0.06468	396466.28	3767977.28	0.07744
397466.28	3767977.28	2.92118	397566.28	3767977.28	1.09046
397666.28	3767977.28	0.54285	397766.28	3767977.28	0.32703
397866.28	3767977.28	0.21022	396166.28	3768077.28	0.04677
396266.28	3768077.28	0.05399	396366.28	3768077.28	0.06405
396466.28	3768077.28	0.07774	397466.28	3768077.28	6.53824

397566.28 3768077.28 1.61541 397666.28
3768077.28 0.70552
397766.28 3768077.28 0.39244 397866.28
3768077.28 0.24363
396166.28 3768177.28 0.04632 396266.28
3768177.28 0.05365
396366.28 3768177.28 0.06353 396466.28
3768177.28 0.07631
397466.28 3768177.28 4.77031 397566.28
3768177.28 1.73558
397666.28 3768177.28 0.79379 397766.28
3768177.28 0.45010
397866.28 3768177.28 0.27112 396166.28
3768277.28 0.04539
396266.28 3768277.28 0.05213 396366.28
3768277.28 0.06150
396466.28 3768277.28 0.07365 397366.28
3768277.28 2.98991
397466.28 3768277.28 2.38993 397566.28
3768277.28 1.41706
397666.28 3768277.28 0.76714 397766.28
3768277.28 0.45509
397866.28 3768277.28 0.30012 396166.28
3768377.28 0.04361
396266.28 3768377.28 0.05045 396366.28
3768377.28 0.05899
396466.28 3768377.28 0.07018 397266.28
3768377.28 0.99390
397366.28 3768377.28 1.34325 397466.28
3768377.28 1.31890
397566.28 3768377.28 1.01155 397666.28
3768377.28 0.68139
397766.28 3768377.28 0.44748 397866.28
3768377.28 0.31324
396166.28 3768477.28 0.04190 396266.28
3768477.28 0.04846
396366.28 3768477.28 0.05624 396466.28
3768477.28 0.06588
397166.28 3768477.28 0.40851 397266.28
3768477.28 0.59631
397366.28 3768477.28 0.75787 397466.28
3768477.28 0.79324
397566.28 3768477.28 0.67746 397666.28
3768477.28 0.51884
397766.28 3768477.28 0.39522 397866.28
3768477.28 0.28731

*** MODELOPTs: RegDFAULT CONC ELEV URBAN ADJ_U*

*** THE PERIOD (43848 HRS) AVERAGE CONCENTRATION VALUES FOR SOURCE GROUP: MISC7 ***
INCLUDING SOURCE(S): L0002056 , L0002057 , L0002058 , L0002059 , L0002060 , L0002061 , L0002062 , L0002063 , L0002064 , L0002065 , L0002066 , L0002067 , L0002068 ,

*** DISCRETE CARTESIAN RECEPTOR POINTS ***

** CONC OF PM_10 IN MICROGRAMS/M**3 **

X-COORD (M)	Y-COORD (M)	CONC	X-COORD (M)	Y-COORD (M)	CONC
396166.28	3768577.28	0.04013	396266.28	3768577.28	0.04500
396366.28	3768577.28	0.05182	396466.28	3768577.28	0.06131
396566.28	3768577.28	0.07262	396866.28	3768577.28	0.13374
396966.28	3768577.28	0.17119	397066.28	3768577.28	0.22221
397166.28	3768577.28	0.29665	397266.28	3768577.28	0.38808
397366.28	3768577.28	0.47882	397466.28	3768577.28	0.51043
397566.28	3768577.28	0.47828	397666.28	3768577.28	0.40156
397766.28	3768577.28	0.31615	397866.28	3768577.28	0.24837
396166.28	3768677.28	0.03804	396266.28	3768677.28	0.04310
396366.28	3768677.28	0.04888	396466.28	3768677.28	0.05657
396566.28	3768677.28	0.06603	396666.28	3768677.28	0.07792
396766.28	3768677.28	0.09312	396866.28	3768677.28	0.11359
396966.28	3768677.28	0.14051	397066.28	3768677.28	0.17612
397166.28	3768677.28	0.22025	397366.28	3768677.28	0.32765
397466.28	3768677.28	0.35399	397566.28	3768677.28	0.34540
397666.28	3768677.28	0.30885	397766.28	3768677.28	0.25806
397866.28	3768677.28	0.21239	396166.28	3768777.28	0.03618

396266.28	3768777.28	0.04043	396366.28	3768777.28	0.04581
396466.28	3768777.28	0.05223	396566.28	3768777.28	0.05968
396666.28	3768777.28	0.06935	396766.28	3768777.28	0.08179
396866.28	3768777.28	0.09757	396966.28	3768777.28	0.11716
397066.28	3768777.28	0.14157	397166.28	3768777.28	0.17011
397266.28	3768777.28	0.20517	397366.28	3768777.28	0.23595
397466.28	3768777.28	0.25335	397566.28	3768777.28	0.25291
397666.28	3768777.28	0.23583	397766.28	3768777.28	0.20814
397866.28	3768777.28	0.17888	396166.28	3768877.28	0.03398
396266.28	3768877.28	0.03800	396366.28	3768877.28	0.04233
396466.28	3768877.28	0.04823	396566.28	3768877.28	0.05465
396666.28	3768877.28	0.06237	396766.28	3768877.28	0.07250
396866.28	3768877.28	0.08604	396966.28	3768877.28	0.10063
397066.28	3768877.28	0.11684	397166.28	3768877.28	0.13634
397266.28	3768877.28	0.15892	397366.28	3768877.28	0.17801
397466.28	3768877.28	0.19115	397566.28	3768877.28	0.19402
397666.28	3768877.28	0.18459	397766.28	3768877.28	0.16867
397866.28	3768877.28	0.15046	396425.00	3767739.00	0.06908
396475.00	3767739.00	0.07585	396525.00	3767739.00	0.08281
396575.00	3767739.00	0.09198	396625.00	3767739.00	0.10004
396675.00	3767739.00	0.11199	396725.00	3767739.00	0.12961
396775.00	3767739.00	0.14608	396825.00	3767739.00	0.17018
396875.00	3767739.00	0.19944	396925.00	3767739.00	0.23166

*** MODELOPTs: RegDFAULT CONC ELEV URBAN ADJ_U*

*** THE PERIOD (43848 HRS) AVERAGE CONCENTRATION VALUES FOR SOURCE GROUP: MISC7 ***
INCLUDING SOURCE(S): L0002056 , L0002057 , L0002058 , L0002059 , L0002060 , L0002061 , L0002062 , L0002063 , L0002064 , L0002065 , L0002066 , L0002067 , L0002068 ,

*** DISCRETE CARTESIAN RECEPTOR POINTS ***

** CONC OF PM_10 IN MICROGRAMS/M**3 **

X-COORD (M)	Y-COORD (M)	CONC	X-COORD (M)	Y-COORD (M)	CONC
396975.00	3767739.00	0.26875	397025.00	3767739.00	0.30930
397075.00	3767739.00	0.35068	397125.00	3767739.00	0.39228
397175.00	3767739.00	0.43385	397225.00	3767739.00	0.46841
397275.00	3767739.00	0.49875	397325.00	3767739.00	0.49698
397375.00	3767739.00	0.47786	397425.00	3767739.00	0.45118
397475.00	3767739.00	0.42832	397525.00	3767739.00	0.38281
396425.00	3767789.00	0.07028	396475.00	3767789.00	0.07688
396525.00	3767789.00	0.08415	396575.00	3767789.00	0.09257
396625.00	3767789.00	0.10341	396675.00	3767789.00	0.11729
396725.00	3767789.00	0.13633	396775.00	3767789.00	0.15677
396825.00	3767789.00	0.18405	396875.00	3767789.00	0.21714
396925.00	3767789.00	0.25708	396975.00	3767789.00	0.30722
397025.00	3767789.00	0.36511	397075.00	3767789.00	0.42904
397125.00	3767789.00	0.49752	397175.00	3767789.00	0.56888
397225.00	3767789.00	0.63320	397275.00	3767789.00	0.69603
397325.00	3767789.00	0.71157	397375.00	3767789.00	0.67844
397425.00	3767789.00	0.62452	397475.00	3767789.00	0.57882

397525.00 3767789.00 0.49877 396425.00
3767839.00 0.07124
396475.00 3767839.00 0.07834 396525.00
3767839.00 0.08513
396575.00 3767839.00 0.09470 396625.00
3767839.00 0.10642
396675.00 3767839.00 0.12390 396725.00
3767839.00 0.14297
396775.00 3767839.00 0.16624 396825.00
3767839.00 0.19599
396875.00 3767839.00 0.23400 396925.00
3767839.00 0.28229
396975.00 3767839.00 0.34626 397025.00
3767839.00 0.42677
397075.00 3767839.00 0.51954 397125.00
3767839.00 0.62762
397175.00 3767839.00 0.76680 397225.00
3767839.00 0.92113
397275.00 3767839.00 1.04599 397325.00
3767839.00 1.10120
397375.00 3767839.00 1.04422 397475.00
3767839.00 0.79066
397525.00 3767839.00 0.66786 396425.00
3767889.00 0.07187
396475.00 3767889.00 0.07794 396525.00
3767889.00 0.08631
396575.00 3767889.00 0.09712 397475.00
3767889.00 1.19956
397525.00 3767889.00 0.91437 396425.00
3767939.00 0.07225
396475.00 3767939.00 0.07850 396525.00
3767939.00 0.08738
397475.00 3767939.00 1.87389 397525.00
3767939.00 1.25438
396425.00 3767989.00 0.07165 396475.00
3767989.00 0.07889
397475.00 3767989.00 2.92205 397525.00
3767989.00 1.68058
396425.00 3768039.00 0.07156 396475.00
3768039.00 0.07912
397475.00 3768039.00 4.52016 397525.00
3768039.00 2.24338
396425.00 3768089.00 0.07139 396475.00
3768089.00 0.07908
397475.00 3768089.00 5.75092 397525.00
3768089.00 2.64417

*** MODELOPTs: RegDFAULT CONC ELEV URBAN ADJ_U*

*** THE PERIOD (43848 HRS) AVERAGE CONCENTRATION VALUES FOR SOURCE GROUP: MISC7 ***
INCLUDING SOURCE(S): L0002056 , L0002057 , L0002058 , L0002059 , L0002060 , L0002061 , L0002062 , L0002063 , L0002064 , L0002065 , L0002066 , L0002067 , L0002068 ,

*** DISCRETE CARTESIAN RECEPTOR POINTS ***

** CONC OF PM_10 IN MICROGRAMS/M**3 **

X-COORD (M)	Y-COORD (M)	CONC	X-COORD (M)	Y-COORD (M)	CONC
396425.00	3768139.00	0.07166	396475.00	3768139.00	0.07838
397425.00	3768139.00	11.19145	397475.00	3768139.00	5.23651
397525.00	3768139.00	2.74332	396425.00	3768189.00	0.07071
396475.00	3768189.00	0.07738	397375.00	3768189.00	8.49617
397425.00	3768189.00	6.00381	397475.00	3768189.00	4.07552
397525.00	3768189.00	2.53118	396425.00	3768239.00	0.06951
396475.00	3768239.00	0.07607	397375.00	3768239.00	4.49967
397425.00	3768239.00	3.51645	397475.00	3768239.00	2.69586
397525.00	3768239.00	1.96560	396425.00	3768289.00	0.06798
396475.00	3768289.00	0.07450	397325.00	3768289.00	2.39248
397375.00	3768289.00	2.68897	397425.00	3768289.00	2.61505
397475.00	3768289.00	2.21335	397525.00	3768289.00	1.71296
396425.00	3768339.00	0.06658	396475.00	3768339.00	0.07274
396525.00	3768339.00	0.08045	397275.00	3768339.00	1.30384
397325.00	3768339.00	1.59947	397375.00	3768339.00	1.77786
397425.00	3768339.00	1.79204	397475.00	3768339.00	1.63595
397525.00	3768339.00	1.39050	396425.00	3768389.00	0.06482

396475.00 3768389.00 0.07073 396525.00
3768389.00 0.07792
397225.00 3768389.00 0.77868 397275.00
3768389.00 0.96270
397325.00 3768389.00 1.14135 397375.00
3768389.00 1.25864
397425.00 3768389.00 1.28297 397475.00
3768389.00 1.21622
397525.00 3768389.00 1.08255 396425.00
3768439.00 0.06324
396475.00 3768439.00 0.06861 396525.00
3768439.00 0.07522
397175.00 3768439.00 0.49131 397225.00
3768439.00 0.61543
397275.00 3768439.00 0.73599 397325.00
3768439.00 0.85534
397375.00 3768439.00 0.94243 397425.00
3768439.00 0.97650
397475.00 3768439.00 0.93938 397525.00
3768439.00 0.86261
396425.00 3768489.00 0.06121 396475.00
3768489.00 0.06628
396525.00 3768489.00 0.07247 397075.00
3768489.00 0.28480
397125.00 3768489.00 0.33742 397175.00
3768489.00 0.40525
397225.00 3768489.00 0.48945 397275.00
3768489.00 0.58031
397325.00 3768489.00 0.66194 397375.00
3768489.00 0.72306
397425.00 3768489.00 0.75296 397475.00
3768489.00 0.74570
397525.00 3768489.00 0.70753 396425.00
3768539.00 0.05915
396475.00 3768539.00 0.06397 396525.00
3768539.00 0.06962
396575.00 3768539.00 0.07645 397025.00
3768539.00 0.21559
397075.00 3768539.00 0.25021 397125.00
3768539.00 0.29111
397175.00 3768539.00 0.34212 397225.00
3768539.00 0.40007
397275.00 3768539.00 0.46886 397325.00
3768539.00 0.52646
397375.00 3768539.00 0.57110 397425.00
3768539.00 0.59624

*** MODELOPTs: RegDFAULT CONC ELEV URBAN ADJ_U*

*** THE PERIOD (43848 HRS) AVERAGE CONCENTRATION VALUES FOR SOURCE GROUP: MISC7 ***
INCLUDING SOURCE(S): L0002056 , L0002057 , L0002058 , L0002059 , L0002060 , L0002061 , L0002062 , L0002063 , L0002064 , L0002065 , L0002066 , L0002067 , L0002068 ,

*** DISCRETE CARTESIAN RECEPTOR POINTS ***

** CONC OF PM_10 IN MICROGRAMS/M**3 **

X-COORD (M)	Y-COORD (M)	CONC	X-COORD (M)	Y-COORD (M)	CONC
397475.00	3768539.00	0.59709	397525.00	3768539.00	0.57620
396425.00	3768589.00	0.05715	396475.00	3768589.00	0.06158
396525.00	3768589.00	0.06695	396575.00	3768589.00	0.07293
396625.00	3768589.00	0.07973	396825.00	3768589.00	0.11948
396875.00	3768589.00	0.13411	396925.00	3768589.00	0.15023
396975.00	3768589.00	0.17117	397025.00	3768589.00	0.19502
397075.00	3768589.00	0.22137	397125.00	3768589.00	0.25516
397175.00	3768589.00	0.29327	397225.00	3768589.00	0.33459
397275.00	3768589.00	0.37873	397325.00	3768589.00	0.42790
397375.00	3768589.00	0.46157	397425.00	3768589.00	0.48222
397475.00	3768589.00	0.48687	397525.00	3768589.00	0.47631
396425.00	3768639.00	0.05502	396475.00	3768639.00	0.05913
396525.00	3768639.00	0.06409	396575.00	3768639.00	0.06953
396625.00	3768639.00	0.07574	396675.00	3768639.00	0.08284
396725.00	3768639.00	0.09100	396775.00	3768639.00	0.10029
396825.00	3768639.00	0.11121	396875.00	3768639.00	0.12362
396925.00	3768639.00	0.13791	396975.00	3768639.00	0.15521

397025.00 3768639.00 0.17467 397075.00 3768639.00 0.19579
397125.00 3768639.00 0.21819 397175.00 3768639.00 0.25111
397225.00 3768639.00 0.28372 397275.00 3768639.00 0.31862
397325.00 3768639.00 0.35340 397375.00 3768639.00 0.37947
397425.00 3768639.00 0.39825 397475.00 3768639.00 0.40383
397525.00 3768639.00 0.39929 396425.00 3768689.00 0.05271
396475.00 3768689.00 0.05671 396525.00 3768689.00 0.06107
396575.00 3768689.00 0.06613 396625.00 3768689.00 0.07163
396675.00 3768689.00 0.07801 396725.00 3768689.00 0.08507
396775.00 3768689.00 0.09324 396825.00 3768689.00 0.10265
396875.00 3768689.00 0.11364 396925.00 3768689.00 0.12596
396975.00 3768689.00 0.14007 397025.00 3768689.00 0.15631
397075.00 3768689.00 0.17502 397125.00 3768689.00 0.19225
397175.00 3768689.00 0.21762 397225.00 3768689.00 0.24441
397275.00 3768689.00 0.27069 397325.00 3768689.00 0.29656
397375.00 3768689.00 0.31854 397425.00 3768689.00 0.33365
397475.00 3768689.00 0.34112 397525.00 3768689.00 0.34018

```
 *** AERMOD - VERSION 22112  ***   *** C:\Lakes\Project Files\Garvey\Garvey.isc
***        03/04/24
 *** AERMET - VERSION  16216 ***   ***
***        13:00:54

PAGE 519
 *** MODELOPTs:    RegDFAULT  CONC  ELEV  URBAN  ADJ_U*

                              *** THE PERIOD ( 43848 HRS) AVERAGE CONCENTRATION
VALUES FOR SOURCE GROUP: PS       ***
                                  INCLUDING SOURCE(S):     PS          ,

                                            *** DISCRETE CARTESIAN RECEPTOR
POINTS ***

                                       ** CONC OF PM_10    IN MICROGRAMS/M**3
**

       X-COORD (M)   Y-COORD (M)        CONC                       X-COORD (M)
Y-COORD (M)        CONC
 - - - - - - - - - - - - - - - - - - - - - - - - - - - - - - - - - - - - - - - - - -
- - - - - - - - - - - - - - - - - - - - - - - - -
         396166.28    3767377.28        0.03741                     396266.28
3767377.28        0.04136
         396366.28    3767377.28        0.04743                     396466.28
3767377.28        0.05388
         396566.28    3767377.28        0.06219                     396666.28
3767377.28        0.06976
         396766.28    3767377.28        0.07703                     396866.28
3767377.28        0.08551
         396966.28    3767377.28        0.09626                     397066.28
3767377.28        0.10444
         397166.28    3767377.28        0.10780                     397266.28
3767377.28        0.10694
         397366.28    3767377.28        0.10807                     397466.28
3767377.28        0.10720
         397566.28    3767377.28        0.10203                     397666.28
3767377.28        0.09505
         397766.28    3767377.28        0.08444                     397866.28
3767377.28        0.07557
         396166.28    3767477.28        0.03933                     396266.28
3767477.28        0.04322
         396366.28    3767477.28        0.05032                     396466.28
3767477.28        0.05825
         396566.28    3767477.28        0.06747                     396666.28
3767477.28        0.07751
         396766.28    3767477.28        0.08896                     396866.28
3767477.28        0.10229
         396966.28    3767477.28        0.11934                     397066.28
3767477.28        0.13463
         397166.28    3767477.28        0.14367                     397266.28
3767477.28        0.14532
         397366.28    3767477.28        0.14498                     397466.28
3767477.28        0.14372
         397566.28    3767477.28        0.13542                     397666.28
3767477.28        0.12280
         397766.28    3767477.28        0.10840                     397866.28
3767477.28        0.09421
         396166.28    3767577.28        0.04038                     396266.28
```

3767577.28 0.04520
396366.28 3767577.28 0.05224 396466.28
3767577.28 0.06144
396566.28 3767577.28 0.07306 396666.28
3767577.28 0.08725
396766.28 3767577.28 0.10057 396866.28
3767577.28 0.12277
396966.28 3767577.28 0.14823 397066.28
3767577.28 0.17534
397166.28 3767577.28 0.19864 397266.28
3767577.28 0.20862
397366.28 3767577.28 0.20836 397466.28
3767577.28 0.20592
397566.28 3767577.28 0.18910 397666.28
3767577.28 0.16593
397766.28 3767577.28 0.14053 397866.28
3767577.28 0.11728
396166.28 3767677.28 0.04173 396266.28
3767677.28 0.04704
396366.28 3767677.28 0.05485 396466.28
3767677.28 0.06527
396566.28 3767677.28 0.07794 396666.28
3767677.28 0.09191
396766.28 3767677.28 0.11449 396866.28
3767677.28 0.14775
396966.28 3767677.28 0.19093 397066.28
3767677.28 0.23783
397166.28 3767677.28 0.28737 397266.28
3767677.28 0.32968
397366.28 3767677.28 0.33177 397466.28
3767677.28 0.32469
397566.28 3767677.28 0.28413 397666.28
3767677.28 0.23378
397766.28 3767677.28 0.18606 397866.28
3767677.28 0.14626
396166.28 3767777.28 0.04254 396266.28
3767777.28 0.04908
396366.28 3767777.28 0.05694 396466.28
3767777.28 0.06759
396566.28 3767777.28 0.08040 396666.28
3767777.28 0.09888
396766.28 3767777.28 0.12868 396866.28
3767777.28 0.17269

*** MODELOPTs: RegDFAULT CONC ELEV URBAN ADJ_U*

*** THE PERIOD (43848 HRS) AVERAGE CONCENTRATION VALUES FOR SOURCE GROUP: PS ***
INCLUDING SOURCE(S): PS ,

*** DISCRETE CARTESIAN RECEPTOR POINTS ***

** CONC OF PM_10 IN MICROGRAMS/M**3 **

X-COORD (M)	Y-COORD (M)	CONC	X-COORD (M)	Y-COORD (M)	CONC
396966.28	3767777.28	0.23657	397066.28	3767777.28	0.32548
397166.28	3767777.28	0.43876	397266.28	3767777.28	0.56565
397366.28	3767777.28	0.61382	397466.28	3767777.28	0.58413
397566.28	3767777.28	0.46969	397666.28	3767777.28	0.34508
397766.28	3767777.28	0.25047	397866.28	3767777.28	0.18419
396166.28	3767877.28	0.04298	396266.28	3767877.28	0.04978
396366.28	3767877.28	0.05831	396466.28	3767877.28	0.06896
396566.28	3767877.28	0.08303	397466.28	3767877.28	1.29066
397566.28	3767877.28	0.87085	397666.28	3767877.28	0.52676
397766.28	3767877.28	0.33472	397866.28	3767877.28	0.22553
396166.28	3767977.28	0.04281	396266.28	3767977.28	0.04981
396366.28	3767977.28	0.05848	396466.28	3767977.28	0.06916
397466.28	3767977.28	4.62178	397566.28	3767977.28	1.63943
397666.28	3767977.28	0.74466	397766.28	3767977.28	0.42647
397866.28	3767977.28	0.26026	396166.28	3768077.28	0.04316
396266.28	3768077.28	0.04942	396366.28	3768077.28	0.05799
396466.28	3768077.28	0.06943	397466.28	3768077.28	24.07155
397566.28	3768077.28	2.98537	397666.28	3768077.28	1.05921
397766.28	3768077.28	0.53018	397866.28		

3768077.28 0.30826
396166.28 3768177.28 0.04278 396266.28
3768177.28 0.04915
396366.28 3768177.28 0.05758 396466.28
3768177.28 0.06833
397466.28 3768177.28 9.16699 397566.28
3768177.28 3.02975
397666.28 3768177.28 1.19530 397766.28
3768177.28 0.61900
397866.28 3768177.28 0.34745 396166.28
3768277.28 0.04202
396266.28 3768277.28 0.04791 396366.28
3768277.28 0.05596
396466.28 3768277.28 0.06626 397366.28
3768277.28 2.57867
397466.28 3768277.28 3.02776 397566.28
3768277.28 2.05409
397666.28 3768277.28 1.07879 397766.28
3768277.28 0.60810
397866.28 3768277.28 0.38450 396166.28
3768377.28 0.04059
396266.28 3768377.28 0.04652 396366.28
3768377.28 0.05394
396466.28 3768377.28 0.06352 397266.28
3768377.28 0.77987
397366.28 3768377.28 1.20550 397466.28
3768377.28 1.45454
397566.28 3768377.28 1.27044 397666.28
3768377.28 0.88483
397766.28 3768377.28 0.57331 397866.28
3768377.28 0.39279
396166.28 3768477.28 0.03914 396266.28
3768477.28 0.04487
396366.28 3768477.28 0.05170 396466.28
3768477.28 0.06008
397166.28 3768477.28 0.33915 397266.28
3768477.28 0.50360
397366.28 3768477.28 0.69354 397466.28
3768477.28 0.82001
397566.28 3768477.28 0.77810 397666.28
3768477.28 0.62467
397766.28 3768477.28 0.48121 397866.28
3768477.28 0.34739

*** MODELOPTs: RegDFAULT CONC ELEV URBAN ADJ_U*

*** THE PERIOD (43848 HRS) AVERAGE CONCENTRATION VALUES FOR SOURCE GROUP: PS ***
INCLUDING SOURCE(S): PS ,

*** DISCRETE CARTESIAN RECEPTOR POINTS ***

** CONC OF PM_10 IN MICROGRAMS/M**3 **

X-COORD (M)	Y-COORD (M)	CONC	X-COORD (M)	Y-COORD (M)	CONC
396166.28	3768577.28	0.03759	396266.28	3768577.28	0.04116
396366.28	3768577.28	0.04832	396466.28	3768577.28	0.05634
396566.28	3768577.28	0.06617	396866.28	3768577.28	0.11771
396966.28	3768577.28	0.14882	397066.28	3768577.28	0.19199
397166.28	3768577.28	0.25686	397266.28	3768577.28	0.34277
397366.28	3768577.28	0.44546	397466.28	3768577.28	0.51546
397566.28	3768577.28	0.52067	397666.28	3768577.28	0.45913
397766.28	3768577.28	0.36842	397866.28	3768577.28	0.29016
396166.28	3768677.28	0.03580	396266.28	3768677.28	0.04036
396366.28	3768677.28	0.04561	396466.28	3768677.28	0.05237
396566.28	3768677.28	0.06068	396666.28	3768677.28	0.07101
396766.28	3768677.28	0.08410	396866.28	3768677.28	0.10160
396966.28	3768677.28	0.12487	397066.28	3768677.28	0.15637
397166.28	3768677.28	0.19664	397366.28	3768677.28	0.30840
397466.28	3768677.28	0.35227	397566.28	3768677.28	0.36402
397666.28	3768677.28	0.34010	397766.28	3768677.28	0.29103
397866.28	3768677.28	0.24144	396166.28	3768777.28	0.03419
396266.28	3768777.28	0.03806	396366.28	3768777.28	0.04304
396466.28	3768777.28	0.04864	396566.28		

3768777.28 0.05527
396666.28 3768777.28 0.06378 396766.28
3768777.28 0.07465
396866.28 3768777.28 0.08853 396966.28
3768777.28 0.10608
397066.28 3768777.28 0.12840 397166.28
3768777.28 0.15515
397266.28 3768777.28 0.18956 397366.28
3768777.28 0.22405
397466.28 3768777.28 0.25043 397566.28
3768777.28 0.26123
397666.28 3768777.28 0.25288 397766.28
3768777.28 0.22870
397866.28 3768777.28 0.19885 396166.28
3768877.28 0.03225
396266.28 3768877.28 0.03591 396366.28
3768877.28 0.03986
396466.28 3768877.28 0.04515 396566.28
3768877.28 0.05090
396666.28 3768877.28 0.05778 396766.28
3768877.28 0.06682
396866.28 3768877.28 0.07901 396966.28
3768877.28 0.09246
397066.28 3768877.28 0.10768 397166.28
3768877.28 0.12628
397266.28 3768877.28 0.14877 397366.28
3768877.28 0.17013
397466.28 3768877.28 0.18819 397566.28
3768877.28 0.19759
397666.28 3768877.28 0.19399 397766.28
3768877.28 0.18152
397866.28 3768877.28 0.16420 396425.00
3767739.00 0.06234
396475.00 3767739.00 0.06804 396525.00
3767739.00 0.07388
396575.00 3767739.00 0.08148 396625.00
3767739.00 0.08816
396675.00 3767739.00 0.09794 396725.00
3767739.00 0.11222
396775.00 3767739.00 0.12556 396825.00
3767739.00 0.14485
396875.00 3767739.00 0.16808 396925.00
3767739.00 0.19394

*** MODELOPTs: RegDFAULT CONC ELEV URBAN ADJ_U*

*** THE PERIOD (43848 HRS) AVERAGE CONCENTRATION VALUES FOR SOURCE GROUP: PS ***
INCLUDING SOURCE(S): PS ,

*** DISCRETE CARTESIAN RECEPTOR POINTS ***

** CONC OF PM_10 IN MICROGRAMS/M**3 **

X-COORD (M)	Y-COORD (M)	CONC	X-COORD (M)	Y-COORD (M)	CONC
396975.00	3767739.00	0.22421	397025.00	3767739.00	0.25846
397075.00	3767739.00	0.29550	397125.00	3767739.00	0.33536
397175.00	3767739.00	0.37822	397225.00	3767739.00	0.41884
397275.00	3767739.00	0.45801	397325.00	3767739.00	0.47342
397375.00	3767739.00	0.47232	397425.00	3767739.00	0.46188
397475.00	3767739.00	0.45168	397525.00	3767739.00	0.41667
396425.00	3767789.00	0.06328	396475.00	3767789.00	0.06883
396525.00	3767789.00	0.07488	396575.00	3767789.00	0.08184
396625.00	3767789.00	0.09069	396675.00	3767789.00	0.10191
396725.00	3767789.00	0.11707	396775.00	3767789.00	0.13321
396825.00	3767789.00	0.15441	396875.00	3767789.00	0.17990
396925.00	3767789.00	0.21060	396975.00	3767789.00	0.24902
397025.00	3767789.00	0.29445	397075.00	3767789.00	0.34695
397125.00	3767789.00	0.40670	397175.00	3767789.00	0.47388
397225.00	3767789.00	0.54285	397275.00	3767789.00	0.61671
397325.00	3767789.00	0.66108	397375.00	3767789.00	0.66623
397425.00	3767789.00	0.64604	397475.00	3767789.00	0.62442
397525.00	3767789.00	0.56067	396425.00	3767839.00	0.06404
396475.00	3767839.00	0.06996	396525.00		

3767839.00 0.07561
396575.00 3767839.00 0.08345 396625.00
3767839.00 0.09294
396675.00 3767839.00 0.10685 396725.00
3767839.00 0.12180
396775.00 3767839.00 0.13980 396825.00
3767839.00 0.16241
396875.00 3767839.00 0.19082 396925.00
3767839.00 0.22645
396975.00 3767839.00 0.27278 397025.00
3767839.00 0.33111
397075.00 3767839.00 0.40148 397125.00
3767839.00 0.48681
397175.00 3767839.00 0.59994 397225.00
3767839.00 0.73521
397275.00 3767839.00 0.86947 397325.00
3767839.00 0.97637
397375.00 3767839.00 1.01187 397475.00
3767839.00 0.89122
397525.00 3767839.00 0.78854 396425.00
3767889.00 0.06453
396475.00 3767889.00 0.06962 396525.00
3767889.00 0.07652
396575.00 3767889.00 0.08531 397475.00
3767889.00 1.44220
397525.00 3767889.00 1.16655 396425.00
3767939.00 0.06483
396475.00 3767939.00 0.07005 396525.00
3767939.00 0.07734
397475.00 3767939.00 2.55821 397525.00
3767939.00 1.80911
396425.00 3767989.00 0.06435 396475.00
3767989.00 0.07036
397475.00 3767989.00 4.81826 397525.00
3767989.00 2.72831
396425.00 3768039.00 0.06428 396475.00
3768039.00 0.07056
397475.00 3768039.00 11.70264 397525.00
3768039.00 4.50461
396425.00 3768089.00 0.06416 396475.00
3768089.00 0.07054
397475.00 3768089.00 19.21837 397525.00
3768089.00 5.81128

*** MODELOPTs: RegDFAULT CONC ELEV URBAN ADJ_U*

*** THE PERIOD (43848 HRS) AVERAGE CONCENTRATION VALUES FOR SOURCE GROUP: PS ***
INCLUDING SOURCE(S): PS ,

*** DISCRETE CARTESIAN RECEPTOR POINTS ***

** CONC OF PM_10 IN MICROGRAMS/M**3 **

X-COORD (M)	Y-COORD (M)	CONC	X-COORD (M)	Y-COORD (M)	CONC
396425.00	3768139.00	0.06438	396475.00	3768139.00	0.07001
397425.00	3768139.00	27.94111	397475.00	3768139.00	13.25533
397525.00	3768139.00	5.73142	396425.00	3768189.00	0.06363
396475.00	3768189.00	0.06924	397375.00	3768189.00	7.49210
397425.00	3768189.00	8.67831	397475.00	3768189.00	7.39337
397525.00	3768189.00	4.59467	396425.00	3768239.00	0.06269
396475.00	3768239.00	0.06822	397375.00	3768239.00	3.99064
397425.00	3768239.00	4.15338	397475.00	3768239.00	3.85557
397525.00	3768239.00	3.01764	396425.00	3768289.00	0.06148
396475.00	3768289.00	0.06700	397325.00	3768289.00	1.81922
397375.00	3768289.00	2.41399	397425.00	3768289.00	2.85115
397475.00	3768289.00	2.81314	397525.00	3768289.00	2.36541
396425.00	3768339.00	0.06037	396475.00	3768339.00	0.06562
396525.00	3768339.00	0.07209	397275.00	3768339.00	0.98712
397325.00	3768339.00	1.29259	397375.00	3768339.00	1.61307
397425.00	3768339.00	1.86097	397475.00	3768339.00	1.91325
397525.00	3768339.00	1.76531	396425.00	3768389.00	0.05896
396475.00	3768389.00	0.06403	396525.00	3768389.00	0.07011
397225.00	3768389.00	0.60801	397275.00		

3768389.00 0.76825
397325.00 3768389.00 0.95972 397375.00
3768389.00 1.15194
397425.00 3768389.00 1.29680 397475.00
3768389.00 1.34821
397525.00 3768389.00 1.28831 396425.00
3768439.00 0.05768
396475.00 3768439.00 0.06233 396525.00
3768439.00 0.06798
397175.00 3768439.00 0.39876 397225.00
3768439.00 0.49987
397275.00 3768439.00 0.61043 397325.00
3768439.00 0.73885
397375.00 3768439.00 0.86664 397425.00
3768439.00 0.96801
397475.00 3768439.00 1.00560 397525.00
3768439.00 0.98154
396425.00 3768489.00 0.05604 396475.00
3768489.00 0.06046
396525.00 3768489.00 0.06579 397075.00
3768489.00 0.23869
397125.00 3768489.00 0.28186 397175.00
3768489.00 0.33852
397225.00 3768489.00 0.41102 397275.00
3768489.00 0.49525
397325.00 3768489.00 0.58334 397375.00
3768489.00 0.66933
397425.00 3768489.00 0.73895 397475.00
3768489.00 0.77830
397525.00 3768489.00 0.77606 396425.00
3768539.00 0.05435
396475.00 3768539.00 0.05857 396525.00
3768539.00 0.06347
396575.00 3768539.00 0.06932 397025.00
3768539.00 0.18464
397075.00 3768539.00 0.21349 397125.00
3768539.00 0.24821
397175.00 3768539.00 0.29229 397225.00
3768539.00 0.34428
397275.00 3768539.00 0.40895 397325.00
3768539.00 0.47165
397375.00 3768539.00 0.53223 397425.00
3768539.00 0.58135

```
 *** AERMOD - VERSION 22112  ***   *** C:\Lakes\Project Files\Garvey\Garvey.isc
***        03/04/24
 *** AERMET - VERSION  16216 ***   ***
***        13:00:54

PAGE 524
 *** MODELOPTs:    RegDFAULT  CONC  ELEV  URBAN  ADJ_U*

                              *** THE PERIOD ( 43848 HRS) AVERAGE CONCENTRATION
VALUES FOR SOURCE GROUP: PS       ***
                                  INCLUDING SOURCE(S):     PS          ,

                                            *** DISCRETE CARTESIAN RECEPTOR
POINTS ***

                                       ** CONC OF PM_10    IN MICROGRAMS/M**3
**

       X-COORD (M)   Y-COORD (M)        CONC                       X-COORD (M)
Y-COORD (M)        CONC
 - - - - - - - - - - - - - - - - - - - - - - - - - - - - - - - - - - - - - - - - - -
- - - - - - - - - - - - - - - - - - - - - - - - -
         397475.00    3768539.00        0.61306                     397525.00
3768539.00        0.61945
         396425.00    3768589.00        0.05269                     396475.00
3768589.00        0.05661
         396525.00    3768589.00        0.06127                     396575.00
3768589.00        0.06647
         396625.00    3768589.00        0.07237                     396825.00
3768589.00        0.10593
         396875.00    3768589.00        0.11811                     396925.00
3768589.00        0.13158
         396975.00    3768589.00        0.14906                     397025.00
3768589.00        0.16922
         397075.00    3768589.00        0.19191                     397125.00
3768589.00        0.22127
         397175.00    3768589.00        0.25518                     397225.00
3768589.00        0.29342
         397275.00    3768589.00        0.33683                     397325.00
3768589.00        0.38853
         397375.00    3768589.00        0.43270                     397425.00
3768589.00        0.46904
         397475.00    3768589.00        0.49414                     397525.00
3768589.00        0.50283
         396425.00    3768639.00        0.05098                     396475.00
3768639.00        0.05456
         396525.00    3768639.00        0.05892                     396575.00
3768639.00        0.06366
         396625.00    3768639.00        0.06902                     396675.00
3768639.00        0.07512
         396725.00    3768639.00        0.08210                     396775.00
3768639.00        0.09002
         396825.00    3768639.00        0.09926                     396875.00
3768639.00        0.10977
         396925.00    3768639.00        0.12192                     396975.00
3768639.00        0.13670
         397025.00    3768639.00        0.15357                     397075.00
3768639.00        0.17222
         397125.00    3768639.00        0.19241                     397175.00
```

3768639.00 0.22205
397225.00 3768639.00 0.25265 397275.00
3768639.00 0.28715
397325.00 3768639.00 0.32440 397375.00
3768639.00 0.35758
397425.00 3768639.00 0.38709 397475.00
3768639.00 0.40621
397525.00 3768639.00 0.41545 396425.00
3768689.00 0.04901
396475.00 3768689.00 0.05252 396525.00
3768689.00 0.05636
396575.00 3768689.00 0.06080 396625.00
3768689.00 0.06560
396675.00 3768689.00 0.07113 396725.00
3768689.00 0.07722
396775.00 3768689.00 0.08424 396825.00
3768689.00 0.09230
396875.00 3768689.00 0.10175 396925.00
3768689.00 0.11240
396975.00 3768689.00 0.12475 397025.00
3768689.00 0.13911
397075.00 3768689.00 0.15586 397125.00
3768689.00 0.17172
397175.00 3768689.00 0.19500 397225.00
3768689.00 0.22036
397275.00 3768689.00 0.24669 397325.00
3768689.00 0.27461
397375.00 3768689.00 0.30137 397425.00
3768689.00 0.32398
397475.00 3768689.00 0.34076 397525.00
3768689.00 0.34960

*** MODELOPTs: RegDFAULT CONC ELEV URBAN ADJ_U*

*** THE PERIOD (43848 HRS) AVERAGE CONCENTRATION VALUES FOR SOURCE GROUP: RESIV ***
INCLUDING SOURCE(S): L0001804 , L0001805 , L0001806 , L0001807 , L0001808 , L0001809 , L0001810 , L0001811 , L0001812 , L0001813 , L0001814 , L0001815 , L0001816 , L0001817 , L0001818 , L0001819 , L0001820 , L0001821 , L0001822 , L0001823 , L0001824 , L0001825 , L0001826 , L0001827 , L0001828 , L0001829 , L0001830 , L0001831 , . . . ,

*** DISCRETE CARTESIAN RECEPTOR POINTS ***

** CONC OF PM_10 IN MICROGRAMS/M**3 **

X-COORD (M)	Y-COORD (M)	CONC	X-COORD (M)	Y-COORD (M)	CONC
396166.28	3767377.28	0.05482	396266.28	3767377.28	0.05899
396366.28	3767377.28	0.06543	396466.28	3767377.28	0.07043
396566.28	3767377.28	0.07632	396666.28	3767377.28	0.07792
396766.28	3767377.28	0.07758	396866.28	3767377.28	0.07790
396966.28	3767377.28	0.08021	397066.28	3767377.28	0.08040
397166.28	3767377.28	0.07686	397266.28	3767377.28	0.07118
397366.28	3767377.28	0.06764	397466.28	3767377.28	0.06348
397566.28	3767377.28	0.05764	397666.28	3767377.28	0.05213
397766.28	3767377.28	0.04585	397866.28	3767377.28	0.04118
396166.28	3767477.28	0.06255	396266.28	3767477.28	0.06736
396366.28	3767477.28	0.07701	396466.28	3767477.28	0.08562
396566.28	3767477.28	0.09281	396666.28	3767477.28	0.09680
396766.28	3767477.28	0.09905	396866.28	3767477.28	0.10044
396966.28	3767477.28	0.10339	397066.28	3767477.28	0.10359
397166.28	3767477.28	0.09873	397266.28	3767477.28	0.09033

397366.28 3767477.28 0.08282 397466.28 3767477.28 0.07640
397566.28 3767477.28 0.06828 397666.28 3767477.28 0.06023
397766.28 3767477.28 0.05304 397866.28 3767477.28 0.04687
396166.28 3767577.28 0.06934 396266.28 3767577.28 0.07767
396366.28 3767577.28 0.08921 396466.28 3767577.28 0.10262
396566.28 3767577.28 0.11655 396666.28 3767577.28 0.12835
396766.28 3767577.28 0.12927 396866.28 3767577.28 0.13656
396966.28 3767577.28 0.13912 397066.28 3767577.28 0.13767
397166.28 3767577.28 0.13170 397266.28 3767577.28 0.11888
397366.28 3767577.28 0.10514 397466.28 3767577.28 0.09450
397566.28 3767577.28 0.08185 397666.28 3767577.28 0.07059
397766.28 3767577.28 0.06077 397866.28 3767577.28 0.05269
396166.28 3767677.28 0.07804 396266.28 3767677.28 0.08972
396366.28 3767677.28 0.10669 396466.28 3767677.28 0.12802
396566.28 3767677.28 0.14862 396666.28 3767677.28 0.16156
396766.28 3767677.28 0.18140 396866.28 3767677.28 0.20176
396966.28 3767677.28 0.21260 397066.28 3767677.28 0.20288
397166.28 3767677.28 0.18710 397266.28 3767677.28 0.16922
397366.28 3767677.28 0.14023 397466.28 3767677.28 0.12099
397566.28 3767677.28 0.09985 397666.28 3767677.28 0.08290
397766.28 3767677.28 0.06952 397866.28 3767677.28 0.05870
396166.28 3767777.28 0.08627 396266.28 3767777.28 0.10544
396366.28 3767777.28 0.12763 396466.28 3767777.28 0.15695
396566.28 3767777.28 0.18646 396666.28 3767777.28 0.22432
396766.28 3767777.28 0.27601 396866.28 3767777.28 0.32723

*** MODELOPTs: RegDFAULT CONC ELEV URBAN ADJ_U*

*** THE PERIOD (43848 HRS) AVERAGE CONCENTRATION VALUES FOR SOURCE GROUP: RESIV ***
INCLUDING SOURCE(S): L0001804 , L0001805 , L0001806 , L0001807 , L0001808 , L0001809 , L0001810 , L0001811 , L0001812 , L0001813 , L0001814 , L0001815 , L0001816 , L0001817 , L0001818 , L0001819 , L0001820 , L0001821 , L0001822 , L0001823 , L0001824 , L0001825 , L0001826 , L0001827 , L0001828 , L0001829 , L0001830 , L0001831 , . . . ,

*** DISCRETE CARTESIAN RECEPTOR POINTS ***

** CONC OF PM_10 IN MICROGRAMS/M**3 **

X-COORD (M)	Y-COORD (M)	CONC	X-COORD (M)	Y-COORD (M)	CONC
396966.28	3767777.28	0.35533	397066.28	3767777.28	0.34010
397166.28	3767777.28	0.29893	397266.28	3767777.28	0.25508
397366.28	3767777.28	0.19849	397466.28	3767777.28	0.15820
397566.28	3767777.28	0.12347	397666.28	3767777.28	0.09749
397766.28	3767777.28	0.07942	397866.28	3767777.28	0.06576
396166.28	3767877.28	0.09396	396266.28	3767877.28	0.11872
396366.28	3767877.28	0.15154	396466.28	3767877.28	0.19241
396566.28	3767877.28	0.24623	397466.28	3767877.28	0.20727
397566.28	3767877.28	0.15294	397666.28	3767877.28	0.11556
397766.28	3767877.28	0.09044	397866.28	3767877.28	0.07223
396166.28	3767977.28	0.09927	396266.28	3767977.28	0.13003
396366.28	3767977.28	0.17359	396466.28	3767977.28	0.23296
397466.28	3767977.28	0.29091	397566.28	3767977.28	0.18930
397666.28	3767977.28	0.13434	397766.28	3767977.28	0.09975
397866.28	3767977.28	0.07698	396166.28	3768077.28	0.10695

396266.28	3768077.28	0.13880	396366.28	3768077.28	0.19308
396466.28	3768077.28	0.28590	397466.28	3768077.28	0.38959
397566.28	3768077.28	0.22427	397666.28	3768077.28	0.15089
397766.28	3768077.28	0.11081	397866.28	3768077.28	0.08419
396166.28	3768177.28	0.11036	396266.28	3768177.28	0.14745
396366.28	3768177.28	0.21299	396466.28	3768177.28	0.33092
397466.28	3768177.28	0.46301	397566.28	3768177.28	0.25598
397666.28	3768177.28	0.16577	397766.28	3768177.28	0.12042
397866.28	3768177.28	0.08934	396166.28	3768277.28	0.11052
396266.28	3768277.28	0.14592	396366.28	3768277.28	0.21402
396466.28	3768277.28	0.34824	397366.28	3768277.28	1.01182
397466.28	3768277.28	0.48092	397566.28	3768277.28	0.28244
397666.28	3768277.28	0.18024	397766.28	3768277.28	0.12702
397866.28	3768277.28	0.09708	396166.28	3768377.28	0.10669
396266.28	3768377.28	0.14050	396366.28	3768377.28	0.20258
396466.28	3768377.28	0.32649	397266.28	3768377.28	1.25605
397366.28	3768377.28	0.76277	397466.28	3768377.28	0.45711
397566.28	3768377.28	0.29373	397666.28	3768377.28	0.19744
397766.28	3768377.28	0.13940	397866.28	3768377.28	0.10680
396166.28	3768477.28	0.09994	396266.28	3768477.28	0.13133
396366.28	3768477.28	0.18535	396466.28	3768477.28	0.27609
397166.28	3768477.28	0.94196	397266.28	3768477.28	0.79740
397366.28	3768477.28	0.59133	397466.28	3768477.28	0.41032
397566.28	3768477.28	0.27397	397666.28	3768477.28	0.19362
397766.28	3768477.28	0.14737	397866.28	3768477.28	0.11046

*** MODELOPTs: RegDFAULT CONC ELEV URBAN ADJ_U*

*** THE PERIOD (43848 HRS) AVERAGE CONCENTRATION VALUES FOR SOURCE GROUP: RESIV ***
INCLUDING SOURCE(S): L0001804 , L0001805 , L0001806 , L0001807 , L0001808 , L0001809 , L0001810 , L0001811 , L0001812 , L0001813 , L0001814 , L0001815 , L0001816 , L0001817 , L0001818 , L0001819 , L0001820 , L0001821 , L0001822 , L0001823 , L0001824 , L0001825 , L0001826 , L0001827 , L0001828 , L0001829 , L0001830 , L0001831 , . . . ,

*** DISCRETE CARTESIAN RECEPTOR POINTS ***

** CONC OF PM_10 IN MICROGRAMS/M**3 **

X-COORD (M)	Y-COORD (M)	CONC	X-COORD (M)	Y-COORD (M)	CONC
396166.28	3768577.28	0.08934	396266.28	3768577.28	0.11820
396366.28	3768577.28	0.15981	396466.28	3768577.28	0.22445
396566.28	3768577.28	0.35510	396866.28	3768577.28	0.93903
396966.28	3768577.28	0.86028	397066.28	3768577.28	0.73328
397166.28	3768577.28	0.63768	397266.28	3768577.28	0.53848
397366.28	3768577.28	0.44648	397466.28	3768577.28	0.34238
397566.28	3768577.28	0.25335	397666.28	3768577.28	0.18792
397766.28	3768577.28	0.14116	397866.28	3768577.28	0.11028
396166.28	3768677.28	0.08054	396266.28	3768677.28	0.10187
396366.28	3768677.28	0.13517	396466.28	3768677.28	0.17921
396566.28	3768677.28	0.25326	396666.28	3768677.28	0.35552
396766.28	3768677.28	0.46021	396866.28	3768677.28	0.52744
396966.28	3768677.28	0.53033	397066.28	3768677.28	0.49873
397166.28	3768677.28	0.44825	397366.28	3768677.28	0.34436
397466.28	3768677.28	0.28058	397566.28	3768677.28	0.22248

397666.28 3768677.28 0.17434 397766.28
3768677.28 0.13563
397866.28 3768677.28 0.10846 396166.28
3768777.28 0.07333
396266.28 3768777.28 0.08938 396366.28
3768777.28 0.11452
396466.28 3768777.28 0.14600 396566.28
3768777.28 0.18675
396666.28 3768777.28 0.24152 396766.28
3768777.28 0.30048
396866.28 3768777.28 0.34368 396966.28
3768777.28 0.35875
397066.28 3768777.28 0.35243 397166.28
3768777.28 0.32917
397266.28 3768777.28 0.30477 397366.28
3768777.28 0.26790
397466.28 3768777.28 0.22596 397566.28
3768777.28 0.18689
397666.28 3768777.28 0.15332 397766.28
3768777.28 0.12531
397866.28 3768777.28 0.10335 396166.28
3768877.28 0.06534
396266.28 3768877.28 0.07913 396366.28
3768877.28 0.09546
396466.28 3768877.28 0.12047 396566.28
3768877.28 0.14800
396666.28 3768877.28 0.17969 396766.28
3768877.28 0.21584
396866.28 3768877.28 0.25272 396966.28
3768877.28 0.26631
397066.28 3768877.28 0.26245 397166.28
3768877.28 0.25186
397266.28 3768877.28 0.23712 397366.28
3768877.28 0.21276
397466.28 3768877.28 0.18654 397566.28
3768877.28 0.16010
397666.28 3768877.28 0.13454 397766.28
3768877.28 0.11341
397866.28 3768877.28 0.09641 396425.00
3767739.00 0.13499
396475.00 3767739.00 0.14840 396525.00
3767739.00 0.15968
396575.00 3767739.00 0.17506 396625.00
3767739.00 0.18371
396675.00 3767739.00 0.19869 396725.00
3767739.00 0.22142
396775.00 3767739.00 0.23357 396825.00
3767739.00 0.25336
396875.00 3767739.00 0.27264 396925.00
3767739.00 0.28252

*** MODELOPTs: RegDFAULT CONC ELEV URBAN ADJ_U*

*** THE PERIOD (43848 HRS) AVERAGE CONCENTRATION VALUES FOR SOURCE GROUP: RESIV ***
INCLUDING SOURCE(S): L0001804 , L0001805 , L0001806 , L0001807 , L0001808 , L0001809 , L0001810 , L0001811 , L0001812 , L0001813 , L0001814 , L0001815 , L0001816 , L0001817 , L0001818 , L0001819 , L0001820 , L0001821 , L0001822 , L0001823 , L0001824 , L0001825 , L0001826 , L0001827 , L0001828 , L0001829 , L0001830 , L0001831 , . . . ,

*** DISCRETE CARTESIAN RECEPTOR POINTS ***

** CONC OF PM_10 IN MICROGRAMS/M**3 **

X-COORD (M)	Y-COORD (M)	CONC	X-COORD (M)	Y-COORD (M)	CONC
396975.00	3767739.00	0.28643	397025.00	3767739.00	0.28249
397075.00	3767739.00	0.27122	397125.00	3767739.00	0.25700
397175.00	3767739.00	0.24242	397225.00	3767739.00	0.22587
397275.00	3767739.00	0.21146	397325.00	3767739.00	0.18946
397375.00	3767739.00	0.16869	397425.00	3767739.00	0.15129
397475.00	3767739.00	0.13944	397525.00	3767739.00	0.12462
396425.00	3767789.00	0.14863	396475.00	3767789.00	0.16348
396525.00	3767789.00	0.17834	396575.00	3767789.00	0.19455
396625.00	3767789.00	0.21476	396675.00	3767789.00	0.23887
396725.00	3767789.00	0.27097	396775.00	3767789.00	0.29578
396825.00	3767789.00	0.32583	396875.00	3767789.00	0.35140
396925.00	3767789.00	0.36842	396975.00	3767789.00	0.38171
397025.00	3767789.00	0.37879	397075.00	3767789.00	0.36217
397125.00	3767789.00	0.33930	397175.00	3767789.00	0.31425
397225.00	3767789.00	0.28647	397275.00	3767789.00	0.26382

397325.00 3767789.00 0.23368 397375.00 3767789.00 0.20225
397425.00 3767789.00 0.17650 397475.00 3767789.00 0.15988
397525.00 3767789.00 0.14023 396425.00 3767839.00 0.16360
396475.00 3767839.00 0.18353 396525.00 3767839.00 0.19979
396575.00 3767839.00 0.22464 396625.00 3767839.00 0.25383
396675.00 3767839.00 0.29935 396725.00 3767839.00 0.34211
396775.00 3767839.00 0.38571 396825.00 3767839.00 0.43111
396875.00 3767839.00 0.47324 396925.00 3767839.00 0.50434
396975.00 3767839.00 0.53325 397025.00 3767839.00 0.54045
397075.00 3767839.00 0.50479 397125.00 3767839.00 0.46535
397175.00 3767839.00 0.43193 397225.00 3767839.00 0.39460
397275.00 3767839.00 0.34784 397325.00 3767839.00 0.29859
397375.00 3767839.00 0.24858 397475.00 3767839.00 0.17973
397525.00 3767839.00 0.15847 396425.00 3767889.00 0.17941
396475.00 3767889.00 0.19844 396525.00 3767889.00 0.22674
396575.00 3767889.00 0.26395 397475.00 3767889.00 0.21174
397525.00 3767889.00 0.17943 396425.00 3767939.00 0.19624
396475.00 3767939.00 0.22080 396525.00 3767939.00 0.25895
397475.00 3767939.00 0.24819 397525.00 3767939.00 0.20315
396425.00 3767989.00 0.20922 396475.00 3767989.00 0.24591
397475.00 3767989.00 0.28961 397525.00 3767989.00 0.22969
396425.00 3768039.00 0.22654 396475.00 3768039.00 0.27385
397475.00 3768039.00 0.33301 397525.00 3768039.00 0.25476
396425.00 3768089.00 0.24449 396475.00 3768089.00 0.30346
397475.00 3768089.00 0.38007 397525.00 3768089.00 0.27978

*** MODELOPTs: RegDFAULT CONC ELEV URBAN ADJ_U*

*** THE PERIOD (43848 HRS) AVERAGE CONCENTRATION VALUES FOR SOURCE GROUP: RESIV ***
INCLUDING SOURCE(S): L0001804 , L0001805 , L0001806 , L0001807 , L0001808 , L0001809 , L0001810 , L0001811 , L0001812 , L0001813 , L0001814 , L0001815 , L0001816 , L0001817 , L0001818 , L0001819 , L0001820 , L0001821 , L0001822 , L0001823 , L0001824 , L0001825 , L0001826 , L0001827 , L0001828 , L0001829 , L0001830 , L0001831 , . . . ,

*** DISCRETE CARTESIAN RECEPTOR POINTS ***

** CONC OF PM_10 IN MICROGRAMS/M**3 **

X-COORD (M)	Y-COORD (M)	CONC	X-COORD (M)	Y-COORD (M)	CONC
396425.00	3768139.00	0.26856	396475.00	3768139.00	0.32914
397425.00	3768139.00	0.60521	397475.00	3768139.00	0.41388
397525.00	3768139.00	0.30378	396425.00	3768189.00	0.27932
396475.00	3768189.00	0.35053	397375.00	3768189.00	1.02391
397425.00	3768189.00	0.62108	397475.00	3768189.00	0.44233
397525.00	3768189.00	0.32598	396425.00	3768239.00	0.28424
396475.00	3768239.00	0.36364	397375.00	3768239.00	1.00821
397425.00	3768239.00	0.61218	397475.00	3768239.00	0.43286
397525.00	3768239.00	0.32640	396425.00	3768289.00	0.28043
396475.00	3768289.00	0.36562	397325.00	3768289.00	1.36491
397375.00	3768289.00	0.91300	397425.00	3768289.00	0.64504
397475.00	3768289.00	0.46769	397525.00	3768289.00	0.34951
396425.00	3768339.00	0.27504	396475.00	3768339.00	0.35610
396525.00	3768339.00	0.50268	397275.00	3768339.00	1.48810
397325.00	3768339.00	1.10509	397375.00	3768339.00	0.80526

397425.00 3768339.00 0.60369 397475.00
3768339.00 0.45945
397525.00 3768339.00 0.35732 396425.00
3768389.00 0.26076
396475.00 3768389.00 0.33571 396525.00
3768389.00 0.46394
397225.00 3768389.00 1.38245 397275.00
3768389.00 1.13770
397325.00 3768389.00 0.90958 397375.00
3768389.00 0.70525
397425.00 3768389.00 0.54872 397475.00
3768389.00 0.43233
397525.00 3768389.00 0.34413 396425.00
3768439.00 0.24846
396475.00 3768439.00 0.30998 396525.00
3768439.00 0.41430
397175.00 3768439.00 1.13328 397225.00
3768439.00 1.05850
397275.00 3768439.00 0.90429 397325.00
3768439.00 0.77125
397375.00 3768439.00 0.63687 397425.00
3768439.00 0.51804
397475.00 3768439.00 0.40706 397525.00
3768439.00 0.33023
396425.00 3768489.00 0.22774 396475.00
3768489.00 0.28015
396525.00 3768489.00 0.36478 397075.00
3768489.00 1.08824
397125.00 3768489.00 0.96935 397175.00
3768489.00 0.87875
397225.00 3768489.00 0.81092 397275.00
3768489.00 0.74429
397325.00 3768489.00 0.65681 397375.00
3768489.00 0.55552
397425.00 3768489.00 0.46598 397475.00
3768489.00 0.38980
397525.00 3768489.00 0.32462 396425.00
3768539.00 0.20747
396475.00 3768539.00 0.25250 396525.00
3768539.00 0.31779
396575.00 3768539.00 0.42601 397025.00
3768539.00 0.93295
397075.00 3768539.00 0.85135 397125.00
3768539.00 0.77661
397175.00 3768539.00 0.71787 397225.00
3768539.00 0.66081
397275.00 3768539.00 0.62604 397325.00
3768539.00 0.55959
397375.00 3768539.00 0.48469 397425.00
3768539.00 0.41843

*** MODELOPTs: RegDFAULT CONC ELEV URBAN ADJ_U*

*** THE PERIOD (43848 HRS) AVERAGE CONCENTRATION VALUES FOR SOURCE GROUP: RESIV ***
INCLUDING SOURCE(S): L0001804 , L0001805 , L0001806 , L0001807 , L0001808 , L0001809 , L0001810 , L0001811 , L0001812 , L0001813 , L0001814 , L0001815 , L0001816 , L0001817 , L0001818 , L0001819 , L0001820 , L0001821 , L0001822 , L0001823 , L0001824 , L0001825 , L0001826 , L0001827 , L0001828 , L0001829 , L0001830 , L0001831 , . . . ,

*** DISCRETE CARTESIAN RECEPTOR POINTS ***

** CONC OF PM_10 IN MICROGRAMS/M**3 **

X-COORD (M)	Y-COORD (M)	CONC	X-COORD (M)	Y-COORD (M)	CONC
397475.00	3768539.00	0.35736	397525.00	3768539.00	0.30425
396425.00	3768589.00	0.18977	396475.00	3768589.00	0.22601
396525.00	3768589.00	0.28121	396575.00	3768589.00	0.35538
396625.00	3768589.00	0.45319	396825.00	3768589.00	0.85592
396875.00	3768589.00	0.87482	396925.00	3768589.00	0.83440
396975.00	3768589.00	0.80265	397025.00	3768589.00	0.75199
397075.00	3768589.00	0.69094	397125.00	3768589.00	0.64866
397175.00	3768589.00	0.60413	397225.00	3768589.00	0.55608
397275.00	3768589.00	0.50932	397325.00	3768589.00	0.47883
397375.00	3768589.00	0.42350	397425.00	3768589.00	0.37565
397475.00	3768589.00	0.32679	397525.00	3768589.00	0.28315
396425.00	3768639.00	0.17273	396475.00	3768639.00	0.20106
396525.00	3768639.00	0.24580	396575.00	3768639.00	0.29859
396625.00	3768639.00	0.36407	396675.00	3768639.00	0.44139
396725.00	3768639.00	0.52212	396775.00	3768639.00	0.58859

396825.00	3768639.00	0.63827	396875.00	3768639.00	0.65474
396925.00	3768639.00	0.64800	396975.00	3768639.00	0.63420
397025.00	3768639.00	0.60564	397075.00	3768639.00	0.56653
397125.00	3768639.00	0.52300	397175.00	3768639.00	0.50494
397225.00	3768639.00	0.47368	397275.00	3768639.00	0.44268
397325.00	3768639.00	0.41223	397375.00	3768639.00	0.37105
397425.00	3768639.00	0.33336	397475.00	3768639.00	0.29840
397525.00	3768639.00	0.26254	396425.00	3768689.00	0.15679
396475.00	3768689.00	0.17915	396525.00	3768689.00	0.21013
396575.00	3768689.00	0.25046	396625.00	3768689.00	0.29472
396675.00	3768689.00	0.34707	396725.00	3768689.00	0.39678
396775.00	3768689.00	0.44331	396825.00	3768689.00	0.47913
396875.00	3768689.00	0.50281	396925.00	3768689.00	0.50849
396975.00	3768689.00	0.50320	397025.00	3768689.00	0.49101
397075.00	3768689.00	0.47523	397125.00	3768689.00	0.44161
397175.00	3768689.00	0.42805	397225.00	3768689.00	0.40958
397275.00	3768689.00	0.38444	397325.00	3768689.00	0.35866
397375.00	3768689.00	0.33033	397425.00	3768689.00	0.29951
397475.00	3768689.00	0.26958	397525.00	3768689.00	0.24114

*** MODELOPTs: RegDFAULT CONC ELEV URBAN ADJ_U*

*** THE PERIOD (43848 HRS) AVERAGE CONCENTRATION VALUES FOR SOURCE GROUP: STT ***
INCLUDING SOURCE(S): STT ,

*** DISCRETE CARTESIAN RECEPTOR POINTS ***

** CONC OF PM_10 IN MICROGRAMS/M**3 **

X-COORD (M)	Y-COORD (M)	CONC	X-COORD (M)	Y-COORD (M)	CONC
396166.28	3767377.28	0.05186	396266.28	3767377.28	0.05861
396366.28	3767377.28	0.06918	396466.28	3767377.28	0.08021
396566.28	3767377.28	0.09423	396666.28	3767377.28	0.10428
396766.28	3767377.28	0.11136	396866.28	3767377.28	0.11795
396966.28	3767377.28	0.12631	397066.28	3767377.28	0.13080
397166.28	3767377.28	0.12760	397266.28	3767377.28	0.11898
397366.28	3767377.28	0.11344	397466.28	3767377.28	0.10552
397566.28	3767377.28	0.09327	397666.28	3767377.28	0.08167
397766.28	3767377.28	0.06897	397866.28	3767377.28	0.05989
396166.28	3767477.28	0.05586	396266.28	3767477.28	0.06281
396366.28	3767477.28	0.07622	396466.28	3767477.28	0.09166
396566.28	3767477.28	0.10925	396666.28	3767477.28	0.12647
396766.28	3767477.28	0.14320	396866.28	3767477.28	0.15821
396966.28	3767477.28	0.17384	397066.28	3767477.28	0.18301
397166.28	3767477.28	0.17985	397266.28	3767477.28	0.16579
397366.28	3767477.28	0.15071	397466.28	3767477.28	0.13614
397566.28	3767477.28	0.11688	397666.28	3767477.28	0.09828
397766.28	3767477.28	0.08258	397866.28	3767477.28	0.06995
396166.28	3767577.28	0.05811	396266.28		

3767577.28 0.06721
396366.28 3767577.28 0.08125 396466.28
3767577.28 0.10075
396566.28 3767577.28 0.12663 396666.28
3767577.28 0.15815
396766.28 3767577.28 0.18306 396866.28
3767577.28 0.22126
396966.28 3767577.28 0.25202 397066.28
3767577.28 0.26987
397166.28 3767577.28 0.27114 397266.28
3767577.28 0.24661
397366.28 3767577.28 0.21205 397466.28
3767577.28 0.18257
397566.28 3767577.28 0.14832 397666.28
3767577.28 0.11999
397766.28 3767577.28 0.09734 397866.28
3767577.28 0.08020
396166.28 3767677.28 0.06099 396266.28
3767677.28 0.07126
396366.28 3767677.28 0.08770 396466.28
3767677.28 0.11179
396566.28 3767677.28 0.14294 396666.28
3767677.28 0.17848
396766.28 3767677.28 0.23866 396866.28
3767677.28 0.32509
396966.28 3767677.28 0.41835 397066.28
3767677.28 0.46115
397166.28 3767677.28 0.45810 397266.28
3767677.28 0.41852
397366.28 3767677.28 0.32096 397466.28
3767677.28 0.25533
397566.28 3767677.28 0.19082 397666.28
3767677.28 0.14545
397766.28 3767677.28 0.11360 397866.28
3767677.28 0.09034
396166.28 3767777.28 0.06262 396266.28
3767777.28 0.07596
396366.28 3767777.28 0.09292 396466.28
3767777.28 0.11832
396566.28 3767777.28 0.15155 396666.28
3767777.28 0.20593
396766.28 3767777.28 0.30612 396866.28
3767777.28 0.47825

*** MODELOPTs: RegDFAULT CONC ELEV URBAN ADJ_U*

*** THE PERIOD (43848 HRS) AVERAGE CONCENTRATION VALUES FOR SOURCE GROUP: STT ***
INCLUDING SOURCE(S): STT ,

*** DISCRETE CARTESIAN RECEPTOR POINTS ***

** CONC OF PM_10 IN MICROGRAMS/M**3 **

X-COORD (M)	Y-COORD (M)	CONC	X-COORD (M)	Y-COORD (M)	CONC
396966.28	3767777.28	0.73293	397066.28	3767777.28	0.95137
397166.28	3767777.28	0.96217	397266.28	3767777.28	0.78972
397366.28	3767777.28	0.52183	397466.28	3767777.28	0.35819
397566.28	3767777.28	0.24454	397666.28	3767777.28	0.17370
397766.28	3767777.28	0.13084	397866.28	3767777.28	0.10169
396166.28	3767877.28	0.06332	396266.28	3767877.28	0.07726
396366.28	3767877.28	0.09611	396466.28	3767877.28	0.12157
396566.28	3767877.28	0.15952	397466.28	3767877.28	0.47322
397566.28	3767877.28	0.30315	397666.28	3767877.28	0.20599
397766.28	3767877.28	0.14871	397866.28	3767877.28	0.11114
396166.28	3767977.28	0.06252	396266.28	3767977.28	0.07670
396366.28	3767977.28	0.09560	396466.28	3767977.28	0.12080
397466.28	3767977.28	0.64339	397566.28	3767977.28	0.36780
397666.28	3767977.28	0.23704	397766.28	3767977.28	0.16253
397866.28	3767977.28	0.11772	396166.28	3768077.28	0.06303
396266.28	3768077.28	0.07503	396366.28	3768077.28	0.09313
396466.28	3768077.28	0.11966	397466.28	3768077.28	0.79328
397566.28	3768077.28	0.42488	397666.28	3768077.28	0.26526
397766.28	3768077.28	0.18232	397866.28		

3768077.28 0.13044
396166.28 3768177.28 0.06183 396266.28
3768177.28 0.07382
396366.28 3768177.28 0.09106 396466.28
3768177.28 0.11439
397466.28 3768177.28 0.81284 397566.28
3768177.28 0.46062
397666.28 3768177.28 0.28842 397766.28
3768177.28 0.19984
397866.28 3768177.28 0.14063 396166.28
3768277.28 0.05990
396266.28 3768277.28 0.07014 396366.28
3768277.28 0.08571
396466.28 3768277.28 0.10663 397366.28
3768277.28 1.13366
397466.28 3768277.28 0.70467 397566.28
3768277.28 0.45585
397666.28 3768277.28 0.29718 397766.28
3768277.28 0.20627
397866.28 3768277.28 0.15302 396166.28
3768377.28 0.05712
396266.28 3768377.28 0.06644 396366.28
3768377.28 0.07982
396466.28 3768377.28 0.09785 397266.28
3768377.28 0.91440
397366.28 3768377.28 0.76501 397466.28
3768377.28 0.56808
397566.28 3768377.28 0.41189 397666.28
3768377.28 0.29497
397766.28 3768377.28 0.21311 397866.28
3768377.28 0.16277
396166.28 3768477.28 0.05381 396266.28
3768477.28 0.06257
396366.28 3768477.28 0.07435 396466.28
3768477.28 0.08845
397166.28 3768477.28 0.51003 397266.28
3768477.28 0.57767
397366.28 3768477.28 0.53756 397466.28
3768477.28 0.44501
397566.28 3768477.28 0.33929 397666.28
3768477.28 0.25936
397766.28 3768477.28 0.20589 397866.28
3768477.28 0.15805

*** MODELOPTs: RegDFAULT CONC ELEV URBAN ADJ_U*

*** THE PERIOD (43848 HRS) AVERAGE CONCENTRATION VALUES FOR SOURCE GROUP: STT ***
INCLUDING SOURCE(S): STT ,

*** DISCRETE CARTESIAN RECEPTOR POINTS ***

** CONC OF PM_10 IN MICROGRAMS/M**3 **

X-COORD (M)	Y-COORD (M)	CONC	X-COORD (M)	Y-COORD (M)	CONC
396166.28	3768577.28	0.04937	396266.28	3768577.28	0.05816
396366.28	3768577.28	0.06803	396466.28	3768577.28	0.07982
396566.28	3768577.28	0.09749	396866.28	3768577.28	0.18986
396966.28	3768577.28	0.23839	397066.28	3768577.28	0.29272
397166.28	3768577.28	0.35118	397266.28	3768577.28	0.38341
397366.28	3768577.28	0.38152	397466.28	3768577.28	0.33932
397566.28	3768577.28	0.28143	397666.28	3768577.28	0.22669
397766.28	3768577.28	0.18041	397866.28	3768577.28	0.14618
396166.28	3768677.28	0.04582	396266.28	3768677.28	0.05273
396366.28	3768677.28	0.06190	396466.28	3768677.28	0.07172
396566.28	3768677.28	0.08572	396666.28	3768677.28	0.10306
396766.28	3768677.28	0.12428	396866.28	3768677.28	0.15087
396966.28	3768677.28	0.18219	397066.28	3768677.28	0.21817
397166.28	3768677.28	0.25125	397366.28	3768677.28	0.28026
397466.28	3768677.28	0.26050	397566.28	3768677.28	0.22836
397666.28	3768677.28	0.19318	397766.28	3768677.28	0.15947
397866.28	3768677.28	0.13311	396166.28	3768777.28	0.04296
396266.28	3768777.28	0.04855	396366.28	3768777.28	0.05645
396466.28	3768777.28	0.06496	396566.28		

3768777.28 0.07510
396666.28 3768777.28 0.08828 396766.28
3768777.28 0.10431
396866.28 3768777.28 0.12300 396966.28
3768777.28 0.14422
397066.28 3768777.28 0.16781 397166.28
3768777.28 0.18926
397266.28 3768777.28 0.20742 397366.28
3768777.28 0.21142
397466.28 3768777.28 0.20101 397566.28
3768777.28 0.18202
397666.28 3768777.28 0.15990 397766.28
3768777.28 0.13787
397866.28 3768777.28 0.11863 396166.28
3768877.28 0.03971
396266.28 3768877.28 0.04503 396366.28
3768877.28 0.05073
396466.28 3768877.28 0.05892 396566.28
3768877.28 0.06726
396666.28 3768877.28 0.07691 396766.28
3768877.28 0.08899
396866.28 3768877.28 0.10451 396966.28
3768877.28 0.11948
397066.28 3768877.28 0.13426 397166.28
3768877.28 0.14904
397266.28 3768877.28 0.16141 397366.28
3768877.28 0.16485
397466.28 3768877.28 0.16063 397566.28
3768877.28 0.14968
397666.28 3768877.28 0.13411 397766.28
3768877.28 0.11870
397866.28 3768877.28 0.10490 396425.00
3767739.00 0.10551
396475.00 3767739.00 0.11938 396525.00
3767739.00 0.13375
396575.00 3767739.00 0.15398 396625.00
3767739.00 0.17225
396675.00 3767739.00 0.20068 396725.00
3767739.00 0.24434
396775.00 3767739.00 0.28637 396825.00
3767739.00 0.35040
396875.00 3767739.00 0.43120 396925.00
3767739.00 0.51445

```
 *** AERMOD - VERSION 22112  ***   *** C:\Lakes\Project Files\Garvey\Garvey.isc
***        03/04/24
 *** AERMET - VERSION  16216 ***   ***
***        13:00:54

PAGE 534
 *** MODELOPTs:    RegDFAULT  CONC  ELEV  URBAN  ADJ_U*

                              *** THE PERIOD ( 43848 HRS) AVERAGE CONCENTRATION
VALUES FOR SOURCE GROUP: STT      ***
                                  INCLUDING SOURCE(S):     STT         ,

                                            *** DISCRETE CARTESIAN RECEPTOR
POINTS ***

                                       ** CONC OF PM_10    IN MICROGRAMS/M**3
**

       X-COORD (M)   Y-COORD (M)        CONC                       X-COORD (M)
Y-COORD (M)        CONC
 - - - - - - - - - - - - - - - - - - - - - - - - - - - - - - - - - - - - - - - - - -
- - - - - - - - - - - - - - - - - - - - - - - - -
         396975.00    3767739.00        0.59893                     397025.00
3767739.00        0.66754
         397075.00    3767739.00        0.70472                     397125.00
3767739.00        0.71184
         397175.00    3767739.00        0.69299                     397225.00
3767739.00        0.64508
         397275.00    3767739.00        0.59132                     397325.00
3767739.00        0.49984
         397375.00    3767739.00        0.41550                     397425.00
3767739.00        0.34845
         397475.00    3767739.00        0.30486                     397525.00
3767739.00        0.25606
         396425.00    3767789.00        0.10798                     396475.00
3767789.00        0.12143
         396525.00    3767789.00        0.13684                     396575.00
3767789.00        0.15577
         396625.00    3767789.00        0.18143                     396675.00
3767789.00        0.21606
         396725.00    3767789.00        0.26705                     396775.00
3767789.00        0.32519
         396825.00    3767789.00        0.40921                     396875.00
3767789.00        0.51703
         396925.00    3767789.00        0.64817                     396975.00
3767789.00        0.81278
         397025.00    3767789.00        0.96533                     397075.00
3767789.00        1.06647
         397125.00    3767789.00        1.09960                     397175.00
3767789.00        1.05760
         397225.00    3767789.00        0.94684                     397275.00
3767789.00        0.83058
         397325.00    3767789.00        0.67667                     397375.00
3767789.00        0.53048
         397425.00    3767789.00        0.42320                     397475.00
3767789.00        0.35924
         397525.00    3767789.00        0.29302                     396425.00
3767839.00        0.10981
         396475.00    3767839.00        0.12454                     396525.00
```

3767839.00 0.13893
396575.00 3767839.00 0.16083 396625.00
3767839.00 0.18924
396675.00 3767839.00 0.23509 396725.00
3767839.00 0.28971
396775.00 3767839.00 0.36227 396825.00
3767839.00 0.46474
396875.00 3767839.00 0.60993 396925.00
3767839.00 0.81037
396975.00 3767839.00 1.10754 397025.00
3767839.00 1.47133
397075.00 3767839.00 1.71931 397125.00
3767839.00 1.85766
397175.00 3767839.00 1.81248 397225.00
3767839.00 1.58341
397275.00 3767839.00 1.25906 397325.00
3767839.00 0.94892
397375.00 3767839.00 0.68715 397475.00
3767839.00 0.40440
397525.00 3767839.00 0.33331 396425.00
3767889.00 0.11076
396475.00 3767889.00 0.12298 396525.00
3767889.00 0.14118
396575.00 3767889.00 0.16610 397475.00
3767889.00 0.47825
397525.00 3767889.00 0.37547 396425.00
3767939.00 0.11103
396475.00 3767939.00 0.12357 396525.00
3767939.00 0.14284
397475.00 3767939.00 0.55241 397525.00
3767939.00 0.41930
396425.00 3767989.00 0.10892 396475.00
3767989.00 0.12363
397475.00 3767989.00 0.62850 397525.00
3767989.00 0.46661
396425.00 3768039.00 0.10799 396475.00
3768039.00 0.12321
397475.00 3768039.00 0.69765 397525.00
3768039.00 0.50674
396425.00 3768089.00 0.10686 396475.00
3768089.00 0.12210
397475.00 3768089.00 0.76067 397525.00
3768089.00 0.54338

*** MODELOPTs: RegDFAULT CONC ELEV URBAN ADJ_U*

*** THE PERIOD (43848 HRS) AVERAGE CONCENTRATION VALUES FOR SOURCE GROUP: STT ***
INCLUDING SOURCE(S): STT ,

*** DISCRETE CARTESIAN RECEPTOR POINTS ***

** CONC OF PM_10 IN MICROGRAMS/M**3 **

X-COORD (M)	Y-COORD (M)	CONC	X-COORD (M)	Y-COORD (M)	CONC
396425.00	3768139.00	0.10694	396475.00	3768139.00	0.11942
397425.00	3768139.00	1.10019	397475.00	3768139.00	0.77660
397525.00	3768139.00	0.56911	396425.00	3768189.00	0.10401
396475.00	3768189.00	0.11607	397375.00	3768189.00	1.43711
397425.00	3768189.00	1.00768	397475.00	3768189.00	0.76648
397525.00	3768189.00	0.57931	396425.00	3768239.00	0.10061
396475.00	3768239.00	0.11213	397375.00	3768239.00	1.25035
397425.00	3768239.00	0.88846	397475.00	3768239.00	0.68579
397525.00	3768239.00	0.54202	396425.00	3768289.00	0.09654
396475.00	3768289.00	0.10776	397325.00	3768289.00	1.25741
397375.00	3768289.00	1.04110	397425.00	3768289.00	0.84751
397475.00	3768289.00	0.67742	397525.00	3768289.00	0.53878
396425.00	3768339.00	0.09307	396475.00	3768339.00	0.10318
396525.00	3768339.00	0.11652	397275.00	3768339.00	1.09827
397325.00	3768339.00	0.99865	397375.00	3768339.00	0.86181
397425.00	3768339.00	0.73163	397475.00	3768339.00	0.61122
397525.00	3768339.00	0.50813	396425.00	3768389.00	0.08891
396475.00	3768389.00	0.09834	396525.00	3768389.00	0.11028
397225.00	3768389.00	0.86877	397275.00		

3768389.00 0.85677
397325.00 3768389.00 0.80182 397375.00
3768389.00 0.71562
397425.00 3768389.00 0.62325 397475.00
3768389.00 0.53597
397525.00 3768389.00 0.45649 396425.00
3768439.00 0.08559
396475.00 3768439.00 0.09360 396525.00
3768439.00 0.10416
397175.00 3768439.00 0.61957 397225.00
3768439.00 0.67963
397275.00 3768439.00 0.67905 397325.00
3768439.00 0.65593
397375.00 3768439.00 0.60756 397425.00
3768439.00 0.54654
397475.00 3768439.00 0.47236 397525.00
3768439.00 0.41007
396425.00 3768489.00 0.08133 396475.00
3768489.00 0.08876
396525.00 3768489.00 0.09845 397075.00
3768489.00 0.40178
397125.00 3768489.00 0.44810 397175.00
3768489.00 0.49348
397225.00 3768489.00 0.53151 397275.00
3768489.00 0.54970
397325.00 3768489.00 0.54114 397375.00
3768489.00 0.50951
397425.00 3768489.00 0.46820 397475.00
3768489.00 0.42294
397525.00 3768489.00 0.37622 396425.00
3768539.00 0.07729
396475.00 3768539.00 0.08434 396525.00
3768539.00 0.09293
396575.00 3768539.00 0.10417 397025.00
3768539.00 0.30103
397075.00 3768539.00 0.33711 397125.00
3768539.00 0.37184
397175.00 3768539.00 0.40604 397225.00
3768539.00 0.43104
397275.00 3768539.00 0.45282 397325.00
3768539.00 0.44960
397375.00 3768539.00 0.42983 397425.00
3768539.00 0.40290

*** MODELOPTs: RegDFAULT CONC ELEV URBAN ADJ_U*

*** THE PERIOD (43848 HRS) AVERAGE CONCENTRATION VALUES FOR SOURCE GROUP: STT ***
INCLUDING SOURCE(S): STT ,

*** DISCRETE CARTESIAN RECEPTOR POINTS ***

** CONC OF PM_10 IN MICROGRAMS/M**3 **

X-COORD (M)	Y-COORD (M)	CONC	X-COORD (M)	Y-COORD (M)	CONC
397475.00	3768539.00	0.36989	397525.00	3768539.00	0.33499
396425.00	3768589.00	0.07376	396475.00	3768589.00	0.08005
396525.00	3768589.00	0.08834	396575.00	3768589.00	0.09780
396625.00	3768589.00	0.10858	396825.00	3768589.00	0.16832
396875.00	3768589.00	0.18886	396925.00	3768589.00	0.20932
396975.00	3768589.00	0.23548	397025.00	3768589.00	0.26217
397075.00	3768589.00	0.28729	397125.00	3768589.00	0.31631
397175.00	3768589.00	0.34122	397225.00	3768589.00	0.35862
397275.00	3768589.00	0.36830	397325.00	3768589.00	0.37666
397375.00	3768589.00	0.36485	397425.00	3768589.00	0.34853
397475.00	3768589.00	0.32457	397525.00	3768589.00	0.29816
396425.00	3768639.00	0.07034	396475.00	3768639.00	0.07581
396525.00	3768639.00	0.08360	396575.00	3768639.00	0.09177
396625.00	3768639.00	0.10107	396675.00	3768639.00	0.11174
396725.00	3768639.00	0.12381	396775.00	3768639.00	0.13705
396825.00	3768639.00	0.15216	396875.00	3768639.00	0.16824
396925.00	3768639.00	0.18570	396975.00	3768639.00	0.20594
397025.00	3768639.00	0.22665	397075.00	3768639.00	0.24612
397125.00	3768639.00	0.26290	397175.00		

3768639.00 0.28700
397225.00 3768639.00 0.30271 397275.00
3768639.00 0.31341
397325.00 3768639.00 0.31843 397375.00
3768639.00 0.31180
397425.00 3768639.00 0.30064 397475.00
3768639.00 0.28592
397525.00 3768639.00 0.26591 396425.00
3768689.00 0.06700
396475.00 3768689.00 0.07180 396525.00
3768689.00 0.07809
396575.00 3768689.00 0.08562 396625.00
3768689.00 0.09356
396675.00 3768689.00 0.10282 396725.00
3768689.00 0.11266
396775.00 3768689.00 0.12378 396825.00
3768689.00 0.13603
396875.00 3768689.00 0.14976 396925.00
3768689.00 0.16419
396975.00 3768689.00 0.17983 397025.00
3768689.00 0.19666
397075.00 3768689.00 0.21440 397125.00
3768689.00 0.22681
397175.00 3768689.00 0.24517 397225.00
3768689.00 0.25979
397275.00 3768689.00 0.26842 397325.00
3768689.00 0.27251
397375.00 3768689.00 0.27069 397425.00
3768689.00 0.26278
397475.00 3768689.00 0.25098 397525.00
3768689.00 0.23643

*** MODELOPTs: RegDFAULT CONC ELEV URBAN ADJ_U*

*** THE PERIOD (43848 HRS) AVERAGE CONCENTRATION VALUES FOR SOURCE GROUP: HAUL1 ***
INCLUDING SOURCE(S): L0003711 , L0003712 , L0003713 , L0003714 , L0003715 , L0003716 , L0003717 , L0003718 , L0003719 , L0003720 , L0003721 , L0003722 , L0003723 , L0003724 , L0003725 , L0003726 , L0003727 , L0003728 , L0003729 , L0003730 , L0003731 , L0003732 , L0003733 , L0003734 , L0003735 , L0003736 , L0003737 , L0003738 , . . . ,

*** DISCRETE CARTESIAN RECEPTOR POINTS ***

** CONC OF PM_10 IN MICROGRAMS/M**3 **

X-COORD (M)	Y-COORD (M)	CONC	X-COORD (M)	Y-COORD (M)	CONC
396166.28	3767377.28	0.03325	396266.28	3767377.28	0.03532
396366.28	3767377.28	0.03819	396466.28	3767377.28	0.04060
396566.28	3767377.28	0.04465	396666.28	3767377.28	0.04463
396766.28	3767377.28	0.04533	396866.28	3767377.28	0.04615
396966.28	3767377.28	0.04767	397066.28	3767377.28	0.04829
397166.28	3767377.28	0.04800	397266.28	3767377.28	0.04761
397366.28	3767377.28	0.04683	397466.28	3767377.28	0.04396
397566.28	3767377.28	0.04295	397666.28	3767377.28	0.04142
397766.28	3767377.28	0.04070	397866.28	3767377.28	0.03834
396166.28	3767477.28	0.03599	396266.28	3767477.28	0.03806
396366.28	3767477.28	0.04181	396466.28	3767477.28	0.04603
396566.28	3767477.28	0.04909	396666.28	3767477.28	0.05089
396766.28	3767477.28	0.05278	396866.28	3767477.28	0.05437
396966.28	3767477.28	0.05651	397066.28	3767477.28	0.05774
397166.28	3767477.28	0.05729	397266.28	3767477.28	0.05703

397366.28 3767477.28 0.05602 397466.28 3767477.28 0.05269
397566.28 3767477.28 0.05011 397666.28 3767477.28 0.04830
397766.28 3767477.28 0.04616 397866.28 3767477.28 0.04353
396166.28 3767577.28 0.03780 396266.28 3767577.28 0.04108
396366.28 3767577.28 0.04524 396466.28 3767577.28 0.04985
396566.28 3767577.28 0.05677 396666.28 3767577.28 0.06117
396766.28 3767577.28 0.06150 396866.28 3767577.28 0.06532
396966.28 3767577.28 0.06817 397066.28 3767577.28 0.07023
397166.28 3767577.28 0.07060 397266.28 3767577.28 0.06998
397366.28 3767577.28 0.06864 397466.28 3767577.28 0.06384
397566.28 3767577.28 0.06024 397666.28 3767577.28 0.05640
397766.28 3767577.28 0.05301 397866.28 3767577.28 0.04925
396166.28 3767677.28 0.04143 396266.28 3767677.28 0.04417
396366.28 3767677.28 0.04933 396466.28 3767677.28 0.05903
396566.28 3767677.28 0.06415 396666.28 3767677.28 0.06668
396766.28 3767677.28 0.07326 396866.28 3767677.28 0.08061
396966.28 3767677.28 0.08759 397066.28 3767677.28 0.08913
397166.28 3767677.28 0.09008 397266.28 3767677.28 0.08738
397366.28 3767677.28 0.08677 397466.28 3767677.28 0.07773
397566.28 3767677.28 0.07372 397666.28 3767677.28 0.06814
397766.28 3767677.28 0.06219 397866.28 3767677.28 0.05713
396166.28 3767777.28 0.04411 396266.28 3767777.28 0.05219
396366.28 3767777.28 0.05542 396466.28 3767777.28 0.06292
396566.28 3767777.28 0.06808 396666.28 3767777.28 0.07689
396766.28 3767777.28 0.08853 396866.28 3767777.28 0.10564

*** MODELOPTs: RegDFAULT CONC ELEV URBAN ADJ_U*

*** THE PERIOD (43848 HRS) AVERAGE CONCENTRATION VALUES FOR SOURCE GROUP: HAUL1 ***
INCLUDING SOURCE(S): L0003711 , L0003712 , L0003713 , L0003714 , L0003715 , L0003716 , L0003717 , L0003718 , L0003719 , L0003720 , L0003721 , L0003722 , L0003723 , L0003724 , L0003725 , L0003726 , L0003727 , L0003728 , L0003729 , L0003730 , L0003731 , L0003732 , L0003733 , L0003734 , L0003735 , L0003736 , L0003737 , L0003738 , . . . ,

*** DISCRETE CARTESIAN RECEPTOR POINTS ***

** CONC OF PM_10 IN MICROGRAMS/M**3 **

X-COORD (M)	Y-COORD (M)	CONC	X-COORD (M)	Y-COORD (M)	CONC
396966.28	3767777.28	0.11535	397066.28	3767777.28	0.11796
397166.28	3767777.28	0.12030	397266.28	3767777.28	0.11763
397366.28	3767777.28	0.11462	397466.28	3767777.28	0.10018
397566.28	3767777.28	0.09099	397666.28	3767777.28	0.08451
397766.28	3767777.28	0.07364	397866.28	3767777.28	0.06506
396166.28	3767877.28	0.04606	396266.28	3767877.28	0.05512
396366.28	3767877.28	0.06301	396466.28	3767877.28	0.06687
396566.28	3767877.28	0.07573	397466.28	3767877.28	0.14944
397566.28	3767877.28	0.11399	397666.28	3767877.28	0.09238
397766.28	3767877.28	0.07908	397866.28	3767877.28	0.07729
396166.28	3767977.28	0.04603	396266.28	3767977.28	0.05512
396366.28	3767977.28	0.06412	396466.28	3767977.28	0.07082
397466.28	3767977.28	0.18781	397566.28	3767977.28	0.14521
397666.28	3767977.28	0.11506	397766.28	3767977.28	0.11271
397866.28	3767977.28	0.09518	396166.28	3768077.28	0.05138

396266.28	3768077.28	0.05605	396366.28	3768077.28	0.06570
396466.28	3768077.28	0.07800	397466.28	3768077.28	0.35760
397566.28	3768077.28	0.26805	397666.28	3768077.28	0.18797
397766.28	3768077.28	0.13861	397866.28	3768077.28	0.11112
396166.28	3768177.28	0.05234	396266.28	3768177.28	0.06061
396366.28	3768177.28	0.07244	396466.28	3768177.28	0.08367
397466.28	3768177.28	0.84236	397566.28	3768177.28	0.40083
397666.28	3768177.28	0.24965	397766.28	3768177.28	0.17360
397866.28	3768177.28	0.13019	396166.28	3768277.28	0.04981
396266.28	3768277.28	0.06002	396366.28	3768277.28	0.07242
396466.28	3768277.28	0.08736	397366.28	3768277.28	7.29156
397466.28	3768277.28	1.34042	397566.28	3768277.28	0.56045
397666.28	3768277.28	0.31536	397766.28	3768277.28	0.20697
397866.28	3768277.28	0.15055	396166.28	3768377.28	0.04600
396266.28	3768377.28	0.05946	396366.28	3768377.28	0.07180
396466.28	3768377.28	0.08869	397266.28	3768377.28	11.46312
397366.28	3768377.28	5.08413	397466.28	3768377.28	1.55587
397566.28	3768377.28	0.69780	397666.28	3768377.28	0.38890
397766.28	3768377.28	0.24900	397866.28	3768377.28	0.17068
396166.28	3768477.28	0.04382	396266.28	3768477.28	0.05472
396366.28	3768477.28	0.06501	396466.28	3768477.28	0.08625
397166.28	3768477.28	1.81467	397266.28	3768477.28	11.57790
397366.28	3768477.28	4.61244	397466.28	3768477.28	1.41928
397566.28	3768477.28	0.78704	397666.28	3768477.28	0.44931
397766.28	3768477.28	0.27327	397866.28	3768477.28	0.19471

*** MODELOPTs: RegDFAULT CONC ELEV URBAN ADJ_U*

*** THE PERIOD (43848 HRS) AVERAGE CONCENTRATION VALUES FOR SOURCE GROUP: HAUL1 ***
INCLUDING SOURCE(S): L0003711 , L0003712 , L0003713 , L0003714 , L0003715 , L0003716 , L0003717 , L0003718 , L0003719 , L0003720 , L0003721 , L0003722 , L0003723 , L0003724 , L0003725 , L0003726 , L0003727 , L0003728 , L0003729 , L0003730 , L0003731 , L0003732 , L0003733 , L0003734 , L0003735 , L0003736 , L0003737 , L0003738 , . . . ,

*** DISCRETE CARTESIAN RECEPTOR POINTS ***

** CONC OF PM_10 IN MICROGRAMS/M**3 **

X-COORD (M)	Y-COORD (M)	CONC	X-COORD (M)	Y-COORD (M)	CONC
396166.28	3768577.28	0.04848	396266.28	3768577.28	0.04872
396366.28	3768577.28	0.05823	396466.28	3768577.28	0.08141
396566.28	3768577.28	0.09643	396866.28	3768577.28	0.29031
396966.28	3768577.28	0.47299	397066.28	3768577.28	0.85009
397166.28	3768577.28	2.04990	397266.28	3768577.28	11.04616
397366.28	3768577.28	4.54832	397466.28	3768577.28	1.36712
397566.28	3768577.28	0.77106	397666.28	3768577.28	0.47681
397766.28	3768577.28	0.31150	397866.28	3768577.28	0.21329
396166.28	3768677.28	0.04780	396266.28	3768677.28	0.05454
396366.28	3768677.28	0.05647	396466.28	3768677.28	0.07743
396566.28	3768677.28	0.09475	396666.28	3768677.28	0.12709
396766.28	3768677.28	0.18068	396866.28	3768677.28	0.26822
396966.28	3768677.28	0.43427	397066.28	3768677.28	0.82604
397166.28	3768677.28	2.20685	397366.28	3768677.28	3.91847
397466.28	3768677.28	1.48185	397566.28	3768677.28	0.77008

397666.28 3768677.28 0.47821 397766.28
3768677.28 0.32625
397866.28 3768677.28 0.22568 396166.28
3768777.28 0.04558
396266.28 3768777.28 0.05312 396366.28
3768777.28 0.05535
396466.28 3768777.28 0.07191 396566.28
3768777.28 0.09469
396666.28 3768777.28 0.12366 396766.28
3768777.28 0.16796
396866.28 3768777.28 0.24217 396966.28
3768777.28 0.38036
397066.28 3768777.28 0.69599 397166.28
3768777.28 1.72466
397266.28 3768777.28 14.35261 397366.28
3768777.28 4.73338
397466.28 3768777.28 1.55887 397566.28
3768777.28 0.81025
397666.28 3768777.28 0.49349 397766.28
3768777.28 0.32627
397866.28 3768777.28 0.22948 396166.28
3768877.28 0.04517
396266.28 3768877.28 0.05064 396366.28
3768877.28 0.06059
396466.28 3768877.28 0.06756 396566.28
3768877.28 0.08748
396666.28 3768877.28 0.11479 396766.28
3768877.28 0.15164
396866.28 3768877.28 0.20394 396966.28
3768877.28 0.31359
397066.28 3768877.28 0.52685 397166.28
3768877.28 1.04780
397266.28 3768877.28 2.98496 397366.28
3768877.28 4.46934
397466.28 3768877.28 1.38586 397566.28
3768877.28 0.73284
397666.28 3768877.28 0.45443 397766.28
3768877.28 0.31023
397866.28 3768877.28 0.22529 396425.00
3767739.00 0.06013
396475.00 3767739.00 0.06411 396525.00
3767739.00 0.06321
396575.00 3767739.00 0.06735 396625.00
3767739.00 0.06945
396675.00 3767739.00 0.07341 396725.00
3767739.00 0.07857
396775.00 3767739.00 0.08251 396825.00
3767739.00 0.08851
396875.00 3767739.00 0.09685 396925.00
3767739.00 0.10094

*** MODELOPTs: RegDFAULT CONC ELEV URBAN ADJ_U*

*** THE PERIOD (43848 HRS) AVERAGE CONCENTRATION VALUES FOR SOURCE GROUP: HAUL1 ***
INCLUDING SOURCE(S): L0003711 , L0003712 , L0003713 , L0003714 , L0003715 , L0003716 , L0003717 , L0003718 , L0003719 , L0003720 , L0003721 , L0003722 , L0003723 , L0003724 , L0003725 , L0003726 , L0003727 , L0003728 , L0003729 , L0003730 , L0003731 , L0003732 , L0003733 , L0003734 , L0003735 , L0003736 , L0003737 , L0003738 , . . . ,

*** DISCRETE CARTESIAN RECEPTOR POINTS ***

** CONC OF PM_10 IN MICROGRAMS/M**3 **

X-COORD (M)	Y-COORD (M)	CONC	X-COORD (M)	Y-COORD (M)	CONC
396975.00	3767739.00	0.10354	397025.00	3767739.00	0.10467
397075.00	3767739.00	0.10556	397125.00	3767739.00	0.10651
397175.00	3767739.00	0.10704	397225.00	3767739.00	0.10667
397275.00	3767739.00	0.10407	397325.00	3767739.00	0.10338
397375.00	3767739.00	0.10215	397425.00	3767739.00	0.09945
397475.00	3767739.00	0.09013	397525.00	3767739.00	0.08661
396425.00	3767789.00	0.06292	396475.00	3767789.00	0.06371
396525.00	3767789.00	0.06560	396575.00	3767789.00	0.06955
396625.00	3767789.00	0.07406	396675.00	3767789.00	0.07917
396725.00	3767789.00	0.08625	396775.00	3767789.00	0.09195
396825.00	3767789.00	0.10126	396875.00	3767789.00	0.10961
396925.00	3767789.00	0.11480	396975.00	3767789.00	0.11976
397025.00	3767789.00	0.12134	397075.00	3767789.00	0.12256
397125.00	3767789.00	0.12403	397175.00	3767789.00	0.12504
397225.00	3767789.00	0.12509	397275.00	3767789.00	0.12221

397325.00 3767789.00 0.11988 397375.00 3767789.00 0.11872
397425.00 3767789.00 0.11558 397475.00 3767789.00 0.10249
397525.00 3767789.00 0.09873 396425.00 3767839.00 0.06551
396475.00 3767839.00 0.06821 396525.00 3767839.00 0.06869
396575.00 3767839.00 0.07355 396625.00 3767839.00 0.07891
396675.00 3767839.00 0.08808 396725.00 3767839.00 0.09703
396775.00 3767839.00 0.10543 396825.00 3767839.00 0.11539
396875.00 3767839.00 0.12458 396925.00 3767839.00 0.13157
396975.00 3767839.00 0.13919 397025.00 3767839.00 0.14331
397075.00 3767839.00 0.14360 397125.00 3767839.00 0.14631
397175.00 3767839.00 0.14837 397225.00 3767839.00 0.14727
397275.00 3767839.00 0.14112 397325.00 3767839.00 0.13461
397375.00 3767839.00 0.13964 397475.00 3767839.00 0.12925
397525.00 3767839.00 0.10959 396425.00 3767889.00 0.06736
396475.00 3767889.00 0.06698 396525.00 3767889.00 0.07204
396575.00 3767889.00 0.07794 397475.00 3767889.00 0.14694
397525.00 3767889.00 0.12434 396425.00 3767939.00 0.06943
396475.00 3767939.00 0.06972 396525.00 3767939.00 0.07550
397475.00 3767939.00 0.15938 397525.00 3767939.00 0.14306
396425.00 3767989.00 0.06762 396475.00 3767989.00 0.07246
397475.00 3767989.00 0.18947 397525.00 3767989.00 0.16831
396425.00 3768039.00 0.06977 396475.00 3768039.00 0.07593
397475.00 3768039.00 0.26611 397525.00 3768039.00 0.24498
396425.00 3768089.00 0.07280 396475.00 3768089.00 0.08017
397475.00 3768089.00 0.37413 397525.00 3768089.00 0.33671

*** MODELOPTs: RegDFAULT CONC ELEV URBAN ADJ_U*

*** THE PERIOD (43848 HRS) AVERAGE CONCENTRATION VALUES FOR SOURCE GROUP: HAUL1 ***
INCLUDING SOURCE(S): L0003711 , L0003712 , L0003713 , L0003714 , L0003715 , L0003716 , L0003717 , L0003718 , L0003719 , L0003720 , L0003721 , L0003722 , L0003723 , L0003724 , L0003725 , L0003726 , L0003727 , L0003728 , L0003729 , L0003730 , L0003731 , L0003732 , L0003733 , L0003734 , L0003735 , L0003736 , L0003737 , L0003738 , . . . ,

*** DISCRETE CARTESIAN RECEPTOR POINTS ***

** CONC OF PM_10 IN MICROGRAMS/M**3 **

X-COORD (M)	Y-COORD (M)	CONC	X-COORD (M)	Y-COORD (M)	CONC
396425.00	3768139.00	0.08148	396475.00	3768139.00	0.08287
397425.00	3768139.00	0.85966	397475.00	3768139.00	0.60066
397525.00	3768139.00	0.43343	396425.00	3768189.00	0.08199
396475.00	3768189.00	0.08547	397375.00	3768189.00	5.48262
397425.00	3768189.00	1.51163	397475.00	3768189.00	0.83170
397525.00	3768189.00	0.54649	396425.00	3768239.00	0.08215
396475.00	3768239.00	0.08757	397375.00	3768239.00	8.02197
397425.00	3768239.00	1.94606	397475.00	3768239.00	0.99757
397525.00	3768239.00	0.64562	396425.00	3768289.00	0.08142
396475.00	3768289.00	0.08914	397325.00	3768289.00	21.40250
397375.00	3768289.00	5.58177	397425.00	3768289.00	2.40143
397475.00	3768289.00	1.27677	397525.00	3768289.00	0.79073
396425.00	3768339.00	0.08178	396475.00	3768339.00	0.09017
396525.00	3768339.00	0.10203	397275.00	3768339.00	17.34176
397325.00	3768339.00	12.75596	397375.00	3768339.00	4.61773

397425.00 3768339.00 2.37416 397475.00
3768339.00 1.38551
397525.00 3768339.00 0.88792 396425.00
3768389.00 0.08091
396475.00 3768389.00 0.09011 396525.00
3768389.00 0.10170
397225.00 3768389.00 4.02594 397275.00
3768389.00 16.48670
397325.00 3768389.00 12.74342 397375.00
3768389.00 4.42429
397425.00 3768389.00 2.35989 397475.00
3768389.00 1.44827
397525.00 3768389.00 0.95983 396425.00
3768439.00 0.07868
396475.00 3768439.00 0.08924 396525.00
3768439.00 0.10057
397175.00 3768439.00 1.98440 397225.00
3768439.00 4.20031
397275.00 3768439.00 16.54144 397325.00
3768439.00 12.42395
397375.00 3768439.00 4.07552 397425.00
3768439.00 2.17478
397475.00 3768439.00 1.49110 397525.00
3768439.00 1.00962
396425.00 3768489.00 0.07713 396475.00
3768489.00 0.08769
396525.00 3768489.00 0.09858 397075.00
3768489.00 0.85961
397125.00 3768489.00 1.24209 397175.00
3768489.00 2.01619
397225.00 3768489.00 4.09793 397275.00
3768489.00 16.20212
397325.00 3768489.00 10.67988 397375.00
3768489.00 3.99255
397425.00 3768489.00 2.14429 397475.00
3768489.00 1.29715
397525.00 3768489.00 0.91184 396425.00
3768539.00 0.07529
396475.00 3768539.00 0.08531 396525.00
3768539.00 0.09595
396575.00 3768539.00 0.10254 397025.00
3768539.00 0.64112
397075.00 3768539.00 0.88784 397125.00
3768539.00 1.29709
397175.00 3768539.00 2.11763 397225.00
3768539.00 4.11507
397275.00 3768539.00 14.69291 397325.00
3768539.00 10.25609
397375.00 3768539.00 3.99113 397425.00
3768539.00 2.07310

*** MODELOPTs: RegDFAULT CONC ELEV URBAN ADJ_U*

*** THE PERIOD (43848 HRS) AVERAGE CONCENTRATION VALUES FOR SOURCE GROUP: HAUL1 ***
INCLUDING SOURCE(S): L0003711 , L0003712 , L0003713 , L0003714 , L0003715 , L0003716 , L0003717 , L0003718 , L0003719 , L0003720 , L0003721 , L0003722 , L0003723 , L0003724 , L0003725 , L0003726 , L0003727 , L0003728 , L0003729 , L0003730 , L0003731 , L0003732 , L0003733 , L0003734 , L0003735 , L0003736 , L0003737 , L0003738 , . . . ,

*** DISCRETE CARTESIAN RECEPTOR POINTS ***

** CONC OF PM_10 IN MICROGRAMS/M**3 **

X-COORD (M)	Y-COORD (M)	CONC	X-COORD (M)	Y-COORD (M)	CONC
397475.00	3768539.00	1.29721	397525.00	3768539.00	0.89622
396425.00	3768589.00	0.07087	396475.00	3768589.00	0.08253
396525.00	3768589.00	0.08969	396575.00	3768589.00	0.09731
396625.00	3768589.00	0.10976	396825.00	3768589.00	0.23958
396875.00	3768589.00	0.29889	396925.00	3768589.00	0.37689
396975.00	3768589.00	0.49303	397025.00	3768589.00	0.66123
397075.00	3768589.00	0.90895	397125.00	3768589.00	1.38095
397175.00	3768589.00	2.29801	397225.00	3768589.00	4.51944
397275.00	3768589.00	15.56585	397325.00	3768589.00	10.11921
397375.00	3768589.00	3.93864	397425.00	3768589.00	1.98190
397475.00	3768589.00	1.26785	397525.00	3768589.00	0.89068
396425.00	3768639.00	0.06621	396475.00	3768639.00	0.08048
396525.00	3768639.00	0.08319	396575.00	3768639.00	0.09412
396625.00	3768639.00	0.10900	396675.00	3768639.00	0.12851
396725.00	3768639.00	0.15318	396775.00	3768639.00	0.18662

396825.00	3768639.00	0.22823	396875.00	3768639.00	0.28642
396925.00	3768639.00	0.36428	396975.00	3768639.00	0.47564
397025.00	3768639.00	0.64219	397075.00	3768639.00	0.90075
397125.00	3768639.00	1.33533	397175.00	3768639.00	2.44618
397225.00	3768639.00	5.69622	397275.00	3768639.00	21.68408
397325.00	3768639.00	8.97496	397375.00	3768639.00	3.79314
397425.00	3768639.00	2.13754	397475.00	3768639.00	1.23432
397525.00	3768639.00	0.88283	396425.00	3768689.00	0.06325
396475.00	3768689.00	0.07878	396525.00	3768689.00	0.08825
396575.00	3768689.00	0.09779	396625.00	3768689.00	0.11300
396675.00	3768689.00	0.13035	396725.00	3768689.00	0.15472
396775.00	3768689.00	0.18485	396825.00	3768689.00	0.22389
396875.00	3768689.00	0.27551	396925.00	3768689.00	0.34714
396975.00	3768689.00	0.44999	397025.00	3768689.00	0.60828
397075.00	3768689.00	0.87468	397125.00	3768689.00	1.31157
397175.00	3768689.00	2.48876	397225.00	3768689.00	7.26249
397275.00	3768689.00	21.90561	397325.00	3768689.00	7.01238
397375.00	3768689.00	3.41161	397425.00	3768689.00	2.06108
397475.00	3768689.00	1.37063	397525.00	3768689.00	0.97263

*** MODELOPTs: RegDFAULT CONC ELEV URBAN ADJ_U*

*** THE PERIOD (43848 HRS) AVERAGE CONCENTRATION VALUES FOR SOURCE GROUP: HAUL2 ***
INCLUDING SOURCE(S): L0002339 , L0002340 , L0002341 , L0002342 , L0002343 , L0002344 , L0002345 , L0002346 , L0002347 , L0002348 , L0002349 , L0002350 , L0002351 , L0002352 , L0002353 , L0002354 , L0002355 , L0002356 , L0002357 , L0002358 , L0002359 , L0002360 , L0002361 , L0002362 , L0002363 , L0002364 , L0002365 , L0002366 , . . . ,

*** DISCRETE CARTESIAN RECEPTOR POINTS ***

** CONC OF PM_10 IN MICROGRAMS/M**3 **

X-COORD (M)	Y-COORD (M)	CONC	X-COORD (M)	Y-COORD (M)	CONC
396166.28	3767377.28	0.02881	396266.28	3767377.28	0.02873
396366.28	3767377.28	0.02910	396466.28	3767377.28	0.02907
396566.28	3767377.28	0.03179	396666.28	3767377.28	0.02871
396766.28	3767377.28	0.02811	396866.28	3767377.28	0.02770
396966.28	3767377.28	0.02756	397066.28	3767377.28	0.02585
397166.28	3767377.28	0.02529	397266.28	3767377.28	0.02557
397366.28	3767377.28	0.02363	397466.28	3767377.28	0.02027
397566.28	3767377.28	0.02010	397666.28	3767377.28	0.01966
397766.28	3767377.28	0.02143	397866.28	3767377.28	0.02065
396166.28	3767477.28	0.03442	396266.28	3767477.28	0.03202
396366.28	3767477.28	0.03278	396466.28	3767477.28	0.03577
396566.28	3767477.28	0.03490	396666.28	3767477.28	0.03209
396766.28	3767477.28	0.03151	396866.28	3767477.28	0.03098
396966.28	3767477.28	0.03070	397066.28	3767477.28	0.02882
397166.28	3767477.28	0.02715	397266.28	3767477.28	0.02749

397366.28 3767477.28 0.02627 397466.28 3767477.28 0.02249
397566.28 3767477.28 0.02125 397666.28 3767477.28 0.02118
397766.28 3767477.28 0.02123 397866.28 3767477.28 0.02093
396166.28 3767577.28 0.03636 396266.28 3767577.28 0.03614
396366.28 3767577.28 0.03653 396466.28 3767577.28 0.03778
396566.28 3767577.28 0.04119 396666.28 3767577.28 0.03986
396766.28 3767577.28 0.03546 396866.28 3767577.28 0.03509
396966.28 3767577.28 0.03448 397066.28 3767577.28 0.03335
397166.28 3767577.28 0.03047 397266.28 3767577.28 0.02989
397366.28 3767577.28 0.02892 397466.28 3767577.28 0.02426
397566.28 3767577.28 0.02287 397666.28 3767577.28 0.02194
397766.28 3767577.28 0.02180 397866.28 3767577.28 0.02136
396166.28 3767677.28 0.04644 396266.28 3767677.28 0.04117
396366.28 3767677.28 0.04261 396466.28 3767677.28 0.05002
396566.28 3767677.28 0.04792 396666.28 3767677.28 0.04122
396766.28 3767677.28 0.04077 396866.28 3767677.28 0.04126
396966.28 3767677.28 0.03831 397066.28 3767677.28 0.03719
397166.28 3767677.28 0.03474 397266.28 3767677.28 0.02920
397366.28 3767677.28 0.03088 397466.28 3767677.28 0.02483
397566.28 3767677.28 0.02430 397666.28 3767677.28 0.02360
397766.28 3767677.28 0.02282 397866.28 3767677.28 0.02286
396166.28 3767777.28 0.05345 396266.28 3767777.28 0.05956
396366.28 3767777.28 0.05539 396466.28 3767777.28 0.05602
396566.28 3767777.28 0.04830 396666.28 3767777.28 0.04785
396766.28 3767777.28 0.05008 396866.28 3767777.28 0.04730

*** MODELOPTs: RegDFAULT CONC ELEV URBAN ADJ_U*

*** THE PERIOD (43848 HRS) AVERAGE CONCENTRATION VALUES FOR SOURCE GROUP: HAUL2 ***
INCLUDING SOURCE(S): L0002339 , L0002340 , L0002341 , L0002342 , L0002343 , L0002344 , L0002345 , L0002346 , L0002347 , L0002348 , L0002349 , L0002350 , L0002351 , L0002352 , L0002353 , L0002354 , L0002355 , L0002356 , L0002357 , L0002358 , L0002359 , L0002360 , L0002361 , L0002362 , L0002363 , L0002364 , L0002365 , L0002366 , . . . ,

*** DISCRETE CARTESIAN RECEPTOR POINTS ***

** CONC OF PM_10 IN MICROGRAMS/M**3 **

X-COORD (M)	Y-COORD (M)	CONC	X-COORD (M)	Y-COORD (M)	CONC
396966.28	3767777.28	0.04059	397066.28	3767777.28	0.03928
397166.28	3767777.28	0.03812	397266.28	3767777.28	0.03229
397366.28	3767777.28	0.03207	397466.28	3767777.28	0.02697
397566.28	3767777.28	0.02567	397666.28	3767777.28	0.02559
397766.28	3767777.28	0.02386	397866.28	3767777.28	0.02291
396166.28	3767877.28	0.06057	396266.28	3767877.28	0.06889
396366.28	3767877.28	0.07018	396466.28	3767877.28	0.06265
396566.28	3767877.28	0.05669	397466.28	3767877.28	0.03268
397566.28	3767877.28	0.02781	397666.28	3767877.28	0.02551
397766.28	3767877.28	0.02408	397866.28	3767877.28	0.02519
396166.28	3767977.28	0.06474	396266.28	3767977.28	0.07374
396366.28	3767977.28	0.07725	396466.28	3767977.28	0.06909
397466.28	3767977.28	0.03210	397566.28	3767977.28	0.02952
397666.28	3767977.28	0.02755	397766.28	3767977.28	0.02953
397866.28	3767977.28	0.03140	396166.28	3768077.28	0.09322

396266.28	3768077.28	0.08425	396366.28	3768077.28	0.08871
396466.28	3768077.28	0.09220	397466.28	3768077.28	0.03806
397566.28	3768077.28	0.03818	397666.28	3768077.28	0.03596
397766.28	3768077.28	0.03262	397866.28	3768077.28	0.03330
396166.28	3768177.28	0.11779	396266.28	3768177.28	0.11801
396366.28	3768177.28	0.12487	396466.28	3768177.28	0.11608
397466.28	3768177.28	0.04965	397566.28	3768177.28	0.04891
397666.28	3768177.28	0.04668	397766.28	3768177.28	0.04027
397866.28	3768177.28	0.03987	396166.28	3768277.28	0.14702
396266.28	3768277.28	0.13855	396366.28	3768277.28	0.15272
396466.28	3768277.28	0.15112	397366.28	3768277.28	0.06224
397466.28	3768277.28	0.06286	397566.28	3768277.28	0.05738
397666.28	3768277.28	0.05590	397766.28	3768277.28	0.05059
397866.28	3768277.28	0.04384	396166.28	3768377.28	0.18034
396266.28	3768377.28	0.18134	396366.28	3768377.28	0.19945
396466.28	3768377.28	0.20893	397266.28	3768377.28	0.08867
397366.28	3768377.28	0.07978	397466.28	3768377.28	0.07290
397566.28	3768377.28	0.06237	397666.28	3768377.28	0.05678
397766.28	3768377.28	0.05351	397866.28	3768377.28	0.04319
396166.28	3768477.28	0.22828	396266.28	3768477.28	0.24184
396366.28	3768477.28	0.26563	396466.28	3768477.28	0.28995
397166.28	3768477.28	0.19242	397266.28	3768477.28	0.12220
397366.28	3768477.28	0.09312	397466.28	3768477.28	0.07529
397566.28	3768477.28	0.07917	397666.28	3768477.28	0.07089
397766.28	3768477.28	0.05097	397866.28	3768477.28	0.04994

*** MODELOPTs: RegDFAULT CONC ELEV URBAN ADJ_U*

*** THE PERIOD (43848 HRS) AVERAGE CONCENTRATION VALUES FOR SOURCE GROUP: HAUL2 ***
INCLUDING SOURCE(S): L0002339 , L0002340 , L0002341 , L0002342 , L0002343 , L0002344 , L0002345 , L0002346 , L0002347 , L0002348 , L0002349 , L0002350 , L0002351 , L0002352 , L0002353 , L0002354 , L0002355 , L0002356 , L0002357 , L0002358 , L0002359 , L0002360 , L0002361 , L0002362 , L0002363 , L0002364 , L0002365 , L0002366 , . . . ,

*** DISCRETE CARTESIAN RECEPTOR POINTS ***

** CONC OF PM_10 IN MICROGRAMS/M**3 **

X-COORD (M)	Y-COORD (M)	CONC	X-COORD (M)	Y-COORD (M)	CONC
396166.28	3768577.28	0.29453	396266.28	3768577.28	0.33531
396366.28	3768577.28	0.35860	396466.28	3768577.28	0.42421
396566.28	3768577.28	0.40615	396866.28	3768577.28	0.42678
396966.28	3768577.28	0.41985	397066.28	3768577.28	0.37099
397166.28	3768577.28	0.30409	397266.28	3768577.28	0.22173
397366.28	3768577.28	0.13658	397466.28	3768577.28	0.09404
397566.28	3768577.28	0.08264	397666.28	3768577.28	0.07488
397766.28	3768577.28	0.06878	397866.28	3768577.28	0.05810
396166.28	3768677.28	0.53823	396266.28	3768677.28	0.61451
396366.28	3768677.28	0.59474	396466.28	3768677.28	0.72564
396566.28	3768677.28	0.72438	396666.28	3768677.28	0.72265
396766.28	3768677.28	0.72274	396866.28	3768677.28	0.76503
396966.28	3768677.28	0.75905	397066.28	3768677.28	0.70097
397166.28	3768677.28	0.59310	397366.28	3768677.28	0.24069
397466.28	3768677.28	0.15096	397566.28	3768677.28	0.10350

397666.28 3768677.28 0.08248 397766.28
3768677.28 0.07558
397866.28 3768677.28 0.06323 396166.28
3768777.28 1.61479
396266.28 3768777.28 2.00845 396366.28
3768777.28 1.46328
396466.28 3768777.28 1.91233 396566.28
3768777.28 2.03800
396666.28 3768777.28 2.02113 396766.28
3768777.28 2.06845
396866.28 3768777.28 2.11289 396966.28
3768777.28 2.09135
397066.28 3768777.28 2.09361 397166.28
3768777.28 2.02742
397266.28 3768777.28 1.53589 397366.28
3768777.28 0.67487
397466.28 3768777.28 0.29639 397566.28
3768777.28 0.17334
397666.28 3768777.28 0.11798 397766.28
3768777.28 0.08722
397866.28 3768777.28 0.06796 396166.28
3768877.28 6.57837
396266.28 3768877.28 8.47642 396366.28
3768877.28 8.29398
396466.28 3768877.28 9.13600 396566.28
3768877.28 8.60328
396666.28 3768877.28 9.33596 396766.28
3768877.28 9.01321
396866.28 3768877.28 8.72387 396966.28
3768877.28 8.32328
397066.28 3768877.28 8.29776 397166.28
3768877.28 8.24639
397266.28 3768877.28 7.61399 397366.28
3768877.28 2.07176
397466.28 3768877.28 0.44873 397566.28
3768877.28 0.21598
397666.28 3768877.28 0.13405 397766.28
3768877.28 0.09483
397866.28 3768877.28 0.07259 396425.00
3767739.00 0.05553
396475.00 3767739.00 0.05544 396525.00
3767739.00 0.04975
396575.00 3767739.00 0.04990 396625.00
3767739.00 0.04527
396675.00 3767739.00 0.04502 396725.00
3767739.00 0.04602
396775.00 3767739.00 0.04458 396825.00
3767739.00 0.04634
396875.00 3767739.00 0.04448 396925.00
3767739.00 0.04193

*** MODELOPTs: RegDFAULT CONC ELEV URBAN ADJ_U*

*** THE PERIOD (43848 HRS) AVERAGE CONCENTRATION VALUES FOR SOURCE GROUP: HAUL2 ***
INCLUDING SOURCE(S): L0002339 , L0002340 , L0002341 , L0002342 , L0002343 , L0002344 , L0002345 , L0002346 , L0002347 , L0002348 , L0002349 , L0002350 , L0002351 , L0002352 , L0002353 , L0002354 , L0002355 , L0002356 , L0002357 , L0002358 , L0002359 , L0002360 , L0002361 , L0002362 , L0002363 , L0002364 , L0002365 , L0002366 , . . . ,

*** DISCRETE CARTESIAN RECEPTOR POINTS ***

** CONC OF PM_10 IN MICROGRAMS/M**3 **

X-COORD (M)	Y-COORD (M)	CONC	X-COORD (M)	Y-COORD (M)	CONC
396975.00	3767739.00	0.03983	397025.00	3767739.00	0.03879
397075.00	3767739.00	0.03879	397125.00	3767739.00	0.03838
397175.00	3767739.00	0.03680	397225.00	3767739.00	0.03496
397275.00	3767739.00	0.03104	397325.00	3767739.00	0.03146
397375.00	3767739.00	0.03185	397425.00	3767739.00	0.03097
397475.00	3767739.00	0.02610	397525.00	3767739.00	0.02552
396425.00	3767789.00	0.06005	396475.00	3767789.00	0.05613
396525.00	3767789.00	0.05023	396575.00	3767789.00	0.04908
396625.00	3767789.00	0.04888	396675.00	3767789.00	0.04874
396725.00	3767789.00	0.05210	396775.00	3767789.00	0.05136
396825.00	3767789.00	0.05077	396875.00	3767789.00	0.04765
396925.00	3767789.00	0.04471	396975.00	3767789.00	0.04061
397025.00	3767789.00	0.03913	397075.00	3767789.00	0.03945
397125.00	3767789.00	0.03941	397175.00	3767789.00	0.03836
397225.00	3767789.00	0.03698	397275.00	3767789.00	0.03268

397325.00 3767789.00 0.03153 397375.00
3767789.00 0.03249
397425.00 3767789.00 0.03222 397475.00
3767789.00 0.02709
397525.00 3767789.00 0.02665 396425.00
3767839.00 0.06504
396475.00 3767839.00 0.06289 396525.00
3767839.00 0.05323
396575.00 3767839.00 0.05315 396625.00
3767839.00 0.05300
396675.00 3767839.00 0.05908 396725.00
3767839.00 0.05924
396775.00 3767839.00 0.05753 396825.00
3767839.00 0.05488
396875.00 3767839.00 0.05116 396925.00
3767839.00 0.04763
396975.00 3767839.00 0.04214 397025.00
3767839.00 0.03889
397075.00 3767839.00 0.04129 397125.00
3767839.00 0.04201
397175.00 3767839.00 0.03923 397225.00
3767839.00 0.03514
397275.00 3767839.00 0.03239 397325.00
3767839.00 0.03084
397375.00 3767839.00 0.03230 397475.00
3767839.00 0.03177
397525.00 3767839.00 0.02764 396425.00
3767889.00 0.06984
396475.00 3767889.00 0.05814 396525.00
3767889.00 0.05783
396575.00 3767889.00 0.05898 397475.00
3767889.00 0.03073
397525.00 3767889.00 0.02857 396425.00
3767939.00 0.07530
396475.00 3767939.00 0.06361 396525.00
3767939.00 0.06406
397475.00 3767939.00 0.03084 397525.00
3767939.00 0.02966
396425.00 3767989.00 0.07415 396475.00
3767989.00 0.07097
397475.00 3767989.00 0.03193 397525.00
3767989.00 0.03084
396425.00 3768039.00 0.08168 396475.00
3768039.00 0.08226
397475.00 3768039.00 0.03530 397525.00
3768039.00 0.03528
396425.00 3768089.00 0.09238 396475.00
3768089.00 0.09506
397475.00 3768089.00 0.03863 397525.00
3768089.00 0.03995

*** MODELOPTs: RegDFAULT CONC ELEV URBAN ADJ_U*

*** THE PERIOD (43848 HRS) AVERAGE CONCENTRATION VALUES FOR SOURCE GROUP: HAUL2 ***
INCLUDING SOURCE(S): L0002339 , L0002340 , L0002341 , L0002342 , L0002343 , L0002344 , L0002345 , L0002346 , L0002347 , L0002348 , L0002349 , L0002350 , L0002351 , L0002352 , L0002353 , L0002354 , L0002355 , L0002356 , L0002357 , L0002358 , L0002359 , L0002360 , L0002361 , L0002362 , L0002363 , L0002364 , L0002365 , L0002366 , . . . ,

*** DISCRETE CARTESIAN RECEPTOR POINTS ***

** CONC OF PM_10 IN MICROGRAMS/M**3 **

X-COORD (M)	Y-COORD (M)	CONC	X-COORD (M)	Y-COORD (M)	CONC
396425.00	3768139.00	0.12014	396475.00	3768139.00	0.10631
397425.00	3768139.00	0.04522	397475.00	3768139.00	0.04509
397525.00	3768139.00	0.04504	396425.00	3768189.00	0.13266
396475.00	3768189.00	0.11930	397375.00	3768189.00	0.05246
397425.00	3768189.00	0.05527	397475.00	3768189.00	0.05085
397525.00	3768189.00	0.04958	396425.00	3768239.00	0.14725
396475.00	3768239.00	0.13578	397375.00	3768239.00	0.05690
397425.00	3768239.00	0.06677	397475.00	3768239.00	0.06479
397525.00	3768239.00	0.06126	396425.00	3768289.00	0.16125
396475.00	3768289.00	0.15597	397325.00	3768289.00	0.06687
397375.00	3768289.00	0.06438	397425.00	3768289.00	0.06104
397475.00	3768289.00	0.05989	397525.00	3768289.00	0.05986
396425.00	3768339.00	0.18855	396475.00	3768339.00	0.18213
396525.00	3768339.00	0.19086	397275.00	3768339.00	0.08014
397325.00	3768339.00	0.07491	397375.00	3768339.00	0.07262

397425.00 3768339.00 0.06819 397475.00
3768339.00 0.06452
397525.00 3768339.00 0.06101 396425.00
3768389.00 0.21508
396475.00 3768389.00 0.21461 396525.00
3768389.00 0.22090
397225.00 3768389.00 0.09891 397275.00
3768389.00 0.09058
397325.00 3768389.00 0.08429 397375.00
3768389.00 0.08159
397425.00 3768389.00 0.07849 397475.00
3768389.00 0.07414
397525.00 3768389.00 0.07039 396425.00
3768439.00 0.25143
396475.00 3768439.00 0.25435 396525.00
3768439.00 0.25900
397175.00 3768439.00 0.15606 397225.00
3768439.00 0.11665
397275.00 3768439.00 0.10596 397325.00
3768439.00 0.09234
397375.00 3768439.00 0.08330 397425.00
3768439.00 0.07644
397475.00 3768439.00 0.08137 397525.00
3768439.00 0.07806
396425.00 3768489.00 0.29382 396475.00
3768489.00 0.30232
396525.00 3768489.00 0.30991 397075.00
3768489.00 0.23965
397125.00 3768489.00 0.22089 397175.00
3768489.00 0.19704
397225.00 3768489.00 0.15941 397275.00
3768489.00 0.12512
397325.00 3768489.00 0.10340 397375.00
3768489.00 0.09431
397425.00 3768489.00 0.08514 397475.00
3768489.00 0.07496
397525.00 3768489.00 0.06983 396425.00
3768539.00 0.34972
396475.00 3768539.00 0.36549 396525.00
3768539.00 0.37333
396575.00 3768539.00 0.35361 397025.00
3768539.00 0.32251
397075.00 3768539.00 0.30070 397125.00
3768539.00 0.27672
397175.00 3768539.00 0.24715 397225.00
3768539.00 0.21011
397275.00 3768539.00 0.15054 397325.00
3768539.00 0.12390
397375.00 3768539.00 0.11180 397425.00
3768539.00 0.09580

*** MODELOPTs: RegDFAULT CONC ELEV URBAN ADJ_U*

*** THE PERIOD (43848 HRS) AVERAGE CONCENTRATION VALUES FOR SOURCE GROUP: HAUL2 ***
INCLUDING SOURCE(S): L0002339 , L0002340 , L0002341 , L0002342 , L0002343 , L0002344 , L0002345 , L0002346 , L0002347 , L0002348 , L0002349 , L0002350 , L0002351 , L0002352 , L0002353 , L0002354 , L0002355 , L0002356 , L0002357 , L0002358 , L0002359 , L0002360 , L0002361 , L0002362 , L0002363 , L0002364 , L0002365 , L0002366 , . . . ,

*** DISCRETE CARTESIAN RECEPTOR POINTS ***

** CONC OF PM_10 IN MICROGRAMS/M**3 **

X-COORD (M)	Y-COORD (M)	CONC	X-COORD (M)	Y-COORD (M)	CONC
397475.00	3768539.00	0.08411	397525.00	3768539.00	0.07523
396425.00	3768589.00	0.41759	396475.00	3768589.00	0.45001
396525.00	3768589.00	0.44425	396575.00	3768589.00	0.42261
396625.00	3768589.00	0.41024	396825.00	3768589.00	0.44732
396875.00	3768589.00	0.44912	396925.00	3768589.00	0.45873
396975.00	3768589.00	0.44317	397025.00	3768589.00	0.42132
397075.00	3768589.00	0.39071	397125.00	3768589.00	0.35763
397175.00	3768589.00	0.31722	397225.00	3768589.00	0.27617
397275.00	3768589.00	0.23206	397325.00	3768589.00	0.15994
397375.00	3768589.00	0.14050	397425.00	3768589.00	0.11008
397475.00	3768589.00	0.09464	397525.00	3768589.00	0.08315
396425.00	3768639.00	0.51404	396475.00	3768639.00	0.57901
396525.00	3768639.00	0.53989	396575.00	3768639.00	0.53735
396625.00	3768639.00	0.53959	396675.00	3768639.00	0.54125
396725.00	3768639.00	0.54642	396775.00	3768639.00	0.56206

396825.00	3768639.00	0.57179	396875.00	3768639.00	0.58988
396925.00	3768639.00	0.60336	396975.00	3768639.00	0.59144
397025.00	3768639.00	0.56624	397075.00	3768639.00	0.52364
397125.00	3768639.00	0.48914	397175.00	3768639.00	0.44119
397225.00	3768639.00	0.38191	397275.00	3768639.00	0.30432
397325.00	3768639.00	0.22218	397375.00	3768639.00	0.18763
397425.00	3768639.00	0.15030	397475.00	3768639.00	0.10847
397525.00	3768639.00	0.09317	396425.00	3768689.00	0.67489
396475.00	3768689.00	0.79849	396525.00	3768689.00	0.82516
396575.00	3768689.00	0.80485	396625.00	3768689.00	0.80648
396675.00	3768689.00	0.79101	396725.00	3768689.00	0.79183
396775.00	3768689.00	0.78766	396825.00	3768689.00	0.81412
396875.00	3768689.00	0.83538	396925.00	3768689.00	0.83818
396975.00	3768689.00	0.82492	397025.00	3768689.00	0.79817
397075.00	3768689.00	0.75997	397125.00	3768689.00	0.72587
397175.00	3768689.00	0.64467	397225.00	3768689.00	0.56037
397275.00	3768689.00	0.44884	397325.00	3768689.00	0.32798
397375.00	3768689.00	0.24314	397425.00	3768689.00	0.19087
397475.00	3768689.00	0.15028	397525.00	3768689.00	0.12141

*** MODELOPTs: RegDFAULT CONC ELEV URBAN ADJ_U*

*** THE PERIOD (43848 HRS) AVERAGE CONCENTRATION VALUES FOR SOURCE GROUP: ALL ***
INCLUDING SOURCE(S): L0001804 , L0001805 , L0001806 , L0001807 , L0001808 , L0001809 , L0001810 , L0001811 , L0001812 , L0001813 , L0001814 , L0001815 , L0001816 , L0001817 , L0001818 , L0001819 , L0001820 , L0001821 , L0001822 , L0001823 , L0001824 , L0001825 , L0001826 , L0001827 , L0001828 , L0001829 , L0001830 , L0001831 , . . . ,

*** DISCRETE CARTESIAN RECEPTOR POINTS ***

** CONC OF PM_10 IN MICROGRAMS/M**3 **

X-COORD (M)	Y-COORD (M)	CONC	X-COORD (M)	Y-COORD (M)	CONC
396166.28	3767377.28	0.82352	396266.28	3767377.28	0.89811
396366.28	3767377.28	1.01212	396466.28	3767377.28	1.11854
396566.28	3767377.28	1.25260	396666.28	3767377.28	1.33911
396766.28	3767377.28	1.40336	396866.28	3767377.28	1.47810
396966.28	3767377.28	1.58529	397066.28	3767377.28	1.63983
397166.28	3767377.28	1.62293	397266.28	3767377.28	1.55174
397366.28	3767377.28	1.50559	397466.28	3767377.28	1.42582
397566.28	3767377.28	1.31124	397666.28	3767377.28	1.18924
397766.28	3767377.28	1.04867	397866.28	3767377.28	0.93289
396166.28	3767477.28	0.92218	396266.28	3767477.28	1.00442
396366.28	3767477.28	1.16087	396466.28	3767477.28	1.31989
396566.28	3767477.28	1.47773	396666.28	3767477.28	1.61558
396766.28	3767477.28	1.74753	396866.28	3767477.28	1.88291
396966.28	3767477.28	2.06094	397066.28	3767477.28	2.18126
397166.28	3767477.28	2.19213	397266.28	3767477.28	2.10196

397366.28 3767477.28 1.98660 397466.28
3767477.28 1.85385
397566.28 3767477.28 1.66258 397666.28
3767477.28 1.46202
397766.28 3767477.28 1.27279 397866.28
3767477.28 1.10552
396166.28 3767577.28 1.00768 396266.28
3767577.28 1.13958
396366.28 3767577.28 1.32403 396466.28
3767577.28 1.54970
396566.28 3767577.28 1.80904 396666.28
3767577.28 2.06382
396766.28 3767577.28 2.20573 396866.28
3767577.28 2.49701
396966.28 3767577.28 2.77196 397066.28
3767577.28 3.01867
397166.28 3767577.28 3.15859 397266.28
3767577.28 3.06470
397366.28 3767577.28 2.82096 397466.28
3767577.28 2.55331
397566.28 3767577.28 2.18855 397666.28
3767577.28 1.84604
397766.28 3767577.28 1.54786 397866.28
3767577.28 1.30157
396166.28 3767677.28 1.12518 396266.28
3767677.28 1.30348
396366.28 3767677.28 1.57335 396466.28
3767677.28 1.94414
396566.28 3767677.28 2.31547 396666.28
3767677.28 2.60528
396766.28 3767677.28 3.02949 396866.28
3767677.28 3.56891
396966.28 3767677.28 4.14282 397066.28
3767677.28 4.63273
397166.28 3767677.28 5.07070 397266.28
3767677.28 5.22317
397366.28 3767677.28 4.55343 397466.28
3767677.28 3.82778
397566.28 3767677.28 3.02127 397666.28
3767677.28 2.38488
397766.28 3767677.28 1.89929 397866.28
3767677.28 1.53068
396166.28 3767777.28 1.23361 396266.28
3767777.28 1.53831
396366.28 3767777.28 1.90973 396466.28
3767777.28 2.46970
396566.28 3767777.28 3.18378 396666.28
3767777.28 4.28747
396766.28 3767777.28 5.28548 396866.28
3767777.28 6.13153

*** MODELOPTs: RegDFAULT CONC ELEV URBAN ADJ_U*

*** THE PERIOD (43848 HRS) AVERAGE CONCENTRATION VALUES FOR SOURCE GROUP: ALL ***
INCLUDING SOURCE(S): L0001804 , L0001805 , L0001806 , L0001807 , L0001808 , L0001809 , L0001810 , L0001811 , L0001812 , L0001813 , L0001814 , L0001815 , L0001816 , L0001817 , L0001818 , L0001819 , L0001820 , L0001821 , L0001822 , L0001823 , L0001824 , L0001825 , L0001826 , L0001827 , L0001828 , L0001829 , L0001830 , L0001831 , . . . ,

*** DISCRETE CARTESIAN RECEPTOR POINTS ***

** CONC OF PM_10 IN MICROGRAMS/M**3 **

X-COORD (M)	Y-COORD (M)	CONC	X-COORD (M)	Y-COORD (M)	CONC
396966.28	3767777.28	6.94134	397066.28	3767777.28	8.26173
397166.28	3767777.28	10.56960	397266.28	3767777.28	12.18683
397366.28	3767777.28	9.99813	397466.28	3767777.28	6.51919
397566.28	3767777.28	4.35884	397666.28	3767777.28	3.14605
397766.28	3767777.28	2.34224	397866.28	3767777.28	1.80279
396166.28	3767877.28	1.33004	396266.28	3767877.28	1.71927
396366.28	3767877.28	2.33837	396466.28	3767877.28	3.42900
396566.28	3767877.28	5.47996	397466.28	3767877.28	12.46867
397566.28	3767877.28	6.52334	397666.28	3767877.28	3.98788
397766.28	3767877.28	2.74931	397866.28	3767877.28	2.09845
396166.28	3767977.28	1.38942	396266.28	3767977.28	1.86092
396366.28	3767977.28	2.71168	396466.28	3767977.28	5.05284
397466.28	3767977.28	21.06040	397566.28	3767977.28	9.30277
397666.28	3767977.28	5.04848	397766.28	3767977.28	3.47306
397866.28	3767977.28	2.36893	396166.28	3768077.28	1.47196

396266.28	3768077.28	1.94324	396366.28	3768077.28	2.91976
396466.28	3768077.28	5.83713	397466.28	3768077.28	61.03490
397566.28	3768077.28	15.00713	397666.28	3768077.28	6.95785
397766.28	3768077.28	4.09186	397866.28	3768077.28	2.70066
396166.28	3768177.28	1.48956	396266.28	3768177.28	1.99263
396366.28	3768177.28	2.99672	396466.28	3768177.28	5.65090
397466.28	3768177.28	54.78308	397566.28	3768177.28	17.29803
397666.28	3768177.28	7.95779	397766.28	3768177.28	4.67097
397866.28	3768177.28	2.97761	396166.28	3768277.28	1.45936
396266.28	3768277.28	1.92741	396366.28	3768277.28	2.82595
396466.28	3768277.28	4.98827	397366.28	3768277.28	41.73518
397466.28	3768277.28	27.37315	397566.28	3768277.28	15.05568
397666.28	3768277.28	8.03164	397766.28	3768277.28	4.84609
397866.28	3768277.28	3.28309	396166.28	3768377.28	1.39301
396266.28	3768377.28	1.84283	396366.28	3768377.28	2.57920
396466.28	3768377.28	4.11070	397266.28	3768377.28	25.94071
397366.28	3768377.28	21.15585	397466.28	3768377.28	16.10151
397566.28	3768377.28	11.37460	397666.28	3768377.28	7.46772
397766.28	3768377.28	4.92152	397866.28	3768377.28	3.46469
396166.28	3768477.28	1.35104	396266.28	3768477.28	1.73401
396366.28	3768477.28	2.30643	396466.28	3768477.28	3.38605
397166.28	3768477.28	9.72025	397266.28	3768477.28	20.53100
397366.28	3768477.28	14.19713	397466.28	3768477.28	10.46489
397566.28	3768477.28	8.30176	397666.28	3768477.28	6.10856
397766.28	3768477.28	4.51881	397866.28	3768477.28	3.31816

*** MODELOPTs: RegDFAULT CONC ELEV URBAN ADJ_U*

*** THE PERIOD (43848 HRS) AVERAGE CONCENTRATION VALUES FOR SOURCE GROUP: ALL ***
INCLUDING SOURCE(S): L0001804 , L0001805 , L0001806 , L0001807 , L0001808 , L0001809 , L0001810 , L0001811 , L0001812 , L0001813 , L0001814 , L0001815 , L0001816 , L0001817 , L0001818 , L0001819 , L0001820 , L0001821 , L0001822 , L0001823 , L0001824 , L0001825 , L0001826 , L0001827 , L0001828 , L0001829 , L0001830 , L0001831 , . . . ,

*** DISCRETE CARTESIAN RECEPTOR POINTS ***

** CONC OF PM_10 IN MICROGRAMS/M**3 **

X-COORD (M)	Y-COORD (M)	CONC	X-COORD (M)	Y-COORD (M)	CONC
396166.28	3768577.28	1.36809	396266.28	3768577.28	1.62003
396366.28	3768577.28	2.05392	396466.28	3768577.28	2.88972
396566.28	3768577.28	4.16522	396866.28	3768577.28	18.90869
396966.28	3768577.28	12.58977	397066.28	3768577.28	7.77701
397166.28	3768577.28	8.21084	397266.28	3768577.28	17.31275
397366.28	3768577.28	11.04812	397466.28	3768577.28	7.52110
397566.28	3768577.28	6.31829	397666.28	3768577.28	5.04112
397766.28	3768577.28	3.88913	397866.28	3768577.28	3.02186
396166.28	3768677.28	1.51753	396266.28	3768677.28	1.81492
396366.28	3768677.28	2.05654	396466.28	3768677.28	2.70838
396566.28	3768677.28	3.43343	396666.28	3768677.28	4.54942
396766.28	3768677.28	5.89820	396866.28	3768677.28	7.13817
396966.28	3768677.28	7.07915	397066.28	3768677.28	6.51192
397166.28	3768677.28	7.31602	397366.28	3768677.28	8.79302
397466.28	3768677.28	6.15849	397566.28	3768677.28	5.02700

397666.28 3768677.28 4.15949 397766.28
3768677.28 3.37179
397866.28 3768677.28 2.71947 396166.28
3768777.28 2.51141
396266.28 3768777.28 3.07754 396366.28
3768777.28 2.73677
396466.28 3768777.28 3.53838 396566.28
3768777.28 4.11098
396666.28 3768777.28 4.67460 396766.28
3768777.28 5.38974
396866.28 3768777.28 6.01265 396966.28
3768777.28 6.27235
397066.28 3768777.28 6.45673 397166.28
3768777.28 7.25945
397266.28 3768777.28 19.40963 397366.28
3768777.28 8.93030
397466.28 3768777.28 5.28406 397566.28
3768777.28 4.19297
397666.28 3768777.28 3.48980 397766.28
3768777.28 2.90137
397866.28 3768777.28 2.41377 396166.28
3768877.28 7.39296
396266.28 3768877.28 9.43372 396366.28
3768877.28 9.42736
396466.28 3768877.28 10.50283 396566.28
3768877.28 10.27756
396666.28 3768877.28 11.36144 396766.28
3768877.28 11.44279
396866.28 3768877.28 11.57762 396966.28
3768877.28 11.44910
397066.28 3768877.28 11.62564 397166.28
3768877.28 12.06785
397266.28 3768877.28 13.38703 397366.28
3768877.28 9.30629
397466.28 3768877.28 4.54278 397566.28
3768877.28 3.52358
397666.28 3768877.28 2.93614 397766.28
3768877.28 2.49589
397866.28 3768877.28 2.13606 396425.00
3767739.00 2.05524
396475.00 3767739.00 2.30348 396525.00
3767739.00 2.53010
396575.00 3767739.00 2.85857 396625.00
3767739.00 3.07579
396675.00 3767739.00 3.39210 396725.00
3767739.00 3.85431
396775.00 3767739.00 4.03643 396825.00
3767739.00 4.42511
396875.00 3767739.00 4.83533 396925.00
3767739.00 5.18807

*** MODELOPTs: RegDFAULT CONC ELEV URBAN ADJ_U*

*** THE PERIOD (43848 HRS) AVERAGE CONCENTRATION VALUES FOR SOURCE GROUP: ALL ***
INCLUDING SOURCE(S): L0001804 , L0001805 , L0001806 , L0001807 , L0001808 , L0001809 , L0001810 , L0001811 , L0001812 , L0001813 , L0001814 , L0001815 , L0001816 , L0001817 , L0001818 , L0001819 , L0001820 , L0001821 , L0001822 , L0001823 , L0001824 , L0001825 , L0001826 , L0001827 , L0001828 , L0001829 , L0001830 , L0001831 , . . . ,

*** DISCRETE CARTESIAN RECEPTOR POINTS ***

** CONC OF PM_10 IN MICROGRAMS/M**3 **

X-COORD (M)	Y-COORD (M)	CONC	X-COORD (M)	Y-COORD (M)	CONC
396975.00	3767739.00	5.57940	397025.00	3767739.00	6.02861
397075.00	3767739.00	6.55360	397125.00	3767739.00	7.11532
397175.00	3767739.00	7.63283	397225.00	3767739.00	7.95209
397275.00	3767739.00	8.16066	397325.00	3767739.00	7.62375
397375.00	3767739.00	6.73585	397425.00	3767739.00	5.81757
397475.00	3767739.00	5.06515	397525.00	3767739.00	4.29589
396425.00	3767789.00	2.30773	396475.00	3767789.00	2.60990
396525.00	3767789.00	2.97325	396575.00	3767789.00	3.41765
396625.00	3767789.00	4.08385	396675.00	3767789.00	4.92389
396725.00	3767789.00	5.69297	396775.00	3767789.00	5.97010
396825.00	3767789.00	6.46150	396875.00	3767789.00	6.86119
396925.00	3767789.00	7.21869	396975.00	3767789.00	7.64758
397025.00	3767789.00	8.12738	397075.00	3767789.00	9.22778
397125.00	3767789.00	10.90932	397175.00	3767789.00	12.15793
397225.00	3767789.00	13.13146	397275.00	3767789.00	14.17309

397325.00 3767789.00 13.56138 397375.00
3767789.00 11.04306
397425.00 3767789.00 8.45983 397475.00
3767789.00 6.70848
397525.00 3767789.00 5.37230 396425.00
3767839.00 2.62136
396475.00 3767839.00 3.10110 396525.00
3767839.00 3.60872
396575.00 3767839.00 4.51024 396625.00
3767839.00 6.75746
396675.00 3767839.00 10.24405 396725.00
3767839.00 8.91518
396775.00 3767839.00 12.29662 396825.00
3767839.00 9.60704
396875.00 3767839.00 12.95254 396925.00
3767839.00 10.51104
396975.00 3767839.00 13.03798 397025.00
3767839.00 12.13485
397075.00 3767839.00 13.73700 397125.00
3767839.00 26.85318
397175.00 3767839.00 27.60767 397225.00
3767839.00 29.88610
397275.00 3767839.00 25.96163 397325.00
3767839.00 26.08269
397375.00 3767839.00 24.45977 397475.00
3767839.00 9.11240
397525.00 3767839.00 6.77688 396425.00
3767889.00 3.00160
396475.00 3767889.00 3.68412 396525.00
3767889.00 4.78495
396575.00 3767889.00 6.47845 397475.00
3767889.00 12.49579
397525.00 3767889.00 8.51696 396425.00
3767939.00 3.42294
396475.00 3767939.00 4.69206 396525.00
3767939.00 8.88556
397475.00 3767939.00 15.50848 397525.00
3767939.00 10.75208
396425.00 3767989.00 3.76510 396475.00
3767989.00 5.74704
397475.00 3767989.00 20.89933 397525.00
3767989.00 13.50221
396425.00 3768039.00 4.00584 396475.00
3768039.00 6.32169
397475.00 3768039.00 35.51978 397525.00
3768039.00 19.34542
396425.00 3768089.00 4.12546 396475.00
3768089.00 6.40389
397475.00 3768089.00 54.13754 397525.00
3768089.00 24.62571

*** MODELOPTs: RegDFAULT CONC ELEV URBAN ADJ_U*

*** THE PERIOD (43848 HRS) AVERAGE CONCENTRATION VALUES FOR SOURCE GROUP: ALL ***
INCLUDING SOURCE(S): L0001804 , L0001805 , L0001806 , L0001807 , L0001808 , L0001809 , L0001810 , L0001811 , L0001812 , L0001813 , L0001814 , L0001815 , L0001816 , L0001817 , L0001818 , L0001819 , L0001820 , L0001821 , L0001822 , L0001823 , L0001824 , L0001825 , L0001826 , L0001827 , L0001828 , L0001829 , L0001830 , L0001831 , . . . ,

*** DISCRETE CARTESIAN RECEPTOR POINTS ***

** CONC OF PM_10 IN MICROGRAMS/M**3 **

X-COORD (M)	Y-COORD (M)	CONC	X-COORD (M)	Y-COORD (M)	CONC
396425.00	3768139.00	4.27198	396475.00	3768139.00	6.27199
397425.00	3768139.00	170.10305	397475.00	3768139.00	57.44850
397525.00	3768139.00	27.15023	396425.00	3768189.00	4.19836
396475.00	3768189.00	6.08679	397375.00	3768189.00	123.49882
397425.00	3768189.00	75.69364	397475.00	3768189.00	45.77135
397525.00	3768189.00	26.18532	396425.00	3768239.00	4.03011
396475.00	3768239.00	5.73919	397375.00	3768239.00	60.83834
397425.00	3768239.00	41.74566	397475.00	3768239.00	30.04109
397525.00	3768239.00	20.93893	396425.00	3768289.00	3.76609
396475.00	3768289.00	5.21616	397325.00	3768289.00	50.82862
397375.00	3768289.00	36.40983	397425.00	3768289.00	31.32080
397475.00	3768289.00	25.08922	397525.00	3768289.00	18.74152
396425.00	3768339.00	3.53533	396475.00	3768339.00	4.68057
396525.00	3768339.00	7.17859	397275.00	3768339.00	35.90659
397325.00	3768339.00	32.80424	397375.00	3768339.00	25.29676

397425.00 3768339.00 22.31845 397475.00
3768339.00 19.06233
397525.00 3768339.00 15.56146 396425.00
3768389.00 3.26749
396475.00 3768389.00 4.19445 396525.00
3768389.00 5.88564
397225.00 3768389.00 16.71685 397275.00
3768389.00 30.22207
397325.00 3768389.00 27.37319 397375.00
3768389.00 19.42066
397425.00 3768389.00 16.95707 397475.00
3768389.00 14.86505
397525.00 3768389.00 12.64955 396425.00
3768439.00 3.05081
396475.00 3768439.00 3.78870 396525.00
3768439.00 5.00241
397175.00 3768439.00 11.16442 397225.00
3768439.00 14.22450
397275.00 3768439.00 27.20295 397325.00
3768439.00 23.67006
397375.00 3768439.00 15.60407 397425.00
3768439.00 13.53223
397475.00 3768439.00 12.08780 397525.00
3768439.00 10.53501
396425.00 3768489.00 2.82751 396475.00
3768489.00 3.43338
396525.00 3768489.00 4.36695 397075.00
3768489.00 8.76569
397125.00 3768489.00 8.77194 397175.00
3768489.00 9.69645
397225.00 3768489.00 12.21877 397275.00
3768489.00 24.81407
397325.00 3768489.00 19.61957 397375.00
3768489.00 13.10343
397425.00 3768489.00 11.12649 397475.00
3768489.00 9.78617
397525.00 3768489.00 8.79664 396425.00
3768539.00 2.64425
396475.00 3768539.00 3.15186 396525.00
3768539.00 3.85689
396575.00 3768539.00 4.94459 397025.00
3768539.00 9.45540
397075.00 3768539.00 8.12131 397125.00
3768539.00 8.01603
397175.00 3768539.00 8.81407 397225.00
3768539.00 10.97497
397275.00 3768539.00 21.87228 397325.00
3768539.00 17.60749
397375.00 3768539.00 11.43571 397425.00
3768539.00 9.37884

*** MODELOPTs: RegDFAULT CONC ELEV URBAN ADJ_U*

*** THE PERIOD (43848 HRS) AVERAGE CONCENTRATION VALUES FOR SOURCE GROUP: ALL ***
INCLUDING SOURCE(S): L0001804 , L0001805 , L0001806 , L0001807 , L0001808 , L0001809 , L0001810 , L0001811 , L0001812 , L0001813 , L0001814 , L0001815 , L0001816 , L0001817 , L0001818 , L0001819 , L0001820 , L0001821 , L0001822 , L0001823 , L0001824 , L0001825 , L0001826 , L0001827 , L0001828 , L0001829 , L0001830 , L0001831 , . . . ,

*** DISCRETE CARTESIAN RECEPTOR POINTS ***

** CONC OF PM_10 IN MICROGRAMS/M**3 **

X-COORD (M)	Y-COORD (M)	CONC	X-COORD (M)	Y-COORD (M)	CONC
397475.00	3768539.00	8.29339	397525.00	3768539.00	7.44986
396425.00	3768589.00	2.48938	396475.00	3768589.00	2.92812
396525.00	3768589.00	3.45589	396575.00	3768589.00	4.16595
396625.00	3768589.00	5.20629	396825.00	3768589.00	13.65816
396875.00	3768589.00	15.92670	396925.00	3768589.00	13.85206
396975.00	3768589.00	10.99114	397025.00	3768589.00	8.64084
397075.00	3768589.00	7.54537	397125.00	3768589.00	7.54803
397175.00	3768589.00	8.29641	397225.00	3768589.00	10.50867
397275.00	3768589.00	21.64121	397325.00	3768589.00	16.34142
397375.00	3768589.00	10.19322	397425.00	3768589.00	8.07625
397475.00	3768589.00	7.14094	397525.00	3768589.00	6.45797
396425.00	3768639.00	2.37249	396475.00	3768639.00	2.78981
396525.00	3768639.00	3.13142	396575.00	3768639.00	3.66709
396625.00	3768639.00	4.37040	396675.00	3768639.00	5.24621
396725.00	3768639.00	6.26641	396775.00	3768639.00	7.40334

396825.00	3768639.00	8.57216	396875.00	3768639.00	9.30625
396925.00	3768639.00	9.11432	396975.00	3768639.00	8.36476
397025.00	3768639.00	7.45917	397075.00	3768639.00	6.88629
397125.00	3768639.00	6.81736	397175.00	3768639.00	7.86110
397225.00	3768639.00	11.05469	397275.00	3768639.00	27.04830
397325.00	3768639.00	14.36526	397375.00	3768639.00	9.17177
397425.00	3768639.00	7.44673	397475.00	3768639.00	6.26701
397525.00	3768639.00	5.69503	396425.00	3768689.00	2.35324
396475.00	3768689.00	2.78239	396525.00	3768689.00	3.12617
396575.00	3768689.00	3.50155	396625.00	3768689.00	3.98458
396675.00	3768689.00	4.54148	396725.00	3768689.00	5.14392
396775.00	3768689.00	5.76677	396825.00	3768689.00	6.37516
396875.00	3768689.00	6.84217	396925.00	3768689.00	6.94214
396975.00	3768689.00	6.75920	397025.00	3768689.00	6.50117
397075.00	3768689.00	6.39493	397125.00	3768689.00	6.44367
397175.00	3768689.00	7.50880	397225.00	3768689.00	12.21137
397275.00	3768689.00	26.76983	397325.00	3768689.00	11.80492
397375.00	3768689.00	8.14158	397425.00	3768689.00	6.70477
397475.00	3768689.00	5.88034	397525.00	3768689.00	5.29610

*** MODELOPTs: RegDFAULT CONC ELEV URBAN ADJ_U*

*** THE SUMMARY OF MAXIMUM PERIOD (43848 HRS) RESULTS ***

** CONC OF PM_10 IN MICROGRAMS/M**3 **

```
NETWORK
GROUP ID                      AVERAGE CONC                RECEPTOR  (XR, YR,
ZELEV, ZHILL, ZFLAG)  OF TYPE  GRID-ID
- - - - - - - - - - - - - - - - - - - - - - - - - - - - - - - - - - - - - - - -
- - - - - - - - - - - - - - - - - - -

ABWQL     1ST HIGHEST VALUE IS      23.71768 AT (  397425.00,  3768139.00,
156.15,   190.09,    0.00)  DC
          2ND HIGHEST VALUE IS      16.35039 AT (  397375.00,  3768189.00,
154.34,   190.09,    0.00)  DC
          3RD HIGHEST VALUE IS      11.34735 AT (  397425.00,  3768189.00,
146.15,   190.09,    0.00)  DC
          4TH HIGHEST VALUE IS       7.81478 AT (  397466.28,  3768177.28,
149.99,   190.09,    0.00)  DC
          5TH HIGHEST VALUE IS       7.75759 AT (  397475.00,  3768139.00,
152.59,   190.09,    0.00)  DC
          6TH HIGHEST VALUE IS       6.75104 AT (  397375.00,  3768239.00,
155.05,   190.09,    0.00)  DC
          7TH HIGHEST VALUE IS       6.44656 AT (  397475.00,  3768189.00,
149.06,   190.09,    0.00)  DC
          8TH HIGHEST VALUE IS       6.19882 AT (  397466.28,  3768077.28,
160.46,   190.09,    0.00)  DC
          9TH HIGHEST VALUE IS       5.86514 AT (  397475.00,  3768089.00,
160.05,   190.09,    0.00)  DC
         10TH HIGHEST VALUE IS       5.57018 AT (  397425.00,  3768239.00,
137.71,   190.09,    0.00)  DC

EG        1ST HIGHEST VALUE IS      15.95740 AT (  397375.00,  3768189.00,
154.34,   190.09,    0.00)  DC
          2ND HIGHEST VALUE IS      12.86591 AT (  397425.00,  3768139.00,
156.15,   190.09,    0.00)  DC
          3RD HIGHEST VALUE IS       8.45639 AT (  397425.00,  3768189.00,
146.15,   190.09,    0.00)  DC
          4TH HIGHEST VALUE IS       7.10260 AT (  397375.00,  3768239.00,
155.05,   190.09,    0.00)  DC
          5TH HIGHEST VALUE IS       5.43116 AT (  397466.28,  3768177.28,
149.99,   190.09,    0.00)  DC
          6TH HIGHEST VALUE IS       4.98314 AT (  397475.00,  3768139.00,
152.59,   190.09,    0.00)  DC
          7TH HIGHEST VALUE IS       4.91119 AT (  397425.00,  3768239.00,
137.71,   190.09,    0.00)  DC
          8TH HIGHEST VALUE IS       4.65646 AT (  397475.00,  3768189.00,
149.06,   190.09,    0.00)  DC
```

```
          9TH HIGHEST VALUE IS       4.37923 AT (  397366.28,  3768277.28,
154.46,   190.09,    0.00)  DC
         10TH HIGHEST VALUE IS       4.12618 AT (  397466.28,  3768077.28,
160.46,   190.09,    0.00)  DC

FES       1ST HIGHEST VALUE IS      21.84592 AT (  397375.00,  3768189.00,
154.34,   190.09,    0.00)  DC
          2ND HIGHEST VALUE IS      19.85311 AT (  397425.00,  3768139.00,
156.15,   190.09,    0.00)  DC
          3RD HIGHEST VALUE IS      11.82093 AT (  397425.00,  3768189.00,
146.15,   190.09,    0.00)  DC
          4TH HIGHEST VALUE IS       8.29652 AT (  397375.00,  3768239.00,
155.05,   190.09,    0.00)  DC
          5TH HIGHEST VALUE IS       7.20338 AT (  397466.28,  3768177.28,
149.99,   190.09,    0.00)  DC
          6TH HIGHEST VALUE IS       6.47390 AT (  397475.00,  3768139.00,
152.59,   190.09,    0.00)  DC
          7TH HIGHEST VALUE IS       6.10209 AT (  397425.00,  3768239.00,
137.71,   190.09,    0.00)  DC
          8TH HIGHEST VALUE IS       6.03834 AT (  397475.00,  3768189.00,
149.06,   190.09,    0.00)  DC
          9TH HIGHEST VALUE IS       4.80797 AT (  397366.28,  3768277.28,
154.46,   190.09,    0.00)  DC
         10TH HIGHEST VALUE IS       4.71619 AT (  397466.28,  3768077.28,
160.46,   190.09,    0.00)  DC

IO        1ST HIGHEST VALUE IS       4.69798 AT (  397325.00,  3768289.00,
154.50,   190.09,    0.00)  DC
          2ND HIGHEST VALUE IS       4.42056 AT (  397375.00,  3768189.00,
154.34,   190.09,    0.00)  DC
          3RD HIGHEST VALUE IS       4.12150 AT (  397375.00,  3768239.00,
155.05,   190.09,    0.00)  DC
          4TH HIGHEST VALUE IS       3.76130 AT (  397366.28,  3768277.28,
154.46,   190.09,    0.00)  DC
          5TH HIGHEST VALUE IS       3.38146 AT (  397275.00,  3768339.00,
154.38,   190.09,    0.00)  DC
          6TH HIGHEST VALUE IS       3.24985 AT (  397375.00,  3768289.00,
152.85,   190.09,    0.00)  DC
          7TH HIGHEST VALUE IS       3.08618 AT (  397325.00,  3768339.00,
154.21,   190.09,    0.00)  DC
          8TH HIGHEST VALUE IS       2.43669 AT (  397375.00,  3768339.00,
151.52,   190.09,    0.00)  DC
          9TH HIGHEST VALUE IS       2.40125 AT (  397266.28,  3768377.28,
155.06,   177.39,    0.00)  DC
         10TH HIGHEST VALUE IS       2.20185 AT (  397425.00,  3768189.00,
146.15,   190.09,    0.00)  DC
```

*** MODELOPTs: RegDFAULT CONC ELEV URBAN ADJ_U*

*** THE SUMMARY OF MAXIMUM PERIOD (43848 HRS) RESULTS ***

** CONC OF PM_10 IN MICROGRAMS/M**3 **

```
NETWORK
GROUP ID                      AVERAGE CONC                RECEPTOR  (XR, YR,
ZELEV, ZHILL, ZFLAG)  OF TYPE  GRID-ID
- - - - - - - - - - - - - - - - - - - - - - - - - - - - - - - - - - - - - - - -
- - - - - - - - - - - - - - - - - - -

JS        1ST HIGHEST VALUE IS      63.43558 AT (  397425.00,  3768139.00,
156.15,   190.09,    0.00)  DC
          2ND HIGHEST VALUE IS      19.92716 AT (  397375.00,  3768189.00,
154.34,   190.09,    0.00)  DC
          3RD HIGHEST VALUE IS      17.92381 AT (  397425.00,  3768189.00,
146.15,   190.09,    0.00)  DC
          4TH HIGHEST VALUE IS      12.75652 AT (  397475.00,  3768139.00,
152.59,   190.09,    0.00)  DC
          5TH HIGHEST VALUE IS      12.62007 AT (  397466.28,  3768177.28,
149.99,   190.09,    0.00)  DC
          6TH HIGHEST VALUE IS       9.87768 AT (  397475.00,  3768189.00,
149.06,   190.09,    0.00)  DC
          7TH HIGHEST VALUE IS       8.58777 AT (  397466.28,  3768077.28,
160.46,   190.09,    0.00)  DC
          8TH HIGHEST VALUE IS       8.33077 AT (  397475.00,  3768089.00,
160.05,   190.09,    0.00)  DC
          9TH HIGHEST VALUE IS       7.55481 AT (  397375.00,  3768239.00,
155.05,   190.09,    0.00)  DC
         10TH HIGHEST VALUE IS       7.12473 AT (  397425.00,  3768239.00,
137.71,   190.09,    0.00)  DC

MISC1     1ST HIGHEST VALUE IS      18.47820 AT (  397375.00,  3768189.00,
154.34,   190.09,    0.00)  DC
          2ND HIGHEST VALUE IS       5.89520 AT (  397375.00,  3768239.00,
155.05,   190.09,    0.00)  DC
          3RD HIGHEST VALUE IS       4.20768 AT (  397425.00,  3768139.00,
156.15,   190.09,    0.00)  DC
          4TH HIGHEST VALUE IS       4.05910 AT (  397425.00,  3768189.00,
146.15,   190.09,    0.00)  DC
          5TH HIGHEST VALUE IS       3.23053 AT (  397366.28,  3768277.28,
154.46,   190.09,    0.00)  DC
          6TH HIGHEST VALUE IS       2.90951 AT (  397425.00,  3768239.00,
137.71,   190.09,    0.00)  DC
          7TH HIGHEST VALUE IS       2.75732 AT (  397375.00,  3768289.00,
152.85,   190.09,    0.00)  DC
          8TH HIGHEST VALUE IS       2.59733 AT (  397325.00,  3768289.00,
154.50,   190.09,    0.00)  DC
```

```
          9TH HIGHEST VALUE IS       2.38592 AT (  397466.28,  3768177.28,
149.99,   190.09,    0.00)  DC
         10TH HIGHEST VALUE IS       2.27024 AT (  397425.00,  3768289.00,
152.48,   190.09,    0.00)  DC

MISC2     1ST HIGHEST VALUE IS       1.75177 AT (  397025.00,  3767839.00,
157.60,   190.09,    0.00)  DC
          2ND HIGHEST VALUE IS       1.68865 AT (  396975.00,  3767839.00,
154.95,   187.62,    0.00)  DC
          3RD HIGHEST VALUE IS       1.44885 AT (  397275.00,  3768339.00,
154.38,   190.09,    0.00)  DC
          4TH HIGHEST VALUE IS       1.33947 AT (  397325.00,  3768289.00,
154.50,   190.09,    0.00)  DC
          5TH HIGHEST VALUE IS       1.33229 AT (  397225.00,  3768389.00,
154.61,   177.34,    0.00)  DC
          6TH HIGHEST VALUE IS       1.21122 AT (  397266.28,  3768377.28,
155.06,   177.39,    0.00)  DC
          7TH HIGHEST VALUE IS       1.09538 AT (  397275.00,  3768389.00,
154.73,   177.34,    0.00)  DC
          8TH HIGHEST VALUE IS       1.09066 AT (  397175.00,  3768439.00,
140.63,   190.09,    0.00)  DC
          9TH HIGHEST VALUE IS       1.07250 AT (  397325.00,  3768339.00,
154.21,   190.09,    0.00)  DC
         10TH HIGHEST VALUE IS       1.03626 AT (  397075.00,  3768489.00,
132.45,   190.09,    0.00)  DC

MISC3     1ST HIGHEST VALUE IS       8.56649 AT (  396775.00,  3767839.00,
139.90,   187.53,    0.00)  DC
          2ND HIGHEST VALUE IS       7.96082 AT (  396875.00,  3767839.00,
146.71,   187.53,    0.00)  DC
          3RD HIGHEST VALUE IS       7.22343 AT (  396675.00,  3767839.00,
134.33,   179.33,    0.00)  DC
          4TH HIGHEST VALUE IS       5.82752 AT (  396525.00,  3767939.00,
126.24,   179.33,    0.00)  DC
          5TH HIGHEST VALUE IS       5.56971 AT (  396725.00,  3767839.00,
137.93,   187.32,    0.00)  DC
          6TH HIGHEST VALUE IS       5.35065 AT (  396825.00,  3767839.00,
143.15,   187.53,    0.00)  DC
          7TH HIGHEST VALUE IS       5.11494 AT (  396975.00,  3767839.00,
154.95,   187.62,    0.00)  DC
          8TH HIGHEST VALUE IS       4.45112 AT (  396925.00,  3767839.00,
149.04,   189.85,    0.00)  DC
          9TH HIGHEST VALUE IS       4.10342 AT (  396625.00,  3767839.00,
120.95,   189.18,    0.00)  DC
         10TH HIGHEST VALUE IS       3.57448 AT (  396575.00,  3767889.00,
126.62,   179.33,    0.00)  DC
```

*** MODELOPTs: RegDFAULT CONC ELEV URBAN ADJ_U*

*** THE SUMMARY OF MAXIMUM PERIOD (43848 HRS) RESULTS ***

** CONC OF PM_10 IN MICROGRAMS/M**3 **

```
NETWORK
GROUP ID                      AVERAGE CONC                RECEPTOR  (XR, YR,
ZELEV, ZHILL, ZFLAG)  OF TYPE  GRID-ID
- - - - - - - - - - - - - - - - - - - - - - - - - - - - - - - - - - - - - - - -
- - - - - - - - - - - - - - - - - - -

MISC4     1ST HIGHEST VALUE IS      13.81190 AT (  396866.28,  3768577.28,
145.15,   178.57,    0.00)  DC
          2ND HIGHEST VALUE IS      10.98400 AT (  396875.00,  3768589.00,
145.15,   178.57,    0.00)  DC
          3RD HIGHEST VALUE IS       8.86762 AT (  396825.00,  3768589.00,
147.50,   178.57,    0.00)  DC
          4TH HIGHEST VALUE IS       8.83627 AT (  396925.00,  3768589.00,
137.86,   178.57,    0.00)  DC
          5TH HIGHEST VALUE IS       7.28878 AT (  396966.28,  3768577.28,
138.80,   178.57,    0.00)  DC
          6TH HIGHEST VALUE IS       5.80558 AT (  396975.00,  3768589.00,
138.36,   178.57,    0.00)  DC
          7TH HIGHEST VALUE IS       4.94450 AT (  396875.00,  3768639.00,
142.45,   178.57,    0.00)  DC
          8TH HIGHEST VALUE IS       4.59652 AT (  396925.00,  3768639.00,
137.89,   178.57,    0.00)  DC
          9TH HIGHEST VALUE IS       4.38252 AT (  396825.00,  3768639.00,
147.21,   178.57,    0.00)  DC
         10TH HIGHEST VALUE IS       3.66095 AT (  396975.00,  3768639.00,
136.86,   178.57,    0.00)  DC

MISC5     1ST HIGHEST VALUE IS       1.61557 AT (  396475.00,  3768089.00,
134.95,   178.57,    0.00)  DC
          2ND HIGHEST VALUE IS       1.61526 AT (  396475.00,  3768139.00,
136.18,   178.57,    0.00)  DC
          3RD HIGHEST VALUE IS       1.52399 AT (  396475.00,  3768189.00,
137.58,   178.57,    0.00)  DC
          4TH HIGHEST VALUE IS       1.46467 AT (  396466.28,  3768077.28,
134.44,   178.57,    0.00)  DC
          5TH HIGHEST VALUE IS       1.46445 AT (  396475.00,  3768039.00,
131.09,   178.57,    0.00)  DC
          6TH HIGHEST VALUE IS       1.43223 AT (  396466.28,  3768177.28,
137.67,   178.57,    0.00)  DC
          7TH HIGHEST VALUE IS       1.39708 AT (  396525.00,  3768339.00,
144.11,   178.57,    0.00)  DC
          8TH HIGHEST VALUE IS       1.36066 AT (  396475.00,  3768239.00,
138.94,   178.57,    0.00)  DC
```

```
          9TH HIGHEST VALUE IS       1.25908 AT (  396525.00,  3767939.00,
126.24,   179.33,    0.00)  DC
         10TH HIGHEST VALUE IS       1.20791 AT (  396475.00,  3767989.00,
127.90,   179.25,    0.00)  DC

MISC6     1ST HIGHEST VALUE IS      19.99966 AT (  397225.00,  3767839.00,
152.92,   190.09,    0.00)  DC
          2ND HIGHEST VALUE IS      18.04063 AT (  397175.00,  3767839.00,
146.87,   190.09,    0.00)  DC
          3RD HIGHEST VALUE IS      17.85391 AT (  397125.00,  3767839.00,
144.00,   190.09,    0.00)  DC
          4TH HIGHEST VALUE IS      17.00854 AT (  397325.00,  3767839.00,
158.72,   190.09,    0.00)  DC
          5TH HIGHEST VALUE IS      16.25763 AT (  397275.00,  3767839.00,
157.08,   190.09,    0.00)  DC
          6TH HIGHEST VALUE IS      16.16854 AT (  397375.00,  3767839.00,
152.19,   190.09,    0.00)  DC
          7TH HIGHEST VALUE IS       7.43108 AT (  397275.00,  3767789.00,
150.85,   190.09,    0.00)  DC
          8TH HIGHEST VALUE IS       7.13485 AT (  397325.00,  3767789.00,
151.45,   190.09,    0.00)  DC
          9TH HIGHEST VALUE IS       6.37696 AT (  397225.00,  3767789.00,
143.19,   190.09,    0.00)  DC
         10TH HIGHEST VALUE IS       5.88198 AT (  397266.28,  3767777.28,
151.06,   190.09,    0.00)  DC

MISC7     1ST HIGHEST VALUE IS      11.19145 AT (  397425.00,  3768139.00,
156.15,   190.09,    0.00)  DC
          2ND HIGHEST VALUE IS       8.49617 AT (  397375.00,  3768189.00,
154.34,   190.09,    0.00)  DC
          3RD HIGHEST VALUE IS       6.53824 AT (  397466.28,  3768077.28,
160.46,   190.09,    0.00)  DC
          4TH HIGHEST VALUE IS       6.00381 AT (  397425.00,  3768189.00,
146.15,   190.09,    0.00)  DC
          5TH HIGHEST VALUE IS       5.75092 AT (  397475.00,  3768089.00,
160.05,   190.09,    0.00)  DC
          6TH HIGHEST VALUE IS       5.23651 AT (  397475.00,  3768139.00,
152.59,   190.09,    0.00)  DC
          7TH HIGHEST VALUE IS       4.77031 AT (  397466.28,  3768177.28,
149.99,   190.09,    0.00)  DC
          8TH HIGHEST VALUE IS       4.52016 AT (  397475.00,  3768039.00,
161.90,   190.09,    0.00)  DC
          9TH HIGHEST VALUE IS       4.49967 AT (  397375.00,  3768239.00,
155.05,   190.09,    0.00)  DC
         10TH HIGHEST VALUE IS       4.07552 AT (  397475.00,  3768189.00,
149.06,   190.09,    0.00)  DC
```

*** MODELOPTs: RegDFAULT CONC ELEV URBAN ADJ_U*

*** THE SUMMARY OF MAXIMUM PERIOD (43848 HRS) RESULTS ***

** CONC OF PM_10 IN MICROGRAMS/M**3 **

```
NETWORK
GROUP ID                      AVERAGE CONC                RECEPTOR  (XR, YR,
ZELEV, ZHILL, ZFLAG)  OF TYPE  GRID-ID
- - - - - - - - - - - - - - - - - - - - - - - - - - - - - - - - - - - - - - - -
- - - - - - - - - - - - - - - - - - -

PS        1ST HIGHEST VALUE IS      27.94111 AT (  397425.00,  3768139.00,
156.15,   190.09,    0.00)  DC
          2ND HIGHEST VALUE IS      24.07155 AT (  397466.28,  3768077.28,
160.46,   190.09,    0.00)  DC
          3RD HIGHEST VALUE IS      19.21837 AT (  397475.00,  3768089.00,
160.05,   190.09,    0.00)  DC
          4TH HIGHEST VALUE IS      13.25533 AT (  397475.00,  3768139.00,
152.59,   190.09,    0.00)  DC
          5TH HIGHEST VALUE IS      11.70264 AT (  397475.00,  3768039.00,
161.90,   190.09,    0.00)  DC
          6TH HIGHEST VALUE IS       9.16699 AT (  397466.28,  3768177.28,
149.99,   190.09,    0.00)  DC
          7TH HIGHEST VALUE IS       8.67831 AT (  397425.00,  3768189.00,
146.15,   190.09,    0.00)  DC
          8TH HIGHEST VALUE IS       7.49210 AT (  397375.00,  3768189.00,
154.34,   190.09,    0.00)  DC
          9TH HIGHEST VALUE IS       7.39337 AT (  397475.00,  3768189.00,
149.06,   190.09,    0.00)  DC
         10TH HIGHEST VALUE IS       5.81128 AT (  397525.00,  3768089.00,
153.21,   190.09,    0.00)  DC

RESIV     1ST HIGHEST VALUE IS       1.48810 AT (  397275.00,  3768339.00,
154.38,   190.09,    0.00)  DC
          2ND HIGHEST VALUE IS       1.38245 AT (  397225.00,  3768389.00,
154.61,   177.34,    0.00)  DC
          3RD HIGHEST VALUE IS       1.36491 AT (  397325.00,  3768289.00,
154.50,   190.09,    0.00)  DC
          4TH HIGHEST VALUE IS       1.25605 AT (  397266.28,  3768377.28,
155.06,   177.39,    0.00)  DC
          5TH HIGHEST VALUE IS       1.13770 AT (  397275.00,  3768389.00,
154.73,   177.34,    0.00)  DC
          6TH HIGHEST VALUE IS       1.13328 AT (  397175.00,  3768439.00,
140.63,   190.09,    0.00)  DC
          7TH HIGHEST VALUE IS       1.10509 AT (  397325.00,  3768339.00,
154.21,   190.09,    0.00)  DC
          8TH HIGHEST VALUE IS       1.08824 AT (  397075.00,  3768489.00,
132.45,   190.09,    0.00)  DC
```

```
          9TH HIGHEST VALUE IS       1.05850 AT (  397225.00,  3768439.00,
153.74,   177.33,    0.00)  DC
         10TH HIGHEST VALUE IS       1.02391 AT (  397375.00,  3768189.00,
154.34,   190.09,    0.00)  DC

STT       1ST HIGHEST VALUE IS       1.85766 AT (  397125.00,  3767839.00,
144.00,   190.09,    0.00)  DC
          2ND HIGHEST VALUE IS       1.81248 AT (  397175.00,  3767839.00,
146.87,   190.09,    0.00)  DC
          3RD HIGHEST VALUE IS       1.71931 AT (  397075.00,  3767839.00,
149.22,   190.09,    0.00)  DC
          4TH HIGHEST VALUE IS       1.58341 AT (  397225.00,  3767839.00,
152.92,   190.09,    0.00)  DC
          5TH HIGHEST VALUE IS       1.47133 AT (  397025.00,  3767839.00,
157.60,   190.09,    0.00)  DC
          6TH HIGHEST VALUE IS       1.43711 AT (  397375.00,  3768189.00,
154.34,   190.09,    0.00)  DC
          7TH HIGHEST VALUE IS       1.25906 AT (  397275.00,  3767839.00,
157.08,   190.09,    0.00)  DC
          8TH HIGHEST VALUE IS       1.25741 AT (  397325.00,  3768289.00,
154.50,   190.09,    0.00)  DC
          9TH HIGHEST VALUE IS       1.25035 AT (  397375.00,  3768239.00,
155.05,   190.09,    0.00)  DC
         10TH HIGHEST VALUE IS       1.13366 AT (  397366.28,  3768277.28,
154.46,   190.09,    0.00)  DC

HAUL1     1ST HIGHEST VALUE IS      21.90561 AT (  397275.00,  3768689.00,
137.11,   165.66,    0.00)  DC
          2ND HIGHEST VALUE IS      21.68408 AT (  397275.00,  3768639.00,
139.29,   177.32,    0.00)  DC
          3RD HIGHEST VALUE IS      21.40250 AT (  397325.00,  3768289.00,
154.50,   190.09,    0.00)  DC
          4TH HIGHEST VALUE IS      17.34176 AT (  397275.00,  3768339.00,
154.38,   190.09,    0.00)  DC
          5TH HIGHEST VALUE IS      16.54144 AT (  397275.00,  3768439.00,
153.56,   177.33,    0.00)  DC
          6TH HIGHEST VALUE IS      16.48670 AT (  397275.00,  3768389.00,
154.73,   177.34,    0.00)  DC
          7TH HIGHEST VALUE IS      16.20212 AT (  397275.00,  3768489.00,
153.03,   177.33,    0.00)  DC
          8TH HIGHEST VALUE IS      15.56585 AT (  397275.00,  3768589.00,
139.21,   177.33,    0.00)  DC
          9TH HIGHEST VALUE IS      14.69291 AT (  397275.00,  3768539.00,
152.78,   159.97,    0.00)  DC
         10TH HIGHEST VALUE IS      14.35261 AT (  397266.28,  3768777.28,
130.11,   165.66,    0.00)  DC
```

*** MODELOPTs: RegDFAULT CONC ELEV URBAN ADJ_U*

*** THE SUMMARY OF MAXIMUM PERIOD (43848 HRS) RESULTS ***

** CONC OF PM_10 IN MICROGRAMS/M**3 **

```
NETWORK
GROUP ID                      AVERAGE CONC                RECEPTOR  (XR, YR,
ZELEV, ZHILL, ZFLAG)  OF TYPE  GRID-ID
- - - - - - - - - - - - - - - - - - - - - - - - - - - - - - - - - - - - - - - -
- - - - - - - - - - - - - - - - - - -

HAUL2     1ST HIGHEST VALUE IS       9.33596 AT (  396666.28,  3768877.28,
134.12,   178.23,    0.00)  DC
          2ND HIGHEST VALUE IS       9.13600 AT (  396466.28,  3768877.28,
155.69,   156.45,    0.00)  DC
          3RD HIGHEST VALUE IS       9.01321 AT (  396766.28,  3768877.28,
131.83,   178.57,    0.00)  DC
          4TH HIGHEST VALUE IS       8.72387 AT (  396866.28,  3768877.28,
140.58,   141.27,    0.00)  DC
          5TH HIGHEST VALUE IS       8.60328 AT (  396566.28,  3768877.28,
144.84,   157.27,    0.00)  DC
          6TH HIGHEST VALUE IS       8.47642 AT (  396266.28,  3768877.28,
146.16,   165.69,    0.00)  DC
          7TH HIGHEST VALUE IS       8.32328 AT (  396966.28,  3768877.28,
133.37,   172.34,    0.00)  DC
          8TH HIGHEST VALUE IS       8.29776 AT (  397066.28,  3768877.28,
123.23,   177.39,    0.00)  DC
          9TH HIGHEST VALUE IS       8.29398 AT (  396366.28,  3768877.28,
141.06,   166.61,    0.00)  DC
         10TH HIGHEST VALUE IS       8.24639 AT (  397166.28,  3768877.28,
120.15,   177.39,    0.00)  DC

ALL       1ST HIGHEST VALUE IS     170.10305 AT (  397425.00,  3768139.00,
156.15,   190.09,    0.00)  DC
          2ND HIGHEST VALUE IS     123.49882 AT (  397375.00,  3768189.00,
154.34,   190.09,    0.00)  DC
          3RD HIGHEST VALUE IS      75.69364 AT (  397425.00,  3768189.00,
146.15,   190.09,    0.00)  DC
          4TH HIGHEST VALUE IS      61.03490 AT (  397466.28,  3768077.28,
160.46,   190.09,    0.00)  DC
          5TH HIGHEST VALUE IS      60.83834 AT (  397375.00,  3768239.00,
155.05,   190.09,    0.00)  DC
          6TH HIGHEST VALUE IS      57.44850 AT (  397475.00,  3768139.00,
152.59,   190.09,    0.00)  DC
          7TH HIGHEST VALUE IS      54.78308 AT (  397466.28,  3768177.28,
149.99,   190.09,    0.00)  DC
          8TH HIGHEST VALUE IS      54.13754 AT (  397475.00,  3768089.00,
160.05,   190.09,    0.00)  DC
```

```
          9TH HIGHEST VALUE IS      50.82862 AT (  397325.00,  3768289.00,
154.50,   190.09,    0.00)  DC
         10TH HIGHEST VALUE IS      45.77135 AT (  397475.00,  3768189.00,
149.06,   190.09,    0.00)  DC


 *** RECEPTOR TYPES:  GC = GRIDCART
                      GP = GRIDPOLR
                      DC = DISCCART
                      DP = DISCPOLR
```

```
 *** AERMOD - VERSION 22112  ***   *** C:\Lakes\Project Files\Garvey\Garvey.isc
***        03/04/24
 *** AERMET - VERSION  16216 ***   ***
***        13:00:54

PAGE 560
 *** MODELOPTs:    RegDFAULT  CONC  ELEV  URBAN  ADJ_U*

 *** Message Summary : AERMOD Model Execution ***

  --------- Summary of Total Messages --------

 A Total of            0 Fatal Error Message(s)
 A Total of            4 Warning Message(s)
 A Total of         1277 Informational Message(s)

 A Total of        43848 Hours Were Processed

 A Total of          152 Calm Hours Identified

 A Total of         1125 Missing Hours Identified (  2.57 Percent)


    ******** FATAL ERROR MESSAGES ********
               ***  NONE  ***


    ********   WARNING MESSAGES   ********
 ME W186    6381       MEOPEN: THRESH_1MIN 1-min ASOS wind speed threshold used
0.50
 ME W187    6381       MEOPEN: ADJ_U* Option for Stable Low Winds used in AERMET
 MX W450   26305       CHKDAT: Record Out of Sequence in Meteorological File at:
15010101
 MX W450   26305       CHKDAT: Record Out of Sequence in Meteorological File at:
2 year gap

    ************************************
    *** AERMOD Finishes Successfully ***
    ************************************
```

Appendix C

Noise Technical Study

Garvey Reservoir Rehabilitation Project

Noise Technical Study

prepared for

The Metropolitan Water District of Southern California
700 North Alameda Street
Los Angeles, CA 90012

prepared by

Rincon Consultants, Inc.
250 East 1st Street, Suite 1400
Los Angeles, California 90012

March 2024

RINCON CONSULTANTS, INC.
Environmental Scientists | Planners | Engineers
rinconconsultants.com

Table of Contents

1 Project Description and Impact Summary 1
1.1 Introduction 1
1.2 Project Summary 1
2 Background 9
2.1 Overview of Sound Measurement 9
2.2 Vibration 10
2.3 Sensitive Receivers 10
2.4 Existing Noise Environment 10
2.5 Regulatory Setting 13
3 Methodology 16
3.1 Methodology 16
3.2 Significance Thresholds 19
4 Impact Analysis 21
4.1 Noise Impacts 21
4.2 Vibration Impacts 25
5 References 27

Tables

Table 1 Existing Ambient Noise Levels in Project Site Vicinity 11
Table 2 FTA's Daytime Construction Noise Criteria 13
Table 3 FTA's Groundborne Vibration Criteria – Architectural Damage 13
Table 4 Vibration Annoyance Potential Criteria 14
Table 5 Monterey Park Noise Level Limits 15
Table 6 Construction Noise Modeling Assumptions 17
Table 7 HVAC Noise Levels 18
Table 8 Reference Vibration Levels for Construction Equipment 19
Table 9 Estimated Project Construction Noise Levels 22
Table 10 Daytime Operational Noise Levels 24
Table 11 Nighttime Operational Noise Levels 25
Table 12 Estimated Construction Vibration Levels 26

Figures

Figure 1 Regional Location 2
Figure 2 Project Location 3
Figure 3 Existing and Proposed Site Facilities 4
Figure 4 Noise Measurement Locations 12

Appendices

Appendix A Noise Measurement Data
Appendix B Generator Specifications
Appendix C HVAC Specifications
Appendix D RCNM Calculations

1 Project Description and Impact Summary

1.1 Introduction

This study analyzes the potential noise and vibration impacts of The Metropolitan Water District of Southern California's (Metropolitan) proposed Garvey Reservoir Rehabilitation Project (herein referred to as "Project" or "proposed Project"). Rincon Consultants, Inc. (Rincon) prepared this study under contract to Metropolitan. The purpose of this study is to analyze the Project's noise and vibration impacts related to both temporary construction activity and long-term operation of the Project.

1.2 Project Summary

Project Location

The Project site is an approximately 142-acre property located at 1061 South Orange Avenue in Monterey Park, California (Assessor's Parcel Numbers 5260-013-910 and 5260-013-905). The Project site is owned by Metropolitan and is developed with the Garvey Reservoir in the central portion of the site along with appurtenant structures and features, including the Administration Building, Water Quality Laboratory, standby generator, sodium hypochlorite tank farm, and junction structure located in the paved yard on the eastern-central portion of the Project site; a surge tank located immediately south of the reservoir; a construction trailer and paved parking area immediately south of the reservoir; an unpaved construction staging area located immediately northwest of the reservoir; a communications tower and paved parking lot southeast of the reservoir; and paved roadways, power lines, mature trees, and landscaping throughout the Project site. The Project site is secured by chain-link perimeter fencing. The site is regionally accessible from State Route 60, located approximately 0.9 mile south of the Project site and Interstate 10, located approximately 1.4 miles north of the Project site. Local access to the Project site is provided by South Orange Avenue, and the Project site has three driveways at the paved yard along South Orange Avenue immediately north of its intersection with Tegner Drive. The Project site is surrounded by residential neighborhoods to the west, north, south, and east; Hillcrest Elementary School to the east; the Monterey Park City Yard to the north; and Garvey Ranch Park (located on Metropolitan fee property and easement) to the north. Figure 1 shows the Project site in a regional context, and Figure 2 shows the Project site in a local context. Figure 3 shows the location of existing and proposed site facilities.

Project Description

The proposed Project consists of several rehabilitation components and one new component, each of which is described in detail in the following subsections. The location of each Project component is shown in Figure 3.

Reservoir Cover and Liner

The Garvey Reservoir floating cover is a weight-tensioned type cover that is approximately 1,900,000 square feet in size. A series of weights and floats are placed on top of the cover. Sand-

Figure 1 Regional Location

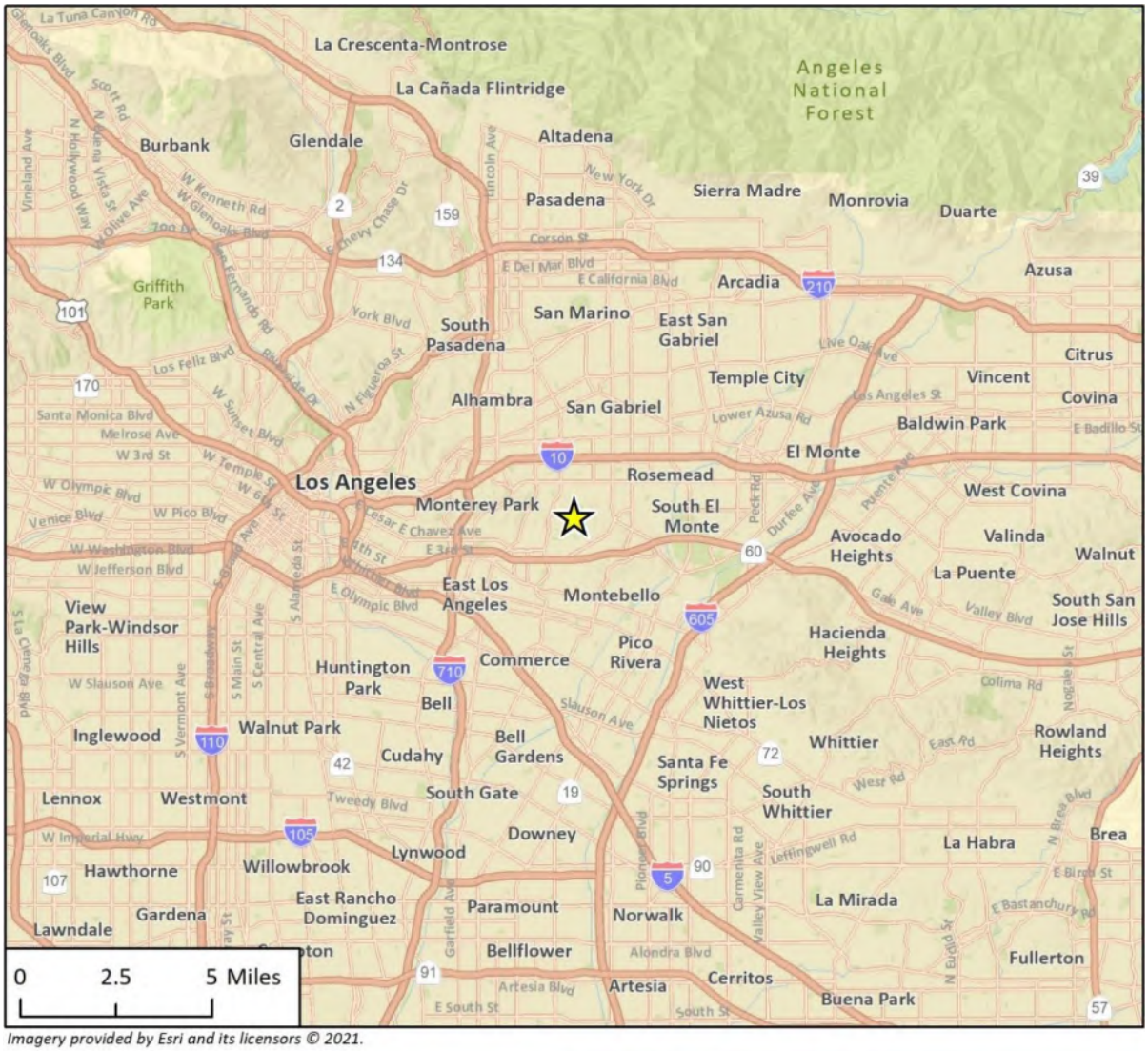

Imagery provided by Esri and its licensors © 2021.

Project Location

N

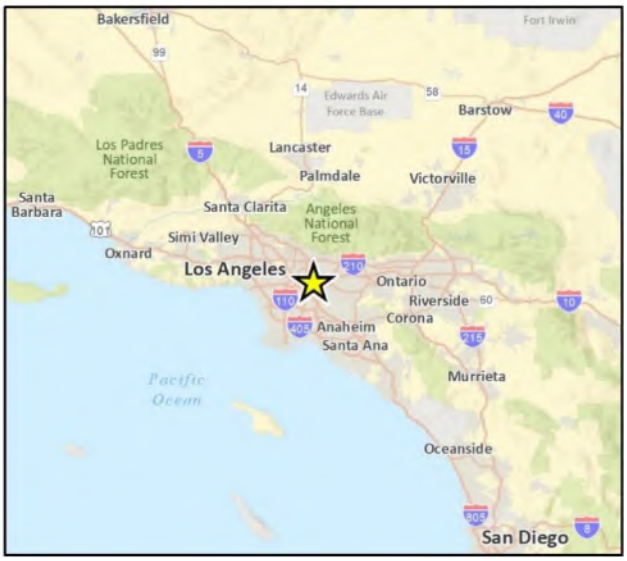

Figure 2 Project Location

Imagery provided by Microsoft Bing and its licensors © 2021.

Figure 3 Existing and Proposed Site Facilities

Imagery provided by Microsoft Bing and its licensors © 2023.

filled weight tubes create troughs that serve as rainwater collection channels. In addition, the floating cover is equipped with 13 rainwater removal pumps. The proposed Project includes the following items related to the reservoir cover and liner:

- Redesign of the inlet/outlet (I/O) tower float assembly;
- Replacement of the polypropylene liner and disposal of the existing liner material;
- Inspection of the reservoir drainage system underneath the liner (including the underlying geo-textile cushion, underdrain, and circulation piping) and peripheral piping and repair or upgrade of the system and piping, if needed;
- Upgrade of the leak detection and monitoring system;
- Installation of a new floating cover;
- Completion of start-up testing procedures including cover inflation, chlorination, emergency dewatering, and instrument testing.

I/O Tower Seismic Upgrades

Garvey Reservoir is equipped with an I/O tower located at the east end of the reservoir. The I/O tower was originally designed for control flexibility, and water flows in or out of the reservoir at various elevations of the I/O tower by the operation of gates located at different elevations. The proposed Project includes seismic rehabilitation of the I/O tower and access bridge. Equipment within the I/O tower and lighting fixtures along the access bridge would also likely be upgraded and replaced. In addition, whether or not the fixtures along the access bridge are replaced, LED lights would be installed in the fixtures.

Junction Structure

The existing junction structure is located to the east of the Administration Building, directly adjacent to South Orange Avenue. The majority of the junction structure is located underground in a subterranean vault with only the roof and access stairway visible at street-level. The functions of the junction structure are essential to water distribution within the Central Pool through the Middle Feeder. The proposed Project includes replacement of five valves in the junction structure to improve reliability.

The timing of implementation of this Project component is contingent on several factors, such as:

1. The reservoir and junction structure cannot be out of service at the same time;
2. The pipelines within the junction structure cannot all be out of service at the same time; and
3. Upstream and downstream pipelines of the junction structure, such as those distributing water from the Robert B. Diemer and/or Joseph Jensen Water Treatment Plants, must be in service to accommodate a partial junction structure shutdown.

Facility Electrical System

The facility electrical system, which includes instrumentation at the Project site, is aged and outdated, which presents maintenance challenges in that some replacement parts are no longer carried by manufacturers. In addition to an aging electrical system, upgrade and/or redesign of the existing electrical system is needed to provide consistent power sources (240-volt to 480-volt) and to replace relays at the switchgear unit, the control panel, and other items. Most of the proposed

electrical system work would be located underground between the Administration Building/Water Quality Laboratory and the sodium hypochlorite tank farm.

Standby Generator

The existing standby generator and its appurtenant electrical system, including transfer switches and the switchgear unit, are over 30 years old and have exceeded their useful life. The Project includes replacement of these features along with upgrades to meet current emission and fire codes under the United States Environmental Protection Agency's Emission and Fuel Standards Program. The new generator would likely be larger than the existing generator. The existing concrete block building housing the generator would be demolished. The new generator would either be in the open air under a canopy structure or would be in a new, enclosed building. The standby generator is located at ground level between the Administration Building/Water Quality Laboratory and the sodium hypochlorite tank farm.

Surge Tank Telemetry

An existing 1,000-gallon surge tank is part of the on-site domestic water system located at the top of the reservoir embankment, immediately south of the reservoir. The proposed Project includes improvements to the telemetry equipment connecting the surge tank to the pumps and would install a direct cable from the pumps in the junction structure to the surge tank pressure switch. The Project also includes upgrades to the pressure switches and automated tank controls.

Administration Building and Water Quality Laboratory Rehabilitation

The Administration Building and Water Quality Laboratory is located in the former chlorination building that was part of the original reservoir construction in the 1950s and later converted to its current functions. The proposed Project includes upgrades and rehabilitation of the interior of the water quality laboratory. The proposed laboratory improvements would enhance efficiency, reliability and safety while providing a workspace that meets current best practice standards for laboratories to ensure compliance with United States Environmental Protection Agency and California Department of Public Health water quality regulations. The proposed Project includes the following:

- Design of a new interior plan layout for the entire building;
- Relocation of the existing Water Quality Laboratory to the Administration Building and vice versa;
- Relocation of the emergency eye wash station from outside the Administration Building to immediately adjacent to the Water Quality Laboratory;
- Provision of a new Americans with Disabilities Act-compliant parking stall with accessible path of travel to the building entrance;
- Modifications to the existing restroom for compliance with the 2010 Americans with Disabilities Act Standard for Accessible Design and 2019 California Building Codes (or most recent iteration in effect at the time);
- Reconstruction of a retaining wall on the south side of the building to prevent ponding and overflow from precipitation;
- Upgrades to the water heater and heating, ventilation, and air conditioning (HVAC) system; and
- Upgrades to enhance safety features.

Proposed Pump Station

The proposed Project includes the construction of a new pump station adjacent to South Orange Avenue to allow for better drought operating conditions, water quality, and flow range. The new pump station would be approximately 150 feet south of the junction structure and would house multiple pumps and valves to provide operational flexibility. The pump station would be built of concrete and masonry, approximately 500 square feet in size, and partially recessed about 10 feet into the hillside adjacent to South Orange Avenue. A subsurface valve tie-in to the Middle Feeder is also proposed and would be actuated when the pump station is utilized.

Miscellaneous Site Upgrades

Numerous, smaller site components may be repaired or rehabilitated as part of the proposed Project. These miscellaneous upgrades may include:

- Upgrades to the ammonia feed system;
- Repaving or repairing existing reservoir roads;
- Replacement of chain link fencing and gates within the property and along the perimeter;
- Improvements to the slopes behind the Administration Building and Water Quality Control Laboratory to reduce stormwater runoff flows;
- Drainage improvements, landscaping, tree trimming, and/or tree and vegetation removal;
- Replacement of security cameras and gate access/intercom; and
- Installation of security motion-activated lighting by the Administration Building and Water Quality Laboratory.

Construction Activities

Project construction activities would occur in three main phases. The first phase would involve work on the reservoir cover and liner and the I/O tower. The second phase would involve work on the junction structure. Other site work related to the facility electrical system, standby generator, surge tank telemetry, Administration Building, Water Quality Laboratory, and miscellaneous site upgrades would occur simultaneously during both Phases 1 and 2. Phase 3 would occur after Phases 1 and 2 are complete and would involve construction of the proposed pump station and ammonia feed system.

Construction of Phases 1 and 2 would occur between September 2025 and December 2027. Construction of Phase 3 would occur between January 2034 and June 2035. Construction activities would typically occur Monday through Friday, although work may be conducted on Saturdays as needed with the approval of Metropolitan staff. While the majority of construction would occur during daytime hours, occasional nighttime activities would be required during the construction period for Metropolitan staff conducting water quality testing and inspections as the reservoir fills up with water. These nighttime activities would not require the use of heavy-duty construction equipment.

Construction staging would occur at an existing, construction staging area located immediately northwest of the reservoir and an existing, partially paved construction trailer area immediately south of the reservoir. Construction worker parking would primarily occur at the construction trailer area. If there are space limitations, the Project Contractor(s) would carpool workers to and from the Project site.

Prior to the start of work in the reservoir, water would be drained from the reservoir through the junction structure into the Middle Feeder. Any water below the intake at the I/O tower would be pumped out and drained through the existing v-ditches to the stormwater drainage system. All water discharged to the stormwater drainage system would be dechlorinated prior to discharge.

Replacement of valves in the junction structure would occur after the reservoir has been emptied and re-filled. A crane would be used to replace the valves through the ground-level vault openings immediately east of the junction structure.

Construction of the pump station facility and ammonia feed system would occur after all other Project construction activities at the reservoir are complete.

Operations and Maintenance Activities

Operations and maintenance activities at Garvey Reservoir, including the frequency of staff visits, monthly testing of the standby generator, electricity usage, and water usage in the Administration Building and Water Quality Laboratory would remain the same as existing conditions once construction activities are completed. The proposed pump station would be an unmanned structure, and any operations or maintenance to the facility would be completed using existing Metropolitan staff.

2 Background

2.1 Overview of Sound Measurement

Sound is a vibratory disturbance created by a moving or vibrating source, which is capable of being detected by the hearing organs (e.g., the human ear). Noise is defined as sound that is loud, unpleasant, unexpected, or undesired and may therefore be classified as a more specific group of sounds. The effects of noise on people can include general annoyance, interference with speech communication, sleep disturbance, and, in the extreme, hearing impairment (California Department of Transportation [Caltrans] 2013).

Human Perception of Sound

Noise levels are commonly measured in decibels (dB) using the A-weighted sound pressure level (dBA). Decibels are measured on a logarithmic scale that quantifies sound intensity in a manner similar to the Richter scale used to measure earthquake magnitudes. A doubling of the energy of a noise source, such as doubling of traffic volume, would increase the noise level by 3 dB; dividing the energy in half would result in a 3 dB decrease (Caltrans 2013).

Human perception of noise has no simple correlation with sound energy: the perception of sound is not linear in terms of dBA or in terms of sound energy. Two sources do not “sound twice as loud” as one source. It is widely accepted that the average healthy ear can barely perceive an increase (or decrease) of up to 3 dBA in noise levels (i.e., twice the sound energy); that a change of 5 dBA is readily perceptible (8 times the sound energy); and that an increase (or decrease) of 10 dBA sounds twice (half) as loud (10.5 times the sound energy) (Caltrans 2013).

Sound Propagation and Shielding

Sound changes in both level and frequency spectrum as it travels from the source to the receiver. The most obvious change is the decrease in the sound level as the distance from the source increases. The manner by which sound reduces with distance depends on factors such as the type of sources (e.g., point or line), the path the sound will travel, site conditions, and obstructions. Noise levels from a point source (e.g., construction, industrial machinery, air conditioning units) typically attenuate, or drop off, at a rate of 6 dBA per doubling of distance. Noise from a line source (e.g., roadway, pipeline, railroad) typically attenuates at about 3 dBA per doubling of distance (Caltrans 2013). Noise levels may also be reduced by intervening structures; the amount of attenuation provided by this “shielding” depends on the size of the object and the frequencies of the noise levels. Natural terrain features, such as hills and dense woods, and man-made features, such as buildings and walls, can significantly alter noise levels. Generally, any large structure blocking the line of sight will provide at least a 5-dBA reduction in source noise levels at the receiver (Federal Highway Administration [FHWA] 2011).

Descriptors

The impact of noise is not a function of loudness alone. The time of day when noise occurs and the duration of the noise are also important factors in evaluating a project’s noise impact. Most noise that lasts for more than a few seconds is variable in its intensity. Consequently, a variety of noise descriptors have been developed. The noise descriptor used for this study is the equivalent noise

level (L_{eq}), which is one of the most frequently used noise metrics and considers both duration and sound power level. The L_{eq} is defined as the single steady-state A-weighted sound level equal to the average sound energy over a time period. When no time period is specified, a 1-hour period is assumed. The L_{max} is the highest noise level within the sampling period, and the L_{min} is the lowest noise level within the measuring period. Normal conversational levels are in the 60 to 65-dBA L_{eq} range; ambient noise levels greater than 65 dBA L_{eq} can interrupt conversations (Federal Transit Administration [FTA] 2018).

2.2 Vibration

Groundborne vibration consists of oscillatory waves that move from a source through the ground to adjacent structures. Vibration energy spreads out as it travels through the ground, causing the vibration level to diminish with distance away from the source (Caltrans 2020). Typically, groundborne vibration generated by human activities attenuates rapidly with distance from the source of the vibration. While people have varying sensitivities to vibrations at different frequencies, in general they are most sensitive to low-frequency vibration. Vibration may be felt, may manifest as an audible low-frequency rumbling noise (referred to as groundborne noise), and may cause windows, items on shelves, and pictures on walls to rattle. Groundborne noise is usually only a problem when the originating vibration spectrum is dominated by frequencies in the upper end of the range (60 to 200 Hertz), or when foundations or utilities, such as sewer and water pipes, physically connect the structure and the vibration source (FTA 2018). Although groundborne vibration is sometimes noticeable in outdoor environments, it is almost never annoying to people who are outdoors (FTA 2018). The primary concern from vibration is that it can be intrusive and annoying to building occupants at vibration-sensitive land uses and may cause structural damage. Vibration amplitudes are usually expressed in peak particle velocity (PPV) inches per second (in/sec). PPV is defined as the maximum instantaneous positive or negative peak of a vibration signal. PPV is often used in monitoring of blasting vibration and other construction activity because it is related to the stresses that are experienced by buildings (Caltrans 2020).

2.3 Sensitive Receivers

Noise- and vibration-sensitive land uses are locations where people reside or where the presence of unwanted sound and vibration could adversely affect the use of the land. Residences, schools, hospitals, guest lodging, libraries, and some passive recreation areas would all be considered noise and vibration-sensitive and may warrant unique measures for protection from intruding noise (Metropolitan 2023). Historic buildings are also typically considered vibration sensitive due to the nature of past construction techniques.

As shown in Figure 2, the Project site is surrounded by sensitive receivers with residential neighborhoods to the west, north, south, and east and Hillcrest Elementary School to the east.

2.4 Existing Noise Environment

The existing noise environment at and near the Project site is comprised primarily of vehicle traffic, including trucks, buses, and autos traveling on local roadways. Motor vehicle noise is characterized by a high number of individual events that can create a sustained noise level in proximity to noise-sensitive uses. Roadways with the highest traffic volumes and speeds produce the highest noise

levels. In the Project area, the main thoroughfare road and primary source of vehicular traffic noise is South Orange Avenue.

To characterize ambient sound levels around the Project site, ambient sound level measurements were taken on January 16, 2024 at six different locations. Table 1 summarizes the results of the short-term noise measurements, which showed noise levels between 54 to 63 dBA L_{eq} in the area. Noise measurement locations are shown in Figure 4.

Table 1 Existing Ambient Noise Levels in Project Site Vicinity

Noise Monitoring ID	Measurement Location	Sample Times[1]	Approximate Distance to Primary Noise Source	dBA L_{eq}	dBA L_{max}
NM-1	Garvey Ranch Park	10:35 – 10:50 a.m.	700 feet to South Orange Avenue	54	62
NM-2	Eastern side of South Orange Avenue next to Hillcrest Elementary School	11:04 – 11:19 a.m.	50 feet to centerline of South Orange Avenue	60	73
NM-3	Cul-de-sac of Adams Way (northern terminus)	11:31 – 11:46 a.m.	35 feet to centerline of Adams Way	56	64
NM-4	Eastern side of Fulton Avenue, north of Keller Street	11:54 a.m. – 12:09 p.m.	30 feet to centerline of Fulton Avenue	56	72
NM-5	Eastern side of Kempton Avenue between McComb Way and Wilcox Avenue	12:59 – 1:14 p.m.	30 feet to centerline of Kempton Avenue	63	83
NM-6	Southern terminus of Russell Avenue	12:37 – 12:52 p.m.	30 feet to centerline of Russell Avenue	62	71

dBA = A-weighted decibel; L_{eq} = average noise level equivalent; L_{max} = maximum instantaneous noise level

[1] Measurements occurred on January 16th, 2024.

Detailed sound level measurement data are included in Appendix A.

Figure 4 Noise Measurement Locations

Imagery provided by Microsoft Bing and its licensors © 2024.

20-09668 EPS
Fig NOI-1 Noise Measurement Locations

2.5 Regulatory Setting

Federal

There are no federal noise standards that directly regulate environmental noise relevant to the proposed Project. The FTA's 2018 *Transit and Noise Vibration Impact Assessment Manual* guidance document was used to evaluate construction noise and vibration levels resulting from Project construction activities, as further detailed in Section 3.4, *Significance Thresholds*. The guidance provides reasonable criteria for assessing construction noise impacts based on the potential for adverse community reaction, which are presented in Table 2.

Table 2 FTA's Daytime Construction Noise Criteria

Receiving Land Use	Noise Criterion (dBA L_{eq} [8-hour])
Residential	80
Commercial	85
Industrial	90

dBA = A-weighted decibel; L_{eq} = average noise level equivalent
Source: FTA 2018

Table 3 summarizes the vibration criteria recommended by the FTA for evaluating the potential for architectural damage to buildings.

Table 3 FTA's Groundborne Vibration Criteria – Architectural Damage

Building Category	Vibration Level (PPV in/sec)
I. Reinforced concrete, steel, or timber (no plaster)	0.5
II. Engineered concrete and masonry (no plaster)	0.3
III. Non-engineered timber and masonry buildings	0.2
IV. Buildings extremely susceptible to vibration damage	0.12

PPV = peak particle velocity; in/sec = inches per second
Source: FTA 2018

State

There are no state regulations that directly regulate environmental noise relevant to the proposed Project. The Caltrans' 2020 *Transportation and Construction Vibration Guidance Manual*, guidance document was used to evaluate construction vibration levels relative to human annoyance resulting from Project construction activities, as further detailed in Section 3.4, *Significance Thresholds*. The guidance provides vibration annoyance potential criteria to humans from construction activities, which are shown in Table 4.

Table 4 Vibration Annoyance Potential Criteria

Human Response	Vibration Level (in/sec PPV)	
	Transient Sources	Continuous/Frequent Intermittent Sources[1]
Severe	2.0	0.4
Strongly perceptible	0.9	0.10
Distinctly perceptible	0.25	0.04
Barely perceptible	0.04	0.01

in/sec = inches per second; PPV = peak particle velocity

[1] Continuous/frequent intermittent sources include impact pile drivers, pogo-stick compactors, crack-and-seat equipment, vibratory pile drivers, and vibratory compaction equipment.

Source: Caltrans 2020

Local

City of Monterey Park Safety Element

The proposed Project site is within Monterey Park and subject to the policies and requirements of the City of Monterey Park's (City) General Plan Safety Element, which are implemented through the Monterey Park Municipal Code (MPMC). The Safety Element of the City's General Plan includes several noise control programs designed to protect citizens from the adverse effects of uncontrolled noise by controlling noise at its source. The following goals and policies are relevant to the proposed Project (City of Monterey Park 2022):

- **Goal 12**: Minimize the impact of point-source noises and ambient noise levels throughout the community.
- **Policy 12.1:** Continue to enforce the noise regulations within the MPMC to control point-source noise.
- **Policy 12.4:** Enforce and revise as necessary City regulations regulating hours for construction activity.

City of Monterey Park Municipal Code

MPMC Chapter 4.50, *Regulation of Noise and Other Disturbances*, contains the City's Nosie Ordinance. MPMC Section 4.50.040 states it is unlawful for any person to allow, maintain, or cause any noise disturbance. MPMC Section 4.50.050 provides exemptions to compliance with the provision of the Noise Ordinance, indicating certain activities are not considered "noise disturbances" such as 1) public works projects performed by public agencies, or their contractors, that cannot be performed from 7:00 a.m. to 6:00 p.m. Monday through Friday and 2) the use of emergency generators during a power outage or other emergency.

MPMC Sections 4.50.070 and 4.50.080 indicate any source of sound exceeding the noise level limits shown in Table 5, as measured at receiving properties, constitutes a prohibited noise disturbance.

Table 5 Monterey Park Noise Level Limits

Land Use	Time Period	Sound Level (dBA)
Residential	Nighttime (10:00 p.m. to 7:00 a.m.)	50
	Daytime (7:00 a.m. to 10:00 p.m.)	55
Neighborhood Commercial[1]	Anytime	60
Other Commercial	Anytime	65
Industrial	Anytime	70

dBA = A-weighted decibel

[1] "Neighborhood Commercial" is not defined in MPMC Chapter 4.50, but MPMC Section 21.10.020 defines the "Neighborhood Shopping" zone as providing for commercial areas intended to serve nearby residential neighborhoods.

Notes:

- If the ambient noise level cannot be sufficiently determined, then the above presumed noise levels will serve as the default ambient noise level.
- If the property where the noise is received is located on the boundary between two different land uses, the lower noise level will apply.

Source: MPMC Section 4.50.080

MPMC Section 4.50.100 provides exceptions to the limits in Table 5, indicating certain activities are not subject to these limits but must comply with other special conditions. The list of exceptions includes construction activities conducted between 7:00 a.m. and 6:00 p.m. Monday through Friday, and between 9:00 a.m. and 6:00 p.m. on Saturdays, Sundays, and holidays. "Construction activities" are defined by MPMC Section 4.50.020 as the grading, demolition, alteration, repair or remodeling of existing structures and construction of new structures including the use of power equipment in connection with such activities. (Construction activities do not include radios or other forms of amplified music on a construction site.) A temporary noise permit must be obtained from the City for construction activities lasting longer than three days.

3 Methodology

3.1 Methodology

Construction Noise

Equipment

Construction noise was estimated using the FHWA Roadway Construction Noise Model (RCNM) (FHWA 2006). RCNM predicts construction noise levels for a variety of construction operations based on empirical data and the application of acoustical propagation formulas. Using RCNM, construction noise levels were estimated at noise-sensitive receivers near the Project site. RCNM provides reference noise levels for standard construction equipment, with an attenuation rate of 6 dBA per doubling of distance for stationary equipment.

Each of the proposed Project components listed in Section 1.2, *Project Description*, would have several sub-phases of construction, which may include demolition, site preparation, grading, building construction, infrastructure installation, paving/site restoration, and/or architectural coating. Each phase of construction has a specific equipment mix, depending on the work to be accomplished during that phase. Each of these sub-phases would also have its own noise characteristics; some would have higher continuous noise levels than others, and some would have high-impact noise levels.

The most noise-intensive construction sub-phase for each of the five primary areas of construction throughout the Project site (reservoir, I/O Tower, surge tank, eastern-central paved yard, and pump station) was analyzed:

- Demolition of the I/O Tower during Phase 1 (which would be the overall most noise-intensive construction activity for the Project);
- Demolition of the reservoir cover during Phase 1;
- Installation of surge tank infrastructure during Phases 1 and 2;
- Installation of junction structure infrastructure during Phase 2; and
- Construction of the pump station during Phase 3.

Table 6 presents the assumptions used in the construction noise modeling, including the anticipated equipment list, the location of nearest sensitive receiver, and distance to the nearest sensitive receiver. Metropolitan provided specific construction equipment anticipated to be used for each sub-phase of construction for each component. The selected receivers were chosen for the construction noise modeling because they are the closest to each construction activity. If noise levels would not exceed thresholds at these receivers, then it can be reasonably assumed noise levels would not exceed thresholds at receivers further away. The distances were measured from the edge of the potential construction work areas to the edge of the receiver properties, which is a conservative assumption given that construction equipment would often operate at a further distance from the edge. In addition, attenuation from intervening structures or topography was not accounted for, which provides a conservative analysis.

Table 6 Construction Noise Modeling Assumptions

Construction Phase and Sub-Phase	Equipment List	Location of Nearest Sensitive Receiver	Distance to Sensitive Receiver (feet)
Phase 1 - I/O Tower Demolition	Backhoes (2), Drill Rig, Compressors (5), Dozers (2), Excavators (2), Loaders (4)	Residences along South Orange Avenue	650
Phase 1 - Reservoir Cover Demolition	Generators (3), Loader (1), Pressure Washers (4), Forklifts (2), Sweeper (1)	Residences along South Orange Avenue	425
Phase 1/2 - Surge Tank Telemetry Infrastructure Installation	Compressors (3), Crane (1), Generators (2), Forklift (1)	Residences along Fillmore Drive	500
Phase 2 - Junction Structure Infrastructure Installation	Compressors (3), Crane (1), Generators (3), Welder (1)	Residences along South Orange Avenue	110
Phase 3 - Pump Station Infrastructure Installation	Loader (1), Generators (3)	Residences along South Orange Avenue	90

Traffic

Temporary construction activities would generate temporary trips by workers, vendors, and haul trucks. The trip routes for the proposed Project were assumed to occur on South Orange Avenue with trips traveling either north or south from the Project site along South Orange Avenue. Based on information provided by Metropolitan, construction traffic was estimated to be up to 20 trips per day.

Stationary On-Site Operational Noise

Stationary noise (i.e., on-site operational noise) from the proposed Project would include a new standby generator, installation of HVAC equipment, and pump station equipment, each of which is discussed further below. Stationary noise levels were modeled at the nearest receivers assuming a 6-dBA reduction per doubling of distance. In addition, to provide a conservative analysis, attenuation from intervening structures or topography was not included in the modeling.

The new standby generator would replace the existing standby generator, currently housed in an enclosed structure. The new generator would either be in the open air under a new metal deck canopy or in a new, enclosed building. To provide a conservative estimate of Project impacts, this analysis conservatively assumes the new standby generator would be in open air. The new standby generator would be 200 kilowatts (kW) with a minimum of 770-gallon sub-base fuel. The brand would be a Caterpillar C7.1 200kW FSBTJ48 diesel generator or similar, which is a Tier 3 generator. An SA-2 weatherproof enclosure would be included with the generator; the noise level for a generator with this type of enclosure would be 75 dBA (see Appendix B for specification sheets). Routine testing of the generator would occur during Metropolitan's normal work hours of 7:00 a.m. to 3:00 p.m., similar to existing conditions. Although the existing standby generator on the Project site currently contributes to the ambient noise environment under baseline conditions, noise produced by the new standby generator is considered as an addition to the existing noise environment in this analysis to be conservative, due to the uncertainty involved in estimating existing noise levels.

Upgraded HVAC equipment installed as part of the proposed Project would include an outside air split system that would be installed and located adjacent to the Administration Building and Water Quality Laboratory. Specific information on the type of system is not currently available. Therefore, for purposes of this analysis, it was assumed a potential HVAC unit could be a 3-ton Carrier 38HDR036 Performance Series Air Conditioner unit (see Appendix C for manufacturer's specifications). The unit would generate approximate noise levels and noise spectrum data shown in Table 7. Although the existing HVAC equipment on the Project site currently contributes to the ambient noise environment under baseline conditions, noise produced by the upgraded HVAC equipment is considered as an addition to the existing noise environment in this analysis to be conservative, due to the uncertainty involved in estimating existing noise levels.

Table 7 HVAC Noise Levels

	Noise Levels in dB[1] Measured at Octave Frequencies							
HVAC Unit	125 Hz	250 Hz	500 Hz	1 KHz	2 KHz	4 KHz	8 KHz	Overall Noise Level in A-weighted Scale (dBA)[1]
3-ton	65.0	61.5	63.5	65.0	64.5	61.0	54.5	72

HVAC = heating, ventilation, and air conditioning; Hz = Hertz; KHz = kilohertz

[1] Noise Levels for 3-ton Carrier 38HDR036 Performance Series (see Appendix C for specification sheets).

The proposed pump station would include two 70-horsepower Sulzer pumps (or equivalent). To analyze noise impacts from these pumps, a reference noise level measured for a 100-horsepower pump at a water treatment plant was used (Padre Dam Municipal Water District 2015). This 100-horsepower pump had a sound power level of 93.2 dBA L_{eq} which is equivalent to a sound pressure level (SPL) of 85.2 dBA $L_{eq.}$ at a distance of three feet. This analysis uses the noise level for this 100-horsepower pump to approximate noise levels generated by each of the proposed 70-horsepower pumps, which is conservative because it is a larger engine and thus would be expected to generate higher noise levels. The pump station would be located within a fully enclosed masonry structure that would provide noise attenuation. Noise was assumed to be attenuated by at least 35 dBA from the pump station to the outside of its structure. This is a conservative assumption because the FHWA describes a 35-dBA exterior-to-interior reduction to occur in structures with double glazed windows, whereas the proposed pump station would have no windows (FHWA 2011).[1]

Groundborne Vibration

The proposed Project does not include any substantial vibration sources associated with operation, such as new railroad or subway lines. Thus, the analysis of Project impacts related to vibration focuses on construction activities because they have the greatest potential to generate groundborne vibration affecting nearby receivers, especially during grading and excavation on the Project site. The greatest vibratory sources during construction would be a vibratory roller, bulldozers, and loaded trucks. Vibration estimates for this equipment are based on vibration levels reported by the FTA, presented in Table 8 (FTA 2018). Vibration levels were estimated at the nearest sensitive receiver and compared to the FTA structure damage criteria (see Table 3 in Section 2.5, *Regulatory Setting*).

[1] Windows allow for more noise to pass through compared to a masonry wall.

Table 8 Reference Vibration Levels for Construction Equipment

Equipment	Vibration Level at 25 feet (PPV in/sec)
Vibratory Roller	0.210
Large Bulldozer	0.089
Loaded Trucks	0.076
Small Bulldozer	0.003

PPV = peak particle velocity; in/sec = inches per second

Source: FTA 2018

3.2 Significance Thresholds

The following thresholds from Appendix G of the California Environmental Quality Act (CEQA) Guidelines that pertain to noise impacts were used to evaluate the proposed Project. Based on these criteria, the proposed Project would have a significant impact with respect to noise if it would:

1. Generate a substantial temporary or permanent increase in ambient noise levels in the vicinity of the Project in excess of standards established in the local general plan or noise ordinance, or applicable standards of other agencies.
2. Generate excessive groundborne vibration or groundborne noise levels.
3. For a Project located within the vicinity of a private airstrip or an airport land use plan or, where such a plan has not been adopted, within two miles of a public airport or public use airport, expose people residing or working in the Project area to excessive noise levels.

The following sections indicate the significance criteria relied upon to make the determinations listed above for thresholds (1) and (2). Threshold 3 is not addressed in this analysis because the Notice of Preparation/Initial Study prepared for the proposed Project that implementation of the proposed Project would have no impact related to potential exposure of people residing or working within the Project area to excessive noise levels related to airports. (Metropolitan 2024).

Construction Noise

Neither Metropolitan nor the City has adopted thresholds for evaluating the significance of construction noise impacts. Therefore, this analysis utilizes the FTA criteria for assessing construction noise impacts. The proposed Project would generate a substantial temporary increase in ambient noise levels if construction noise levels would exceed the FTA daytime criteria shown in Table 2 in Section 2.5, *Regulatory Setting*. Based on these criteria, the proposed Project would have the potential to result in a significant construction noise impact if:

- Noise generated by construction activities exceeds 80 dBA L_{eq} over an 8-hour period at residential land uses;
- Noise generated by construction activities exceeds 85 dBA L_{eq} over an 8-hour period at commercial land uses; and/or
- Noise generated by construction activities exceeds 90 dBA L_{eq} over an 8-hour period at industrial land uses.

On-site Operational Noise

Metropolitan has not adopted thresholds for evaluating the significance of on-site operational noise impacts. Therefore, this analysis utilizes the noise limits established by the MPMC, as shown in Table 5 in Section 2.5, *Regulatory Setting*. The proposed Project would have the potential to result in a significant impact related to operational noise if Project operation would cause operational noise levels to exceed the following thresholds:

- Residential properties: 55 dBA L_{eq} from 7:00 a.m. to 10:00 p.m. or 45 dBA L_{eq} from 10:00 p.m. to 7:00 a.m.
- Neighborhood commercial properties: 60 dBA L_{eq} at any time
- Other commercial properties: 65 dBA L_{eq} at any time
- Industrial properties: 70 dBA L_{eq} at any time

Off-site Roadway Noise

Metropolitan has not adopted thresholds of significance for evaluating roadway noise impacts. Off-site roadway noise would result in a significant impact if the project would cause the ambient noise level measured at the property line of affected uses to increase by 3 dBA, which would be a perceptible increase in traffic noise.

Construction Vibration

Neither Metropolitan nor the City has adopted construction vibration standards. Therefore, for the purposes of this analysis, the vibration criteria recommended by the FTA for evaluating the potential for architectural damage to buildings and for vibration annoyance, listed respectively in Table 3 and Table 4 in Section 2.5, *Regulatory Setting*, are used to evaluate construction vibration impacts. Based on FTA guidance, the proposed Project would have the potential to result in a significant vibration impact if:

- Construction activities would generate vibration levels that exceed the FTA building damage threshold level of 0.2 in/sec PPV for non-engineered timber and masonry buildings
- Construction activities would generate vibration levels that exceed the Caltrans “strongly perceptible” human annoyance criteria of 0.1 in/sec PPV

4 Impact Analysis

4.1 Noise Impacts

Threshold 1: Would the Project generate a substantial temporary or permanent increase in ambient noise levels in the vicinity of the Project in excess of standards established in the local general plan or noise ordinance, or applicable standards of other agencies?

Construction Noise

On-site Construction Noise - Daytime

On-site Project construction activities would result in a temporary increase in ambient noise levels in the Project site vicinity at surrounding nearby receivers. Construction noise would be generated by the use of heavy-duty construction equipment.

During Project construction, the nearest off-site noise-sensitive receivers exposed to increased noise levels would be residential uses located in proximity to the Project site. Over the course of a construction day, the highest noise levels would be generated when multiple pieces of construction equipment are being operated concurrently. Construction noise levels associated with the proposed Project were calculated for a scenario in which all construction equipment was assumed to be operating simultaneously within a given construction phase and located at the construction area nearest to the affected receivers to present a conservative impact analysis. This is considered a conservative evaluation because the Project would typically use less overall equipment on a daily basis and, as such, would generate lower noise levels. In reality, the magnitude of construction noise impacts would vary throughout the entire construction period with the greatest impacts occurring when heavy construction equipment is operating near the Project site perimeter. In addition, construction noise estimates do not account for the presence of intervening structures or topography, which could reduce noise levels at the nearest sensitive receivers.

Estimated construction noise levels at the nearest noise-sensitive receivers during the analyzed construction scenarios are shown in Table 9. As shown therein, construction noise levels at the nearest sensitive receivers (residences) would reach as high as approximately 78 dBA L_{eq} (8-hour), which would not exceed the FTA's residential daytime threshold of 80 dBA L_{eq} (8-hour). Construction noise levels at each receiver would vary through the duration of Project construction activities depending on the specific phase of construction in progress. In addition, MPMC Section 4.50.100 indicates construction activities conducted between 7:00 a.m. and 6:00 p.m. Monday through Friday, and between 9:00 a.m. and 6:00 p.m. on Saturdays, Sundays, and holidays are not subject to the City's noise level limits. Therefore, Project construction has a low potential to generate a substantial temporary in ambient noise levels in the vicinity of the Project in excess of applicable standards.

Table 9 Estimated Project Construction Noise Levels

Construction Phase	Distance to Nearest Sensitive Receiver (feet)	Noise Level (dBA L_{eq} 8-hour)	Threshold of Significance (dBA L_{eq} 8-hour)	Exceed Threshold?
Phase 1 - I/O Tower Demolition	650	65	80	No
Phase 1 - Reservoir Cover Demolition	425	67	80	No
Phase 1/2 - Surge Tank Infrastructure Installation	500	65	80	No
Phase 2 - Junction Structure Infrastructure Installation	110	78	80	No
Phase 3 - Pump Station Infrastructure Installation	90	78	80	No

dBA = A-weighted decibel; L_{eq} = average noise level equivalent
RCNM outputs are included in Appendix C

On-site Construction Noise - Nighttime

As detailed in Section 1.2, *Project Description*, occasional nighttime activities would be required for reservoir start-up (i.e., water quality testing and inspections), which occurs 24 hours a day as the reservoir fills up. However, these activities would not involve heavy-duty construction equipment. Therefore, nighttime on-site construction activities would have a low potential to generate a substantial temporary increase in ambient noise levels in the vicinity of the Project site. Furthermore, MPMC Section 4.50.050 exempts public works projects performed by public agencies, or their contractors, that cannot be performed from 7:00 a.m. to 6:00 p.m. Monday through Friday from compliance with the City's Noise Ordinance.

Off-site Construction Traffic

The transport of workers and materials to and from the construction site would temporarily increase noise levels along roadways in the vicinity of the Project site. Peak construction traffic of up to 20 trips is unlikely to result in a doubling of traffic volumes along South Orange Avenue that would result in a significant 3 dBA or greater increase, since the roadway is a minor arterial roadway that provides access between local residential neighborhoods, SR 60 to the south, and commercial areas, schools, and Interstate 10 to the north. Therefore, off-site construction-related traffic would have a low potential to generate a significant increase in noise levels above noise thresholds of significance at noise-sensitive receptors along the anticipated construction travel routes.

Operational Noise

Stationary Equipment Noise

Operational noise sources associated with the proposed Project would include an HVAC unit, pump station pumps, and a standby generator that may be tested during daytime hours as part of routine maintenance activities. While the generator would only be tested on occasion, it was conservatively assumed to be in operation simultaneously with the HVAC unit and pump station pumps. Although

the new standby generator and HVAC unit would replace existing on-site equipment, this analysis conservatively assumes these are new noise sources. In addition, no attenuation from intervening structures or topography was conservatively assumed.

Daytime noise levels from the generator, HVAC unit, and pump station pumps are shown in Table 10, and nighttime noise levels from the HVAC unit and pump station pumps are shown in Table 11. As shown in Table 10, daytime operational noise levels would range from approximately 28 to 42 dBA L_{eq} at the nearest sensitive receivers, which would not exceed the daytime threshold of 55 dBA L_{eq}. As shown in Table 11, nighttime operational noise levels would range from approximately 18 to 32 dBA L_{eq} at the nearest sensitive receivers, which would not exceed the nighttime threshold of 50 dBA L_{eq}. (Nighttime noise levels would be lower than daytime noise levels because the standby generator would not routinely be operated during nighttime hours.) Furthermore, operation of the standby generator during emergency circumstances, such as a power outage, would be exempt from compliance with the City Noise Ordinance pursuant to MPMC Section 4.50.050. Therefore, on-site stationary equipment utilized during Project operation has a low potential to generate a substantial permanent increase in ambient noise levels in the vicinity of the Project in excess of applicable standards.

Table 10 Daytime Operational Noise Levels

Receiver	Generator		HVAC Unit		Pump Station		Combined Noise Level (dBA L_{eq})	Threshold	Exceeds Threshold?
	Distance to Receiver	dBA L_{eq}	Distance to Receiver	dBA L_{eq}	Distance to Receiver	dBA L_{eq}			
Single-family residences across South Orange Avenue	150 feet	41	150 feet	31	90 feet	24	42	55	No
Hillcrest Elementary School	500 feet	31	500 feet	21	180 feet	18	32	55	No
Single-family residences to the south	800 feet	27	800 feet	17	680 feet	6	28	55	No

dBA = A-weighted decibel; L_{eq} = average noise level equivalent; HVAC = heating, ventilation, and air conditioning unit

Table 11 Nighttime Operational Noise Levels

Receiver[1]	HVAC Unit		Pump Station		Combined Noise Level (dBA L_{eq})	Threshold	Exceeds Threshold?
	Distance to Receiver	dBA L_{eq}	Distance to Receiver	dBA L_{eq}			
Single-family residences across South Orange Avenue	150 feet	31	90 feet	24	32	50	No
Single-family residences to the south	800 feet	17	680 feet	6	18	50	No

dBA = A-weighted decibel; L_{eq} = average noise level equivalent; HVAC = heating, ventilation, and air conditioning unit
[1] Hillcrest Elementary School is not considered in the nighttime operational noise analysis because the noise-sensitive activities associated with the school (e.g., classroom instruction) do not occur during nighttime hours (10:00 p.m. to 7:00 a.m.).

Off-site Roadway Noise

Operations and maintenance activities at the Garvey Reservoir, including the frequency of staff visits, would remain the same as existing conditions once Project construction activities are completed. Accordingly, Project operation would not result in a net increase in existing noise levels along local roadways. Therefore, off-site roadway noise during Project operation would have no potential to generate a substantial permanent in ambient noise levels in the vicinity of the Project in excess of applicable standards.

4.2 Vibration Impacts

Threshold 2: Would the Project generate excessive groundborne vibration or ground-borne noise levels?

Construction Vibration

Project construction activities would generate low levels of groundborne vibration due to the operation of heavy equipment. The greatest anticipated sources of vibration during Project construction activities during Phases 1 and 2 would be a vibratory roller and a bulldozer that would be used as close as 110 feet from the nearest residential building to the east. In addition, construction activities during Phase 3 would utilize equipment similar to a large bulldozer as close as 90 feet from the nearest residential building to the east.

Vibration levels at the nearest residence for a vibratory roller and other vibration-generating equipment are shown in Table 12. As shown therein, construction vibration levels would range from less than approximately 0.01 PPV in/sec to 0.04 PPV in/sec at the nearest structures, depending on the piece of equipment in use. These levels of vibration would not exceed the FTA's vibration damage potential threshold for non-engineered timber and masonry building structures of 0.2 PPV in/sec or Caltrans' strongly perceptible threshold of 0.10 PPV in/sec for human annoyance. Other construction equipment not included in the table would generate similar or lower vibration levels. Therefore, Project construction would have a low potential to generate excessive groundborne vibration or ground-borne noise levels.

Table 12 Estimated Construction Vibration Levels

Equipment	Vibration Level at Nearest Residence (PPV in/sec)		Architectural Damage Threshold (PPV in/sec)	Human Annoyance Threshold (PPV in/sec)	Exceed Threshold?
	Phases 1 and 2 Construction (110 feet)	Phase 3 Construction (90 feet)			
Vibratory Roller	0.0412	--	0.2	0.1	No
Large Bulldozer	0.0174	0.0217	0.2	0.1	No
Loaded Trucks	0.0149	0.0186	0.2	0.1	No
Small Bulldozer	0.0006	0.0005	0.2	0.1	No

PPV = peak particle velocity; in/sec = inches per second

Operational Vibration

The proposed Project does not include any substantial vibration sources associated with operation, such as railroad or subway lines. Therefore, Project operation would have no potential to generate excessive groundborne vibration or ground-borne noise levels.

5 References

California Department of Transportation (Caltrans). 2013. *Technical Noise Supplement to the Traffic Noise Analysis Protocol*. (CT-HWANP-RT-13-069.25.2) September 2013. https://dot.ca.gov/-/media/dot-media/programs/environmental-analysis/documents/env/tens-sep2013-a11y.pdf (accessed February 2024).

_____. 2020. *Transportation and Construction Vibration Guidance Manual*. (CT-HWANP-RT-20-365.01.01) April 2020. https://dot.ca.gov/-/media/dot-media/programs/environmental-analysis/documents/env/tcvgm-apr2020-a11y.pdf (accessed February 2024).

Federal Highway Administration (FHWA). 2006. *FHWA Highway Construction Noise Handbook*. (FHWAHEP-06-015; DOT-VNTSC-FHWA-06-02). https://www.fhwa.dot.gov/environment/noise/construction_noise/handbook/ (accessed February 2024).

_____. 2011. Highway Traffic Noise: Analysis and Abatement Guidance (FHWA-HEP-10-025). https://www.fhwa.dot.gov/environment/noise/regulations_and_guidance/analysis_and_abatement_guidance/revguidance.pdf (accessed February 2024).

Federal Transit Administration (FTA). 2018. *Transit Noise and Vibration Impact Assessment*. November. https://www.transit.dot.gov/sites/fta.dot.gov/files/docs/research-innovation/118131/transit-noise-and-vibration-impact-assessment-manual-fta-report-no-0123_0.pdf (accessed February 2024).

Metropolitan Water District of Southern California, The (Metropolitan). 2023. F.E. Weymouth Water Treatment Plant and La Verne Site Improvements Program Draft EIR.

_____. 2024. Proposed Initial Study for the Garvey Reservoir Rehabilitation Project. January 2024.

Monterey Park, City of. 2022. City of Monterey Park Safety Element. https://www.montereypark.ca.gov/DocumentCenter/View/12670/Final-Safety-and-Community-Services-Element- (accessed February 2024).

Padre Dam Municipal Water District. 2015. Ray Stoyer Water Recycling Facility – Phase I Expansion Project Initial Study and Mitigated Negative Declaration. July 2015.

Appendix A

Noise Measurement Data

NM1

- Freq Weight : A
- Time Weight : SLOW
- Level Range : 30-90
- Max dB : 61.5 - 2024/01/16 10:37:40
- Level Range : 30-90
- SEL : 83.0
- Leq : 53.5
-

No.s	Date Time	(dB)
1	2024/01/16 10:35:00	56.0
2	2024/01/16 10:35:03	55.0
3	2024/01/16 10:35:06	56.7
4	2024/01/16 10:35:09	57.1
5	2024/01/16 10:35:12	57.5
6	2024/01/16 10:35:15	57.8
7	2024/01/16 10:35:18	58.0
8	2024/01/16 10:35:21	58.6
9	2024/01/16 10:35:24	58.8
10	2024/01/16 10:35:27	58.4
11	2024/01/16 10:35:30	58.1
12	2024/01/16 10:35:33	58.0
13	2024/01/16 10:35:36	57.8
14	2024/01/16 10:35:39	57.4
15	2024/01/16 10:35:42	57.6
16	2024/01/16 10:35:45	57.7
17	2024/01/16 10:35:48	58.0
18	2024/01/16 10:35:51	57.9
19	2024/01/16 10:35:54	58.0
20	2024/01/16 10:35:57	57.9
21	2024/01/16 10:36:00	57.7
22	2024/01/16 10:36:03	57.6
23	2024/01/16 10:36:06	57.6
24	2024/01/16 10:36:09	57.5
25	2024/01/16 10:36:12	57.5
26	2024/01/16 10:36:15	57.5
27	2024/01/16 10:36:18	57.4
28	2024/01/16 10:36:21	56.9
29	2024/01/16 10:36:24	57.2
30	2024/01/16 10:36:27	57.3
31	2024/01/16 10:36:30	57.6
32	2024/01/16 10:36:33	57.6
33	2024/01/16 10:36:36	57.6
34	2024/01/16 10:36:39	57.4
35	2024/01/16 10:36:42	57.5
36	2024/01/16 10:36:45	57.5
37	2024/01/16 10:36:48	57.5
38	2024/01/16 10:36:51	57.5
39	2024/01/16 10:36:54	57.5
40	2024/01/16 10:36:57	57.5
41	2024/01/16 10:37:00	57.8
42	2024/01/16 10:37:03	57.7
43	2024/01/16 10:37:06	57.9
44	2024/01/16 10:37:09	57.6
45	2024/01/16 10:37:12	57.6
46	2024/01/16 10:37:15	57.5
47	2024/01/16 10:37:18	57.7
48	2024/01/16 10:37:21	58.0
49	2024/01/16 10:37:24	58.0
50	2024/01/16 10:37:27	58.8
51	2024/01/16 10:37:30	59.5
52	2024/01/16 10:37:33	60.1
53	2024/01/16 10:37:36	60.6
54	2024/01/16 10:37:39	59.7
55	2024/01/16 10:37:42	58.3
56	2024/01/16 10:37:45	57.9
57	2024/01/16 10:37:48	57.8
58	2024/01/16 10:37:51	57.5
59	2024/01/16 10:37:54	57.5
60	2024/01/16 10:37:57	57.2
61	2024/01/16 10:38:00	57.0
62	2024/01/16 10:38:03	57.2
63	2024/01/16 10:38:06	57.0
64	2024/01/16 10:38:09	52.4
65	2024/01/16 10:38:12	50.0
66	2024/01/16 10:38:15	49.8
67	2024/01/16 10:38:18	50.3
68	2024/01/16 10:38:21	50.5
69	2024/01/16 10:38:24	49.3
70	2024/01/16 10:38:27	49.1
71	2024/01/16 10:38:30	50.2
72	2024/01/16 10:38:33	50.7
73	2024/01/16 10:38:36	50.8
74	2024/01/16 10:38:39	50.4
75	2024/01/16 10:38:42	51.0
76	2024/01/16 10:38:45	51.5
77	2024/01/16 10:38:48	51.8
78	2024/01/16 10:38:51	50.8
79	2024/01/16 10:38:54	51.7
80	2024/01/16 10:38:57	51.2
81	2024/01/16 10:39:00	51.5
82	2024/01/16 10:39:03	50.9
83	2024/01/16 10:39:06	50.9
84	2024/01/16 10:39:09	51.2

85	2024/01/16	10:39:12	51.4
86	2024/01/16	10:39:15	51.5
87	2024/01/16	10:39:18	51.2
88	2024/01/16	10:39:21	51.6
89	2024/01/16	10:39:24	51.1
90	2024/01/16	10:39:27	51.5
91	2024/01/16	10:39:30	51.3
92	2024/01/16	10:39:33	51.4
93	2024/01/16	10:39:36	52.4
94	2024/01/16	10:39:39	51.9
95	2024/01/16	10:39:42	51.3
96	2024/01/16	10:39:45	50.9
97	2024/01/16	10:39:48	51.4
98	2024/01/16	10:39:51	51.0
99	2024/01/16	10:39:54	51.3
100	2024/01/16	10:39:57	51.3
101	2024/01/16	10:40:00	51.1
102	2024/01/16	10:40:03	51.2
103	2024/01/16	10:40:06	51.4
104	2024/01/16	10:40:09	50.1
105	2024/01/16	10:40:12	49.0
106	2024/01/16	10:40:15	51.0
107	2024/01/16	10:40:18	51.5
108	2024/01/16	10:40:21	51.3
109	2024/01/16	10:40:24	51.4
110	2024/01/16	10:40:27	51.1
111	2024/01/16	10:40:30	51.1
112	2024/01/16	10:40:33	50.8
113	2024/01/16	10:40:36	51.0
114	2024/01/16	10:40:39	51.2
115	2024/01/16	10:40:42	51.2
116	2024/01/16	10:40:45	50.3
117	2024/01/16	10:40:48	51.5
118	2024/01/16	10:40:51	51.9
119	2024/01/16	10:40:54	51.4
120	2024/01/16	10:40:57	51.1
121	2024/01/16	10:41:00	51.6
122	2024/01/16	10:41:03	51.1
123	2024/01/16	10:41:06	51.3
124	2024/01/16	10:41:09	50.7
125	2024/01/16	10:41:12	51.5
126	2024/01/16	10:41:15	51.0
127	2024/01/16	10:41:18	51.1
128	2024/01/16	10:41:21	50.9
129	2024/01/16	10:41:24	50.9
130	2024/01/16	10:41:27	51.0
131	2024/01/16	10:41:30	50.7
132	2024/01/16	10:41:33	50.6
133	2024/01/16	10:41:36	50.8
134	2024/01/16	10:41:39	50.7
135	2024/01/16	10:41:42	48.1
136	2024/01/16	10:41:45	47.0
137	2024/01/16	10:41:48	49.4
138	2024/01/16	10:41:51	49.7
139	2024/01/16	10:41:54	49.8
140	2024/01/16	10:41:57	50.8
141	2024/01/16	10:42:00	50.4
142	2024/01/16	10:42:03	50.5
143	2024/01/16	10:42:06	51.2
144	2024/01/16	10:42:09	50.4
145	2024/01/16	10:42:12	49.7
146	2024/01/16	10:42:15	50.2
147	2024/01/16	10:42:18	50.1
148	2024/01/16	10:42:21	50.4
149	2024/01/16	10:42:24	48.6
150	2024/01/16	10:42:27	51.4
151	2024/01/16	10:42:30	51.0
152	2024/01/16	10:42:33	50.8
153	2024/01/16	10:42:36	50.3
154	2024/01/16	10:42:39	49.9
155	2024/01/16	10:42:42	48.2
156	2024/01/16	10:42:45	46.1
157	2024/01/16	10:42:48	46.5
158	2024/01/16	10:42:51	47.1
159	2024/01/16	10:42:54	48.3
160	2024/01/16	10:42:57	49.8
161	2024/01/16	10:43:00	49.7
162	2024/01/16	10:43:03	48.8
163	2024/01/16	10:43:06	51.1
164	2024/01/16	10:43:09	51.2
165	2024/01/16	10:43:12	51.3
166	2024/01/16	10:43:15	50.1
167	2024/01/16	10:43:18	51.1
168	2024/01/16	10:43:21	51.2
169	2024/01/16	10:43:24	51.7
170	2024/01/16	10:43:27	51.4
171	2024/01/16	10:43:30	50.6
172	2024/01/16	10:43:33	51.1
173	2024/01/16	10:43:36	51.1
174	2024/01/16	10:43:39	50.5
175	2024/01/16	10:43:42	51.1
176	2024/01/16	10:43:45	51.3
177	2024/01/16	10:43:48	51.5
178	2024/01/16	10:43:51	51.1
179	2024/01/16	10:43:54	51.1
180	2024/01/16	10:43:57	51.0
181	2024/01/16	10:44:00	50.9
182	2024/01/16	10:44:03	50.8

183	2024/01/16	10:44:06	51.3
184	2024/01/16	10:44:09	51.0
185	2024/01/16	10:44:12	51.1
186	2024/01/16	10:44:15	50.8
187	2024/01/16	10:44:18	51.2
188	2024/01/16	10:44:21	51.5
189	2024/01/16	10:44:24	51.5
190	2024/01/16	10:44:27	51.4
191	2024/01/16	10:44:30	51.2
192	2024/01/16	10:44:33	51.2
193	2024/01/16	10:44:36	51.4
194	2024/01/16	10:44:39	51.5
195	2024/01/16	10:44:42	51.2
196	2024/01/16	10:44:45	51.2
197	2024/01/16	10:44:48	51.3
198	2024/01/16	10:44:51	51.2
199	2024/01/16	10:44:54	51.3
200	2024/01/16	10:44:57	51.4
201	2024/01/16	10:45:00	51.3
202	2024/01/16	10:45:03	51.3
203	2024/01/16	10:45:06	51.6
204	2024/01/16	10:45:09	51.2
205	2024/01/16	10:45:12	51.1
206	2024/01/16	10:45:15	51.2
207	2024/01/16	10:45:18	51.7
208	2024/01/16	10:45:21	51.8
209	2024/01/16	10:45:24	52.1
210	2024/01/16	10:45:27	52.2
211	2024/01/16	10:45:30	51.4
212	2024/01/16	10:45:33	51.1
213	2024/01/16	10:45:36	51.4
214	2024/01/16	10:45:39	51.0
215	2024/01/16	10:45:42	50.8
216	2024/01/16	10:45:45	51.1
217	2024/01/16	10:45:48	51.1
218	2024/01/16	10:45:51	51.6
219	2024/01/16	10:45:54	52.3
220	2024/01/16	10:45:57	52.0
221	2024/01/16	10:46:00	52.0
222	2024/01/16	10:46:03	51.7
223	2024/01/16	10:46:06	51.3
224	2024/01/16	10:46:09	50.9
225	2024/01/16	10:46:12	50.9
226	2024/01/16	10:46:15	50.9
227	2024/01/16	10:46:18	51.2
228	2024/01/16	10:46:21	51.2
229	2024/01/16	10:46:24	51.1
230	2024/01/16	10:46:27	50.9
231	2024/01/16	10:46:30	50.9
232	2024/01/16	10:46:33	50.8
233	2024/01/16	10:46:36	50.7
234	2024/01/16	10:46:39	50.6
235	2024/01/16	10:46:42	51.1
236	2024/01/16	10:46:45	50.9
237	2024/01/16	10:46:48	51.0
238	2024/01/16	10:46:51	50.9
239	2024/01/16	10:46:54	50.8
240	2024/01/16	10:46:57	51.2
241	2024/01/16	10:47:00	51.2
242	2024/01/16	10:47:03	51.6
243	2024/01/16	10:47:06	51.7
244	2024/01/16	10:47:09	51.1
245	2024/01/16	10:47:12	51.1
246	2024/01/16	10:47:15	51.2
247	2024/01/16	10:47:18	51.3
248	2024/01/16	10:47:21	51.2
249	2024/01/16	10:47:24	51.2
250	2024/01/16	10:47:27	51.0
251	2024/01/16	10:47:30	51.1
252	2024/01/16	10:47:33	51.0
253	2024/01/16	10:47:36	51.5
254	2024/01/16	10:47:39	51.3
255	2024/01/16	10:47:42	50.9
256	2024/01/16	10:47:45	51.0
257	2024/01/16	10:47:48	50.9
258	2024/01/16	10:47:51	50.6
259	2024/01/16	10:47:54	50.8
260	2024/01/16	10:47:57	51.1
261	2024/01/16	10:48:00	50.9
262	2024/01/16	10:48:03	50.8
263	2024/01/16	10:48:06	51.1
264	2024/01/16	10:48:09	50.7
265	2024/01/16	10:48:12	50.7
266	2024/01/16	10:48:15	50.6
267	2024/01/16	10:48:18	51.3
268	2024/01/16	10:48:21	51.1
269	2024/01/16	10:48:24	50.8
270	2024/01/16	10:48:27	50.4
271	2024/01/16	10:48:30	50.3
272	2024/01/16	10:48:33	50.6
273	2024/01/16	10:48:36	51.0
274	2024/01/16	10:48:39	50.7
275	2024/01/16	10:48:42	50.8
276	2024/01/16	10:48:45	50.7
277	2024/01/16	10:48:48	51.2
278	2024/01/16	10:48:51	50.9
279	2024/01/16	10:48:54	51.2
280	2024/01/16	10:48:57	51.0

281	2024/01/16	10:49:00	51.1
282	2024/01/16	10:49:03	51.0
283	2024/01/16	10:49:06	51.0
284	2024/01/16	10:49:09	50.7
285	2024/01/16	10:49:12	50.8
286	2024/01/16	10:49:15	50.2
287	2024/01/16	10:49:18	50.8
288	2024/01/16	10:49:21	51.0
289	2024/01/16	10:49:24	51.2
290	2024/01/16	10:49:27	51.0
291	2024/01/16	10:49:30	50.8
292	2024/01/16	10:49:33	50.8
293	2024/01/16	10:49:36	51.1
294	2024/01/16	10:49:39	50.6
295	2024/01/16	10:49:42	50.4
296	2024/01/16	10:49:45	51.0
297	2024/01/16	10:49:48	50.8
298	2024/01/16	10:49:51	51.1
299	2024/01/16	10:49:54	51.1
300	2024/01/16	10:49:57	51.2

NM2

- Freq Weight : A
- Time Weight : SLOW
- Level Range : 30-90
- Max dB : 72.6 - 2024/01/16 11:12:12
- Level Range : 30-90
- SEL : 89.6
- Leq : 60.1
-

No.s	Date Time	(dB)
1	2024/01/16 11:04:53	51.6
2	2024/01/16 11:04:56	59.3
3	2024/01/16 11:04:59	58.9
4	2024/01/16 11:05:02	48.3
5	2024/01/16 11:05:05	46.8
6	2024/01/16 11:05:08	46.8
7	2024/01/16 11:05:11	58.4
8	2024/01/16 11:05:14	56.6
9	2024/01/16 11:05:17	50.5
10	2024/01/16 11:05:20	57.9
11	2024/01/16 11:05:23	64.9
12	2024/01/16 11:05:26	58.6
13	2024/01/16 11:05:29	65.4
14	2024/01/16 11:05:32	67.3
15	2024/01/16 11:05:35	56.8
16	2024/01/16 11:05:38	55.3
17	2024/01/16 11:05:41	63.5
18	2024/01/16 11:05:44	66.0
19	2024/01/16 11:05:47	56.4
20	2024/01/16 11:05:50	63.4
21	2024/01/16 11:05:53	55.1
22	2024/01/16 11:05:56	44.7
23	2024/01/16 11:05:59	43.6
24	2024/01/16 11:06:02	41.7
25	2024/01/16 11:06:05	40.9
26	2024/01/16 11:06:08	40.8
27	2024/01/16 11:06:11	40.4
28	2024/01/16 11:06:14	40.9
29	2024/01/16 11:06:17	43.9
30	2024/01/16 11:06:20	42.2
31	2024/01/16 11:06:23	45.0
32	2024/01/16 11:06:26	46.7
33	2024/01/16 11:06:29	55.3
34	2024/01/16 11:06:32	57.6
35	2024/01/16 11:06:35	47.8
36	2024/01/16 11:06:38	49.9
37	2024/01/16 11:06:41	59.0
38	2024/01/16 11:06:44	64.5
39	2024/01/16 11:06:47	54.7
40	2024/01/16 11:06:50	48.5
41	2024/01/16 11:06:53	55.8
42	2024/01/16 11:06:56	45.6
43	2024/01/16 11:06:59	43.0
44	2024/01/16 11:07:02	61.5
45	2024/01/16 11:07:05	50.9
46	2024/01/16 11:07:08	45.2
47	2024/01/16 11:07:11	52.8
48	2024/01/16 11:07:14	66.4
49	2024/01/16 11:07:17	60.6
50	2024/01/16 11:07:20	50.8
51	2024/01/16 11:07:23	46.9
52	2024/01/16 11:07:26	51.3
53	2024/01/16 11:07:29	59.5
54	2024/01/16 11:07:32	58.6
55	2024/01/16 11:07:35	48.5
56	2024/01/16 11:07:38	44.1
57	2024/01/16 11:07:41	41.1
58	2024/01/16 11:07:44	43.7
59	2024/01/16 11:07:47	49.2
60	2024/01/16 11:07:50	62.4
61	2024/01/16 11:07:53	60.7
62	2024/01/16 11:07:56	52.2
63	2024/01/16 11:07:59	62.4
64	2024/01/16 11:08:02	58.0
65	2024/01/16 11:08:05	58.3
66	2024/01/16 11:08:08	54.7
67	2024/01/16 11:08:11	47.0
68	2024/01/16 11:08:14	44.2
69	2024/01/16 11:08:17	42.8
70	2024/01/16 11:08:20	43.1
71	2024/01/16 11:08:23	48.3
72	2024/01/16 11:08:26	60.5
73	2024/01/16 11:08:29	67.1
74	2024/01/16 11:08:32	56.7
75	2024/01/16 11:08:35	55.2
76	2024/01/16 11:08:38	65.4
77	2024/01/16 11:08:41	63.5
78	2024/01/16 11:08:44	61.9
79	2024/01/16 11:08:47	52.0
80	2024/01/16 11:08:50	48.5
81	2024/01/16 11:08:53	48.6
82	2024/01/16 11:08:56	59.9
83	2024/01/16 11:08:59	61.7
84	2024/01/16 11:09:02	53.2

85	2024/01/16	11:09:05	43.7
86	2024/01/16	11:09:08	43.2
87	2024/01/16	11:09:11	46.1
88	2024/01/16	11:09:14	59.7
89	2024/01/16	11:09:17	60.6
90	2024/01/16	11:09:20	51.5
91	2024/01/16	11:09:23	46.1
92	2024/01/16	11:09:26	41.5
93	2024/01/16	11:09:29	41.8
94	2024/01/16	11:09:32	46.6
95	2024/01/16	11:09:35	61.4
96	2024/01/16	11:09:38	59.2
97	2024/01/16	11:09:41	50.4
98	2024/01/16	11:09:44	46.1
99	2024/01/16	11:09:47	46.5
100	2024/01/16	11:09:50	54.7
101	2024/01/16	11:09:53	68.7
102	2024/01/16	11:09:56	65.8
103	2024/01/16	11:09:59	60.1
104	2024/01/16	11:10:02	52.0
105	2024/01/16	11:10:05	49.3
106	2024/01/16	11:10:08	44.7
107	2024/01/16	11:10:11	42.5
108	2024/01/16	11:10:14	42.6
109	2024/01/16	11:10:17	45.9
110	2024/01/16	11:10:20	55.7
111	2024/01/16	11:10:23	66.5
112	2024/01/16	11:10:26	56.5
113	2024/01/16	11:10:29	50.1
114	2024/01/16	11:10:32	43.0
115	2024/01/16	11:10:35	41.9
116	2024/01/16	11:10:38	41.6
117	2024/01/16	11:10:41	40.4
118	2024/01/16	11:10:44	39.7
119	2024/01/16	11:10:47	41.6
120	2024/01/16	11:10:50	45.2
121	2024/01/16	11:10:53	49.2
122	2024/01/16	11:10:56	63.8
123	2024/01/16	11:10:59	63.3
124	2024/01/16	11:11:02	51.8
125	2024/01/16	11:11:05	56.7
126	2024/01/16	11:11:08	56.3
127	2024/01/16	11:11:11	49.7
128	2024/01/16	11:11:14	45.2
129	2024/01/16	11:11:17	46.1
130	2024/01/16	11:11:20	45.5
131	2024/01/16	11:11:23	55.7
132	2024/01/16	11:11:26	60.5
133	2024/01/16	11:11:29	61.2
134	2024/01/16	11:11:32	62.2
135	2024/01/16	11:11:35	56.1
136	2024/01/16	11:11:38	64.0
137	2024/01/16	11:11:41	57.1
138	2024/01/16	11:11:44	66.0
139	2024/01/16	11:11:47	72.3
140	2024/01/16	11:11:50	67.6
141	2024/01/16	11:11:53	58.2
142	2024/01/16	11:11:56	66.3
143	2024/01/16	11:11:59	59.3
144	2024/01/16	11:12:02	53.5
145	2024/01/16	11:12:05	56.7
146	2024/01/16	11:12:08	66.5
147	2024/01/16	11:12:11	67.2
148	2024/01/16	11:12:14	68.0
149	2024/01/16	11:12:17	59.1
150	2024/01/16	11:12:20	51.8
151	2024/01/16	11:12:23	59.3
152	2024/01/16	11:12:26	63.3
153	2024/01/16	11:12:29	56.4
154	2024/01/16	11:12:32	68.5
155	2024/01/16	11:12:35	57.8
156	2024/01/16	11:12:38	53.5
157	2024/01/16	11:12:41	50.0
158	2024/01/16	11:12:44	61.1
159	2024/01/16	11:12:47	65.9
160	2024/01/16	11:12:50	62.6
161	2024/01/16	11:12:53	67.9
162	2024/01/16	11:12:56	61.3
163	2024/01/16	11:12:59	51.7
164	2024/01/16	11:13:02	46.7
165	2024/01/16	11:13:05	45.2
166	2024/01/16	11:13:08	45.3
167	2024/01/16	11:13:11	44.2
168	2024/01/16	11:13:14	42.5
169	2024/01/16	11:13:17	43.8
170	2024/01/16	11:13:20	42.8
171	2024/01/16	11:13:23	47.2
172	2024/01/16	11:13:26	60.9
173	2024/01/16	11:13:29	65.8
174	2024/01/16	11:13:32	58.5
175	2024/01/16	11:13:35	66.9
176	2024/01/16	11:13:38	62.0
177	2024/01/16	11:13:41	52.9
178	2024/01/16	11:13:44	46.7
179	2024/01/16	11:13:47	45.6
180	2024/01/16	11:13:50	52.6
181	2024/01/16	11:13:53	53.9
182	2024/01/16	11:13:56	49.4

183	2024/01/16	11:13:59	59.8
184	2024/01/16	11:14:02	61.8
185	2024/01/16	11:14:05	55.0
186	2024/01/16	11:14:08	62.2
187	2024/01/16	11:14:11	57.4
188	2024/01/16	11:14:14	61.0
189	2024/01/16	11:14:17	54.8
190	2024/01/16	11:14:20	44.4
191	2024/01/16	11:14:23	41.3
192	2024/01/16	11:14:26	45.7
193	2024/01/16	11:14:29	62.3
194	2024/01/16	11:14:32	56.8
195	2024/01/16	11:14:35	49.2
196	2024/01/16	11:14:38	50.7
197	2024/01/16	11:14:41	62.6
198	2024/01/16	11:14:44	62.6
199	2024/01/16	11:14:47	66.9
200	2024/01/16	11:14:50	61.6
201	2024/01/16	11:14:53	52.3
202	2024/01/16	11:14:56	44.8
203	2024/01/16	11:14:59	40.5
204	2024/01/16	11:15:02	38.6
205	2024/01/16	11:15:05	37.5
206	2024/01/16	11:15:08	37.8
207	2024/01/16	11:15:11	38.0
208	2024/01/16	11:15:14	37.8
209	2024/01/16	11:15:17	37.8
210	2024/01/16	11:15:20	37.7
211	2024/01/16	11:15:23	37.1
212	2024/01/16	11:15:26	37.8
213	2024/01/16	11:15:29	40.3
214	2024/01/16	11:15:32	47.8
215	2024/01/16	11:15:35	63.4
216	2024/01/16	11:15:38	66.7
217	2024/01/16	11:15:41	58.2
218	2024/01/16	11:15:44	64.8
219	2024/01/16	11:15:47	59.4
220	2024/01/16	11:15:50	66.8
221	2024/01/16	11:15:53	56.9
222	2024/01/16	11:15:56	50.8
223	2024/01/16	11:15:59	45.8
224	2024/01/16	11:16:02	41.8
225	2024/01/16	11:16:05	39.0
226	2024/01/16	11:16:08	40.9
227	2024/01/16	11:16:11	46.7
228	2024/01/16	11:16:14	59.6
229	2024/01/16	11:16:17	60.7
230	2024/01/16	11:16:20	51.4
231	2024/01/16	11:16:23	51.1
232	2024/01/16	11:16:26	63.5
233	2024/01/16	11:16:29	60.2
234	2024/01/16	11:16:32	59.7
235	2024/01/16	11:16:35	57.3
236	2024/01/16	11:16:38	53.9
237	2024/01/16	11:16:41	48.2
238	2024/01/16	11:16:44	56.5
239	2024/01/16	11:16:47	59.1
240	2024/01/16	11:16:50	48.4
241	2024/01/16	11:16:53	42.2
242	2024/01/16	11:16:56	42.8
243	2024/01/16	11:16:59	44.0
244	2024/01/16	11:17:02	45.5
245	2024/01/16	11:17:05	64.0
246	2024/01/16	11:17:08	65.6
247	2024/01/16	11:17:11	64.0
248	2024/01/16	11:17:14	59.3
249	2024/01/16	11:17:17	60.9
250	2024/01/16	11:17:20	52.3
251	2024/01/16	11:17:23	61.9
252	2024/01/16	11:17:26	65.3
253	2024/01/16	11:17:29	59.4
254	2024/01/16	11:17:32	50.3
255	2024/01/16	11:17:35	49.1
256	2024/01/16	11:17:38	58.7
257	2024/01/16	11:17:41	58.2
258	2024/01/16	11:17:44	48.2
259	2024/01/16	11:17:47	48.6
260	2024/01/16	11:17:50	64.1
261	2024/01/16	11:17:53	65.1
262	2024/01/16	11:17:56	54.8
263	2024/01/16	11:17:59	49.4
264	2024/01/16	11:18:02	44.7
265	2024/01/16	11:18:05	40.5
266	2024/01/16	11:18:08	41.2
267	2024/01/16	11:18:11	42.0
268	2024/01/16	11:18:14	41.6
269	2024/01/16	11:18:17	40.1
270	2024/01/16	11:18:20	39.0
271	2024/01/16	11:18:23	38.1
272	2024/01/16	11:18:26	42.7
273	2024/01/16	11:18:29	50.3
274	2024/01/16	11:18:32	62.8
275	2024/01/16	11:18:35	66.2
276	2024/01/16	11:18:38	63.8
277	2024/01/16	11:18:41	55.3
278	2024/01/16	11:18:44	54.6
279	2024/01/16	11:18:47	67.7
280	2024/01/16	11:18:50	64.4

281	2024/01/16	11:18:53	56.8
282	2024/01/16	11:18:56	50.2
283	2024/01/16	11:18:59	46.6
284	2024/01/16	11:19:02	49.8
285	2024/01/16	11:19:05	52.2
286	2024/01/16	11:19:08	62.9
287	2024/01/16	11:19:11	57.8
288	2024/01/16	11:19:14	61.3
289	2024/01/16	11:19:17	67.3
290	2024/01/16	11:19:20	63.6
291	2024/01/16	11:19:23	64.3
292	2024/01/16	11:19:26	61.8
293	2024/01/16	11:19:29	65.5
294	2024/01/16	11:19:32	58.7
295	2024/01/16	11:19:35	67.5
296	2024/01/16	11:19:38	57.9
297	2024/01/16	11:19:41	52.9
298	2024/01/16	11:19:44	53.8
299	2024/01/16	11:19:47	61.1
300	2024/01/16	11:19:50	51.7

NM3

- Freq Weight : A
- Time Weight : SLOW
- Level Range : 30-90
- Max dB : 63.8 - 2024/01/16 11:37:45
- Level Range : 30-90
- SEL : 85.2
- Leq : 55.7
-

No.s	Date Time	(dB)
1	2024/01/16 11:31:45	56.0
2	2024/01/16 11:31:48	56.2
3	2024/01/16 11:31:51	56.4
4	2024/01/16 11:31:54	55.5
5	2024/01/16 11:31:57	55.3
6	2024/01/16 11:32:00	55.3
7	2024/01/16 11:32:03	55.4
8	2024/01/16 11:32:06	55.5
9	2024/01/16 11:32:09	55.4
10	2024/01/16 11:32:12	55.4
11	2024/01/16 11:32:15	55.2
12	2024/01/16 11:32:18	55.3
13	2024/01/16 11:32:21	55.4
14	2024/01/16 11:32:24	55.3
15	2024/01/16 11:32:27	55.3
16	2024/01/16 11:32:30	55.3
17	2024/01/16 11:32:33	55.4
18	2024/01/16 11:32:36	55.7
19	2024/01/16 11:32:39	55.5
20	2024/01/16 11:32:42	55.5
21	2024/01/16 11:32:45	56.1
22	2024/01/16 11:32:48	55.9
23	2024/01/16 11:32:51	55.5
24	2024/01/16 11:32:54	55.3
25	2024/01/16 11:32:57	54.8
26	2024/01/16 11:33:00	54.9
27	2024/01/16 11:33:03	55.1
28	2024/01/16 11:33:06	55.1
29	2024/01/16 11:33:09	55.1
30	2024/01/16 11:33:12	55.1
31	2024/01/16 11:33:15	55.2
32	2024/01/16 11:33:18	55.1
33	2024/01/16 11:33:21	55.2
34	2024/01/16 11:33:24	55.0
35	2024/01/16 11:33:27	55.1
36	2024/01/16 11:33:30	55.1
37	2024/01/16 11:33:33	55.0
38	2024/01/16 11:33:36	55.1
39	2024/01/16 11:33:39	55.3
40	2024/01/16 11:33:42	55.1
41	2024/01/16 11:33:45	55.4
42	2024/01/16 11:33:48	55.5
43	2024/01/16 11:33:51	55.7
44	2024/01/16 11:33:54	55.5
45	2024/01/16 11:33:57	55.1
46	2024/01/16 11:34:00	55.0
47	2024/01/16 11:34:03	55.2
48	2024/01/16 11:34:06	55.2
49	2024/01/16 11:34:09	55.5
50	2024/01/16 11:34:12	55.4
51	2024/01/16 11:34:15	55.4
52	2024/01/16 11:34:18	55.4
53	2024/01/16 11:34:21	55.4
54	2024/01/16 11:34:24	55.2
55	2024/01/16 11:34:27	55.2
56	2024/01/16 11:34:30	55.3
57	2024/01/16 11:34:33	55.6
58	2024/01/16 11:34:36	55.5
59	2024/01/16 11:34:39	55.4
60	2024/01/16 11:34:42	55.5
61	2024/01/16 11:34:45	55.8
62	2024/01/16 11:34:48	55.4
63	2024/01/16 11:34:51	55.4
64	2024/01/16 11:34:54	55.2
65	2024/01/16 11:34:57	55.1
66	2024/01/16 11:35:00	55.0
67	2024/01/16 11:35:03	55.4
68	2024/01/16 11:35:06	55.4
69	2024/01/16 11:35:09	55.3
70	2024/01/16 11:35:12	55.5
71	2024/01/16 11:35:15	55.5
72	2024/01/16 11:35:18	55.5
73	2024/01/16 11:35:21	55.7
74	2024/01/16 11:35:24	55.3
75	2024/01/16 11:35:27	55.3
76	2024/01/16 11:35:30	55.3
77	2024/01/16 11:35:33	56.2
78	2024/01/16 11:35:36	55.6
79	2024/01/16 11:35:39	56.0
80	2024/01/16 11:35:42	55.6
81	2024/01/16 11:35:45	56.4
82	2024/01/16 11:35:48	55.6
83	2024/01/16 11:35:51	57.1
84	2024/01/16 11:35:54	55.3

85	2024/01/16	11:35:57	55.6
86	2024/01/16	11:36:00	55.5
87	2024/01/16	11:36:03	55.5
88	2024/01/16	11:36:06	55.6
89	2024/01/16	11:36:09	55.7
90	2024/01/16	11:36:12	55.6
91	2024/01/16	11:36:15	55.4
92	2024/01/16	11:36:18	55.4
93	2024/01/16	11:36:21	55.4
94	2024/01/16	11:36:24	55.3
95	2024/01/16	11:36:27	55.3
96	2024/01/16	11:36:30	55.3
97	2024/01/16	11:36:33	55.5
98	2024/01/16	11:36:36	55.4
99	2024/01/16	11:36:39	55.5
100	2024/01/16	11:36:42	55.8
101	2024/01/16	11:36:45	56.2
102	2024/01/16	11:36:48	57.9
103	2024/01/16	11:36:51	59.3
104	2024/01/16	11:36:54	56.7
105	2024/01/16	11:36:57	56.3
106	2024/01/16	11:37:00	56.3
107	2024/01/16	11:37:03	59.3
108	2024/01/16	11:37:06	58.0
109	2024/01/16	11:37:09	56.0
110	2024/01/16	11:37:12	55.6
111	2024/01/16	11:37:15	55.4
112	2024/01/16	11:37:18	55.4
113	2024/01/16	11:37:21	55.3
114	2024/01/16	11:37:24	55.2
115	2024/01/16	11:37:27	55.4
116	2024/01/16	11:37:30	55.3
117	2024/01/16	11:37:33	58.1
118	2024/01/16	11:37:36	55.7
119	2024/01/16	11:37:39	55.3
120	2024/01/16	11:37:42	62.4
121	2024/01/16	11:37:45	60.3
122	2024/01/16	11:37:48	57.9
123	2024/01/16	11:37:51	57.8
124	2024/01/16	11:37:54	55.7
125	2024/01/16	11:37:57	55.4
126	2024/01/16	11:38:00	55.3
127	2024/01/16	11:38:03	55.2
128	2024/01/16	11:38:06	55.2
129	2024/01/16	11:38:09	55.2
130	2024/01/16	11:38:12	55.2
131	2024/01/16	11:38:15	55.1
132	2024/01/16	11:38:18	55.1
133	2024/01/16	11:38:21	55.2
134	2024/01/16	11:38:24	55.0
135	2024/01/16	11:38:27	55.1
136	2024/01/16	11:38:30	55.1
137	2024/01/16	11:38:33	55.2
138	2024/01/16	11:38:36	55.1
139	2024/01/16	11:38:39	55.2
140	2024/01/16	11:38:42	55.2
141	2024/01/16	11:38:45	55.1
142	2024/01/16	11:38:48	55.6
143	2024/01/16	11:38:51	55.5
144	2024/01/16	11:38:54	54.8
145	2024/01/16	11:38:57	54.8
146	2024/01/16	11:39:00	55.0
147	2024/01/16	11:39:03	55.1
148	2024/01/16	11:39:06	55.1
149	2024/01/16	11:39:09	55.1
150	2024/01/16	11:39:12	55.1
151	2024/01/16	11:39:15	54.9
152	2024/01/16	11:39:18	55.1
153	2024/01/16	11:39:21	55.3
154	2024/01/16	11:39:24	55.0
155	2024/01/16	11:39:27	55.1
156	2024/01/16	11:39:30	55.0
157	2024/01/16	11:39:33	55.1
158	2024/01/16	11:39:36	55.0
159	2024/01/16	11:39:39	55.1
160	2024/01/16	11:39:42	55.0
161	2024/01/16	11:39:45	55.2
162	2024/01/16	11:39:48	55.2
163	2024/01/16	11:39:51	55.4
164	2024/01/16	11:39:54	54.9
165	2024/01/16	11:39:57	55.0
166	2024/01/16	11:40:00	55.1
167	2024/01/16	11:40:03	55.1
168	2024/01/16	11:40:06	55.2
169	2024/01/16	11:40:09	55.2
170	2024/01/16	11:40:12	55.4
171	2024/01/16	11:40:15	55.5
172	2024/01/16	11:40:18	55.2
173	2024/01/16	11:40:21	55.2
174	2024/01/16	11:40:24	55.1
175	2024/01/16	11:40:27	55.2
176	2024/01/16	11:40:30	55.3
177	2024/01/16	11:40:33	55.4
178	2024/01/16	11:40:36	55.2
179	2024/01/16	11:40:39	55.6
180	2024/01/16	11:40:42	55.7
181	2024/01/16	11:40:45	55.8
182	2024/01/16	11:40:48	55.4

183	2024/01/16	11:40:51	55.4
184	2024/01/16	11:40:54	57.7
185	2024/01/16	11:40:57	61.6
186	2024/01/16	11:41:00	57.7
187	2024/01/16	11:41:03	58.1
188	2024/01/16	11:41:06	56.7
189	2024/01/16	11:41:09	57.3
190	2024/01/16	11:41:12	57.4
191	2024/01/16	11:41:15	57.7
192	2024/01/16	11:41:18	58.5
193	2024/01/16	11:41:21	57.4
194	2024/01/16	11:41:24	56.1
195	2024/01/16	11:41:27	59.0
196	2024/01/16	11:41:30	58.1
197	2024/01/16	11:41:33	59.1
198	2024/01/16	11:41:36	59.7
199	2024/01/16	11:41:39	56.1
200	2024/01/16	11:41:42	57.7
201	2024/01/16	11:41:45	57.2
202	2024/01/16	11:41:48	57.8
203	2024/01/16	11:41:51	56.3
204	2024/01/16	11:41:54	56.1
205	2024/01/16	11:41:57	56.5
206	2024/01/16	11:42:00	56.0
207	2024/01/16	11:42:03	57.5
208	2024/01/16	11:42:06	56.0
209	2024/01/16	11:42:09	55.4
210	2024/01/16	11:42:12	56.6
211	2024/01/16	11:42:15	58.6
212	2024/01/16	11:42:18	55.7
213	2024/01/16	11:42:21	56.3
214	2024/01/16	11:42:24	55.3
215	2024/01/16	11:42:27	55.0
216	2024/01/16	11:42:30	54.8
217	2024/01/16	11:42:33	54.9
218	2024/01/16	11:42:36	57.1
219	2024/01/16	11:42:39	57.5
220	2024/01/16	11:42:42	56.0
221	2024/01/16	11:42:45	58.7
222	2024/01/16	11:42:48	56.5
223	2024/01/16	11:42:51	58.0
224	2024/01/16	11:42:54	58.9
225	2024/01/16	11:42:57	55.2
226	2024/01/16	11:43:00	54.6
227	2024/01/16	11:43:03	54.7
228	2024/01/16	11:43:06	54.7
229	2024/01/16	11:43:09	54.8
230	2024/01/16	11:43:12	54.9
231	2024/01/16	11:43:15	54.7
232	2024/01/16	11:43:18	55.1
233	2024/01/16	11:43:21	54.7
234	2024/01/16	11:43:24	54.6
235	2024/01/16	11:43:27	54.7
236	2024/01/16	11:43:30	54.7
237	2024/01/16	11:43:33	55.2
238	2024/01/16	11:43:36	55.3
239	2024/01/16	11:43:39	55.0
240	2024/01/16	11:43:42	54.9
241	2024/01/16	11:43:45	54.9
242	2024/01/16	11:43:48	54.8
243	2024/01/16	11:43:51	54.9
244	2024/01/16	11:43:54	54.6
245	2024/01/16	11:43:57	54.7
246	2024/01/16	11:44:00	54.7
247	2024/01/16	11:44:03	54.8
248	2024/01/16	11:44:06	54.8
249	2024/01/16	11:44:09	54.9
250	2024/01/16	11:44:12	54.9
251	2024/01/16	11:44:15	54.9
252	2024/01/16	11:44:18	54.8
253	2024/01/16	11:44:21	54.8
254	2024/01/16	11:44:24	54.8
255	2024/01/16	11:44:27	54.8
256	2024/01/16	11:44:30	54.8
257	2024/01/16	11:44:33	54.9
258	2024/01/16	11:44:36	54.8
259	2024/01/16	11:44:39	54.8
260	2024/01/16	11:44:42	54.9
261	2024/01/16	11:44:45	54.7
262	2024/01/16	11:44:48	54.8
263	2024/01/16	11:44:51	54.8
264	2024/01/16	11:44:54	54.5
265	2024/01/16	11:44:57	54.1
266	2024/01/16	11:45:00	54.5
267	2024/01/16	11:45:03	54.7
268	2024/01/16	11:45:06	54.8
269	2024/01/16	11:45:09	54.8
270	2024/01/16	11:45:12	54.9
271	2024/01/16	11:45:15	54.8
272	2024/01/16	11:45:18	54.9
273	2024/01/16	11:45:21	54.8
274	2024/01/16	11:45:24	54.7
275	2024/01/16	11:45:27	54.7
276	2024/01/16	11:45:30	54.7
277	2024/01/16	11:45:33	55.0
278	2024/01/16	11:45:36	54.8
279	2024/01/16	11:45:39	54.9
280	2024/01/16	11:45:42	54.8

281	2024/01/16	11:45:45	54.7
282	2024/01/16	11:45:48	54.9
283	2024/01/16	11:45:51	54.9
284	2024/01/16	11:45:54	54.7
285	2024/01/16	11:45:57	54.6
286	2024/01/16	11:46:00	54.6
287	2024/01/16	11:46:03	54.7
288	2024/01/16	11:46:06	54.8
289	2024/01/16	11:46:09	54.9
290	2024/01/16	11:46:12	54.9
291	2024/01/16	11:46:15	54.9
292	2024/01/16	11:46:18	54.9
293	2024/01/16	11:46:21	54.9
294	2024/01/16	11:46:24	54.7
295	2024/01/16	11:46:27	54.7
296	2024/01/16	11:46:30	54.6
297	2024/01/16	11:46:33	54.9
298	2024/01/16	11:46:36	54.7
299	2024/01/16	11:46:39	54.7
300	2024/01/16	11:46:42	54.8

NM4

- Freq Weight : A
- Time Weight : SLOW
- Level Range : 40-100
- Max dB : 71.8 - 2024/01/16 11:57:21
- Level Range : 40-100
- SEL : 85.5
- Leq : 56.0
-

No.s	Date Time	(dB)
1	2024/01/16 11:54:21	59.2
2	2024/01/16 11:54:24	58.4
3	2024/01/16 11:54:27	58.6
4	2024/01/16 11:54:30	55.8
5	2024/01/16 11:54:33	54.0
6	2024/01/16 11:54:36	53.2
7	2024/01/16 11:54:39	53.3
8	2024/01/16 11:54:42	54.2
9	2024/01/16 11:54:45	54.3
10	2024/01/16 11:54:48	60.4
11	2024/01/16 11:54:51	57.0
12	2024/01/16 11:54:54	54.0
13	2024/01/16 11:54:57	53.5
14	2024/01/16 11:55:00	53.4
15	2024/01/16 11:55:03	53.5
16	2024/01/16 11:55:06	53.7
17	2024/01/16 11:55:09	53.4
18	2024/01/16 11:55:12	53.2
19	2024/01/16 11:55:15	53.3
20	2024/01/16 11:55:18	53.2
21	2024/01/16 11:55:21	53.1
22	2024/01/16 11:55:24	53.2
23	2024/01/16 11:55:27	53.2
24	2024/01/16 11:55:30	54.0
25	2024/01/16 11:55:33	52.9
26	2024/01/16 11:55:36	52.7
27	2024/01/16 11:55:39	52.6
28	2024/01/16 11:55:42	52.5
29	2024/01/16 11:55:45	53.6
30	2024/01/16 11:55:48	54.3
31	2024/01/16 11:55:51	56.0
32	2024/01/16 11:55:54	53.5
33	2024/01/16 11:55:57	53.1
34	2024/01/16 11:56:00	53.1
35	2024/01/16 11:56:03	53.0
36	2024/01/16 11:56:06	53.0
37	2024/01/16 11:56:09	52.8
38	2024/01/16 11:56:12	52.9
39	2024/01/16 11:56:15	53.0
40	2024/01/16 11:56:18	52.8
41	2024/01/16 11:56:21	53.2
42	2024/01/16 11:56:24	53.2
43	2024/01/16 11:56:27	53.3
44	2024/01/16 11:56:30	53.5
45	2024/01/16 11:56:33	54.1
46	2024/01/16 11:56:36	53.2
47	2024/01/16 11:56:39	53.2
48	2024/01/16 11:56:42	53.2
49	2024/01/16 11:56:45	53.3
50	2024/01/16 11:56:48	53.3
51	2024/01/16 11:56:51	53.2
52	2024/01/16 11:56:54	53.2
53	2024/01/16 11:56:57	53.3
54	2024/01/16 11:57:00	53.6
55	2024/01/16 11:57:03	54.0
56	2024/01/16 11:57:06	54.0
57	2024/01/16 11:57:09	56.6
58	2024/01/16 11:57:12	60.4
59	2024/01/16 11:57:15	59.0
60	2024/01/16 11:57:18	71.7
61	2024/01/16 11:57:21	62.3
62	2024/01/16 11:57:24	55.8
63	2024/01/16 11:57:27	54.1
64	2024/01/16 11:57:30	56.5
65	2024/01/16 11:57:33	59.1
66	2024/01/16 11:57:36	68.9
67	2024/01/16 11:57:39	62.2
68	2024/01/16 11:57:42	58.4
69	2024/01/16 11:57:45	54.8
70	2024/01/16 11:57:48	54.7
71	2024/01/16 11:57:51	55.2
72	2024/01/16 11:57:54	54.9
73	2024/01/16 11:57:57	54.2
74	2024/01/16 11:58:00	53.3
75	2024/01/16 11:58:03	53.2
76	2024/01/16 11:58:06	53.2
77	2024/01/16 11:58:09	53.3
78	2024/01/16 11:58:12	53.2
79	2024/01/16 11:58:15	53.2
80	2024/01/16 11:58:18	53.2
81	2024/01/16 11:58:21	53.2
82	2024/01/16 11:58:24	53.2
83	2024/01/16 11:58:27	53.3
84	2024/01/16 11:58:30	53.3

85	2024/01/16	11:58:33	53.6
86	2024/01/16	11:58:36	53.2
87	2024/01/16	11:58:39	53.3
88	2024/01/16	11:58:42	53.5
89	2024/01/16	11:58:45	53.5
90	2024/01/16	11:58:48	53.4
91	2024/01/16	11:58:51	53.2
92	2024/01/16	11:58:54	53.1
93	2024/01/16	11:58:57	53.2
94	2024/01/16	11:59:00	53.0
95	2024/01/16	11:59:03	53.0
96	2024/01/16	11:59:06	53.1
97	2024/01/16	11:59:09	53.7
98	2024/01/16	11:59:12	53.3
99	2024/01/16	11:59:15	53.6
100	2024/01/16	11:59:18	57.5
101	2024/01/16	11:59:21	58.9
102	2024/01/16	11:59:24	54.5
103	2024/01/16	11:59:27	53.9
104	2024/01/16	11:59:30	53.7
105	2024/01/16	11:59:33	53.5
106	2024/01/16	11:59:36	53.3
107	2024/01/16	11:59:39	53.2
108	2024/01/16	11:59:42	53.2
109	2024/01/16	11:59:45	53.3
110	2024/01/16	11:59:48	53.3
111	2024/01/16	11:59:51	53.2
112	2024/01/16	11:59:54	55.9
113	2024/01/16	11:59:57	53.8
114	2024/01/16	12:00:00	53.1
115	2024/01/16	12:00:03	53.1
116	2024/01/16	12:00:06	53.1
117	2024/01/16	12:00:09	53.1
118	2024/01/16	12:00:12	53.1
119	2024/01/16	12:00:15	53.1
120	2024/01/16	12:00:18	53.2
121	2024/01/16	12:00:21	53.3
122	2024/01/16	12:00:24	53.3
123	2024/01/16	12:00:27	53.5
124	2024/01/16	12:00:30	53.0
125	2024/01/16	12:00:33	53.2
126	2024/01/16	12:00:36	53.0
127	2024/01/16	12:00:39	53.3
128	2024/01/16	12:00:42	53.3
129	2024/01/16	12:00:45	53.4
130	2024/01/16	12:00:48	53.4
131	2024/01/16	12:00:51	53.2
132	2024/01/16	12:00:54	53.2
133	2024/01/16	12:00:57	53.4
134	2024/01/16	12:01:00	53.1
135	2024/01/16	12:01:03	53.2
136	2024/01/16	12:01:06	53.2
137	2024/01/16	12:01:09	53.3
138	2024/01/16	12:01:12	53.3
139	2024/01/16	12:01:15	53.3
140	2024/01/16	12:01:18	53.3
141	2024/01/16	12:01:21	53.1
142	2024/01/16	12:01:24	53.1
143	2024/01/16	12:01:27	53.1
144	2024/01/16	12:01:30	53.0
145	2024/01/16	12:01:33	53.9
146	2024/01/16	12:01:36	56.4
147	2024/01/16	12:01:39	54.6
148	2024/01/16	12:01:42	53.3
149	2024/01/16	12:01:45	53.3
150	2024/01/16	12:01:48	53.2
151	2024/01/16	12:01:51	53.1
152	2024/01/16	12:01:54	53.1
153	2024/01/16	12:01:57	53.2
154	2024/01/16	12:02:00	53.0
155	2024/01/16	12:02:03	53.0
156	2024/01/16	12:02:06	53.0
157	2024/01/16	12:02:09	53.0
158	2024/01/16	12:02:12	53.0
159	2024/01/16	12:02:15	53.1
160	2024/01/16	12:02:18	53.1
161	2024/01/16	12:02:21	53.4
162	2024/01/16	12:02:24	53.4
163	2024/01/16	12:02:27	53.6
164	2024/01/16	12:02:30	53.9
165	2024/01/16	12:02:33	53.9
166	2024/01/16	12:02:36	53.5
167	2024/01/16	12:02:39	53.6
168	2024/01/16	12:02:42	53.8
169	2024/01/16	12:02:45	53.8
170	2024/01/16	12:02:48	53.7
171	2024/01/16	12:02:51	53.6
172	2024/01/16	12:02:54	53.7
173	2024/01/16	12:02:57	53.6
174	2024/01/16	12:03:00	53.5
175	2024/01/16	12:03:03	54.0
176	2024/01/16	12:03:06	53.7
177	2024/01/16	12:03:09	54.8
178	2024/01/16	12:03:12	58.8
179	2024/01/16	12:03:15	59.8
180	2024/01/16	12:03:18	61.8
181	2024/01/16	12:03:21	63.2
182	2024/01/16	12:03:24	66.2

183	2024/01/16	12:03:27	63.5
184	2024/01/16	12:03:30	61.0
185	2024/01/16	12:03:33	58.2
186	2024/01/16	12:03:36	56.8
187	2024/01/16	12:03:39	54.6
188	2024/01/16	12:03:42	54.7
189	2024/01/16	12:03:45	56.0
190	2024/01/16	12:03:48	54.2
191	2024/01/16	12:03:51	54.0
192	2024/01/16	12:03:54	56.3
193	2024/01/16	12:03:57	58.5
194	2024/01/16	12:04:00	54.4
195	2024/01/16	12:04:03	53.6
196	2024/01/16	12:04:06	53.6
197	2024/01/16	12:04:09	53.6
198	2024/01/16	12:04:12	53.4
199	2024/01/16	12:04:15	53.4
200	2024/01/16	12:04:18	53.4
201	2024/01/16	12:04:21	52.9
202	2024/01/16	12:04:24	53.1
203	2024/01/16	12:04:27	53.1
204	2024/01/16	12:04:30	52.8
205	2024/01/16	12:04:33	52.5
206	2024/01/16	12:04:36	52.5
207	2024/01/16	12:04:39	52.9
208	2024/01/16	12:04:42	52.9
209	2024/01/16	12:04:45	52.9
210	2024/01/16	12:04:48	53.3
211	2024/01/16	12:04:51	54.5
212	2024/01/16	12:04:54	53.1
213	2024/01/16	12:04:57	53.1
214	2024/01/16	12:05:00	52.9
215	2024/01/16	12:05:03	52.8
216	2024/01/16	12:05:06	52.8
217	2024/01/16	12:05:09	53.0
218	2024/01/16	12:05:12	52.9
219	2024/01/16	12:05:15	53.2
220	2024/01/16	12:05:18	53.2
221	2024/01/16	12:05:21	52.8
222	2024/01/16	12:05:24	52.7
223	2024/01/16	12:05:27	52.8
224	2024/01/16	12:05:30	52.6
225	2024/01/16	12:05:33	52.3
226	2024/01/16	12:05:36	52.3
227	2024/01/16	12:05:39	52.6
228	2024/01/16	12:05:42	53.2
229	2024/01/16	12:05:45	59.7
230	2024/01/16	12:05:48	56.1
231	2024/01/16	12:05:51	53.4
232	2024/01/16	12:05:54	53.0
233	2024/01/16	12:05:57	54.7
234	2024/01/16	12:06:00	54.4
235	2024/01/16	12:06:03	53.0
236	2024/01/16	12:06:06	52.9
237	2024/01/16	12:06:09	53.3
238	2024/01/16	12:06:12	55.0
239	2024/01/16	12:06:15	62.7
240	2024/01/16	12:06:18	55.6
241	2024/01/16	12:06:21	55.6
242	2024/01/16	12:06:24	66.6
243	2024/01/16	12:06:27	64.2
244	2024/01/16	12:06:30	60.7
245	2024/01/16	12:06:33	54.8
246	2024/01/16	12:06:36	53.2
247	2024/01/16	12:06:39	53.1
248	2024/01/16	12:06:42	52.9
249	2024/01/16	12:06:45	52.9
250	2024/01/16	12:06:48	53.1
251	2024/01/16	12:06:51	52.9
252	2024/01/16	12:06:54	52.8
253	2024/01/16	12:06:57	52.8
254	2024/01/16	12:07:00	52.8
255	2024/01/16	12:07:03	52.8
256	2024/01/16	12:07:06	52.8
257	2024/01/16	12:07:09	52.9
258	2024/01/16	12:07:12	53.7
259	2024/01/16	12:07:15	53.5
260	2024/01/16	12:07:18	53.1
261	2024/01/16	12:07:21	52.9
262	2024/01/16	12:07:24	52.8
263	2024/01/16	12:07:27	52.9
264	2024/01/16	12:07:30	52.6
265	2024/01/16	12:07:33	52.5
266	2024/01/16	12:07:36	52.4
267	2024/01/16	12:07:39	52.8
268	2024/01/16	12:07:42	53.5
269	2024/01/16	12:07:45	54.5
270	2024/01/16	12:07:48	62.6
271	2024/01/16	12:07:51	58.4
272	2024/01/16	12:07:54	54.3
273	2024/01/16	12:07:57	54.0
274	2024/01/16	12:08:00	53.7
275	2024/01/16	12:08:03	53.8
276	2024/01/16	12:08:06	53.5
277	2024/01/16	12:08:09	53.2
278	2024/01/16	12:08:12	53.1
279	2024/01/16	12:08:15	53.4
280	2024/01/16	12:08:18	53.2

281	2024/01/16	12:08:21	52.9
282	2024/01/16	12:08:24	52.8
283	2024/01/16	12:08:27	53.0
284	2024/01/16	12:08:30	52.8
285	2024/01/16	12:08:33	52.6
286	2024/01/16	12:08:36	52.5
287	2024/01/16	12:08:39	52.7
288	2024/01/16	12:08:42	52.8
289	2024/01/16	12:08:45	55.8
290	2024/01/16	12:08:48	56.7
291	2024/01/16	12:08:51	54.3
292	2024/01/16	12:08:54	53.2
293	2024/01/16	12:08:57	53.0
294	2024/01/16	12:09:00	53.2
295	2024/01/16	12:09:03	54.4
296	2024/01/16	12:09:06	55.8
297	2024/01/16	12:09:09	57.0
298	2024/01/16	12:09:12	56.9
299	2024/01/16	12:09:15	56.9
300	2024/01/16	12:09:18	57.9

-
-
-
-
-
-
-

NM5

Freq Weight : A
Time Weight : SLOW
Level Range : 40-100
Max dB : 83.0 - 2024/01/16 13:06:41
Level Range : 40-100
SEL : 92.0
Leq : 62.5

No.s	Date Time	(dB)
1	2024/01/16 12:59:34	60.4
2	2024/01/16 12:59:37	60.1
3	2024/01/16 12:59:40	60.0
4	2024/01/16 12:59:43	58.9
5	2024/01/16 12:59:46	57.1
6	2024/01/16 12:59:49	56.9
7	2024/01/16 12:59:52	56.9
8	2024/01/16 12:59:55	56.9
9	2024/01/16 12:59:58	57.0
10	2024/01/16 13:00:01	57.1
11	2024/01/16 13:00:04	57.1
12	2024/01/16 13:00:07	59.0
13	2024/01/16 13:00:10	61.2
14	2024/01/16 13:00:13	60.3
15	2024/01/16 13:00:16	63.3
16	2024/01/16 13:00:19	60.6
17	2024/01/16 13:00:22	57.5
18	2024/01/16 13:00:25	56.8
19	2024/01/16 13:00:28	56.7
20	2024/01/16 13:00:31	56.7
21	2024/01/16 13:00:34	56.6
22	2024/01/16 13:00:37	56.6
23	2024/01/16 13:00:40	56.9
24	2024/01/16 13:00:43	58.2
25	2024/01/16 13:00:46	61.0
26	2024/01/16 13:00:49	57.6
27	2024/01/16 13:00:52	57.7
28	2024/01/16 13:00:55	62.3
29	2024/01/16 13:00:58	60.2
30	2024/01/16 13:01:01	57.0
31	2024/01/16 13:01:04	56.6
32	2024/01/16 13:01:07	56.3
33	2024/01/16 13:01:10	56.6
34	2024/01/16 13:01:13	56.6
35	2024/01/16 13:01:16	56.2
36	2024/01/16 13:01:19	56.7
37	2024/01/16 13:01:22	56.9
38	2024/01/16 13:01:25	57.6
39	2024/01/16 13:01:28	56.6
40	2024/01/16 13:01:31	56.8
41	2024/01/16 13:01:34	56.8
42	2024/01/16 13:01:37	56.8
43	2024/01/16 13:01:40	57.0
44	2024/01/16 13:01:43	57.1
45	2024/01/16 13:01:46	59.5
46	2024/01/16 13:01:49	58.8
47	2024/01/16 13:01:52	57.2
48	2024/01/16 13:01:55	56.8
49	2024/01/16 13:01:58	57.0
50	2024/01/16 13:02:01	57.0
51	2024/01/16 13:02:04	56.7
52	2024/01/16 13:02:07	56.7
53	2024/01/16 13:02:10	56.8
54	2024/01/16 13:02:13	56.9
55	2024/01/16 13:02:16	57.0
56	2024/01/16 13:02:19	57.0
57	2024/01/16 13:02:22	56.8
58	2024/01/16 13:02:25	56.8
59	2024/01/16 13:02:28	56.8
60	2024/01/16 13:02:31	56.8
61	2024/01/16 13:02:34	57.1
62	2024/01/16 13:02:37	56.7
63	2024/01/16 13:02:40	56.8
64	2024/01/16 13:02:43	56.6
65	2024/01/16 13:02:46	56.5
66	2024/01/16 13:02:49	56.3
67	2024/01/16 13:02:52	56.5
68	2024/01/16 13:02:55	56.6
69	2024/01/16 13:02:58	56.7
70	2024/01/16 13:03:01	56.7
71	2024/01/16 13:03:04	56.5
72	2024/01/16 13:03:07	56.5
73	2024/01/16 13:03:10	56.6
74	2024/01/16 13:03:13	56.6
75	2024/01/16 13:03:16	56.5
76	2024/01/16 13:03:19	56.5
77	2024/01/16 13:03:22	56.6
78	2024/01/16 13:03:25	56.6
79	2024/01/16 13:03:28	56.5
80	2024/01/16 13:03:31	56.6
81	2024/01/16 13:03:34	56.6
82	2024/01/16 13:03:37	56.6
83	2024/01/16 13:03:40	56.6
84	2024/01/16 13:03:43	56.4

85	2024/01/16	13:03:46	56.4
86	2024/01/16	13:03:49	56.5
87	2024/01/16	13:03:52	57.0
88	2024/01/16	13:03:55	63.7
89	2024/01/16	13:03:58	59.6
90	2024/01/16	13:04:01	57.4
91	2024/01/16	13:04:04	56.8
92	2024/01/16	13:04:07	56.8
93	2024/01/16	13:04:10	56.9
94	2024/01/16	13:04:13	56.8
95	2024/01/16	13:04:16	56.8
96	2024/01/16	13:04:19	56.8
97	2024/01/16	13:04:22	56.9
98	2024/01/16	13:04:25	56.9
99	2024/01/16	13:04:28	57.0
100	2024/01/16	13:04:31	56.9
101	2024/01/16	13:04:34	56.9
102	2024/01/16	13:04:37	56.9
103	2024/01/16	13:04:40	56.9
104	2024/01/16	13:04:43	56.7
105	2024/01/16	13:04:46	56.7
106	2024/01/16	13:04:49	56.6
107	2024/01/16	13:04:52	56.7
108	2024/01/16	13:04:55	56.7
109	2024/01/16	13:04:58	56.7
110	2024/01/16	13:05:01	56.7
111	2024/01/16	13:05:04	56.7
112	2024/01/16	13:05:07	56.7
113	2024/01/16	13:05:10	56.7
114	2024/01/16	13:05:13	56.6
115	2024/01/16	13:05:16	56.7
116	2024/01/16	13:05:19	56.7
117	2024/01/16	13:05:22	56.7
118	2024/01/16	13:05:25	57.0
119	2024/01/16	13:05:28	57.0
120	2024/01/16	13:05:31	57.6
121	2024/01/16	13:05:34	58.7
122	2024/01/16	13:05:37	61.0
123	2024/01/16	13:05:40	66.1
124	2024/01/16	13:05:43	59.3
125	2024/01/16	13:05:46	57.4
126	2024/01/16	13:05:49	58.1
127	2024/01/16	13:05:52	59.8
128	2024/01/16	13:05:55	57.9
129	2024/01/16	13:05:58	58.3
130	2024/01/16	13:06:01	58.3
131	2024/01/16	13:06:04	72.1
132	2024/01/16	13:06:07	68.2
133	2024/01/16	13:06:10	62.8
134	2024/01/16	13:06:13	59.5
135	2024/01/16	13:06:16	60.5
136	2024/01/16	13:06:19	66.5
137	2024/01/16	13:06:22	77.9
138	2024/01/16	13:06:25	77.8
139	2024/01/16	13:06:28	78.5
140	2024/01/16	13:06:31	70.1
141	2024/01/16	13:06:34	70.6
142	2024/01/16	13:06:37	74.8
143	2024/01/16	13:06:40	79.3
144	2024/01/16	13:06:43	69.8
145	2024/01/16	13:06:46	61.2
146	2024/01/16	13:06:49	58.3
147	2024/01/16	13:06:52	57.1
148	2024/01/16	13:06:55	56.8
149	2024/01/16	13:06:58	56.9
150	2024/01/16	13:07:01	56.8
151	2024/01/16	13:07:04	56.7
152	2024/01/16	13:07:07	56.5
153	2024/01/16	13:07:10	56.8
154	2024/01/16	13:07:13	57.9
155	2024/01/16	13:07:16	60.0
156	2024/01/16	13:07:19	57.0
157	2024/01/16	13:07:22	56.4
158	2024/01/16	13:07:25	56.3
159	2024/01/16	13:07:28	56.3
160	2024/01/16	13:07:31	56.4
161	2024/01/16	13:07:34	56.4
162	2024/01/16	13:07:37	56.6
163	2024/01/16	13:07:40	56.6
164	2024/01/16	13:07:43	56.2
165	2024/01/16	13:07:46	56.3
166	2024/01/16	13:07:49	56.2
167	2024/01/16	13:07:52	56.4
168	2024/01/16	13:07:55	57.2
169	2024/01/16	13:07:58	57.2
170	2024/01/16	13:08:01	56.9
171	2024/01/16	13:08:04	56.9
172	2024/01/16	13:08:07	56.7
173	2024/01/16	13:08:10	56.8
174	2024/01/16	13:08:13	56.8
175	2024/01/16	13:08:16	57.1
176	2024/01/16	13:08:19	58.2
177	2024/01/16	13:08:22	64.4
178	2024/01/16	13:08:25	60.2
179	2024/01/16	13:08:28	57.4
180	2024/01/16	13:08:31	56.8
181	2024/01/16	13:08:34	56.8
182	2024/01/16	13:08:37	57.3

183	2024/01/16	13:08:40	67.6
184	2024/01/16	13:08:43	61.5
185	2024/01/16	13:08:46	57.4
186	2024/01/16	13:08:49	56.8
187	2024/01/16	13:08:52	56.9
188	2024/01/16	13:08:55	57.0
189	2024/01/16	13:08:58	56.9
190	2024/01/16	13:09:01	56.9
191	2024/01/16	13:09:04	57.1
192	2024/01/16	13:09:07	58.8
193	2024/01/16	13:09:10	61.9
194	2024/01/16	13:09:13	58.6
195	2024/01/16	13:09:16	57.1
196	2024/01/16	13:09:19	56.8
197	2024/01/16	13:09:22	56.9
198	2024/01/16	13:09:25	56.8
199	2024/01/16	13:09:28	56.8
200	2024/01/16	13:09:31	56.7
201	2024/01/16	13:09:34	56.7
202	2024/01/16	13:09:37	56.7
203	2024/01/16	13:09:40	56.7
204	2024/01/16	13:09:43	56.6
205	2024/01/16	13:09:46	56.7
206	2024/01/16	13:09:49	56.5
207	2024/01/16	13:09:52	56.9
208	2024/01/16	13:09:55	57.3
209	2024/01/16	13:09:58	56.6
210	2024/01/16	13:10:01	56.6
211	2024/01/16	13:10:04	56.7
212	2024/01/16	13:10:07	56.7
213	2024/01/16	13:10:10	56.7
214	2024/01/16	13:10:13	56.5
215	2024/01/16	13:10:16	55.9
216	2024/01/16	13:10:19	56.2
217	2024/01/16	13:10:22	56.2
218	2024/01/16	13:10:25	58.0
219	2024/01/16	13:10:28	57.9
220	2024/01/16	13:10:31	57.6
221	2024/01/16	13:10:34	56.5
222	2024/01/16	13:10:37	56.5
223	2024/01/16	13:10:40	56.7
224	2024/01/16	13:10:43	56.4
225	2024/01/16	13:10:46	56.4
226	2024/01/16	13:10:49	56.0
227	2024/01/16	13:10:52	55.8
228	2024/01/16	13:10:55	56.3
229	2024/01/16	13:10:58	56.6
230	2024/01/16	13:11:01	56.5
231	2024/01/16	13:11:04	55.6
232	2024/01/16	13:11:07	56.0
233	2024/01/16	13:11:10	56.1
234	2024/01/16	13:11:13	57.6
235	2024/01/16	13:11:16	58.6
236	2024/01/16	13:11:19	56.7
237	2024/01/16	13:11:22	56.7
238	2024/01/16	13:11:25	56.5
239	2024/01/16	13:11:28	56.5
240	2024/01/16	13:11:31	56.5
241	2024/01/16	13:11:34	56.7
242	2024/01/16	13:11:37	56.6
243	2024/01/16	13:11:40	56.7
244	2024/01/16	13:11:43	56.4
245	2024/01/16	13:11:46	56.5
246	2024/01/16	13:11:49	56.6
247	2024/01/16	13:11:52	56.7
248	2024/01/16	13:11:55	56.6
249	2024/01/16	13:11:58	56.7
250	2024/01/16	13:12:01	56.7
251	2024/01/16	13:12:04	57.2
252	2024/01/16	13:12:07	60.3
253	2024/01/16	13:12:10	57.6
254	2024/01/16	13:12:13	56.7
255	2024/01/16	13:12:16	56.6
256	2024/01/16	13:12:19	56.6
257	2024/01/16	13:12:22	56.6
258	2024/01/16	13:12:25	56.7
259	2024/01/16	13:12:28	56.6
260	2024/01/16	13:12:31	56.8
261	2024/01/16	13:12:34	56.8
262	2024/01/16	13:12:37	56.9
263	2024/01/16	13:12:40	56.8
264	2024/01/16	13:12:43	56.8
265	2024/01/16	13:12:46	57.0
266	2024/01/16	13:12:49	56.9
267	2024/01/16	13:12:52	56.7
268	2024/01/16	13:12:55	57.1
269	2024/01/16	13:12:58	67.1
270	2024/01/16	13:13:01	60.2
271	2024/01/16	13:13:04	57.0
272	2024/01/16	13:13:07	56.6
273	2024/01/16	13:13:10	56.6
274	2024/01/16	13:13:13	56.6
275	2024/01/16	13:13:16	56.6
276	2024/01/16	13:13:19	56.6
277	2024/01/16	13:13:22	56.6
278	2024/01/16	13:13:25	56.6
279	2024/01/16	13:13:28	56.6
280	2024/01/16	13:13:31	56.7

281	2024/01/16	13:13:34	56.6
282	2024/01/16	13:13:37	56.6
283	2024/01/16	13:13:40	56.7
284	2024/01/16	13:13:43	56.5
285	2024/01/16	13:13:46	56.5
286	2024/01/16	13:13:49	56.4
287	2024/01/16	13:13:52	56.6
288	2024/01/16	13:13:55	56.6
289	2024/01/16	13:13:58	56.6
290	2024/01/16	13:14:01	56.7
291	2024/01/16	13:14:04	56.3
292	2024/01/16	13:14:07	57.4
293	2024/01/16	13:14:10	56.5
294	2024/01/16	13:14:13	56.7
295	2024/01/16	13:14:16	58.3
296	2024/01/16	13:14:19	58.9
297	2024/01/16	13:14:22	59.8
298	2024/01/16	13:14:25	60.0
299	2024/01/16	13:14:28	59.4
300	2024/01/16	13:14:31	58.2

-
-
-
-
-
-
-

Freq Weight : A
Time Weight : SLOW
Level Range : 40-100
Max dB : 71.3 - 2024/01/16 12:37:39
Level Range : 40-100
SEL : 91.3
Leq : 61.8

NM6

No.s	Date Time	(dB)
1	2024/01/16 12:37:39	69.3
2	2024/01/16 12:37:42	67.9
3	2024/01/16 12:37:45	67.6
4	2024/01/16 12:37:48	66.6
5	2024/01/16 12:37:51	62.5
6	2024/01/16 12:37:54	61.5
7	2024/01/16 12:37:57	61.5
8	2024/01/16 12:38:00	60.9
9	2024/01/16 12:38:03	60.9
10	2024/01/16 12:38:06	61.2
11	2024/01/16 12:38:09	61.3
12	2024/01/16 12:38:12	61.3
13	2024/01/16 12:38:15	61.4
14	2024/01/16 12:38:18	61.3
15	2024/01/16 12:38:21	59.4
16	2024/01/16 12:38:24	60.2
17	2024/01/16 12:38:27	61.4
18	2024/01/16 12:38:30	61.5
19	2024/01/16 12:38:33	61.6
20	2024/01/16 12:38:36	61.6
21	2024/01/16 12:38:39	61.6
22	2024/01/16 12:38:42	61.6
23	2024/01/16 12:38:45	61.6
24	2024/01/16 12:38:48	61.5
25	2024/01/16 12:38:51	61.5
26	2024/01/16 12:38:54	61.5
27	2024/01/16 12:38:57	61.5
28	2024/01/16 12:39:00	61.5
29	2024/01/16 12:39:03	61.5
30	2024/01/16 12:39:06	61.5
31	2024/01/16 12:39:09	61.5
32	2024/01/16 12:39:12	61.5
33	2024/01/16 12:39:15	61.5
34	2024/01/16 12:39:18	61.5
35	2024/01/16 12:39:21	61.5
36	2024/01/16 12:39:24	61.5
37	2024/01/16 12:39:27	61.5
38	2024/01/16 12:39:30	61.5
39	2024/01/16 12:39:33	61.5
40	2024/01/16 12:39:36	61.5
41	2024/01/16 12:39:39	61.6
42	2024/01/16 12:39:42	61.6
43	2024/01/16 12:39:45	61.6
44	2024/01/16 12:39:48	61.5
45	2024/01/16 12:39:51	61.5
46	2024/01/16 12:39:54	61.5
47	2024/01/16 12:39:57	61.6
48	2024/01/16 12:40:00	61.6
49	2024/01/16 12:40:03	61.6
50	2024/01/16 12:40:06	61.6
51	2024/01/16 12:40:09	61.6
52	2024/01/16 12:40:12	61.6
53	2024/01/16 12:40:15	61.6
54	2024/01/16 12:40:18	61.5
55	2024/01/16 12:40:21	61.6
56	2024/01/16 12:40:24	61.6
57	2024/01/16 12:40:27	61.6
58	2024/01/16 12:40:30	61.6
59	2024/01/16 12:40:33	61.6
60	2024/01/16 12:40:36	61.6
61	2024/01/16 12:40:39	61.6
62	2024/01/16 12:40:42	61.6
63	2024/01/16 12:40:45	61.6
64	2024/01/16 12:40:48	61.5
65	2024/01/16 12:40:51	61.5
66	2024/01/16 12:40:54	61.5
67	2024/01/16 12:40:57	61.6
68	2024/01/16 12:41:00	61.6
69	2024/01/16 12:41:03	61.6
70	2024/01/16 12:41:06	61.6
71	2024/01/16 12:41:09	61.6
72	2024/01/16 12:41:12	61.6
73	2024/01/16 12:41:15	61.6
74	2024/01/16 12:41:18	61.6
75	2024/01/16 12:41:21	61.6
76	2024/01/16 12:41:24	61.6
77	2024/01/16 12:41:27	61.6
78	2024/01/16 12:41:30	61.6
79	2024/01/16 12:41:33	61.6
80	2024/01/16 12:41:36	61.6
81	2024/01/16 12:41:39	61.6
82	2024/01/16 12:41:42	61.6
83	2024/01/16 12:41:45	61.6
84	2024/01/16 12:41:48	61.5

85	2024/01/16 12:41:51	61.6
86	2024/01/16 12:41:54	61.6
87	2024/01/16 12:41:57	61.6
88	2024/01/16 12:42:00	61.6
89	2024/01/16 12:42:03	61.6
90	2024/01/16 12:42:06	61.6
91	2024/01/16 12:42:09	61.6
92	2024/01/16 12:42:12	61.6
93	2024/01/16 12:42:15	61.6
94	2024/01/16 12:42:18	61.5
95	2024/01/16 12:42:21	61.6
96	2024/01/16 12:42:24	61.6
97	2024/01/16 12:42:27	61.6
98	2024/01/16 12:42:30	61.6
99	2024/01/16 12:42:33	61.6
100	2024/01/16 12:42:36	61.6
101	2024/01/16 12:42:39	61.6
102	2024/01/16 12:42:42	61.6
103	2024/01/16 12:42:45	61.6
104	2024/01/16 12:42:48	61.5
105	2024/01/16 12:42:51	61.5
106	2024/01/16 12:42:54	61.5
107	2024/01/16 12:42:57	61.6
108	2024/01/16 12:43:00	61.6
109	2024/01/16 12:43:03	61.6
110	2024/01/16 12:43:06	61.6
111	2024/01/16 12:43:09	61.6
112	2024/01/16 12:43:12	61.6
113	2024/01/16 12:43:15	61.6
114	2024/01/16 12:43:18	61.5
115	2024/01/16 12:43:21	61.6
116	2024/01/16 12:43:24	61.6
117	2024/01/16 12:43:27	61.6
118	2024/01/16 12:43:30	61.6
119	2024/01/16 12:43:33	61.6
120	2024/01/16 12:43:36	61.6
121	2024/01/16 12:43:39	61.6
122	2024/01/16 12:43:42	61.6
123	2024/01/16 12:43:45	61.7
124	2024/01/16 12:43:48	61.6
125	2024/01/16 12:43:51	61.6
126	2024/01/16 12:43:54	61.6
127	2024/01/16 12:43:57	61.6
128	2024/01/16 12:44:00	61.6
129	2024/01/16 12:44:03	61.6
130	2024/01/16 12:44:06	61.7
131	2024/01/16 12:44:09	61.6
132	2024/01/16 12:44:12	61.6
133	2024/01/16 12:44:15	61.7
134	2024/01/16 12:44:18	61.6
135	2024/01/16 12:44:21	61.6
136	2024/01/16 12:44:24	61.6
137	2024/01/16 12:44:27	61.7
138	2024/01/16 12:44:30	61.7
139	2024/01/16 12:44:33	61.7
140	2024/01/16 12:44:36	61.7
141	2024/01/16 12:44:39	61.7
142	2024/01/16 12:44:42	61.7
143	2024/01/16 12:44:45	61.7
144	2024/01/16 12:44:48	61.6
145	2024/01/16 12:44:51	61.7
146	2024/01/16 12:44:54	61.6
147	2024/01/16 12:44:57	61.6
148	2024/01/16 12:45:00	61.7
149	2024/01/16 12:45:03	61.7
150	2024/01/16 12:45:06	61.7
151	2024/01/16 12:45:09	61.6
152	2024/01/16 12:45:12	62.3
153	2024/01/16 12:45:15	64.5
154	2024/01/16 12:45:18	62.0
155	2024/01/16 12:45:21	66.3
156	2024/01/16 12:45:24	64.8
157	2024/01/16 12:45:27	63.8
158	2024/01/16 12:45:30	61.9
159	2024/01/16 12:45:33	61.8
160	2024/01/16 12:45:36	61.7
161	2024/01/16 12:45:39	61.7
162	2024/01/16 12:45:42	61.8
163	2024/01/16 12:45:45	61.7
164	2024/01/16 12:45:48	61.6
165	2024/01/16 12:45:51	61.6
166	2024/01/16 12:45:54	61.6
167	2024/01/16 12:45:57	61.7
168	2024/01/16 12:46:00	61.7
169	2024/01/16 12:46:03	61.7
170	2024/01/16 12:46:06	61.7
171	2024/01/16 12:46:09	61.7
172	2024/01/16 12:46:12	61.7
173	2024/01/16 12:46:15	61.7
174	2024/01/16 12:46:18	61.7
175	2024/01/16 12:46:21	61.7
176	2024/01/16 12:46:24	61.7
177	2024/01/16 12:46:27	61.7
178	2024/01/16 12:46:30	61.7
179	2024/01/16 12:46:33	61.7
180	2024/01/16 12:46:36	61.8
181	2024/01/16 12:46:39	61.7
182	2024/01/16 12:46:42	61.7

183	2024/01/16	12:46:45	61.7
184	2024/01/16	12:46:48	61.6
185	2024/01/16	12:46:51	61.6
186	2024/01/16	12:46:54	61.6
187	2024/01/16	12:46:57	61.7
188	2024/01/16	12:47:00	61.7
189	2024/01/16	12:47:03	61.7
190	2024/01/16	12:47:06	61.7
191	2024/01/16	12:47:09	61.7
192	2024/01/16	12:47:12	61.7
193	2024/01/16	12:47:15	61.7
194	2024/01/16	12:47:18	61.7
195	2024/01/16	12:47:21	61.6
196	2024/01/16	12:47:24	61.7
197	2024/01/16	12:47:27	61.7
198	2024/01/16	12:47:30	61.7
199	2024/01/16	12:47:33	61.7
200	2024/01/16	12:47:36	61.7
201	2024/01/16	12:47:39	61.6
202	2024/01/16	12:47:42	61.6
203	2024/01/16	12:47:45	61.7
204	2024/01/16	12:47:48	61.6
205	2024/01/16	12:47:51	61.6
206	2024/01/16	12:47:54	61.6
207	2024/01/16	12:47:57	61.6
208	2024/01/16	12:48:00	61.6
209	2024/01/16	12:48:03	61.6
210	2024/01/16	12:48:06	61.6
211	2024/01/16	12:48:09	61.6
212	2024/01/16	12:48:12	61.6
213	2024/01/16	12:48:15	61.6
214	2024/01/16	12:48:18	61.6
215	2024/01/16	12:48:21	61.6
216	2024/01/16	12:48:24	61.6
217	2024/01/16	12:48:27	61.6
218	2024/01/16	12:48:30	61.6
219	2024/01/16	12:48:33	61.6
220	2024/01/16	12:48:36	61.6
221	2024/01/16	12:48:39	61.6
222	2024/01/16	12:48:42	61.6
223	2024/01/16	12:48:45	61.6
224	2024/01/16	12:48:48	61.6
225	2024/01/16	12:48:51	62.0
226	2024/01/16	12:48:54	61.6
227	2024/01/16	12:48:57	61.6
228	2024/01/16	12:49:00	61.6
229	2024/01/16	12:49:03	61.6
230	2024/01/16	12:49:06	61.6
231	2024/01/16	12:49:09	61.6
232	2024/01/16	12:49:12	61.6
233	2024/01/16	12:49:15	61.6
234	2024/01/16	12:49:18	61.5
235	2024/01/16	12:49:21	59.7
236	2024/01/16	12:49:24	60.7
237	2024/01/16	12:49:27	60.7
238	2024/01/16	12:49:30	61.5
239	2024/01/16	12:49:33	61.6
240	2024/01/16	12:49:36	61.6
241	2024/01/16	12:49:39	61.6
242	2024/01/16	12:49:42	61.6
243	2024/01/16	12:49:45	61.6
244	2024/01/16	12:49:48	61.6
245	2024/01/16	12:49:51	61.6
246	2024/01/16	12:49:54	61.7
247	2024/01/16	12:49:57	61.7
248	2024/01/16	12:50:00	61.7
249	2024/01/16	12:50:03	61.6
250	2024/01/16	12:50:06	61.3
251	2024/01/16	12:50:09	60.2
252	2024/01/16	12:50:12	60.8
253	2024/01/16	12:50:15	61.6
254	2024/01/16	12:50:18	61.6
255	2024/01/16	12:50:21	61.6
256	2024/01/16	12:50:24	61.6
257	2024/01/16	12:50:27	61.6
258	2024/01/16	12:50:30	61.6
259	2024/01/16	12:50:33	61.6
260	2024/01/16	12:50:36	61.6
261	2024/01/16	12:50:39	61.6
262	2024/01/16	12:50:42	61.5
263	2024/01/16	12:50:45	61.6
264	2024/01/16	12:50:48	61.5
265	2024/01/16	12:50:51	61.5
266	2024/01/16	12:50:54	61.5
267	2024/01/16	12:50:57	61.5
268	2024/01/16	12:51:00	61.5
269	2024/01/16	12:51:03	61.5
270	2024/01/16	12:51:06	61.5
271	2024/01/16	12:51:09	61.5
272	2024/01/16	12:51:12	61.6
273	2024/01/16	12:51:15	61.6
274	2024/01/16	12:51:18	61.6
275	2024/01/16	12:51:21	61.6
276	2024/01/16	12:51:24	61.6
277	2024/01/16	12:51:27	61.5
278	2024/01/16	12:51:30	61.6
279	2024/01/16	12:51:33	61.6
280	2024/01/16	12:51:36	61.6

281	2024/01/16	12:51:39	61.6
282	2024/01/16	12:51:42	61.6
283	2024/01/16	12:51:45	61.6
284	2024/01/16	12:51:48	61.6
285	2024/01/16	12:51:51	61.6
286	2024/01/16	12:51:54	61.6
287	2024/01/16	12:51:57	61.6
288	2024/01/16	12:52:00	61.6
289	2024/01/16	12:52:03	61.6
290	2024/01/16	12:52:06	61.6
291	2024/01/16	12:52:09	61.6
292	2024/01/16	12:52:12	61.6
293	2024/01/16	12:52:15	61.6
294	2024/01/16	12:52:18	61.6
295	2024/01/16	12:52:21	61.7
296	2024/01/16	12:52:24	61.6
297	2024/01/16	12:52:27	61.6
298	2024/01/16	12:52:30	61.6
299	2024/01/16	12:52:33	61.6
300	2024/01/16	12:52:36	61.6

Appendix B

Generator Specifications

Cat® C7.1 DIESEL GENERATOR SETS

Image shown may not reflect actual configuration

125 ekW – 200 ekW

60 Hz

Standby	Prime
125 ekW	114 ekW
150 ekW	135 ekW
175 ekW	158 ekW
200 ekW	-

BENEFITS & FEATURES

CAT® GENERATOR SET PACKAGE

Cat generator set packages have been fully prototype tested and certified torsional vibration analysis reports are available. The packages are designed to meet the NFPA 110 requirement for loading, conform to the ISO 8528-5 steady state and fill transient response requirements.

CAT DIESEL ENGINES

The four-cycle Cat diesel engine combines consistent performance with excellent fuel economy and transient response that meets or exceeds ISO 8528-5. The engines feature a reliable, rugged, and durable design that has been field proven in thousands of applications worldwide in emergency standby installations.

COOLING SYSTEM

The cooling system has been designed and tested to ensure proper generator set cooling, and includes the radiator, fan, belts, and all guarding installed as standard. Contact your Cat dealer for specific ambient and altitude capabilities.

GENERATORS

The generators used on Cat packages have been designed and tested to work with the Cat engine. The generators are built with robust Class H insulation and provide industry-leading motor starting capability and altitude capabilities.

EMCP CONTROL PANELS

The EMCP controller features the reliability and durability you have to come to expect from your Cat equipment. The EMCP 4 is a scalable control platform designed to ensure reliable generator set operation, providing extensive information about power output and engine operation. EMCP 4 systems can be further customized to meet your needs through programming and expansion modules.

SPECIFICATIONS

ENGINE SPECIFICATIONS

Engine Model	Cat® C7.1 ACERT In-line 6, 4-cycle diesel
Bore x Stroke	105mm x 127mm (4.1in x 5.0 in)
Displacement	7.01 L (428 in³)
Compression Ratio	16.7:1
Aspiration	Turbocharged Air-to-Air-Aftercooled
Fuel Injection System	Electronic, Common Rail
Governor	Electronic ADEM™ A4
Emission Certifications	US EPA TIER III Non-Road

GENERATOR SET SPECIFICATIONS

Alternator Design	Brushless Single Bearing, 4 Pole
Stator	2/3 Pitch
No. of Leads	12
Available Voltage Options	600/480/440/240/220V
Frequency	60Hz
Alternator Voltage	12V
Alternator Insulation & IP	Class H; IP23
Standard Temperature Rise	125/130 Deg C
Available Excitation Options	Self-Excited, AREP
Voltage Regulation, Steady State+/-	≤1%

STANDARD EQUIPMENT

Air inlet system	Aftercooler core Turbocharger
Control panels	EMCP4.2 control panel
Cooling system	Radiator and cooling fan complete with protective guards Standard ambient temperatures up to 50degC (122degF) 50% coolant antifreeze/corrosion inhibitor Coolant Reservoir
Fuel system	Primary & secondary fuel filters Fuel priming pump Flexible fuel lines
Generators and generator attachments	Brushless, self-excited 2/3 pitch, random wound IP23 Protection Insulation Class H and temperature rise Integrated Voltage Regulator
Governing system	Cat Electronic Governor (ADEM A4)
Protection System	Safety Shutoff – Low Oil Pressure Safety Shutoff – Overspeed Coolant Level Sensor
Starting/charging system	12-Volt Electric Starting Motor Batteries with rack & cables
General	Paint – Caterpillar Yellow except rails and radiators gloss black

OPTIONAL EQUIPMENT

Air inlet system	Single Element air filter Cartridge type air filter
Exhaust	Industrial, residential, critical mufflers
Control panels	Remote Annunciators Discrete I/O Module Earth (Ground) Fault Relay
Circuit Breakers	3-Pole 100% Rated – Single & Dual breaker combination
Enclosures	Sound Attenuated (SA) – Level 1 & Level 2 Weather Protective Aluminum Enclosure
Cooling system	Radiator Stone guards
Mufflers	Industrial grade (10 dBA) Residential and Critical grade (25 dBA) & 35 dBA mufflers
Fuel System	Sub Tank Bases: 408, 777 Gal
Generators and generator attachments	Excitation – Self Excitation –PMG Oversize
Starting/charging system	Standard Battery Set
Certifications	UL2200 Listed Certification of Compliance – IBC Seismic
General	Tool Set

WEIGHTS & DIMENSIONS

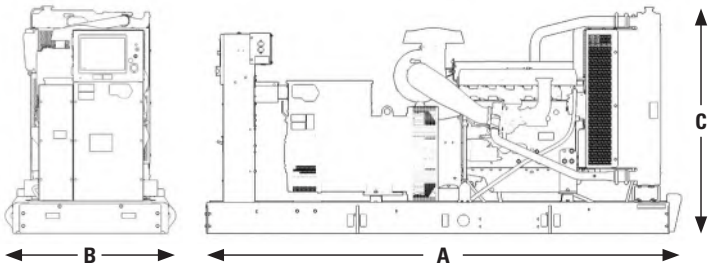

Note: General configuration not to be used for installation. See general dimension drawings for detail.

Standby Ratings	Dim "A" mm (in)	Dim "B" mm (in)	Dim "C" mm (in)	Generator Set Weight kg (lb)
125 ekW	3039 (120)	1110 (44)	1476 (58)	1500 (3307)
150 ekW	3039 (120)	1110 (44)	1476 (58)	1500 (3307)
175 ekW	3039 (120)	1110 (44)	1476 (58)	1500 (3307)
200 ekW	3039 (120)	1110 (44)	1476 (58)	1500 (3307)

Image shown may not reflect actual configuration

Integral and Sub Base Fuel Tanks

Features

- UL Listed for United States (UL 142) and Canada (CAN/ULC S601)
- Facilitate compliance with NFPA 30 code, NFPA 37 and 110 standards and CSA C282 code and B139-09 standard
- Welded, heavy steel gauge construction with a containment basin sized as a minimum 110% of the tank
- Gloss black polyester triglycidyl isocyanurate
- (TGIC) powder coating
- Dedicated external customer interface area with access to the 4" (101.6 mm) fuel fill, visual level gauge, normal and emergency vents
- Rear electrical stub-up area with removable access panel
- Removable engine supply and return dip tubes
- Two additional 1" (25.4 mm) ports for customer use
- Tanks are rated to safely support the weight of the generator
- 8 gal (30.3 L) drip pan for oil and coolant (for generator sets up to 60 ekW only)
- Standard NPT tank fittings
- UL listed emergency vents sized as per UL standards 3" (76.2 mm), 4" (101.6 mm), and 5" (127 mm) NPT
- Normal atmospheric vent 1-1/4" (31.75 mm)
- Top-mounted fuel level sensor with control panel alarms
- Top-mounted leak detection switch
- Lockable fuel fill cap, 4" (101.6 mm) NPT

Description

- Dual wall, secondary containment
- Pressure tested to UL requirements
- Fuel tank mounts directly below generator skid base
- Modular tank design is compatible with all factory units open and enclosed

Options

- Emergency vent and normal vent extension kits 12' (3.66 m)
- 5 gal (18.9 L) spill containment
- Overfill prevention valve
- Tank riser to allow for visual secondary containment leak inspection
- Drop tube

Sub-Base Fuel Tank Capacities with Fuel Tank Dimensions

Engine Model	Tank Feature Code	Generator Set Rating ekW	Est. Run Time hrs	Fillable Capacity		Usable Capacity		Vent	Length 'L'		Width 'W'		Height 'H'		Weight (Dry)	
				L	gal	L	gal	in	mm	in	mm	in	mm	in	kg	lb
C7.1	FSBTI24	125	40	1520	402	1495	395	4	4035	158.9	100	39.4	647	25.5	720	1587
		150	35													
		175	29													
		200	27													
	FSBTJ48	125	78	2940	777	2918	771	5	5035	198.2			933	36.7	1145	2524
		150	68													
		175	57													
		200	52													

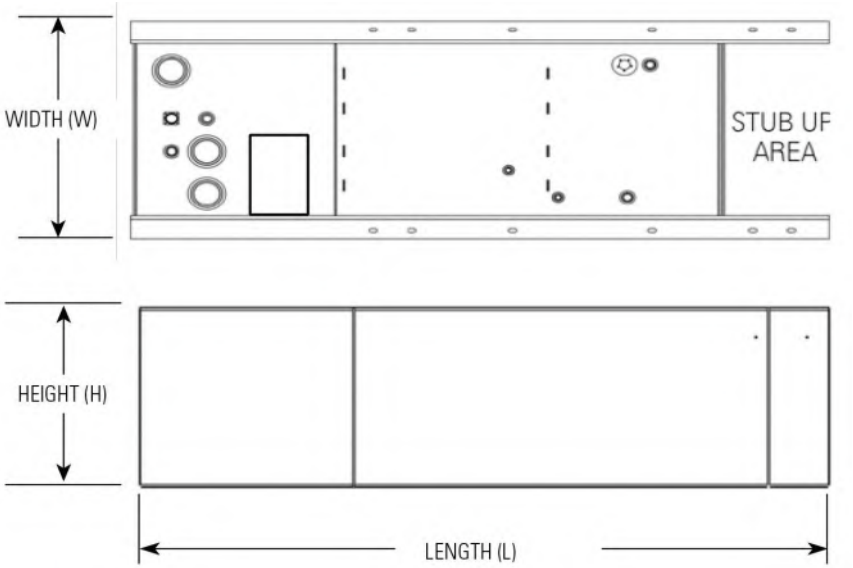

Tanks are UL Listed and constructed in accordance with UL Standard for Safety UL 142, Steel Aboveground Tanks for Flammable and Combustible Liquids and Canada CAN/ULC Fabricated Steel above ground Horizontal Tanks for Flammable and Combustible Liquids

Fuel tanks facilitate compliance with the following United States NFPA Code and Standards:
N FPA 30: Flammable and Combustible Liquids code
NFPA 37: Standard for the Installation and Use of Stationary Combustion Engines and Gas Turbines
NFPA 110: Standard for Emergency and Standby Power Systems

Fuel tanks facilitate compliance with the following Canadian Standard and Code:
CSA C282 – Emergency Electrical Power Supply for Buildings
CSA B139-09 – Installation Code for Oil-Burning Equipment

Image shown may not reflect actual configuration

Weather Protective and Sound Attenuated Enclosures

60Hz

Features

Robust/Highly Corrosion Resistant Construction

- Stainless steel flush fitting latches and hinges tested and proven to withstand extreme conditions of corrosion
- Zinc plated or stainless steel fastener

Excellent Access

- Single side access for service and controls
- All non-service sides have removable doors and/or panels
- Radiator fill access
- Lube oil and coolant drains piped to the exterior of the enclosure base
- Large cable entry area for installation ease
- Double doors on both sides
- Vertically hinged doors with solid bar door stays to hold doors in place when open

Security and Safety

- Lockable access doors which give full access to control panel and breaker
- Cooling fan and battery charging alternator fully guarded
- Fuel fill, oil fill, and battery can only be reached via lockable access
- Stub-up area is rodent proof.

Transportability

- These enclosures are of extremely rugged construction to withstand outdoor exposure and rough handling common on many construction sites. The sound deadening material is of a self-extinguishing design
- This range of enclosures are designed on modular principles with many interchangeable components permitting on site repair

Options

- Weather Protective – constructed with 16 gauge steel; industrial silencer mounted within the main enclosure body.
- Sound Attenuated Level 1 – constructed with 16 gauge steel; weather protective with critical silencer - silencer mounted in separate upward discharging radiator hood.
- Sound Attenuated Level 2 – constructed with 16 gauge steel; weather protective with critical silencer and 100% lined with sound deadening material – silencer mounted in separate upward discharging radiator hood.
- Sound Attenuated Aluminum constructed with 14 gauge Aluminum 5052 grade. Weather protective with critical silencer and 100% lined with sound deadening material – silencer mounted in separate upward discharging radiator hood.
- Caterpillar Yellow* or white paint.
- UL Listed sub base tanks.
- Externally mounted emergency stop button.
- Seismic certification per applicable building codes: IBC 2000, IBC 2003, IBC 2006, IBC 2009, IBC 2012, CBC 2007, CBC 2010.
- IBC certification for 180 mph wind loading

*Not available with Aluminium enclosures

Enclosure Sound Pressure Levels (SPL) at 100%

Weather Protective Enclosure		Cooling Air Flow Rate		SPL @7m (23ft)
Model	**Standby ekW**	**m^3/s**	**cfm**	**dBA**
D125-8	125	4.6	9676	78
D150-10	150	4.6	9676	79
D175-4	175	5.9	12431	84
D200-2	200	5.9	12431	89
SA Level 1 Enclosure				
Model	**Standby ekW**	**m^3/s**	**cfm**	**dBA**
D125-8	125	4.2	8899	74
D150-10	150	4.2	8899	74
D175-4	175	5.6	11830	78
D200-2	200	5.5	11654	81
SA Level 2 Enclosure				
Model	**Standby ekW**	**m^3/s**	**cfm**	**dBA**
D125-8	125	4.2	8899	74
D150-10	150	4.2	8899	74
D175-4	175	5.2	11018	74
D200-2	200	5.1	10806	75
SA Aluminium Enclosure				
Model	**Standby ekW**	**m^3/s**	**cfm**	**dBA**
D125-8	125	4.2	8899	74
D150-10	150	4.2	8899	75
D175-4	175	5.2	11018	75
D200-2	200	5.1	10806	75

Note: The sound pressure level data shown above is quoted as free field and is for guidance only. Actual levels produced may vary according to site conditions

Enclosure Weights

Model	Standby ekW	WP Industrial		SA Level 1		SA Level 2		SA Aluminium	
		kg	lb	kg	lb	kg	lb	kg	lb
D125-8	125	348	768	393	867	406	896	176	387
D150-10	150								
D175-4	175								
D200-2	200								

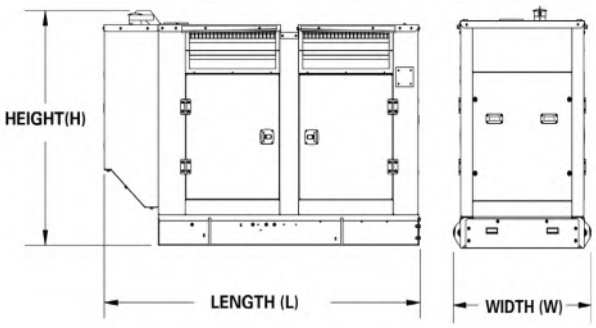

Enclosure Dimensions: Skid Bases

Engine Model	Generator Set Rating ekW	Enclosure	Width 'W'		Length 'L'		Height 'H'	
			mm	in	mm	in	mm	in
C7.1	125	WP	1110	43.7	3204	126.1	1773	69.8
	150							
	175							
	200							
	125	SA Level 1, SA Level 2 and SA Aluminium	1110	43.7	3659	144.1	1852	72.9
	150							
	175							
	200							

Enclosure Dimensions: UL Listed Sub Tank Base

Engine Model	Generator Set Rating ekW	Enclosure	402 Gallon Sub Base Tank				777 Gallon Sub Base Tank			
			Length 'L'		Height 'H'		Length 'L'		Height 'H'	
			mm	in	mm	in	mm	in	mm	in
C7.1	125	WP	4035	158.9	2420	95.3	5035	198.2	2706	106.5
	150									
	175									
	200									
	125	SA Level 1, SA Level 2 and SA Aluminium	4035	158.9	2499	98.4	5035	198.2	2785	106.5
	150									
	175									
	200									

Note: Weight includes oil and coolant but not fuel
Ref: WPIA, WPIB, WPIC, SATCBA, SATCBB, SAT, CBC, SATFBA, SATFBB, SATFBC, ENCAL02, ENCAL03, ENCAL04.

EMCP 4 CONTROL KEY FEATURES

EMCP 4 control features

- Run/Auto/Stop Control
- Speed and Voltage Adjust
- Engine Cycle Crank
- 24-volt DC operation
- Environmental sealed front face
- Text alarm/event descriptions

Digital indication for:

- RPM
- DC volts
- Operating hours
- Oil pressure (psi, kPa or bar)
- Coolant temperature
- Volts (L-L & L-N), frequency (Hz)
- Amps (per phase & average)
- ekW, kVA, kVAR, kW-hr, %kW, PF (4.2 only)

Warning/shutdown with common LED indication of:

- Low oil pressure
- High coolant temperature
- Overspeed
- Emergency Stop
- Failure to start (overcrank)
- Low coolant temperature
- Low coolant level

Programmable protective relaying functions:

- Generator phase sequence
- Over/Under voltage (27/59)
- Over/Under Frequency (81 o/u)
- Reverse Power (kW) (32) (4.2 only)
- Reverse reactive power (kVAr) (32RV)
- Overcurrent (50/51)

Communications:

- 4 digital inputs & 4 relay outputs (4.1)
- 6 digital inputs & 8 relay outputs (4.2)
- 12 digital inputs & 8 relay outputs (4.4)
- Customer data link (Modbus RTU) (4.2 only)
- Accessory module data link (4.2 only)
- Serial annunciator module data link (4.2 only)
- Emergency stop pushbutton

Compatible with the following:

- Digital I/O module
- Local Annunciator
- Remote CAN annunciator
- Remote serial annunciator

FINANCING

Caterpillar offers an array of financial products to help you succeed through financial service excellence. Options include loans, finance lease, operating lease, working capital, and revolving line of credit. Contact your local Cat dealer for availability in your region.

WORLDWIDE PRODUCT SUPPORT

Cat dealers provide extensive post-sale support including maintenance and repair agreements. Cat dealers have over 1,800 dealer branch stores operating in 200 countries. The Caterpillar® SOS℠ program effectively detects internal engine component condition, even the presence of unwanted fluids and combustion by-products.

LET'S DO THE WORK.™

LEHE1586-04 (06/20)

www.Cat.com/electricpower
All rights reserved.
Materials and specifications are subject to change without notice.The International System of Units (SI) is used in this publication.
© 2020 Caterpillar. All Rights Reserved. CAT, CATERPILLAR, LET'S DO THE WORK, their respective logos, "Caterpillar Corporate Yellow", the "Power Edge" and Cat "Modern Hex" trade dress as well as corporate and product identity used herein, are trademarks of Caterpillar and may not be used without permission

Appendix C

HVAC Specifications

38AUZ/D 50 Hz
Commercial Split Systems
Air Conditioning Condensing Units
18.3 kW to 59.2 kW

Carrier
turn to the experts

Product Data

Gemini

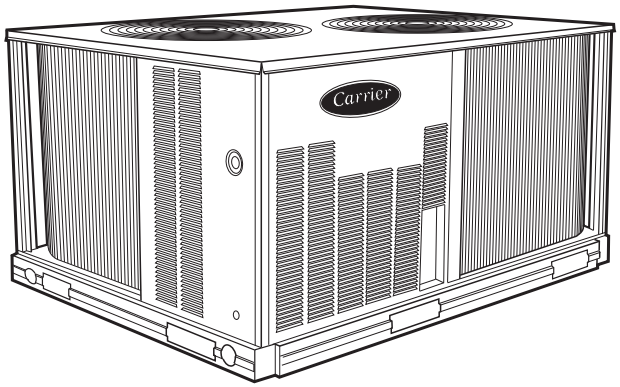

C09227

38AUZ07-08 shown

Certified to ISO 9001

Carrier's air-cooled air conditioning split systems:

- provide a logical solution for commercial needs
- have a rugged, dependable construction
- are available in single and circuit scroll compressor capacity control
- have cooling capability up to 52°C (125°F) ambient and down to 2°C (35°F) ambient standard

FEATURES/BENEFITS

These dependable outdoor air cooled condensing units match Carrier's indoor-air handlers to meet a wide selection of cooling solutions.

Constructed for long life

The 38AUZ single circuit and 38AUD dual circuit, scroll compressor models are designed and built to last. The high efficient designed outdoor coil construction allows for a more efficient design in a smaller cabinet size that utilizes an overall reduction in refrigerant charge. Where conditions require, special coil coating coil protection option is available. Cabinets are constructed of prepainted galvanized steel, delivering unparalleled protection from the environment. Inside and outside surfaces are protected to ensure long life, good looks, and reliable operation. Safety controls are used for enhanced system protection and reliability.

Each unit utilizes the Comfort Alert diagnostic and troubleshoot control system. This protects the units operation and provides valuable diagnostic information when required.

Factory-installed options (FIOPs)

Certified and pre-engineered factory-installed options (FIOPs) allow units to be installed in less time, thereby reducing installed cost. FIOPs include:

- low ambient controls which provide cooling operation down to -29°C (-20°F) ambient temperatures
- non-fused disconnect
- special coil coating coil protection
- louvered hail guard

Efficient operation

These air cooled condensing units will provide EER's up to 12.6 (tested in accordance with ASHRAE 90.1 standards).

This high efficiency will help reduce overall operating cost and energy consumption.

Controls for performance dependability

The 38AU condensing units offer operating controls and components designed for performance dependability. The high efficiency hermetic scroll compressor is engineered for long life and durability. The compressors include vibration isolation for quiet operation. The high-pressure switch protects the entire refrigeration system from abnormally high operating pressures. A low-pressure switch protects the system from loss of charge. These units also include anti-short-cycling protection, which helps to protect the units against compressor failure.

All units include a crankcase heater to eliminate liquid slugging at start-up. Each unit comes standard with the Comfort Alert™ control system. This provides:

- System Go LED indicator
- Fault LED indicator
- Compressor fault LED indicator
- Phase loss protection
- Phase reversal protection
- Safety pressure indicator
- Anti-short cycle protection

Innovative Carrier 40RU packaged air handlers are custom matched to 38AUZ/D condensing units

Information on matching 40RU DX packaged air handler follows for convenience. See separate product data for more details. The 40RU Series has excellent fan performance, efficient direct-expansion (DX) coils, a unique combination of indoor-air quality features, and is easy to install. Its versatility and state-of-the-art features help to ensure economical performance of the split system both now and in the future.

Indoor-air quality (IAQ) features

The unique combination of IAQ features in the 40RU Series air handlers help to ensure that only clean, fresh, conditioned air is delivered to the occupied space.

Direct-expansion (DX) 4 row cooling coils prevent the build-up of humidity in the room, even during part-load conditions.

Standard 2-in. (51mm) disposable filters remove dust and airborne particles from the occupied space for cleaner air.

The pitched, non-corroding drain pan can be adjusted for a right-hand or left-hand connection to suit many applications and provide positive drainage and prevent standing condensate.

The accessory economizer can provide ventilation air to improve indoor-air quality by using demand control ventilation. When used in conjunction with Carrier Comfort System and CO_2 sensors, the economizer admits fresh outdoor air to replace stale, recirculated indoor air.

Economy

The 40RU Series packaged air handlers provide reduced installation expense and energy-efficient performance.

Quick installation is ensured by the multipoise design. Units can be installed in either the horizontal or vertical configuration without modifications. Fan motors and contactors are pre-wired and thermostatic expansion valves (TXVs) are factory-installed on all 40RU models.

High efficiency, precision-balanced fans minimize air turbulence, surging, and unbalanced operation, cutting operation expenses.

The economizer accessory precisely controls the blend of outdoor air and room air to achieve comfort levels. When the outside air enthalpy is suitable, outside air dampers can fully open to provide "free" cooling without energizing mechanical cooling.

Rugged dependability

The 40RU series units are made to last. The die-formed galvanized steel panels ensure structural integrity under all operating conditions. Galvanized steel fan housings are securely mounted to a die-formed galvanized steel fan deck.

Rugged pillow-block bearings (40RU14) are securely fastened to the solid steel fan shaft with split collets and clamp locking devices. Smaller unit sizes have spider-type bearings.

Coil flexibility

Model 40RU direct- expansion coils have galvanized steel casings; inlet and outlet connections are on the same end. The coils are designed for use with Puron (R-410A) refrigerant and have $^3/_8$-in. diameter copper tubes mechanically bonded to aluminum sine-wave fins. The coils include matched, factory-installed thermostatic expansion valves (TXVs) with matching distributor nozzles and offers a removable power element and extended connections.

Easier installation and service

The multipoise design and component layout ensures quick unit installation and operation. Units can be converted from horizontal to vertical operation by simply repositioning the unit. Drain pan connections are duplicated on both sides of the unit. The filters, motor, drive, TXVs, and coil connections are all easily accessed by removing a single side panel.

MODEL NUMBER NOMENCLATURE

1	2	3	4	5	6	7	8	9	10	11	12	13	14	15	16	17	18
3	8	A	U	Z	A	0	7	A	0	A	9	–	0	A	0	A	0

Model Type
Commercial Air Cooled Cond. Unit
Puron® R–410A Refrigerant

Type of Coil
D = Dual Circuit
Z = Single Circuit

Refrigerant Options
A = Standard
B = Low Ambient Controls

Nominal Tonnage
07 = 18.3 kW (5.2 Tons)
08 = 23.2 kW (6.6 Tons)
12 = 29.1 kW (8.3 Tons)
14 = 35.2 kW (10.0 Tons)
16 = 45.8 kW (13.0 Tons)
25 = 59.2 kW (16.8 Tons)

Factory Assigned
A = Default

Factory Assigned
0 = Default

Coil Options (Condenser)
With Round Tube/Plate Fin Design
All models except 14 size (12.5 Ton)
A = Al/Cu Standard
B = Pre Coat Al/Cu
C = E–Coat Al/Cu
E = Cu/Cu
M = Al/Cu Standard with louvered hail guard
N = Pre Coat Al/Cu with louvered hail guard
P = E–Coat Al/Cu with louvered hail guard
R = Cu/Cu – Louvered hail guard
Coil Options (Condenser)
With All Aluminum – NOVATION Design (07–16 sizes)
G = Al/Al Standard
K = E–Coat Al/Al
T = Al/Al with louvered hail guard
W = E–Coat Al/Al with louvered hail guard

Voltage
9 = 400–3–50

Design Rev
– = Factory Assigned

Base Unit Controls
0 = Standard Electro–Mechanical Controls

Factory Assigned
A = Default

Service Options
0 = None

Electrical Options
A = None
C = Non–Fused Disconnect

Brand / Packaging
0 = Standard
1 = LTL

38AU

AHRI CAPACITY RATINGS

UNIT	COOLING STAGES	NOM. CAPACITY (TONS)	NET COOLING CAPACITY (MBH)	TOTAL POWER (kW)	EER
38AUZ07/40RU07	1	5	62.7	5.1	12.2
38AUZ08/40RU08	1	6.3	79.3	6.9	11.5
38AUD12/40RU12	2	8.3	103.0	8.2	12.6
38AUD14/40RU14	2	10.4	125.0	10.9	11.5
38AUD16/40RU16	2	12.5	162.0	13.5	12.0
38AUD25/40RU25	2	16.7	202.2	16.6	12.2

LEGEND

AHRI – Air Conditioning, Heating and Refrigeration Institute

ASHRAE – American Society of Heating, Refrigerating and Air Conditioning, Inc.

EER – Energy Efficiency Ratio

IEER – Integrated Energy Efficiency Ratio

NOTES

1. Rated in accordance with AHRI Standard 340/360, as appropriate.
2. Ratings are based on:
   Cooling Standard: 27°C (80°F) db, 19°C (67°F) wb indoor air temp and 35°C (95°F) db outdoor air temp.
3. All units comply with ASHRAE 90.1 Energy Standard for minimum EER and IEER requirements.

38AU

SOUND POWER LEVELS, dB

UNIT	COOLING STAGES	OUTDOOR SOUND (dB)								
		A–WEIGHTED	63	125	250	500	1000	2000	4000	8000
NOVATION – All Aluminum Coil Design										
38AUZ07	1	82	78.7	91.2	84.4	79.7	76.9	73.5	71.9	67.5
38AUZ08	1	81	81.7	89.7	82.6	77.6	74.4	70.3	68.0	64.2
38AUD12	2	78	79.2	81.1	78.4	75.0	72.9	68.2	66.4	68.2
38AUD14	2	79	76.2	78.6	78.1	75.1	75.2	71.4	67.9	65.1
38AUD16	2	80	90.3	81.8	78.0	76.7	75.2	70.5	66.4	61.9
RTPF – Round Tube/Plate Fin Coil Design										
38AUZ07	1	83	81.7	88.2	84.0	79.7	78.1	74.0	71.4	68.0
38AUZ08	1	83	81.7	88.2	84.0	79.7	78.1	74.0	71.4	68.0
38AUD12	2	80	76.0	79.9	79.8	77.4	75.6	69.8	67.8	66.4
38AUD16	2	83	86.7	81.2	78.9	80.4	78.0	74.2	70.2	65.0
38AUD25	2	85	91.0	85.0	80.0	86.0	79.0	73.0	68.0	63.0

NOTE: Outdoor sound data is measure in accordance with AHRI standard 270–2008.

LEGEND:

dB = Decibel

PHYSICAL DATA

SINGLE CIRCUIT MODELS with RTPF – Round Tube/Plate Fin Coil Design		
	38AUZ07	**38AUZ08**
Refrigeration System		
# Circuits / # Comp. / Type	1 / 1 / Scroll	1 / 1 / Scroll
R–410a shipping charge A/B (lbs, 50 Hz)	11	13
System charge w/ fan coil* (50 Hz)	14	17
Metering device	TXV	TXV
High–press. Trip / Reset (psig)	630 / 505	630 / 505
Low–press. Trip / Reset (psig)	54 / 117	54 / 117
Cond. Coil		
Material	Al/Cu	Al/Cu
Coil type	RTPF	RTPF
Rows / FPI	2 / 17	2 / 17
Total face area (ft2)	17.5	17.5
Cond. fan / motor		
Qty / Motor drive type	2 / direct	2 / direct
Motor HP / RPM	1/4 / 1100	1/4 / 1100
Fan diameter (in)	22	22
Nominal Airflow (cfm)	6000	6000
Watts (total)	610	610
Piping Connections		
Qty / Suction (in. ODS)	1 / 1 1/8	1 / 1 1/8
Qty / Liquid (in. ODS)	1 / 3/8	1 / 1/2

SINGLE CIRCUIT MODELS with NOVATION – All Aluminum coil Design		
	38AUZ07	**38AUZ08**
Refrigeration System		
# Circuits / # Comp. / Type	1 / 1 / Scroll	1 / 1 / Scroll
R–410a shipping charge A/B (lbs)	4.4	4.9
System charge w/ fan coil	8.4	10.2
System charge w/ fan coil (50hz)	9.0	12.3
Metering device	TXV	TXV
High–press. Trip / Reset (psig)	630 / 505	630 / 505
Low–press. Trip / Reset (psig)	54 / 117	54 / 117
Cond. Coil		
Material	Al	Al
Coil type	microchannel	microchannel
Rows / FPI	1 / 17	1 / 17
total face area (ft2)	17.5	20.5
Cond. fan / motor		
Qty / Motor drive type	2 / direct	2 / direct
Motor HP / RPM	1/4 / 1100	1/4 / 1100
Fan diameter (in)	22	22
Nominal Airflow (cfm)	6,000	6,000
Watts (total)	610	610

RTPF – Round tube /plate fin design

* Approximate system charge with about 25 ft piping of sizes indicated with matched 40RU.

PHYSICAL DATA (CONT)

38AU

DUAL CIRCUIT MODELS with RTPF – Round Tube/Plate Fin Coil Design			
	38AUD12	**38AUD16**	**38AUD25**
Refrigeration System			
# Circuits / # Comp. / Type	2 / 2 / Scroll	2 / 2 / Scroll	2 / 2 / Scroll
R–410a shipping charge A/B (lbs, 50 Hz)	8.0 / 8.0	16.0 / 16.0	14.0 / 14.0
System charge w/ fan coil* (50 Hz)	11.0 / 10.0	22.0 / 22.0	19.0 / 19.0
Metering device	TXV	TXV	TXV
High–press. Trip / Reset (psig)	630 / 505	630 / 505	630 / 505
Low–press. Trip / Reset (psig)	54 / 117	54 / 117	54 / 117
Compressor			
Model	ZP51 (2)	ZP83 (2)	ZP103 (2)
Oil Charge A/B (oz)	42 / 42	60 / 60	110 / 110
Speed rpm 50 Hz	2900	2900	2900
Cond. Coil			
Material	Al/Cu	Al/Cu	Al/Cu
Coil type	RTPF	RTPF	RTPF
Rows / FPI	2 / 17	2 / 17	2 / 17
Total face area (ft2)	25.1	23.5 x 2	25.0 x 2
Cond. fan / motor			
Qty / Motor drive type	2 / direct	3 / direct	4 / direct
Motor HP / RPM	1/4 / 1100	1/4 / 1100	1/4 / 1100
Fan diameter (in)	22	22	22
Nominal Airflow (cfm)	6000	9000	12000
Watts (total)	610	970	1150
Piping Connections			
Qty / Suction (in. ODS)	2 / 1 1/8	2 / 1 3/8	2 / 1 3/8
Qty / Liquid (in. ODS)	2 / 3/8	2 / 1/2	2 / 1/2

DUAL CIRCUIT MODELS with NOVATION – All Aluminum coil Design			
	38AUD12	**38AUD14**	**38AUD16**
Refrigeration System			
# Circuits / # Comp. / Type	2/2/Scroll	2/2/Scroll	2/2/Scroll
R–410a shipping charge A/B (lbs)	3.0 /3.1	3.7/3.9	6.1/6.1
System charge w/ fan coil	7.4 / 7.4	10.8 / 10.8	12.0/12.0
System charge w/ fan coil (50hz)	7.5 / 7.5	11.2 / 11.2	14.0 /14.0
Metering device	TXV	TXV	TXV
High–press. Trip / Reset (psig)	630 / 505	630 / 505	630 / 505
Low–press. Trip / Reset (psig)	54 / 117	54 / 117	54 / 117
Cond. Coil			
Material	Al	Al	Al
Coil type	microchannel	microchannel	microchannel
Rows / FPI	1 / 17	1 / 17	1 / 17
total face area (ft2)	25.0	31.8	25.0 x 2
Cond. fan / motor			
Qty / Motor drive type	2 / direct	2 / direct	3 / direct
Motor HP / RPM	1/4 / 1100	1/4 / 1100	1/4 / 1100
Fan diameter (in)	22	22	22
Nominal Airflow (cfm)	6,000	6,000	10,000
Watts (total)	610	610	970

RTPF – Round tube /plate fin design

* Approximate system charge with about 25 ft piping of sizes indicated with matched 40RU.

DIMENSIONS

UNIT	STD. UNIT WT.		CORNER A		CORNER B		CORNER C		CORNER D		CENTER OF GRAVITY			UNIT HEIGHT
	KG.	LBS.	KG.	LBS.	KG.	LBS.	KG.	LBS.	KG.	LBS.	X	Y	Z	H
38AUZ-07 (MCHX)	149	328	58	128	31	68	28	62	32	70	21 [533.4]	19 [482.6]	13 [330.2]	42-3/8 [1076.0]
38AUZ-08 (MCHX)	160	353	63	138	33	72	29	65	35	78	19 [482.6]	23 [584.2]	13 [330.2]	42-3/8 [1076.0]
38AUD-12 (MCHX)	226	499	88	193	50	111	38	72	56	123	20 [508.0]	23 [584.2]	15 [381.0]	50-3/8 [1279.2]
38AUD-14 (MCHX)	229	505	86	190	40	88	34	76	68	151	20 [508.0]	24 [609.6]	15 [381.0]	50-3/8 [1279.2]
38AUZ-07 (RTPF)	176	389	64	141	44	96	28	62	41	91	18 [457.2]	24 [609.6]	21 [533.4]	42-3/8 [1076.0]
38AUZ-08 (RTPF)	177	391	64	142	44	96	28	62	41	91	18 [457.2]	24 [609.6]	21 [533.4]	42-3/8 [1076.0]
38AUD-12 (RTPF)	234	516	84	185	53	117	38	83	59	131	19 [482.6]	23 [584.2]	24 [609.6]	50-3/8 [1279.2]

CG CENTER OF GRAVITY

DIRECTION OF AIR FLOW

DIMENSIONS IN [ ] ARE IN MM

SERVICE VALVE CONNECTIONS		
UNIT	SUCTION	LIQUID
38AUZ07	1-1/8 [28.6]	3/8 [9.5]
38AUZ08	1-1/8 [28.6]	1/2 [12.7]
38AUD12	1-1/8 [28.6]	3/8 [9.5]
38AUD14	1-3/8 [34.9]	1/2 [12.7]

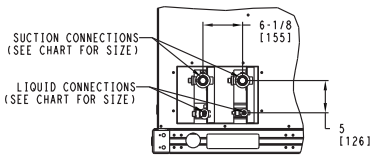

RIGHT SIDE VIEW
(FOR 38AUD SYSTEMS)

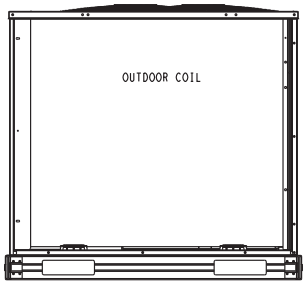

PLAN VIEW

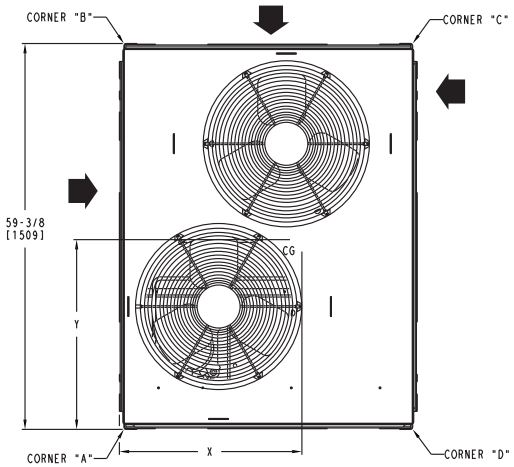

TOP VIEW

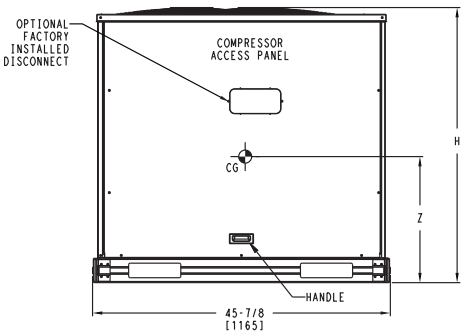

FRONT VIEW

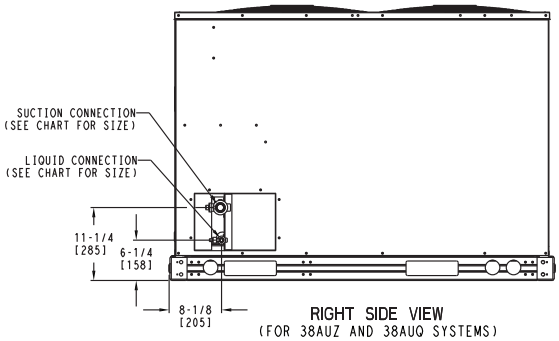

RIGHT SIDE VIEW
(FOR 38AUZ AND 38AUQ SYSTEMS)

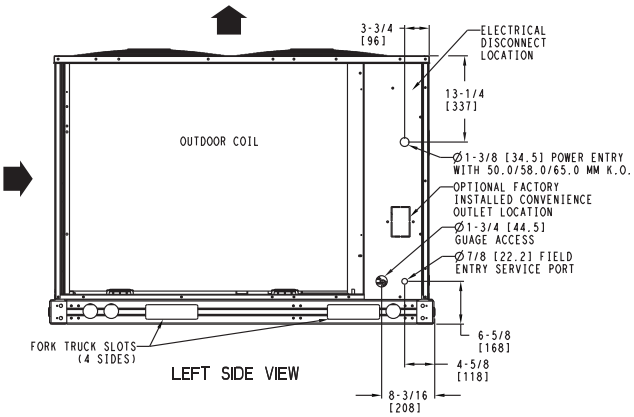

LEFT SIDE VIEW

NOTES:

1. MINIMUM CLEARANCE (LOCAL CODES OR JURISDICTION MAY PREVAIL):
   A. BOTTOM TO COMBUSTIBLE SURFACES: 0 INCHES.
   B. OUTDOOR COIL, FOR PROPER AIR FLOW: 36 INCHES ONE SIDE, 12 INCHES THE OTHER. THE SIDE GETTING THE GREATER CLEARANCE IS OPTIONAL.
   C. OVERHEAD: 60 INCHES, TO ASSURE PROPER OUTDOOR FAN OPERATION.
   D. BETWEEN UNITS: CONTROL BOX SIDE, 42 INCHES PER NEC.
   E. BETWEEN UNIT AND UNGROUNDED SURFACES: CONTROL BOX SIDE, 36 INCHES PER NEC.
   F. BETWEEN UNIT AND BLOCK OR CONCRETE WALLS AND OTHER GROUNDED SURFACES: CONTROL BOX SIDE, 42 INCHES PER NEC.
2. WITH EXCEPTION OF THE CLEARANCE FOR THE OUTDOOR COIL AS STATED IN NOTE 1B, A REMOVABLE FENCE OR BARRICADE REQUIRES NO CLEARANCE.
3. UNITS MAY BE INSTALLED ON COMBUSTIBLE FLOORS MADE FROM WOOD OR CLASS A, B OR C ROOF COVERING MATERIAL.

C10590

38AU

DIMENSIONS (cont.)

UNIT	STD. UNIT WT.		CORNER A		CORNER B		CORNER C		CORNER D		CENTER OF GRAVITY			UNIT HEIGHT
	KG.	LBS.	KG.	LBS.	KG.	LBS.	KG.	LBS.	KG.	LBS.	X	Y	Z	H
38AUD16 (MCHX)	288	633	100	220	61	134	61.5	135	65.5	144	38 [965.2]	19 [482.6]	15 [381]	50-3/8 [1279.2]
38AUD16 (RTPF)	332	731	107	237	78	172	61	135	84	186	38 [965.2]	19 [482.6]	17 [431.8]	50-3/8 [1279.2]

CG CENTER OF GRAVITY

DIRECTION OF AIR FLOW

DIMENSIONS IN [ ] ARE IN MM

SERVICE VALVE CONNECTIONS			QTY
UNIT	SUCTION	LIQUID	
38AUD16	1-3/8 [34.9]	1/2 [12.7]	2 EA

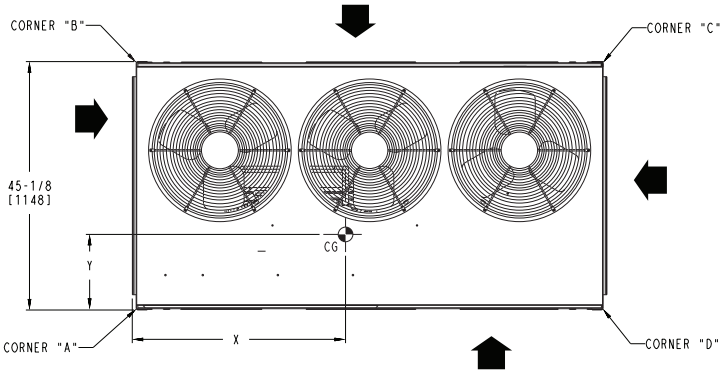

TOP VIEW

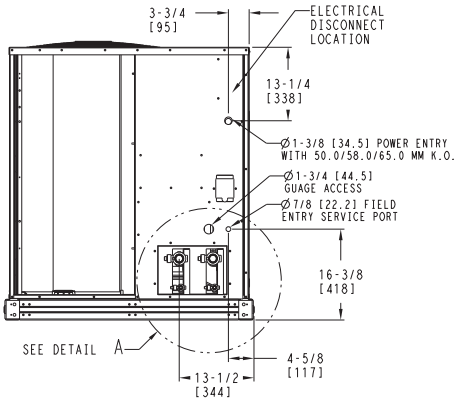

LEFT SIDE VIEW FOR 38AUD SYSTEMS

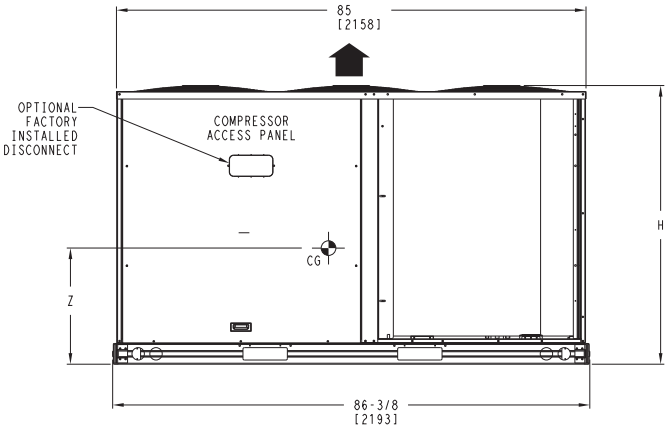

FRONT VIEW

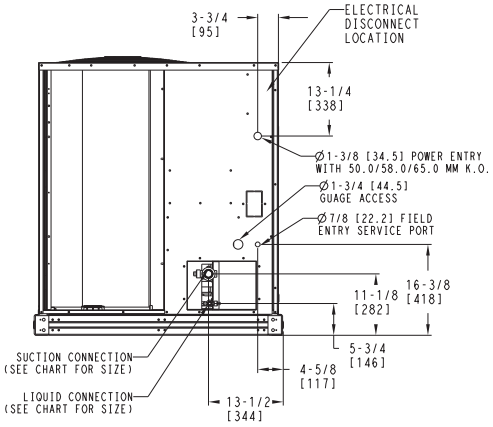

LEFT SIDE VIEW

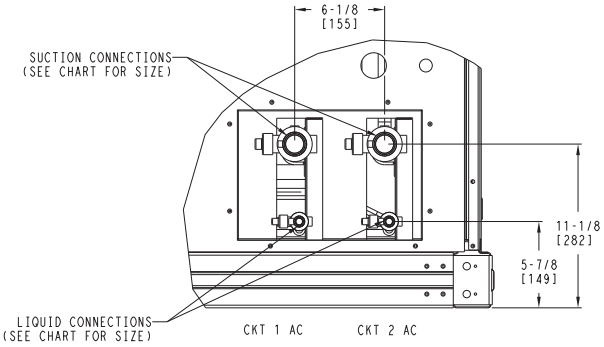

DETAIL A
(NOTE POSITION OF CKT 1)

NOTES:
1. MINIMUM CLEARANCE (LOCAL CODES OR JURISDICTION MAY PREVAIL):
   A. BOTTOM TO COMBUSTIBLE SURFACES: 0 INCHES.
   B. OUTDOOR COIL, FOR PROPER AIR FLOW: 36 INCHES ONE SIDE, 12 INCHES THE OTHER. THE SIDE GETTING THE GREATER CLEARANCE IS OPTIONAL.
   C. OVERHEAD: 60 INCHES, TO ASSURE PROPER OUTDOOR FAN OPERATION.
   D. BETWEEN UNITS: CONTROL BOX SIDE, 42 INCHES PER NEC.
   E. BETWEEN UNIT AND UNGROUNDED SURFACES: CONTROL BOX SIDE, 36 INCHES PER NEC.
   F. BETWEEN UNIT AND BLOCK OR CONCRETE WALLS AND OTHER GROUNDED SURFACES: CONTROL BOX SIDE, 42 INCHES PER NEC.
2. WITH EXCEPTION OF THE CLEARANCE FOR THE OUTDOOR COIL AS STATED IN NOTE 1B, A REMOVABLE FENCE OR BARRICADE REQUIRES NO CLEARANCE.
3. UNITS MAY BE INSTALLED ON COMBUSTIBLE FLOORS MADE FROM WOOD OR CLASS A, B OR C ROOF COVERING MATERIAL.

C10591

DIMENSIONS (cont.)

UNIT	STD. UNIT WT.		CORNER A		CORNER B		CORNER C		CORNER D		CENTER OF GRAVITY			UNIT HEIGHT
	KG.	LBS.	KG.	LBS.	KG.	LBS.	KG.	LBS.	KG.	LBS.	X	Y	Z	H
38AUD25 (RTPF)	444	978	163	360	85	188	67	147	128	283	38 [965.2]	23 [584.2]	17 [431.8]	50-3/8 [1279.2]

CG CENTER OF GRAVITY

DIRECTION OF AIR FLOW

DIMENSIONS IN [ ] ARE IN MM

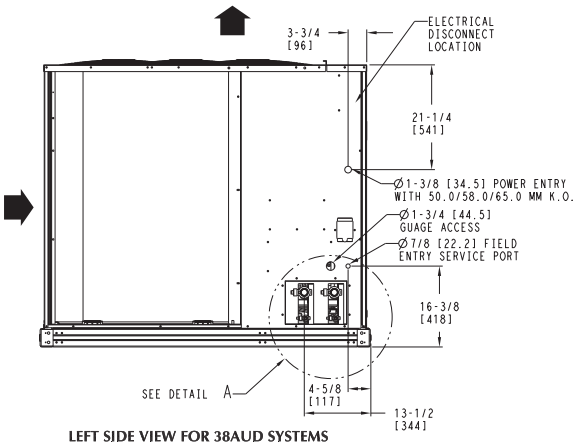

LEFT SIDE VIEW FOR 38AUD SYSTEMS

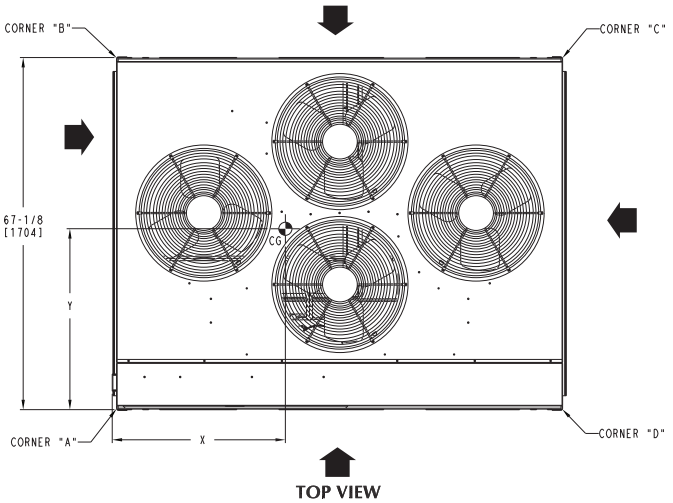

TOP VIEW

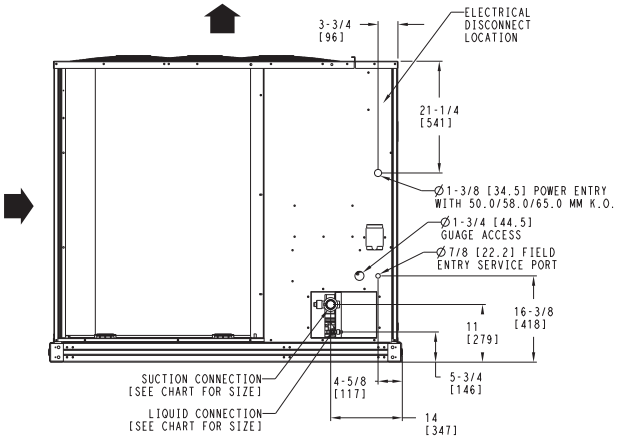

LEFT SIDE VIEW

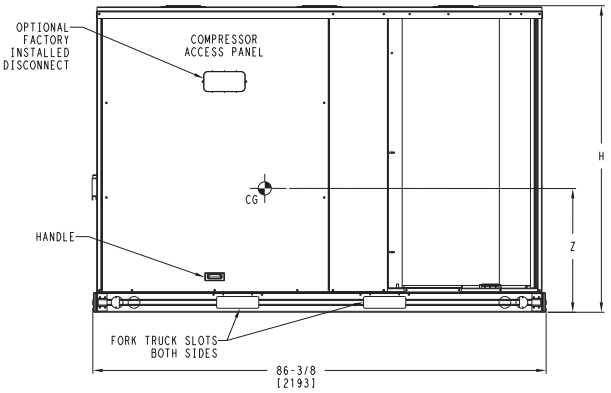

FRONT VIEW

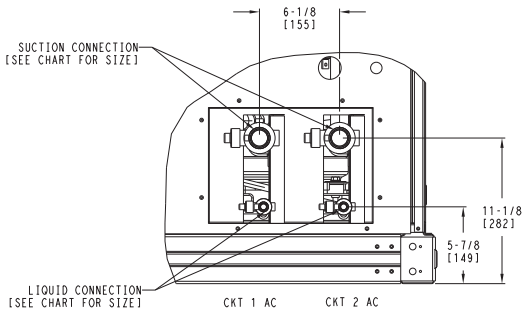

DETAIL A
(NOTE POSITION OF CKT 1)

NOTES:
1. MINIMUM CLEARANCE (LOCAL CODES OR JURISDICTION MAY PREVAIL):
   A. BOTTOM TO COMBUSTIBLE SURFACES: 0 INCHES.
   B. OUTDOOR COIL, FOR PROPER AIR FLOW: 36 INCHES ONE SIDE, 12 INCHES THE OTHER. THE SIDE GETTING THE GREATER CLEARANCE IS OPTIONAL.
   C. OVERHEAD: 60 INCHES, TO ASSURE PROPER OUTDOOR FAN OPERATION.
   D. BETWEEN UNITS: CONTROL BOX SIDE, 42 INCHES PER NEC.
   E. BETWEEN UNIT AND UNGROUNDED SURFACES: CONTROL BOX SIDE, 36 INCHES PER NEC.
   F. BETWEEN UNIT AND BLOCK OR CONCRETE WALLS AND OTHER GROUNDED SURFACES: CONTROL BOX SIDE, 42 INCHES PER NEC.
2. WITH EXCEPTION OF THE CLEARANCE FOR THE OUTDOOR COIL AS STATED IN NOTE 1B, A REMOVABLE FENCE OR BARRICADE REQUIRES NO CLEARANCE.
3. UNITS MAY BE INSTALLED ON COMBUSTIBLE FLOORS MADE FROM WOOD OR CLASS A, B OR C ROOF COVERING MATERIAL.

SERVICE VALVE CONNECTIONS			QTY
UNIT	SUCTION	LIQUID	
38AUD25	1-3/8 [34.9]	1/2 [12.7]	2 EA

C10592

38AU

OPTIONS AND ACCESSORIES

38AUZ/D OPTIONS AND ACCESSORIES

ITEM	OPTION*	ACCESSORY†
Disconnect Switch (non-fused)	X	
Special–coated Coil Protection	X	
Low Ambient Temperature MotorMaster I® Control	X	X
Wired Condenser Coil Grille (Novation 07–14 models only)		X
Louvered Hail Guard	X	X
Programmable Thermostats		X

* Factory-installed option.
† Field-installed accessory.

38AUZ/38AUD factory-installed options

E-coated aluminum-fin coils have a flexible and durable epoxy coating uniformly applied to all coil surfaces. Unlike brittle phenolic dip and bake coatings, E-coating provides superior protection with unmatched flexibility, edge coverage, metal adhesion, thermal performance, and most importantly, corrosion resistance.

E-coated coils provide this protection since all coil surfaces are completely encapsulated from environmental contamination. This coating is especially suitable in industrial environments.

Pre-coated coils (RTPF coils only) provide protection in mild coastal environments.

–29°C (–20°F) low-ambient temperature kit option (MotorMaster I®) controls outdoor-fan motor operation to maintain the correct head pressure at low outdoor ambient temperatures.

Louvered hail guard package protects coils against damage from flying debris and hail.

Non-fused disconnect switch is used to remove power locally at the condensing unit. This switch also includes a power lockout capability to protect the service person. This lockout switch saves the service person time and effort because there is no need to access a distant disconnect switch while servicing the unit.

NOTE: Non-fused disconnect switch cannot be used when unit MOCP electrical rating exceeds 80 amps.

38AUZ/D field-installed accessories

–29°C (–20°F) low-ambient temperature kit accessory (MotorMaster I®) controls outdoor-fan motor operation to maintain the correct head pressure at low outdoor ambient temperatures.

Louvered hail guard package protects coils against damage from flying debris and hail.

Condenser coil grille package protects condensing unit coil from impact by large objects and vandalism.

Carrier's line of thermostats provide both programmable and non-programmable capability with the new **Debonair®** line of commercial programmable thermostats. The **Commercial Electronic** thermostats provide 7-day programmable capability for economical applications.

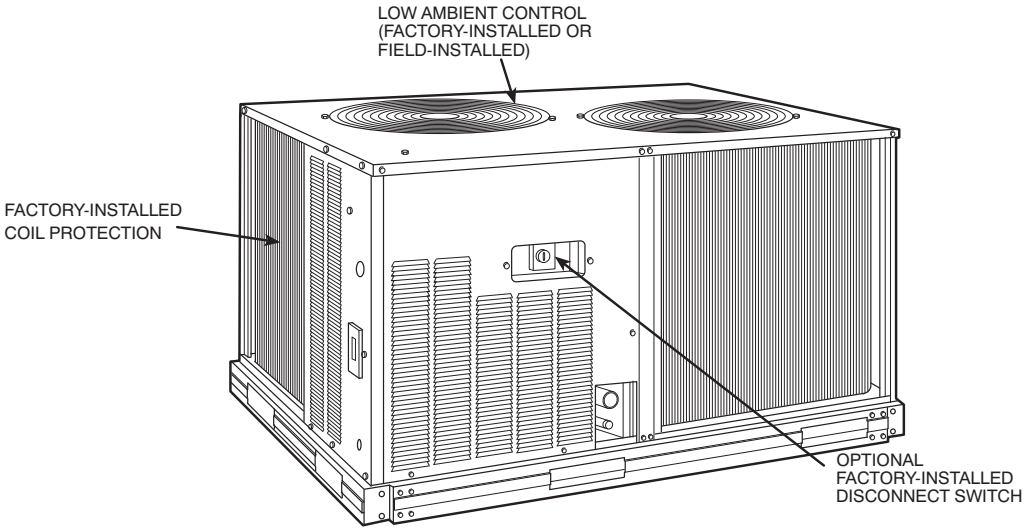

C10609

40RU OPTIONS AND ACCESSORIES

ITEM	OPTION*	ACCESSORY†
Alternate Fan Motors	X	
Alternate Drives	X	
CO_2 Sensors		X
Condensate Drain Trap		X
Discharge Plenum		X
Economizer		X
Electric Heat		X
Hot Water Heating Coils		X
Overhead Suspension Package		X
Prepainted Units	X	
Return Air Grille		X
Steam Heating Coil		X
Subbase		X

* Factory-installed option.
† Field-installed accessory.

40RU factory-installed options

Alternate fan motors and drives are available to provide the widest possible range of performance.

Units constructed of prepainted steel are available from the factory for applications that require painted units. Unit color is American Sterling Gray.

40RU field-installed accessories

Two-row hot water coils have $^5/_8$-in. diameter copper tubes mechanically bonded to aluminum plate fins. Coils have non-ferrous headers.

One-row steam coil has 1-in. OD copper tube and aluminum fins. The Inner Distributing Tube (IDT) design provides uniform temperatures across the coil face. The IDT steam coils are especially suited to applications where sub-freezing air enters the unit.

Electric resistance heat coils have an open-wire design and are mounted in a rigid frame. Safety cutouts for high temperature conditions are standard.

Economizer (enthalpy controlled) provides ventilation air and provides “free” cooling if the outside ambient temperature and humidity are suitable. The economizer can also be used in conjunction with Carrier Comfort System thermostats and CO_2 sensors to help meet indoor air quality requirements. The economizer can be used in both vertical and horizontal positions.

Discharge plenum directs the air discharge into the occupied space; integral horizontal and vertical louvers enable redirection of airflow. This accessory is available unpainted or painted.

Return-air grille provides a protective barrier over the return-air opening and gives a finished appearance to units installed in the occupied space. This accessory is available unpainted or painted.

Subbase provides a stable, raised platform and room for condensate drain connection for floor-mounted units. This accessory is available unpainted or painted.

Overhead suspension package includes necessary brackets to support units in horizontal installations.

CO_2 sensors can be used in conjunction with the economizer accessory to help meet indoor air quality requirements. The sensor signals the economizer to open when the CO_2 level in the space exceeds the setpoint. A Carrier Comfort System programmable thermostat can also be used to override the sensor if the outside-air temperature is too high or too low.

Condensate drain trap includes an overflow shutoff switch that can be wired to turn off the unit if the trap becomes plugged. The kit also includes a wire harness that can be connected to an alarm if desired. The transparent trap is designed for easy service and maintenance.

OPTIONS AND ACCESSORIES (cont.)

40RU WITH DISCHARGE PLENUM RETURN-AIR GRILLE AND SUBBASE

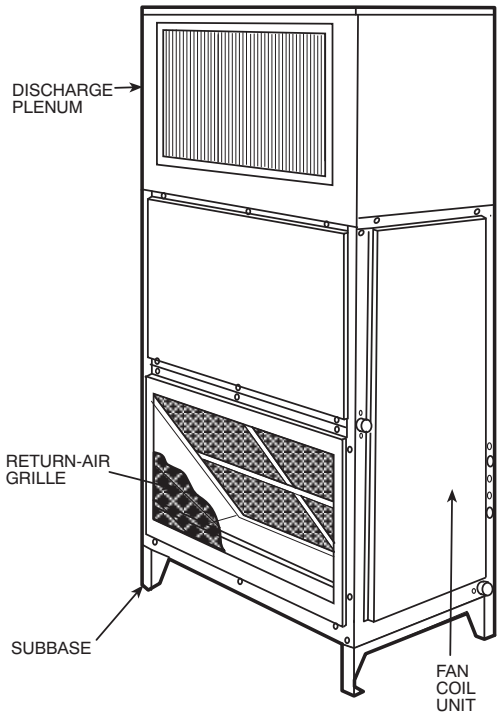

40RU WITH HOT WATER OR STEAM COIL

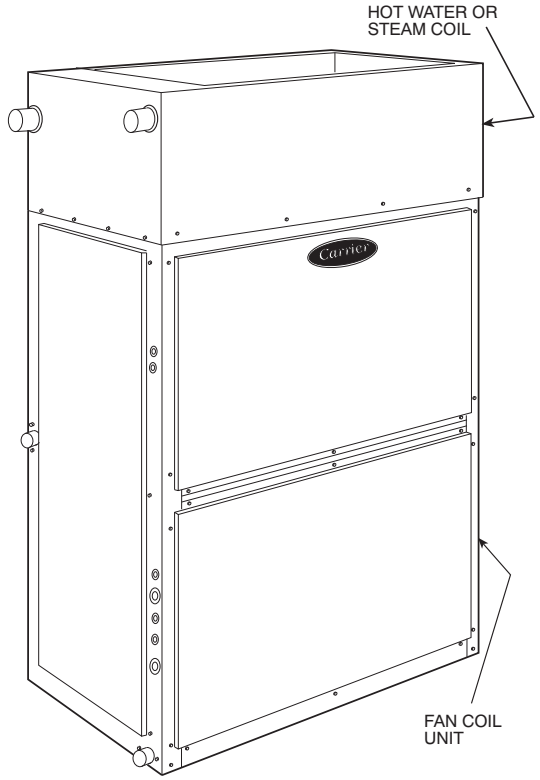

40RU WITH ECONOMIZER

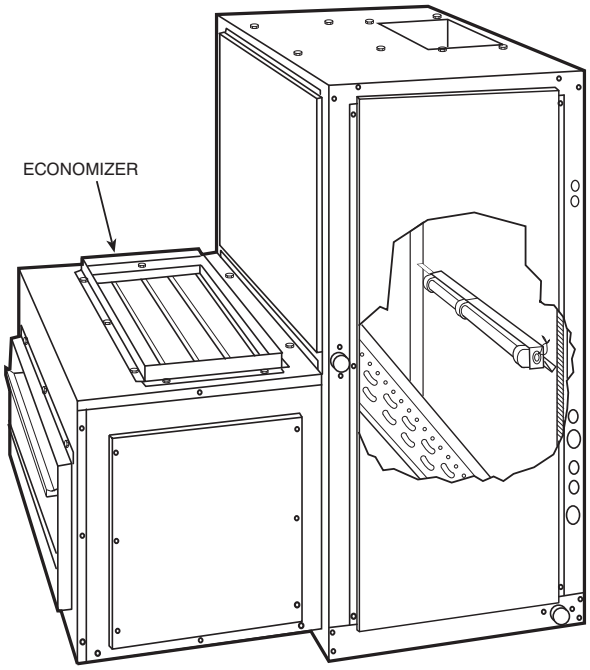

40RU WITH CONDENSATE TRAP

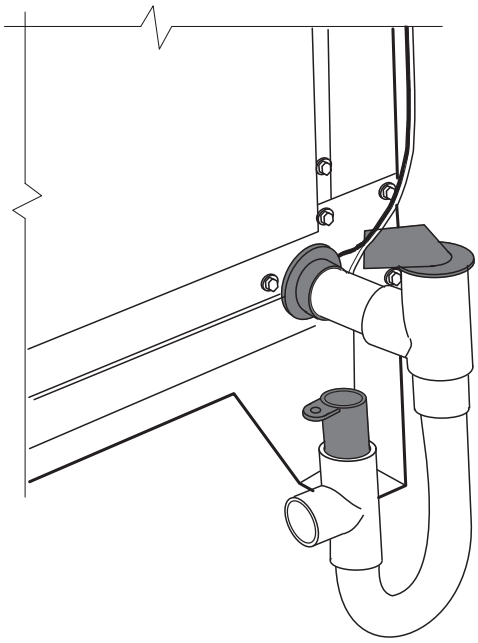

C10610

TYPICAL WIRING SCHEMATIC

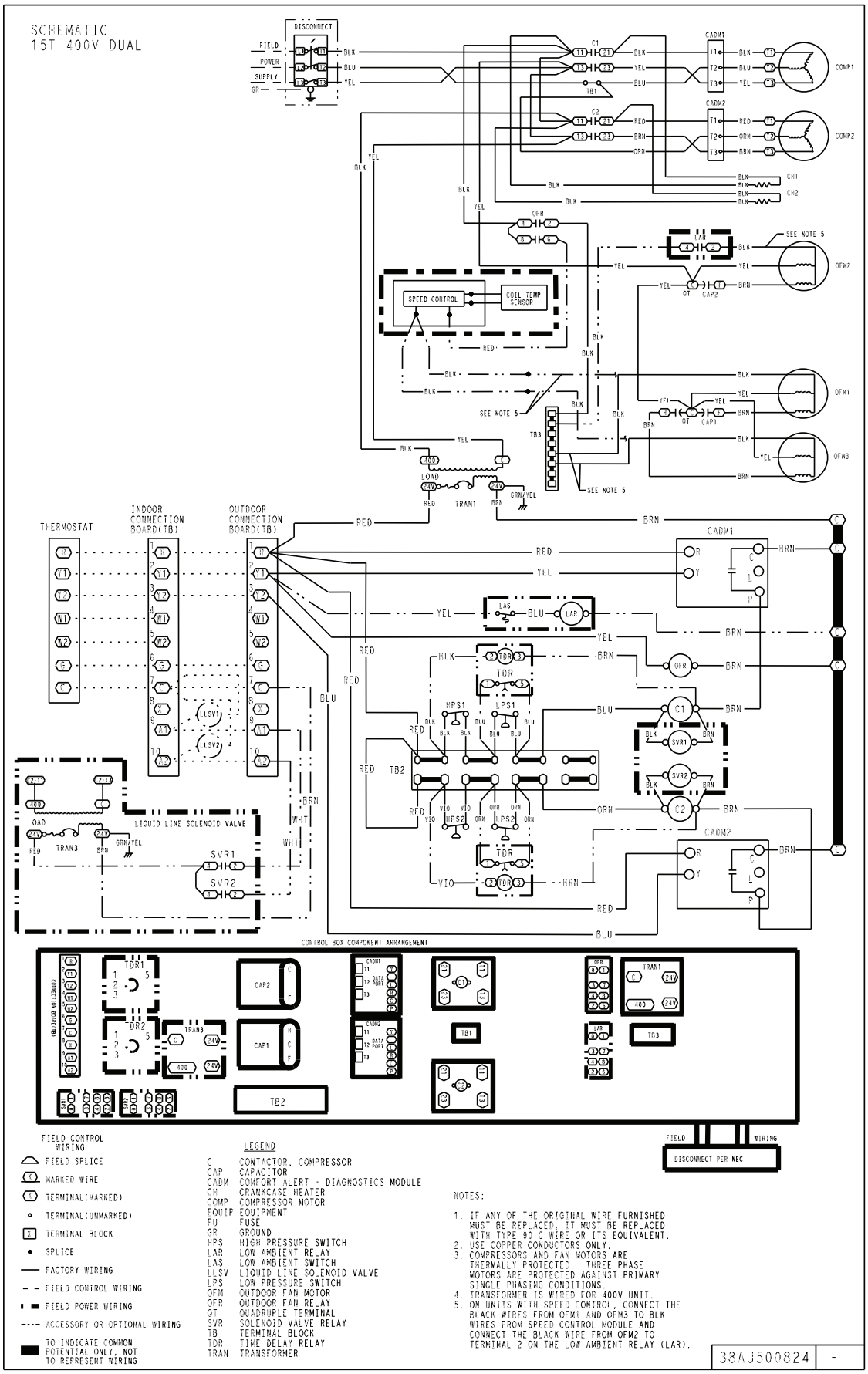

Typical 38AUD16 Dual Circuit

38AU

38AUZ/D 50 Hz
Commercial Split Systems
Air Conditioning Condensing Units
18.3 kW to 59.2 kW

Carrier
turn to the experts

Product Data

Gemini

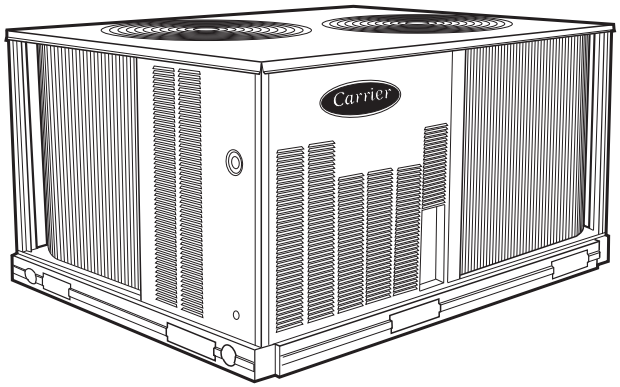

C09227

38AUZ07-08 shown

Certified to ISO 9001

Carrier's air-cooled air conditioning split systems:

- provide a logical solution for commercial needs
- have a rugged, dependable construction
- are available in single and circuit scroll compressor capacity control
- have cooling capability up to 52°C (125°F) ambient and down to 2°C (35°F) ambient standard

FEATURES/BENEFITS

These dependable outdoor air cooled condensing units match Carrier's indoor-air handlers to meet a wide selection of cooling solutions.

Constructed for long life

The 38AUZ single circuit and 38AUD dual circuit, scroll compressor models are designed and built to last. The high efficient designed outdoor coil construction allows for a more efficient design in a smaller cabinet size that utilizes an overall reduction in refrigerant charge. Where conditions require, special coil coating coil protection option is available. Cabinets are constructed of prepainted galvanized steel, delivering unparalleled protection from the environment. Inside and outside surfaces are protected to ensure long life, good looks, and reliable operation. Safety controls are used for enhanced system protection and reliability.

Each unit utilizes the Comfort Alert diagnostic and troubleshoot control system. This protects the units operation and provides valuable diagnostic information when required.

Factory-installed options (FIOPs)

Certified and pre-engineered factory-installed options (FIOPs) allow units to be installed in less time, thereby reducing installed cost. FIOPs include:

- low ambient controls which provide cooling operation down to -29°C (-20°F) ambient temperatures
- non-fused disconnect
- special coil coating coil protection
- louvered hail guard

Efficient operation

These air cooled condensing units will provide EER's up to 12.6 (tested in accordance with ASHRAE 90.1 standards).

This high efficiency will help reduce overall operating cost and energy consumption.

Controls for performance dependability

The 38AU condensing units offer operating controls and components designed for performance dependability. The high efficiency hermetic scroll compressor is engineered for long life and durability. The compressors include vibration isolation for quiet operation. The high-pressure switch protects the entire refrigeration system from abnormally high operating pressures. A low-pressure switch protects the system from loss of charge. These units also include anti-short-cycling protection, which helps to protect the units against compressor failure.

All units include a crankcase heater to eliminate liquid slugging at start-up. Each unit comes standard with the Comfort Alert™ control system. This provides:

- System Go LED indicator
- Fault LED indicator
- Compressor fault LED indicator
- Phase loss protection
- Phase reversal protection
- Safety pressure indicator
- Anti-short cycle protection

Innovative Carrier 40RU packaged air handlers are custom matched to 38AUZ/D condensing units

Information on matching 40RU DX packaged air handler follows for convenience. See separate product data for more details. The 40RU Series has excellent fan performance, efficient direct-expansion (DX) coils, a unique combination of indoor-air quality features, and is easy to install. Its versatility and state-of-the-art features help to ensure economical performance of the split system both now and in the future.

Indoor-air quality (IAQ) features

The unique combination of IAQ features in the 40RU Series air handlers help to ensure that only clean, fresh, conditioned air is delivered to the occupied space.

Direct-expansion (DX) 4 row cooling coils prevent the build-up of humidity in the room, even during part-load conditions.

Standard 2-in. (51mm) disposable filters remove dust and airborne particles from the occupied space for cleaner air.

The pitched, non-corroding drain pan can be adjusted for a right-hand or left-hand connection to suit many applications and provide positive drainage and prevent standing condensate.

The accessory economizer can provide ventilation air to improve indoor-air quality by using demand control ventilation. When used in conjunction with Carrier Comfort System and CO_2 sensors, the economizer admits fresh outdoor air to replace stale, recirculated indoor air.

Economy

The 40RU Series packaged air handlers provide reduced installation expense and energy-efficient performance.

Quick installation is ensured by the multipoise design. Units can be installed in either the horizontal or vertical configuration without modifications. Fan motors and contactors are pre-wired and thermostatic expansion valves (TXVs) are factory-installed on all 40RU models.

High efficiency, precision-balanced fans minimize air turbulence, surging, and unbalanced operation, cutting operation expenses.

The economizer accessory precisely controls the blend of outdoor air and room air to achieve comfort levels. When the outside air enthalpy is suitable, outside air dampers can fully open to provide "free" cooling without energizing mechanical cooling.

Rugged dependability

The 40RU series units are made to last. The die-formed galvanized steel panels ensure structural integrity under all operating conditions. Galvanized steel fan housings are securely mounted to a die-formed galvanized steel fan deck.

Rugged pillow-block bearings (40RU14) are securely fastened to the solid steel fan shaft with split collets and clamp locking devices. Smaller unit sizes have spider-type bearings.

Coil flexibility

Model 40RU direct- expansion coils have galvanized steel casings; inlet and outlet connections are on the same end. The coils are designed for use with Puron (R-410A) refrigerant and have $^3/_8$-in. diameter copper tubes mechanically bonded to aluminum sine-wave fins. The coils include matched, factory-installed thermostatic expansion valves (TXVs) with matching distributor nozzles and offers a removable power element and extended connections.

Easier installation and service

The multipoise design and component layout ensures quick unit installation and operation. Units can be converted from horizontal to vertical operation by simply repositioning the unit. Drain pan connections are duplicated on both sides of the unit. The filters, motor, drive, TXVs, and coil connections are all easily accessed by removing a single side panel.

MODEL NUMBER NOMENCLATURE

1	2	3	4	5	6	7	8	9	10	11	12	13	14	15	16	17	18
3	8	A	U	Z	A	0	7	A	0	A	9	–	0	A	0	A	0

Model Type
Commercial Air Cooled Cond. Unit
Puron® R–410A Refrigerant

Type of Coil
D = Dual Circuit
Z = Single Circuit

Refrigerant Options
A = Standard
B = Low Ambient Controls

Nominal Tonnage
07 = 18.3 kW (5.2 Tons)
08 = 23.2 kW (6.6 Tons)
12 = 29.1 kW (8.3 Tons)
14 = 35.2 kW (10.0 Tons)
16 = 45.8 kW (13.0 Tons)
25 = 59.2 kW (16.8 Tons)

Factory Assigned
A = Default

Factory Assigned
0 = Default

Coil Options (Condenser)
With Round Tube/Plate Fin Design
All models except 14 size (12.5 Ton)
A = Al/Cu Standard
B = Pre Coat Al/Cu
C = E–Coat Al/Cu
E = Cu/Cu
M = Al/Cu Standard with louvered hail guard
N = Pre Coat Al/Cu with louvered hail guard
P = E–Coat Al/Cu with louvered hail guard
R = Cu/Cu – Louvered hail guard
Coil Options (Condenser)
With All Aluminum – NOVATION Design (07–16 sizes)
G = Al/Al Standard
K = E–Coat Al/Al
T = Al/Al with louvered hail guard
W = E–Coat Al/Al with louvered hail guard

Voltage
9 = 400–3–50

Design Rev
– = Factory Assigned

Base Unit Controls
0 = Standard Electro–Mechanical Controls

Factory Assigned
A = Default

Service Options
0 = None

Electrical Options
A = None
C = Non–Fused Disconnect

Brand / Packaging
0 = Standard
1 = LTL

38AU

AHRI CAPACITY RATINGS

UNIT	COOLING STAGES	NOM. CAPACITY (TONS)	NET COOLING CAPACITY (MBH)	TOTAL POWER (kW)	EER
38AUZ07/40RU07	1	5	62.7	5.1	12.2
38AUZ08/40RU08	1	6.3	79.3	6.9	11.5
38AUD12/40RU12	2	8.3	103.0	8.2	12.6
38AUD14/40RU14	2	10.4	125.0	10.9	11.5
38AUD16/40RU16	2	12.5	162.0	13.5	12.0
38AUD25/40RU25	2	16.7	202.2	16.6	12.2

LEGEND

AHRI – Air Conditioning, Heating and Refrigeration Institute

ASHRAE – American Society of Heating, Refrigerating and Air Conditioning, Inc.

EER – Energy Efficiency Ratio

IEER – Integrated Energy Efficiency Ratio

NOTES

1. Rated in accordance with AHRI Standard 340/360, as appropriate.
2. Ratings are based on:
   Cooling Standard: 27°C (80°F) db, 19°C (67°F) wb indoor air temp and 35°C (95°F) db outdoor air temp.
3. All units comply with ASHRAE 90.1 Energy Standard for minimum EER and IEER requirements.

38AU

SOUND POWER LEVELS, dB

UNIT	COOLING STAGES	OUTDOOR SOUND (dB)								
		A–WEIGHTED	63	125	250	500	1000	2000	4000	8000
NOVATION – All Aluminum Coil Design										
38AUZ07	1	82	78.7	91.2	84.4	79.7	76.9	73.5	71.9	67.5
38AUZ08	1	81	81.7	89.7	82.6	77.6	74.4	70.3	68.0	64.2
38AUD12	2	78	79.2	81.1	78.4	75.0	72.9	68.2	66.4	68.2
38AUD14	2	79	76.2	78.6	78.1	75.1	75.2	71.4	67.9	65.1
38AUD16	2	80	90.3	81.8	78.0	76.7	75.2	70.5	66.4	61.9
RTPF – Round Tube/Plate Fin Coil Design										
38AUZ07	1	83	81.7	88.2	84.0	79.7	78.1	74.0	71.4	68.0
38AUZ08	1	83	81.7	88.2	84.0	79.7	78.1	74.0	71.4	68.0
38AUD12	2	80	76.0	79.9	79.8	77.4	75.6	69.8	67.8	66.4
38AUD16	2	83	86.7	81.2	78.9	80.4	78.0	74.2	70.2	65.0
38AUD25	2	85	91.0	85.0	80.0	86.0	79.0	73.0	68.0	63.0

NOTE: Outdoor sound data is measure in accordance with AHRI standard 270–2008.

LEGEND:

dB = Decibel

PHYSICAL DATA

SINGLE CIRCUIT MODELS with RTPF – Round Tube/Plate Fin Coil Design		
	38AUZ07	**38AUZ08**
Refrigeration System		
# Circuits / # Comp. / Type	1 / 1 / Scroll	1 / 1 / Scroll
R–410a shipping charge A/B (lbs, 50 Hz)	11	13
System charge w/ fan coil* (50 Hz)	14	17
Metering device	TXV	TXV
High–press. Trip / Reset (psig)	630 / 505	630 / 505
Low–press. Trip / Reset (psig)	54 / 117	54 / 117
Cond. Coil		
Material	Al/Cu	Al/Cu
Coil type	RTPF	RTPF
Rows / FPI	2 / 17	2 / 17
Total face area (ft2)	17.5	17.5
Cond. fan / motor		
Qty / Motor drive type	2 / direct	2 / direct
Motor HP / RPM	1/4 / 1100	1/4 / 1100
Fan diameter (in)	22	22
Nominal Airflow (cfm)	6000	6000
Watts (total)	610	610
Piping Connections		
Qty / Suction (in. ODS)	1 / 1 1/8	1 / 1 1/8
Qty / Liquid (in. ODS)	1 / 3/8	1 / 1/2

SINGLE CIRCUIT MODELS with NOVATION – All Aluminum coil Design		
	38AUZ07	**38AUZ08**
Refrigeration System		
# Circuits / # Comp. / Type	1 / 1 / Scroll	1 / 1 / Scroll
R–410a shipping charge A/B (lbs)	4.4	4.9
System charge w/ fan coil	8.4	10.2
System charge w/ fan coil (50hz)	9.0	12.3
Metering device	TXV	TXV
High–press. Trip / Reset (psig)	630 / 505	630 / 505
Low–press. Trip / Reset (psig)	54 / 117	54 / 117
Cond. Coil		
Material	Al	Al
Coil type	microchannel	microchannel
Rows / FPI	1 / 17	1 / 17
total face area (ft2)	17.5	20.5
Cond. fan / motor		
Qty / Motor drive type	2 / direct	2 / direct
Motor HP / RPM	1/4 / 1100	1/4 / 1100
Fan diameter (in)	22	22
Nominal Airflow (cfm)	6,000	6,000
Watts (total)	610	610

RTPF – Round tube /plate fin design

* Approximate system charge with about 25 ft piping of sizes indicated with matched 40RU.

PHYSICAL DATA (CONT)

38AU

DUAL CIRCUIT MODELS with RTPF – Round Tube/Plate Fin Coil Design			
	38AUD12	**38AUD16**	**38AUD25**
Refrigeration System			
# Circuits / # Comp. / Type	2 / 2 / Scroll	2 / 2 / Scroll	2 / 2 / Scroll
R–410a shipping charge A/B (lbs, 50 Hz)	8.0 / 8.0	16.0 / 16.0	14.0 / 14.0
System charge w/ fan coil* (50 Hz)	11.0 / 10.0	22.0 / 22.0	19.0 / 19.0
Metering device	TXV	TXV	TXV
High–press. Trip / Reset (psig)	630 / 505	630 / 505	630 / 505
Low–press. Trip / Reset (psig)	54 / 117	54 / 117	54 / 117
Compressor			
Model	ZP51 (2)	ZP83 (2)	ZP103 (2)
Oil Charge A/B (oz)	42 / 42	60 / 60	110 / 110
Speed rpm 50 Hz	2900	2900	2900
Cond. Coil			
Material	Al/Cu	Al/Cu	Al/Cu
Coil type	RTPF	RTPF	RTPF
Rows / FPI	2 / 17	2 / 17	2 / 17
Total face area (ft2)	25.1	23.5 x 2	25.0 x 2
Cond. fan / motor			
Qty / Motor drive type	2 / direct	3 / direct	4 / direct
Motor HP / RPM	1/4 / 1100	1/4 / 1100	1/4 / 1100
Fan diameter (in)	22	22	22
Nominal Airflow (cfm)	6000	9000	12000
Watts (total)	610	970	1150
Piping Connections			
Qty / Suction (in. ODS)	2 / 1 1/8	2 / 1 3/8	2 / 1 3/8
Qty / Liquid (in. ODS)	2 / 3/8	2 / 1/2	2 / 1/2

DUAL CIRCUIT MODELS with NOVATION – All Aluminum coil Design			
	38AUD12	**38AUD14**	**38AUD16**
Refrigeration System			
# Circuits / # Comp. / Type	2/2/Scroll	2/2/Scroll	2/2/Scroll
R–410a shipping charge A/B (lbs)	3.0 /3.1	3.7/3.9	6.1/6.1
System charge w/ fan coil	7.4 / 7.4	10.8 / 10.8	12.0/12.0
System charge w/ fan coil (50hz)	7.5 / 7.5	11.2 / 11.2	14.0 /14.0
Metering device	TXV	TXV	TXV
High–press. Trip / Reset (psig)	630 / 505	630 / 505	630 / 505
Low–press. Trip / Reset (psig)	54 / 117	54 / 117	54 / 117
Cond. Coil			
Material	Al	Al	Al
Coil type	microchannel	microchannel	microchannel
Rows / FPI	1 / 17	1 / 17	1 / 17
total face area (ft2)	25.0	31.8	25.0 x 2
Cond. fan / motor			
Qty / Motor drive type	2 / direct	2 / direct	3 / direct
Motor HP / RPM	1/4 / 1100	1/4 / 1100	1/4 / 1100
Fan diameter (in)	22	22	22
Nominal Airflow (cfm)	6,000	6,000	10,000
Watts (total)	610	610	970

RTPF – Round tube /plate fin design

* Approximate system charge with about 25 ft piping of sizes indicated with matched 40RU.

DIMENSIONS

UNIT	STD. UNIT WT.		CORNER A		CORNER B		CORNER C		CORNER D		CENTER OF GRAVITY			UNIT HEIGHT
	KG.	LBS.	KG.	LBS.	KG.	LBS.	KG.	LBS.	KG.	LBS.	X	Y	Z	H
38AUZ-07 (MCHX)	149	328	58	128	31	68	28	62	32	70	21 [533.4]	19 [482.6]	13 [330.2]	42-3/8 [1076.0]
38AUZ-08 (MCHX)	160	353	63	138	33	72	29	65	35	78	19 [482.6]	23 [584.2]	13 [330.2]	42-3/8 [1076.0]
38AUD-12 (MCHX)	226	499	88	193	50	111	38	72	56	123	20 [508.0]	23 [584.2]	15 [381.0]	50-3/8 [1279.2]
38AUD-14 (MCHX)	229	505	86	190	40	88	34	76	68	151	20 [508.0]	24 [609.6]	15 [381.0]	50-3/8 [1279.2]
38AUZ-07 (RTPF)	176	389	64	141	44	96	28	62	41	91	18 [457.2]	24 [609.6]	21 [533.4]	42-3/8 [1076.0]
38AUZ-08 (RTPF)	177	391	64	142	44	96	28	62	41	91	18 [457.2]	24 [609.6]	21 [533.4]	42-3/8 [1076.0]
38AUD-12 (RTPF)	234	516	84	185	53	117	38	83	59	131	19 [482.6]	23 [584.2]	24 [609.6]	50-3/8 [1279.2]

CG CENTER OF GRAVITY

DIRECTION OF AIR FLOW

DIMENSIONS IN [ ] ARE IN MM

SERVICE VALVE CONNECTIONS		
UNIT	SUCTION	LIQUID
38AUZ07	1-1/8 [28.6]	3/8 [9.5]
38AUZ08	1-1/8 [28.6]	1/2 [12.7]
38AUD12	1-1/8 [28.6]	3/8 [9.5]
38AUD14	1-3/8 [34.9]	1/2 [12.7]

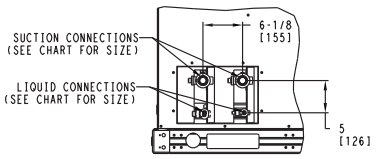

RIGHT SIDE VIEW
(FOR 38AUD SYSTEMS)

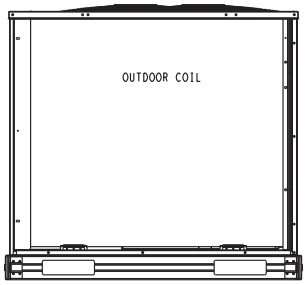

PLAN VIEW

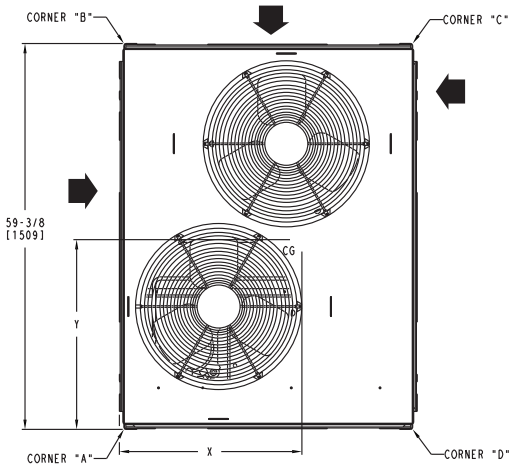

TOP VIEW

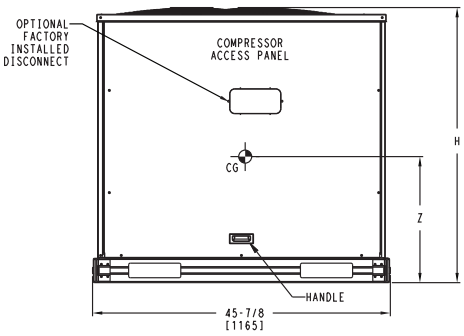

FRONT VIEW

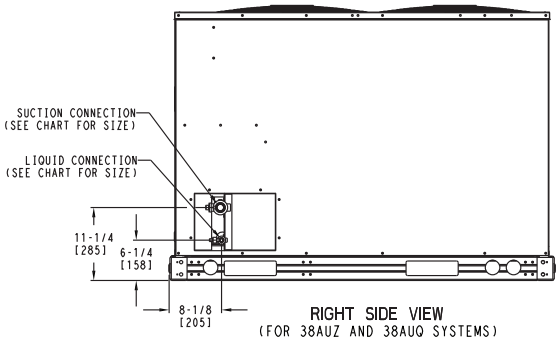

RIGHT SIDE VIEW
(FOR 38AUZ AND 38AUQ SYSTEMS)

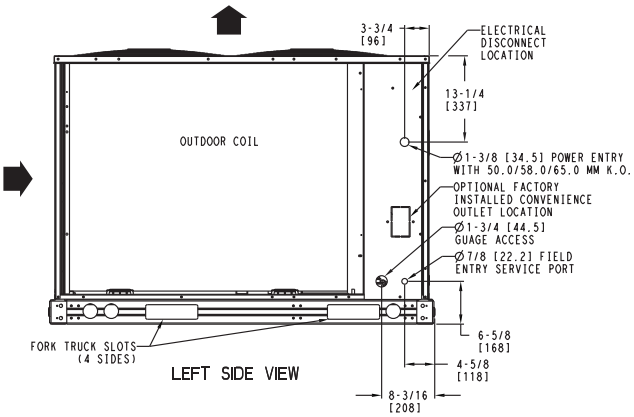

LEFT SIDE VIEW

NOTES:

1. MINIMUM CLEARANCE (LOCAL CODES OR JURISDICTION MAY PREVAIL):
   A. BOTTOM TO COMBUSTIBLE SURFACES: 0 INCHES.
   B. OUTDOOR COIL, FOR PROPER AIR FLOW: 36 INCHES ONE SIDE, 12 INCHES THE OTHER. THE SIDE GETTING THE GREATER CLEARANCE IS OPTIONAL.
   C. OVERHEAD: 60 INCHES, TO ASSURE PROPER OUTDOOR FAN OPERATION.
   D. BETWEEN UNITS: CONTROL BOX SIDE, 42 INCHES PER NEC.
   E. BETWEEN UNIT AND UNGROUNDED SURFACES: CONTROL BOX SIDE, 36 INCHES PER NEC.
   F. BETWEEN UNIT AND BLOCK OR CONCRETE WALLS AND OTHER GROUNDED SURFACES: CONTROL BOX SIDE, 42 INCHES PER NEC.
2. WITH EXCEPTION OF THE CLEARANCE FOR THE OUTDOOR COIL AS STATED IN NOTE 1B, A REMOVABLE FENCE OR BARRICADE REQUIRES NO CLEARANCE.
3. UNITS MAY BE INSTALLED ON COMBUSTIBLE FLOORS MADE FROM WOOD OR CLASS A, B OR C ROOF COVERING MATERIAL.

C10590

38AU

DIMENSIONS (cont.)

UNIT	STD. UNIT WT.		CORNER A		CORNER B		CORNER C		CORNER D		CENTER OF GRAVITY			UNIT HEIGHT
	KG.	LBS.	KG.	LBS.	KG.	LBS.	KG.	LBS.	KG.	LBS.	X	Y	Z	H
38AUD16 (MCHX)	288	633	100	220	61	134	61.5	135	65.5	144	38 [965.2]	19 [482.6]	15 [381]	50-3/8 [1279.2]
38AUD16 (RTPF)	332	731	107	237	78	172	61	135	84	186	38 [965.2]	19 [482.6]	17 [431.8]	50-3/8 [1279.2]

CG CENTER OF GRAVITY

DIRECTION OF AIR FLOW

DIMENSIONS IN [ ] ARE IN MM

SERVICE VALVE CONNECTIONS			QTY
UNIT	SUCTION	LIQUID	
38AUD16	1-3/8 [34.9]	1/2 [12.7]	2 EA

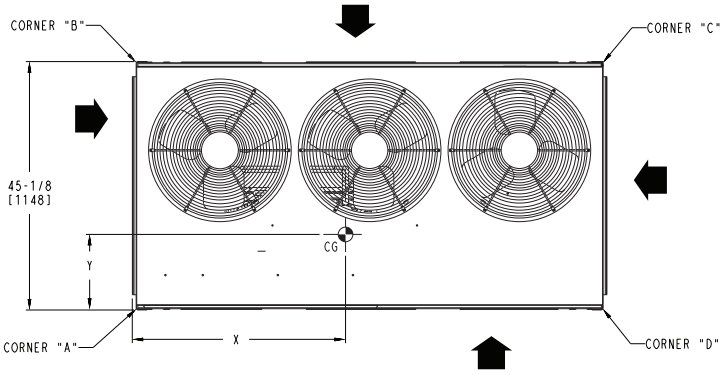

TOP VIEW

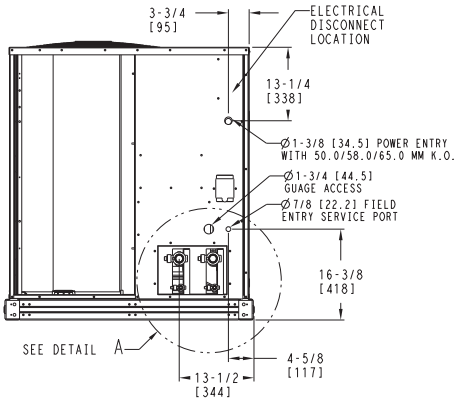

LEFT SIDE VIEW FOR 38AUD SYSTEMS

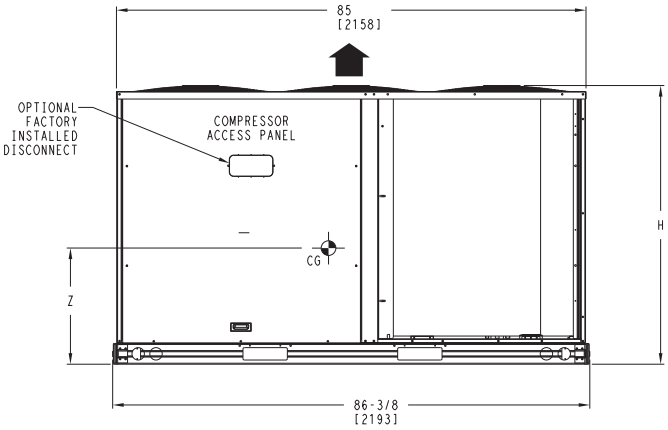

FRONT VIEW

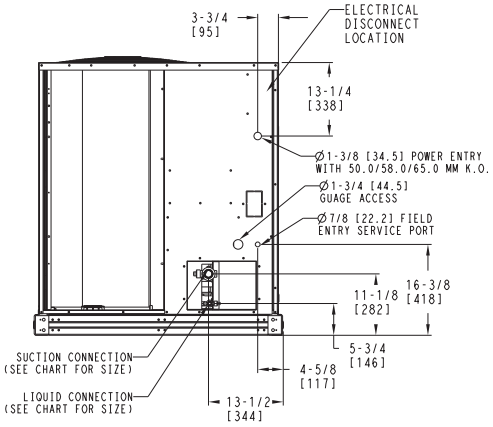

LEFT SIDE VIEW

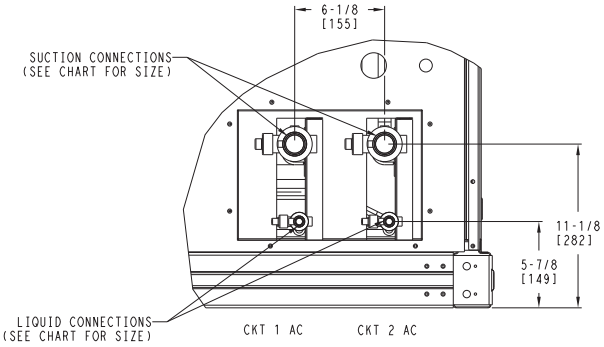

DETAIL A
(NOTE POSITION OF CKT 1)

NOTES:
1. MINIMUM CLEARANCE (LOCAL CODES OR JURISDICTION MAY PREVAIL):
   A. BOTTOM TO COMBUSTIBLE SURFACES: 0 INCHES.
   B. OUTDOOR COIL, FOR PROPER AIR FLOW: 36 INCHES ONE SIDE, 12 INCHES THE OTHER. THE SIDE GETTING THE GREATER CLEARANCE IS OPTIONAL.
   C. OVERHEAD: 60 INCHES, TO ASSURE PROPER OUTDOOR FAN OPERATION.
   D. BETWEEN UNITS: CONTROL BOX SIDE, 42 INCHES PER NEC.
   E. BETWEEN UNIT AND UNGROUNDED SURFACES: CONTROL BOX SIDE, 36 INCHES PER NEC.
   F. BETWEEN UNIT AND BLOCK OR CONCRETE WALLS AND OTHER GROUNDED SURFACES: CONTROL BOX SIDE, 42 INCHES PER NEC.
2. WITH EXCEPTION OF THE CLEARANCE FOR THE OUTDOOR COIL AS STATED IN NOTE 1B, A REMOVABLE FENCE OR BARRICADE REQUIRES NO CLEARANCE.
3. UNITS MAY BE INSTALLED ON COMBUSTIBLE FLOORS MADE FROM WOOD OR CLASS A, B OR C ROOF COVERING MATERIAL.

C10591

DIMENSIONS (cont.)

UNIT	STD. UNIT WT.		CORNER A		CORNER B		CORNER C		CORNER D		CENTER OF GRAVITY			UNIT HEIGHT
	KG.	LBS.	KG.	LBS.	KG.	LBS.	KG.	LBS.	KG.	LBS.	X	Y	Z	H
38AUD25 (RTPF)	444	978	163	360	85	188	67	147	128	283	38 [965.2]	23 [584.2]	17 [431.8]	50-3/8 [1279.2]

CG CENTER OF GRAVITY

DIRECTION OF AIR FLOW

DIMENSIONS IN [ ] ARE IN MM

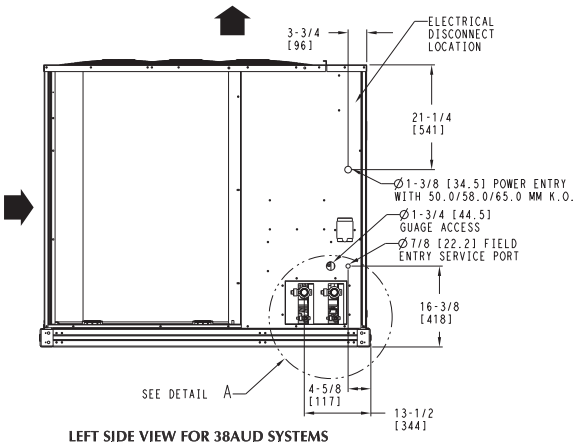

LEFT SIDE VIEW FOR 38AUD SYSTEMS

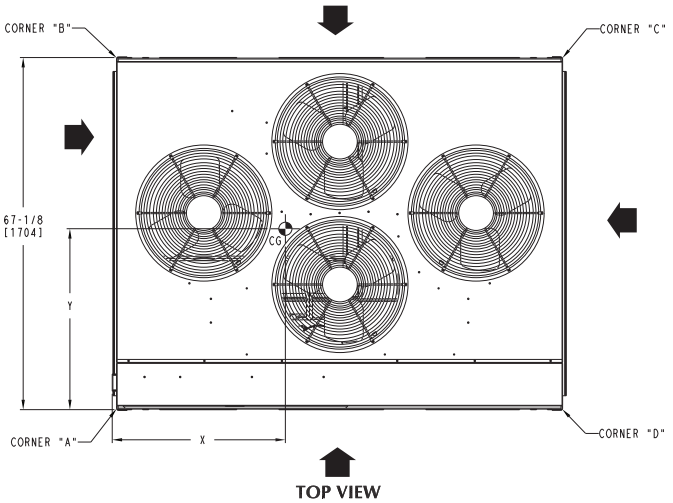

TOP VIEW

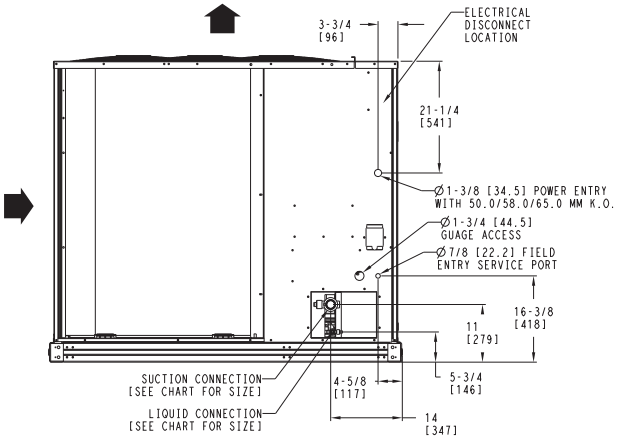

LEFT SIDE VIEW

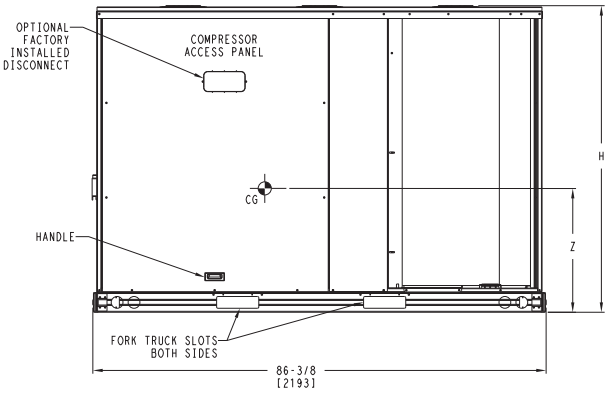

FRONT VIEW

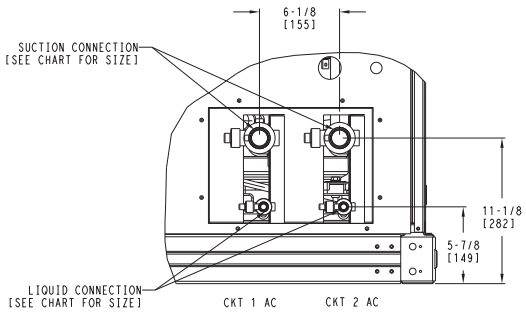

DETAIL A
(NOTE POSITION OF CKT 1)

NOTES:
1. MINIMUM CLEARANCE (LOCAL CODES OR JURISDICTION MAY PREVAIL):
   A. BOTTOM TO COMBUSTIBLE SURFACES: 0 INCHES.
   B. OUTDOOR COIL, FOR PROPER AIR FLOW: 36 INCHES ONE SIDE, 12 INCHES THE OTHER. THE SIDE GETTING THE GREATER CLEARANCE IS OPTIONAL.
   C. OVERHEAD: 60 INCHES, TO ASSURE PROPER OUTDOOR FAN OPERATION.
   D. BETWEEN UNITS: CONTROL BOX SIDE, 42 INCHES PER NEC.
   E. BETWEEN UNIT AND UNGROUNDED SURFACES: CONTROL BOX SIDE, 36 INCHES PER NEC.
   F. BETWEEN UNIT AND BLOCK OR CONCRETE WALLS AND OTHER GROUNDED SURFACES: CONTROL BOX SIDE, 42 INCHES PER NEC.
2. WITH EXCEPTION OF THE CLEARANCE FOR THE OUTDOOR COIL AS STATED IN NOTE 1B, A REMOVABLE FENCE OR BARRICADE REQUIRES NO CLEARANCE.
3. UNITS MAY BE INSTALLED ON COMBUSTIBLE FLOORS MADE FROM WOOD OR CLASS A, B OR C ROOF COVERING MATERIAL.

SERVICE VALVE CONNECTIONS			QTY
UNIT	SUCTION	LIQUID	
38AUD25	1-3/8 [34.9]	1/2 [12.7]	2 EA

C10592

38AU

OPTIONS AND ACCESSORIES

38AUZ/D OPTIONS AND ACCESSORIES

ITEM	OPTION*	ACCESSORY†
Disconnect Switch (non-fused)	X	
Special–coated Coil Protection	X	
Low Ambient Temperature MotorMaster I® Control	X	X
Wired Condenser Coil Grille (Novation 07–14 models only)		X
Louvered Hail Guard	X	X
Programmable Thermostats		X

* Factory-installed option.
† Field-installed accessory.

38AUZ/38AUD factory-installed options

E-coated aluminum-fin coils have a flexible and durable epoxy coating uniformly applied to all coil surfaces. Unlike brittle phenolic dip and bake coatings, E-coating provides superior protection with unmatched flexibility, edge coverage, metal adhesion, thermal performance, and most importantly, corrosion resistance.

E-coated coils provide this protection since all coil surfaces are completely encapsulated from environmental contamination. This coating is especially suitable in industrial environments.

Pre-coated coils (RTPF coils only) provide protection in mild coastal environments.

–29°C (–20°F) low-ambient temperature kit option (MotorMaster I®) controls outdoor-fan motor operation to maintain the correct head pressure at low outdoor ambient temperatures.

Louvered hail guard package protects coils against damage from flying debris and hail.

Non-fused disconnect switch is used to remove power locally at the condensing unit. This switch also includes a power lockout capability to protect the service person. This lockout switch saves the service person time and effort because there is no need to access a distant disconnect switch while servicing the unit.

NOTE: Non-fused disconnect switch cannot be used when unit MOCP electrical rating exceeds 80 amps.

38AUZ/D field-installed accessories

–29°C (–20°F) low-ambient temperature kit accessory (MotorMaster I®) controls outdoor-fan motor operation to maintain the correct head pressure at low outdoor ambient temperatures.

Louvered hail guard package protects coils against damage from flying debris and hail.

Condenser coil grille package protects condensing unit coil from impact by large objects and vandalism.

Carrier's line of thermostats provide both programmable and non-programmable capability with the new **Debonair®** line of commercial programmable thermostats. The **Commercial Electronic** thermostats provide 7-day programmable capability for economical applications.

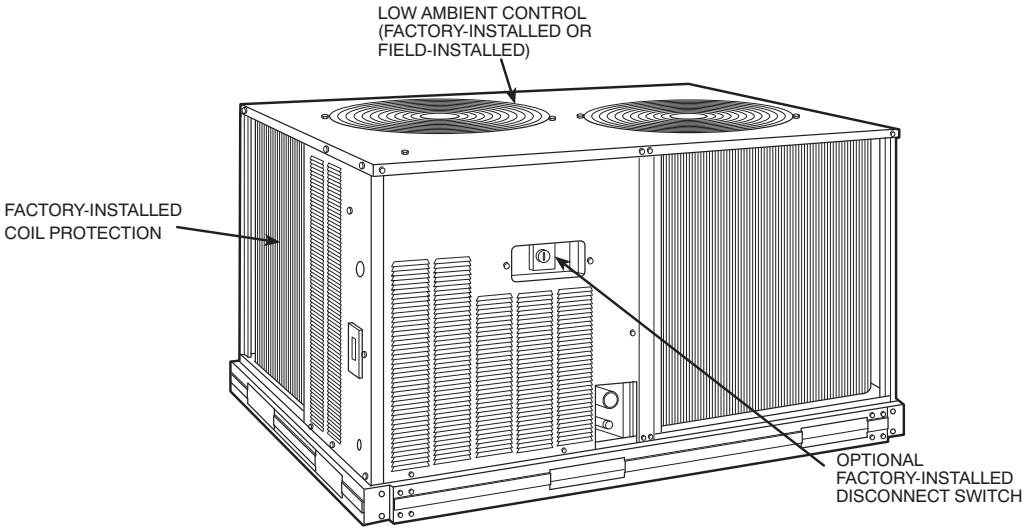

C10609

40RU OPTIONS AND ACCESSORIES

ITEM	OPTION*	ACCESSORY†
Alternate Fan Motors	X	
Alternate Drives	X	
CO_2 Sensors		X
Condensate Drain Trap		X
Discharge Plenum		X
Economizer		X
Electric Heat		X
Hot Water Heating Coils		X
Overhead Suspension Package		X
Prepainted Units	X	
Return Air Grille		X
Steam Heating Coil		X
Subbase		X

* Factory-installed option.
† Field-installed accessory.

40RU factory-installed options

Alternate fan motors and drives are available to provide the widest possible range of performance.

Units constructed of prepainted steel are available from the factory for applications that require painted units. Unit color is American Sterling Gray.

40RU field-installed accessories

Two-row hot water coils have $^5/_8$-in. diameter copper tubes mechanically bonded to aluminum plate fins. Coils have non-ferrous headers.

One-row steam coil has 1-in. OD copper tube and aluminum fins. The Inner Distributing Tube (IDT) design provides uniform temperatures across the coil face. The IDT steam coils are especially suited to applications where sub-freezing air enters the unit.

Electric resistance heat coils have an open-wire design and are mounted in a rigid frame. Safety cutouts for high temperature conditions are standard.

Economizer (enthalpy controlled) provides ventilation air and provides “free” cooling if the outside ambient temperature and humidity are suitable. The economizer can also be used in conjunction with Carrier Comfort System thermostats and CO_2 sensors to help meet indoor air quality requirements. The economizer can be used in both vertical and horizontal positions.

Discharge plenum directs the air discharge into the occupied space; integral horizontal and vertical louvers enable redirection of airflow. This accessory is available unpainted or painted.

Return-air grille provides a protective barrier over the return-air opening and gives a finished appearance to units installed in the occupied space. This accessory is available unpainted or painted.

Subbase provides a stable, raised platform and room for condensate drain connection for floor-mounted units. This accessory is available unpainted or painted.

Overhead suspension package includes necessary brackets to support units in horizontal installations.

CO_2 sensors can be used in conjunction with the economizer accessory to help meet indoor air quality requirements. The sensor signals the economizer to open when the CO_2 level in the space exceeds the setpoint. A Carrier Comfort System programmable thermostat can also be used to override the sensor if the outside-air temperature is too high or too low.

Condensate drain trap includes an overflow shutoff switch that can be wired to turn off the unit if the trap becomes plugged. The kit also includes a wire harness that can be connected to an alarm if desired. The transparent trap is designed for easy service and maintenance.

OPTIONS AND ACCESSORIES (cont.)

40RU WITH DISCHARGE PLENUM RETURN-AIR GRILLE AND SUBBASE

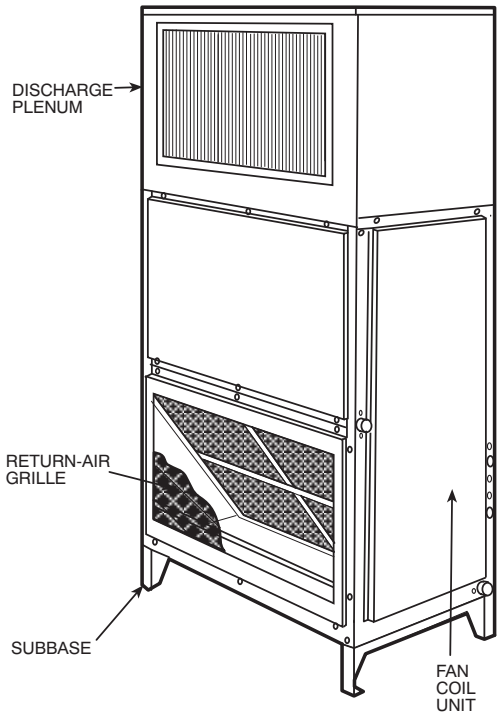

40RU WITH HOT WATER OR STEAM COIL

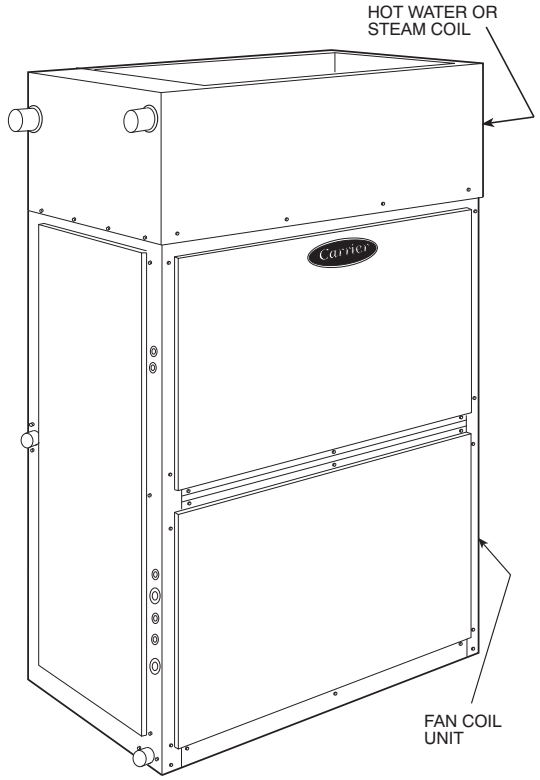

40RU WITH ECONOMIZER

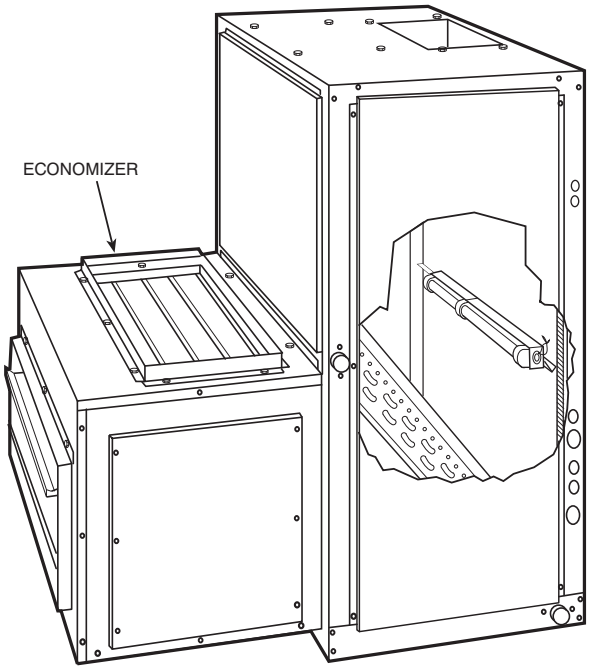

40RU WITH CONDENSATE TRAP

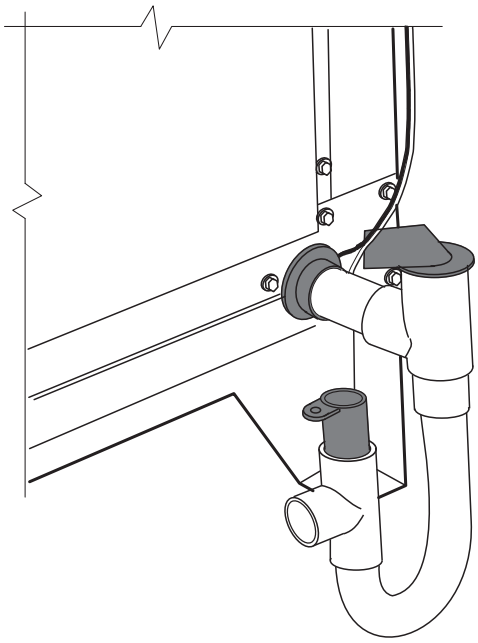

C10610

TYPICAL WIRING SCHEMATIC

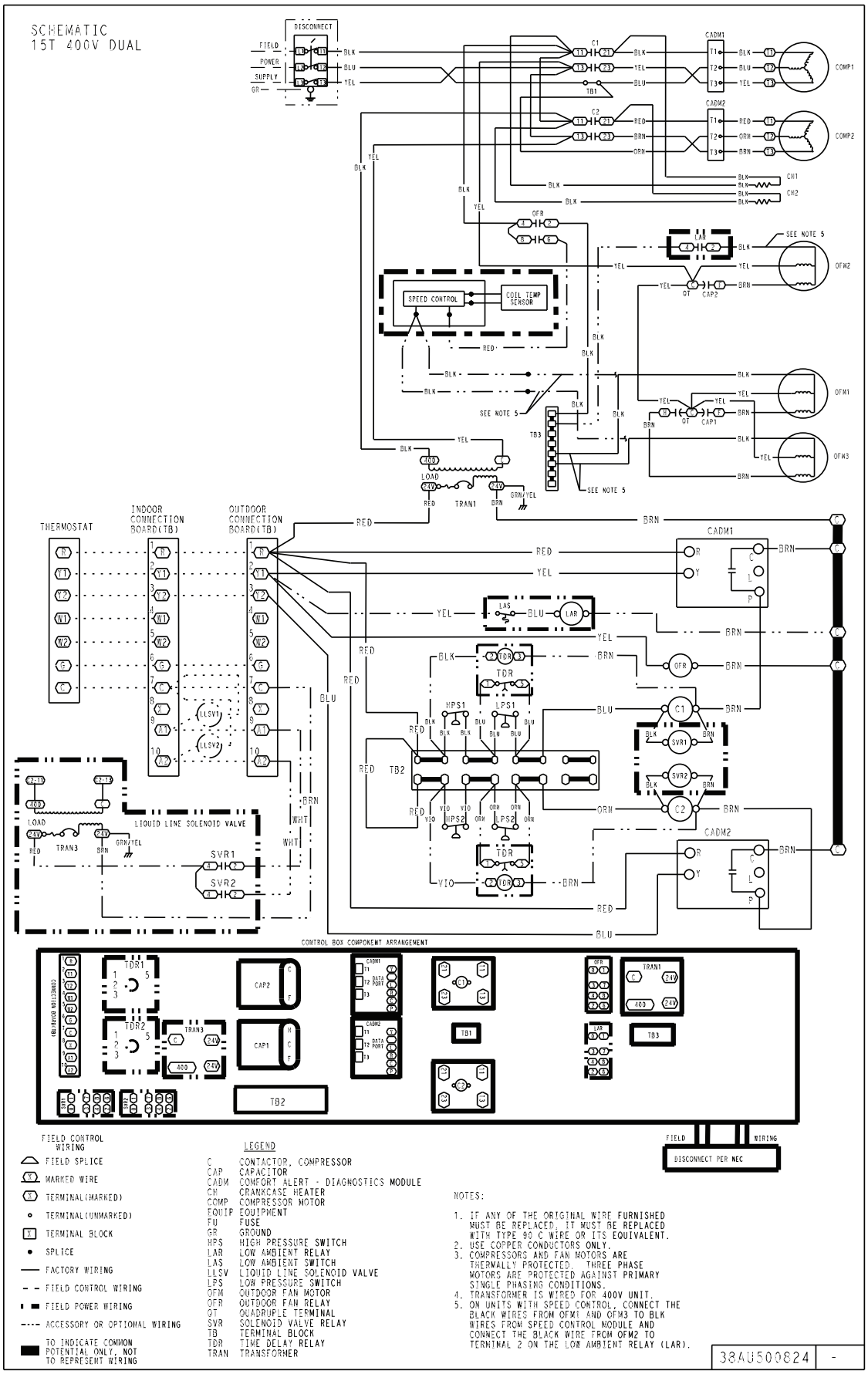

Typical 38AUD16 Dual Circuit

38AU

Appendix D

RCNM Calculations

Roadway Construction Noise Model (RCNM),Version 1.1

Report date: 1/16/2024
Case Description: Garvey Reservoir - Phase 1 - I/O Tower Demolition

				---- Receptor #1 ----
		Baselines (dBA)		
Description	Land Use	Daytime	Evening	Night
Residential	Residential	80	80	80

			Equipment			
			Spec	Actual	Receptor	Estimated
	Impact		Lmax	Lmax	Distance	Shielding
Description	Device	Usage(%)	(dBA)	(dBA)	(feet)	(dBA)
Backhoe	No	40		77.6	675	0
Backhoe	No	40		77.6	675	0
Drill Rig Truck	No	20		79.1	675	0
Compressor (air)	No	40		77.7	675	0
Compressor (air)	No	40		77.7	675	0
Compressor (air)	No	40		77.7	675	0
Compressor (air)	No	40		77.7	675	0
Compressor (air)	No	40		77.7	675	0
Dozer	No	40		81.7	675	0
Dozer	No	40		81.7	675	0
Excavator	No	40		80.7	675	0
Excavator	No	40		80.7	675	0
Front End Loader	No	40		79.1	675	0
Front End Loader	No	40		79.1	675	0
Front End Loader	No	40		79.1	675	0
Front End Loader	No	40		79.1	675	0

			Results				
	Calculated (dBA)			Noise Limits (dBA)			
			Day		Evening		Night
Equipment	*Lmax	Leq	Lmax	Leq	Lmax	Leq	Lmax
Backhoe	55	51	N/A	N/A	N/A	N/A	N/A
Backhoe	55	51	N/A	N/A	N/A	N/A	N/A
Drill Rig Truck	56.5	49.5	N/A	N/A	N/A	N/A	N/A
Compressor (air)	55.1	51.1	N/A	N/A	N/A	N/A	N/A
Compressor (air)	55.1	51.1	N/A	N/A	N/A	N/A	N/A
Compressor (air)	55.1	51.1	N/A	N/A	N/A	N/A	N/A
Compressor (air)	55.1	51.1	N/A	N/A	N/A	N/A	N/A
Compressor (air)	55.1	51.1	N/A	N/A	N/A	N/A	N/A
Dozer	59.1	55.1	N/A	N/A	N/A	N/A	N/A
Dozer	59.1	55.1	N/A	N/A	N/A	N/A	N/A
Excavator	58.1	54.1	N/A	N/A	N/A	N/A	N/A
Excavator	58.1	54.1	N/A	N/A	N/A	N/A	N/A

Front End Loader		56.5	52.5	N/A	N/A	N/A	N/A	N/A
Front End Loader		56.5	52.5	N/A	N/A	N/A	N/A	N/A
Front End Loader		56.5	52.5	N/A	N/A	N/A	N/A	N/A
Front End Loader		56.5	52.5	N/A	N/A	N/A	N/A	N/A
	Total	59.1	64.6	N/A	N/A	N/A	N/A	N/A

*Calculated Lmax is the Loudest value.

Roadway Construction Noise Model (RCNM),Version 1.1

Report date: 1/16/2024
Case Description: Garvey Reservoir - Phase 1 - Reservoir Cover Demolition

---- Receptor #1 ----

Description	Land Use	Baselines (dBA) Daytime	Evening	Night
Residential	Residential	80	80	80

Description	Impact Device	Usage(%)	Equipment Spec Lmax (dBA)	Actual Lmax (dBA)	Receptor Distance (feet)	Estimated Shielding (dBA)
Generator	No	50		80.6	425	0
Generator	No	50		80.6	425	0
Generator	No	50		80.6	425	0
Front End Loader	No	40		79.1	425	0
Compressor (air)	No	40		77.7	425	0
Compressor (air)	No	40		77.7	425	0
Compressor (air)	No	40		77.7	425	0
Compressor (air)	No	40		77.7	425	0
Front End Loader	No	40		79.1	425	0
Front End Loader	No	40		79.1	425	0
Vacuum Street Sweeper	No	10		81.6	425	0

Equipment	Calculated (dBA) *Lmax	Leq	Results Noise Limits (dBA) Day Lmax	Day Leq	Evening Lmax	Evening Leq	Night Lmax
Generator	62	59	N/A	N/A	N/A	N/A	N/A
Generator	62	59	N/A	N/A	N/A	N/A	N/A
Generator	62	59	N/A	N/A	N/A	N/A	N/A
Front End Loader	60.5	56.5	N/A	N/A	N/A	N/A	N/A
Compressor (air)	59.1	55.1	N/A	N/A	N/A	N/A	N/A
Compressor (air)	59.1	55.1	N/A	N/A	N/A	N/A	N/A
Compressor (air)	59.1	55.1	N/A	N/A	N/A	N/A	N/A
Compressor (air)	59.1	55.1	N/A	N/A	N/A	N/A	N/A
Front End Loader	60.5	56.5	N/A	N/A	N/A	N/A	N/A
Front End Loader	60.5	56.5	N/A	N/A	N/A	N/A	N/A
Vacuum Street Sweeper	63	53	N/A	N/A	N/A	N/A	N/A
Total	63	67.2	N/A	N/A	N/A	N/A	N/A

*Calculated Lmax is the Loudest value.

Roadway Construction Noise Model (RCNM),Version 1.1

Report date: 1/16/2024

Case Description: Garvey Reservoir Phase 1/2 - Surge Tank Infrastructure Installation

---- Receptor #1 ----

Description	Land Use	Baselines (dBA) Daytime	Evening	Night
Residential	Residential	80	80	80

Equipment

Description	Impact Device	Usage(%)	Spec Lmax (dBA)	Actual Lmax (dBA)	Receptor Distance (feet)	Estimated Shielding (dBA)
Generator	No	50		80.6	500	0
Generator	No	50		80.6	500	0
Generator	No	50		80.6	500	0
Crane	No	16		80.6	500	0
Compressor (air)	No	40		77.7	500	0
Compressor (air)	No	40		77.7	500	0
Front End Loader	No	40		79.1	500	0
Vacuum Street Sweeper	No	10		81.6	500	0

Results

	Calculated (dBA)		Noise Limits (dBA)				
			Day		Evening		Night
Equipment	*Lmax	Leq	Lmax	Leq	Lmax	Leq	Lmax
Generator	60.6	57.6	N/A	N/A	N/A	N/A	N/A
Generator	60.6	57.6	N/A	N/A	N/A	N/A	N/A
Generator	60.6	57.6	N/A	N/A	N/A	N/A	N/A
Crane	60.6	52.6	N/A	N/A	N/A	N/A	N/A
Compressor (air)	57.7	53.7	N/A	N/A	N/A	N/A	N/A
Compressor (air)	57.7	53.7	N/A	N/A	N/A	N/A	N/A
Front End Loader	59.1	55.1	N/A	N/A	N/A	N/A	N/A
Vacuum Street Sweeper	61.6	51.6	N/A	N/A	N/A	N/A	N/A
Total	61.6	64.6	N/A	N/A	N/A	N/A	N/A

*Calculated Lmax is the Loudest value.

Roadway Construction Noise Model (RCNM),Version 1.1

Report date: 1/16/2024
Case Description: Garvey Reservoir Phase 2 - Junction Structure Infrastructure Installation

---- Receptor #1 ----

Description	Land Use	Baselines (dBA) Daytime	Evening	Night
Residential	Residential	80	80	80

Description	Impact Device	Usage(%)	Equipment Spec Lmax (dBA)	Actual Lmax (dBA)	Receptor Distance (feet)	Estimated Shielding (dBA)
Generator	No	50		80.6	90	0
Generator	No	50		80.6	90	0
Generator	No	50		80.6	90	0
Crane	No	16		80.6	90	0
Compressor (air)	No	40		77.7	90	0
Compressor (air)	No	40		77.7	90	0
Compressor (air)	No	40		77.7	90	0
Welder / Torch	No	40		74	90	0

Results

	Calculated (dBA)		Noise Limits (dBA)				
			Day		Evening		Night
Equipment	*Lmax	Leq	Lmax	Leq	Lmax	Leq	Lmax
Generator	75.5	72.5	N/A	N/A	N/A	N/A	N/A
Generator	75.5	72.5	N/A	N/A	N/A	N/A	N/A
Generator	75.5	72.5	N/A	N/A	N/A	N/A	N/A
Crane	75.4	67.5	N/A	N/A	N/A	N/A	N/A
Compressor (air)	72.6	68.6	N/A	N/A	N/A	N/A	N/A
Compressor (air)	72.6	68.6	N/A	N/A	N/A	N/A	N/A
Compressor (air)	72.6	68.6	N/A	N/A	N/A	N/A	N/A
Welder / Torch	68.9	64.9	N/A	N/A	N/A	N/A	N/A
Total	75.5	79.2	N/A	N/A	N/A	N/A	N/A

*Calculated Lmax is the Loudest value.

Roadway Construction Noise Model (RCNM),Version 1.1

Report date: 2/28/2024
Case Description: Garvey Reservoir Phase 3 - Pump Station Infrastructure Installation

				---- Receptor #1 ----
		Baselines (dBA)		
Description	Land Use	Daytime	Evening	Night
Residential	Residential	80	80	80

			Equipment			
			Spec	Actual	Receptor	Estimated
	Impact		Lmax	Lmax	Distance	Shielding
Description	Device	Usage(%)	(dBA)	(dBA)	(feet)	(dBA)
Generator	No	50		80.6	90	0
Generator	No	50		80.6	90	0
Generator	No	50		80.6	90	0
Front End Loader	No	40		79.1	90	0

			Results				
	Calculated (dBA)			Noise Limits (dBA)			
			Day		Evening		Night
Equipment	*Lmax	Leq	Lmax	Leq	Lmax	Leq	Lmax
Generator	75.5	72.5	N/A	N/A	N/A	N/A	N/A
Generator	75.5	72.5	N/A	N/A	N/A	N/A	N/A
Generator	75.5	72.5	N/A	N/A	N/A	N/A	N/A
Front End Loader	74	70	N/A	N/A	N/A	N/A	N/A
Total	75.5	78	N/A	N/A	N/A	N/A	N/A

*Calculated Lmax is the Loudest value.

Appendix D

Transportation Assessment

FEHR PEERS

Memorandum

Date: April 15, 2024

To: Annaliese Torres, Rincon Consultants, Inc.

From: Netai Basu & Andrew Jarnagin, Fehr & Peers

Subject: Garvey Reservoir Rehabilitation Project Transportation Assessment

LA21-3324

Project Description

The Garvey Reservoir Rehabilitation Project (herein referred to as "Project") involves rehabilitation of various existing components, as well as new construction, at The Metropolitan Water District of Southern California's (Metropolitan) Garvey Reservoir located at 1061 South Orange Avenue in Monterey Park, CA. The components of the Project are detailed below:

- Reservoir Cover and Liner: The inlet/outlet (I/O) tower float assembly would be redesigned; the reservoir's floating cover and liner would be replaced; the drainage system would be repaired or upgraded; the leak detection and monitoring system would be upgraded; and start-up testing procedures would be completed.
- I/O Tower: The I/O tower at the east end of the reservoir and its access bridge would be seismically rehabilitated and enhanced with lighting and equipment upgrades.
- Junction Structure: Five valves would be replaced in the junction structure to improve reliability.
- Facility Electrical System: The facility electrical system, including instrumentation at the Project site, would be upgraded or redesigned, and certain elements would be replaced.
- Standby Generator: The standby generator and its appurtenant electrical system would be replaced.
- Surge Tank Telemetry: Telemetry equipment associated with the surge tank would be improved, and the pressure switches and automated tank controls would be upgraded.
- Administration Building and Water Quality Laboratory: The existing Water Quality Laboratory would be relocated to the Administration Building, and vice versa, and the interior of the Water Quality Laboratory would be upgraded and rehabilitated. Upgrades would be made to the existing restroom and the parking spaces would be made to meet Americans with Disabilities Act and California Building Code requirements. A retaining wall would be reconstructed, and upgrades would be made to the heating, ventilation, and air conditioning system, water heater, and safety features.

- Proposed Pump Station: A new pump station would be constructed adjacent to South Orange Avenue.
- Miscellaneous Site Upgrades: Many smaller site components may be repaired or rehabilitated, including the following:
    - Upgrades to the ammonia feed system
    - Repaving or repairing existing reservoir roads
    - Replacement of chain link fencing with an ornamental steel fence
    - Replacement of gates within property and along the perimeter
    - Improvements to the slopes behind the Administration Building and Water Quality Laboratory to reduce stormwater runoff flows
    - Drainage improvements, landscaping, tree trimming, and/or tree and vegetation removal
    - Replacement of security cameras and gate access/intercom
    - Installation of security motion-activated lighting by the Administration Building and Water Quality Laboratory

Project construction is divided into three phases. Phase 1 includes work on the reservoir cover/liner and I/O tower and is planned to occur between September 2025 and December 2027. Phase 2 includes work on the junction structure and is planned to occur between September 2025 and December 2027. The activities in Phases 1 and 2 are all planned to occur within this 28-month period, but they would not occur concurrently. In particular, work on the junction structure cannot occur while the reservoir is out of service. Upgrades to the facility electrical system, standby generator, surge tank telemetry, Administration Building, Water Quality Laboratory, and miscellaneous site upgrades would take place over both Phases 1 and 2. Phase 3 involves construction of the new pump station and is planned to occur over approximately 18 months from January 2034 to June 2035.

The Project includes replacement of existing fencing along the property's frontage on South Orange Avenue. No lane closures would be required for this work. Temporary sidewalk closure along the southbound side of South Orange Avenue may be required for a duration of approximately two weeks.

All Project construction would take place within the City of Monterey Park's permitted construction hours of 7:00 AM-7:00 PM on weekdays and 9:00 AM-6:00 PM on Saturdays. Metropolitan's standard shifts are 7:00 AM-3:00 PM on weekdays. Saturday work would only be authorized in limited circumstances.

Operations and maintenance activities at Garvey Reservoir, including the frequency of staff visits, would be similar to existing conditions once construction activities are completed. The proposed pump station would be an unmanned structure, and any operations or maintenance to the facility would be completed using existing Metropolitan staff.

Project Site Access

Fehr & Peers staff visited the Garvey Reservoir site vicinity in February 2024 and confirmed that three driveways along South Orange Avenue are used for site access. The northern driveway is the main point of access and leads directly onto the internal circulation road. It is secured with a card access control system. The middle and southern driveways, which are secured with padlocks, lead into a paved parking area where several support facilities (e.g., Administration Building, Water Quality Laboratory, junction structure, sodium hypochlorite tank farm) are located. The support facilities and internal circulation road can be accessed via any of the three driveways, and all three driveways would be used for construction access. Metropolitan would determine which gates would be used for ingress and egress, in coordination with the City of Monterey Park. Pursuant to Metropolitan's standard practices, Metropolitan would require its construction contractor(s) to develop a comprehensive traffic management plan that would define work hours and haul hours, identify construction worker parking areas, define haul routes in coordination with the City of Monterey Park, and identify the times and locations adjacent to the site where flaggers should be present.

Current parking capacity on the reservoir facility grounds is approximately 50 spaces. Parking capacity would be temporarily reduced if some parking areas are used for materials storage and/or staging during construction. In particular, during a three-month period in Phase 1 when the replacement reservoir cover/liner would be stored on-site prior to installation, an off-site location would be found for temporary use as parking, if necessary, and workers would be required to carpool or use a shuttle to access the Project site.

Project Trip Generation

As described above, construction of the Project is planned to take place over three phases, with Phases 1 and 2 occurring over a period of 28 months and Phase 3 occurring over a period of 18 months.

Table 1 shows the estimated number of construction workers per Project phase, which was provided by Rincon Consultants, Inc., who developed the estimate using the methodology of the California Emissions Estimator Model and information provided by Metropolitan staff regarding anticipated construction equipment usage. The California Emissions Estimator Model quantifies construction worker estimates by multiplying the number of pieces of equipment used in each phase of construction by 1.25.[1]

[1] California Air Pollution Control Officers Association. 2022. California Emissions Estimator Model User's Guide Version 2022.1 – Appendix C. April 2022.

Table 1: Estimated Daily Construction Workers by Phase

Activity		Phase 1	Phase 2	Phase 3
Reservoir Cover and Liner I/O Tower	Average	15	-	-
	Peak	38	-	-
Junction Structure	Average	-	10	-
	Peak	-	13	-
Facility Electrical System, Standby Generator, Surge Tank Telemetry, Administration Building and Water Quality Laboratory, Miscellaneous Site Upgrades	Average	5	-	-
	Peak	12	-	-
Pump Station	Average	-	-	3
	Peak	-	-	5
Maximum	Average	20	15	3
	Peak	50	25	5

Source: Rincon Consultants, Inc. 2024. Response to Fehr & Peers Initial Information Request for the Metropolitan Water District Garvey Reservoir Transportation Impact Analysis.

The construction worker estimates were used to calculate construction worker trips, presented in **Table 2**, using a conservative, industry-standard assumption that each worker commutes in a separate single-occupancy vehicle and makes one round trip per day. As shown in **Table 2**, daily construction worker trips would be highest during Phase 1 with an average number of construction worker trips per day of 40 and a peak number of construction workers per day of 100.

Table 2: Estimated Daily Construction Worker Trips by Phase*

Activity		Phase 1	Phase 2	Phase 3
Reservoir Cover and Liner I/O Tower	Average	30	-	-
	Peak	76	-	-
Junction Structure	Average	-	20	-
	Peak	-	26	-
Facility Electrical System Standby Generator Surge Tank Telemetry Administration Building and Water Quality Laboratory Miscellaneous Site Upgrades	Average	10	-	-
	Peak	24	-	-
Pump Station	Average	-	-	6
	Peak	-	-	10
Maximum	Average	40	30	6
	Peak	100	50	10

* These estimates assume that each worker commutes in a single-occupancy vehicle and makes one round trip per day.

In addition to construction workers, delivery and haul truck trips are expected for export of soil and demolition debris and delivery of construction materials. Haul trucks would transport soil and demolition debris to either the Puente Hills Materials Recovery Facility at 13130 Crossroads Parkway South in the City of Industry, or the Waste Management Azusa Land Reclamation site at 1121 West Gladstone Street in Azusa. **Table 3** shows the estimated number of truck trips per Project phase, which is based on information provided by Metropolitan staff. Haul trips would only occur during soil export and demolition debris removal activities and are represented as a peak trip estimate. Delivery truck trips would occur more regularly, and often on a daily basis during construction; therefore, delivery truck estimates are presented as a daily average through the duration of each phase.

Table 3: Estimated Daily Truck Trips by Phase

Phase	Peak Soil Export/Demolition Debris Haul Truck Trips per Day	Average Delivery Truck Trips per Day
Phase 1	24*	4
Phase 2	10**	4
Phase 3	4	4

Source: Metropolitan 2024.
*Based on assumption that peak soil export and demolition debris export activities take place simultaneously.
**Based on 45 two-way total Phase 2 haul trips for demolition debris.

Haul Routes

As indicated by Metropolitan staff, planned receiving landfill sites are the Waste Management Landfill in Azusa and the Puente Hills Materials Recovery Facility in the City of Industry. The haul route for the Waste Management Landfill would likely proceed north from the Project site toward the San Bernardino Freeway (Interstate 10) via Graves Avenue and New Avenue, thus avoiding Hillcrest Elementary School located directly east of the reservoir across South Orange Avenue. The haul route for the Puente Hills Materials Recovery Facility would likely proceed south from the Project site to the Pomona Freeway (State Route 60) via Saturn Street and Potrero Grande Drive. The routes are the same for both the inbound and outbound directions. Maps showing the designated truck routes in Monterey Park and Rosemead are provided in **Attachment A**. The final haul routes would be determined during the traffic control plan process and with input from the City of Monterey Park closer to the time of construction.

Project Vehicle Miles Traveled (VMT) Screening Analyses

Senate Bill 743 tasked the Governor's Office of Planning and Research (OPR) with developing new guidelines for evaluating transportation impacts under the California Environmental Quality Act (CEQA) using methods that no longer focus on measuring automobile delay and level of service. Senate Bill 743 directed lead agencies to revise analysis of transportation impacts to include a metric that promotes reducing greenhouse gas emissions, developing multimodal transportation networks, and enabling access to diverse land uses. The California Natural Resources Agency certified and adopted the updated CEQA Guidelines implementing Senate Bill 743 (CEQA Guidelines Section 15064.3) in December 2018, and these guidelines are now in effect. These guidelines established VMT as the primary metric for evaluating a project's impacts on the environment and transportation system.

Metropolitan is the lead agency for the Project under the California Environmental Quality Act (CEQA). The CEQA Guidelines Appendix G Checklist Section XVII, threshold (b) requires an

evaluation of whether a project would conflict with or be inconsistent with CEQA Guidelines Section 15064.3(b). Because Metropolitan has not adopted VMT impact thresholds under Senate Bill 743, this analysis was conducted using Metropolitan's past practices, which are based on guidance from the Governors' Office of Planning and Research (OPR), as well as the methodology adopted by the City of Monterey Park because of the Project site's location.

Construction Period VMT Analysis

OPR does not provide guidance on evaluating VMT impacts during construction, and CEQA Guidelines Section 15064.3(b)(3) allows for a qualitative analysis of construction traffic VMT to be conducted. Only VMT from automobiles and light-duty trucks is considered for the purposes of VMT impact analysis under CEQA, pursuant to CEQA Guidelines 15064.3(a). Thus, VMT from medium/heavy trucks (such as those used for hauling soil export or demolition debris) is excluded from VMT impact analysis under CEQA.

Guidance provided by the California Department of Transportation's *Transportation Analysis under CEQA, First Edition* (2020)[2], states, "[i]mpacts associated with construction of a project may also require VMT analysis, particularly for large projects or projects located a considerable distance from urbanized areas." The document further notes, "[v]ehicle trips used for construction purposes would be temporary, and any generated VMT would generally be minor and limited to construction equipment and personnel and would not result in long-term trip generation." Furthermore, Project construction would take place in an urbanized area and would not constitute a large project that would have the potential to result in substantial increases to regional VMT because construction workers and materials can be primarily sourced locally and because of the relatively low volume of daily truck trips anticipated. In addition, the Project would not require lane closures that could result in out-of-direction travel as people attempt to avoid the construction area. Therefore, based on the Caltrans guidance, the Project would have a low potential to generate substantial VMT during construction.

The City of Monterey Park's *Transportation Study Guidelines for Vehicle Miles Traveled and Level of Service Assessment* (2020)[3] do not specify guidelines for evaluating construction VMT impacts. The City's VMT Policy provides for screening out projects that are presumed to have a less than significant impact. These project types include "[c]ommunity institutions (e.g., public libraries, fire stations, local government)." While Caltrans guidance indicates the Project would not generate a significant VMT impact during construction, it would also be screened out of further VMT analysis under the City's policy because the project type is a public-serving community institution.

---

[2] California Department of Transportation. 2020. Transportation Analysis under CEQA. https://dot.ca.gov/-/media/dot-media/programs/transportation-planning/documents/sb-743/2020-09-10-1st-edition-tac-fnl-a11y.pdf

[3] City of Monterey Park. 2020. Transportation Study Guidelines for Vehicle Miles Traveled and Level of Service Assessment.

Quantitative Project VMT Estimates – Provided for Informational Purposes Only

Construction-related VMT for the Project was quantified for informational purposes only. Trip generation estimates used in the calculation are presented in the Project Trip Generation section in **Table 2** and **Table 3**. Temporary construction worker commute trips are assumed to be generated from the local area or the greater Los Angeles County area. The Southern California Association of Governments' Travel Demand Model provides a commute VMT estimate of 8.1 miles in each direction, or 16.2 miles round trip, for the Traffic Analysis Zone (TAZ) in which Garvey Reservoir is located (TAZ 22145200).[4] Haul truck trip distances were based on the locations of the two planned receiving landfill sites in City of Industry and Azusa. The distance traveled by each delivery truck would vary based on the type of equipment or material and its origin facility. Delivery truck trips associated with delivery of specialized material or equipment may require longer distances than trips associated with delivery of standard materials and equipment that can be sourced locally. Because standard materials and equipment can primarily be sourced locally, for this analysis an average round-trip distance of 50 miles for material delivery trips was assumed, which is equivalent to approximately 100 daily VMT.[5]

VMT estimates were prepared for construction workers, soil export and demolition debris haul trucks, and material delivery trucks. **Table 4** shows the estimated daily automobile/light-duty truck VMT for workers per Project phase, and **Table 5** provides the estimated total medium/heavy truck VMT for soil export and demolition debris, with estimates for both receiving landfill sites described in the Project Trip Generation section. These trips would take place over limited durations within each phase. **Table 6** shows the estimated daily delivery truck VMT per Project phase. As shown in **Table 4**, maximum daily automobile/light-duty VMT would be 324 daily VMT, which would occur during Phase 1. As shown in **Table 5**, total medium/heavy truck VMT would be highest during Phase 1 (23,644 VMT), assuming all haul trips travel to the Waste Management Azusa Land Reclamation facility, and would be less during Phases 2 and 3. As shown in **Table 6**, average delivery truck VMT would be 100 daily VMT during all phases.

[4] Southern California Association of Governments. 2021. Trip-Based Travel Demand Model.

[5] Although a small number of delivery truck trips for specialized materials would require longer-distance trips, most delivery truck trips are presumed to originate from within Los Angeles County. A 25-mile radius (50-mile round trip) provides access to most of the urbanized area of Los Angeles County, including industrial and warehouse areas and the Ports of Los Angeles and Long Beach.

Table 4: Estimated Daily Automobile/Light-Duty Truck VMT – Construction Workers

Project Phase	Average Daily Number of Construction Workers*	Home Based Work VMT Per Employee (Garvey Reservoir TAZ)**	Daily VMT
Phase 1	20	16.2 miles	324
Phase 2	15		243
Phase 3	3		49

*See Table 1.

**Source: Southern California Association of Governments Trip-Based Travel Demand Model (2021)

Table 5: Estimated Total Medium/Heavy Truck VMT – Soil Export & Demolition Debris

Project Phase	Number of Round-Trip Haul Trips	Puente Hills Materials Recovery Facility		Waste Management Azusa Land Reclamation	
		Round-Trip Distance	Total Estimated VMT	Round-Trip Distance	Total Estimated VMT
Phase 1*	753	16.2 miles	12,199	31.4 miles	23,644
Phase 2**	45		729		1,413
Phase 3***	44		713		1,382

Source: Metropolitan (number of haul truck trips), Fehr & Peers (VMT estimates)

*Soil export (two-month period) and demolition debris (four-month period).

**Demolition debris (no time period available).

***Soil export (one-month period).

Table 6: Estimated Daily Delivery Truck VMT

Project Phase	Average Daily Number of Round-Trip Delivery Truck Trips	Round-Trip Distance	Daily VMT
Phase 1	2	50 miles	100
Phase 2	2		100
Phase 3	2		100

Source: Metropolitan (number of delivery truck trips), Fehr & Peers (VMT estimates)

Operational Period VMT Analysis

Operations and maintenance activities at Garvey Reservoir, including the frequency of staff visits, would be similar to existing conditions once construction activities are completed. Because the frequency of Metropolitan staff visits to the Garvey Reservoir would not change from existing conditions, Project operation would not generate new permanent vehicle trips and would have no effect on VMT in the area.

Conclusion

The Project would have a low potential to conflict with or be inconsistent with CEQA Guidelines Section 15064.3(b) based on applicable VMT impact criteria for the construction and operational periods. In addition, Project-generated vehicle trips during construction would not substantially affect the local transportation network due to low daily trip volumes.

Although no potentially significant transportation impacts have been identified, preparation of a construction traffic management plan in coordination with the City of Monterey Park is recommended as a best management practice. This plan should identify worker parking areas, define permitted work and haul hours, identify location(s) for flaggers, and determine appropriate haul routes for trucks.

Attachment A: Approved Truck Routes for the Cities of Monterey Park and Rosemead

CITY OF MONTEREY PARK TRUCK ROUTES

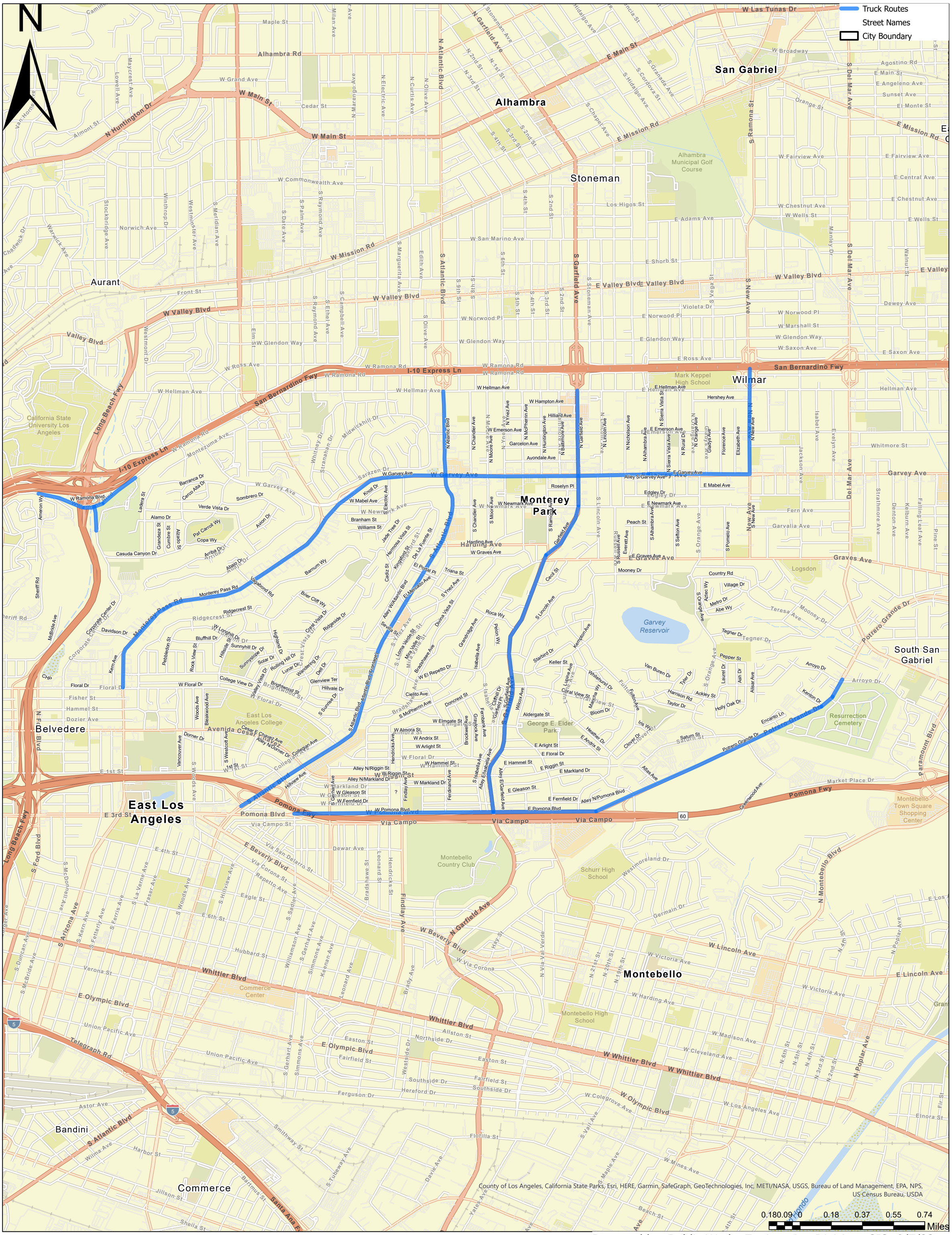

Prepared by: Public Works-Engineering Division- GIS- 9/7/23

CITY OF ROSEMEAD

TRUCK ROUTES

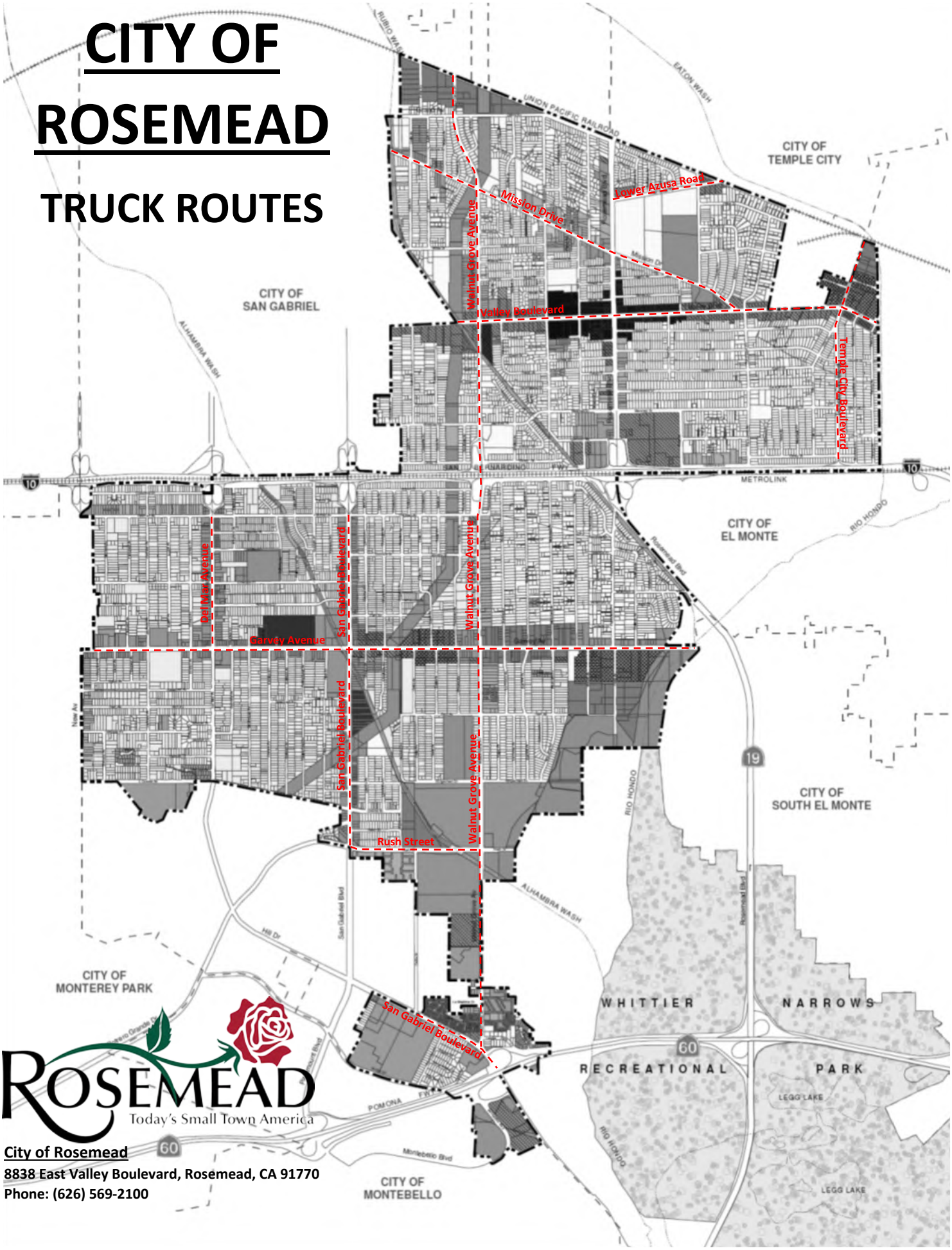

ROSEMEAD
Today's Small Town America

City of Rosemead
8838 East Valley Boulevard, Rosemead, CA 91770
Phone: (626) 569-2100

Appendix E

Tribal Cultural Resources Consultation Materials

DocuSign Envelope ID: 834986C5-56C4-4B14-B597-45FE98ADF5B1

THE METROPOLITAN WATER DISTRICT
OF SOUTHERN CALIFORNIA

January 18, 2024 **VIA CERTIFIED MAIL**

Mr. Anthony Morales
Tribal Chief
San Gabriel Band of Mission Indians
P.O. Box 639
San Gabriel, California 91778

Dear Mr. Morales:

Tribal Cultural Resource Identification Efforts for the Garvey Reservoir Rehabilitation Project

The Metropolitan Water District of Southern California (Metropolitan) is conducting Tribal Cultural Resource identification efforts for the Garvey Reservoir Rehabilitation Project (proposed Project, Project), in compliance with Sections 21074 and 21080.3.1 of the California Environmental Quality Act (CEQA).

This letter is to provide notification to the San Gabriel Band of Mission Indians that Metropolitan is preparing a Notice of Preparation and Initial Study for the Garvey Reservoir Rehabilitation Project, located in the geographic area identified as traditionally and culturally affiliated with your Tribe in a letter to Metropolitan dated December 1, 2016. Metropolitan's Garvey Reservoir is a drinking water storage facility located at 1061 South Orange Avenue in the city of Monterey Park in Los Angeles County. The Project consists of several rehabilitation components described below and depicted in Exhibits 1 and 2.

Reservoir Cover and Liner Replacement - The Garvey Reservoir floating cover is approximately 1,900,000 square feet in size and located in the center of the reservoir property. The floating cover and flexible membrane liner were installed between 1996 and 1999. The proposed Project would include replacement of the liner; inspection and repair of the reservoir drainage system underneath the liner; upgrades to the leak detection and monitoring system; installation a new floating cover; and start-up testing procedures including cover inflation, refilling, emergency dewatering, and instrument testing.

I/O Tower Rehabilitation - Garvey Reservoir is equipped with a 16-foot inside diameter inlet/outlet (I/O) tower located at the east end of the reservoir. The proposed Project includes seismic rehabilitation of the I/O tower and tower access bridge. Equipment within the I/O tower and lighting fixtures along the access bridge would also likely be upgraded and replaced.

DocuSign Envelope ID: 834986C5-56C4-4B14-B597-45FE98ADF5B1

Junction Structure Valve Replacement - The existing junction structure is located directly adjacent to South Orange Avenue and houses the valves and piping that connect Garvey Reservoir to the downstream water distribution system. The majority of the junction structure is located in a subterranean vault with only the roof and access stairway visible at street-level. The proposed Project includes replacement of five valves within the junction structure.

Facility Electrical System - The Garvey Reservoir facility electrical system is aged and requires upgrades to power sources (240-volt to 480-volt), relays at the switchgear unit, the control panel, and other components. The majority of proposed electrical system work would be located underground between the reservoir Administration Building and Water Quality Laboratory and the standby generator. An underground conduit would also be installed between the Administration Building and the existing communications tower on the southeastern portion of the Project site, near the surge tank.

Standby Generator - The proposed Project would also include replacement of the existing standby generator and its appurtenant electrical system, along with upgrades to meet current emission and fire codes under the United States Environmental Protection Agency's (USEPA) Emission and Fuel Standards Program. The new generator would either be located in the open air under a canopy structure or would be located in a new enclosed structure at the same location as the current generator, adjacent to the Administration Building and Water Quality Laboratory.

Surge Tank Telemetry - An existing 1,000-gallon surge tank is part of the on-site domestic water system located at the top of the reservoir embankment, immediately south of the reservoir. The proposed Project includes improvements to the telemetry equipment connecting the surge tank to pumps and would install a direct cable from the pumps in the junction structure to the surge tank pressure switch. The proposed Project also includes upgrades to the pressure switches and automated tank controls.

Pump Station - A new pump station facility would be constructed adjacent to South Orange Avenue to allow for better drought operating conditions, water quality, and flow range. The new pump station would be approximately 150 feet south of the junction structure and would house multiple pumps and valves to provide operational flexibility. The pump station would be built of concrete and masonry, approximately 500 square feet in size, and partially recessed about 10 feet into the hillside adjacent to South Orange Avenue. A subsurface valve tie-in to the Middle Feeder is also proposed and would be actuated when the pump station is utilized.

Administration Building and Water Quality Laboratory Rehabilitation - The Administration Building and Water Quality Laboratory are located in the former chlorination building that was part of the original reservoir construction in the 1950s and later converted to its current functions. The Administration Building and Water Quality Laboratory are located on the east side of the reservoir property, adjacent to South Orange Avenue. The Project includes design of a new interior plan layout for the entire building; relocation of the existing Water Quality

DocuSign Envelope ID: 834986C5-56C4-4B14-B597-45FE98ADF5B1

Laboratory to the Administrative Building and vice versa; relocation of the emergency eye wash station from outside the Administration Building to immediately adjacent to the Water Quality Laboratory; provision of a new Americans with Disabilities Act (ADA)-compliant parking stall with accessible path of travel to the building entrance; modifications to the existing restroom for compliance with the 2010 ADA Standard for Accessible Design and 2019 California Building Code (or most recent iteration in effect at the time); replacement of retaining wall on the south side of the structure to prevent ponding and overflow from precipitation; and upgrades to the heating, ventilation, air conditioning system (HVAC), and water heater.

Miscellaneous Site Upgrades - Miscellaneous site upgrades at Garvey Reservoir would include upgrades to the ammonia feed system (located on an out of service tank pad immediately west of the Administration Building and Water Quality Laboratory); repaving or repairing existing reservoir asphalt roads; chain link fencing and gate replacement along South Orange Avenue; security system upgrades; and drainage and landscaping removal and/or replacement.

As part of the effort to identify cultural resources at Garvey Reservoir, Metropolitan conducted cultural resource surveys of the entire Garvey Reservoir property, including the project components described above. Background research for the survey efforts included review of Metropolitan historic construction reports for Garvey Reservoir, review of original site construction photographs, and a records search at the South Central Coastal Information Center at California State University, Fullerton. The review of the historic construction report and site construction photos reveal that the Project site has been heavily disturbed by the original construction of the reservoir and reservoir piping running from the junction structure to the reservoir, with the majority of native soils removed from the site in order to create the concave feature that is the basis for the reservoir. Additionally, both the north and south slopes of the reservoir property are engineered, compacted slopes that are monitored by the California Department of Water Resources Division of Safety of Dams (DSOD). No prehistoric archaeological resources were identified within or adjacent to Garvey Reservoir as a result of the background research or record search. Four resources related to electrical towers and Southern California Edison's Mesa Substation were identified within a 0.25 mile radius of Garvey Reservoir to the south and east.

Intensive archaeological surveys were conducted by a qualified archaeologist in October 2021. The surveys were conducted utilizing intuitive survey methods covering 90-100 percent of the reservoir property, with transects spaced 10-15 meters apart in open areas. Areas of exposed ground were inspected for prehistoric artifacts (e.g., flaked stone tools, tool-making debris, ground stone milling tools), ecofacts (marine shell and bone), soil discoloration that might indicate the presence of a cultural midden, and features that might suggest the potential for former structures or buildings (e.g., standing exterior walls, foundations) or historic debris (e.g., metal, glass, ceramics). Ground disturbances such as burrows and drainages were also visually inspected. No archaeological resources were identified during the survey.

DocuSign Envelope ID: 834986C5-56C4-4B14-B597-45FE98ADF5B1

If you wish to formally consult or have information regarding the presence of tribal cultural resources that are of importance to the San Gabriel Band of Mission Indians in the project area that have the potential to be affected by the Garvey Reservoir Rehabilitation Project, please contact us within 30 days of receipt of this letter. We request that your response be in writing. Please direct questions to Michelle Morrison of my staff by telephone at (213) 217-7906 or via email at mmorrison@mwd2o.com. Please specify if any topics discussed are considered confidential.

Thank you for your cooperation and assistance in identifying important tribal cultural resources in the project area. Please contact me at (213) 217-7658 if you have any questions regarding this letter.

Very truly yours,

DocuSigned by:
Jennifer Harriger
1C5AACFD98D9493...

Jennifer Harriger
Manager, Environmental Planning Section

MM:ds
s:\administrative record - ceqa (final)\eir_2024_garvey reservoir rehabilitation project

Enclosures (2)

DocuSign Envelope ID: 834986C5-56C4-4B14-B597-45FE98ADF5B1

THE METROPOLITAN WATER DISTRICT
OF SOUTHERN CALIFORNIA

January 18, 2024 **VIA CERTIFIED MAIL**

Mr. Andrew Salas
Tribal Chairman
Gabrieleño Band of Mission Indians-Kizh Nation
P.O. Box 393
Covina, California 91723

Dear Mr. Salas:

Tribal Cultural Resource Identification Efforts for the Garvey Reservoir Rehabilitation Project

The Metropolitan Water District of Southern California (Metropolitan) is conducting Tribal Cultural Resource identification efforts for the Garvey Reservoir Rehabilitation Project (proposed Project, Project), in compliance with Sections 21074 and 21080.3.1 of the California Environmental Quality Act (CEQA).

This letter is to provide notification to the Gabrieleño Band of Mission Indians-Kizh Nation that Metropolitan is preparing a Notice of Preparation and Initial Study for the Garvey Reservoir Rehabilitation Project, located in the geographic area identified as traditionally and culturally affiliated with your Tribe in a letter to Metropolitan dated July 2016. Metropolitan's Garvey Reservoir is a drinking water storage facility located at 1061 South Orange Avenue in the city of Monterey Park in Los Angeles County. The Project consists of several rehabilitation components described below and depicted in Exhibits 1 and 2.

Reservoir Cover and Liner Replacement - The Garvey Reservoir floating cover is approximately 1,900,000 square feet in size and located in the center of the reservoir property. The floating cover and flexible membrane liner were installed between 1996 and 1999. The proposed Project would include replacement of the liner; inspection and repair of the reservoir drainage system underneath the liner; upgrade of the leak detection and monitoring system; installation a new floating cover; and start-up testing procedures including cover inflation, refilling, emergency dewatering, and instrument testing.

I/O Tower Rehabilitation - Garvey Reservoir is equipped with a 16-foot inside diameter inlet/outlet (I/O) tower located at the east end of the reservoir. The proposed Project includes seismic rehabilitation of the I/O tower and access bridge. Equipment within the I/O tower and lighting fixtures along the access bridge would also likely be upgraded and replaced.

DocuSign Envelope ID: 834986C5-56C4-4B14-B597-45FE98ADF5B1

Junction Structure Valve Replacement - The existing junction structure is located directly adjacent to South Orange Avenue and houses the valves and piping that connect Garvey Reservoir to the downstream water distribution system. The majority of the junction structure is located in a subterranean vault with only the roof and access stairway visible at street-level. The proposed Project includes replacement of five valves within the junction structure.

Facility Electrical System - The Garvey Reservoir facility electrical system is aged and requires upgrades to power sources (240-volt to 480-volt), relays at the switchgear unit, the control panel, and other components. The majority of proposed electrical system work would be located underground between the reservoir Administration Building and Water Quality Laboratory and the standby generator. An underground conduit would also be installed between the Administration Building and the existing communications tower on the southeastern portion of the Project site, near the surge tank.

Standby Generator - The proposed Project would also include replacement of the existing standby generator and its appurtenant electrical system, along with upgrades to meet current emission and fire codes under the United States Environmental Protection Agency's (USEPA) Emission and Fuel Standards Program. The new generator would either be located in the open air under a canopy structure or would be located in a new enclosed structure at the same location as the current generator, adjacent to the Administration Building and Water Quality Laboratory.

Surge Tank Telemetry - An existing 1,000-gallon surge tank is part of the on-site domestic water system located at the top of the reservoir embankment, immediately south of the reservoir. The proposed Project includes improvements to the telemetry equipment connecting the surge tank to pumps and would install a direct cable from the pumps in the junction structure to the surge tank pressure switch. The Project also includes upgrades to the pressure switches and automated tank controls.

Pump Station - A new pump station facility would be constructed adjacent to South Orange Avenue to allow for better drought operating conditions, water quality, and flow range. The new pump station would be approximately 150 feet south of the junction structure and would house multiple pumps and valves to provide operational flexibility. The pump station would be built of concrete and masonry, approximately 500 square feet in size, and partially recessed about 10 feet into the hillside adjacent to South Orange Avenue. A subsurface valve tie-in to the Middle Feeder is also proposed and would be actuated when the pump station is utilized.

Administration Building and Water Quality Laboratory Rehabilitation - The Administration Building and Water Quality Laboratory are located in the former chlorination building that was part of the original reservoir construction in the 1950s and later converted to its current functions. The Administration Building and Water Quality Laboratory are located on the east side of the reservoir property, adjacent to South Orange Avenue. The Project includes design of a new interior plan layout for the entire building; relocation of the existing Water Quality

DocuSign Envelope ID: 834986C5-56C4-4B14-B597-45FE98ADF5B1

Laboratory to the Administrative Building and vice versa; relocation of the emergency eye wash station from outside the Administration Building to immediately adjacent to the Water Quality Laboratory; provision of a new Americans with Disabilities Act (ADA)-compliant parking stall with accessible path of travel to the building entrance; modifications to the existing restroom for compliance with the 2010 ADA Standard for Accessible Design and 2019 California Building Code (or most recent iteration in effect at the time); replacement of retaining wall on the south side of the structure to prevent ponding and overflow from precipitation; and upgrades to the heating, ventilation, air conditioning system (HVAC), and water heater.

Miscellaneous Site Upgrades - Miscellaneous site upgrades at Garvey Reservoir would include upgrades to the ammonia feed system (located on an out of service tank pad immediately west of the Administration Building and Water Quality Laboratory); repaving or repairing existing reservoir asphalt roads; chain link fencing and gate replacement along South Orange Avenue; security system upgrades; and landscaping removal and/or replacement.

As part of the effort to identify cultural resources at Garvey Reservoir, Metropolitan conducted cultural resource surveys of the entire Garvey Reservoir property, including the project components described above. Background research for the survey efforts included review of Metropolitan historic construction reports for Garvey Reservoir, review of original site construction photographs, and a records search at the South Central Coastal Information Center at California State University, Fullerton. The review of the historic construction report and site construction photos reveal that the Project site has been heavily disturbed by the original construction of the reservoir and reservoir piping running from the junction structure to the reservoir, with the majority of native soils removed from the site in order to create the concave feature that is the basis for the reservoir. Additionally, both the north and south slopes of the reservoir property are engineered, compacted slopes that are monitored by the California Department of Water Resources Division of Safety of Dams (DSOD). No prehistoric archaeological resources were identified within or adjacent to Garvey Reservoir as a result of the background research or record search. Four resources related to electrical towers and Southern California Edison's Mesa Substation were identified within a 0.25-mile radius of Garvey Reservoir to the south and east.

Intensive archaeological surveys were conducted by a qualified archaeologist in October 2021. The surveys were conducted utilizing intuitive survey methods covering 90-100 percent of the reservoir property, with transects spaced 10-15 meters apart in open areas. Areas of exposed ground were inspected for prehistoric artifacts (e.g., flaked stone tools, tool-making debris, ground stone milling tools), ecofacts (marine shell and bone), soil discoloration that might indicate the presence of a cultural midden, and features that might suggest the potential for former structures or buildings (e.g., standing exterior walls, foundations) or historic debris (e.g., metal, glass, ceramics). Ground disturbances such as burrows and drainages were also visually inspected. No archaeological resources were identified during the survey.

DocuSign Envelope ID: 834986C5-56C4-4B14-B597-45FE98ADF5B1

If you wish to formally consult or have information regarding the presence of tribal cultural resources that are of importance to the Gabrieleño Band of Mission Indians-Kizh Nation in the project area that have the potential to be affected by the Garvey Reservoir Rehabilitation Project, please contact us within 30 days of receipt of this letter. We request that your response be in writing. Please direct questions to Michelle Morrison of my staff by telephone at (213) 217-7906 or via email at mmorrison@mwd2o.com. Please specify if any topics discussed are considered confidential.

Thank you for your cooperation and assistance in identifying important tribal cultural resources in the project area. Please contact me at (213) 217-7658 if you have any questions regarding this letter.

Very truly yours,

DocuSigned by:
Jennifer Harriger
1C5AACFD98D9493...

Jennifer Harriger
Manager, Environmental Planning Section

MM:ds
s:\administrative record - ceqa (final)\eir_2024_garvey reservoir rehabilitation project

Enclosures (2)

DocuSign Envelope ID: 834986C5-56C4-4B14-B597-45FE98ADF5B1

THE METROPOLITAN WATER DISTRICT
OF SOUTHERN CALIFORNIA

January 18, 2024 **VIA CERTIFIED MAIL**

Mr. Joseph Ontiveros
Cultural Resources Director
Soboba Band of Luiseño Indians
P.O. Box 487
San Jacinto, California 92581

Dear Mr. Ontiveros:

Tribal Cultural Resource Identification Efforts for the Garvey Reservoir Rehabilitation Project

The Metropolitan Water District of Southern California (Metropolitan) is conducting Tribal Cultural Resource identification efforts for the Garvey Reservoir Rehabilitation Project (proposed Project, Project), in compliance with Sections 21074 and 21080.3.1 of the California Environmental Quality Act (CEQA).

This letter is to provide notification to the Soboba Band of Luiseño Indians that Metropolitan is preparing a Notice of Preparation and Initial Study for the Garvey Reservoir Rehabilitation Project, located in the geographic area identified as traditionally and culturally affiliated with your Tribe in letters to Metropolitan dated June 22 and July 2, 2015. Metropolitan's Garvey Reservoir is a drinking water storage facility located at 1061 South Orange Avenue in the city of Monterey Park in Los Angeles County. The Project consists of several rehabilitation components described below and depicted in Exhibits 1 and 2.

Reservoir Cover and Liner Replacement - The Garvey Reservoir floating cover is approximately 1,900,000 square feet in size and located in the center of the reservoir property. The floating cover and flexible membrane liner were installed between 1996 and 1999. The proposed Project would include replacement of the liner; inspection and repair of the reservoir drainage system underneath the liner; upgrade of the leak detection and monitoring system; installation a new floating cover; and start-up testing procedures including cover inflation, refilling, emergency dewatering, and instrument testing.

I/O Tower Rehabilitation - Garvey Reservoir is equipped with a 16-foot inside diameter inlet/outlet (I/O) tower located at the east end of the reservoir. The proposed Project includes seismic rehabilitation of the I/O tower and access bridge. Equipment within the I/O tower and lighting fixtures along the access bridge would also likely be upgraded and replaced.

DocuSign Envelope ID: 834986C5-56C4-4B14-B597-45FE98ADF5B1

Junction Structure Valve Replacement - The existing junction structure is located directly adjacent to South Orange Avenue and houses the valves and piping that connect Garvey Reservoir to the downstream water distribution system. The majority of the unction Structure is located in a subterranean vault with only the roof and access stairway visible at street-level. The proposed Project includes replacement of five valves within the junction structure.

Facility Electrical System - The Garvey Reservoir facility electrical system is aged and requires upgrades to power sources (240-volt to 480-volt), relays at the switchgear unit, the control panel, and other components. The majority of proposed electrical system work would be located underground between the reservoir Administration Building and Water Quality Laboratory and the standby generator. An underground conduit would also be installed between the Administration Building and the existing communications tower on the southeastern portion of the Project site, near the surge tank.

Standby Generator - The proposed Project would also include replacement of the existing standby generator and its appurtenant electrical system, along with upgrades to meet current emission and fire codes under the United States Environmental Protection Agency's (USEPA) Emission and Fuel Standards Program. The new generator would either be located in the open air under a canopy structure or would be located in a new enclosed structure at the same location as the current generator, adjacent to the Administration Building and Water Quality Laboratory.

Surge Tank Telemetry - An existing 1,000-gallon surge tank is part of the on-site domestic water system located at the top of the reservoir embankment, immediately south of the reservoir. The proposed Project includes improvements to the telemetry equipment connecting the surge tank to pumps and would install a direct cable from the pumps in the junction structure to the surge tank pressure switch. The Project also includes upgrades to the pressure switches and automated tank controls.

Pump Station - A new pump station facility would be constructed adjacent to South Orange Avenue to allow for better drought operating conditions, water quality, and flow range. The new pump station would be approximately 150 feet south of the junction structure and would house multiple pumps and valves to provide operational flexibility. The pump station would be built of concrete and masonry, approximately 500 square feet in size, and partially recessed about 10 feet into the hillside adjacent to South Orange Avenue. A subsurface valve tie-in to the Middle Feeder is also proposed and would be actuated when the pump station is utilized.

Administration Building and Water Quality Laboratory Rehabilitation - The Administration Building and Water Quality Laboratory are located in the former chlorination building that was part of the original reservoir construction in the 1950s and later converted to its current functions. The Administration Building and Water Quality Laboratory are located on the east side of the reservoir property, adjacent to South Orange Avenue. The Project includes design of a new interior plan layout for the entire building; relocation of the existing Water Quality

DocuSign Envelope ID: 834986C5-56C4-4B14-B597-45FE98ADF5B1

Laboratory to the Administrative Building and vice versa; relocation of the emergency eye wash station from outside the Administration Building to immediately adjacent to the Water Quality Laboratory; provision of a new Americans with Disabilities Act (ADA)-compliant parking stall with accessible path of travel to the building entrance; modifications to the existing restroom for compliance with the 2010 ADA Standard for Accessible Design and 2019 California Building Code (or most recent iteration in effect at the time); replacement of retaining wall on the south side of the structure to prevent ponding and overflow from precipitation; and upgrades to the heating, ventilation, air conditioning system (HVAC), and water heater.

Miscellaneous Site Upgrades - Miscellaneous site upgrades at Garvey Reservoir would include upgrades to the ammonia feed system (located on an out of service tank pad immediately west of the Administration Building and Water Quality Laboratory); repaving or repairing existing reservoir asphalt roads; chain link fencing and gate replacement along South Orange Avenue; security system upgrades; drainage improvements, and landscaping removal and/or replacement.

As part of the effort to identify cultural resources at Garvey Reservoir, Metropolitan conducted cultural resource surveys of the entire Garvey Reservoir property, including the project components described above. Background research for the survey efforts included review of Metropolitan historic construction reports for Garvey Reservoir, review of original site construction photographs, and a records search at the South Central Coastal Information Center at California State University, Fullerton. The review of the historic construction report and site construction photos reveal that the Project site has been heavily disturbed by the original construction of the reservoir and reservoir piping running from the junction structure to the reservoir, with the majority of native soils removed from the site in order to create the concave feature that is the basis for the reservoir. Additionally, both the north and south slopes of the reservoir property are engineered, compacted slopes that are monitored by the California Department of Water Resources Division of Safety of Dams (DSOD). No prehistoric archaeological resources were identified within or adjacent to Garvey Reservoir as a result of the background research or record search. Four resources related to electrical towers and Southern California Edison's Mesa Substation were identified within a 0.25 mile radius of Garvey Reservoir to the south and east.

Intensive archaeological surveys were conducted by a qualified archaeologist in October 2021. The surveys were conducted utilizing intuitive survey methods covering 90-100% of the reservoir property, with transects spaced 10-15 meters apart in open areas. Areas of exposed ground were inspected for prehistoric artifacts (e.g., flaked stone tools, tool-making debris, ground stone milling tools), ecofacts (marine shell and bone), soil discoloration that might indicate the presence of a cultural midden, and features that might suggest the potential for former structures or buildings (e.g., standing exterior walls, foundations) or historic debris (e.g., metal, glass, ceramics). Ground disturbances such as burrows and drainages were also visually inspected. No archaeological resources were identified during the survey.

DocuSign Envelope ID: 834986C5-56C4-4B14-B597-45FE98ADF5B1

If you wish to formally consult or have information regarding the presence of tribal cultural resources that are of importance to the Soboba Band of Luiseño Indians in the project area that have the potential to be affected by the Garvey Reservoir Rehabilitation Project, please contact us within 30 days of receipt of this letter. We request that your response be in writing. Please direct questions to Michelle Morrison of my staff by telephone at (213) 217-7906 or via email at mmorrison@mwd2o.com. Please specify if any topics discussed are considered confidential.

Thank you for your cooperation and assistance in identifying important tribal cultural resources in the project area. Please contact me at (213) 217-7658 if you have any questions regarding this.

Very truly yours,

DocuSigned by:
Jennifer Harriger
1C5AACFD98D9493...

Jennifer Harriger
Manager, Environmental Planning Section

MM:ds
s:\administrative record - ceqa (final)\eir_2024_garvey reservoir rehabilitation project

Enclosures (2)

This exhibit is to be used for approximate positioning only. It is not to be used, nor is it intended to be used for engineering, recording or litigation purposes. No warranty of accuracy is implied or guaranteed.

Electrical Upgrades

Junction Structure
Generator Building
Ammonia Tank Farm
Admin Building/ WQ Lab
Security Fence Replacement
S. Orange Ave.

Surge Tank Replacement

Surge Tank

Mooney Dr.
S. Alhambra Ave.
Cover Liner Replacement
Inlet/Outlet Tower Replacement
GARVEY RESERVOIR
Security Fence Replacement
Junction Structure
Electrical Upgrades
Surge Tank Replacement
Proposed Pump Station Facility
S. Orange Ave.
Kempton Ave.
Fulton Ave.
Pepper St.
Van Buren Dr.

- Security Fence Replacement
- Junction Structure
- Electrical Upgrades
- Inlet/Outlet Tower Replacement
- Cover Liner Replacement
- Surge Tank Replacement
- Proposed Pump Station Facility

The Metropolitan Water District of Southern California
Engineering Services Group

Garvey Reservoir
Rehabilitation Project

Feet
0 100 200 400

\\sanetapp01\Infrastructure_Reliability_Section\Infrastructure_Unit\Geodetics_and_Mapping_Team_1\Project\Garvey_Reservoir\GIS\Rehabilitation_Project_Public_Noticing.aprx (Garvey_Rehabilitation_20230224) [Printed 2/27/2023] Prepared by: Enrique Chen (GMT1) Requestor: Michelle Morrison Previous Job#: GIS21-06-19 Job#: GIS23-02-34

Exhibit 2 - Site Photographs of Reservoir, I/O Tower, and Junction Structure

Reservoir and Access Road, Facing Northeast.

Reservoir Cover, I/O Tower and Access Bridge, Facing West.

Junction Structure Access and Roof, Facing South.

Valve Inside Junction Structure Vault.

Exhibit 2 - Site Photographs of Administration and Water Quality Building, Standby Generator, and Proposed Pump Station

Administration Building and Water Quality Laboratory, Facing South.

Slope and Retaining Wall Behind Administration Building and Water Quality Laboratory, Facing South.

Standby Generator Building, Facing Southwest.

Exhibit 2 - Site Photographs of Surge Tank, Construction Staging Area, and Secondary Access Gate

Surge Tank, Facing South

Construction Trailer Office, Facing South

Existing Construction Staging Area, Facing Southwest

Access Gate and Chain Link Fencing, Facing Northeast

THE METROPOLITAN WATER DISTRICT
OF SOUTHERN CALIFORNIA

The Metropolitan Water District of Southern California

700 North Alameda Street
Los Angeles, CA 90012-2944

213-217-6000

mwdh2o.com