NOISE AND VIBRATION IMPACT ANALYSIS

GTS COLD STORAGE PROJECT

APPLE VALLEY, CALIFORNIA

LSA

December 2022

NOISE AND VIBRATION IMPACT ANALYSIS

GTS COLD STORAGE PROJECT

APPLE VALLEY, CALIFORNIA

Submitted to:

Green Trucking Solutions LLC
14816 Valley Boulevard
Fontana, California 92335

Prepared by:

LSA
20 Executive Park, Suite 200
Irvine, California 92614
(949) 553-0666

Project No. GTS2201

December 2022

TABLE OF CONTENTS

INTRODUCTION **1**
PROJECT LOCATION **1**
PROJECT DESCRIPTION **1**
CHARACTERISTICS OF SOUND **1**
Measurement of Sound 4
Physiological Effects of Noise 5
FUNDAMENTALS OF VIBRATION **5**
REGULATORY SETTING **7**
Federal Guidelines 7
Local Regulations 8
EXISTING SETTING **10**
Land Uses in the Project Vicinity 10
Overview of the Existing Ambient Noise Environment 11
Ambient Noise Level Measurement 11
Existing Aircraft Noise 13
Existing Traffic Noise 13
IMPACTS **14**
Short-Term Construction Noise Impacts 14
Short-Term Construction Vibration Impacts 19
Long-Term Traffic Noise Impacts 21
Long-Term Stationary-Source Noise Impacts 23
Long-Term Ground-Borne Noise and Vibration from Vehicular Traffic 26
MINIMIZATION MEASURES **26**
NOISE REDUCTION MEASURES **26**
Short-Term Construction Noise Impacts 26
Short-Term Construction Vibration Impacts 26
Long-Term Aircraft Noise Impacts 27
Long-Term Traffic Noise Impacts 27
Long-Term Stationary-Source Noise Impacts 27
Long-Term Vibration Impacts 27
REFERENCES **28**

APPENDICES

A: NOISE MONITORING SURVEY SHEETS
B: FHWA HIGHWAY TRAFFIC NOISE MODEL PRINTOUTS
C: NOISE REDUCTION CALCULATIONS
D: REFRIGERATION EQUIPMENT SPECIFICATIONS
E: REFRIGERATION EQUIPMENT NOISE CALCULATIONS
F: FIRE PUMP SPECIFICATIONS
G: HVAC SPECIFICATIONS

FIGURES AND TABLES

FIGURES

Figure 1: Regional and Project Location 2
Figure 2: Conceptual Site Plan 3
Figure 3: Noise Monitoring Locations 12

TABLES

Table A: Definitions of Acoustical Terms 6
Table B: Common Sound Levels and Their Noise Sources 6
Table C: Construction Vibration Damage Criteria 7
Table D: Apple Valley Land Use Compatibility for Community Noise Environments 8
Table E: Exterior Noise Limits 9
Table F: Maximum Construction Noise Levels 10
Table G: Short-Term Ambient Noise Level Measurements 11
Table H: Long-Term Ambient Noise Monitoring Results 13
Table I: Existing Traffic Noise Levels 14
Table J: Typical Construction Equipment Noise Levels 15
Table K: Summary of Construction Phase, Equipment, and Noise Levels 17
Table L: Mobile Construction Noise Levels 18
Table M: Stationary Construction Noise Levels 18
Table N: Vibration Source Amplitudes for Construction Equipment 19
Table O: Potential Construction Vibration Annoyance 20
Table P: Potential Construction Vibration Damage 21
Table Q: Existing (2022) Traffic Noise Levels Without and With Project 22
Table R: Stationary-Source Noise Levels 25

LIST OF ABBREVIATIONS AND ACRONYMS

CalEEMod	California Emissions Estimator Model
CNEL	Community Noise Equivalent Level
CO_2	carbon dioxide
dB	decibel
dBA	A-weighted decibels
FHWA	Federal Highway Administration
ft	foot/feet
FTA	Federal Transit Administration
HVAC	heating, ventilation, and air conditioning
in/sec	inches per second
L_{dn}	day-night average noise level
L_{eq}	equivalent continuous sound level
L_{max}	maximum instantaneous noise level
NAVISP	North Apple Valley Industrial Specific Plan
PPV	peak particle velocity
project	GTS Cold Storage Project
RMS	root-mean-square (velocity)
Town	Town of Apple Valley
VdB	vibration velocity decibels

NOISE AND VIBRATION IMPACT ANALYSIS

INTRODUCTION

This Noise and Vibration Impact Analysis has been prepared to evaluate the potential noise and vibration impacts and reduction measures associated with the construction and operation of the proposed industrial warehouse Project (project) in Apple Valley, California. This report is intended to satisfy the Town of Apple Valley (Town) requirements and the California Environmental Quality Act for a project-specific noise and vibration impact analysis by examining the impacts to adjacent land uses and identifying reduction measures that the project requires.

PROJECT LOCATION

The project site is at the northwest corner of Navajo Road and Lafayette Street. The project site is an undeveloped, 18.7-acre lot on Assessor's Parcel Number 0463-231-06. Also, the project site is within the North Apple Valley Industrial Specific Plan (NAVISP) and the project site is zoned as Specific Plan Industrial. The project location and vicinity are shown in Figure 1.

PROJECT DESCRIPTION

The proposed project would develop a 385,004-square-foot cold storage warehouse building. The proposed warehouse project would also include two 2-story offices, an electrical and fire pump building, dock parking, and both automobile and truck parking spaces. It is expected that construction of the project would start in April 2023 and be completed in August 2024, resulting in a total construction duration of approximately 16 months. Figure 2 shows the site plan.

CHARACTERISTICS OF SOUND

Sound is increasing in the environment and can affect quality of life. Noise is usually defined as unwanted sound. Noise consists of any sound that may produce physiological or psychological damage and/or interfere with communication, work, rest, recreation, and sleep.

To the human ear, sound has two significant characteristics: pitch and loudness. Pitch is generally an annoyance, while loudness can affect the ability to hear. Pitch is the number of complete vibrations (or cycles per second) of a wave, resulting in the tone's range from high to low. Loudness is the strength of a sound and describes a noisy or quiet environment; it is measured by the amplitude of the sound wave. Loudness is determined by the intensity of the sound waves combined with the reception characteristics of the human ear. Sound intensity refers to how hard the sound wave strikes an object, which in turn produces the sound's effect. This characteristic of sound can be precisely measured with instruments. The analysis of a project defines the noise environment of the project area in terms of sound intensity and its effect on adjacent sensitive land uses.

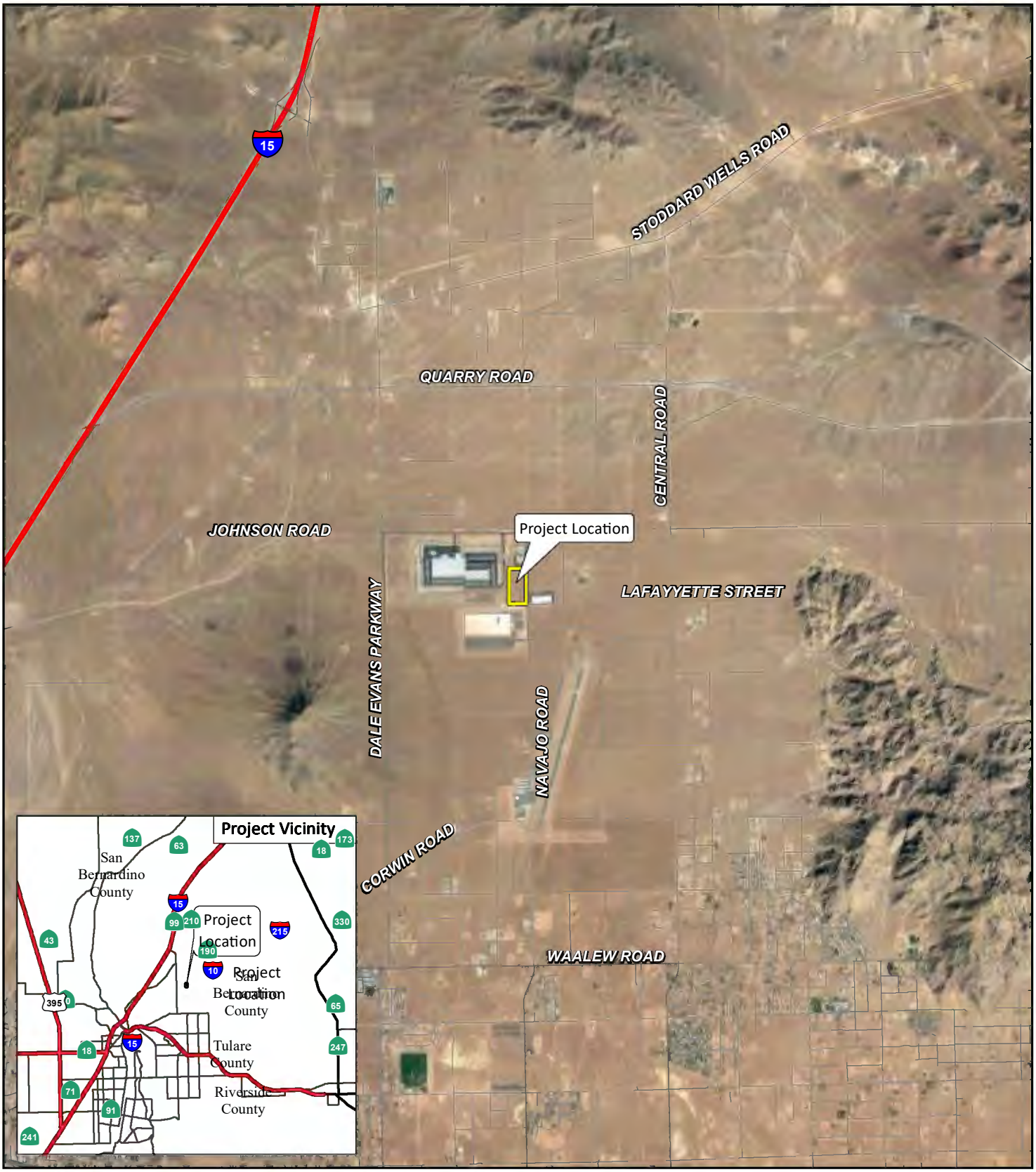

FIGURE 1

N

0 2500 5000
FEET

SOURCE: ESRI Streetmap, 2021; Google Earth, 2018.

I:\GTS2201\GIS\MXD\Project_Location.mxd (10/26/2022)

GTA Cold Storage Project

Regional and Project Location

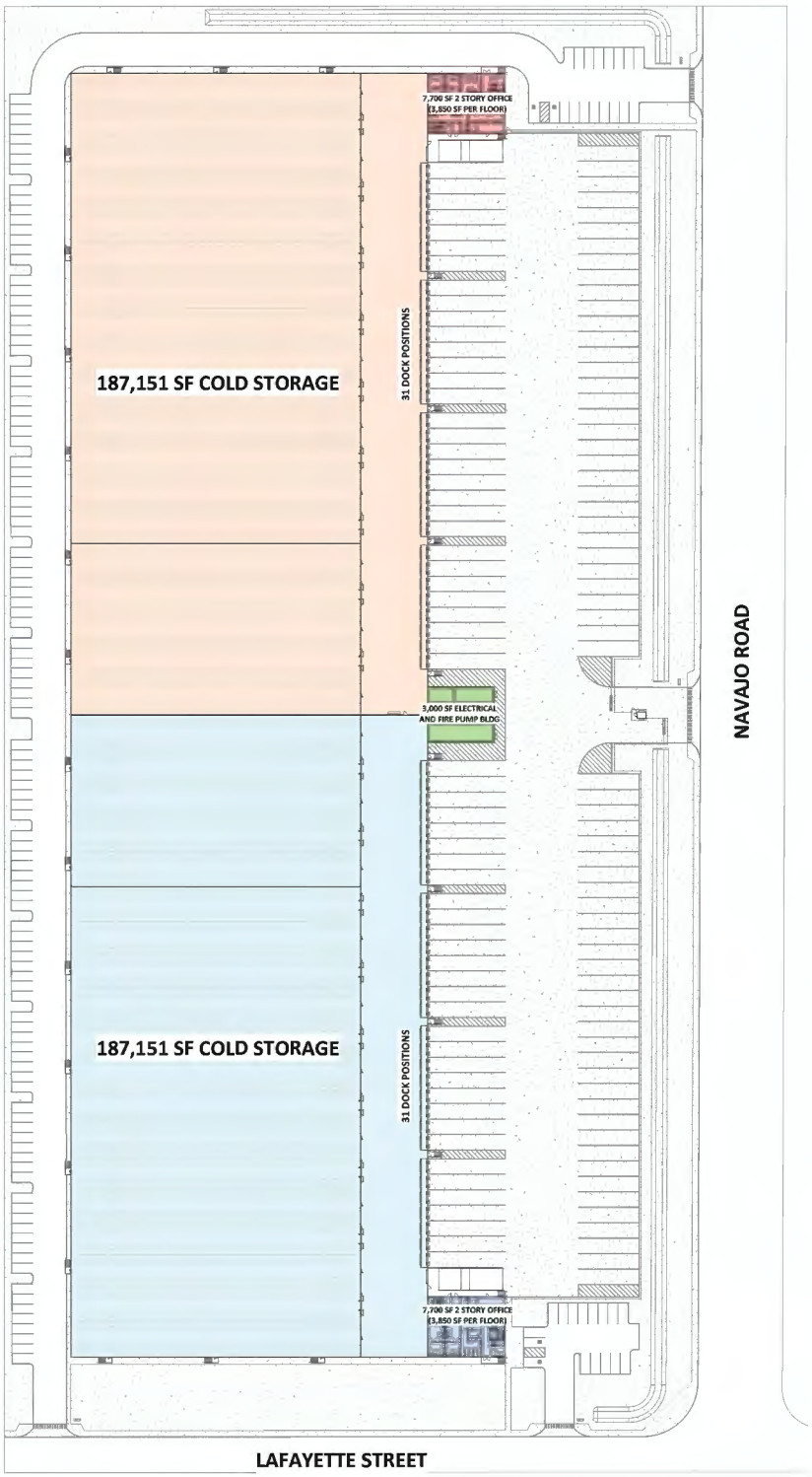

LSA

FIGURE 2

N

NOT TO SCALE

SOURCE: Fisher Construction Group

I:\GTS2201\G\Site_Plan.ai (10/26/2022)

GTA Cold Storage Project

Conceptual Site Plan

Measurement of Sound

Sound intensity is measured through the A-weighted scale to correct for the relative frequency response of the human ear. That is, an A-weighted noise level de-emphasizes low and very high frequencies of sound similar to the human ear's de-emphasis of these frequencies. Unlike units of measurement that use a linear scale (e.g., inches or pounds), decibels use a scale based on powers of 10.

For example, 10 decibels (dB) is 10 times more intense than 0 dB, 20 dB is 100 times more intense than 0 dB, and 30 dB is 1,000 times more intense than 0 dB. Thirty decibels (30 dB) represents 1,000 times as much acoustic energy as 0 dB. The decibel scale increases as the square of the change, representing the sound-pressure energy. A sound as soft as human breathing is about 10 times greater than 0 dB. The decibel system of measuring sound gives a rough connection between the physical intensity of sound and its perceived loudness to the human ear. A 10 dB increase in sound level is perceived by the human ear as only a doubling of the loudness of the sound. Ambient sounds generally range from 30 A-weighted decibels (dBA) (very quiet) to 100 dBA (very loud).

Sound levels are generated from a source, and their decibel level decreases as the distance from that source increases. Sound dissipates exponentially with distance from the noise source. For a single point source, sound levels decrease approximately 6 dB for each doubling of distance from the source. This drop-off rate is appropriate for noise generated by stationary equipment. If noise is produced by a line source, such as highway traffic or railroad operations, the sound decreases 3 dB for each doubling of distance in a hard site environment. Line source noise in a relatively flat environment with absorptive vegetation decreases 4.5 dB for each doubling of distance.

There are many ways to rate noise for various time periods, but an appropriate rating of ambient noise affecting humans also accounts for the annoying effects of sound. The equivalent continuous sound level (L_{eq}) is the total sound energy of time-varying noise over a sample period. However, the predominant rating scales for human communities in California are L_{eq} and the Community Noise Equivalent Level (CNEL) or the day-night average noise level (L_{dn}) based on dBA. CNEL is the time-varying noise over a 24-hour period, with a 5 dBA weighting factor applied to the hourly L_{eq} for noises occurring from 7:00 p.m. to 10:00 p.m. (defined as relaxation hours) and a 10 dBA weighting factor applied to noise occurring from 10:00 p.m. to 7:00 a.m. (defined as sleeping hours). L_{dn} is similar to the CNEL scale but without the adjustment for events occurring during relaxation hours. CNEL and L_{dn} are within 1 dBA of each other and are normally interchangeable. The noise adjustments are added to the noise events occurring during the more sensitive hours.

Other noise rating scales of importance, when assessing the annoyance factor, include the maximum instantaneous noise level (L_{max}), which is the highest exponential time-averaged sound level that occurs during a stated time period. The noise environments discussed in this analysis are specified in terms of L_{max} for short-term noise impacts. L_{max} reflects peak operating conditions and addresses the annoying aspects of intermittent noise.

Another noise scale often used together with L_{max} in noise ordinances for enforcement purposes is noise standards in terms of percentile noise levels. For example, the L_{10} noise level represents the noise level exceeded 10 percent of the time during a stated period. The L_{50} noise level represents the median noise level. Half of the time the noise level exceeds this level, and half of the time it is

less than this level. The L_{90} noise level represents the noise level exceeded 90 percent of the time and is considered the background noise level during a monitoring period. For a relatively constant noise source, L_{eq} and L_{50} are approximately the same.

Noise impacts can be described in three categories. The first category, audible impacts, refers to increases in noise levels noticeable to humans. Audible increases in noise levels generally involve a change of 3 dB or greater because that level has been found to be barely perceptible in exterior environments. The second category, potentially audible impacts, refers to a change in the noise level between 1 and 3 dB. This range of noise levels has been found to be noticeable only in laboratory environments. The last category involves changes in noise levels of less than 1 dB, which are inaudible to the human ear. Only audible changes in existing ambient or background noise levels are considered potentially significant.

Physiological Effects of Noise

Physical damage to human hearing begins at prolonged exposure to noise levels higher than 85 dBA. Exposure to high noise levels affects the entire system, with prolonged noise exposure in excess of 75 dBA increasing body tensions and thereby affecting blood pressure and functions of the heart and the nervous system. In comparison, extended periods of noise exposure above 90 dBA would result in permanent cell damage. When the noise level reaches 120 dBA, a tickling sensation occurs in the human ear, even with short-term exposure. This level of noise is called the threshold of feeling. As the sound reaches 140 dBA, the tickling sensation is replaced by the feeling of pain in the ear. This is called the threshold of pain. A sound level of 160 to 165 dBA will potentially result in dizziness or loss of equilibrium. The ambient or background noise problem is widespread and generally more concentrated in urban areas than in outlying, less-developed areas.

Table A lists definitions of acoustical terms, and Table B shows common sound levels and their noise sources.

FUNDAMENTALS OF VIBRATION

Vibration refers to ground-borne noise and perceptible motion. Ground-borne vibration is almost exclusively a concern inside buildings and is rarely perceived as a problem outdoors, where the motion may be discernible, but without the effects associated with the shaking of a building there is less adverse reaction. Vibration energy propagates from a source through intervening soil and rock layers to the foundations of nearby buildings. The vibration then propagates from the foundation throughout the remainder of the structure. Building vibration may be perceived by occupants as the motion of building surfaces, the rattling of items sitting on shelves or hanging on walls, or a low-frequency rumbling noise. The rumbling noise is caused by the vibration of walls, floors, and ceilings that radiate sound waves. Although the perceptibility threshold is approximately 65 vibration velocity decibels (VdB), human response to vibration is not usually substantial unless the vibration exceeds 70 VdB. A vibration level that causes annoyance is well below the damage risk threshold for typical buildings.

Table A: Definitions of Acoustical Terms

Term	Definition
Decibel, dB	A unit of noise level that denotes the ratio between two quantities that are proportional to power; the number of decibels is 10 times the logarithm (to the base 10) of this ratio.
Frequency, Hz	Of a function periodic in time, the number of times that the quantity repeats itself in 1 second (i.e., number of cycles per second).
A-Weighted Sound Level, dBA	The sound level obtained by use of A-weighting. The A-weighting filter de-emphasizes the very low- and very high-frequency components of the sound in a manner similar to the frequency response of the human ear and correlates well with subjective reactions to noise. (All sound levels in this report are A-weighted unless reported otherwise.)
L_2, L_8, L_{50}, L_{90}	The fast A-weighted noise levels that are equaled or exceeded by a fluctuating sound level 2 percent, 8 percent, 50 percent, and 90 percent of a stated time period.
Equivalent Continuous Noise Level, L_{eq}	The level of a steady sound that, in a stated time period and at a stated location, has the same A-weighted sound energy as the time-varying sound.
Community Noise Equivalent Level, CNEL	The 24-hour A-weighted average sound level from midnight to midnight, obtained after the addition of 5 dB to sound levels occurring in the evening from 7:00 p.m. to 10:00 p.m. and after the addition of 10 dB to sound levels occurring in the night between 10:00 p.m. and 7:00 a.m.
Day/Night Noise Level, L_{dn}	The 24-hour A-weighted average sound level from midnight to midnight, obtained after the addition of 10 dB to sound levels occurring in the night between 10:00 p.m. and 7:00 a.m.
L_{max}, L_{min}	The maximum and minimum A-weighted sound levels measured on a sound level meter during a designated time interval using fast-time averaging.
Ambient Noise Level	The all-encompassing noise associated with a given environment at a specified time; usually a composite of sound from many sources from many directions, near and far; no particular sound is dominant.
Intrusive	The noise that intrudes over and above the existing ambient noise at a given location. The relative intrusiveness of a sound depends on its amplitude, duration, frequency, time of occurrence, and tonal or informational content, as well as the prevailing ambient noise level.

Source: *Handbook of Acoustical Measurements and Noise Control* (Harris 1991).

Table B: Common Sound Levels and Their Noise Sources

Noise Source	A-Weighted Sound Level in Decibels	Noise Environments	Subjective Evaluations
Near Jet Engine	140	Deafening	128 times as loud
Civil Defense Siren	130	Threshold of Pain	64 times as loud
Hard Rock Band	120	Threshold of Feeling	32 times as loud
Accelerating Motorcycle a Few Feet Away	110	Very Loud	16 times as loud
Pile Driver; Noisy Urban Street/Heavy City Traffic	100	Very Loud	8 times as loud
Ambulance Siren; Food Blender	95	Very Loud	—
Garbage Disposal	90	Very Loud	4 times as loud
Freight Cars; Living Room Music	85	Loud	—
Pneumatic Drill; Vacuum Cleaner	80	Loud	2 times as loud
Busy Restaurant	75	Moderately Loud	—
Near-Freeway Auto Traffic	70	Moderately Loud	Reference Level
Average Office	60	Quiet	½ as loud
Suburban Street	55	Quiet	—
Light Traffic; Soft Radio Music in Apartment	50	Quiet	¼ as loud
Large Transformer	45	Quiet	—
Average Residence without Stereo Playing	40	Faint	⅛ as loud
Soft Whisper	30	Faint	—
Rustling Leaves	20	Very Faint	—
Human Breathing	10	Very Faint	Threshold of Hearing
—	0	Very Faint	—

Source: Compiled by LSA (2004).

Typical sources of ground-borne vibration are construction activities (e.g., blasting, pile driving, and operating heavy-duty earthmoving equipment), steel-wheeled trains, and occasional traffic on rough roads. Problems with both ground-borne vibration and noise from these sources are usually localized to areas within approximately 100 feet (ft) from the vibration source, although there are examples of ground-borne vibration causing interference out to distances greater than 200 ft (FTA 2018). When roadways are smooth, vibration from traffic, even heavy trucks, is rarely perceptible. It is assumed for most projects that the roadway surface will be smooth enough that ground-borne vibration from street traffic will not exceed the impact criteria; however, both construction of the project and the freight train operations could result in ground-borne vibration that may be perceptible and annoying.

Ground-borne vibration has the potential to disturb people and damage buildings. Although it is very rare for train-induced ground-borne vibration to cause even cosmetic building damage, it is not uncommon for construction processes (e.g., blasting and pile driving) to cause vibration of sufficient amplitudes to damage nearby buildings (FTA 2018). Ground-borne vibration is usually measured in terms of vibration velocity, either the root-mean-square (RMS) velocity or peak particle velocity (PPV). The RMS velocity is best for characterizing human response to building vibration, and PPV is used to characterize potential for damage. Decibel notation acts to compress the range of numbers required to describe vibration. The vibration velocity level in decibels is defined as the following:

$$L_v = 20 \log_{10} [V/V_{ref}]$$

where L_v is the vibration velocity in decibels (VdB), V is the RMS velocity amplitude, and V_{ref} is the reference velocity amplitude, or 1×10^{-6} inches/second (in/sec) used in the United States.

REGULATORY SETTING

Federal Guidelines

Federal Transit Administration

Vibration standards included in the FTA Transit Noise and Vibration Impact Assessment Manual (FTA 2018) were used in this analysis because the Town of Apple Valley does not have construction vibration damage criteria. Table C provides the criteria for assessing the potential vibration building damage associated with construction activities.

Table C: Construction Vibration Damage Criteria

Building Category	PPV (in/sec)	Approximate L_V (VdB)[1]
Reinforced concrete, steel, or timber (no plaster)	0.50	102
Engineered concrete and masonry (no plaster)	0.30	98
Non-engineered timber and masonry buildings	0.20	94
Buildings extremely susceptible to vibration damage	0.12	90

Source: *Transit Noise and Vibration Impact Assessment Manual* (FTA 2018).
[1] RMS vibration velocity in decibels (VdB) is 1 µin/sec.
µin/sec = microinches per second
FTA = Federal Transit Administration
in/sec = inches per second
L_V = vibration velocity in decibels
PPV = peak particle velocity
RMS = root-mean-square
VdB = vibration velocity decibels

Local Regulations

Town of Apple Valley

Town of Apple Valley General Plan Noise Element. The Town's General Plan Noise Element (Town of Apple Valley 2009) lists policies and programs to meet the Town's noise-related goals and has established land use compatibility for community noise environments shown in Table D to evaluate the acceptability of noise levels for each land use category. As shown in Table D, noise levels up to 75 dBA CNEL are normally acceptable and between 70 dBA CNEL and 80 dBA CNEL are conditionally acceptable for industrial land uses. The following are the applicable Town goals, policies, and programs.

Table D: Apple Valley Land Use Compatibility for Community Noise Environments

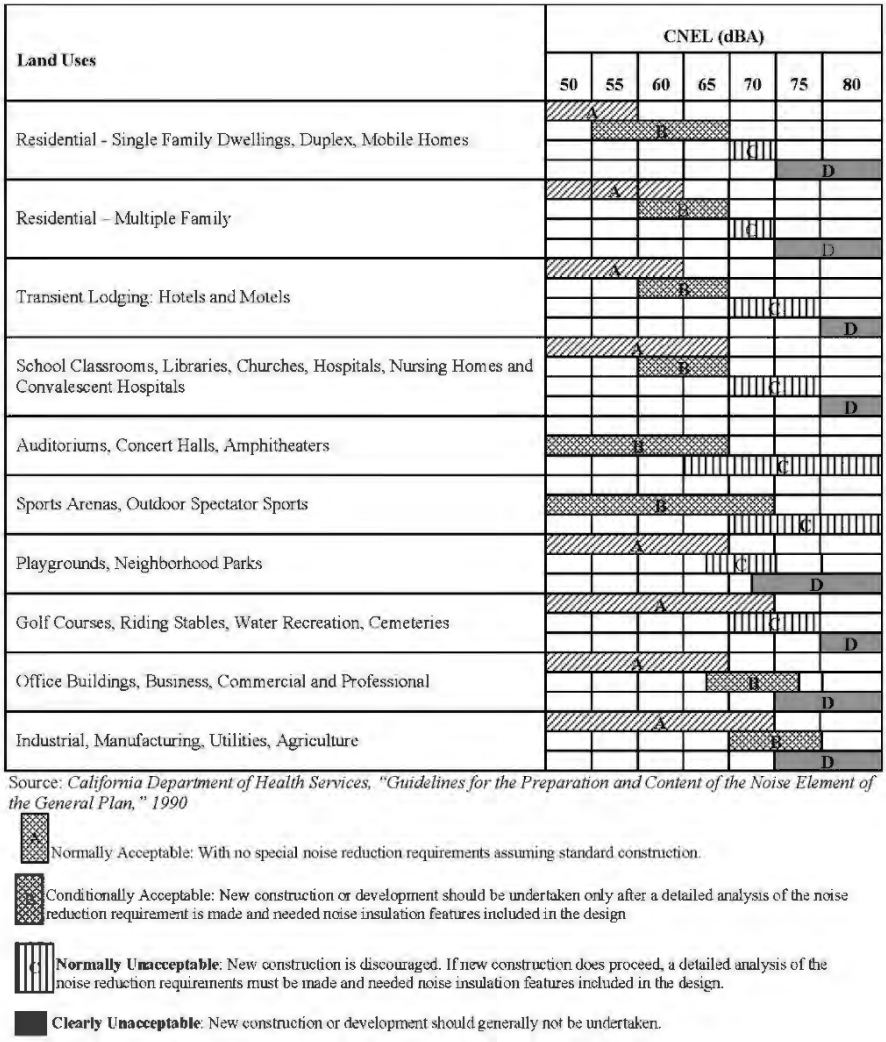

Source: *California Department of Health Services, "Guidelines for the Preparation and Content of the Noise Element of the General Plan," 1990*

A Normally Acceptable: With no special noise reduction requirements assuming standard construction.

B Conditionally Acceptable: New construction or development should be undertaken only after a detailed analysis of the noise reduction requirement is made and needed noise insulation features included in the design

C **Normally Unacceptable**: New construction is discouraged. If new construction does proceed, a detailed analysis of the noise reduction requirements must be made and needed noise insulation features included in the design.

Clearly Unacceptable: New construction or development should generally not be undertaken.

Source: Apple Valley General Plan Noise Element, Table IV-4 (Town of Apple Valley 2009).

Goal: Noise levels that are consistent with the Town's rural character and high quality of life.

Policy 1.A: The Town shall adhere to the standards of "Land Use Compatibility for Community Environments."

Program 1.A.3: The mechanical equipment associated with commercial and industrial development, including compactors, trash disposal areas, heating and air conditioning systems shall be located as far as practicable from adjacent sensitive receptors, or from lands designated on the Land Use map for noise sensitive uses.

Program 1.A.6: Commercial and industrial projects proposed adjacent to sensitive receptors, or lands designated for sensitive receptors, including residential, school or hospital sites, shall be required to submit a noise analysis in conjunction with entitlement applications.

Municipal Code. Section 9.73.050 of the Town's Municipal Code has established daytime and nighttime exterior noise limits various land uses shown in Table E.

Table E: Exterior Noise Limits

Receiving Land Use Category	Time Period	Noise Level (dBA)				
		(L_{30})[1]	(L_{25})[2]	(L_8)[3]	(L_2)[4]	(L_{MAX})[5]
Single Family Residential	10:00 p.m. – 7:00 a.m.	40	45	50	55	60
	7:00 a.m. – 10:00 p.m.	50	55	60	65	70
Multiple Dwelling Residential, Public Space	10:00 p.m. – 7:00 a.m.	45	50	55	60	65
	7:00 a.m. – 10:00 p.m.	50	55	60	65	70
Limited Commercial & Office	10:00 p.m. – 7:00 a.m.	55	60	65	70	75
	7:00 a.m. – 10:00 p.m.	60	65	70	75	80
General Commercial	10:00 p.m. – 7:00 a.m.	60	65	70	75	80
	7:00 a.m. – 10:00 p.m.	65	70	75	80	85
Light Industrial Heavy Industrial	10:00 p.m. – 7:00 a.m.	70	75	80	85	90
	7:00 a.m. - 10:00 p.m.	75	80	85	90	95

Note 1: If the measured ambient level differs from that permissible within any of the first four noise limit categories above, the allowable noise exposure standard shall be adjusted in 5 dBA increments in each category as appropriate to encompass or reflect said ambient noise level. In the event the ambient noise level exceeds the fifth noise limit category, the maximum allowable noise level under this category shall be increased to reflect the maximum ambient noise level.
Note 2: If the measurement location is on a boundary between two different zones, the noise level limit applicable to the lower noise zone plus 5 dBA shall apply.

[1] The noise standard for a cumulative period of more than 30 minutes in any hour.
[2] The noise standard plus 5 dBA for a cumulative period of more than 15 minutes in any hour.
[3] ~~####~~The noise standard plus 10 dBA for a cumulative period of more than 5 minutes in any hour.
[4] The noise standard plus 15 dBA for a cumulative period of more than 1 minute in any hour.
[5] The noise standard plus twenty (20) dBA or the maximum measured ambient level, for any period of time.

Section 9.73.060(E) of the Town's Municipal Code prohibits loading, unloading, opening, closing or other handling of boxes, crates, containers, building materials, garbage cans, or similar objects between the hours of 10:00 p.m. and 7:00 a.m. in such a manner as to cause a noise disturbance across a residential real property line or at any time to violate the provisions shown in Table E.

Section 9.73.060(F) of the Town's Municipal Code prohibits the operation or causing the operation of any tools or equipment used in construction, drilling, repair, alteration, or demolition work between weekday hours of 7:00 p.m. and 7:00 a.m., or at any time on weekends or holidays, such that the sound therefrom creates a noise disturbance across a residential or commercial real property line, except for emergency work of public service utilities or by variance issued by the Town. Where technically and economically feasible, construction activities shall be conducted in such a manner that the maximum noise levels at affected properties will not exceed those listed in Table F. In addition, all mobile or stationary internal combustion engine powered equipment or machinery shall be equipped with suitable exhaust and air intake silencers in proper working order.

Table F: Maximum Construction Noise Levels

Allowable Work (Dates and Times)	At Residential Properties						At Business Properties	
	Single-Family		Multifamily		Semi-Residential/ Commercial		Mobile Equipment[1]	Stationary Equipment[2]
	Mobile Equipment[1]	Stationary Equipment[2]	Mobile Equipment[1]	Stationary Equipment[2]	Mobile Equipment[1]	Stationary Equipment[2]		
Daily,[3] 7:00 a.m.–7:00 p.m.	75 dBA	60 dBA	80 dBA	65 dBA	85 dBA	70 dBA	–	–
Daily,[4] 7:00 p.m.–7:00 a.m.	60 dBA	50 dBA	64 dBA	55 dBA	70 dBA	60 dBA	–	–
Daily, Anytime	–	–	–	–	–	–	85 dBA	75 dBA

Source: Town of Apple Valley Municipal Code (2022).
Note: Maximum noise levels were interpreted to be the equivalent continuous sound level (L_{eq}). The hours between 7:00 a.m. and 7:00 p.m. are referred to as daytime hours and the hours between 7:00 p.m. and 7:00 a.m. are referred to as nighttime hours.
[1] Represents maximum noise levels for nonscheduled, intermittent, short-term operation (less than 10 days) of mobile equipment.
[2] Represents maximum noise levels for repetitively scheduled and relatively long-term operation (periods of 10 days or more) of stationary equipment.
[3] Daily except for Sundays and legal holidays.
[4] Daily and all day on Sundays and legal holidays.
dBA = A-weighted decibels

Section 9.73.060(F) of the Town's Municipal Code prohibits the operation or permitting the operation of any device that creates a vibration which is above the vibration perception threshold of an individual at or beyond the property boundary of the source if on private property or at 150 feet from the source if on a public space or public right-of-way. The vibration perception threshold in the Town's Municipal Code is presumed to be a motion velocity of 0.01 in/sec over the range of 1 to 100 Hertz.

Section 9.73.060(F) of the Town's Municipal Code exempts the emission of sound in the performance of emergency work.

EXISTING SETTING

Land Uses in the Project Vicinity

Existing land uses surrounding the project site include Victor Valley Community College to the north, Fresenius Medical Care Distribution and vacant land to the east, the Big Lots Distribution Center to the south, and the Walmart Distribution Center to the west.

Overview of the Existing Ambient Noise Environment

The existing noise sources in the project area include traffic noise on Navajo Road and Lafayette Street, aircraft noise from Apple Valley Airport to the southeast, and industrial activities from the industrial uses surround the project site. Noise from motor vehicles is generated by engines, the interaction between the tires and the road, and the vehicles' exhaust systems. Noise from aircraft is generated by aircraft engines from takeoffs and landings. Noise generated from industrial activities include truck parking activities and back-up alarms.

Ambient Noise Level Measurement

Short-Term Noise Measurements

One short-term (20-minute) noise level measurement was conducted on September 27, 2022, using a Larson Davis Model 831 Type 1 sound level meter. Table G shows the results of the short-term noise level measurement along with a description of the measurement locations and noise sources that occurred during the measurement. As shown in Table G, the measured average noise level at ST-1 was 43.8 dBA L_{eq} and the instantaneous maximum noise level was 55.6 dBA L_{max}. The short-term noise level measurement survey sheet is provided in Appendix A. Figure 3 shows the short-term monitoring location.

Table G: Short-Term Ambient Noise Level Measurements

Monitor No.	Location	Start Time	Noise Level (dBA)			Noise Source(s)
			L_{eq}	L_{max}	L_{min}	
ST-1	Located along the western edge of the project site bordering the Walmart distribution center on 21101 Johnson Road in Apple Valley.	10:32 a.m.	43.8	55.6	32.7	Heavy-duty truck parking lot noise such as reverse beeping and low speed traffic coming from the Walmart distribution center.

Source: Compiled by LSA (2022).

dBA = A-weighted decibel
L_{eq} = equivalent continuous sound level
L_{max} = maximum measured sound level
L_{min} = minimum measured sound level

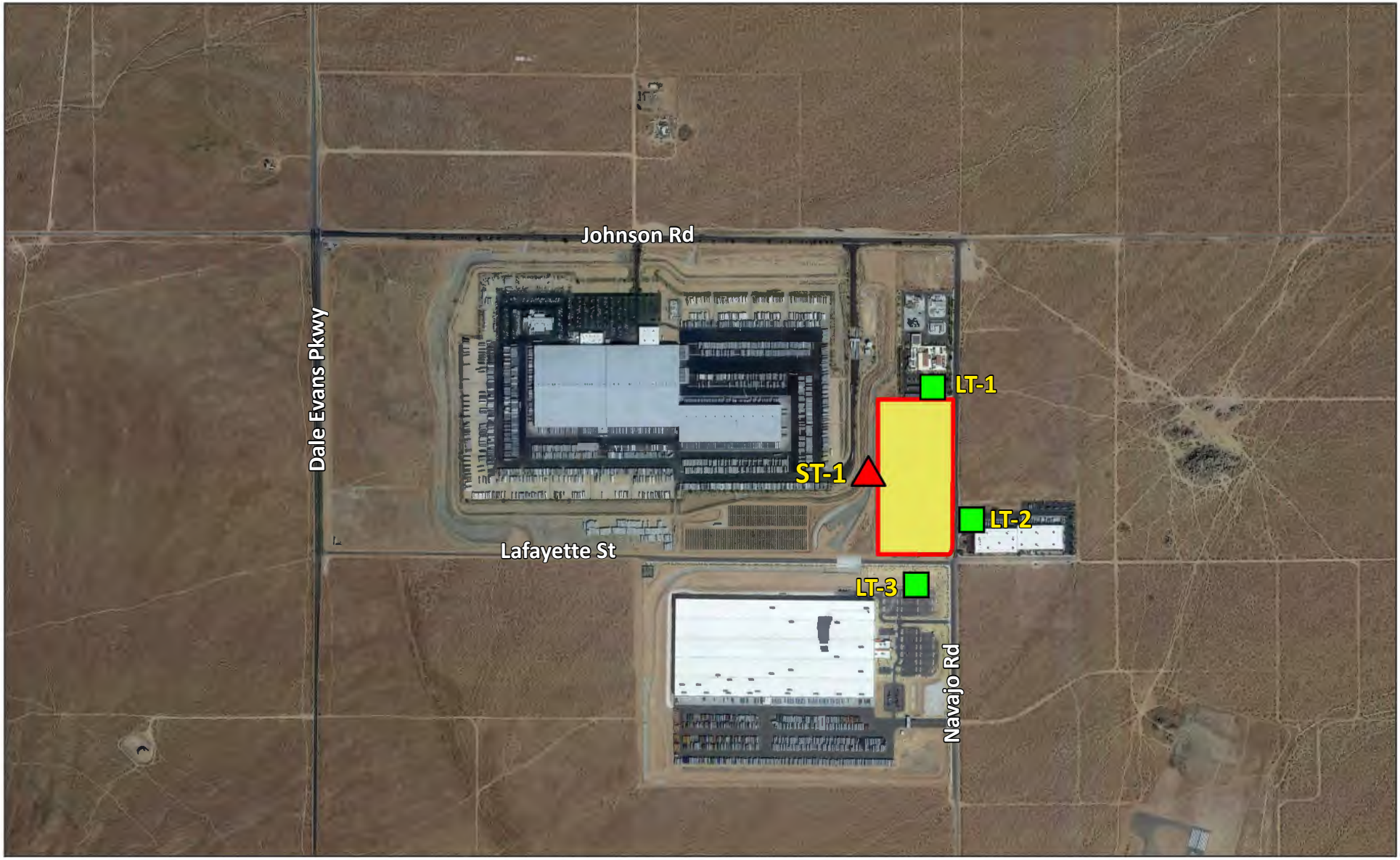

LSA

FIGURE 3

LEGEND

Project Location

ST-1 Short-term Noise Monitoring Location

LT-1 Long-term Noise Monitoring Location

N

0 150 300

FEET

SOURCE: Google Earth 2022

GTA Cold Storage Project

Noise Monitoring Locations

I:\GTS2201\G\Noise_Locs.ai (10/26/2022)

Long-Term Noise Measurements

Three long-term (24-hour) noise level measurements were conducted from September 27, 2022, to September 28, 2022, using Larson Davis Spark 706RC dosimeters. Table H summarizes the results of the long-term noise level measurements along with a description of the measurement locations and noise sources that occurred during the measurements. As shown in Table H, the daytime noise levels ranged from 42.8 to 60.2 dBA L_{eq}, and nighttime noise levels ranged from 41.7 to 57.8 dBA L_{eq}. Also, the daytime maximum instantaneous noise level ranged from 56.3 to 77.6 dBA and the nighttime instantaneous noise level ranged from 55.0 to 75.7 dBA. Also, the calculated CNEL levels at LT-1, LT-2, and LT-3 were 59.8 dBA, 61.2 dBA, and 53.1 dBA, respectively. Long-term noise level measurement survey sheets along with the detailed hourly L_{eq}, L_{max}, and minimum measured sound level (L_{min}) results are provided in Appendix A. Figure 3 shows the long-term monitoring locations.

Table H: Long-Term Ambient Noise Monitoring Results

Monitor No.	Location	Noise Level (dBA)					Noise Sources
		Daytime		Nighttime		CNEL	
		L_{eq}	L_{max}	L_{eq}	L_{max}		
LT-1	19190 Navajo Road, Apple Valley, CA 92307. Located at the southern boundary of the Victor Valley College under the solar panels.	50.0-60.2	68.4–77.6	47.3-54.8	67.5–72.3	59.8	Traffic on Navajo Road and parking lot activity.
LT-2	18925 Navajo Road, Apple Valley, CA. On a parking lot light pole of a distribution center.	46.0-59.9	66.7–75.8	47.0-57.8	70.1–75.7	61.2	Faint traffic on Navajo Road. Infrequent parking lot activity.
LT-3	Northeast corner of the Big Lots distribution center at 18925 Navajo Road, Apple Valley, CA 92307.	42.8-52.7	56.3–68.6	41.7-50.0	55.0–60.7	53.1	Faint traffic noise at intersection of Lafayette Street and Navajo Road.

Source: Compiled by LSA (2022).
Note: Long-term (24-hour) noise level measurements were conducted from September 27, 2022, to September 28, 2022.
CNEL = Community Noise Equivalent Level
dBA = A-weighted decibels
ft = foot/feet
L_{eq} = equivalent continuous sound level
L_{max} = maximum instantaneous noise level

Existing Aircraft Noise

Apple Valley Airport is 0.5 mile southeast of the project site. The Town of Apple Valley Airport Comprehensive Land Use Compatibility Plan (County of San Bernardino 1995) shows that the project site is outside the 60 dBA CNEL noise contour. Additionally, the William E. Poole Heliport is 1 mile northeast of the project area. The heliport is for private use only and would not operate frequently, based on visual inspection of the property. Therefore, the project would not expose people working in the project area to excessive noise levels, and this topic is not further discussed.

Existing Traffic Noise

The Federal Highway Administration (FHWA) Highway Traffic Noise Prediction Model (FHWA RD-77-108) (FHWA 1977) was used to evaluate traffic-related noise conditions along roadway segments in the project vicinity. This model requires various parameters, including traffic volumes, vehicle mix, vehicle speed, and roadway geometry to compute typical equivalent noise levels during daytime,

evening, and nighttime hours. The resulting noise levels are weighted and summed over 24-hour periods to determine the CNEL values. Existing average daily traffic volumes and the vehicle mix for roadways in the project area were obtained from traffic counts. Table I lists the existing traffic noise levels on roadways in the project area. These noise levels represent the worst-case scenario, which assumes that no shielding is provided between traffic and the location where the noise contours are drawn. The specific assumptions used in developing these noise levels and the model printouts are provided in Appendix B.

Table I: Existing Traffic Noise Levels

Roadway Segment	ADT	Centerline to 70 dBA CNEL (ft)	Centerline To 65 dBA CNEL (ft)	Centerline To 60 dBA CNEL (ft)	CNEL (dBA) 50 ft from the Centerline of the Outermost Lane
Johnson Road West of Dale Evans Parkway	2,841	< 50	102	220	68.9
Johnson Road Between Dale Evans Parkway and Navajo Road	2,560	58	124	266	70.2
Dale Evans Parkway Between Lafayette Street and Johnson Road	3,845	< 50	69	147	65.7
Navajo Road Between Johnson Road and Project Driveway 3	670	< 50	< 50	80	62.3
Navajo Road Between Project Driveway 3 and Project Driveway 4	670	< 50	< 50	80	62.3
Navajo Road Between Project Driveway 4 and Lafayette Street	670	< 50	< 50	80	62.3
Lafayette Street Between Dale Evans Parkway and Project Driveway 1	562	< 50	< 50	< 50	56.8
Lafayette Street Between Project Driveway 1 and Project Driveway 2	562	< 50	< 50	< 50	56.8
Lafayette Street Between Project Driveway 2 and Navajo Road	562	< 50	< 50	< 50	56.8

Source: Compiled by LSA (2022b).
Note: Traffic noise within 50 ft of the roadway centerline should be evaluated with site-specific information.
ADT = average daily traffic
dBA = A-weighted decibels
CNEL = Community Noise Equivalent Level
ft = foot/feet

IMPACTS

Short-Term Construction Noise Impacts

Two types of short-term noise impacts could occur during construction on the project site. First, construction crew commutes and the transport of construction equipment and materials to the site for the project would incrementally increase noise levels on roadways leading to the site. The pieces of construction equipment for construction activities would move on site, would remain for the duration of each construction phase, and would not add to the daily traffic volume in the project vicinity. Although there would be a relatively high single-event noise exposure potential causing intermittent noise nuisance (passing trucks at 50 ft would generate up to a maximum of 84 dBA), the effect on longer-term ambient noise levels would be small because the number of daily construction-related vehicle trips would be small compared to existing daily traffic volumes in the project area. The building construction phase would generate the most trips out of all of the construction phases, at 449 trips per day based on the California Emissions Estimator Model (CalEEMod) (Version 2020.4.0) results contained in Attachment B of the *GTS Cold Storage Project Air Quality, Greenhouse Gas Emissions, and Energy Impact Analysis Memorandum* (LSA 2022a). Roadways that would be used to access the project site include Lafayette Street, Navajo Road, Dale Evans Parkway, and Johnson Road. Based on Table I, Lafayette Street, Navajo Road, Dale Evans Parkway, and Johnson Road have estimated existing daily traffic volumes of 562, 670, 3,845, and

2,560, respectively, near the project site. Based on the information above, construction-related traffic noise would increase by up to 2.6 dBA. A noise level increase of less than 3 dBA would not be perceptible to the human ear in an outdoor environment. Therefore, no short-term construction-related impacts associated with worker commutes and transport of construction equipment and material to the project site would occur, and no noise reduction measures would be required.

The second type of short-term noise impact is related to noise generated from construction activities. Construction is performed in discrete steps, each of which has its own mix of equipment and, consequently, its own noise characteristics. The project anticipates site preparation and grading, building construction, paving, and architectural coating phases of construction. These various sequential phases change the character of the noise generated on a project site. Therefore, the noise levels vary as construction progresses. Despite the variety in the type and size of construction equipment, similarities in the dominant noise sources and patterns of operation allow construction-related noise ranges to be categorized by work phase. Table J lists the L_{max} recommended for noise impact assessments for typical construction equipment included in the *FHWA Highway Construction Noise Handbook* (FHWA 2006), based on a distance of 50 ft between the equipment and a noise receptor.

Table J: Typical Construction Equipment Noise Levels

Equipment Description	Acoustical Usage Factor[1]	Maximum Noise Level (L_{max}) at 50 ft[2]
Backhoe	40	80
Compactor (ground)	20	80
Compressor	40	80
Crane	16	85
Dozer	40	85
Dump Truck	40	84
Excavator	40	85
Flatbed Truck	40	84
Forklift	20	85
Front-End Loader	40	80
Grader	40	85
Impact Pile Driver	20	95
Jackhammer	20	85
Pickup Truck	40	55
Pneumatic Tools	50	85
Pump	50	77
Rock Drill	20	85
Roller	20	85
Scraper	40	85
Tractor	40	84
Welder	40	73

Source: *FHWA Highway Construction Noise Handbook,* Table 9.1 (FHWA 2006).
Note: The noise levels reported in this table are rounded to the nearest whole number.
[1] The usage factor is the percentage of time during a construction noise operation that a piece of construction equipment is operating at full power.
[2] The maximum noise levels were developed based on Specification 721.560 from the CA/T program to be consistent with the City of Boston, Massachusetts, Noise Code for the "Big Dig" project.
CA/T = Central Artery/Tunnel
FHWA = Federal Highway Administration
ft = foot/feet
L_{max} = maximum instantaneous noise level

Table K shows the combined noise level at 50 ft from all mobile and stationary equipment in each phase as well as the L_{eq} noise level for each equipment at 50 ft based on the quantity, reference L_{max} noise level at 50 ft, and the acoustical usage factor. As shown in Table K, construction noise levels would reach up to 89.2 L_{eq} at a distance of 50 ft from mobile construction equipment and 82.5 dBA L_{eq} at a distance of 50 ft from stationary construction equipment.

Table L shows the noise levels generated from mobile construction activities from the center of the project site during the noisiest construction phase at the closest off-site property lines surrounding the project site. As shown in Table L, the property lines to the north and west representing the college and the industrial use would be exposed to mobile construction noise levels of 66.6 dBA L_{eq} and 73.5 dBA L_{eq}, respectively. These noise levels would not exceed the Town's mobile construction noise standard of 85 dBA L_{eq} for business properties. It should be noted that the college was evaluated as a business property because the college is zoned for industrial under the NAVISP.

In addition, Table M shows the noise levels generated from stationary construction activities in the area where the warehouse building would be constructed during the noisiest construction phase at the closest off-site property lines surrounding the project site. As shown in Table M, the property lines to the north, south, and west representing the college and industrial uses would be exposed to stationary construction noise level of 81.7 dBA L_{eq}, 76.1 dBA L_{eq}, and 81.7 dBA L_{eq}, respectively. These noise levels would exceed the Town's stationary construction noise standard of 75 dBA L_{eq} for business properties. Similar to mobile construction activities, it should be noted that the college was evaluated as a business property because the college is zoned for industrial under the NAVISP. Implementation of a minimum 10 ft high portable temporary construction barrier would be required when stationary construction equipment is not shielded by the proposed warehouse building and is located within 120 ft of the project construction boundary. The 10 ft high portable temporary construction barrier would provide a noise reduction of 10 dBA and would reduce construction noise levels to below the Town's stationary construction noise standard of 75 dBA L_{eq} for business properties, as shown in Table M. The noise level reduction calculation provided by the portable temporary construction barrier when located close to the stationary construction equipment is provided in Appendix C.

Where technically and economically feasible, implementation of the noise reduction measure to erect portable temporary construction barriers for stationary construction equipment would be required to reduce stationary construction noise levels so that the Town's stationary noise standard is not exceeded at the closest property lines surrounding the project site. In addition, compliance with the Town's permitted hours of construction and equipping all mobile and stationary internal combustion engine powered equipment or machinery with suitable exhaust and air intake silencers in proper working order pursuant to Section 9.73.060(F) of the Town's Municipal Code would minimize construction noise. Therefore, no noise impacts from project construction activities would occur with the implementation of noise reduction and minimization measures.

Table K: Summary of Construction Phase, Equipment, and Noise Levels

Construction Phase	Construction Equipment	Equipment Type	Quantity	Reference Noise Level at 50 ft (dBA L_{max})	Acoustical Usage Factor[1] (%)	Noise Level at 50 ft (dBA L_{eq})	Combined Stationary Noise Level at 50 ft (dBA L_{eq})	Combined Mobile Noise Level at 50 ft (dBA L_{eq})
Site Preparation	Bulldozers	Mobile	3	85	40	85.8	--[2]	87.3
	Front-End Loaders	Mobile	4	80	40	82.0		
Grading	Excavator	Mobile	2	85	40	84.0	--[2]	89.2
	Grader	Mobile	1	85	40	81.0		
	Bulldozer	Mobile	1	85	40	81.0		
	Scraper	Mobile	2	85	40	84.0		
	Front-End Loaders	Mobile	2	80	40	79.0		
Building Construction	Crane	Stationary	1	85	16	77.0	82.5	84.9
	Forklifts	Mobile	3	85	20	82.8		
	Generator	Stationary	1	82	50	79.0		
	Front-End Loaders	Mobile	3	80	40	80.8		
	Welders	Stationary	1	73	40	69.0		
Paving	Pavers	Mobile	2	85	50	85.0	--[2]	87.6
	Paving Equipment	Mobile	2	85	20	81.0		
	Rollers	Mobile	2	85	20	81.0		
Architectural Coating	Air Compressors	Stationary	1	80	40	76.0	76.0	--[3]

Source: Compiled by LSA (2022).

[1] The acoustical usage factor is the percentage of time during a construction noise operation that a piece of construction equipment operates at full power.

[2] Stationary construction equipment is not anticipated during this construction phase.

[3] Mobile construction equipment is not anticipated during this construction phase.

dBA = A-weighted decibels

ft = foot/feet

L_{eq} = equivalent continuous sound level

L_{max} = maximum instantaneous noise level

Table L: Mobile Construction Noise Levels

Land Use	Direction	Reference Noise Level at 50 ft (dBA)	Distance[1] (ft)	Distance Attenuation (dBA)	Noise Level without Mitigation (dBA L_{eq})	Construction Noise Standard (dBA)	Exceeds Noise Standard?	Noise Level with Mitigation (dBA L_{eq})	Exceeds Noise Standard?
College	North	89.2	675	22.6	66.6	85[2]	No	--	--
Industrial	East	89.2	420	18.5	70.7	85	No	--	--
Industrial	South	89.2	700	22.9	66.3	85	No	--	--
Industrial	West	89.2	350	15.7	73.5	85	No	--	--

Source: Compiled by LSA (2022).
[1] Distance from the center of the project site to the property line of the affected land use.
[2] The college was evaluated as a business property with a mobile construction noise standard of 85 dBA L_{eq} because the college is zoned for industrial under the North Apple Valley Industrial Specific Plan (NAVISP).
dBA = A-weighted decibels
ft = foot/feet
L_{eq} = equivalent continuous sound level

Table M: Stationary Construction Noise Levels

Land Use	Direction	Reference Noise Level at 50 ft (dBA)	Distance[1] (ft)	Distance Attenuation (dBA)	Noise Level without Mitigation (dBA L_{eq})	Construction Noise Standard (dBA)	Exceeds Noise Standard?	Noise Level with Mitigation (dBA L_{eq})	Exceeds Noise Standard?
College	North	82.5	55	0.8	81.7	75[2]	Yes	71.7[3]	No
Industrial	East	82.5	230	13.3	69.2	75	No	--	--
Industrial	South	82.5	105	6.4	76.1	75	Yes	66.1[3]	No
Industrial	West	82.5	45	-0.9	83.4	75	Yes	73.4[3]	No

Source: Compiled by LSA (2022).
[1] Distance from the active construction area near the center of the project site to the property line of the affected land use.
[2] The college was evaluated as a business property with a stationary construction noise standard of 75 dBA L_{eq} because the college is zoned for industrial under the North Apple Valley Industrial Specific Plan (NAVISP).
[3] A 10 ft high portable temporary construction barrier located near the stationary construction equipment would provide a minimum noise reduction of 10 dBA.
dBA = A-weighted decibels
ft = foot/feet
L_{eq} = equivalent continuous sound level

Short-Term Construction Vibration Impacts

This construction vibration impact analysis discusses the level of human annoyance using vibration levels in VdB and assesses the potential for building damage using vibration levels in PPV (in/sec). Vibration levels calculated in RMS velocity are best for characterizing human response to building vibration, whereas vibration levels in PPV are best for characterizing damage potential.

Table N shows the reference vibration levels at a distance of 25 ft for each type of standard construction equipment from the *Transit Noise and Vibration Impact Assessment Manual* (FTA 2018). Project construction is expected to require the use of large bulldozers and loaded trucks, which would generate ground-borne vibration levels of up to 87 VdB (0.089 PPV [in/sec]) and 86 VdB (0.076 PPV [in/sec]), respectively, when measured at 25 ft.

Table N: Vibration Source Amplitudes for Construction Equipment

Equipment	Reference PPV/L_V at 25 ft	
	PPV (in/sec)	L_V (VdB)[1]
Pile Driver (Impact), Typical	0.644	104
Pile Driver (Sonic), Typical	0.170	93
Vibratory Roller	0.210	94
Hoe Ram	0.089	87
Large Bulldozer[2]	**0.089**	**87**
Caisson Drilling	0.089	87
Loaded Trucks[2]	**0.076**	**86**
Jackhammer	0.035	79
Small Bulldozer	0.003	58

Source: *Transit Noise and Vibration Impact Assessment Manual* (FTA 2018).
[1] RMS vibration velocity in decibels (VdB) is 1 µin/sec.
[2] The equipment shown in **bold** is expected to be used on site.
µin/sec = microinches per second
ft = foot/feet
FTA = Federal Transit Administration
in/sec = inches per second
L_V = vibration velocity in decibels
PPV = peak particle velocity
RMS = root-mean-square
VdB = vibration velocity decibels

The greatest vibration levels are anticipated to occur during the site preparation and grading phase. All other phases are expected to result in lower vibration levels. The distance to the nearest buildings for vibration impact analysis is measured between the nearest off-site buildings and the project boundary (assuming the construction equipment would be used at or near the project boundary), because vibration impacts normally occur within the buildings.

The formula for vibration transmission is provided below:

$$L_v dB\ (D) = L_v dB\ (25\ ft) - 30\ Log\ (D/25)$$

$$PPV_{equip} = PPV_{ref} \times (25/D)^{1.5}$$

Table O lists the projected vibration levels from various construction equipment expected to be used on the project site. As shown in Table O, the property line of the project site closest to the college to the north and industrial uses to south and west would experience a vibration level of up to 0.026 in/sec (RMS). This vibration levels would exceed the Town's vibration perception threshold of 0.01 in/sec (RMS). However, the adjacent off-site land uses near the property line of the project site are not sensitive to vibration. The areas that would be sensitive to vibration would be at the adjacent off-site buildings, which would be well beyond the Town's vibration perception threshold of 0.01 in/sec (RMS).

Table O: Potential Construction Vibration Annoyance

Land Use	Direction	Equipment/ Activity	Reference Vibration Level at 25 ft	Distance to Structure (ft)[1]	Vibration Level
			PPV (in/sec)		RMS (in/sec)[2]
College (19190 Navajo Road)	North	Large bulldozers	0.089	45	0.026
		Loaded trucks	0.076	45	0.022
Industrial (18925 Navajo Road)	East	Large bulldozers	0.089	145	0.005
		Loaded trucks	0.076	145	0.004
Industrial (18880 Navajo Road)	South	Large bulldozers	0.089	70	0.013
		Loaded trucks	0.076	70	0.012
Industrial (21101 Johnson Road)	West	Large bulldozers	0.089	45	0.026
		Loaded trucks	0.076	45	0.022

Source: Compiled by LSA (2022).
Note: The Town's vibration perception threshold is 0.01 in/sec (RMS) at the property line of the project site.
[1] Distance from the active construction area near the center of the project to the property line of the project site.
[2] The RMS value is approximately 0.71 of the peak value (Caltrans 2020).
ft = foot/feet
in/sec = inches per second
RMS = root mean square

Similarly, Table P lists the projected vibration levels from various construction equipment expected to be used on the project site. As shown in Table P, the closest building from the project construction boundary is approximately 205 ft and would experience a vibration level of up to 0.004 in/sec (PPV). This vibration level would not result in building damage because the industrial building would be constructed equivalent to or better than non-engineered timber and masonry, and vibration levels would not exceed the FTA vibration damage threshold of 0.20 in/sec (PPV). Other building structures that surround the project site would experience lower vibration levels because they are farther away and would be constructed equivalent to or better than non-engineered timber and masonry. Therefore, no construction vibration impacts would occur during project construction. No vibration reduction measures are required.

Table P: Potential Construction Vibration Damage

Land Use	Direction	Equipment/ Activity	Reference Vibration Level at 25 ft	Distance to Structure (ft)[1]	Vibration Level
			PPV (in/sec)		PPV (in/sec)
College (19190 Navajo Road)	North	Large bulldozers	0.089	240	0.003
		Loaded trucks	0.076	240	0.003
Industrial (18925 Navajo Road)	East	Large bulldozers	0.089	205	0.004
		Loaded trucks	0.076	205	0.003
Industrial (18880 Navajo Road)	South	Large bulldozers	0.089	330	0.002
		Loaded trucks	0.076	330	0.002
Industrial (21101 Johnson Road)	West	Large bulldozers	0.089	785	0.001
		Loaded trucks	0.076	785	0.000

Source: Compiled by LSA (2022).
Note: The FTA-recommended building damage threshold is 0.20 PPV [in/sec]) at the receiving non-engineered timber and masonry building.
[1] Distance from the project construction boundary to the building structure.
ft = foot/feet
FTA = Federal Transit Administration
in/sec = inches per second
PPV = peak particle velocity
VdB = vibration velocity decibels

Long-Term Traffic Noise Impacts

The FHWA Highway Traffic Noise Prediction Model (FHWA RD-77-108) (FHWA 1977) was used to evaluate traffic-related noise conditions along roadway segments in the project vicinity. This model requires various parameters, including traffic volumes, vehicle mix, vehicle speed, and roadway geometry, to compute typical equivalent noise levels during daytime, evening, and nighttime hours. The resultant noise levels are weighted and summed over 24-hour periods to determine the CNEL values. Traffic volumes and traffic mix were obtained from the traffic counts and the *GTS Cold Storage Project Trip Generation and Vehicle Miles Traveled Memorandum* (LSA 2022b). Table Q shows the existing traffic noise levels with and without project conditions. These noise levels represent the worst-case scenario, which assumes that no shielding is provided between traffic and the location where the noise contours are drawn. The specific assumptions used in developing these noise levels and the model printouts are provided in Appendix B.

Table Q shows that the proposed project would result in a project-related traffic noise increase of up to 3.2 dBA along Navajo Road between Johnson Road and Driveway 4. Although this noise increase would be barely perceptible, there are no noise-sensitive land uses adjacent to this roadway segment. Therefore, no off-site traffic noise impacts would occur, and no noise reduction measures are required.

Table Q: Existing (2022) Traffic Noise Levels Without and With Project

Roadway Segment	Without Project Traffic Conditions					With Project Traffic Conditions					
	ADT	Centerline to 70 dBA CNEL (ft)	Centerline to 65 dBA CNEL (ft)	Centerline to 60 dBA CNEL (ft)	CNEL (dBA) 50 ft from Centerline of Outermost Lane	ADT	Centerline to 70 dBA CNEL (ft)	Centerline to 65 dBA CNEL (ft)	Centerline to 60 dBA CNEL (ft)	CNEL (dBA) 50 ft from Centerline of Outermost Lane	Increase from Baseline Conditions (dBA)
Johnson Road West of Dale Evans Parkway	2,841	< 50	102	220	68.9	3,377	56	121	259	70.0	1.1
Johnson Road Between Dale Evans Parkway and Navajo Road	2,560	58	124	266	70.2	2,984	65	140	302	71.0	0.8
Dale Evans Parkway Between Lafayette Street and Johnson Road	3,845	< 50	69	147	65.7	3,957	< 50	69	148	65.8	0.1
Navajo Road Between Johnson Road and Project Driveway 3	670	< 50	< 50	80	62.3	1,094	< 50	60	129	65.5	3.2
Navajo Road Between Project Driveway 3 and Project Driveway 4	670	< 50	< 50	80	62.3	1,036	< 50	60	128	65.4	3.1
Navajo Road Between Project Driveway 4 and Lafayette Street	670	< 50	< 50	80	62.3	782	< 50	< 50	80	62.4	0.1
Lafayette Street Between Dale Evans Parkway and Project Driveway 1	562	< 50	< 50	< 50	56.8	674	< 50	< 50	< 50	56.9	0.1
Lafayette Street Between Project Driveway 1 and Project Driveway 2	562	< 50	< 50	< 50	56.8	704	< 50	< 50	< 50	56.9	0.1
Lafayette Street Between Project Driveway 2 and Navajo Road	562	< 50	< 50	< 50	56.8	732	< 50	< 50	< 50	57.0	0.2

Source: Compiled by LSA (2022).
Note: Traffic noise within 50 ft of the roadway centerline should be evaluated with site-specific information.
ADT = average daily traffic
CNEL = Community Noise Equivalent Level
dBA = A-weighted decibel
ft = foot/feet

Long-Term Stationary-Source Noise Impacts

Truck delivery and truck loading and unloading activities, truck parking activities, fire pump, and heating, ventilation, and air conditioning (HVAC) equipment associated with the project would potentially affect the existing off-site sensitive land uses. The following provides a detailed noise analysis and discussion of each stationary noise source.

Truck Delivery and Truck Loading and Unloading Activities

Truck delivery and truck loading/unloading activities for the proposed project would take place on the eastern side of the proposed warehouse building, as Figure 2 shows. These activities would take place both during daytime and nighttime hours. Noise levels generated from these activities include truck movement, docking at loading dock doors, backup alarms, air brakes, idling, and loading and unloading activities. These activities would result in a maximum noise similar to noise readings from truck delivery and truck loading and unloading activities for other projects, which would generate a noise level of 75 dBA L_{max} at 50 ft based on measurements conducted by LSA. As a worst-case scenario, truck delivery and truck-unloading activities would generate the maximum noise level for an entire 1-hour period, which would be a noise level of 75 dBA L_{eq} at 50 ft.

The office portion of the proposed warehouse building would be approximately 30 ft high and would shield the college property line to the north and the industrial property line to the south from truck delivery and truck loading/unloading activities. Also, the proposed warehouse building would be approximately 46 ft high and would shield the industrial property to the west from truck delivery and truck loading/unloading activities. The noise level reduction calculation provided by the office portion of the proposed warehouse building and the warehouse building are provided in Appendix C.

Truck Parking Activities

The project would include surface parking for truck parking. Noise generated from parking activities would include noise generated by vehicles traveling at slow speeds, engine start-up noise, car door slams, car horns, car alarms, and tire squeals. In addition, noise generated from truck parking would include backup alarms and air brakes. Representative parking activities would generate approximately 60 to 70 dBA L_{max} at 50, ft based on measurements LSA conducted.

It is estimated that there would be parking activities for up to 15 trucks based on the project trip generation from the *GTS Cold Storage Project Trip Generation and Vehicle Miles Traveled Memorandum* (LSA 2022b). It is estimated that truck parking activities would generate the maximum noise level for a cumulative period of 4 minutes in any hour based on a maximum of 15 trucks in an hour, which would be 58.2 dBA L_{eq} at 50 ft.

The proposed warehouse building would shield the industrial property line to the west from truck parking activities. The noise level reduction calculation from the proposed warehouse building is provided in Appendix C.

Refrigeration Equipment

The proposed project would include refrigeration equipment that would consist of 26 evaporator coils, 2 gas coolers, and 4 carbon dioxide (CO_2) packages on the rooftop of the proposed warehouse building. The specifications of the refrigeration equipment including the reference noise levels are provided in Appendix D.

The evaporator coils would be within the building's interior and would not generate noise at the exterior of the proposed warehouse building. The gas cooler would generate a noise level of 80 dBA at a distance of 50 ft. The CO_2 package would contain approximately 11 compressors. Each compressor would generate a noise level of 72.9 dBA L_{eq} at a distance of 1.8 meters, which would be equivalent to 63.6 dBA L_{eq} at a distance of 50 ft. A total of 11 compressors would generate a noise level of 74.0 dBA L_{eq} at a distance of 50 ft. The CO_2 package with the 11 compressors would be contained in a metal insulated enclosure that would provide a minimum noise reduction of 10 dBA. The detailed noise calculation of the refrigeration equipment at the property line of the adjacent land uses are provided in Appendix E.

Fire Pump

The proposed project would include a fire pump, which includes a six-cylinder diesel engine and would be contained in the fire pump building on the eastern side of the proposed warehouse building, as Figure 2 shows. The specifications of the fire pump including the reference noise level are provided in Appendix F. The fire pump would only be used during an emergency event and turned on briefly for maintenance and testing. The fire pump would generate a noise level of 109.2 dBA L_{eq} at 3.3 ft. At a distance of 50 ft, noise levels generated from the fire pump would be equivalent to 85.8 dBA L_{eq}. The fire pump building would be constructed of tilt-up concrete with a roof and would provide a minimum interior-to-exterior noise reduction of 25 dBA (FHWA 2011). Although Section 9.73.060(F) of the Town's Municipal Code exempts noise generated from the fire pump during an emergency event, noise levels generated during maintenance and testing would occur during daytime hours and would be required to comply with the Town's noise standard.

Heating, Ventilation, and Air Conditioning Noise

The proposed project would include up to two rooftop HVAC units at the northeast and southeast corners of the building for the office portion of the warehouse (a total of four rooftop HVAC units). The HVAC equipment could operate 24 hours per day. The specifications of the HVAC equipment, including the reference noise level, are provided in Appendix G. Each rooftop HVAC unit would generate a noise level of 62.4 dBA L_{eq} at a distance of 50 ft. Each group of two HVAC units operating simultaneously at each location would generate a noise level of 65.4 dBA L_{eq} at a distance of 50 ft.

Stationary-Source Noise Impacts Summary

Table R shows the individual stationary-source noise from truck delivery and truck loading and unloading activities, truck parking activities, refrigeration equipment, fire pump, and rooftop HVAC equipment at the college and industrial property lines along with the reference noise levels (L_{max} and L_{eq}) at a distance of 50 ft, distance from the noise source to the property line, noise reduction from distance attenuation, noise reduction from shielding, and combined stationary-source noise levels.

Table R: Stationary-Source Noise Levels

Land Use	Direction	Noise Source	Reference Noise Level at 50 ft (dBA)		Distance[1] (ft)	Distance Attenuation (dBA)	Shielding (dBA)	Noise Level (dBA L_{eq})		Combined Noise Level (dBA)	
			L_{max}	L_{eq}				L_{max}	L_{eq}	L_{max}	L_{eq}
College	North	Truck[2]	75.0	75.0	145	9.2	17[3]	48.8	48.8	62.2	64.0
		Truck Parking Activities	70.0	64.0	125	8.0	0	62.0	50.2		
		Refrigeration Equipment	--	--	--	--	--	--	58.9		
		Fire Pump	--	85.6	655	22.3	25[4]	--	38.3		
		HVAC (Northeast)	--	65.4	75	3.5	0	--	61.9		
		HVAC (Southeast)	--	65.4	1,215	27.7	0	--	37.7		
Industrial	East	Truck[2]	75.0	75.0	245	13.8	0	61.2	61.2	64.9	64.0
		Truck Parking Activities	70.0	64.0	120	7.6	0	62.4	50.6		
		Refrigeration Equipment	--	--	--	--	--	--	59.7		
		Fire Pump	--	85.6	330	16.4	25[4]	--	44.2		
		HVAC (Northeast)	--	65.4	765	23.7	0	--	41.7		
		HVAC (Southeast)	--	65.4	265	14.5	0	--	50.9		
Industrial	South	Truck[2]	75.0	75.0	200	12.0	17[3]	46.0	46.0	59.1	62.2
		Truck Parking Activities	70.0	64.0	180	11.1	0	58.9	47.1		
		Refrigeration Equipment	--	--	--	--	--	--	58.0		
		Fire Pump	--	85.6	710	23.0	25[4]	--	37.6		
		HVAC (Northeast)	--	65.4	1,265	28.1	0	--	37.3		
		HVAC (Southeast)	--	65.4	120	7.6	0	--	59.7		
Industrial	West	Truck[2]	75.0	75.0	280	15.0	17[5]	43.0	43.0	43.5	62.5
		Truck Parking Activities	70.0	64.0	515	20.3	16[6]	33.7	21.9		
		Refrigeration Equipment	--	--	--	--	--	--	62.1		
		Fire Pump	--	85.6	410	18.3	25[4]	--	42.3		
		HVAC (Northeast)	--	65.4	390	17.8	0	--	47.6		
		HVAC (Southeast)	--	65.4	390	17.8	0	--	47.6		

Source: Compiled by LSA (2022).

[1] Distance from the source to the property line of the affected land use.

[2] Truck delivery and truck loading and unloading activities.

[3] The office portion of the proposed warehouse building would be 30 ft high and provide a minimum noise reduction of 17 dBA. The noise level reduction calculation is provided in Appendix C.

[4] The fire pump would be contained in the fire pump building, which would be constructed of tilt-up concrete with a roof and would provide a minimum interior-to-exterior noise reduction of 25 dBA (FHWA 2011).

[5] The proposed 46 ft high warehouse building would provide a minimum noise reduction of 17 dBA. The noise level reduction calculation is provided in Appendix C.

[6] The proposed 46 ft high warehouse building would provide a minimum noise reduction of 16 dBA. The noise level reduction calculation is provided in Appendix C.

dBA = A-weighted decibels
ft = foot/feet
HVAC = heating, ventilation, and air conditioning
L_{eq} = equivalent continuous sound level
L_{max} = maximum instantaneous noise level

As shown in Table R, the combined stationary-source noise level at the property line of the college would be 62.2 dBA L_{max} (64.0 dBA L_{eq}). At the property line of the industrial uses to the east, south and west, the combined stationary-source noise levels would be 64.9 dBA L_{max} (64.0 dBA L_{eq}), 59.1 dBA L_{max} (62.2 dBA L_{eq}), and 43.5 dBA L_{max} (62.5 dBA L_{eq}), respectively. Noise levels at the property line of the college and industrial uses to the east, south, and west would not exceed the Town's daytime and nighttime noise standard of 75 dBA and 70 dBA, respectively. The college was evaluated using the Town's noise standard for industrial uses because the college is zoned for industrial under the NAVISP. In addition, the project would not affect the college during nighttime hours because the college would not operate during nighttime hours. Therefore, no noise impacts from project operations would occur. No noise reduction measures are required.

Long-Term Ground-Borne Noise and Vibration from Vehicular Traffic

The project would not generate vibration. In addition, vibration levels generated from project-related traffic on roadways within the project area (Navajo Road, Lafayette Street, Dale Evans Parkway, and Johnson Road) would be unusual for on-road vehicles because the rubber tires and suspension systems of on-road vehicles provide vibration isolation. Therefore, no vibration impacts from project-related operations would occur, and no vibration reduction measures are required.

MINIMIZATION MEASURES

The following measures would minimize construction noise.

- The construction contractor shall limit construction activities to between the hours of 7:00 a.m. and 7:00 p.m. on weekdays (Monday through Friday) pursuant to Section 9.73.060(F) of the Town's Municipal Code. Construction activities are prohibited outside of these hours, and on weekends and holidays.

- The construction contractor shall equip all mobile or stationary construction equipment or machinery with suitable exhaust and air intake silencers in proper working order.

NOISE REDUCTION MEASURES

Short-Term Construction Noise Impacts

Where technically and economically feasible, the following noise reduction measure would be required to reduce mobile and stationary construction noise levels.

- The construction contractor shall erect a minimum 10 ft high portable temporary construction barrier when stationary construction equipment is not shielded by the proposed warehouse building and is located within 120 ft of the project construction boundary. The barrier shall be continuous with no gaps or holes and may be any material that has a minimum Sound Transmission Class (STC) rating of 28.

Short-Term Construction Vibration Impacts

No vibration reduction measures are required.

Long-Term Aircraft Noise Impacts

No noise reduction measures are required.

Long-Term Traffic Noise Impacts

No noise reduction measures are required.

Long-Term Stationary-Source Noise Impacts

No noise reduction measures are required.

Long-Term Vibration Impacts

No vibration reduction measures are required.

REFERENCES

California Department of Transportation (Caltrans). 2020. *Transportation and Construction Vibration Guidance Manual*. April.

County of San Bernardino. 1995. Town of Apple Valley Comprehensive Airport Land Use Compatibility Plan. March. Website: http://www.sbcounty.gov/Uploads/lus/Airports/AppleValley.pdf (accessed December

Federal Highway Administration (FHWA). 1977. Highway Traffic Noise Prediction Model. FHWA-RD-77-108.

_____. 2006. *Highway Construction Noise Handbook*. Roadway Construction Noise Model. FHWA-HEP-06-015. DOT-VNTSC-FHWA-06-02. NTIS No. PB2006-109012. August.

_____. 2011. *Highway Traffic Noise: Analysis and Abatement Guidance*. FHWA-HEP-10-025. December.

Federal Transit Administration (FTA). 2018. *Transit Noise and Vibration Impact Assessment Manual*. FTA Report No. 0123. September. Website: https://www.transit.dot.gov/sites/fta.dot.gov/files/docs/research-innovation/118131/transit-noise-and-vibration-impact-assessment-manual-fta-report-no-0123_0.pdf (accessed December 2022).

Harris, Cyril M., ed. 1991. *Handbook of Acoustical Measurements and Noise Control*. 3rd ed.

LSA Associates, Inc. 2022a. *GTS Cold Storage Project Air Quality, Greenhouse Gas Emissions, and Energy Impact Analysis Memorandum*. December.

_____. 2022b. *GTS Cold Storage Project Trip Generation and Vehicle Miles Traveled Memorandum*. September 16.

Town of Apple Valley. 2009. Apple Valley General Plan Noise Element. Website: https://www.applevalley.org/home/showpublisheddocument/4894/635611242901270000 (accessed December 2022).

_____. 2022. Municipal Code. September 7.

APPENDIX A

NOISE MONITORING SURVEY SHEETS

Noise Measurement Survey

Project Number: GTS2201 Test Personnel: Kevin Nguyendo
Project Name: GTS Cold Storage Equipment: Larson Davis 831

Site Number: ST-1 Date: 9/27/22 Time: From 10:32 a.m. To 10:52 a.m.

Site Location: Located along the western boundary of the project site bordering the Walmart distribution center at 21101 Johnson Road, Apple Valley, CA 92307.

Primary Noise Sources: Heavy duty truck parking lot noise such as reverse beeping and low speed traffic coming from the Walmart distribution center.

Measurement Results

	dBA
Leq	43.8
Lmax	55.6
Lmin	32.7
Lpeak	89.5
L2	50.3
L8	47.9
L25	44.9
L50	42.0
SEL	

Atmospheric Conditions:

Maximum Wind Velocity (mph)	2.3
Average Wind Velocity (mph)	0.7
Temperature (F)	97.0
Relative Humidity (%)	27.8
Comments:	

Comments:

Traffic Description:

Roadway	# Lanes	Speeds	NB/EB Counts			SB/WB Counts		
			Auto	MT	HT	Auto	MT	HT

Diagram:

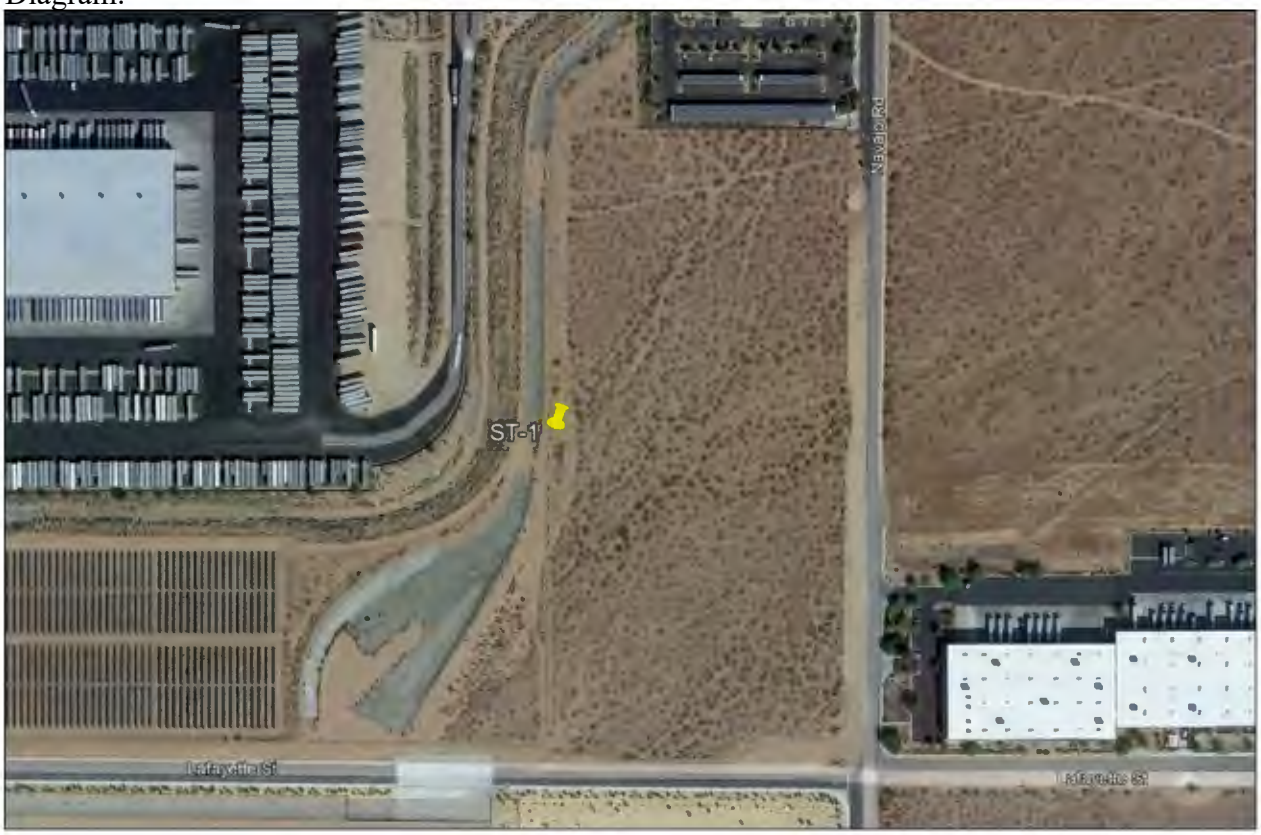

Location Photo:

Noise Measurement Survey – 24 HR

Project Number: GTS2201
Project Name: GTS Cold Storage

Test Personnel: Kevin Nguyendo
Equipment: Spark 706RC (SN:905)

Site Number: LT-1 Date: 9/27/22

Time: From 11:00 a.m. To 11:00 a.m.

Site Location: 19190 Navajo Road, Apple Valley, CA 92307. Located at the southern boundary of the Victor Valley College under the solar panels.

Primary Noise Sources: Traffic on Navajo Road. Parking lot activity.

Comments:

Photo:

Long-Term (24-Hour) Noise Level Measurement Results at LT-1

Start Time	Date	Noise Level (dBA)		
		L_{eq}	L_{max}	L_{min}
11:00 AM	9/27/22	57.3	74.1	35.5
12:00 PM	9/27/22	60.2	77.6	35.4
1:00 PM	9/27/22	57.6	71.8	35.5
2:00 PM	9/27/22	58.0	72.8	34.6
3:00 PM	9/27/22	55.1	72.4	36.0
4:00 PM	9/27/22	55.1	77.4	36.7
5:00 PM	9/27/22	56.9	73.8	39.3
6:00 PM	9/27/22	54.2	71.8	35.8
7:00 PM	9/27/22	50.0	68.4	37.5
8:00 PM	9/27/22	54.5	73.5	36.6
9:00 PM	9/27/22	53.4	69.8	38.4
10:00 PM	9/27/22	52.4	72.3	38.7
11:00 PM	9/27/22	48.6	70.2	38.0
12:00 AM	9/28/22	47.3	67.5	39.4
1:00 AM	9/28/22	50.5	68.8	40.0
2:00 AM	9/28/22	50.8	70.0	39.6
3:00 AM	9/28/22	53.8	72.2	40.9
4:00 AM	9/28/22	54.8	69.6	43.2
5:00 AM	9/28/22	53.9	71.7	44.5
6:00 AM	9/28/22	53.7	71.1	48.3
7:00 AM	9/28/22	56.6	71.9	43.8
8:00 AM	9/28/22	50.9	70.0	40.0
9:00 AM	9/28/22	53.5	71.7	38.2
10:00 AM	9/28/22	53.9	72.5	38.6

Source: Compiled by LSA Associates, Inc. (2022).
dBA = A-weighted decibel
L_{eq} = equivalent continuous sound level
L_{max} = maximum instantaneous noise level
L_{min} = minimum measured sound level

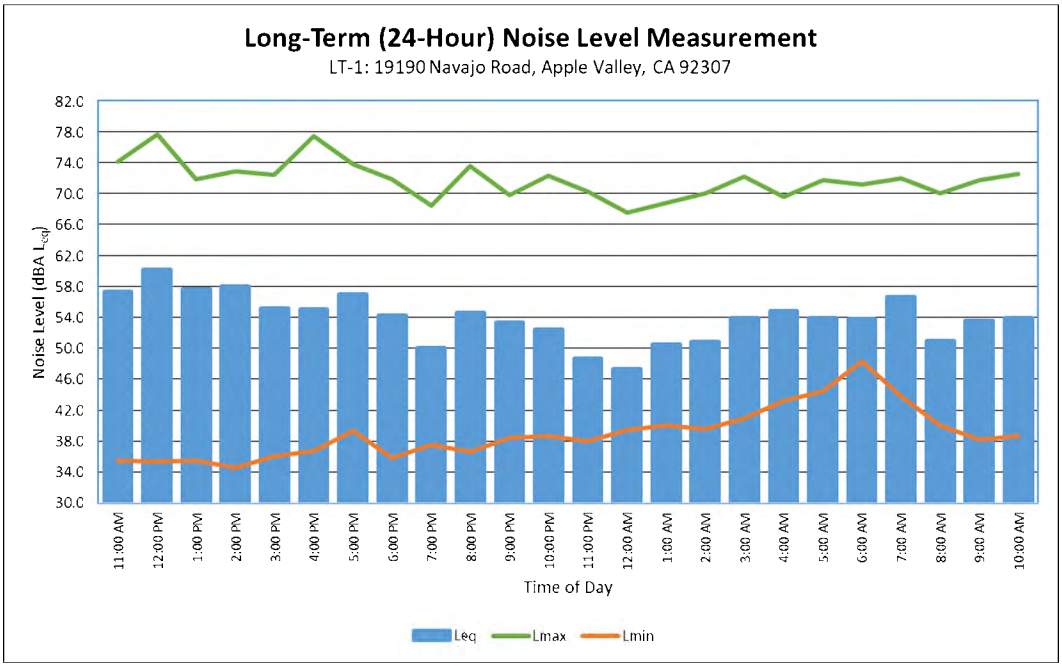

Noise Measurement Survey – 24 HR

Project Number: GTS2201
Project Name: GTS Cold Storage

Test Personnel: Kevin Nguyendo
Equipment: Spark 706RC (SN:906)

Site Number: LT-2 Date: 9/28/22

Time: From 12:00 p.m. To 12:00 p.m.

Site Location: 18925 Navajo Road, Apple Valley, CA 92307. On a parking lot light pole of a distribution center.

Primary Noise Sources: Infrequent parking lot activity. Faint traffic on Navajo Road.

Comments:

Photo:

Long-Term (24-Hour) Noise Level Measurement Results at LT-2

Start Time	Date	Noise Level (dBA)		
		L_{eq}	L_{max}	L_{min}
11:00 AM	9/27/22	54.4	70.7	39.4
12:00 PM	9/27/22	56.1	74.1	39.4
1:00 PM	9/27/22	56.5	73.0	37.8
2:00 PM	9/27/22	56.4	72.1	39.7
3:00 PM	9/27/22	59.9	75.0	43.0
4:00 PM	9/27/22	59.0	71.6	44.0
5:00 PM	9/27/22	58.4	74.4	45.9
6:00 PM	9/27/22	56.5	72.4	40.8
7:00 PM	9/27/22	46.0	66.7	38.5
8:00 PM	9/27/22	54.0	72.3	41.4
9:00 PM	9/27/22	50.7	70.7	39.6
10:00 PM	9/27/22	52.0	70.1	39.9
11:00 PM	9/27/22	47.0	70.2	38.6
12:00 AM	9/28/22	51.2	73.7	39.3
1:00 AM	9/28/22	54.2	75.3	41.5
2:00 AM	9/28/22	56.0	72.8	40.3
3:00 AM	9/28/22	57.8	75.7	41.9
4:00 AM	9/28/22	55.3	74.8	42.9
5:00 AM	9/28/22	54.9	73.7	46.3
6:00 AM	9/28/22	55.2	74.1	43.1
7:00 AM	9/28/22	55.5	75.8	40.5
8:00 AM	9/28/22	55.5	71.9	41.8
9:00 AM	9/28/22	58.1	71.4	38.8
10:00 AM	9/28/22	51.8	71.2	39.4

Source: Compiled by LSA Associates, Inc. (2022).
dBA = A-weighted decibel
L_{eq} = equivalent continuous sound level
L_{max} = maximum instantaneous noise level
L_{min} = minimum measured sound level

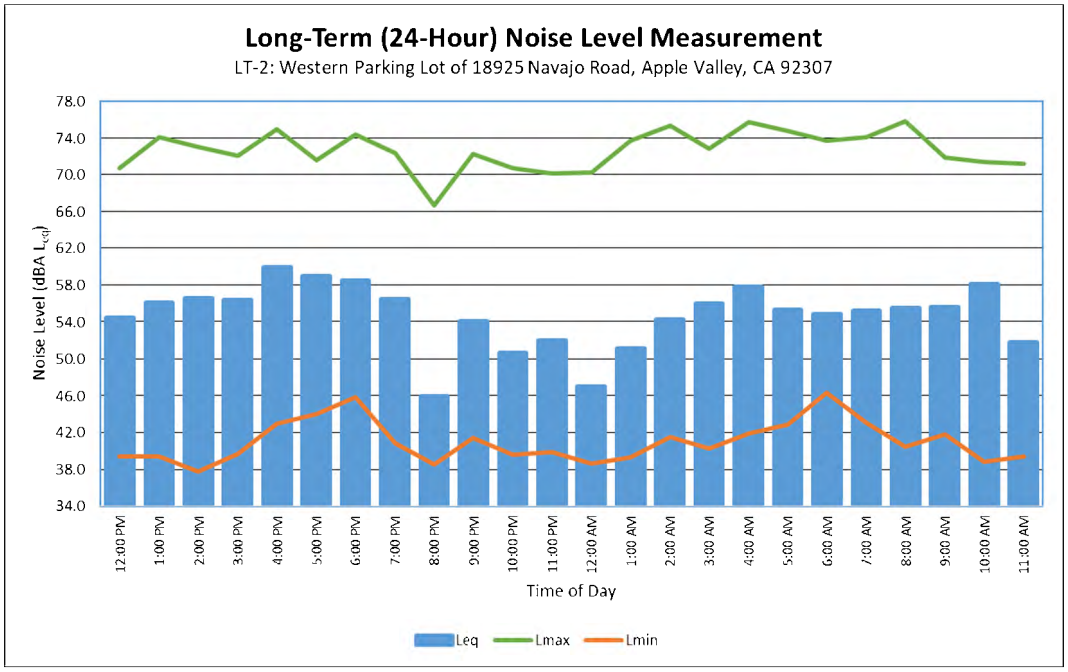

Noise Measurement Survey – 24 HR

Project Number: GTS2201
Project Name: GTS Cold Storage

Test Personnel: Kevin Nguyendo
Equipment: Spark 706RC (SN:907)

Site Number: LT-3 Date: 9/27/22

Time: From 11:00 a.m. To 11:00 a.m.

Site Location: Northeast corner of the Big Lots distribution center at 18925 Navajo Road, Apple Valley, CA 92307.

Primary Noise Sources: Faint traffic noise at the intersection of Lafayette Street and Navajo Road.

Comments:

Photo:

Long-Term (24-Hour) Noise Level Measurement Results at LT-3

Start Time	Date	Noise Level (dBA)		
		L_{eq}	L_{max}	L_{min}
11:00 AM	9/27/22	48.4	64.5	34.6
12:00 PM	9/27/22	51.4	65.6	36.5
1:00 PM	9/27/22	52.7	67.2	34.5
2:00 PM	9/27/22	48.7	68.6	34.3
3:00 PM	9/27/22	46.3	63.2	35.6
4:00 PM	9/27/22	48.4	68.5	35.0
5:00 PM	9/27/22	45.3	62.7	34.9
6:00 PM	9/27/22	45.9	60.2	34.1
7:00 PM	9/27/22	44.2	59.1	36.5
8:00 PM	9/27/22	43.3	57.9	36.2
9:00 PM	9/27/22	46.1	63.0	34.1
10:00 PM	9/27/22	45.0	58.6	36.8
11:00 PM	9/27/22	41.7	55.0	35.2
12:00 AM	9/28/22	43.9	56.4	35.9
1:00 AM	9/28/22	43.7	59.2	35.4
2:00 AM	9/28/22	42.8	55.9	34.6
3:00 AM	9/28/22	45.6	57.3	35.7
4:00 AM	9/28/22	48.7	58.8	38.0
5:00 AM	9/28/22	50.0	60.7	39.3
6:00 AM	9/28/22	47.9	58.5	41.3
7:00 AM	9/28/22	45.1	57.4	38.2
8:00 AM	9/28/22	45.6	61.5	38.3
9:00 AM	9/28/22	42.8	56.3	36.3
10:00 AM	9/28/22	49.1	61.8	34.1

Source: Compiled by LSA Associates, Inc. (2022).
dBA = A-weighted decibel
L_{eq} = equivalent continuous sound level
L_{max} = maximum instantaneous noise level
L_{min} = minimum measured sound level

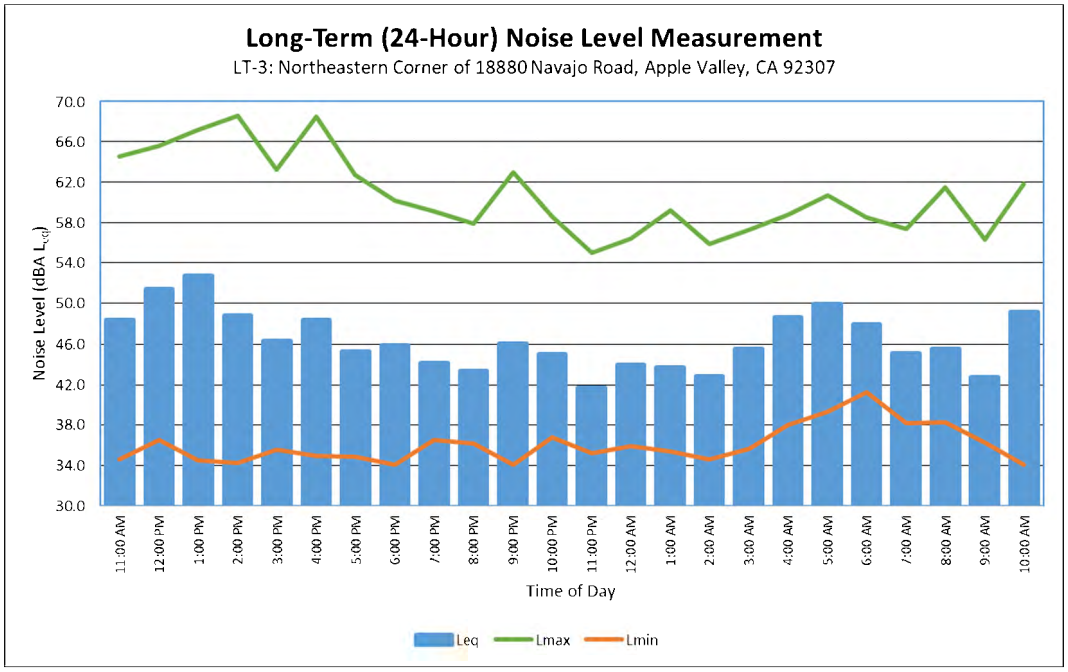

APPENDIX B

FHWA HIGHWAY TRAFFIC NOISE MODEL PRINTOUTS

TABLE Existing No Project-01
FHWA ROADWAY NOISE LEVEL ANALYSIS

RUN DATE: 10/19/2022
ROADWAY SEGMENT: Johnson Road West of Dale Evans Parkway
NOTES: GTS Cold Storage - Existing No Project

---

* * ASSUMPTIONS * *

AVERAGE DAILY TRAFFIC: 2841 SPEED (MPH): 40 GRADE: .5

TRAFFIC DISTRIBUTION PERCENTAGES

	DAY	EVENING	NIGHT
AUTOS	53.20	8.86	6.58
M-TRUCKS	6.93	0.40	0.84
H-TRUCKS	20.06	0.63	2.50

ACTIVE HALF-WIDTH (FT): 6 SITE CHARACTERISTICS: SOFT

---

* * CALCULATED NOISE LEVELS * *

CNEL AT 50 FT FROM NEAR TRAVEL LANE CENTERLINE (dB) = 68.94

DISTANCE (FEET) FROM ROADWAY CENTERLINE TO CNEL

70 CNEL	65 CNEL	60 CNEL	55 CNEL
0.0	102.0	219.5	472.7

TABLE Existing No Project-02
FHWA ROADWAY NOISE LEVEL ANALYSIS

RUN DATE: 10/19/2022
ROADWAY SEGMENT: Johnson Road Between Dale Evans Parkway and Navajo Road
NOTES: GTS Cold Storage - Existing No Project

---

* * ASSUMPTIONS * *

AVERAGE DAILY TRAFFIC: 2560 SPEED (MPH): 40 GRADE: .5

TRAFFIC DISTRIBUTION PERCENTAGES

	DAY	EVENING	NIGHT
AUTOS	41.33	6.88	5.11
M-TRUCKS	9.24	0.53	1.13
H-TRUCKS	30.94	0.97	3.87

ACTIVE HALF-WIDTH (FT): 6 SITE CHARACTERISTICS: SOFT

---

* * CALCULATED NOISE LEVELS * *

CNEL AT 50 FT FROM NEAR TRAVEL LANE CENTERLINE (dB) = 70.19

DISTANCE (FEET) FROM ROADWAY CENTERLINE TO CNEL

70 CNEL	65 CNEL	60 CNEL	55 CNEL
57.6	123.6	266.0	572.8

TABLE Existing No Project-03
FHWA ROADWAY NOISE LEVEL ANALYSIS

RUN DATE: 10/19/2022
ROADWAY SEGMENT: Dale Evans Parkway Between Lafayette Street and Johnson Road
NOTES: GTS Cold Storage - Existing No Project

---

* * ASSUMPTIONS * *

AVERAGE DAILY TRAFFIC: 3845 SPEED (MPH): 45 GRADE: .5

TRAFFIC DISTRIBUTION PERCENTAGES

	DAY	EVENING	NIGHT
AUTOS	70.27	11.70	8.69
M-TRUCKS	3.31	0.19	0.40
H-TRUCKS	4.70	0.15	0.59

ACTIVE HALF-WIDTH (FT): 12 SITE CHARACTERISTICS: SOFT

---

* * CALCULATED NOISE LEVELS * *

CNEL AT 50 FT FROM NEAR TRAVEL LANE CENTERLINE (dB) = 65.74

DISTANCE (FEET) FROM ROADWAY CENTERLINE TO CNEL

70 CNEL	65 CNEL	60 CNEL	55 CNEL
0.0	69.1	147.1	316.1

TABLE Existing No Project-04
FHWA ROADWAY NOISE LEVEL ANALYSIS

RUN DATE: 10/19/2022
ROADWAY SEGMENT: Navajo Road Between Johnson Road and Project Driveway 3
NOTES: GTS Cold Storage - Existing No Project

---

* * ASSUMPTIONS * *

AVERAGE DAILY TRAFFIC: 670 SPEED (MPH): 35 GRADE: .5

TRAFFIC DISTRIBUTION PERCENTAGES

	DAY	EVENING	NIGHT
AUTOS	53.33	8.88	6.60
M-TRUCKS	2.28	0.13	0.28
H-TRUCKS	24.66	0.77	3.07

ACTIVE HALF-WIDTH (FT): 6 SITE CHARACTERISTICS: SOFT

---

* * CALCULATED NOISE LEVELS * *

CNEL AT 50 FT FROM NEAR TRAVEL LANE CENTERLINE (dB) = 62.31

DISTANCE (FEET) FROM ROADWAY CENTERLINE TO CNEL

70 CNEL	65 CNEL	60 CNEL	55 CNEL
0.0	0.0	79.6	171.2

TABLE Existing No Project-05
FHWA ROADWAY NOISE LEVEL ANALYSIS

RUN DATE: 10/19/2022
ROADWAY SEGMENT: Navajo Road Between Project Driveway 3 and Project Driveway 4
NOTES: GTS Cold Storage - Existing No Project

---

* * ASSUMPTIONS * *

AVERAGE DAILY TRAFFIC: 670 SPEED (MPH): 35 GRADE: .5

TRAFFIC DISTRIBUTION PERCENTAGES

	DAY	EVENING	NIGHT
AUTOS	53.33	8.88	6.60
M-TRUCKS	2.28	0.13	0.28
H-TRUCKS	24.66	0.77	3.07

ACTIVE HALF-WIDTH (FT): 6 SITE CHARACTERISTICS: SOFT

---

* * CALCULATED NOISE LEVELS * *

CNEL AT 50 FT FROM NEAR TRAVEL LANE CENTERLINE (dB) = 62.31

DISTANCE (FEET) FROM ROADWAY CENTERLINE TO CNEL

70 CNEL	65 CNEL	60 CNEL	55 CNEL
0.0	0.0	79.6	171.2

TABLE Existing No Project-06
FHWA ROADWAY NOISE LEVEL ANALYSIS

RUN DATE: 10/19/2022
ROADWAY SEGMENT: Navajo Road Between Project Driveway 4 and Lafayette Street
NOTES: GTS Cold Storage - Existing No Project

---

* * ASSUMPTIONS * *

AVERAGE DAILY TRAFFIC: 670 SPEED (MPH): 35 GRADE: .5

TRAFFIC DISTRIBUTION PERCENTAGES

	DAY	EVENING	NIGHT
AUTOS	53.33	8.88	6.60
M-TRUCKS	2.28	0.13	0.28
H-TRUCKS	24.66	0.77	3.07

ACTIVE HALF-WIDTH (FT): 6 SITE CHARACTERISTICS: SOFT

---

* * CALCULATED NOISE LEVELS * *

CNEL AT 50 FT FROM NEAR TRAVEL LANE CENTERLINE (dB) = 62.31

DISTANCE (FEET) FROM ROADWAY CENTERLINE TO CNEL

70 CNEL	65 CNEL	60 CNEL	55 CNEL
0.0	0.0	79.6	171.2

TABLE Existing No Project-07
FHWA ROADWAY NOISE LEVEL ANALYSIS

RUN DATE: 10/19/2022
ROADWAY SEGMENT: Lafayette Street Between Dale Evans Parkway and Project Driveway 1
NOTES: GTS Cold Storage - Existing No Project

---

* * ASSUMPTIONS * *

AVERAGE DAILY TRAFFIC: 562 SPEED (MPH): 30 GRADE: .5

TRAFFIC DISTRIBUTION PERCENTAGES

	DAY	EVENING	NIGHT
AUTOS	65.92	10.97	8.15
M-TRUCKS	3.93	0.23	0.48
H-TRUCKS	8.93	0.28	1.11

ACTIVE HALF-WIDTH (FT): 6 SITE CHARACTERISTICS: SOFT

---

* * CALCULATED NOISE LEVELS * *

CNEL AT 50 FT FROM NEAR TRAVEL LANE CENTERLINE (dB) = 56.77

DISTANCE (FEET) FROM ROADWAY CENTERLINE TO CNEL

70 CNEL	65 CNEL	60 CNEL	55 CNEL
0.0	0.0	0.0	73.3

TABLE Existing No Project-08
FHWA ROADWAY NOISE LEVEL ANALYSIS

RUN DATE: 10/19/2022
ROADWAY SEGMENT: Lafayette Street Between Project Driveway 1 and Project Driveway 2
NOTES: GTS Cold Storage - Existing No Project

---

* * ASSUMPTIONS * *

AVERAGE DAILY TRAFFIC: 562 SPEED (MPH): 30 GRADE: .5

TRAFFIC DISTRIBUTION PERCENTAGES

	DAY	EVENING	NIGHT
AUTOS	65.92	10.97	8.15
M-TRUCKS	3.93	0.23	0.48
H-TRUCKS	8.93	0.28	1.11

ACTIVE HALF-WIDTH (FT): 6 SITE CHARACTERISTICS: SOFT

---

* * CALCULATED NOISE LEVELS * *

CNEL AT 50 FT FROM NEAR TRAVEL LANE CENTERLINE (dB) = 56.77

DISTANCE (FEET) FROM ROADWAY CENTERLINE TO CNEL

70 CNEL	65 CNEL	60 CNEL	55 CNEL
0.0	0.0	0.0	73.3

TABLE Existing No Project-09
FHWA ROADWAY NOISE LEVEL ANALYSIS

RUN DATE: 10/19/2022
ROADWAY SEGMENT: Lafayette Street Between Project Driveway 2 and Navajo Road
NOTES: GTS Cold Storage - Existing No Project

---

* * ASSUMPTIONS * *

AVERAGE DAILY TRAFFIC: 562 SPEED (MPH): 30 GRADE: .5

TRAFFIC DISTRIBUTION PERCENTAGES

	DAY	EVENING	NIGHT
AUTOS	65.92	10.97	8.15
M-TRUCKS	3.93	0.23	0.48
H-TRUCKS	8.93	0.28	1.11

ACTIVE HALF-WIDTH (FT): 6 SITE CHARACTERISTICS: SOFT

---

* * CALCULATED NOISE LEVELS * *

CNEL AT 50 FT FROM NEAR TRAVEL LANE CENTERLINE (dB) = 56.77

DISTANCE (FEET) FROM ROADWAY CENTERLINE TO CNEL

70 CNEL	65 CNEL	60 CNEL	55 CNEL
0.0	0.0	0.0	73.3

TABLE Existing with Project-01
FHWA ROADWAY NOISE LEVEL ANALYSIS

RUN DATE: 10/19/2022
ROADWAY SEGMENT: Johnson Road West of Dale Evans Parkway
NOTES: GTS Cold Storage - Existing with Project

---

* * ASSUMPTIONS * *

AVERAGE DAILY TRAFFIC: 3377 SPEED (MPH): 40 GRADE: .5

TRAFFIC DISTRIBUTION PERCENTAGES

	DAY	EVENING	NIGHT
AUTOS	51.23	8.53	6.34
M-TRUCKS	7.23	0.42	0.88
H-TRUCKS	21.95	0.69	2.73

ACTIVE HALF-WIDTH (FT): 6 SITE CHARACTERISTICS: SOFT

---

* * CALCULATED NOISE LEVELS * *

CNEL AT 50 FT FROM NEAR TRAVEL LANE CENTERLINE (dB) = 70.03

DISTANCE (FEET) FROM ROADWAY CENTERLINE TO CNEL

70 CNEL	65 CNEL	60 CNEL	55 CNEL
56.2	120.5	259.4	558.6

TABLE Existing with Project-02

FHWA ROADWAY NOISE LEVEL ANALYSIS

RUN DATE: 10/19/2022
ROADWAY SEGMENT: Johnson Road Between Dale Evans Parkway and Navajo Road
NOTES: GTS Cold Storage - Existing with Project

---

* * ASSUMPTIONS * *

AVERAGE DAILY TRAFFIC: 2984 SPEED (MPH): 40 GRADE: .5

TRAFFIC DISTRIBUTION PERCENTAGES

	DAY	EVENING	NIGHT
AUTOS	39.87	6.64	4.93
M-TRUCKS	9.52	0.55	1.16
H-TRUCKS	32.29	1.01	4.03

ACTIVE HALF-WIDTH (FT): 6 SITE CHARACTERISTICS: SOFT

---

* * CALCULATED NOISE LEVELS * *

CNEL AT 50 FT FROM NEAR TRAVEL LANE CENTERLINE (dB) = 71.02

DISTANCE (FEET) FROM ROADWAY CENTERLINE TO CNEL

70 CNEL	65 CNEL	60 CNEL	55 CNEL
65.4	140.4	302.1	650.7

TABLE Existing with Project-03
FHWA ROADWAY NOISE LEVEL ANALYSIS

RUN DATE: 10/19/2022
ROADWAY SEGMENT: Dale Evans Parkway Between Lafayette Street and Johnson Road
NOTES: GTS Cold Storage - Existing with Project

---

* * ASSUMPTIONS * *

AVERAGE DAILY TRAFFIC: 3957 SPEED (MPH): 45 GRADE: .5

TRAFFIC DISTRIBUTION PERCENTAGES

	DAY	EVENING	NIGHT
AUTOS	70.48	11.73	8.72
M-TRUCKS	3.21	0.19	0.39
H-TRUCKS	4.57	0.14	0.57

ACTIVE HALF-WIDTH (FT): 12 SITE CHARACTERISTICS: SOFT

---

* * CALCULATED NOISE LEVELS * *

CNEL AT 50 FT FROM NEAR TRAVEL LANE CENTERLINE (dB) = 65.76

DISTANCE (FEET) FROM ROADWAY CENTERLINE TO CNEL

70 CNEL	65 CNEL	60 CNEL	55 CNEL
0.0	69.4	147.8	317.5

TABLE Existing with Project-04

FHWA ROADWAY NOISE LEVEL ANALYSIS

RUN DATE: 10/19/2022
ROADWAY SEGMENT: Navajo Road Between Johnson Road and Project Driveway 3
NOTES: GTS Cold Storage - Existing with Project

---

* * ASSUMPTIONS * *

AVERAGE DAILY TRAFFIC: 1094 SPEED (MPH): 35 GRADE: .5

TRAFFIC DISTRIBUTION PERCENTAGES

	DAY	EVENING	NIGHT
AUTOS	44.71	7.44	5.53
M-TRUCKS	5.73	0.33	0.70
H-TRUCKS	30.75	0.96	3.85

ACTIVE HALF-WIDTH (FT): 6 SITE CHARACTERISTICS: SOFT

---

* * CALCULATED NOISE LEVELS * *

CNEL AT 50 FT FROM NEAR TRAVEL LANE CENTERLINE (dB) = 65.45

DISTANCE (FEET) FROM ROADWAY CENTERLINE TO CNEL

70 CNEL	65 CNEL	60 CNEL	55 CNEL
0.0	60.0	128.7	276.9

TABLE Existing with Project-05

FHWA ROADWAY NOISE LEVEL ANALYSIS

RUN DATE: 10/19/2022
ROADWAY SEGMENT: Navajo Road Between Project Driveway 3 and Project Driveway 4
NOTES: GTS Cold Storage - Existing with Project

---

* * ASSUMPTIONS * *

AVERAGE DAILY TRAFFIC: 1036 SPEED (MPH): 35 GRADE: .5

TRAFFIC DISTRIBUTION PERCENTAGES

	DAY	EVENING	NIGHT
AUTOS	42.87	7.14	5.30
M-TRUCKS	6.05	0.35	0.74
H-TRUCKS	32.48	1.01	4.06

ACTIVE HALF-WIDTH (FT): 6 SITE CHARACTERISTICS: SOFT

---

* * CALCULATED NOISE LEVELS * *

CNEL AT 50 FT FROM NEAR TRAVEL LANE CENTERLINE (dB) = 65.44

DISTANCE (FEET) FROM ROADWAY CENTERLINE TO CNEL

70 CNEL	65 CNEL	60 CNEL	55 CNEL
0.0	59.8	128.4	276.3

TABLE Existing with Project-06
FHWA ROADWAY NOISE LEVEL ANALYSIS

RUN DATE: 10/19/2022
ROADWAY SEGMENT: Navajo Road Between Project Driveway 4 and Lafayette Street
NOTES: GTS Cold Storage - Existing with Project

---

* * ASSUMPTIONS * *

AVERAGE DAILY TRAFFIC: 782 SPEED (MPH): 35 GRADE: .5

TRAFFIC DISTRIBUTION PERCENTAGES

	DAY	EVENING	NIGHT
AUTOS	56.79	9.45	7.02
M-TRUCKS	1.95	0.11	0.24
H-TRUCKS	21.12	0.66	2.66

ACTIVE HALF-WIDTH (FT): 6 SITE CHARACTERISTICS: SOFT

---

* * CALCULATED NOISE LEVELS * *

CNEL AT 50 FT FROM NEAR TRAVEL LANE CENTERLINE (dB) = 62.38

DISTANCE (FEET) FROM ROADWAY CENTERLINE TO CNEL

70 CNEL	65 CNEL	60 CNEL	55 CNEL
0.0	0.0	80.5	173.0

TABLE Existing with Project-07
FHWA ROADWAY NOISE LEVEL ANALYSIS

RUN DATE: 10/19/2022
ROADWAY SEGMENT: Lafayette Street Between Dale Evans Parkway and Project Driveway 1
NOTES: GTS Cold Storage - Existing with Project

---

* * ASSUMPTIONS * *

AVERAGE DAILY TRAFFIC: 674 SPEED (MPH): 30 GRADE: .5

TRAFFIC DISTRIBUTION PERCENTAGES

	DAY	EVENING	NIGHT
AUTOS	67.85	11.30	8.39
M-TRUCKS	3.27	0.19	0.40
H-TRUCKS	7.45	0.23	0.92

ACTIVE HALF-WIDTH (FT): 6 SITE CHARACTERISTICS: SOFT

---

* * CALCULATED NOISE LEVELS * *

CNEL AT 50 FT FROM NEAR TRAVEL LANE CENTERLINE (dB) = 56.87

DISTANCE (FEET) FROM ROADWAY CENTERLINE TO CNEL

70 CNEL	65 CNEL	60 CNEL	55 CNEL
0.0	0.0	0.0	74.4

TABLE Existing with Project-08

FHWA ROADWAY NOISE LEVEL ANALYSIS

RUN DATE: 10/19/2022
ROADWAY SEGMENT: Lafayette Street Between Project Driveway 1 and Project Driveway 2
NOTES: GTS Cold Storage - Existing with Project

---

* * ASSUMPTIONS * *

AVERAGE DAILY TRAFFIC: 704 SPEED (MPH): 30 GRADE: .5

TRAFFIC DISTRIBUTION PERCENTAGES

	DAY	EVENING	NIGHT
AUTOS	68.26	11.36	8.44
M-TRUCKS	3.13	0.18	0.38
H-TRUCKS	7.13	0.22	0.90

ACTIVE HALF-WIDTH (FT): 6 SITE CHARACTERISTICS: SOFT

---

* * CALCULATED NOISE LEVELS * *

CNEL AT 50 FT FROM NEAR TRAVEL LANE CENTERLINE (dB) = 56.93

DISTANCE (FEET) FROM ROADWAY CENTERLINE TO CNEL

70 CNEL	65 CNEL	60 CNEL	55 CNEL
0.0	0.0	0.0	75.1

TABLE Existing with Project-09
FHWA ROADWAY NOISE LEVEL ANALYSIS

RUN DATE: 10/19/2022
ROADWAY SEGMENT: Lafayette Street Between Project Driveway 2 and Navajo Road
NOTES: GTS Cold Storage - Existing with Project

---

* * ASSUMPTIONS * *

AVERAGE DAILY TRAFFIC: 732 SPEED (MPH): 30 GRADE: .5

TRAFFIC DISTRIBUTION PERCENTAGES

	DAY	EVENING	NIGHT
AUTOS	68.61	11.42	8.49
M-TRUCKS	3.01	0.17	0.37
H-TRUCKS	6.85	0.21	0.87

ACTIVE HALF-WIDTH (FT): 6 SITE CHARACTERISTICS: SOFT

---

* * CALCULATED NOISE LEVELS * *

CNEL AT 50 FT FROM NEAR TRAVEL LANE CENTERLINE (dB) = 56.97

DISTANCE (FEET) FROM ROADWAY CENTERLINE TO CNEL

70 CNEL	65 CNEL	60 CNEL	55 CNEL
0.0	0.0	0.0	75.5

APPENDIX C

NOISE REDUCTION CALCULATIONS

Temporary Construction Barrier Noise Reduction Calculation

No.	Construction Equipment Type	Land Use	Direction	Wall Height (ft)	Wall Base Elevation	Recepter Base Elevation	Receptor Height (ft)	Source Base Elevation	Source Height (ft)	Source to Barrier Distance (ft)	Receptor to Source Distance (ft)	Receptor to Barrier Distance (ft)	d1	d2	d3	delta	N	Noise Reduction	Noise Reduction Applied to Noise Analysis
1	Stationary	College	North	10	0	0	5	0	4	20	55	35	55.00909	35.35534	20.88061	1.226862	1.200386	10.7	10
2	Stationary	Industrial	South	10	0	0	5	0	4	20	105	85	105.0048	85.14693	20.88061	1.022783	1.000711	10.3	10
3	Stationary	Industrial	West	10	0	0	5	0	4	20	45	25	45.01111	25.4951	20.88061	1.364601	1.335153	10.9	10

Truck Loading/Unloading Activity Noise Reduction Calculation

No.	Activity	Land Use	Direction	Wall Height (ft)	Wall Base Elevation	Recepter Base Elevation	Receptor Height (ft)	Source Base Elevation	Source Height (ft)	Source to Barrier Distance (ft)	Receptor to Source Distance (ft)	Receptor to Barrier Distance (ft)	d1	d2	d3	delta	N	Noise Reduction	Noise Reduction Applied to Noise Analysis
1	Truck Loading/Unloading	School	North	30	0	0	5	0	4	10	145	135	145.0034	137.2953	27.85678	20.14863	19.71382	17.1	17
2	Truck Loading/Unloading	Industrial	South	30	0	0	5	0	4	10	200	190	200.0025	191.6377	27.85678	19.49196	19.07132	17.1	17
3	Truck Loading/Unloading	Industrial	West	46	0	0	5	0	4	10	280	270	280.0018	273.0952	43.17407	36.2675	35.48485	17.1	17

Truck Parking Activity Noise Reduction Calculation

No.	Activity	Land Use	Direction	Wall Height (ft)	Wall Base Elevation	Recepter Base Elevation	Receptor Height (ft)	Source Base Elevation	Source Height (ft)	Source to Barrier Distance (ft)	Receptor to Source Distance (ft)	Receptor to Barrier Distance (ft)	d1	d2	d3	delta	N	Noise Reduction	Noise Reduction Applied to Noise Analysis
1	Truck Loading/Unloading	Industrial	West	46	0	0	5	0	4	135	515	380	515.001	382.2054	141.3825	8.586931	8.401624	16.7	16

APPENDIX D

REFRIGERATION EQUIPMENT SPECIFICATIONS

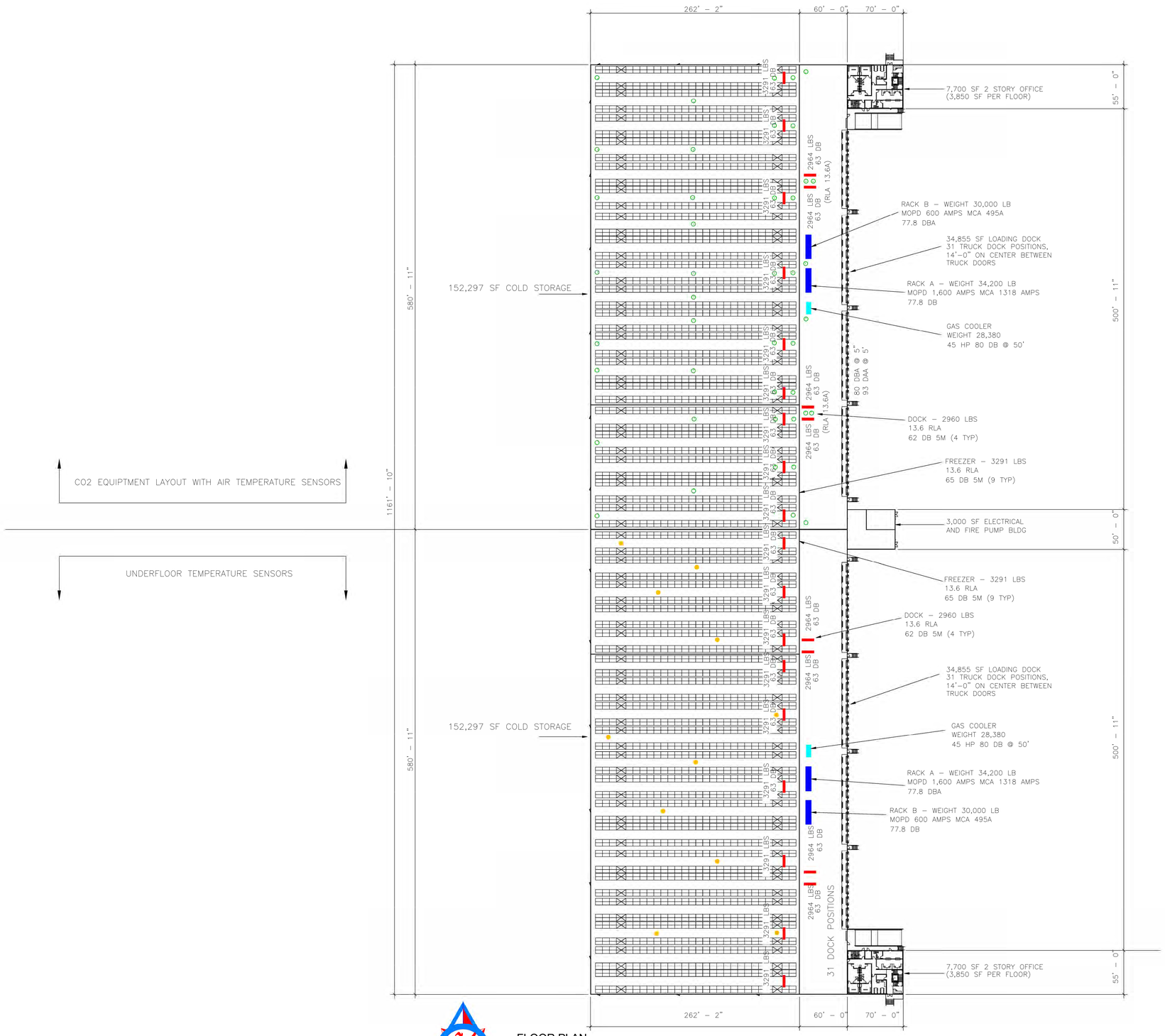

FLOOR PLAN
SCALE: 1/64" = 1' 0"

SYMBOL LEGEND

	EVAPORATOR COIL
	CO2 PACKAGE
	GAS COOLER
	AIR TEMPERATURE SENSOR
	UNDERFLOOR TEMPERATURE SENSOR

NOTES:

EACH SIDE OF FACILITY WILL BE A MIRROR IMAGE.

BUILDING INFORMATION:
GROSS SITE ACREAGE: 817,939 SF / 18.78 AC
NET SITE ACREAGE: 770,134 SF / 17.68 AC
MAX FLOOR AREA (50%): 385,067 SF

BUILDING COVERAGE:
~~SOUTH BUILDING:~~
OFFICE: 3,850 SF
LOADING DOCK: 34,855 SF
COLD STORAGE: 152,297 SF
~~191,002 SF~~

SOUTH BUILDING:
OFFICE: 3,850 SF
LOADING DOCK: 34,855 SF
COLD STORAGE: 152,297 SF
~~191,002 SF~~

EQUIPMENT ROOM: 3,000 SF
~~TOTAL: 385,004 SF (49.99%)~~

FOR INFORMATION ONLY
ISSUE DATE: PRELIMINARY

STATEMENT OF CONFIDENTIALITY: THE DESIGN AND INFORMATION CONTAINED HEREIN ARE THE PROPERTY OF AND PROPRIETARY TO PERMACOLD ENGINEERING, INC. AND MAY NOT BE SOLD, USED, REPRODUCED, OR COPIED BY ANY MEANS IN WHOLE OR IN PART, FOR ANY PURPOSE WHATSOEVER, WITHOUT THE EXPRESSED WRITTEN PERMISSION OF PERMACOLD ENGINEERING, INC. © PERMACOLD ENGINEERING. ALL RIGHTS RESERVED.

FISHER CONSTRUCTION GROUP
Design • Build • Equip • Perform
www.fishercg.com

GTS LEASING
GREEN TRUCKING SOLUTIONS LLC

REV.	DATE	REVISION SCHEDULE	BY
0	--	----	--

PermaCold Engineering, Inc.
2464 N.E. ARGYLE PORTLAND, OR 97211
(503)-284-9190 OR (800)-455-8885
FAX (503)-284-9192
www.PermaCold.com

DRAWN BY: [--]
CHECKED BY: [--]
APPROVED BY: [--]
DATE: 9/14/2022
SCALE: AS NOTED
SCALE: 1/64" = 1' INCH

FLOOR PLAN

International Institute of Ammonia Refrigeration MEMBER
IARW MEMBER
International Association for Refrigeration Warehouse Construction MEMBER

PROJECT NUMBER: ##R-####

SHEET NUMBER: R2.0
REV. 0

ENGINEER'S STAMP:

Compressor Reference Noise Level

P_suc / P_dis [bar / bar]	MODEL	SOUND PRESSURE 1.8 m [dbA]	SOUND PRESSURE 5.0 m [dbA]
26 / 90	CD 150M	46,9	38,0
	CD 180H	46,9	38,0
	CD 180M	47,9	39,0
	CD 300H	47,9	39,0
	CD 300M	48,9	40,0
	CD 350H	48,9	40,0
	CD 350M	49,9	41,0
	CD 360H	49,9	41,0
	CD 360M	50,9	42,0
	CD 380H	50,9	42,0
	CD4 55-4.7M	53,9	45,0
	CD4 75-4,7H	53,9	45,0
	CD4 75-6.4M	54,9	46,0
	CD4 90-6.4H	54,9	46,0
	CD4 75-7.3M	54,9	46,0
	CD4 90-7.3H	54,9	46,0
	CD4 90-9.2M	55,9	47,0
	CD4 90-9.2H	55,9	47,0
	CD 1200M	60,9	52,0
	CD 1400H	60,9	52,0
	CD 1500M	61,4	52,5
	CD 2000H	61,4	52,5
	CD 2000M	61,9	53,0
	CD 2400H	61,9	53,0
	CD 2500H	62,4	53,5
	CD 2500M	62,4	53,5
	CD 3000H	62,9	54,0
	CD 3001M	62,9	54,0
	CD 3401H	63,9	55,0
	CD 3501H	63,9	55,0
	CD 3501M	64,9	56,0
	CD 4501H	64,9	56,0
	CD 5001M	65,9	57,0
	CD 5201M	66,9	58,0
	CD6 601-40M	70,9	62,0
	CD6 701-40H	70,9	62,0
	CD6 701-45M	71,9	63,0
	CD6 801-45H	71,9	63,0
	CD6 801-53M	72,9	64,0
	CD6 901-59M	73,9	65,0
12 / 30	CD 150M	47,4	38,5
	CD 180M	47,4	38,5
	CD 300M	48,4	39,5
	CD 350M	48,4	39,5
	CD 360M	49,4	40,5
	CD4 55-4.7M	54,4	45,5
	CD4 75-6.4M	55,4	46,5
	CD4 75-7.3M	55,4	46,5
	CD4 90-9.2M	56,4	47,5
	CD 1200B	61,9	53,0
	CD 1500B	62,4	53,5
	CD 2001B	62,9	54,0
	CD 2501B	65,4	56,5
	CD 3001B	65,9	57,0
	CD 3501B	66,4	57,5
	CD 4001B	66,9	58,0
	CD6 501-40B	71,4	62,5
	CD6 501-45B	72,4	63,5
	CD6 501-53B	73,4	64,5
	CD6 601-59B	74,5	65,6
	CD6 701-65B	75,6	66,7
	CD6 801-82B	76,7	67,8
	CD6 901-99B	77,8	68,9
12 / 90	CD2S300	49,9	41,0
	CD2S350	50,4	41,5
	CD2S360	50,9	42,0
	CD2S550	60,9	52,0
	CD2S750	61,2	52,3
	CD2S900	61,3	52,4
	CD2S1200	61,4	52,5
	CD2S1500	61,9	53,0
	CD2S2500	62,4	53,5
	CD2S3000	62,9	54,0
	CD2S3500	63,4	54,5

Note: Comma represents a period (decimal place).

estimated data

APPENDIX E

REFRIGERATION EQUIPMENT NOISE CALCULATIONS

Refrigeration Equipment Noise Calculations

No.	Refrigeration Equipment	Reference Noise Level (dBA L_{eq})	No. of Units	Total Reference Noise Level	Shielding (dBA)	Noise Level with Shielding (dBA L_{eq})	Reference Distance (ft)		Distance to the Property Line (ft)					Noise Level at the Property Line (dBA L_{eq})			
									North	South	East	West		North	South	East	West
1	Rack A1	63.6	11	74.0	10.0	64.0	50.0		964.9	378.5	365.3	328.9		38.3	46.4	46.7	47.7
2	Rack B1	63.6	11	74.0	10.0	64.0	50.0		1008.0	335.6	364.7	328.9		37.9	47.5	46.8	47.7
3	Gas Cooler 1	80.0	1	80.0	5.0	75.0	50.0		936.9	422.2	365.8	329.7		49.5	56.5	57.7	58.6
4	Rack B2	63.6	11	74.0	10.0	64.0	50.0		281.0	1062.6	629.2	327.8		49.0	37.5	42	47.7
5	Rack A2	63.6	11	74.0	10.0	53.6	50.0		324.1	1019.5	594.7	327.9		37.4	27.4	32.1	37.3
6	Gas Cooler 2	80.0	1	80.0	5.0	75.0	50.0		367.3	991.9	573.5	328.9		57.7	49.0	53.8	58.6
													Total Noise Level:	**58.9**	**58.0**	**59.7**	**62.1**

APPENDIX F

FIRE PUMP SPECIFICATIONS

Capitol Pump Resources

5891 Mullen Road SE • Lacey, WA 98503
(360) 493-1830
Fax: (360) 923-1841
Email: hcaulfield@capitolpump.com

Project: GTS Apple Valley
Apple Valley, CA

Contractor: J.F. Ahern Co.
Fond du Lac, WI

Submittal
Table of Contents

Page

10AEF16 – 3000 GPM @ 80 PSI – 324 Hp/1760 RPM

2-4	Itemize lists of Components
5	Peerless 10AEF16 Fire Pump Curve
6-7	Pump Performance Datasheet
8	Construction Datasheet
9-10	Dimensional Data
11-14	Air Release Valve
15-17	Suction & Discharge Gauges
18	Angle Hose Valve
19-20	10'' Grooved Test Header
21-22	8'' Main Relief Valve
23-24	8'' x 12'' Waste Cone
25-41	Clarke JW6H-UFADD0-D Fire Pump Engine with PLD
42-49	Engine Accessories
50-61	Eaton FD120 Diesel Fire Pump Controller Data
62-64	Grundfos CR 5-7 Jockey Pump
65-70	EATON XTJP Jockey Pump Controller

Submitted by ***Capitol Pump Resources***

Customer Price Sheet Total Only

Project name	GTS Apple Valley	Quote Number / ID	2289556
Customer	J.F. Ahern Co.	Model / Stages	10AEF16 / 1
Tag Number	001	Flow, rated	3,000 USgpm
Customer ref. / PO		Differential head / pressure, rated	80.00 psi
		Speed, rated	1775 rpm

Itemized List of Components
Total

Qty	Unit Price	Extended Price	Lead Time	Total	Notes

Pump

Qty	Description
1	*10AEF16*
	Fire Pump System
	Mount
	Mounting type: Mounted on base with driver
	Pump
	Pump model: 10AEF16
	Selected pump listing: FM/UL Listed
	Casing material: Cast Iron
	Suction flange: 125lb ANSI Flat faced
	Discharge flange: 250lb ANSI Flat faced
	Casing ring: Bismuth tin bronze
	Impeller material: Silicon Brass
	Impeller Wear Ring: Integral
	Rotation: Clockwise (RH)
	Bearing solution: Single row outboard grease lube bearing
	Shaft material: Carbon steel
	Shaft sleeve material: 304SS with O-ring
	Lantern Ring: Lantern ring with seal piping
	Packing type: Standard
	Nameplate units: US
	Tests & Certifications
	Performance Tests
	Non-witnessed Performance Test
	Hydrostatic Pressure Tests
	Non-witnessed Hydrostatic Test
	Accessories
	Fire Pump Accessories
	Flush mount test header assembly
	Test header alert: There are no test header assemblies available above 2000USgpm

Driver

Qty	Description
1	**Fire Pump System**
	Pump
	Baseplate design: Non drip rim
	Driver Type
	Engine manufacturer: All engines
	Engine cooling type: Heat exchanger cooled
	Pressure limiting: Yes
	Pressure limiting engine type: Discharge

Driver

Qty	Description
	Emission tier: Emission Tier 3
	Engine: Clarke JW6H-UFADD0-D, 324hp, 1760rpm, Emission tier level T3
	Engine voltage: 12 Volt DC
	Cooling loop: FM Steel Cooling loop
	Drive shaft: UL Listed drive-shaft, flywheel adapter, companion flange, & guard
	Water jacket heater voltage: 230/240 VAC
	Flexible exhaust connector: 6" 150# Flex Exhaust Standard Size
	Battery kits: 12 V Battery kit (Lead acid dry batteries, rack, and cables)
	EIEO Silencer: Residential grade

Engine selection derate based on 3000 ft. elevation and 117 degrees.

Controller

Qty	Description
1	Base mounted controller adapter: No
	CONTROLLER TO SHIP DIRECT
	Controller brand: All manufacturers
	Controller voltage: 120 V
	Controller charger voltage: 12 V
	Controller frequency: 50/60 Hz
	Direct Ship Controller: Yes
	Controller type: Eaton FD120 , 110/220V, 5060hz
	Enclosure: - NEMA 2
	Enclosure type: NEMA Type 2
	Miscellaneous
	-S1 Fuel Level Switch, 16 Inch

Accessories

Qty	Description
1	Tank standard: UL 142
	Wall type: Double wall
	42 in Mounting legs: Yes
	Fuel tank selected: UL Listed, Double wall 359gal
	Leak sensor: Yes
	Direct reading fuel gauge: Gauge, Krueger, 350 - 359 Gal.
	Fuel System Selected: Fuel system, 0.5"w 4" Standard ventilation, Double Wall, Listing: UL
	Jockey pump casing relief valve: Valve, casing relief, Kunkle, 0.75", 176-240psi
	Air release valve: Air Release Valve, ClaVal 0.5", 300psi MWP, Listing: UL/FM
	Gauge: -14InHg/290psi Suction, 0-600psi Discharge
	Main relief valve: Valve, relief angle, Cla-Val, 8" ANSI flange, 125lb ANSI, Pilot operated, 20-200psi, 250psi MWP, Listing: UL/FM
	Overflow cone: Cla-Val 8" x 12", 150lb x 150lb
	Hose valve head: 10", Grooved, 2000-3000USgpm, 400psi MWP, 8 outlets, Cla-Val
	Hose valve: Valve, hose angle, 2.5" NPT internal thread, National standard, 300psi MWP, Listing: UL/FM
	Ball valve/drain: Valve, ball, 0.5", 600psi MWP

Jockey Pump

Qty	Description
1	Jockey pump supply: Grundfos CR
	Frequency: 60 Hz
	Phase: Three
	Voltage: 208 V
	Flow rate: Flow rated: 30 USgpm
	Total discharge head: Total discharge head: 85.00 psi

Jockey Pump

Qty	Description
	Direct Ship Jockey Pump: No
	Jockey pump selected: CR 5-7-3ph/3Hp 182TC Fr Duty point: 25USgpm, 77.1psi, Shutoff pressure: 97.4psi, 208V, Oval flange, HQQE Seal type
	Jockey pump companion flange kit: None

Jockey Pump Controller

Qty	Description
1	JOCKEY PUMP CONTROLLER TO SHIP DIRECT
	Jockey pump controller required: Yes
	Manufacturer: Eaton
	Voltage: 200-208 V
	Frequency: 60 Hz
	Direct ship jockey pump controller: Yes
	Jockey pump controller selected: Eaton Controller XTJP, Jockey Touch - Across the Line, 3.00hp, 200-208V, 3Ph, 60hz
	Enclosure: - NEMA 2
	Enclosure type: NEMA Type 2

Commercial

Qty	Description
1	Shipping Container: Skid with bird cage
	Incoterms 2020: EXW
	Named Place
	Named Place: Seller's Facility

CLARKE®

FIRE PUMP MODEL: JW6H-UFADD0
Heat Exchanger Cooled
Raw Water Charge Cooling
Tier 3 Emissions Certified

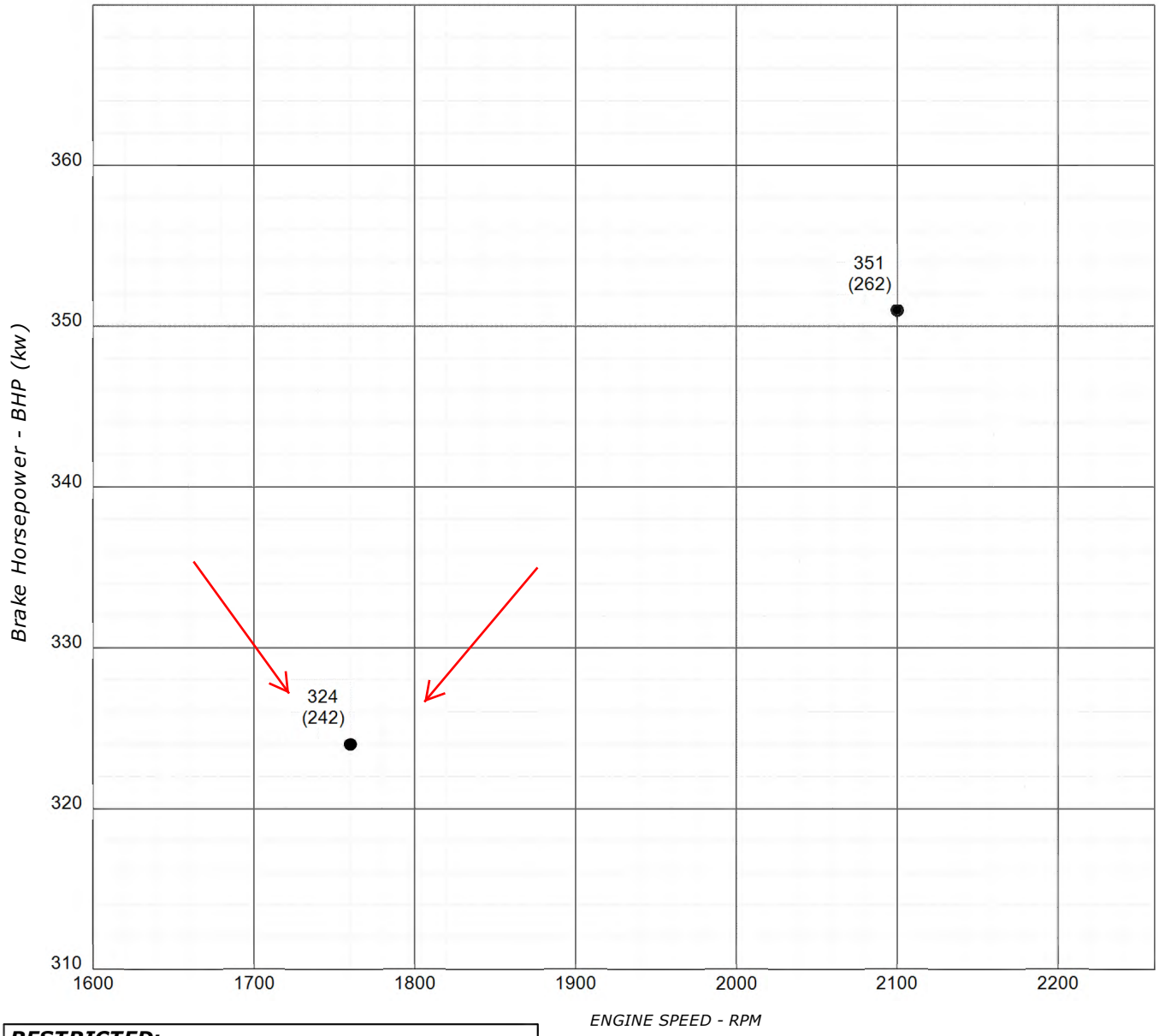

RESTRICTED:
Use only for Stand-By Fire Pump Applications

NAMEPLATE BHP (MAXIMUM PUMP LOAD)

ENGINE PERFORMANCE:
STANDARD CONDITIONS: (SAE J1349, ISO 3046)
77°F (25°C) AIR INLET TEMPERATURE
29.61 IN. (752.1MM) HG BAROMETRIC PRESSURE
#2 DIESEL FUEL (SEE C13940)

Kevin Kunkler 18AUG08

THIS DRAWING AND THE INFORMATION HEREIN ARE OUR PROPERTY AND MAY BE USED BY OTHERS ONLY AS AUTHORIZED BY US. UNPUBLISHED -- ALL RIGHTS RESERVED UNDER THE COPYRIGHT LAWS.

CREATED	DATE CREATED
KTF	08/14/08

ENGINE MODEL JW6H-UFADD0

DRAWING NO.	REV
C132685	A

JW6H-UFADD0
INSTALLATION & OPERATION DATA (I&O)

Basic Engine Description

Engine Manufacturer	John Deere Co.
Ignition Type	Compression (Diesel)
Number of Cylinders	6
Bore and Stroke - in (mm)	4.66 (118) X 5.35 (136)
Displacement - in³ (L)	549 (9)
Compression Ratio	16.0:1
Valves per cylinder	
Intake	2
Exhaust	2
Combustion System	Direct Injection
Engine Type	In-Line, 4 Stroke Cycle
Fuel Management Control	Electronic, High Pressure Common Rail
Firing Order (CW Rotation)	1-5-3-6-2-4
Aspiration	Turbocharged
Charge Air Cooling Type	Raw Water Cooled
Rotation, viewed from front of engine, Clockwise (CW)	Standard
Engine Crankcase Vent System	Open
Installation Drawing	D716
Weight - lb (kg)	2094 (950)

Customer responsible for keeping room temperature below 77 degrees

Power Rating	1760	2100
Nameplate Power - HP (kW) [1]	324 (242)	351 (262)

Cooling System	1760	2100
Engine Coolant Heat - Btu/sec (kW)	325 (343)	287 (303)
Engine Radiated Heat - Btu/sec (kW)	21.8 (23)	23.7 (25)
Heat Exchanger Minimum Flow - [C051387]		
60°F (15°C) Raw H_2O - gal/min (L/min)	27 (102)	30 (114)
100°F (37°C) Raw H_2O - gal/min (L/min)	41 (155)	45 (170)
Heat Exchanger Maximum Cooling Raw Water - [C051387]		
Inlet Pressure - psi (bar)	60 (4.1)	
Flow - gal/min (L/min)	80 (303)	
Typical Engine H_2O Operating Temp - °F (°C)	180 (82.2) - 195 (90.6)	
Thermostat		
Start to Open - °F (°C)	180 (82.2)	
Fully Opened - °F (°C)	201 (93.9)	
Engine Coolant Capacity - qt (L)	25.9 (24.5)	
Coolant Pressure Cap - lb/in² (kPa)	15 (103)	
Maximum Engine Coolant Temperature - °F (°C)	221 (105)	
Minimum Engine Coolant Temperature - °F (°C)	160 (71.1)	
High Coolant Temp Alarm Switch - °F (°C)	235 (113) - 241 (116)	

Electric System - DC	Standard		Optional	
System Voltage (Nominal)	12		24	
Battery Capacity for Ambients Above 32°F (0°C)				
Voltage (Nominal)	12	{C07633}	12	{C07633}
Qty. Per Battery Bank	1		2	
SAE size per J537	8D		8D	
CCA @ 0°F (-18°C) per J537	1200		1200	
Reserve Capacity - Minutes per J537	430		430	
Battery Cable Circuit, Max Resistance - ohm	0.0017		0.0017	
Battery Cable Minimum Size				
0-120 in. Circuit Length [2]	00		00	
121-160 in. Circuit Length [2]	000		000	
161-200 in. Circuit Length [2]	0000		0000	
Charging Alternator Maximum Output - Amp,	40	{C071363}	55	{C071365}
Starter Cranking Amps, Rolling - @60°F (15°C)	440	{RE520634}	326	{C07820}

JW6H-UFADD0
INSTALLATION & OPERATION DATA (I&O)

see exhaust sizing program at clarkfire.com for proper exhaust sizing.

Exhaust System (Single Exhaust Outlet)	1760	2100
Exhaust Flow - ft.³/min (m³/min)	1622 (45.9)	1878 (53.2)
Exhaust Temperature - °F (°C) (corrected to 77°F)	745 (396)	816 (436)
Maximum Allowable Back Pressure - in H_2O (kPa)	16 (4)	16 (4)
Minimum Allowable Back Pressure - in H_2O (kPa)		
Minimum Exhaust Pipe Dia. - in (mm) ³	6 (152)	6 (152)

Fuel System	1760	2100
Fuel Consumption - gal/hr (L/hr)	16.2 (61.3)	19 (71.9)
Fuel Return - gal/hr (L/hr)	48.8 (185)	46 (174)
Fuel Supply - gal/hr (L/hr)	65.0 (246)	65.0 (246)
Fuel Pressure - lb/in² (kPa)	16.2 (112) - 19 (131)	
Minimum Line Size - Supply - in.	.50 Schedule 40 Steel Pipe	
Pipe Outer Diameter - in (mm)	0.848 (21.5)	
Minimum Line Size - Return - in.	.375 Schedule 40 Steel Pipe	
Pipe Outer Diameter - in (mm)	0.675 (17.1)	
Maximum Allowable Fuel Pump Suction Lift with clean Filter - in H_2O (mH_2O)	80 (2)	
Maximum Allowable Fuel Head above Fuel pump, Supply or Return - ft (m)	6.6 (2)	
Fuel Filter Micron Size	2 (Secondary)	

Customer responsible for assuring proper combustible air is available

Heater System	Standard
Engine Coolant Heater	
Wattage (Nominal)	2500
Voltage - AC, 1 Phase	230 (+5%, -10%)
Part Number	{C122195}

Air System	1760	2100	
Combustion Air Flow - ft.³/min (m³/min)	744 (21.1)	825 (23.4)	
Air Cleaner	Standard		Optional
Part Number	{C03244}		{C03330}
Type	Indoor Service Only, with Shield		Canister, Single-Stage
Cleaning method	Washable		Disposable
Air Intake Restriction Maximum Limit			
Dirty Air Cleaner - in H_2O (kPa)	14 (3.5)		14 (3.5)
Clean Air Cleaner - in H_2O (kPa)	7 (1.7)		7 (1.7)
Maximum Allowable Temperature (Air To Engine Inlet) - °F (°C)	130 (54.4)		

Lubrication System	
Oil Pressure - normal - lb/in² (kPa)	37 (255) - 41 (283)
Low Oil Pressure Alarm Switch - lb/in² (kPa) to	21 (145) - 41 (283)
In Pan Oil Temperature - °F (°C)	190 (87.8) - 220 (104)
Total Oil Capacity with Filter - qt (L)	30.1 (28.5)

Lube Oil Heater	Optional
Wattage (Nominal)	150
Voltage	240V (+5%, -10%)
Part Number	{C04431}

Performance	1760	2100
BMEP - lb/in² (kPa)	266 (1830)	241 (1660)
Piston Speed - ft/min (m/min)	1569 (478)	1873 (571)
Mechanical Noise - dB(A) @ 1m	C133382 - Reference Noise data on Engine Page at www.clarkefire.com	
Power Curve	C132685 - Reference Power Curve on Engine Page at www.clarkefire.com	

NOTE: This engine is intended for indoor installation or in a weatherproof enclosure. ¹ Derate 3% per every 1000 ft. 304.8m above 300 ft. 91.4m and derate 1% for every 10°F 5.55 °C above 77°F 25°C. ² Positive and Negative Cables Combined Length. ³ Minimum Exhaust Pipe Diameter is based on: 15 feet of pipe, one 90° elbow, and one Industrial silencer. A Back-pressure flow analysis must be performed on the actual field installed exhaust system to assure engine maximum allowable back pressure is not exceeded. See Exhaust Sizing Calculator on www.clarkefire.com. { } indicates component reference part number.

CLARKE®

JW6H (JDFP-06WA,06WR)
ENGINE MATERIALS AND CONSTRUCTION

Air Cleaner
Type..... Indoor Usage Only
Oiled Fabric Pleats
Material..... Surgical Cotton, Aluminum Mesh

Air Cleaner - Optional
Type..... Canister
Material..... Pleated Paper
Housing..... Enclosed

Camshaft
Material..... Cast Iron, Chill Hardened
Location..... In Block
Drive..... Gear, Spur
Type of Cam..... Ground

Charge Air Cooler
Type..... Jacket Water Cooled-JW6H-30, 38 (06WA) [illegible] 58, H8, 60, AAM8, AA80, ADB0, ADD0, ADF0, ADJ0, AD70, AD80
Materials (in contact with raw water)
Tubes..... 90/10 CU/NI
Headers ..... 36500 Muntz
Covers ..... 83600 Red Brass
Plumbing ..... 316 Stainless Steel/ Brass
90/10 Silicone

Coolant Pump
Type..... Centrifugal
Drive..... Gear

Coolant Thermostat
Type..... Full Blocking
Qty..... 2

Cooling Loop (Galvanized)
Tees, Elbows, Pipe..... Galvanized Steel
Ball Valves..... Brass ASTM B 124
Solenoid Valve..... Brass
Pressure Regulator..... Bronze
Strainer..... Cast Iron (1/2"- 1" Loops)
or Bronze (1.25" - 2" Loops)

Cooling Loop (Sea Water)
Tees, Elbows, Pipe..... 316 Stainless Steel
Ball Valves..... 316 Stainless Steel
Solenoid Valve..... 316 Stainless Steel
Pressure Regulator/Strainer..... Cast Brass ASTM B176 C87800

Cooling Loop (316SS)
Tees, Elbows, Pipe..... 316 Stainless Steel
Ball Valves..... 316 Stainless Steel
Solenoid Valve..... 316 Stainless Steel
Pressure Regulator/Strainer..... 316 Stainless Steel

Connecting Rod
Type..... I-Beam Taper
Material..... Forged Steel Alloy

Crank Pin Bearings
Type..... Precision Half Shell
Number..... 1 Pair Per Cylinder
Material..... Wear-Guard

Crankshaft
Material..... Forged Steel
Type of Balance..... Dynamic

Cylinder Block
Type..... One Piece with Non-Siamese Cylinders
Material..... Cast Iron Alloy

Cylinder Head
Type..... Slab 2 Valve
Material..... Cast Iron

Cylinder Liners
Type..... Centrifugal Cast, Wet Liner
Material..... Alloy Iron Plateau, Honed

Valves
Type..... Poppet
Arrangement..... Overhead Valve
Number/Cylinder..... 1 intake/1 exhaust
Operating Mechanism..... Mechanical Rocker Arm
Type of Lifter..... Large Head
Valve Seat Insert..... Replaceable

Fuel Pump
Type..... Piston
Drive..... Cam Lobe

Heat Exchanger
Type..... Tube & Shell
Materials
Tube& Headers..... Copper
Shell..... Copper
Electrode..... Zinc

Injection Pump
Type..... In-Line
Drive..... Gear

Lubrication Cooler
Type..... Plate

Lubrication Pump
Type..... Gear
Drive..... Gear

Main Bearings
Type..... Precision Half Shells
Material..... Steel Backed-Aluminum Lined

Piston
Type and Material..... Aluminum Alloy with Reinforced
Top Ring Groove
Cooling..... Oil Jet Spray

Piston Pin
Type..... Full Floating - Offset

Piston Rings
Number/Piston..... 3
Top..... Keystone Barrel Faced -
Plasma Coated
Second..... Tapered Cast Iron
Third..... Chromium Faced

Rating Specific Emissions Data

Nameplate Rating Information

Clarke Model	**JW6H-UFADD0**
Power Rating (BHP/kW)	**324/242**
Certified Speed (RPM)	**1760**

Refer to **Rating Data** section on page 2 for emissions output values

Rating Specific Emissions Data - John Deere Power Systems

Rating Data

Rating	6090HFC48	
Certified Power(kW)	298	
Rated Speed	2200	
Vehicle Model Number	OEM (Clarke Fire Pump-Emergency)	
Units	g/kW-hr	g/hp-hr
NOx	3.63	2.71
HC	0.10	0.07
NOx + HC	N/A	N/A
Pm	0.10	0.07
CO	0.6	0.4

Certificate Data

Engine Model Year	2022
EPA Family Name	NJDXL13.5103
EPA JD Name	650HAA
EPA Certificate Number	NJDXL13.5103-009
CARB Executive Order	
Parent of Family	6135HF485A
Units	g/kW-hr
NOx	3.31
HC	0.11
NOx + HC	N/A
Pm	0.10
CO	0.6

* The emission data listed is measured from a laboratory test engine according to the test procedures of 40 CFR 89 or 40 CFR 1039, as applicable. The test engine is intended to represent nominal production hardware, and we do not guarantee that every production engine will have identical test results. The family parent data represents multiple ratings and this data may have been collected at a different engine speed and load. Emission results may vary due to engine manufacturing tolerances, engine operating conditions, fuels used, or other conditions beyond our control.

This information is property of Deere & Company. It is provided solely for the purpose of obtaining certification or permits of Deere powered equipment. Unauthorized distribution of this information is prohibited.

Emissions Results by Rating run on Apr-05-2022

DATUMS:

-A- - MOUNTING FACE OF FLYWHEEL

-B- - ENGINE CRANKSHAFT HORIZONTAL CENTERLINE

-C- - ENGINE CRANKSHAFT VERTICAL CENTERLINE

- CENTER OF GRAVITY OF ENGINE

- CLOCKWISE ROTATION WHEN VIEWED FROM FRONT OF ENGINE

CAUTION:

ALL PLUMBING MUST BE SUPPORTED
AND/OR ISOLATED SO THAT NO WEIGHT
OR STRESS IS APPLIED TO ANY ENGINE COMPONENT

ATTENTION

REFER TO THE SPECIFIC MODEL
"INSTALLATION AND OPERATION DATA"
FOR INSTALLATION GUIDELINES

DO NOT SCALE

"TRWA" (TURBOCHARGED w/ RAW WATER AFTERCOOLING) MODELS	JW6H-UFADD0

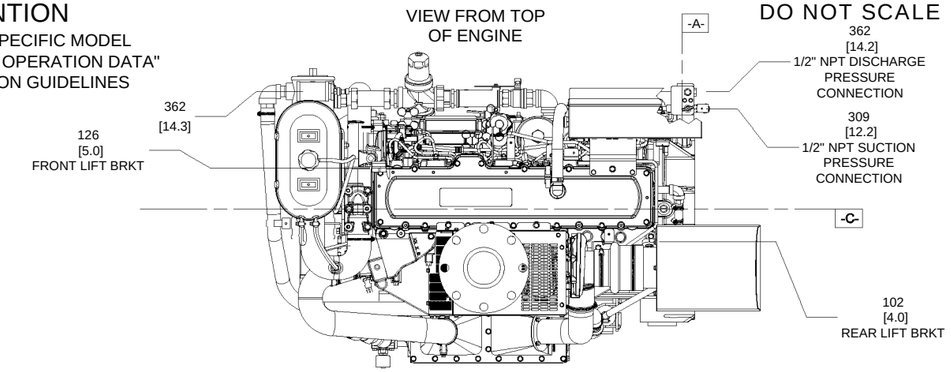

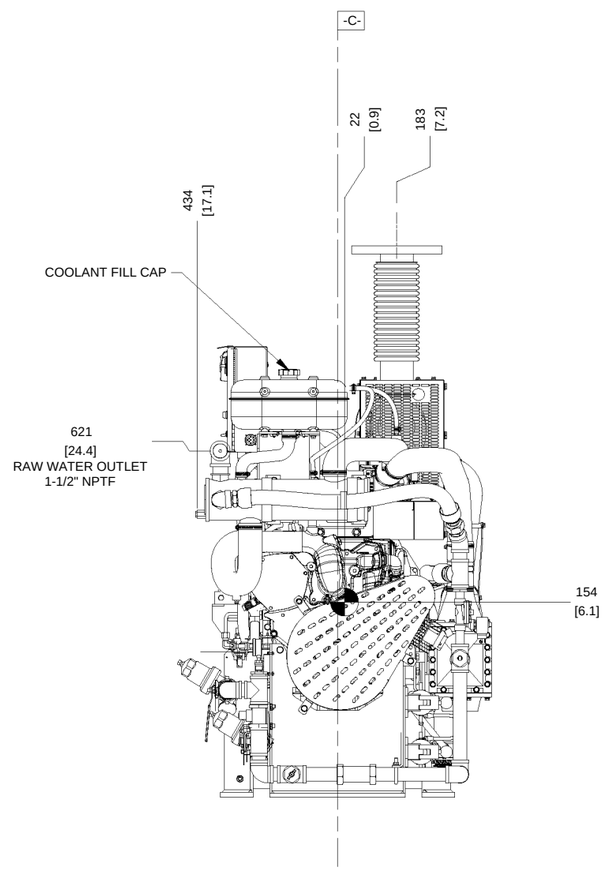

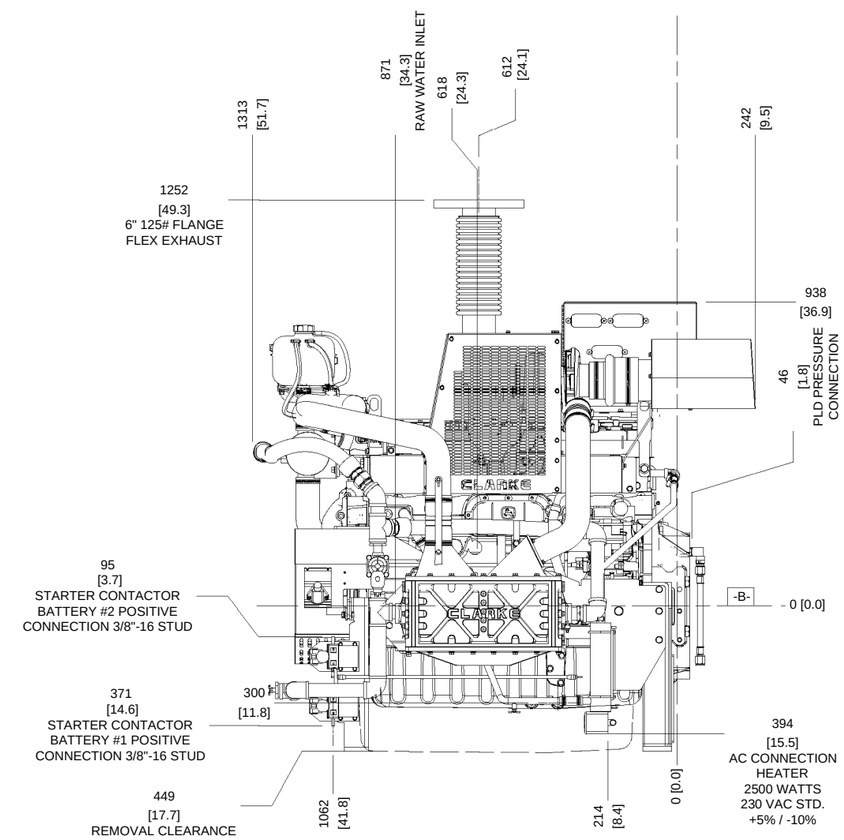

DRAWING SUBJECT
TO CHANGE
WITHOUT NOTICE

REV	DESCRIPTION	ECN#	DWN	APVD	DATE
D	UPDATED FOOT GEOMETRY SEE PG. 2	4275	KFB		20OCT15
E	UPDATED TO SHOW INDICATING PLATES	4359	KFB		10DEC15
F	ADDED DIMS TO ENGINE LIFTING BRACKETS	5061	MDM		27JUN17
G	ADDED GLAND PLATE DETAIL, REMOVED 115 VAC OPTION	5236/5145	ECK		29NOV17
H	UPDATED TOLERANCE, LOGO, & DIMENSION PRECISION	5393	NMM		15MAY18
J	EXHAUST HEIGHT DIMENSION WAS 51.1"	5650	SAN	NMM	06FEB19

GENERAL TOLERANCES
UNLESS OTHERWISE SPECIFIED, ALL DIMENSIONS ARE IN MILLIMETERS [INCHES] AND MAY VARY ± 9.5 [0.38]

THIS DRAWING AND THE INFORMATION HEREON ARE OUR PROPERTY AND MAY BE USED BY OTHERS ONLY AS AUTHORIZED BY US. UNPUBLISHED--ALL RIGHTS RESERVED UNDER THE COPYRIGHT LAWS.

YES / NO
CONTROLLED DRAWING

CLARKE®

DRWN	DPOTTKOTTER
DATE	06OCT14
ENGR	ACRISTOFARO
MATERIAL	
ASSEMBLY	
NAME	INSTALLATION DRAWING, FIRE PUMP ENGINE JW6H TIER 3 PLD MODEL
PART NO.	D716
REV	J
SCALE	NTS
UNITS	MM [INCH]
PAGE	1 OF 2

DO NOT SCALE

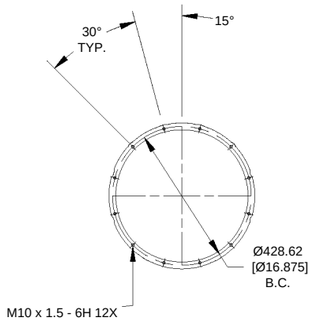

SAE #3
FLYWHEEL HOUSING

DETAIL DATUM -A-

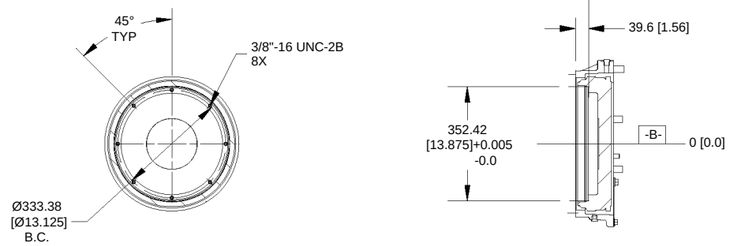

SAE 11.5 FLYWHEEL WITH
129 TEETH AND 8/10 PITCH RING GEAR

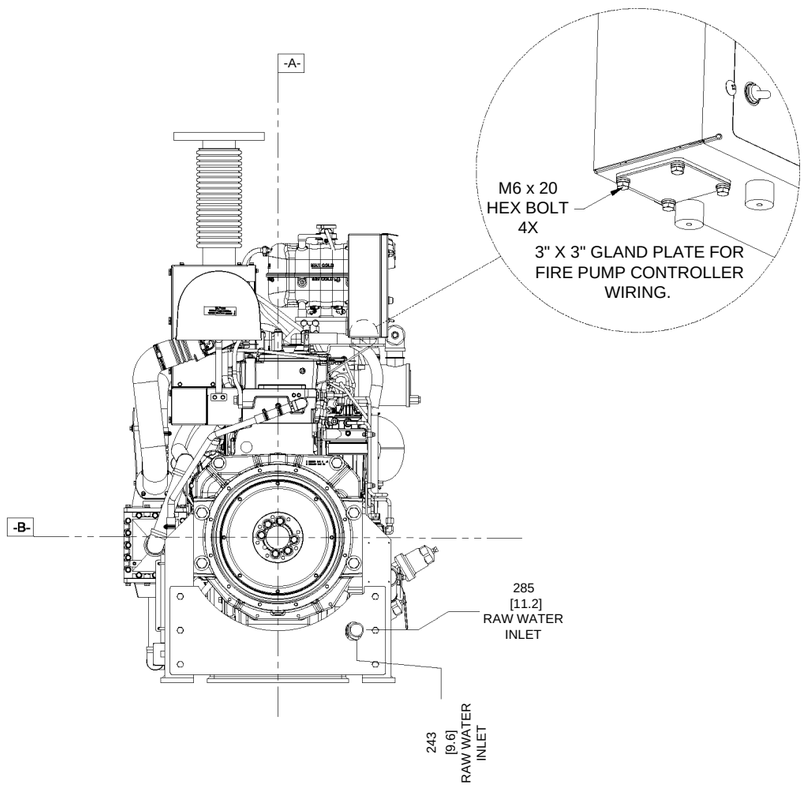

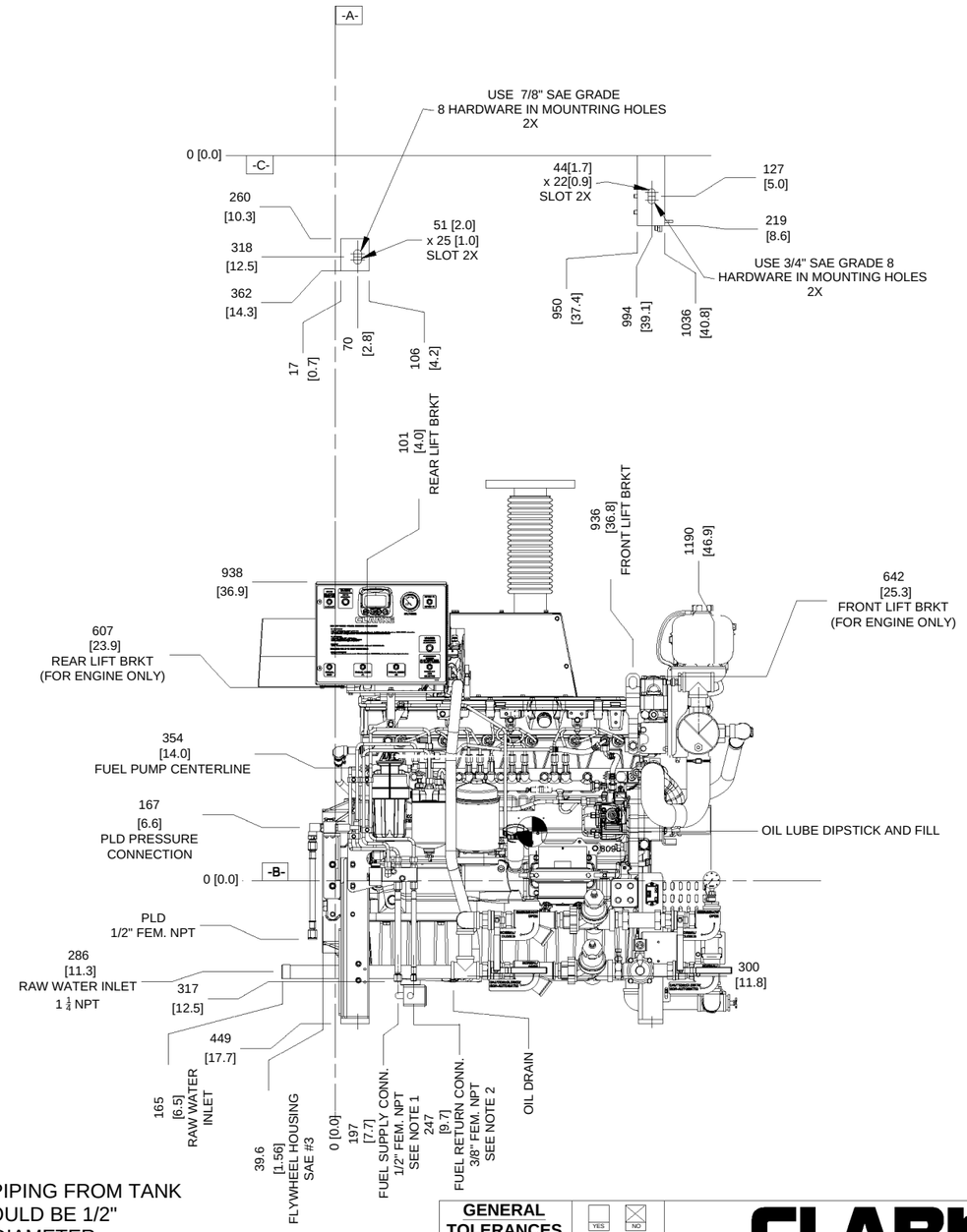

FOR ENGINE SPECIFIC OPTIONS
SEE www.CLARKEFIRE.com

NOTES:
1. FUEL SUPPLY PIPING FROM TANK TO ENGINE SHOULD BE 1/2" MINIMUM PIPE DIAMETER.
2. FUEL RETURN PIPING FROM ENGINE TO TANK SHOULD BE 3/8" MINIMUM PIPE DIAMETER.

DRAWING SUBJECT TO CHANGE WITHOUT NOTICE

GENERAL TOLERANCES
UNLESS OTHERWISE SPECIFIED, ALL DIMENSIONS ARE IN MILLIMETERS [INCHES] AND MAY VARY ± 9.5 [0.38]

THIS DRAWING AND THE INFORMATION HEREON ARE OUR PROPERTY AND MAY BE USED BY OTHERS ONLY AS AUTHORIZED BY US. UNPUBLISHED--ALL RIGHTS RESERVED UNDER THE COPYRIGHT LAWS.

YES / NO CONTROLLED DRAWING

CLARKE®

DRWN	DPOTTKOTTER
DATE	06OCT14
ENGR	ACRISTOFARO
MATERIAL	
ASSEMBLY	
NAME	INSTALLATION DRAWING, FIRE PUMP ENGINE JW6H TIER 3 PLD MODEL
PART NO.	D716
REV	J
SCALE	NTS
UNITS	MM [INCH]
PAGE	2 OF 2

SUCTION PRESSURE LIMITING CONTROL SENSING LINE CONNECTION

THE SINGLE SUCTION PRESSURE LIMITING CONTROL SENSING LINE SHALL BE CONNECTED IN THE IMMEDIATE REGION UPSTREAM OF THE PUMP INLET.

DISCHARGE PRESSURE LIMITING CONTROL SENSING LINE CONNECTION

THE SINGLE DISCHARGE PRESSURE CONTROL SENSING LINE SHALL BE CONNECTED IN THE REGION BETWEEN THE PUMP DISCHARGE FLANGE & THE CHECK VALVE.

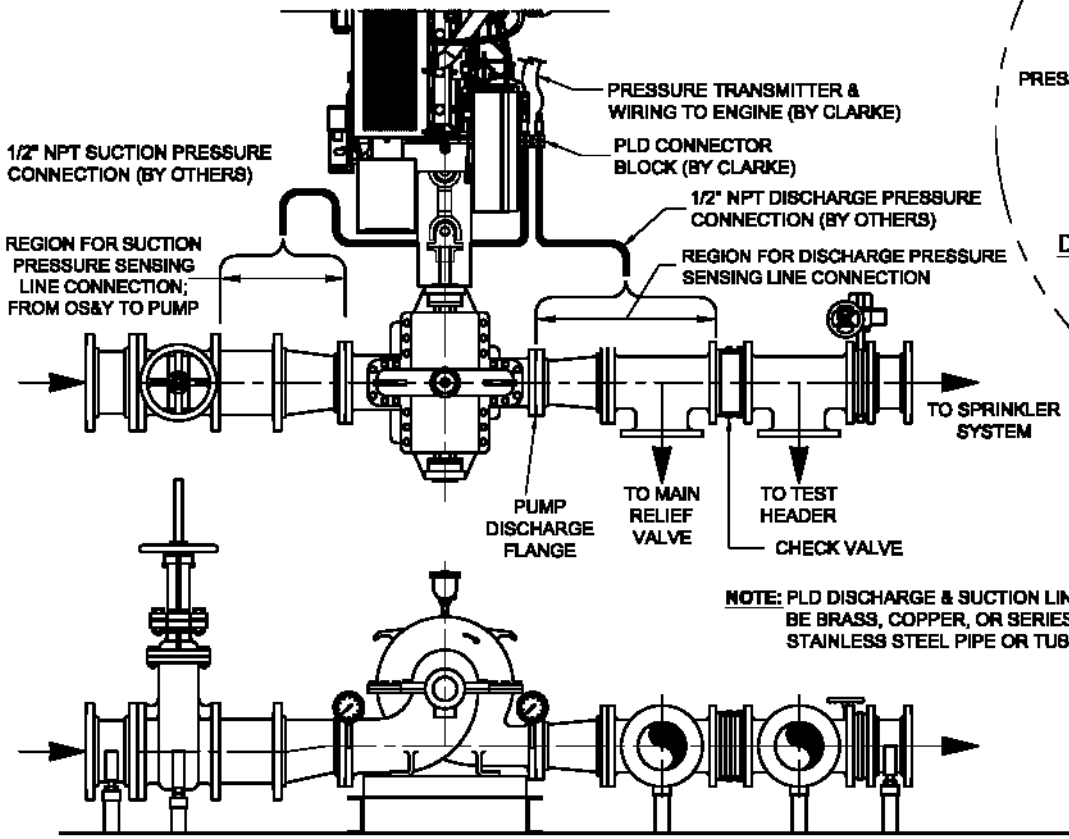

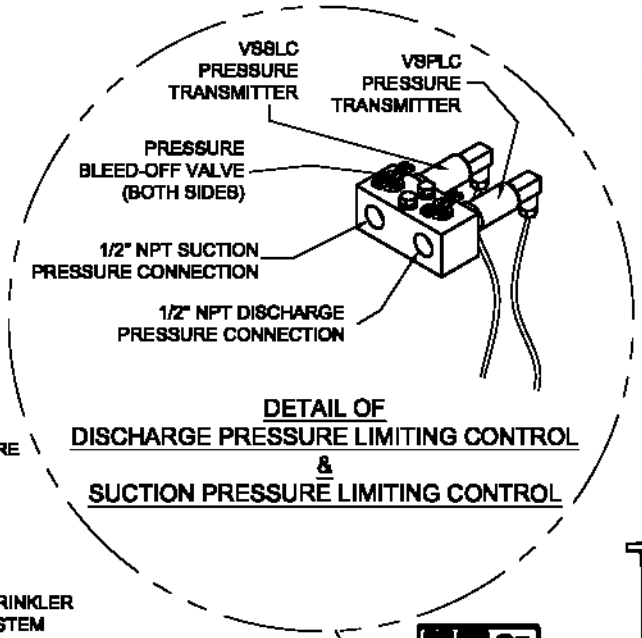

DETAIL OF
DISCHARGE PRESSURE LIMITING CONTROL
&
SUCTION PRESSURE LIMITING CONTROL

DETAIL "A"

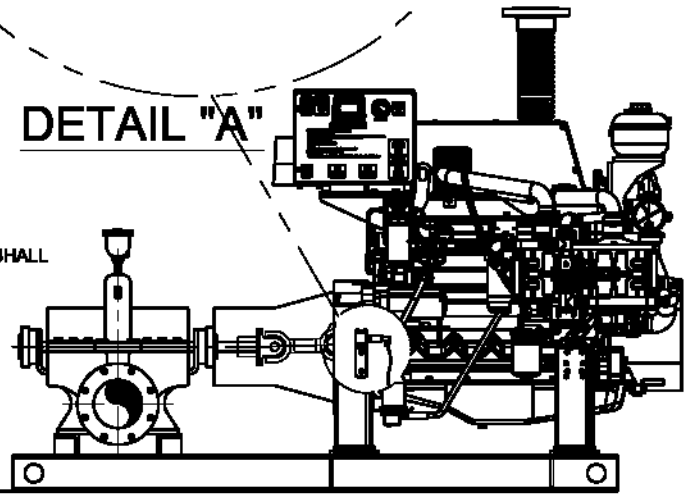

NOTE: PLD DISCHARGE & SUCTION LINES SHALL BE BRASS, COPPER, OR SERIES 300 STAINLESS STEEL PIPE OR TUBE.

CONTROLLED DRAWING

THIS IS A REGISTERED PART WITH A THIRD PARTY AGENCY FOR USE ON A PRODUCT. NO SUBSTITUTIONS ARE ALLOWED. CONSULT ENGINEERING PRIOR TO AND REGARDING ANY CHANGE.

REV	DESCRIPTION	ECN#	DWN	APVD	DATE
A	ISSUED ENGINEERING DRAWING	1555	MJD	KJK	13MAY09
B	UPDATED JX6H CONNECTION DIMENSIONS	3827	DGP		06OCT14
C	JX MODELS PG 2 REFERENCED INSTALLATION D626	—	MAL		30JAN15
D	UPDATED JX6H CONNECTION DIMENSIONS	—	DGP		26JUL15
E	ADDED PG3 DETAILING VSSLC ALARM LOCATION	—	DMP		28APR16
F	REMOVED PG3 DETAILING VSSLC ALARM LOCATION	—	DMP		09NOV19
-	ADDED CNTRLD DWG NOTE, CNTRLD DWG BOX WAS MARKED NO	6309	MAL		13JUL21

THIS DRAWING AND THE INFORMATION CONTAINED HEREIN IS PROPRIETARY AND MAY BE USED BY OTHERS ONLY AS AUTHORIZED BY CFA. UNPUBLISHED - ALL RIGHTS RESERVED UNDER THE COPYRIGHT LAWS.

UNLESS OTHERWISE SPECIFIED TOLERANCES ARE: DIM IN FRACTIONS ±1/32 ANGLES ±1°

CONTROLLED DRAWING

CLARKE
Fire Protection Products, Inc.

DRAWN: MJDEMENKOWSKI
DATE: 13MAY09
SHEET: KJKUNKLER
MATERIAL:

TITLE: ELECTRONIC PLD SCHEMATIC

PART NO.: C133028 REV: F

SCALE: NTS LIMITS: N/A PAGE 1 OF 2

CLARKE JU4H & JU6H ENGINE MODELS
REFERENCE D630 & D628 FOR STANDARD ENGINE INSTALLATION DRAWING

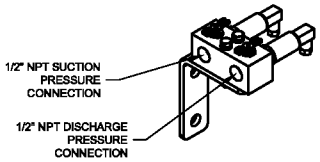

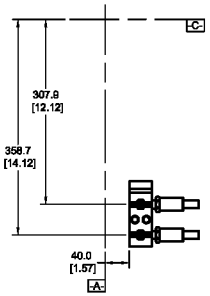

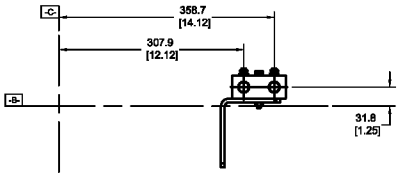

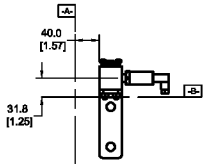

CLARKE JX6H ENGINE MODELS
REFERENCE D710 FOR STANDARD ENGINE INSTALLATION DRAWING

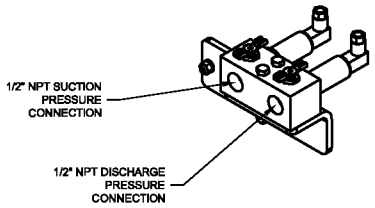

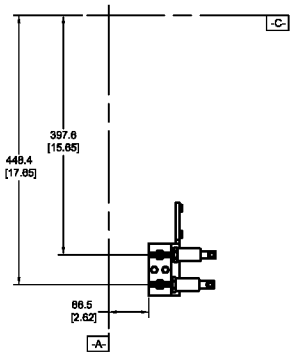

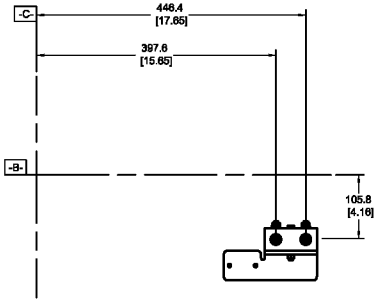

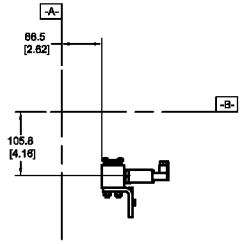

CLARKE JW6H ENGINE MODELS
REFERENCE D716 FOR STANDARD ENGINE INSTALLATION DRAWING

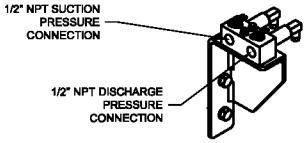

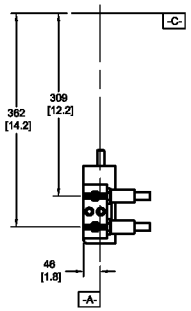

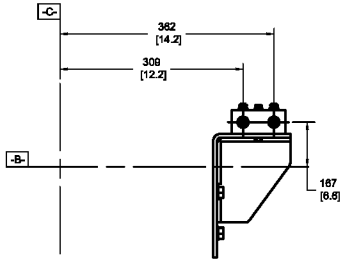

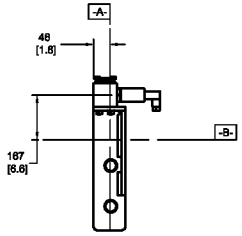

DATUMS:

-A- - MOUNTING FACE OF FLYWHEEL

-B- - ENGINE CRANKSHAFT HORIZONTAL CENTERLINE

-C- - ENGINE CRANKSHAFT VERTICAL CENTERLINE

THIS DRAWING AND THE INFORMATION HEREON ARE OUR PROPERTY AND MAY BE USED BY OTHERS ONLY AS AUTHORIZED BY US. UNPUBLISHED—ALL RIGHTS RESERVED UNDER THE COPYRIGHT LAWS.

UNLESS OTHERWISE SPECIFIED TOLERANCES ARE:

	MM	IN
DECIMAL .X	±1.0	±0.04
.XX	±0.5	±0.02
.XXX	±0.25	±0.01
FRACTIONAL	±1/32	
ANGULAR	±.5°	

SIMILAR TO

CONTROLLED DRAWING ☒ YES ☐ NO

CLARKE *Fire Protection Products, Inc.*

DRWN	MJDEMBKOWSKI
DATE	13MAY09
ENGR	KJKUNKLER
MATERIAL	
NAME	ELECTRONIC PLD SCHEMATIC
PART NO.	C133028
REV	F
USED ON / LAYOUT PART NO.	
SCALE	NTS
UNITS	N/A
PAGE	2 OF 2

JW6H-UFADD0

FIRE PUMP DRIVER

NOISE DATA

Mechanical Engine Noise *

RPM	BHP	OVERALL dB(A)	Octave Band 31.5 Hz dB(A)	63 Hz dB(A)	125 Hz dB(A)	250 Hz dB(A)	500 Hz dB(A)	1k Hz dB(A)	2k Hz dB(A)	4k Hz dB(A)	8k Hz dB(A)	16k Hz dB(A)
1760	324	109.20	67.00	69.20	82.60	89.20	97.10	99.70	104.90	103.40	101.70	101.70
2100	351	109.10	65.40	68.00	78.50	89.90	96.60	99.90	104.50	101.10	97.70	97.30

Raw Exhaust Engine Noise **

RPM	BHP	OVERALL dB(A)	Octave Band 31.5 Hz dB(A)	63 Hz dB(A)	125 Hz dB(A)	250 Hz dB(A)	500 Hz dB(A)	1k Hz dB(A)	2k Hz dB(A)	4k Hz dB(A)	8k Hz dB(A)	16k Hz dB(A)
1760 - 2100	324 - 351	114.20	0.00	103.90	108.30	103.00	105.20	104.80	107.50	104.70	94.40	88.00

** Values above are provided at 3.3ft (1m) from engine block and do not include the raw exhaust noise.*

*** Values above are provided at 23ft (7m), 90° horizontal, from a vertical exhaust outlet and does not include noise created mechanically by the engine.*

The above data reflects nominal values for a typical engine of this model, speed and power in a free-field environment, tested at a no-load condition.

Installation specifics such as background noise level and amplification of noise levels from reflecting off of surrounding objects, will affect the overall noise levels observed. As a result of this, Clarke makes no guarantees to the above levels in an actual installation.

APPENDIX G

HVAC SPECIFICATIONS

Product Catalog

Packaged Rooftop Air Conditioners Voyager™ Light Commercial — Cooling, Gas/Electric

12.5 to 25 Tons, 60 Hz

December 2021 **RT-PRC028AH-EN**

Introduction

Packaged Rooftop Air Conditioners

Through the years, Trane has designed and developed the most complete line of Packaged Rooftop products available in the market today. Trane was the first to introduce the Micro—microelectronic unit controls—and has continued to improve and revolutionize this design concept.

The ReliaTel™control platform offers the same great features and functionality as the original Micro, with additional benefits for greater application flexibility.

Voyager™ continues to provide the highest standards in quality and reliability, comfort, ease of service, and the performance of Trane light commercial products.

Trane customers demand products that provide exceptional reliability, meet stringent performance requirements, and are competitively priced. Trane delivers with Voyager.

Voyager features cutting edge technologies: reliable compressors, Trane engineered ReliaTel™ controls, computer-aided run testing, and Integrated Comfort™ Systems. So, whether you're the contractor, the engineer, or the owner, you can be certain Voyager products are built to meet your needs.

Copyright

This document and the information in it are the property of Trane, and may not be used or reproduced in whole or in part without written permission. Trane reserves the right to revise this publication at any time, and to make changes to its content without obligation to notify any person of such revision or change.

Trademarks

Trane and the Trane logo, CompleteCoat, Frostat, Integrated Comfort Systems, ReliaTel, Tracer, Voyager, are trademarks of Trane in the United States and other countries. All trademarks referenced in this document are the trademarks of their respective owners.

Revision History

Updated General data—25 tons high efficiency table in General Data chapter.

Table of Contents

Features and Benefits 4
- Standard Features and Available Options 4
- Standard Features 6
- Variety of Options 10
- Other Benefits 17

Application Considerations 20

Selection Procedure 22
- Cooling Capacity 22
- Heating Capacity 23
- Air Delivery Selection 23

Model Number Description 24

. 24
- Model Number Notes 25

General Data 26

Performance Data 38

Controls 120
- Economizer Controls 120
- Zone Sensors 120
- Communication Interfaces 123

Electrical Data 124

Jobsite Connections 135

Dimensional Data 136

Weights 145

Mechanical Specifications 148
- Factory Installed Options 150
- Factory or Field Installed Options 153
- Field Installed Options 154

Model Number Description

Digit 1 — Unit Type

T = Packaged Cooling, Electric Heat
Y = Packaged Cooling, Gas Heat

Digit 2 — Efficiency

S = Standard Efficiency
H = High Efficiency

Digit 3 — Airflow Configuration

D = Downflow
H = Horizontal

Digit 4, 5, 6 — Nominal Gross Cooling Capacity (MBh)

150 = 12½ Tons
180 = 15 Tons
210 = 17½ Tons, 60Hz DOE 2018
240 = 20 Tons
300 = 25 Tons, 60Hz DOE 2018

Digit 7 — Major Design Sequence

G = ASHRAE 90.1-2013 (Fan/ Compressor Staging)[13] or Microchannel Type Evaporator and Condenser Coils

Digit 8 — Voltage Selection

3 = 208-230/60/3
4 = 460/60/3
W = 575/60/3
K = 380/60/3

Digit 9 — Unit Controls

R = Reliatel

Digit 10 — Heating Capacity

Note: *(Applicable to Digit 1 T models only)*

0 = No Heat
G = 18 kW Electric Heat
K = 27 kW Electric Heat
N = 36 kW Electric Heat
P = 54 kW Electric Heat
R = 72 kW Electric Heat

Note: *(Applicable to Digit 1 Y models only)*

H = Gas Heat - High
L = Gas Heat - Low
V = Gas Heat - SS Ht Ex - Modulating
X = Gas Heat - SS Ht Ex - Low
Z = Gas Heat - SS Ht Ex - High

Digit 11 — Minor Design Sequence

Digit 12, 13 — Service Sequence

00 = None
01 = 18mm Microchannel Condenser Coil

Note: *'01' only available on select models.*

Digit 14 — Fresh Air Selection

0 = No Fresh Air
D = Econ Dry Bulb w/ Barometric Relief[1]
F = Econ Reference Enthaply w/ Barometric Relief[1]
H = Econ Comparative Enthaply w/ Barometric Relief[1]
K = Low Leak Econ w/ Barometric Relief[1]
M = Low Leak Econ Reference Enthalpy w/ Barometric Relief[1]
P = Low Leak Econ Comparative Enthalpy w/ Barometric Relief[1]

Digit 15 — Supply Fan/Drive Type/Motor

0 = Standard Motor
1 = Oversized Motor[6]
3 = High Efficiency Motor[6]
6 = Single Zone Variable Air Volume Standard Motor
7 = Multi-Speed Standard Motor
8 = Single Zone Variable Air Volume Oversized Motor
9 = Multi-Speed Oversized Motor
A = Single Zone Variable Air Volume Standard Motor w/ Shaft Grounding Ring
B = Multi-Speed Standard Motor w/ Shaft Grounding Ring
C = Single Zone Variable Air Volume Oversized Motor w/ Shaft Grounding Ring
D = Multi-Speed Oversized Motor w/ Shaft Grounding Ring
E = VAV Supply Air Temperature Control - Standard Motor
F = VAV Supply Air Temperature Control - Oversized Motor
G = VAV Supply Air Temperature Control - Standard Motor w/ Shaft Grounding Ring
H = VAV Supply Air Temperature Control - Oversized Motor w/ Shaft Grounding Ring

Digit 16 — Hinged Service Access / Filters

0 = Standard Panels/Standard Filters[22]
A = Hinged Access/Standard Filters[22]
B = Standard Panels/MERV 8 Filters[6]
C = Hinged Access/MERV 8 Filters[6]
D = Standard Panels/MERV 13 Filters[6]
E = Hinged Access/MERV 13 Filters[6]

Digit 17 — Condenser Coil Protection

0 = Standard Coil
1 = Standard Coil With Hail Guard
4 = CompleteCoat™Condenser Coil
5 = CompleteCoat™Condenser Coil with Hail Guard

Digit 18 — Through The Base Provisions

Note: *Applicable to Digit 1, T or Y models.*

0 = No Through The Base Provisions
A = Through The Base Electric[12]

Note: *Applicable to Digit1, Y models only.*

B = Through The Base Gas
C = Through The Base Electric/Gas[12]
D = Through The Base Access

Digit 19 — Disconnect Switch/ Circuit Breaker[11]

0 = No Disconnect/circuit break
1 = Unit Mounted Non-Fused Disconnect Switch
2 = Unit Mounted Circuit Breaker

Digit 20 — Convenience Outlet Option

0 = Without Convenience Outlet
A = Unpowered Convenience Outlet[5]
B = Powered Convenience Outlet[5]

Digit 21 — Communications Options

0 = Without Communications Options
1 = Trane Communications Interface[6, 15]
2 = Lontalk Communications Interface[6]
6 = Building Automation Control Network Communications Interface
7 = Air-Fi® Wireless Communications[24]

Digit 22 — Refrigeration System Option

0 = Standard refrigeration system
B = Dehumidification (Hot Gas Reheat)[4,13]

Digit 23 — Refrigeration Controls

0 = Without Refrigeration Controls
1 = Frostat[9, 18]

Digit 24 — Smoke Detector[2,10]

0 = Without Smoke Detector
A = Return Air Smoke Detector
B = Supply Air Smoke Detector
C = Return/Supply Air Smoke Detector
D = Plenum Smoke Detector[19]

Digit 25 — System Monitoring Controls

0 = No Monitoring Controls
1 = Clogged Filter Switch[9]
2 = Fan Failure Switch[9]
3 = Discharge Air Sensing[9]
4 = Clogged Filter Switch and Fan Failure switch[9]

5 = Clogged Filter Switch and Discharge Air Sensing[9]
6 = Fan Failure Switch and Discharge Air Sensing[9]
7 = Clogged Filter Switch, Fan Failure Switch and Discharge Air Sensing[9]
A = Condensate Drain Pan Overflow Switch
B = Clogged Filter Switch and Condensate Drain Pan Overflow Switch[9]
C = Fan Failure Switch and Condensate Drain Pan Overflow Switch[9]
D = Discharge Air Sensing and Condensate Drain Pan Overflow Switch[9]
E = Clogged Filter Switch, Fan Failure Switch and Condensate Drain Pan Overflow Switch[9]
F = Clogged Filter Switch, Discharge Air Sensing Tube and Condensate Drain Pan Overflow Switch[9]
G = Fan Failure Switch, Discharge Air Sensing Tube and Condensate Drain Pan Overflow Switch[9]
H = Clogged Filter Switch, Fan Failure Switch, Discharge Air Sensing and Condensate Drain Pan Overflow Switch[9]

Digit 26 - System Monitoring Controls

0 = No Monitoring Controls
A = Demand Control Ventilation (CO_2)[17]
B = FDD (Fault Detection and Diagnostics)
C = FDD (Fault Detection Diagnostics) and Demand Control Ventilation (CO_2)[17]

Digit 27 - Unit Hardware Enhancements

0 = No Enhancements
1 = Stainless Steel Drain Pan

Digit 28 - Short Circuit Current Rating

0 = Standard SCCR
A = 65kA SCCR Option[20, 21]

Digit 31 - Advanced Unit Controls

0 = Standard Unit Controls
1 = Human Interface[23]

Note: *Most Factory Installed Options available for Downflow Air Discharge units only. Please verify with ordering system for availability.*

Model Number Notes

1. Some field set up required.
2. Requires ReliaTel Options Module.
3. Requires Economizer.
4. All 22nd digit model numbers for reheat coil (B) require additional factory installed options: Frostat, and 2-inch pleated filters.
5. Must be ordered with Through-the-Base Electrical option or Horizontal-Side Access and either Unit Mounted Disconnect or Circuit Breaker.
6. Available factory installed on downflow AND horizontal units. Verify with ordering system.
7. Cannot be fused.
8. Must be factory installed when using Through-the-Base Options.
9. ReliaTel Options Module is required when ordering the following accessories: 4 Stage Cooling, Clogged Filter Switch, Fan Fail Switch, Condensate Overflow Switch, Discharge Air Sensing Kit, Frostat, Ventilation Override, Smoke Detector, Dehumidification and Modulating Gas Heat Furnace.
10. Option cannot be ordered in conjunction with field installed economizer on downflow units. Must be factory installed. The return air smoke detector may not fit up or work properly on the Voyager units when used in conjunction with 3rd party accessories (such as bolt on heat wheels, economizers, and power exhaust). Do not order the return air smoke detectors when using this type of accessory.
11. Unit mounted disconnect and circuit breakers are mutually exclusive of each other.
12. Through-the-base electrical option or Horizontal-Side Access must be ordered with either unit mounted disconnect or circuit breaker. When adding heat, you must order Trane Electric Heat.
13. Available on high efficiency units only.
14. All Factory Installed Options are Built-to-Order. Check order services for estimated production cycle.
15. TCI is for use with non-VariTrac systems and VariTrac systems.
16. For use with multi-speed and SZVAV units only.
17. Demand Control Ventilation Option includes wiring only. The CO_2 sensor is a field-installed only option.
18. Frostat is standard on VAV and high efficiency units.
19. Supply and/or return smoke detector may not be used with the plenum smoke detector.
20. Only available where MOP is above 60A.
21. 575 Vac option is 25kA.
22. Standard filters are not available with Low Leak Economizers.
23. Human Interface is standard with FDD (Fault Detection Diagnostics).
24. Must be used with BACnet® open protocol.

General Data

Table 3. General data—cooling 12½–15 tons standard efficiency

	12½ Tons Downflow and Horizontal Units		15 Tons Downflow and Horizontal Units	
	TS*150G3,4,W,K	**YS*150G3,4,W,K**	**TS*180G3,4,W,K**	**YS*180G3,4,W,K**
Cooling Performance[a]				
Gross Cooling Capacity	150,000	150,000	186,000	186,000
EER (Downflow/Horizontal)[b]	11	11	11	11
Nominal Airflow CFM / AHRI Rated CFM	5,000 / 4,000	5,000 / 4,000	6,000 / 5,400	6,000 / 5,400
AHRI Net Cooling Capacity	140,000	140,000	176,000	176,000
Integrated Energy Efficiency Ratio (IEER) (One Speed Fan / Multi or Variable Speed Fan)[c]	12.4/13.5	12.2/13.5	12.4/13.2	12.2/13.2
Percent Capacity @ part load (Stage 1/Stage 2)	66/100	66/100	67/100	67/100
System Power (kW)	12.73	12.73	16.00	16.00
Compressor				
Number/Type	2 / Scrolls	2 / Scrolls	2 / Scrolls	2 / Scrolls
Sound				
Outdoor Sound Rating (BELS)[d]	9.2	9.2	9.2	9.2
Outdoor Coil				
Type	Microchannel	Microchannel	Microchannel	Microchannel
Coil Width (in.)	0.71	0.71	0.71	0.71
Face Area (sq. ft.)	25.9	25.9	35.2	35.2
Rows/FPI (DF/HZ)	1/23	1/23	1/23	1/23
Indoor Coil				
Type	Microchannel	Microchannel	Microchannel	Microchannel
Coil Width (in.)	1.00	1.00	0.81	0.81
Face Area (sq. ft.)	17.30	17.30	23.00	23.00
Rows/FPI	2/16	2/16	2/16	2/16
Refrigerant Control	TXV	TXV	TXV	TXV
Drain Connection Number/Size (in.)	1/1.00 NPT	1/1.00 NPT	1/1.00 NPT	1/1.00 NPT
Outdoor Fan				
Type	Propeller	Propeller	Propeller	Propeller
Number Used/Diameter (in.)	2 / 26	2 / 26	2 / 26	2 / 26
Drive Type/No. Speeds	Direct / 1	Direct / 1	Direct / 1	Direct / 1
cfm	11,000	11,000	11,000	11,000
Number Motors/hp	2 / 0.50	2 / 0.50	2 / 0.50	2 / 0.50
Motor rpm	1,100	1,100	1,100	1,100
Indoor Fan				
Type	FC Centrifugal	FC Centrifugal	FC Centrifugal	FC Centrifugal
Number Used/Diameter (in.)	1 / 15x15	1 / 15x15	1 / 18x18	1 / 18x18
Drive Type/No. Speeds	Belt / 1	Belt / 1	Belt / 1	Belt / 1
Number Motors	1	1	1	1
Motor hp (Standard/Oversized)[e]	3.0 / 5.0	3.0 / 5.0	3.0 / 5.0 or 7.5[f]	3.0 / 5.0 or 7.5[f]
Motor rpm (Standard/Oversized)	1,740 / 3,450	1,740 / 3,450	1,740 / 3,450	1,740 / 3,450
Motor Frame Size (Standard/Oversized)	56HZ / 56HZ	56HZ / 56HZ	184TZ / 56HZ/184TZ	56HZ / 56HZ/184TZ

Table 3. General data—cooling 12½–15 tons standard efficiency (continued)

	12½ Tons Downflow and Horizontal Units		15 Tons Downflow and Horizontal Units	
	TS*150G3,4,W,K	YS*150G3,4,W,K	TS*180G3,4,W,K	YS*180G3,4,W,K
Filters				
Type Furnished[g]	Throwaway	Throwaway	Throwaway	Throwaway
Number Size Recommended				
Downflow	(2)20x20x2 (4)20x25x2	(2)20x20x2 (4)20x25x2	(4)20x20x2 (4)20x25x2	(4)20x20x2 (4)20x25x2
Horizontal	(2)20x20x2 (4)20x25x2	(2)20x20x2 (4)20x25x2	(8)20x25x2	(8)20x25x2
Refrigerant Charge (Pounds of R-410A)[h]				
Cir#1 / Cir#2 (DF)	8.1/5.1	8.1/5.1	9.0/5.0	9.0/5.0
Cir#1 / Cir#2 (HZ)	8.1/5.2	8.1/5.2	9.2/5.1	9.2/5.1

(a) Cooling Performance is rated at 95°F ambient, 80°F entering dry bulb, 67°F entering wet bulb. Gross capacity does not include the effect of fan motor heat. AHRI capacity is net and includes the effect of fan motor heat. Units are suitable for operation to ±20% of nominal cfm. Certified in accordance with the Unitary Large Equipment Certification Program, which is based on AHRI Standard 340/360.
(b) EER is rated at AHRI conditions and in accordance with AHRI Standard 210/240 or 340/360.
(c) Integrated Energy Efficiency Ratio (IEER) is rated in accordance with AHRI standard 210/240 or 340/360.
(d) Outdoor Sound Rating shown is tested in accordance with AHRI Standard 270 or 370.
(e) For 380V/60Hz units, the oversized motor (Indoor Fan) is used as the standard motor. Refer to oversized motor data.
(f) Offered only as a field installed accessory.
(g) An optional 2-inch pleated filter is also available.
(h) Refrigerant charge is an approximate value. For a more precise value, see unit nameplate and service instructions.
* Indicates both downflow and horizontal units.

Table 4. General data—heating—12½–15 tons standard efficiency

	12½ Tons Downflow and Horizontal Units			15 Tons Downflow and Horizontal Units		
	Heating Performance[a] (Gas/Electric Only)					
Heating Models	**Low**	**High**	**Modulating Turn Down = 2.5:1**	**Low**	**High**	**Modulating Turn Down = 2.5:1**
Heating Input (Btu/h)	150,000	250,000	350,000	250,000	350,000	350,000
1st Stage (Btu)	100,000	175,000	140,000	175,000	250,000	140,000
Heating Output (Btu/h)	120,000	200,000	280,000	200,000	280,000	280,000
1st Stage (Btu)	80,000	140,000	112,000	140,000	200,000	112,000
Steady State Efficiency%	80	80	80	80	80	80
No. Burners	1	1	1	1	1	1
No. Stages	2	2	N/A	2	2	N/A
Gas Supply Line Pressure (in. wc)	2.5/14.0	2.5/14.0	2.5/14.0	2.5/14.0	2.5/14.0	2.5/14.0
Natural or LP (minimum/maximum)	Natural or LP	Natural or LP	Natural Only	Natural or LP	Natural or LP	Natural Only
Gas Connection Pipe Size (in.)	1/2	1/2	3/4	1/2	3/4	3/4

(a) Heating Performance limit settings and rating data were established and approved under laboratory test conditions using American National Standards Institute standards. Ratings shown are for elevations up to 2000 feet. For elevations above 2000 feet, ratings should be reduced at the rate of 4% for each 1000 feet above sea level.

Table 5. General data—17½–20 tons standard efficiency

	17½ Tons Downflow and Horizontal Units		20 Tons Downflow and Horizontal Units	
	TS*210G3,4,W,K	YS*210G3,4,W,K	TS*240G3,4,W,K	YS*240G3,4,W,K
Cooling Performance[a]				
Gross Cooling Capacity	210,000	210,000	259,000	259,000
EER (Downflow/Horizontal)[b]	11	11	10	10
Nominal Airflow CFM / AHRI Rated CFM	7,000 / 6,125	7,000 / 6,125	8,000 / 6,400	8,000 / 6,400
AHRI Net Cooling Capacity	196,000	196,000	240,000	240,000
Integrated Energy Efficiency Ratio (IEER) (One Speed Fan / Multi or Variable Speed Fan)[c]	12.4/13.2	12.2/13.2	11.6/12.4	11.4/12.4
Percent Capacity @ part load (Stage 1/Stage 2)	67/100	67/100	67/100	67/100
System Power (kW)	17.82	17.82	24.00	24.00
Compressor				
Number/Type	2 / Scrolls	2 / Scrolls	2 / Scrolls	2 / Scrolls
Sound				
Outdoor Sound Rating (BELS)[d]	9.4	9.4	9.4	9.4
Outdoor Coil				
Type	Microchannel	Microchannel	Microchannel	Microchannel
Coil Width (in.)	1.00	1.00	1.0	1.0
Face Area (sq. ft.)	35.2	35.2	35.2	35.2
Rows/FPI (DF/HZ)	1/20	1/20	1/23 / 1/20	1/23 / 1/20
Indoor Coil				
Type	Microchannel	Microchannel	Microchannel	Microchannel
Tube Size (in.) ID	1.00	1.00	1.00	1.00
Face Area (sq. ft.)	23.00	23.00	23.00	23.00
Rows/FPI	2 / 16	2 / 16	2 / 16	2 / 16
Refrigerant Control	TXV	TXV	TXV	TXV
Drain Connection Number/Size (in.)	1/1.00 NPT	1/1.00 NPT	1/1.00 NPT	1/1.00 NPT
Outdoor Fan				
Type	Propeller	Propeller	Propeller	Propeller
Number Used/Diameter (in.)	2 / 26	2 / 26	2 / 26	2 / 26
Drive Type/No. Speeds	Direct / 1	Direct / 1	Direct / 1	Direct / 1
cfm	14,500	14,500	15,500	15,500
Number Motors/hp	2 / 1.0	2 / 1.0	2 / 1.0	2 / 1.0
Motor rpm	1125	1125	1125	1125
Indoor Fan				
Type	FC Centrifugal	FC Centrifugal	FC Centrifugal	FC Centrifugal
Number Used/Diameter (in.)	1 / 18x18	1 / 18x18	1 / 18x18	1 / 18x18
Drive Type/No. Speeds	Belt / 1	Belt / 1	Belt / 1	Belt / 1
Number Motors	1	1	1	1
Motor hp (Standard/Oversized)[e]	5.0 / 7.5	5.0 / 7.5	5.0 / 7.5	5.0 / 7.5
Motor rpm (Standard/Oversized)	3,450 / 3,470	3,450 / 3,470	3,450 / 3,470	3,450 / 3,470
Motor Frame Size (Standard/Oversized)	56HZ / 184T	56HZ / 184T	56HZ / 184T	56HZ / 184T

Table 5. General data—17½–20 tons standard efficiency (continued)

	17½ Tons Downflow and Horizontal Units		20 Tons Downflow and Horizontal Units	
	TS*210G3,4,W,K	YS*210G3,4,W,K	TS*240G3,4,W,K	YS*240G3,4,W,K
Filters				
Type Furnished[f]	Throwaway	Throwaway	Throwaway	Throwaway
Number Size Recommended				
Downflow	(4)20x20x2 (4)20x25x2	(4)20x20x2 (4)20x25x2	(4)20x20x2 (4)20x25x2	(4)20x20x2 (4)20x25x2
Horizontal	(8)20x25x2	(8)20x25x2	(8)20x25x2	(8)20x25x2
Refrigerant Charge (Pounds of R-410A)				
Cir#1/Cir#2 (DF)	12.6/6.8	12.6/6.8	12.4/7.2	12.4/7.2
Cir#1/Cir#2 (HZ)	12.0/6.8	12.0/6.8	11.7/6.8	11.7/6.8

(a) Cooling Performance is rated at 95°F ambient, 80°F entering dry bulb, 67°F entering wet bulb. Gross capacity does not include the effect of fan motor heat. AHRI capacity is net and includes the effect of fan motor heat. Units are suitable for operation to ±20% of nominal cfm. Certified in accordance with the Unitary Large Equipment Certification Program, which is based on AHRI Standard 340/360.
(b) EER is rated at AHRI conditions and in accordance with AHRI Standard 210/240 or 340/360.
(c) Integrated Energy Efficiency Ratio (IEER) is rated in accordance with AHRI standard 210/240 or 340/360.
(d) Outdoor Sound Rating shown is tested in accordance with AHRI Standard 270 or 370.
(e) For 380V/60Hz units, the oversized motor (Indoor Fan) is used as the standard motor. Refer to oversized motor data.
(f) Refrigerant charge is an approximate value. For a more precise value, see unit nameplate and service instructions.
* Indicates both downflow and horizontal units.

Table 6. General data—heating—17½–20 tons standard efficiency

	17½ Tons Downflow and Horizontal Units			20 Tons Downflow and Horizontal Units		
	Heating Performance[a] (Gas/Electric Only)					
Heating Models	**Low**	**High**	**Modulating Turn Down = 2.5:1**	**Low**	**High**	**Modulating Turn Down = 2.5:1**
Heating Input (Btu/h)	250,000	350,000	350,000	250,000	400,000	350,000
1st Stage (Btu)	175,000	250,000	140,000	175,000	300,000	140,000
Heating Output (Btu/h)	200,000	280,000	280,000	200,000	320,000	280,000
1st Stage (Btu)	140,000	200,000	112,000	140,000	240,000	112,000
Steady State Efficiency%	80	80	80	80	80	80
No. Burners	1	1	1	1	1	1
No. Stages	2	2	N/A	2	2	N/A
Gas Supply Line Pressure (in. wc)	2.5/14.0	2.5/14.0	2.5/14.0	2.5/14.0	2.5/14.0	2.5/14.0
Natural or LP (minimum/maximum)	Natural or LP	Natural or LP	Natural Only	Natural or LP	Natural or LP	Natural Only
Gas Connection Pipe Size (in.)	1/2	3/4	3/4	1/2	3/4	3/4

(a) Heating Performance limit settings and rating data were established and approved under laboratory test conditions using American National Standards Institute standards. Ratings shown are for elevations up to 2000 feet. For elevations above 2000 feet, ratings should be reduced at the rate of 4% for each 1000 feet above sea level.

Table 7. General data—25 tons standard efficiency

	25 Tons Downflow and Horizontal Units	
	TS*300G3,4,W,K	**YS*300G3,4,W,K**
Cooling Performance[a]		
Gross Cooling Capacity	285,300	285,300
EER (Downflow/Horizontal)[b]	10	10
Nominal Airflow CFM / AHRI Rated CFM	10,000 / 8,000	10,000 / 8,000
AHRI Net Cooling Capacity	266,000	266,000
Integrated Energy Efficiency Ratio (IEER) (One Speed Fan / Multi or Variable Speed Fan)[c]	11.6/12.4	11.4/12.4
Percent Capacity @ part load (Stage 1/Stage 2)	66/100	66/100
System Power (kW)	27	27
Compressor		
Number/Type	2 / Scrolls	2 / Scrolls
Sound		
Outdoor Sound Rating (BELS)[d]	9.4	9.4
Outdoor Coil		
Type	Microchannel	Microchannel
Coil Width (in.)	1.0	1.0
Face Area (sq. ft.)	35.2	35.2
Rows/FPI (DF/HZ)	1/23 / 1/20	1/23 / 1/20
Indoor Coil		
Type	Microchannel	Microchannel
Tube Size (in.) ID	1.00	1.00
Face Area (sq. ft.)	23.00	23.00
Rows/FPI	2 / 16	2 / 16
Refrigerant Control	TXV	TXV
Drain Connection Number/Size (in.)	1/1.00 NPT	1/1.00 NPT
Outdoor Fan		
Type	Propeller	Propeller
Number Used/Diameter (in.)	2 / 28	2 / 28
Drive Type/No. Speeds	Direct / 1	Direct / 1
cfm	16,100	16,100
Number Motors/hp	2 / 1.0	2 / 1.0
Motor rpm	1125	1125
Indoor Fan		
Type	FC Centrifugal	FC Centrifugal
Number Used/Diameter (in.)	1 / 18x18	1 / 18x18
Drive Type/No. Speeds	Belt / 1	Belt / 1
Number Motors	1	1
Motor hp (Standard/Oversized)	7.5 / N/A	7.5 / N/A
Motor rpm (Standard/Oversized)	3,470 / N/A	3,470 / N/A
Motor Frame Size (Standard/Oversized)	184T / N/A	184T / N/A

Table 7. General data—25 tons standard efficiency (continued)

	25 Tons Downflow and Horizontal Units	
	TS*300G3,4,W,K	YS*300G3,4,W,K
Filters		
Type Furnished[e]	Throwaway	Throwaway
Number Size Recommended		
Downflow	(4)20x20x2 (4)20x25x2	(4)20x20x2 (4)20x25x2
Horizontal	(8)20x25x2	(8)20x25x2
Refrigerant Charge (Pounds of R-410A)[f]		
Cir#1/Cir#2 (DF)	12.5/6.7	12.5/6.7
Cir#1/Cir#2 (HZ)	11.7/6.7	11.7/6.7

(a) Cooling Performance is rated at 95°F ambient, 80°F entering dry bulb, 67°F entering wet bulb. Gross capacity does not include the effect of fan motor heat. AHRI capacity is net and includes the effect of fan motor heat. Units are suitable for operation to ±20% of nominal cfm. Certified in accordance with the Unitary Large Equipment Certification Program, which is based on AHRI Standard 340/360.
(b) EER is rated at AHRI conditions and in accordance with AHRI Standard 210/240 or 340/360.
(c) Integrated Energy Efficiency Ratio (IEER) is rated in accordance with AHRI standard 210/240 or 340/360.
(d) Outdoor Sound Rating shown is tested in accordance with AHRI Standard 270 or 370.
(e) An optional 2-inch pleated filter is also available.
(f) Refrigerant charge is an approximate value. For a more precise value, see unit nameplate and service instructions.
* Indicates both downflow and horizontal units.

Table 8. General data—heating—25 tons

	25 Tons Downflow and Horizontal Units		
	Heating Performance[a] (Gas/Electric Only)		
Heating Models	**Low**	**High**	**Modulating Turn Down = 2.5:1**
Heating Input (Btu/h)	250,000	400,000	350,000
1st Stage (Btu)	175,000	300,000	140,000
Heating Output (Btu/h)	200,000	320,000	280,000
1st Stage (Btu)	140,000	240,000	112,000
Steady State Efficiency%	80	80	80
No. Burners	1	1	1
No. Stages	2	2	N/A
Gas Supply Line Pressure (in. wc)	2.5 / 14.0	2.5 / 14.0	2.5 / 14.0
Natural or LP (minimum/maximum)	Natural or LP	Natural or LP	Natural Only
Gas Connection Pipe Size (in.)	½	¾	¾

(a) Heating Performance limit settings and rating data were established and approved under laboratory test conditions using American National Standards Institute standards. Ratings shown are for elevations up to 2000 feet. For elevations above 2000 feet, ratings should be reduced at the rate of 4% for each 1000 feet above sea level.

Table 9. General data—12½–15 tons high efficiency

	12½ Tons Downflow and Horizontal Units		15 Tons Downflow and Horizontal Units	
	TH*150G3,4,W	YH*150G3,4,W	TH*180G3,4,W	YH*180G3,4,W
Cooling Performance[a]				
Gross Cooling Capacity	152,400	152,400	180,500	180,500
EER[b]	12.1	12.1	12.1	12.1
Nominal CFM / AHRI Rated CFM	5,000 / 4,000	5,000 / 4,000	6,000 / 5,250	6,000 / 5,250
AHRI Net Cooling Capacity	144,000	144,000	174,000	174,000
Integrated Energy Efficiency Ratio (IEER) (One Speed Fan / Multi or Variable Speed Fan)[c]	13.5/15.0	13.5/15.0	14.0/15.0	14.0/15.0
Percent Capacity @ part load (Stage 1/Stage 2/Stage 3)[d]	30/70/100	30/70/100	32/68/100	32/68/100
System Power (kW)	11.90	11.90	14.38	14.38
Compressor				
Number/Type	2 / Scrolls	2 / Scrolls	2 / Scrolls	2 / Scrolls
Sound				
Outdoor Sound Rating (BELS)[e]	9.2	9.2	9.2	9.2
Outdoor Coil				
Type	Microchannel	Microchannel	Microchannel	Microchannel
Coil Width (in.)	1.0	1.0	1.0	1.0
Face Area (sq. ft.)	35.2	35.2	42.6	42.6
Rows/FPI	1 / 20	1 / 20	1 / 20	1 / 20
Indoor Coil				
Type	Hi-Performance	Hi-Performance	Hi-Performance	Hi-Performance
Tube Size (in.) ID	0.3125	0.3125	0.3125	0.3125
Face Area (sq. ft.)	26.00	26.00	31.42	31.42
Rows/FPI	4 / 15	4 / 15	4 / 15	4 / 15
Refrigerant Control	TXV	TXV	TXV	TXV
Drain Connection Number/Size (in.)	1/1.00 NPT	1/1.00 NPT	1/1.00 NPT	1/1.00 NPT
Outdoor Fan				
Type	Propeller	Propeller	Propeller	Propeller
Number Used/Diameter (in.)	2 / 26	2 / 26	2 / 26	2 / 26
Drive Type/No. Speeds	Direct / 1	Direct / 1	Direct / 1	Direct / 1
cfm	11,400	11,400	11,700	11,700
Number Motors/hp	2 / 0.50	2 / 0.50	2 / 0.50	2 / 0.50
Motor rpm	1,100	1,100	1,100	1,100
Indoor Fan				
Type	FC Centrifugal	FC Centrifugal	FC Centrifugal	FC Centrifugal
Number Used/Diameter (in.)	1 / 18x18	1 / 18x18	1 / 18x18	1 / 18x18
Drive Type/No. Speeds	Belt / 1	Belt / 1	Belt / 1	Belt / 1
Number Motors	1	1	1	1
Motor hp (Standard/Oversized)	3.0 / 5.0	3.0 / 5.0	3.0 / 5.0	3.0 / 5.0
Motor rpm (Standard/Oversized)	1,740 / 3,450	1,740 / 3,450	1,740 / 3,450	1,740 / 3,450
Motor Frame Size (Standard/Oversized)	145T / 145T	145T / 145T	145T / 145T	145T / 145T

Table 9. General data—12½–15 tons high efficiency (continued)

	12½ Tons Downflow and Horizontal Units		15 Tons Downflow and Horizontal Units	
	TH*150G3,4,W	YH*150G3,4,W	TH*180G3,4,W	YH*180G3,4,W
Filters				
Type Furnished[f]	Throwaway	Throwaway	Throwaway	Throwaway
Number Size Recommended				
Downflow	(4)20x20x2 (4)20x25x2	(4)20x20x2 (4)20x25x2	(8)20x20x2 (4)20x16x2	(8)20x20x2 (4)20x16x2
Horizontal	(8)20x25x2	(8)20x25x2	(12)20x20x2	(12)20x20x2
Refrigerant Charge (Pounds of R-410A) [g]				
Downflow and Horizontal (Cir#1/Cir#2)	12.5/7.1	12.5/7.1	13.0/8.5	13.0/8.5
Optional Hot Gas Reheat Coil (Cir#1/Cir#2)	9.2 / 6.9	9.2 / 6.9	10.9 / 8.9	10.9 / 8.9

(a) Cooling Performance is rated at 95°F ambient, 80°F entering dry bulb, 67°F entering wet bulb. Gross capacity does not include the effect of fan motor heat. AHRI capacity is net and includes the effect of fan motor heat. Units are suitable for operation to ±20% of nominal cfm. Certified in accordance with the Unitary Large Equipment Certification Program, which is based on AHRI Standard 340/360.
(b) EER is rated at AHRI conditions and in accordance with AHRI Standard 210/240 or 340/360.
(c) Integrated Energy Efficiency Ratio (IEER) is rated in accordance with AHRI standard 210/240 or 340/360.
(d) 3 stages not available with Reheat models.
(e) Outdoor Sound Rating shown is tested in accordance with AHRI Standard 270 or 370.
(f) An optional 2 inch pleated filter is also available.
(g) Refrigerant charge is an approximate value. For a more precise value, see unit nameplate and service instructions.
* Indicates both downflow and horizontal units.

Table 10. General data—heating—12½-15 tons high efficiency

	12½ Tons Downflow and Horizontal Units			15 Tons Downflow and Horizontal Units		
	Heating Performance[a] (Gas/Electric Only)					
Heating Models	**Low**	**High**	**Modulating Turn Down = 2.5:1**	**Low**	**High**	**Modulating Turn Down = 2.5:1**
Heating Input (Btu/h)	150,000	250,000	350,000	250,000	350,000	350,000
1st Stage (Btu)	100,000	175,000	140,000	175,000	250,000	140,000
Heating Output (Btu/h)	120,000	200,000	280,000	200,000	280,000	280,000
1st Stage (Btu)	80,000	140,000	112,000	140,000	200,000	112,000
Steady State Efficiency%	80	80	80	80	80	80
No. Burners	1	1	1	1	1	1
No. Stages	2	2	N/A	2	2	N/A
Gas Supply Line Pressure (in. wc)	2.5 / 14.0	2.5 / 14.0	2.5 / 14.0	2.5 / 14.0	2.5 / 14.0	2.5 / 14.0
Natural or LP (minimum/maximum)			Natural Only			Natural Only
Gas Connection Pipe Size (in.)	½	½	¾	½	¾	¾

(a) Heating Performance limit settings and rating data were established and approved under laboratory test conditions using American National Standards Institute standards. Ratings shown are for elevations up to 2000 feet. For elevations above 2000 feet, ratings should be reduced at the rate of 4% for each 1000 feet above sea level.

Table 11. General data—17½–20 tons high efficiency

	17½ Tons Downflow and Horizontal Units		20 Tons Downflow and Horizontal Units	
	TH*210G3,4,W	YH*210G3,4,W	TH*240G3,4,W	YH*240G3,4,W
Cooling Performance[a]				
Gross Cooling Capacity	214,800	214,800	248,500	248,500
EER[b]	11.8	11.8	11.0	11.0
Nominal CFM / AHRI Rated CFM	7,000 / 5,600	7,000 / 5,600	8,000 / 6,400	8,000 / 6,400
AHRI Net Cooling Capacity	204,000	204,000	234,000	234,000
Integrated Energy Efficiency Ratio (IEER) (One Speed Fan / Multi or Variable Speed Fan)[c]	13.0/14.0	13.0/14.0	12.4/14.0	12.4/14.0
Percent Capacity @ part load (Stage 1/Stage 2/Stage 3)[d]	31/69/100	31/69/100	30/70/100	30/70/100
System Power (kW)	17.29	17.29	21.27	21.27
Compressor				
Number/Type	2 / Scrolls	2 / Scrolls	2 / Scrolls	2 / Scrolls
Sound				
Outdoor Sound Rating (BELS)[e]	9.2	9.2	9.4	9.4
Outdoor Coil				
Type	Microchannel	Microchannel	Microchannel	Microchannel
Coil Width (in.)	1.0	1.0	1.0	1.0
Face Area (sq. ft.)	42.6	42.6	42.6	42.6
Rows/FPI	1 / 20	1 / 20	1 / 20	1 / 20
Indoor Coil				
Type	Hi-Performance	Hi-Performance	Hi-Performance	Hi-Performance
Tube Size (in.) ID	0.3125	0.3125	0.3125	0.3125
Face Area (sq. ft.)	31.42	31.42	31.42	31.42
Rows/FPI	4 / 15	4 / 15	4 / 15	4 / 15
Refrigerant Control	TXV	TXV	TXV	TXV
Drain Connection Number/Size (in.)	1/1.00 NPT	1/1.00 NPT	1/1.00 NPT	1/1.00 NPT
Outdoor Fan				
Type	Propeller	Propeller	Propeller	Propeller
Number Used/Diameter (in.)	2 / 26	2 / 26	2 / 28	2 / 28
Drive Type/No. Speeds	Direct / 1	Direct / 1	Direct / 1	Direct / 1
cfm	15,800	15,800	16,500	16,500
Number Motors/hp	2 / 1.0	2 / 1.0	2 / 1.0	2 / 1.0
Motor rpm	1,125	1,125	1,125	1,125
Indoor Fan				
Type	FC Centrifugal	FC Centrifugal	FC Centrifugal	FC Centrifugal
Number Used/Diameter (in.)	1 / 18x18	1 / 18x18	1 / 18x18	1 / 18x18
Drive Type/No. Speeds	Belt / 1	Belt / 1	Belt / 1	Belt / 1
Number Motors	1	1	1	1
Motor hp (Standard/Oversized)	5.0 / 7.5	5.0 / 7.5	5.0 / 7.5	5.0 / 7.5
Motor rpm (Standard/Oversized)	3,450 / 3,470	3,450 / 3,470	3,450 / 3,470	3,450 / 3,470
Motor Frame Size (Standard/Oversized)	145T / 184T	145T / 184T	145T / 184T	145T / 184T

Table 11. General data—17½–20 tons high efficiency (continued)

	17½ Tons Downflow and Horizontal Units		20 Tons Downflow and Horizontal Units	
	TH*210G3,4,W	YH*210G3,4,W	TH*240G3,4,W	YH*240G3,4,W
Filters				
Type Furnished[f]	Throwaway	Throwaway	Throwaway	Throwaway
Number Size Recommended				
Downflow	(8)20x20x2 (4)20x16x2	(8)20x20x2 (4)20x16x2	(8)20x20x2 (4)20x16x2	(8)20x20x2 (4)20x16x2
Horizontal	(12)20x20x2	(12)20x20x2	(12)20x20x2	(12)20x20x2
Refrigerant Charge (Pounds of R-410A)[g]				
Downflow and Horizontal (Cir#1/Cir#2)	14.0 / 7.3	14.0 / 7.3	15.5 / 7.5	15.5 / 7.5
Optional Hot Gas Reheat Coil (Cir#1/Cir#2)	12.2/8.9	12.2/8.9	11.9 / 9.6	11.9 / 9.6

(a) Cooling Performance is rated at 95°F ambient, 80°F entering dry bulb, 67°F entering wet bulb. Gross capacity does not include the effect of fan motor heat. AHRI capacity is net and includes the effect of fan motor heat. Units are suitable for operation to ±20% of nominal cfm. Certified in accordance with the Unitary Large Equipment Certification Program, which is based on AHRI Standard 340/360.
(b) EER is rated at AHRI conditions and in accordance with AHRI Standard 210/240 or 340/360.
(c) Integrated Energy Efficiency Ratio (IEER) is rated in accordance with AHRI standard 210/240 or 340/360.
(d) 3 stages not available with Reheat models.
(e) Outdoor Sound Rating shown is tested in accordance with AHRI Standard 270 or 370.
(f) An optional 2 inch pleated filter is also available.
(g) Refrigerant charge is an approximate value. For a more precise value, see unit nameplate and service instructions.
* Indicates both downflow and horizontal units.

Table 12. General data—heating—17½–20 tons high efficiency

	17½ Tons Downflow and Horizontal Units			20 Tons Downflow and Horizontal Units		
	Heating Performance[a] (Gas/Electric Only)					
Heating Models	**Low**	**High**	**Modulating Turn Down = 2.5:1**	**Low**	**High**	**Modulating Turn Down = 2.5:1**
Heating Input (Btu/h)	250,000	350,000	350,000	250,000	400,000	350,000
1st Stage (Btu)	175,000	250,000	140,000	175,000	300,000	140,000
Heating Output (Btu/h)	200,000	280,000	280,000	200,000	320,000	280,000
1st Stage (Btu)	140,000	200,000	112,000	140,000	240,000	112,000
Steady State Efficiency%	80	80	80	80	80	80
No. Burners	1	1	1	1	1	1
No. Stages	2	2	N/A	2	2	N/A
Gas Supply Line Pressure (in. wc)	2.5 / 14.0	2.5 / 14.0	2.5/14.0	2.5 / 14.0	2.5 / 14.0	2.5/14.0
Natural or LP (minimum/maximum)			Natural Only			Natural Only
Gas Connection Pipe Size (in.)	½	¾	¾	½	¾	¾

(a) Heating Performance limit settings and rating data were established and approved under laboratory test conditions using American National Standards Institute standards. Ratings shown are for elevations up to 2000 feet. For elevations above 2000 feet, ratings should be reduced at the rate of 4% for each 1000 feet above sea level.

Table 13. General data—25 tons high efficiency

	25 Tons Downflow and Horizontal Units	
	TH*300G3,4,W	**YH*300G3,4,W**
Cooling Performance[a]		
Gross Cooling Capacity	292,300	292,300
EER[b]	10.6	10.6
Nominal CFM / AHRI Rated CFM	10,000 / 8,000	10,000 / 8,000
AHRI Net Cooling Capacity	274,000	274,000
Integrated Energy Efficiency Ratio (IEER) (One Speed Fan / Multi or Variable Speed Fan)[c]	12.4/15.0	12.4/15.0
Percent Capacity @ part load (Stage 1/Stage 2/Stage 3/Stage 4)[d]	25/50/75/100	25/50/75/100
System Power (kW)	25.85	25.85
Compressor		
Number[e]/Type	3 / Scrolls	3 / Scrolls
Sound		
Outdoor Sound Rating (BELS)[f]		
Outdoor Coil		
Type	Microchannel	Microchannel
Coil Width (in.)	1.0	1.0
Face Area (sq. ft.)	42.58	42.58
Rows/FPI	1 / 20	1 / 20
Indoor Coil		
Type	Hi-Performance	Hi-Performance
Tube Size (in.) ID	0.3125	0.3125
Face Area (sq. ft.)	31.42	31.42
Rows/FPI	4 / 15	4 / 15
Refrigerant Control	TXV	TXV
Drain Connection Number/Size (in.)	1/1.00 NPT	1/1.00 NPT
Outdoor Fan		
Type	Propeller	Propeller
Number Used/Diameter (in.)	2 / 28	2 / 28
Drive Type/No. Speeds	Direct / 1	Direct / 1
cfm	16,500	16,500
Number Motors/hp	2 / 1.0	2 / 1.0
Motor rpm	1,125	1,125
Indoor Fan		
Type	FC Centrifugal	FC Centrifugal
Number Used/Diameter (in.)	1 / 18x18	1 / 18x18
Drive Type/No. Speeds	Belt / 1	Belt / 1
Number Motors	1	1
Motor hp (Standard)	7.5	7.5
Motor rpm (Standard)	3,470	3,470
Motor Frame Size (Standard)	184T	184T