SOUTH TAHOE PUBLIC UTILITY DISTRICT SOLAR PROJECT

Draft
CEQA Initial Study/Mitigated Negative Declaration
and
TRPA Initial Environmental Checklist

August 2023

Prepared By
Hauge Brueck Associates, LLC
Carmichael, CA

Prepared For
South Tahoe Public Utility District
South Lake Tahoe, CA

◢ Contents

1.0 INTRODUCTION 1-1
1.1 INITIAL STUDY / INITIAL ENVIRONMENTAL CHECKLIST SCOPE 1-1
1.2 BACKGROUND 1-1
1.3 PROJECT LOCATION 1-1
1.4 PROJECT OBJECTIVES/PURPOSE AND NEED 1-3
1.5 PERMITS AND APPROVALS 1-3
1.6 DOCUMENT ORGANIZATION 1-4

2.0 DESCRIPTION OF PROPOSED PROJECT AND ALTERNATIVES 2-1
2.1 PROJECT LOCATION AND DESCRIPTION 2-1
2.2 REGULATORY COMPLIANCE MEASURES 2-4

3.0 ENVIRONMENTAL CHECKLIST AND IMPACT ANALYSIS 3-1
3.1 ENVIRONMENTAL FACTORS POTENTIALLY AFFECTED 3-2
3.2 CEQA ENVIROMENTAL DETERMINATION 3-3
3.3 TRPA ENVIRONMENTAL DETERMINATION (TO BE COMPLETED BY TRPA) 3-4
3.4 EVALUATION OF ENVIRONMENTAL IMPACTS 3-5
3.4.1 CEQA 3-5
3.4.2 TRPA 3-5
3.4.3 Aesthetics, Scenic Resources/Community Design and Light and Glare 3-7
3.4.4 Agriculture and Forestry Resources 3-16
3.4.5 Air Quality 3-19
3.4.6 Biological Resources (SEZ, Wetlands, Wildlife and Vegetation) 3-23
3.4.7 Cultural Resources (CEQA) and Archaeological/Historical (TRPA) 3-44
3.4.8 Energy (CEQA/TRPA) 3-47
3.4.9 Geology and Soils (CEQA) and Land (TRPA) 3-49
3.4.10 Greenhouse Gas Emissions (CEQA) and Air Quality (TRPA) 3-56
3.4.11 Hazards and Hazardous Materials and Risk of Upset and Human Health 3-58
3.4.12 Hydrology and Water Quality 3-63
3.4.13 Land Use and Planning 3-71
3.4.14 Mineral Resources (CEQA) and Natural Resources (TRPA) 3-74
3.4.15 Noise 3-76
3.4.16 Population and Housing 3-80
3.4.17 Public Services 3-83
3.4.18 Recreation 3-87
3.4.19 Transportation (CEQA) and Traffic and Circulation (TRPA) 3-90
3.4.20 Tribal Cultural Resources (CEQA) and Archaeological/Historical (TRPA) 3-93
3.4.21 Utilities and Service Systems (CEQA) and Utilities (TRPA) 3-96
3.4.22 Wildfire (CEQA) 3-101
3.4.23 Mandatory Findings of Significance 3-104
3.5 CERTIFICATION [TRPA ONLY] 3-109
3.6 REFERENCES 3-110

APPENDIX A – SOLAR PROJECT PLAN SHEETS A-1

1.0 INTRODUCTION

1.1 INITIAL STUDY / INITIAL ENVIRONMENTAL CHECKLIST SCOPE

This Initial Study/Initial Environmental Checklist (IS/IEC) has been prepared to address the potential environmental effects of the South Tahoe Public Utility District (STPUD or District) Solar Project and associated Timber Harvest Plan (Timber Conversion Permit) located next to the District's wastewater treatment plant in the City of South Lake Tahoe, California. An Initial Study (IS) is a preliminary environmental analysis that is used by the California Environmental Quality Act (CEQA) lead agency as a basis for determining whether an EIR, a Mitigated Negative Declaration, or a Negative Declaration is required for a project under CEQA guidelines. An Initial Environmental Checklist (IEC) is a preliminary environmental analysis that is used for determining whether an EIS, a Mitigated Finding of No Significant Effect, or a Finding of No Significant Effect is required for a project under Tahoe Regional Planning Agency (TRPA) Rules of Procedure.

The IS/IEC contains a project description, description of environmental setting, identification and explanation of environmental effects, discussion of mitigation for potentially significant environmental effects, and the names of persons who prepared the study. This IS/IEC evaluates the STPUD Solar Project and provides information needed to support the TRPA Public Service permit application. STPUD and its operations partner Staten Solar, wish to construct a 1,339 kW DC Ground Mount Photovoltaic System to the east of the District's wastewater treatment plant. The power generated by the system would be used to run the treatment plant facilities under a net metering agreement with Liberty Utilities (Liberty); Liberty is the local electrical utility.

The IS has been prepared pursuant to the California Environmental Quality Act (CEQA) of 1970, Cal. Pub. Res. Code §21000 et seq. The LTCC is the CEQA lead agency for this project. The IEC has been prepared pursuant to the requirements of Article VI of the TRPA Rules of Procedures and Chapter 3 of TRPA's Code of Ordinances. TRPA serves as lead agency pursuant to its own regulations.

1.2 BACKGROUND

The proposed Solar Project would supply power to the STPUD wastewater treatment plant (WWTP) located in South Lake Tahoe, CA. From 1951 to 1960 the District's facilities consisted of two septic tanks. A 2.5 MGD activated sludge plant was constructed in 1960. The original 2.5 MGD AWT (Advanced Water Treatment) plant was placed in service in 1965. The AWT plant was expanded to 7.5 MGD and the 27-mile long effluent export pipeline was placed in service in 1968. The "Head Start" program in 1980 included emergency wet weather pumping improvements. In 1985, "Contract 1" began the modification from AWT to advanced secondary operation. In 1989, the WWTP capacity was expanded to 7.7 MGD, the new Harvey Place dam and reservoir was completed, and advanced secondary operation began.

1.3 PROJECT LOCATION

The STPUD WWTP facilities are located at 1275 Meadow Crest Drive, South Lake Tahoe, CA 96150 (Figure 1). The approximately 114-acre STPUD site is within the south shore of the Lake Tahoe Basin of the Sierra Nevada Mountains, within the city limits of South Lake Tahoe, California. The Project area is bound by the Lake Tahoe Community College (LTCC) to the north, Al Tahoe Boulevard and USFS owned lands to the east, STPUD emergency retention basin (ERB) to the south, and residential development and Trout Creek to the west. Access to the Project area is via Al Tahoe Boulevard, and Black Bart Avenue from

the south. Chapter 2 contains a detailed description of the location, project components, and figures to illustrate the STPUD project area and Solar Project components.

Figure 1-1. Project Vicinity

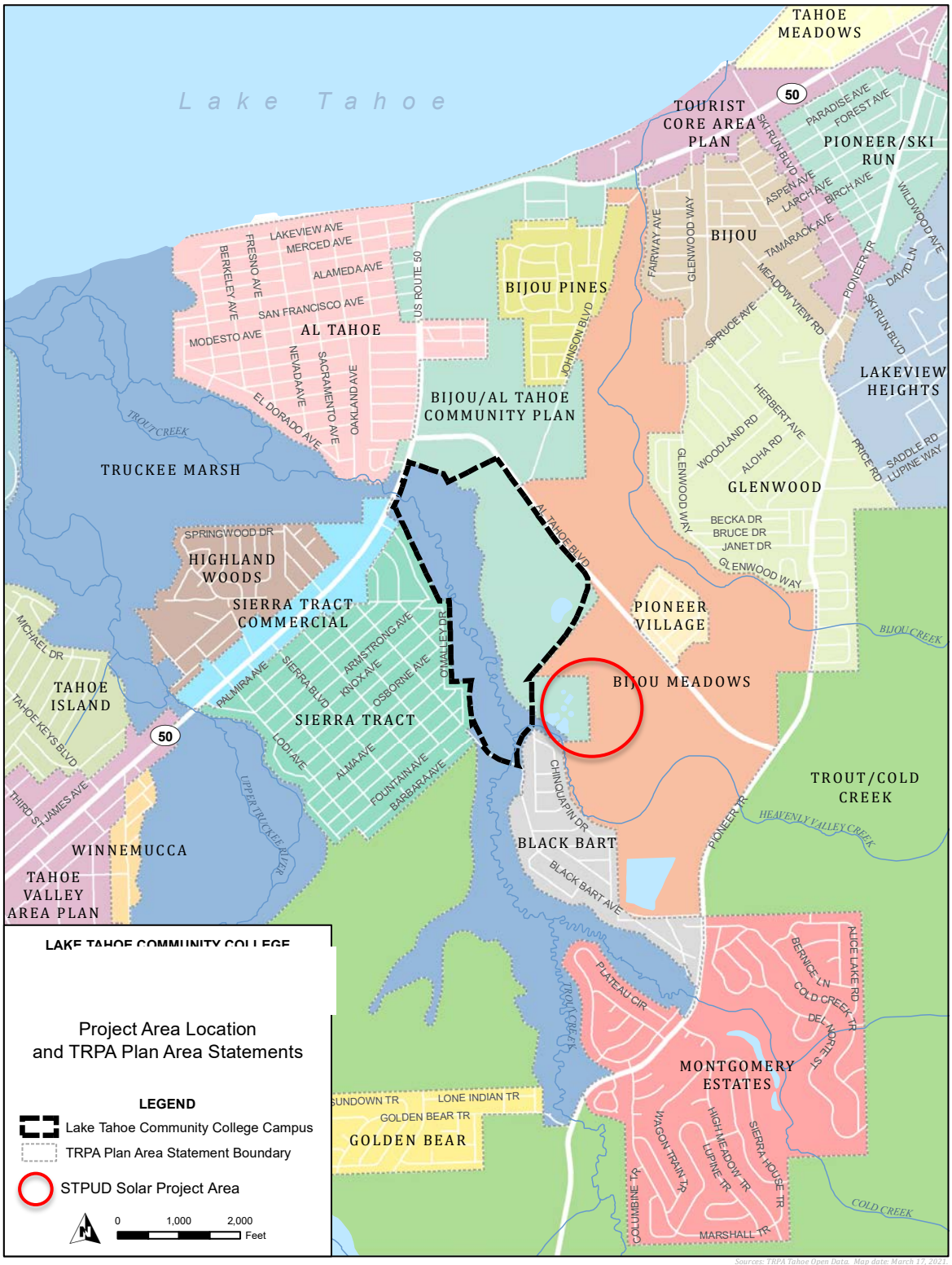

1.4 PROJECT OBJECTIVES/PURPOSE AND NEED

On October 20, 2022, the South Tahoe Public Utility District Board of Directors held a public hearing and unanimously voted to enter into a Power Purchase Agreement with Staten Solar for a solar project at the WWTP. The 1339 kW ground mounted solar facility will be built on the east side of the WWTP and will offset one-third of the energy demands at plant beginning in 2024. The solar project stemmed from working with the Solar Energy and Economic Development (SEED) Fund to develop a list of potential solar projects in the Lake Tahoe region during the summer of 2020. It is the first of these projects to go to construction and will be the largest solar array in the Tahoe Basin. A power purchase agreement means there is no upfront costs for the STPUD. The solar provider will fund, build, own, and maintain the solar array, and the STPUD will purchase the power produced at a lower price than Liberty currently charges, saving STPUD ratepayers over the anticipated 28 years of operation.

1.5 PERMITS AND APPROVALS

This environmental document and findings must be adopted by the STPUD (CEQA lead agency) and the Tahoe Regional Planning Agency as part of their permitting review. The Project must be consistent with the codes, regulations and policies that include, but are not limited to the following list.

Tahoe Regional Planning Agency

- Tahoe Regional Planning Compact (PL 96-551 94 Statute 3233); and
- Regional Plan for the Lake Tahoe Basin;
  - Goals and Policies;
  - Code of Ordinances (Code);
  - Rules of Procedure;
  - Environmental Thresholds Carrying Capacities;
  - Plan Area Statements, Community Plans, and Area Plans;
  - Bi-State 208 Water Quality Plan;
  - Regional Transportation Plan; and
  - Environmental Improvement Program.

Federal

- Endangered Species Act - United States Fish and Wildlife Service;
- Clean Water Act - Environmental Protection Agency; and
- National Historic Preservation Act.

State of California

- Water Quality Control Plan for the Lahontan Region (Basin Plan);
- California Endangered Species Act (CESA);
- CALFIRE Timber Harvest Plan Requirements;
- State Vehicle Emissions Controls; and
- State Historic Preservation Act.

El Dorado County

- Health Department Regulations; and

- Air Quality Management District Regulations.

City of South Lake Tahoe

- Design Review

Permits

- TRPA Public Service Permit;
- Liberty Energy Net Metering Agreement
- CALFIRE timber conversion permit; and
- California Regional Water Quality Control Board-Lahontan Region, NPDES permit.

1.6 DOCUMENT ORGANIZATION

This IS/IEC includes the standard content for environmental documents under CEQA and TRPA Code of Ordinances and Rules of Procedures. An EIR/EIS was determined to be unnecessary, as there are no potentially significant environmental effects associated with the implementation of proposed Solar Project that cannot be mitigated. This IS/IEC is a full disclosure document, describing the Solar Project and its environmental effects in sufficient detail to aid decision-making.

Chapter 1 includes a description of the IS/IEC process and scope, project background and objectives, the general location of the Project and surrounding land uses, and a list of permits and approvals.

Chapter 2 contains a detailed project location and characteristics description, and a description of the Solar Project components, including the proposed solar array, access roadway, utilities connections, and regulatory compliance measures to be implemented as the Project is constructed.

Chapter 3 contains environmental settings, a detailed analysis of the environmental effects and necessary mitigation measures if applicable.

2.0 DESCRIPTION OF PROPOSED PROJECT

2.1 PROJECT LOCATION AND DESCRIPTION

The approximately 114-acre STPUD Project area is within the south shore of the Lake Tahoe Basin of the Sierra Nevada Mountains, in the city limits of South Lake Tahoe, California. The overall District Project area includes eight (8) contiguous parcels of varying sizes (25-061-30, 25-061-31, 25-061-32, 25-061-33, 25-041-12, 25-051-27, 25-061-35, 25-071-22). Figure 1-1 provides a map of the Project location and existing land use designations in the TRPA Plan Area Statements (PAS). Table 2-1 summarizes the TRPA Plan Area Statements, plan designations, and planning statements in the Project area, as well as City of South Lake Tahoe Zoning. Table 2-2 details the Project area parcels, parcel area and TRPA and City of South Lake Tahoe Zoning.

Table 2-1

TRPA and South Lake Tahoe Plan Area Statements

TRPA PAS	Plan Designation	Planning Statements	South Lake Tahoe Zoning
098 – Bijou/Al Tahoe Community Plan	Land Use Classification: Commercial/ Public Service Management Strategy: Redirection Special Designation: Preliminary Community Plan Area TDR Receiving Area for 1. Existing Development 2. Residential Bonus Units Scenic Restoration Area Multi-Residential Incentive Program	The area should be developed to provide regional commercial, recreational and public services for the South Shore.	Commercial
100 – Truckee Marsh	Land Use Classification: Conservation Management Strategy: Maximum Regulation Special Designation: None	The area should be managed primarily for its natural values including those management practices which contribute to the quality of fish and wildlife habitats, support dispersed recreation, and maintain the nutrient catchment capacity of the SEZ.	Conservation
101 - Bijou Meadows	Land Use Classification: Recreation Management Strategy: Mitigation Special Designation: None	The SEZ of this Plan Area should be restored through redirection of existing uses and preserved as a natural functioning stream environment zone.	Recreation

Source: TRPA Plan Area Statements and Bijou/Al Tahoe Community Plan, and City of South Lake Tahoe Zoning Map

Note: Trenching for the electrical service intertie is proposed within existing pavement, road shoulder, and areas of existing underground utilities within PAS 100 (Heavenly Valley Creek area) but outside of undisturbed areas.

Table 2-2

Project Area Assessor Parcel Numbers and Existing Zoning

Parcel Owner	APN	City and TRPA Zoning	Plan Area Number	Area (acres)
STPUD	25-061-30	Commercial	PAS 098	0.92
STPUD	25-061-31	Commercial	PAS 098	0.29
STPUD	25-061-32	Commercial and Conservation	PAS 098 and 100	18.46
STPUD	25-061-33	Commercial and Conservation	PAS 098 and 100	0.46
STPUD	25-041-12	Recreation	PAS 101	9.5
STPUD	25-051-27	Recreation	PAS 101	12.14
STPUD	25-061-35	Recreation	PAS 101	32.54
STPUD	25-071-22	Recreation	PAS 101	39.71
Total	--	--	--	114.02

Notes: Parcels 025-061-32 (18.46 acres) and 025-061-33 (0.46 acres) are partly zoned Commercial/Public Service and Conservation as shown on maps for PAS 098 and 101. All proposed work within PAS 101 (Conservation) will be located within existing land coverage and includes trenching for the solar project electrical connection.

The proposed Solar facility and associated Timber Harvest Plan is located east of the existing WWTP facility and within previously undeveloped APNs 25-061-35 and 25-071-22, part of PAS 101 (Bijou Meadows). The plan set included in Appendix A provides detailed site plans, details to document facility construction methods, and land coverage calculations. The solar power facility consists of a secured fenced area containing the solar arrays made up of individual solar panels aligned in rows, an access roadway to the solar arrays from the STPUD WWTP perimeter road, and underground wiring to connect the solar array switchgear to the existing WWTP electrical service connection point (Figure 2-1). No new lighting is proposed for the solar facilities.

The 19 rows of solar arrays are arranged in an east-west orientation and include eleven rows of arrays approximately 236 feet long, seven arrays approximately 270 feet long, and one array approximately 205 feet long. The arrays, designed to be four feet off the ground on the low side and approximately 10.5 feet above ground on the high side, will be enclosed within fencing with a total area of approximately 144,370 square feet (3.31 acres). To ensure that the panels will not be covered in shade from nearby trees, an additional area 100 feet from the fence line will be cleared of trees to the west, east and south of the solar field. As such, the total area for tree removal will equal approximately 297,370 square feet (6.83 acres). A timber harvest plan has been prepared to comply with California's (CalFire) Forest Practice Act. Following tree removal that also includes removal of the stumps where they conflict with solar array supports, the solar arrays will be constructed using ground screws and racks that connect the solar panels to the foundation (Figure 2-2). Besides required ground disturbance for the tree removal, no additional site grading will be required to install the solar panels – natural contours will be left in place. A paved access roadway will be constructed to connect the fenced solar field with the WWTP. A gate will be provided at both ends of the approximately 457 foot long and 20 foot wide access roadway. At the southwest end of the solar field, small concrete pads will be constructed to support a transformer, concentration panel and switchgear required to transmit power generated by the solar field to the District's existing electrical service connection. An approximately 1,770 foot long trench will be used to bury the wiring needed to connect the solar field to the WWTP. Approximately 700 linear feet of the trench is located outside of the existing WWTP and area cleared of trees for the solar field. Tree removal within 5 feet of the trench centerline is possible along this section of trenching depending on the final routing selected in the field.

Figure 2-1. Solar Project Site Plan

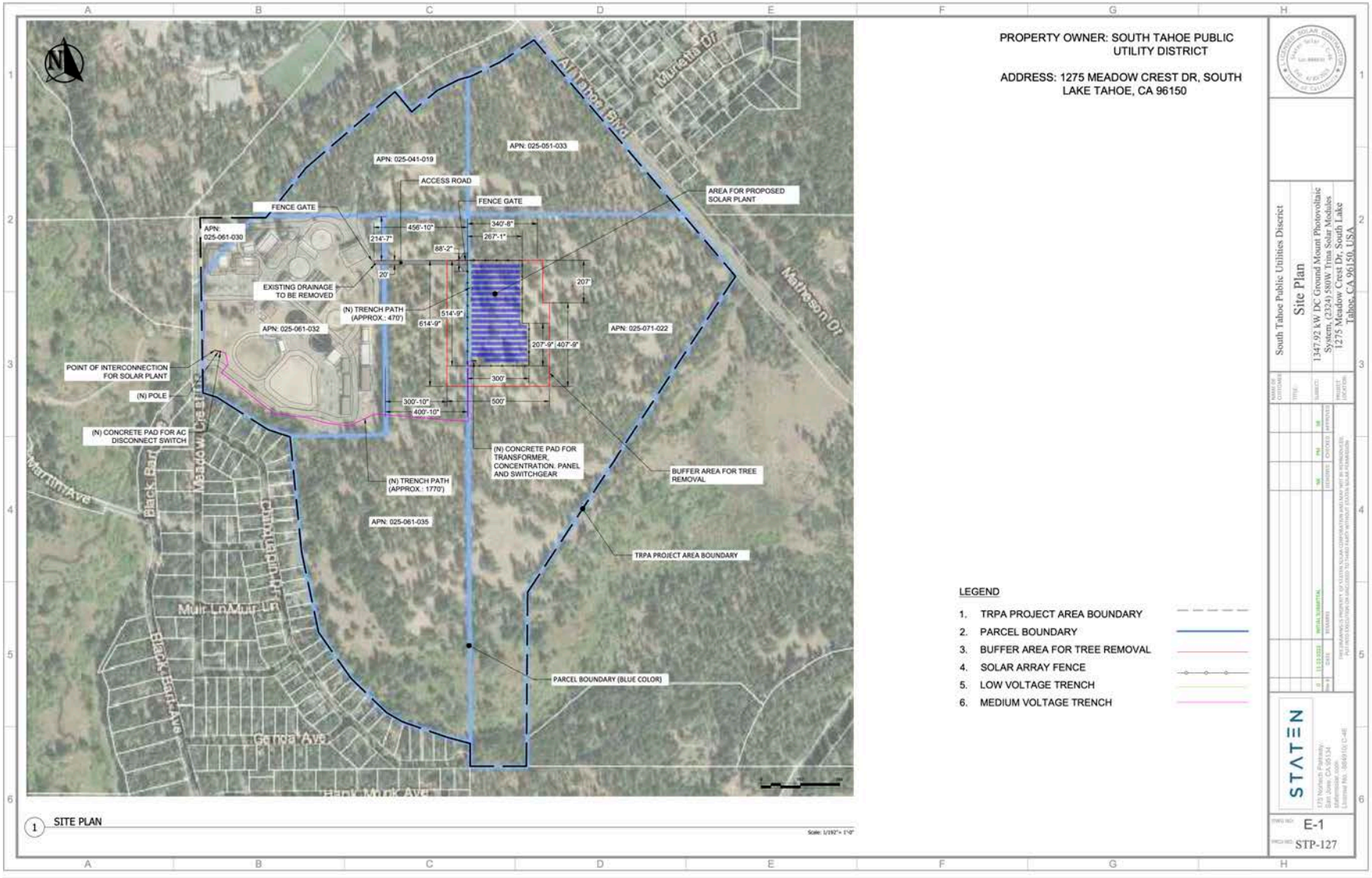

Figure 2-2. Photographic Examples of the Solar Arrays and Foundation

Example of ground screw used to support solar arrays

Example of solar array structure using ground screws

Example of solar array using ground screws and natural contours

2.2 REGULATORY COMPLIANCE MEASURES

Regulatory compliance measures are included in the description of the Project to minimize potentially significant environmental impacts. Regulatory compliance measures include measures such as installation of BMPs for Lahontan and the TRPA, agency permit requirements, and air quality protection measures and are considered part of the Project under TRPA and CEQA processes because compliance is required to permit, construct and operate the Project. The environmental documentation may identify additional mitigation measures when compliance with codified regulation is determined to be inadequate to eliminate potential environmental impacts. Where necessary, resource impact analyses identify the required compliance measures as linked to a potential impact with a clear description of why and how the compliance measure will reduce the impact to a less than significant level. Regulatory compliance measures of the Project are discussed in the sub-sections below.

2.2.1 TRPA Traffic and Air Quality Mitigation Program Fees

The Solar Project will not generate new vehicle trips on an ongoing basis. As such, the Applicant will not be required to pay air quality mitigation fees in accordance with Chapter 65.2—Traffic and Air Quality Mitigation Program of the TRPA Code of Ordinances.

2.2.2 Time of Day Construction Restrictions

This compliance measure restricts construction activities to between the hours of 8:00 AM and 6:30 PM to minimize noise impacts to sensitive receptors. Construction is exempt from TRPA's Code of Ordinances Noise Limitations (Chapter 68) if the activities occur between the hours 8:00 AM and 10:00 PM and is not injurious or disturbing to the health, safety, and general welfare of persons or property in the neighborhood (§22.7.5). TRPA Code of Ordinances §68.9 exempts construction noise between 8:00 AM and 6:30 PM. Construction activities before or after the time restriction may occur, but must be consistent with CNEL limits imposed for the applicable TRPA Plan Area and City noise ordinance. The Project area is located in TRPA Plan Areas 098, 100, and 101. The noise thresholds for these Plan Areas are 60 dB CNEL, 50 dB CNEL and 55 dB CNEL, respectively.

2.2.3 Construction Equipment Muffling

This compliance measure requires shrouding or shielding of impact tools and muffling or shielding intake and exhaust ports on construction equipment.

2.2.4 Emergency Vehicle Access During Construction

Because of the proposed tree removal and the need to haul downed trees from the site, the Project Applicant shall coordinate with the City of South Lake Tahoe Police Department, City of South Lake Tahoe Fire and Rescue (CSLTFR), Lake Valley Fire Protection District (LVFPD), utility companies, businesses, and residents within the construction corridor prior to and during construction activities to ensure affected parties are informed of the construction schedule and to develop actions to maintain access and service in the Project area.

Law Enforcement and Fire Protection

An accurate schedule outlining the location of construction, types of activities, and the location of anticipated traffic delays or hazards will be provided to the Police Department, CSLTFR, and LVFPD on a weekly basis. A point of contact within the construction team will be established for

emergency actions within or near construction. Traffic control measures to be used near construction will be reviewed and approved by the Police Department, CSLTFR, and LVFPD.

Residents and Businesses

Neighborhood residents will be notified so that they can prepare for delays or plan routes to avoid heavy traffic. Construction signage will be placed along the roadways during each phase of construction notifying the public of potential delays and hazards.

2.2.5 Utility Relocation and Construction Avoidance

Coordination will occur with utility providers prior to construction regarding the exact location of each underground utility line known to occur on the site. Utility service providers include the South Tahoe Public Utilities District (STPUD), Liberty Energy, Southwest Gas Corporation, and AT&T. Underground and overhead lines will be shown on project construction specifications within the civil engineering plans.

Construction contractors will contact Underground Service Alert (USA 811/1-800-227-2600) to ensure buried lines are properly marked and located. Utility companies will be provided with an accurate schedule noting when construction occurs near their facilities. Utility facilities will be identified on construction specifications. If grading or excavation is needed in these areas, the Project engineer will work with the utility companies to identify depth to conduit, pipeline, or other facility.

2.2.6 Impact Fees and Design Approval

The City of South Lake Tahoe requires design review per City Code Section 6.10.090. Major design review is required for all new non-residential development and total tear down and rebuilds and multi-family residential development with five or more units. In addition, the CSLTFR may review and approve fire protection systems for the Project, and whether the Project impacts emergency vehicle access routes in the Project area. TRPA also collects application and mitigation fees, as needed, based on the type and extent of the project.

The TRPA, CSLTFR, and CAL FIRE shall review Project designs, building materials, landscaping, and vegetation clearance for compliance with TRPA Code of Ordinances, and current building codes.

2.2.7 TRPA Erosion and Sediment Control Plan

The Solar contractor will prepare a site-specific Erosion and Sediment Control Plan to further define and map temporary BMPs for the control of erosion and runoff from ground disturbing activities. BMPs will be installed in accordance with TRPA Code of Ordinances §22.7.3, §33.5, and §60.4 and are considered part of the Project. An Erosion and Sediment Control Plan is required by TRPA and the City for project permitting. TRPA's BMP requirements are outlined in the Handbook of Best Management Practices (TRPA 1988) and for the City of South Lake Tahoe, BMPs must be in accordance with Chapter 7.20 of the City Code.

2.2.8 Stormwater Pollution Prevention Plan

Ground disturbance within the Project area will exceed one acre and is subject to the construction stormwater quality permit requirements of the NPDES program. The Solar contractor must obtain this permit from Lahontan and provide evidence of a state-issued WDID number or filing of a Notice of Intent (NOI) and fees prior to start of construction.

A SWPPP is required under Board Order No. R6T-2005-007 (General Permit No. CAG616002) for discharges of stormwater runoff associated with construction activity involving land disturbance in the Lake Tahoe hydrologic unit. The SWPPP will be designed to address the following objectives:

1. All pollutants and their sources, including sources of sediment associated with construction, construction site erosion and all other activities associated with construction activity are controlled;
2. Where not otherwise required to be under a Lahontan permit, all non-storm water discharges are identified and either eliminated, controlled, or treated;
3. Site BMPs are effective and result in the reduction or elimination of pollutants in storm water discharges and authorized non-storm water discharges from construction activity to the Best Available Technology Economically Achievable (BAT)/Best Conventional Pollutant Control Technology (BCT) standard;
4. Calculations and design details as well as BMP controls for site run-on are complete and correct, and
5. Stabilization BMPs installed to reduce or eliminate pollutants after construction are completed.
6. To demonstrate compliance with requirements of the NPDES permit, the Qualified SWPPP Developer will include information in the SWPPP that supports the conclusions, selections, use, and maintenance of BMPs.
7. The discharger will make the SWPPP available at the construction site during working hours while construction is occurring and shall be made available upon request by a State or Municipal inspector. When the original SWPPP is retained by a crewmember in a construction vehicle and is not currently at the construction site, current copies of the BMPs and map/drawing will be left with the field crew and the original SWPPP shall be made available via a request by radio/telephone.

2.2.9 Minimize Offsite Glare

The Project Design plans shall comply with TRPA Design Guidelines and Code Chapter 36 and Bijou/Al Tahoe Community Plan standards, and City of South Lake Tahoe Lighting Standards to minimize night lighting and glare onto adjacent parcels.

2.2.10 Tree Removal and Replacement

Tree removal shall follow the Timber Harvest Plan to be approved by CalFire as well as Chapters 33.6 and 61.1.4.C of the TRPA Code of Ordinances.

3.0 ENVIRONMENTAL CHECKLIST AND IMPACT ANALYSIS

1. Project title: STPUD Solar Project

2. Lead agency name and address:

   The South Tahoe Public Utility District is the California Environmental Quality Act (CEQA) lead agency responsible for preparing an Initial Study/Negative Declaration (IS/ND) and the Tahoe Regional Planning Agency (TRPA) will serve as the lead agency for the Initial Environmental Checklist (IEC) under the Tahoe Regional Planning Compact.

   STPUD
   1275 Meadow Crest Drive
   South Lake Tahoe, California 96150

   Tahoe Regional Planning Agency
   P.O. Box 5310
   Stateline, Nevada 89449

3. Contact person(s) and phone number(s):

   STPUD: Trevor Coolidge, (530) 543-6278, tcoolidge@stpud.us

4. Project location:

   The STPUD WWTP and adjacent parcels are located within the City of South Lake Tahoe, west of Al Tahoe Boulevard between US 50 and Pioneer Trail as shown on Figure 1-1.

5. Project sponsor's name and address:

   Staten Solar, Sam Bhanot
   175 Nortech Parkway
   San Jose, CA 95134

6. General Plan designation: Special District 4.

7. Zoning: Commercial/Public Service

8. Description of project: Refer to Chapter 2 of this document.

9. Surrounding land uses and setting: Refer to Chapters 1 and 2 of this document.

10. Other public agencies whose approval is required (e.g., permits, financing approval, or participation agreement):

    The project requires the STPUD Board of Directors and TRPA Governing Board approval. City of South Lake Tahoe and TRPA land development and construction permits and approvals would be

needed. Lahontan Regional Water Quality Control Board (Lahontan) National Pollutant Discharge Elimination System (NPDES) and Clean Water Act §401 water quality certification permits.

11. Have California Native American tribes traditionally and culturally affiliated with the project area requested consultation pursuant to Public Resources Code section 21080.3.1? If so, is there a plan for consultation that includes, for example, the determination of significance of impacts to tribal cultural resources, procedures regarding confidentiality, etc.

    California Native American tribes were first contacted by letter dated April 20, 2023 for this Solar Project review process. Follow up emails were sent to the tribes a month later in May 2023. No responses have been received to date. The Washoe Tribe of Nevada and California is traditionally and culturally affiliated with the project area.

3.1 ENVIRONMENTAL FACTORS POTENTIALLY AFFECTED

If environmental factors are checked below, there would be at least one impact that is a "Potentially Significant Impact" as indicated by the checklist on the following pages. As discussed in the IS/IEC checklist, there are no potentially significant impacts associated with the amendment. Applicable mitigation measures for general and cumulative impacts associated with the RPU are incorporated into the project approval.

☐ Aesthetics	☐ Agriculture/Forest Resources	☐ Air Quality
☒ Biological Resources	☐ Cultural Resources	☐ Energy
☐ Geology Resources	☐ Greenhouse Gas Emissions	☐ Hazards/Hazardous Materials
☐ Hydrology/Water Quality	☐ Land Use/Planning	☐ Mineral Resources
☐ Noise	☐ Population/Housing	☐ Public Services
☐ Recreation	☐ Transportation/Traffic	☐ Tribal Cultural Resources
☐ Utilities/Service Systems	☐ Wildfire	☐ Mandatory Findings of Significance
	☐ None	☒ None with Mitigation Incorporated

3.2 CEQA ENVIROMENTAL DETERMINATION

On the basis of this Initial Study:

☐ I find that the proposed project COULD NOT have a significant effect on the environment, and a NEGATIVE DECLARATION will be prepared.

☒ I find that although the proposed project could have a significant effect on the environment, there will not be a significant effect in this case because revisions in the project have been made by or agreed to by the project proponent. A MITIGATED NEGATIVE DECLARATION will be prepared.

☐ I find that the proposed project MAY have a significant effect on the environment, and an ENVIRONMENTAL IMPACT REPORT is required.

☐ I find that the proposed project MAY have a "potentially significant impact" or "potentially significant unless mitigated" impact on the environment, but at least one effect 1) has been adequately analyzed in an earlier document pursuant to applicable legal standards, and 2) has been addressed by mitigation measures based on the earlier analysis as described on attached sheets. An ENVIRONMENTAL IMPACT REPORT is required, but it must analyze only the effects that remain to be addressed.

Name, Title
South Tahoe Public Utility District

Date

3.3 TRPA ENVIRONMENTAL DETERMINATION (TO BE COMPLETED BY TRPA)

On the basis of this TRPA Initial Environmental Checklist:

a.	The proposed project could not have a significant effect on the environment and a finding of no significant effect shall be prepared in accordance with TRPA's Rules of Procedures	☐	Yes	☒	No
b.	The proposed project could have a significant effect on the environment, but due to the listed mitigation measures which have been added to the project, could have no significant effect on the environment and a mitigated finding of no significant effect shall be prepared in accordance with TRPA's Rules of Procedures.	☒	Yes	☐	No
c.	The proposed project may have a significant effect on the environment and an environmental impact statement shall be prepared in accordance with this chapter and TRPA's Rules of Procedures.	☐	Yes	☒	No

Signature of Evaluator

Date

Title of Evaluator

3.4 EVALUATION OF ENVIRONMENTAL IMPACTS

The following environmental analysis has been prepared using the CEQA Guidelines Appendix G: Environmental Checklist Form to complete an Initial Study (IS). This checklist also includes analysis of environmental impacts required in the TRPA Initial Environmental Checklist (IEC) found at: http://www.trpa.org/wp-content/uploads/Initial_Environmental_Checklist.pdf.

3.4.1 CEQA

CEQA requires a brief explanation for answers to the Appendix G: Environmental Checklist except "No Impact" responses that are adequately supported by noted information sources (see Table 3-1). Answers must take account of the whole action involved, including off-site as well as on-site, cumulative as well as project-level, indirect as well as direct, and construction as well as operational impacts.

Table 3-1: CEQA Defined Levels of Impact Significance

Impact Severity	Definition
No Impact	A "No Impact" answer is adequately supported if the referenced information sources show that the impact simply does not apply to projects like the one involved (e.g., the project falls outside a fault rupture zone). A "No Impact" answer should be explained where it is based on project-specific factors as well as general standards (e.g., the project will not expose sensitive receptors to pollutants, based on a project-specific screening analysis).
Less than Significant Impact	"Less than Significant Impact" applies where the Project's impact creates no significant impacts based on the criterion or criteria that sets the level of impact to a resource and require no mitigation to avoid or reduce impacts.
Less than Significant Impact after Mitigation	"Less than Significant Impact after Mitigation" applies where the incorporation of mitigation measures has reduced an effect from potentially "Significant Impact" to a "Less Than Significant Impact." The lead agency must describe the mitigation measures, and briefly explain how they reduce the effect to a less than significant level.
Significant Impact	"Significant Impact" is appropriate if there is substantial evidence that an effect is potentially significant, as based on the criterion or criteria that sets the level of impact to a resource. If there are one or more "Potentially Significant Impact" entries when the determination is made, an EIR is required.
Source: CEQA Appendix G Environmental Checklist Form 2018	

3.4.2 TRPA

Article VI of the TRPA Rules of Procedures presents the rules governing the preparation and processing of environmental documents pursuant to Article VII of the Compact and Chapter 3 of the Revised TRPA Code of Ordinances.

TRPA uses an IEC, in conjunction with other available information, to determine whether an EIS will be prepared for a project or other matter. This could include preparation of an Environmental Assessment, in accordance with Section 3.4 of the TRPA revised Code, when TRPA determines that an IEC will not provide sufficient information to make the necessary findings for a project.

The IEC includes a series of questions categorized by and pertaining to resources regulated by TRPA. Each checklist item requires a checked response of "Yes," "No," "No, with Mitigation," or "Data Insufficient." A checked response of "Data Insufficient" or a determination that a project may have a significant effect on the environment (Section 3.3.2 of the TRPA Code) indicates that additional environmental review in the

form of an Environmental Assessment (EA) or Environmental Impact Statement (EIS) would be required. The IEC form indicates that all "Yes" and "No, with Mitigation" responses require written explanations. This IEC provides supporting narrative for all responses. Where a checked response may not be intuitive or easily understood by the reader, that response has been marked with an asterisk (*) and a brief clarifying statement supporting the rationale for the checked response is included. Based on an initial review of the Project, TRPA and STPUD staff determined that an IEC would provide sufficient information regarding the Project to make one of the findings below. As set forth in Code Subsection 3.3.1, based on the information submitted in the IEC, and other information known to TRPA, TRPA shall make one of the following findings and take the identified action:

1. The proposed project could not have a significant effect on the environment and a finding of no significant effect shall be prepared in accordance with TRPA's Rules of Procedure.

2. The proposed project could have a significant effect on the environment, but due to the listed mitigation measures which have been added to the project, could have no significant effect on the environment and a mitigated finding of no significant effect shall be prepared in accordance with TRPA's Rules of Procedure.

3. The proposed project may have a significant effect on the environment and an environmental impact statement shall be prepared in accordance with this Chapter and TRPA's Rules of Procedure.

When completed, TRPA reviews the IEC to determine the adequacy and objectivity of the responses. When appropriate, TRPA consults informally with federal, state, or local agencies with jurisdiction over the project or with special expertise on applicable environmental impacts.

3.4.3 Aesthetics (CEQA), Scenic Resources/Community Design and Light and Glare (TRPA)

This section presents the analyses for potential impacts to aesthetics, scenic resources/community design and light and glare. Table 3-2 identifies the applicable impacts, anticipated level of impact, and whether mitigation measures are required to reduce impacts to a less than significant level.

Environmental Setting

The STPUD WWTP and adjacent parcels are characterized with a mix of natural forested landscapes, the WWTP and support facilities such as administrative offices and parking, and other nearby urban development. The surrounding area includes Bijou Community Park, Lake Tahoe Community College facilities, government offices, and residential and commercial uses intermixed with the natural landscape.

STPUD WWTP facilities are not visible from US 50 or Pioneer Trail. WWTP facilities are visible from Meadow Crest Drive near the plant entrance and from the South Tahoe Greenway trail that crosses Trout Creek to the west of the plant and travels north of the WWTP property. The Greenway trail is not on TRPA's official scenic recreation list because it was not yet constructed when the list was created. The southern portion of the WWTP property is characterized as undeveloped natural meadow along Heavenly Valley Creek. This area around Heavenly Valley Creek contains no structures or development other than residential homes along Chinquapin Drive (further to the south). The eastern portion of the WWTP property is characterized by undeveloped forested upland. Views of the WWTP property from the Lake Tahoe Community College recreational facilities (play fields and gym) currently include WWTP facilities and plant access roadway from Al Tahoe Blvd.

The developed WWTP property area is not located within a scenic roadway, shoreline, or recreation area, but does include a scenic bikeway located along Al Tahoe Boulevard. No existing WWTP facilities are visible from Al Tahoe Boulevard or the adjacent bike trail. The area immediately along Al Tahoe Boulevard to the east of the WWTP includes a hillside, and the WWTP facilities are substantially setback within the property, so the roadside view consists only of natural forested vegetation.

The proposed solar facility site is relatively flat with scattered trees and little ground vegetation. There are no rock outcroppings or historic buildings in the project area.

The City of South Lake Tahoe General Plan (2011) establishes goals and policies for scenic resources in the Natural and Cultural Resources Element, and for design in the Land Use and Community Character Element. The City's 2016 Design Guidelines were established to "provide a visual tool to help guide project applicants on how to meet the required design standards in a manner that meets the desired aesthetic of the community," and are to be used as aid to enhance the visual quality and experience in the community by directing future development. The Guidelines address site design and layout, grading, drainage, parking, bicycle parking, visual screening, pedestrian circulation, plazas, building articulation and design, roofs, building height, green building, landscape design, exterior lighting design, and signage.

Located in the Bijou/Al Tahoe Community Plan District 4, Height standards for STPUD facilities may exceed the Height Standards in the TRPA Code of Ordinances based on project setback, visibility, or other design criteria and subject to TRPA review and approval. Land coverage standards follow the TRPA Code of Ordinances limits. Setback standards generally follow the City Design Manual; however, development on the STPUD property shall have a minimum setback of 50 feet from Al Tahoe Blvd. Site design generally follows the City Design Manual, but also requires the natural forest setting remain preserved by designing projects that maintain the maximum number of trees, shrubs, boulders etc. on the site and design landscaping to blend with the native surroundings. Though not applicable to a solar project, site design

standards also require sidewalks to connect all buildings within a project area. Architectural treatments require buildings be designed with interest, incorporating architectural features that blend with surrounding buildings, use wood siding and real stone.

Table 3-2: Aesthetics, Scenic Resources/Community Design and Light and Glare

CEQA Environmental Checklist Item	Potentially Significant Impact	Less Than Significant with Mitigation Measures	Less Than Significant Impact	No Impact
3.4.3-1. Have a substantial adverse effect on a scenic vista? (CEQA Ia)			X	
3.4.3-2. Substantially damage scenic resources, including, but not limited to, trees, rock outcroppings, and historic buildings, within a state scenic highway? (CEQA Ib)			X	
3.4.3-3. Substantially degrade the existing visual character or quality of the site and its surroundings? (CEQA Ic)			X	
3.4.3-4. Create a new source of substantial light or glare, which would adversely affect day or nighttime views in the area? (CEQA Id)			X	
TRPA Initial Environmental Checklist Item	**Yes**	**No, With Mitigation**	**Data Insufficient**	**No**
3.4.3-5. Be visible from any state or federal highway, Pioneer Trail or from Lake Tahoe? (TRPA item 18a)				X
3.4.3-6. Be visible from any public recreation area or TRPA designated bicycle trail? (TRPA item 18b)				X
3.4.3-7. Block or modify an existing view of Lake Tahoe or other scenic vista seen from a public road or other public area? (TRPA item 18c)				X
3.4.3-8. Be inconsistent with the height and design standards required by the applicable ordinance or Community Plan? (TRPA item 18d)				X
3.4.3-9. Be inconsistent with the TRPA Scenic Quality Improvement Program (SQIP) or Design Review Guidelines? (TRPA item 18e)				X
3.4.3-10. Include new or modified sources of exterior lighting? (TRPA item 7a)				X

TRPA Initial Environmental Checklist Item	Yes	No, With Mitigation	Data Insufficient	No
3.4.3-11. Create new illumination which is more substantial than other lighting, if any, within the surrounding area? (TRPA item 7b)				**X**
3.4.3-12. Cause light from exterior sources to be cast off-site or onto public lands? (TRPA item 7c)				**X**
3.4.3-13. Create new sources of glare through the siting of the improvements or through the use of reflective materials? (TRPA item 7d)				**X**

3.4.3-1. Would the Project have a substantial adverse effect on a scenic vista? (CEQA Ia)

As shown in Figure 3.4.3-1, the existing WWTP facilities are not visible from Al Tahoe Blvd or the adjacent bike trail that parallels Al Tahoe Blvd. Existing WWTP facilities are also not visible from Pioneer Trail or US Highway 50. Existing WWTP facilities are visible from the newly constructed South Tahoe Greenway shared-use trail that crosses to the north of the STPUD WWTP property.

The bike trail along Al Tahoe Blvd is a TRPA designated Scenic Bikeway Segment. Therefore, views from the bikeway segment along Al Tahoe Blvd must be considered to determine whether additional development to the east of the existing STPUD WWTP would create adverse impacts to standards. Foreground views would not be affected from Al Tahoe Blvd or the adjacent bike trail, as the nearest proposed solar facilities, the solar array panels and security fencing, would be located over 600 feet from the roadway and bike trail. Existing hillsides along Al Tahoe Blvd and the adjacent conifer forest will obscure distant views toward the proposed solar arrays from Al Tahoe Blvd. While the hillside and forest will screen a majority of the solar facility, it is possible that passing roadway or bike trail users will get a glimpse of the solar facilities as they travel north or south along the transportation corridor.

Figure 3.4.3-2 includes construction details of the proposed solar array and documents that the highest point of the solar panels and fencing are approximately 11 feet off the ground. The solar array will cover approximately 3.3 acres, and total tree removal will include approximately 7 including the buffer areas to the west, south and east. The access roadway and electrical connection trenching would not have any vertical elements and therefore would not be visible from offsite locations. The addition of the proposed solar facility panels may contribute minimally to additional urbanization of the Al Tahoe Blvd. transportation corridor and South Tahoe Greenway shared-use trail corridor, but any glimpses to the solar site from passing motorists or bikers would be consistent with existing views of WWTP facilities, City ballfield facilities, and LTCC campus structures.

Environmental Analysis: *Less than Significant Impact.*

Required Mitigation: **None**

Figure 3.4.3-1. Views of the STPUD WWTP and Proposed Solar Facility Property

View toward existing STPUD WWTP facilities and proposed solar facility location from Al Tahoe Blvd. near eastern most property line.	View toward existing STPUD WWTP facilities and proposed solar facility location from Al Tahoe Blvd.
View toward existing STPUD WWTP facilities and proposed solar facility location from Al Tahoe Blvd. near entrance to City playfields.	View looking east at the proposed location of the solar array field approximately 450 feet east of the existing WWTP facilities.
View from the northeast corner of the WWTP looking east toward the location of the solar array access road corridor.	View from the south end of the WWTP looking east along the trenching corridor that will provide the electrical interconnect wiring to the solar field.

Figure 3.4.3-2. Solar Project Construction Details

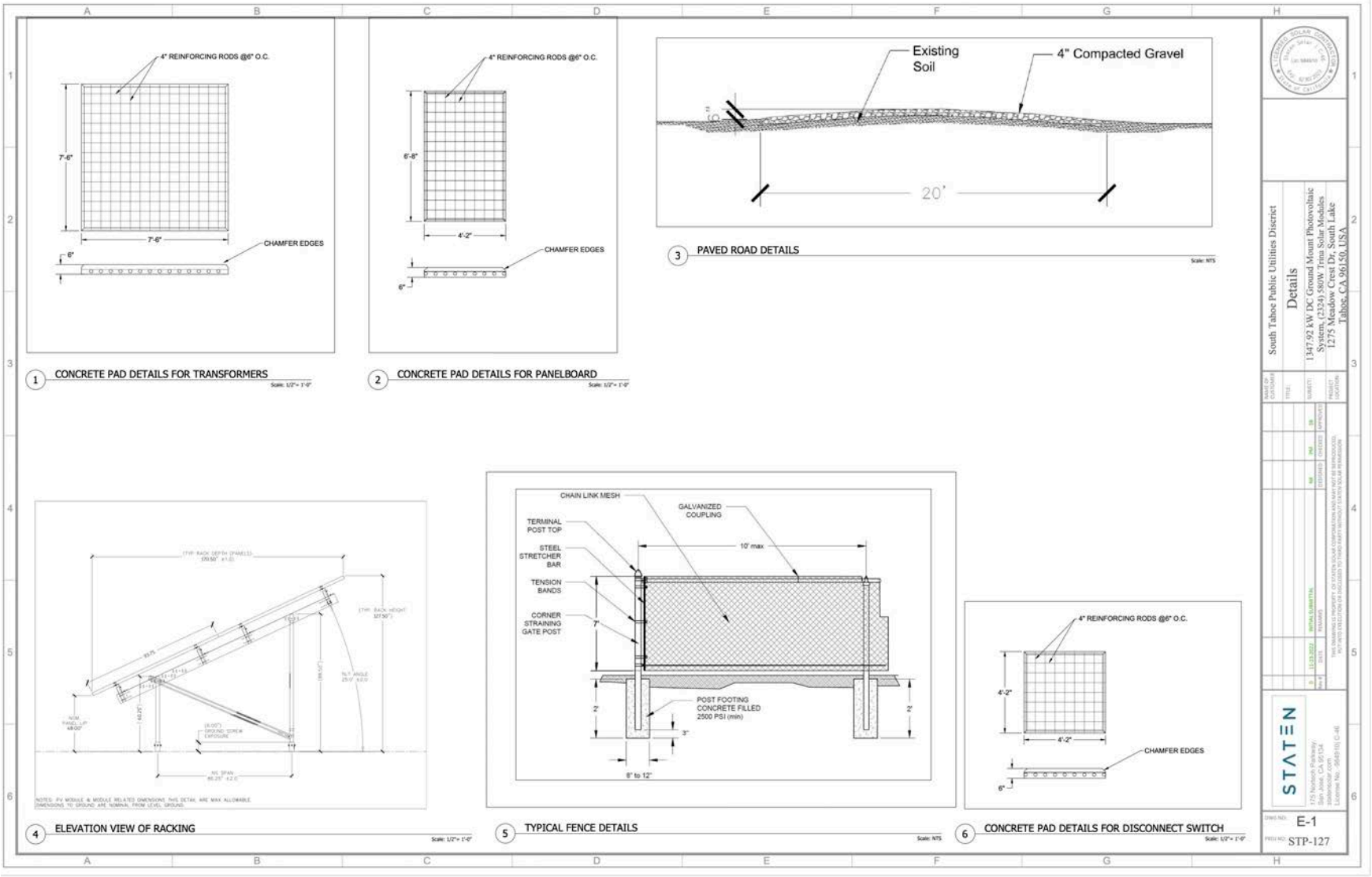

3.4.3-2. Would the Project substantially damage scenic resources, including, but not limited to, trees, rock outcroppings, and historic buildings within a state scenic highway? (CEQA Ib)

No rock outcroppings or historic buildings would be affected by the Solar project and no substantial changes would be visible from U.S. 50 or Pioneer Trail. Approximately 220 trees would be removed during construction of the solar array and 100 foot buffer areas to the west, south and east. These trees are located in the footprint of the proposed improvements as depicted in the site layout (Figure 2-1). Most of the affected area would be at the location of the solar arrays but some tree removal may also be required within the access roadway and electrical trenching.

Tree removal for the solar project is addressed by the state of California TCP/THP. Within the approximately 7 acre area covered by the TCP/THP, a majority of existing trees are to be removed for the solar facility. However, large swaths of trees would be retained onsite surrounding the solar facility, maintaining a vegetated forested area encircling the solar generating facility. Therefore, the overall scenic quality would be retained, and the majority of trees are retained on the STPUD property east of the WWTP. With the TCP/THP addressing approximately 7 of the 114 acre District lands, the removal of the trees within the solar facility that is surrounded by trees to be retained, would not substantially damage scenic resources.

Environmental Analysis: *Less than Significant Impact.*

Required Mitigation: **None**.

3.4.3-3. Would the Project substantially degrade the existing visual character or quality of the site and its surroundings? (CEQA Ic)

Impacts to the visual character of the WWTP area are discussed in Question 3.4.3-1. The visual character of the site is a mixture of native vegetation, including mature trees, and existing WWTP facilities. Existing WWTP facilities primarily include ground level storage tanks and ponds, but also includes one and two-story buildings and associated walkways, paths, parking areas, and driveways.

The addition of the solar facility has the potential to alter views from Al Tahoe Blvd. and from the Greenway shared-use Trail. However, as shown in Figures 2-1 and 3.4.3-1, the solar facility will be placed in the middle of an existing forested area located over 600 feet west of Al Tahoe Blvd. and 800 feet south of the Greenway shared-use trail. The addition of the proposed solar facility structures would contribute to additional urbanization of the area, but when glimpsed by passing trail users would be consistent with existing views of WWTP and LTCC structures.

Environmental Analysis: *Less than Significant Impact.*

Required Mitigation: **None**.

3.4.3-4. Would the Project create a new source of substantial light or glare, which would adversely affect day or nighttime views in the area? (CEQA Id)

Construction of the solar facility will comply with the lighting standards in the Bijou/Al Tahoe Community Plan, City of South Lake Tahoe Code and TRPA Code. No new lighting will be constructed as part of the solar project.

The solar panels used on the solar arrays are very reflective, and the Solar Project would result in a higher intensity of reflection in the immediate vicinity of the solar arrays, though its visibility would be limited to

areas immediately south of the solar arrays and within the STPUD WWTP project area. To avoid or minimize reflection and glare impacts at offsite locations, the solar array location was selected to maintain a minimum of 300 feet of forested buffer in each direction from the facility.

Environmental Analysis: *Less than Significant Impact.*

Required Mitigation: **None**.

3.4.3-5. Would the Project be visible from any state or federal highway, Pioneer Trail or from Lake Tahoe? (TRPA 18a)

The STPUD WWTP is located nearby to Al Tahoe Boulevard between Pioneer Trail and U.S 50 and the north end of the WWTP is adjacent to the South Tahoe Greenway shared-use trail. However, the WWTP is not visible from or adjacent to Pioneer Trail or U.S. 50, and the WWTP structures are not visible from U.S. 50 due to the intervening vegetation and significant setbacks. The Project area is not located in the vicinity of the Lake Tahoe shoreline and is not visible from Lake Tahoe.

Environmental Analysis: *No Impact.*

Required Mitigation: **None.**

3.4.3-6. Would the Project be visible from any public recreation area or TRPA designated bicycle trail? (TRPA 18b)

As discussed above in Question 3.4.3-1 (CEQA Checklist 1a), the WWTP is nearby to the bike trail along Al Tahoe Blvd, the Greenway shared-use trail to the west and north of the WWTP and Heavenly Valley Creek to the south of the WWTP. The Al Tahoe bike trail is a TRPA designated trail evaluated in the 1993 Scenic Resource Evaluation, but the Greenway shared-use trail is not on the official TRPA list. The addition of the proposed solar structures may be visible through the forested buffer from the bike trails, and if so, would contribute to a more urban view from the trails. However, the potential glimpses of the solar arrays would not adversely affect the existing character of the trail corridors within the vicinity of the WWTP and LTCC campus. Likewise, views from Heavenly Valley Creek already include the existing WWTP buildings. The addition of solar facility structures, as viewed through intervening vegetation, would not significantly change the character of the existing views; therefore, the change in the view would not conflict with scenic thresholds and results in no impact.

Environmental Analysis: *Yes/No Impact.*

Required Mitigation: **None.**

3.4.3-7. Would the Project block or modify an existing view of Lake Tahoe or other scenic vista seen from a public road or other public area? (TRPA 18c)

Lake Tahoe is not visible from the STPUD WWTP property and the solar project would not modify any lake views. The solar project would not be visible from designated offsite public areas that have scenic protections such as Heavenly Ski Resort, as the location of the scenic resource is at the California base area parking lot and not at the top of the Heavenly mountain. As discussed in Questions 3.4.3-1 an 3.4.3-2, although the solar panels may be intermittently visible from the Greenway shared-use trail, Heavenly Valley Creek, and Al Tahoe Blvd through the existing large trees to be retained, views of the proposed solar facility from these areas already include views of existing WWTP facilities. The addition of new solar facilities surrounded by forested buffer areas would not result in a significant change to the views of the WWTP

from these public locations and the overall character of undeveloped forest would be retained. As such, the solar facilities would not adversely effect scenic vistas.

Environmental Analysis: *No Impact.*

Required Mitigation: **None**.

3.4.3-8. Would the Project be inconsistent with the height and design standards required by the applicable ordinance or Community Plan? (TRPA 18d)

No lighting or signage is proposed for the solar project. Proposed solar arrays would place solar panels at a maximum height of 11 feet above natural ground elevations, in compliance with TRPA height regulations. The solar facility materials and colors would be consistent with Design standards for solar facilities. The materials and colors are consistent with existing WWTP facilities.

In addition to lighting, signage and height standards, tree removal policies should also be considered in relation to visual impacts and policy compliance. Tree removal can alter the character of a site and increase views of structures. Due to the acreage of tree removal proposed, CalFire requires the issuance of a Timber Conversion Permit and preparation of a Timber Harvest Plan. The permit and plan have been prepared and submitted. As discussed above, approximately 7 acres of the existing forest within the 114 acre STPUD WWTP project development footprint would be cleared for the solar facility.

TRPA Code Section 61.1.4(B) allows the removal of trees larger than 30 inches dbh within non-SEZ urban lands if there is no reasonable alternative, including modification of design or reduction in parking area. Section 61.1.4(C) can also be applied, which states a private landowner may follow Section 61.1.4(A) or one of the listed planning processes to achieve or maintain late seral/old growth thresholds, goals, and policies. The development area is not within a TRPA Conservation or Recreation land use classification, therefore the removal of any native live, dead or dying trees 30 inches dbh or larger would not result in any impact. The existing Jeffrey Pine forest that exists on the STPUD WWTP project area is second growth in nature and is not considered an old grown ecosystem.

Environmental Analysis: *No Impact.*

Required Mitigation: None.

3.4.3-9. Would the Project be inconsistent with the TRPA Scenic Quality Improvement Program (SQIP) or Design Review Guidelines? (TRPA 18e)

See discussion and analysis for Question 3.4.3-1 and 3.4.3-8. The Al Tahoe bike path is considered a scenic resource area, however Al Tahoe Boulevard or the other public areas from which the WWTP is visible, are not. Development within the STPUD WWTP project area would not affect the SQIP.

Environmental Analysis: *No Impact.*

Required Mitigation: **None**.

3.4.3-10. Would the Project include new or modified sources of exterior lighting? (TRPA 7a)

See discussion and analysis for Question 3.4.3-4, which concludes no impact based on maintaining forested buffers around the proposed solar panel arrays.

Environmental Analysis: *No Impact*.

Required Mitigation: **None**.

3.4.3-11. Would the Project create new illumination, which is more substantial than other lighting, if any, within the surrounding area? (TRPA 7b)

See discussion and analysis for Question 3.4.3-4, which concludes no significant impact

Environmental Analysis: *No Impact*.

Required Mitigation: **None**.

3.4.3-12. Would the Project cause light from exterior sources to be cast off-site or onto public lands? (TRPA 7c)

See discussion and analysis for Question 3.4.3-4, which concludes no significant impact.

Environmental Analysis: *No Impact.*

Required Mitigation: **None**.

3.4.3-13 Would the Project create new sources of glare through the siting of the improvements or through the use of reflective materials? (TRPA 7d)

See discussion and analysis for Question 3.4.3-4, which concludes no significant impact.

Environmental Analysis: *No Impact.*

Required Mitigation: **None.**

3.4.4 Agriculture and Forestry Resources

This section presents the analyses for potential impacts to agriculture and forestry resources. Some TRPA checklist items concern impacts to vegetation, which are addressed in Section 3.4.6, Biological Resources. Table 3-3 identifies the applicable impacts, anticipated level of impact, and whether mitigation measures are required to reduce impacts to a less than significant level.

Environmental Setting

There are 1.4 million acres of timberland in El Dorado County. Although partially located in a Town Center and zoned Commercial/Public Services by the City of South Lake Tahoe, the STPUD WWTP property is located in an area categorized by El Dorado County as Forest Resource-160 acres. The City of South Lake Tahoe land classifications adjacent to the WWTP include commercial to the north, recreation to the east and south, and conservation to the west. Since the WWTP property is an active public service facility, there are no active timber production activities on the site and the property is not managed for timber operations.

The site is not categorized as Prime or Unique Farmland or Farmland of Statewide Importance, and no agricultural activities occur on the WWTP properties. There are no District lands under a Williamson Act contract in the WWTP.

STPUD and its development partner, Staten Solar are applying for a Timber Conversion Permit (TCP) and submitting a Timber Harvest Plan (THP) to CalFire to allow for tree removal on the WWTP property as part of the Solar Project. This environmental analysis will be used to support the CalFire TCP and THP approval process.

Table 3-3: Agriculture and Forestry Resources

CEQA Environmental Checklist Item	Potentially Significant Impact	Less Than Significant with Mitigation Measures	Less Than Significant Impact	No Impact
3.4.4-1. Convert Prime Farmland, Unique Farmland, or Farmland of Statewide Importance, as shown on the maps prepared pursuant to the Farmland Mapping and Monitoring Program of the CA Resources Agency, to a non-agricultural use? (CEQA IIa)				X
3.4.4-2. Conflict with existing zoning for agricultural use, or a Williamson Act contract? (CEQA IIb)				X
3.4.4-3. Conflict with existing zoning for, or cause rezoning of, forest land (as defined in Public Resource Code section 12220(g), timberland (as defined by Public Resource Code section 4526) or timberland zoned Timberland				X

Production (as defined by Government Code section 51104(g))? (CEQA IIc)				
3.4.4-4. Result in the loss of forest land or conversion of forest land to non-forest use? (CEQA IId)			**X**	
3.4.4-5. Involve other changes in the existing environment which, due to their location or nature, could result in conversion of Farmland, to non-agricultural use or conversion of forest land to non-forest use? (CEQA IIe)			**X**	

3.4.4-1. Would the Project convert Prime Farmland, Unique Farmland, or Farmland of Statewide Importance (Farmland), as shown on the maps prepared pursuant to the Farmland Mapping and Monitoring Program of the California Resources Agency, to a non-agricultural use? (CEQA IIa)

The STPUD WWTP property is partially developed and is not located in an area identified as Prime Farmland, Unique Farmland, or Farmland of Statewide Importance (Farmland), as shown on the maps prepared pursuant to the Farmland Mapping and Monitoring Program of the California Resources Agency, and therefore poses no impact to such lands.

Environmental Analysis: *No Impact.*

Required Mitigation: **None**.

3.4.4-2. Would the Project conflict with existing zoning for agricultural use, or a Williamson Act contract? (CEQA IIb)

No conflicts with zoning for agricultural use or a Williamson Act contract would occur because no contracts exist within the project area.

Environmental Analysis: *No Impact.*

Required Mitigation: **None**.

3.4.4-3. Would the Project conflict with existing zoning for, or cause rezoning of, forest land (as defined in Public Resource Code section 12220(g), timberland (as defined by Public Resource Code section 4526) or timberland zoned Timberland Production (as defined by Government Code section 51104(g))? (CEQA IIc)

Public Resources Code section 12220(g) defines forest land as, "land that can support 10-percent native tree cover of any species, including hardwoods, under natural conditions, and that allows for management of one or more forest resources, including timber, aesthetics, fish and wildlife, biodiversity, water quality, recreation, and other public benefits." Since this area is already partially developed, such canopy coverage does not exist in the project area. The area is not currently identified as a commercial timber harvest zone. The amendment conflicts with no zoning of and causes no rezoning of forest land, timberland or timberland zoned Timberland Production.

A TCP application is being submitted to CalFire for the conversion of forested area on approximately 7 acres out of 114 acres of the District's WWTP properties. As such, once approved, the TCP/THP will allow the District to convert approximately 6 percent of their WWTP lands and less than 0.001 percent of timberland in El Dorado County. Approximately 220 trees would be removed within the proposed conversion areas, primarily within the clearing required for the solar arrays. Trees that would be removed under the TCP/THP would be cut down and ground skidded, or carried to a central WWTP loading site for eventual offsite removal. The removed trees would be located within solar field, access road, or electrical trenching footprints. Trees outside these footprints would be retained.

The proposed use of the land is for green electrical power generation to support existing WWTP operations, and is not for a new land use. Although the project would convert land that the State identifies as timberland, the site has long been identified as a public service site by local authorities and the project would include the required permit necessary to convert the land owned by STPUD for expanded public service facilities.

Environmental Analysis: *No Impact.*

Required Mitigation: **None**.

3.4.4-4. Would the Project result in the loss of forest land or conversion of forest land to non-forest use? (CEQA IId)

The loss of substantial forest land defined above for Question 3.4.4-3, or conversion of forest land to non-forest use creates a significant impact if appropriate permits are not obtained. Since the STPUD WWTP TCP/THP is being processed, no significant impact would result following compliance with CalFire Acts and regulations. It should also be noted that although the land is characterized by the state as timberland, no forestry operations occur on the STPUD WWTP property. Only trees within the Solar Project facilities footprint would be removed – a majority of existing trees would be retained. As noted in Question 3.4.4-3, forest land within the STPUD WWTP property is not considered official "timberland" and would be used for support of existing public service facilities and the required permit is included as a component of the project.

Environmental Analysis: *Less than Significant Impact*

Required Mitigation: **None**.

3.4.4-5. Would the Project involve other changes in the existing environment which, due to their location or nature, could result in conversion of Farmland, to non-agricultural use or conversion of forest land to non-forest use? (CEQA IIe)

See discussions and analyses for Questions 3.4.4-2, -3, and -4 which conclude no significant impacts to farmland or forest land would occur.

Environmental Analysis: *Less than Significant Impact.*

Required Mitigation: **None**.

3.4.5 Air Quality

This section presents the analyses for potential impacts to air quality. Table 3-5 identifies the applicable impacts, anticipated level of impact, and whether mitigation measures are required to reduce impacts to a less than significant level.

Environmental Setting

The United States Environmental Protection Agency (EPA) established National Ambient Air Quality Standards (NAAQS) for ozone (O_3), nitrogen dioxide (NO_2), carbon monoxide (CO), sulfur dioxide (SO_2), respirable particulate matter (with aerodynamic diameter less than or equal to a nominal 10 micrometers, PM_{10}), fine particulate matter (with aerodynamic diameter less than or equal to a nominal 2.5 micrometers, $PM_{2.5}$), and airborne lead. The NAAQS are of two types: primary and secondary. Primary standards are designed to protect human health, including the health of "sensitive" populations, such as asthmatics, children, and the elderly, with an adequate margin of safety. Secondary standards are designed to protect public welfare, including protection against decreased visibility and harm to animals, crops, vegetation, and buildings. The EPA can designate areas with air pollution concentrations above these standards as "nonattainment areas" subject to planning and pollution control requirements.

The California Air Resources Board (CARB) established California ambient air quality standards (CAAQS) for ozone, CO, NO_2, SO_2, sulfates, PM_{10}, $PM_{2.5}$, airborne lead, hydrogen sulfide, and vinyl chloride at levels designed to protect the most sensitive members of the population, particularly children, the elderly, and people who suffer from lung or heart diseases.

STPUD WWTP lands are located within the El Dorado County Air Quality Management District (EDCAQMD). The Region is designated non-attainment for PM_{10}, as presented in Table 3-4. A significant cumulative impact results if the Project causes a considerable increase in PM_{10}.

Table 3-4: Federal and State Attainment Status for the Lake Tahoe Air Basin

Pollutant	CA Status	Federal Status
1-Hour Ozone	Attainment	--
8-Hour Ozone	Attainment	Attainment/Unclassified
PM_{10}	Nonattainment	Attainment/Unclassified
$PM_{2.5}$	Not Applicable	Attainment/Unclassified
CO	Attainment	Attainment/Unclassified
NO_2	Attainment	Attainment/Unclassified
SO_2	Attainment	Attainment/Unclassified
All Others	Attainment (Sulfates/Lead)/Unclassified (Hydrogen Sulfide and Visibility Reducing Particles)	--

Source: CARB 2019 (https://ww2.arb.ca.gov/resources/documents/maps-state-and-federal-area-designations)and US EPA 2020 (https://www.epa.gov/green-book).

EDCAQMD established a project-level average daily pollutant emission significance threshold of 82 lbs/day for NOx or ROG emitted by any combination of equipment. Construction emissions of PM10 or CO should not violate ambient air quality standards. Heavy-duty Diesel-fueled mobile pieces of equipment are the dominant sources of criteria pollutant emissions generated by construction. For operation of a proposed project, the same project-level average daily significance threshold of 82 lbs/day was set by the District for NOx or ROG emissions from all sources. The District considers CO, PM10 and SO2 emissions

from operation of a land development project to be less than significant if the NOx and ROG emissions from the project are less than the same 82 lbs/day limit.

Table 3-5: Air Quality				
CEQA Environmental Checklist Item	**Potentially Significant Impact**	**Less Than Significant with Mitigation Measures**	**Less Than Significant Impact**	**No Impact**
5.4.5-1. Conflict with or obstruct implementation of the applicable air quality plan? (CEQA IIIa)				**X**
5.4.5-2. Result in a cumulatively considerable net increase of any criteria pollutant for which the project region is non-attainment under applicable federal or state ambient air quality standards? (CEQA IIIb)				**X**
5.4.5-3. Expose sensitive receptors to substantial pollutant concentrations? (CEQA IIIc)				**X**
5.4.5-4. Result in other emissions, such as objectionable odors, adversely affecting a substantial number of people? (CEQA IIId)				**X**
TRPA Initial Environmental Checklist Item	**Yes**	**No, With Mitigation**	**Data Insufficient**	**No**
5.4.5-5. Substantial air pollutant emissions? (TRPA 2a)				**X**
5.4.5-6. Deterioration of ambient (existing) air quality? (TRPA 2b)				**X**
5.4.5-7. Creation of objectionable odors? (TRPA 2c)				**X**

3.4.5-1. Would the Project conflict with or obstruct implementation of the applicable air quality plan? (CEQA IIIa)

The proposed STPUD Solar Project would not alter, revise, conflict or obstruct the regulations pertaining to air quality and proposes no changes to air quality policies. Development of the Solar project increases the availability of clean energy for operation of the WWTP, thereby reducing the District's reliance on the electrical grid. This operational impact is considered to be a beneficial impact to air quality emissions. As shown in the Transportation Analysis, there are only a few vehicle trips associated with operation and maintenance of the Solar facility. Operational emissions from the solar facility would be minimal and would not exceed emissions thresholds.

The Lake Tahoe Region is in attainment or designated as unclassified for all National Ambient Air Quality Standards (NAAQS) and is designated a nonattainment/transitional area for ozone and nonattainment for the PM10 California ambient air quality standards (CAAQS). The construction emissions threshold for particulate matter is 82 lbs/day.

Short-Term Construction Emissions

Although the site is relatively flat, development of the Solar facility would involve extensive tree removal, some grading for construction of the access roadway, and a degree of construction activity and construction emissions. Construction emissions are described as short-term or temporary in duration. Reactive Organic Gases (ROG), Carbon Monoxide (CO) and Nitrogen Oxides (NOx) (ozone precursors) emissions are primarily associated with gas and diesel equipment exhaust and the application of architectural coatings on the solar racking. Fugitive dust emissions (PM10 and PM2.5) are primarily associated with site preparation and vary as a function of such parameters as soil silt content, soil moisture, wind speed, acreage or disturbance area, and vehicle travel by construction vehicles on- and off-site.

Construction would result in the temporary generation of ozone precursor and fugitive dust emissions from site preparation; off-road equipment, material import/export, worker commute exhaust emissions; paving; and other miscellaneous activities. Typical construction equipment includes dozers, graders, excavators, loaders, and trucks. Emissions of airborne particulate matter are largely dependent on the amount of ground disturbance associated with site preparation activities. Due to the limited duration of construction activities associated with tree removal and installation of the solar panels (construction is planned over several months), emissions associated with construction would not exceed EDCAQMD significance thresholds. Air emissions would be minimized during construction as staging would occur in paved or compacted areas, the entrance to construction areas would be stabilized with aggregate rock, construction equipment speeds would be limited to 5 miles per hour, exposed and stockpiled soils would be covered to prohibit wind or water erosion, grading would be minimized and balanced onsite, and disturbed soils outside the structural footprint would be reseeded with native species to stabilize soils.

In accordance with local requirements, construction idling time would be limited to 5 minutes and construction equipment engine doors would be closed while operating to reduce emissions output. No burning of debris is proposed, and demolished walkways and pathways would be recycled and reused.

Environmental Analysis: *No Impact.*

Required Mitigation: **None.**

3.4.5-2. Would the Project result in a cumulatively considerable net increase of any criteria pollutant for which the project region is non-attainment under applicable federal or state ambient air quality standards (including releasing emissions which exceed quantitative thresholds for ozone precursors)? (CEQA IIIb)

The Region is designated non-attainment/transitional for ozone and non-attainment for PM_{10}, as presented in Table 3-4. A significant cumulative impact results if the Project causes a considerable increase in PM_{10} and Ozone.

In the project area, these pollutants relate to automobile use and potential impacts measured with VMT calculations and wood burning fireplaces and stoves. No single project is sufficient in size, by itself, to result in nonattainment of ambient air quality standards. Instead, a project's individual emissions contribute to existing cumulatively significant adverse air quality impacts. With respect to ozone precursors and PM_{10},

consistent with the Regional Plan, operation of the Solar facility would not contribute to long-term operational emissions, including mobile emissions.

The Solar Project does not propose any burning of fuels during construction or operation. PM_{10} emissions would be minimized during construction as staging would occur in paved or compacted areas, the entrance to construction areas would be stabilized with aggregate rock, construction equipment speeds would be limited to 5 miles per hour, exposed and stockpiled soils would be covered to prohibit wind or water erosion, grading would be minimized and balanced onsite, and disturbed soils outside the structural footprint would be reseeded with native species to stabilize soils. Removal of trees associated with the TCP/THP using mechanical equipment would also be below the construction emissions threshold and would result in no significant emissions.

Environmental Analysis: *No Impact.*

Required Mitigation: **None.**

3.4.5-3. Would the Project expose sensitive receptors to substantial pollutant concentrations? (CEQA IIIc)

Operation of the Solar facility would not result in a change to existing pollutant concentrations at the WWTP.

Environmental Analysis: *No Impact.*

Required Mitigation: **None.**

3.4.5-4. Would the Project result in other emissions, such as objectionable odors, adversely affecting a substantial number of people? (CEQA IIId)

Operation of solar power generating facilities do not emit any odors.

Environmental Analysis: *No Impact.*

Required Mitigation: **None.**

3.4.5-5. Would the Project result in substantial air pollutant emissions? (TRPA 2a)

3.4.5-6. Would the Project result in deterioration of ambient (existing) air quality? (TRPA 2b)

See analyses for Questions 3.4.5-1 and 3.4.5-2.

Environmental Analysis: *No Impact.*

Required Mitigation: **None.**

3.4.5-7. Would the Project result in creation of objectionable odors? (TRPA 2c)

See analysis for Question 3.4.5-4.

Environmental Analysis: *No Impact.*

Required Mitigation: **None.**

3.4.6 Biological Resources (Stream Environment Zones, Wetlands, Wildlife and Vegetation)

This section presents the analyses for potential impacts to biological resources, including impacts to SEZs, wetlands, wildlife and vegetation. Table 3-6 identifies the applicable impacts, anticipated level of impact, and whether mitigation measures are required to reduce impacts to a less than significant level.

Environmental Setting:

The STPUD wastewater treatment plant is located in South Lake Tahoe, California. The Project area is located in section 3 of Township 12 North, Range 18 East. Elevation range of the Project area ranges between 6300 to 6340 feet above mean sea level (msl).

The Project Area, immediately east of the WWTP is characterized by an early to mid-successional forest stand consisting primarily of Jeffrey Pine Forest. This forest association occurs on well-drained, high elevation sites between 6,000 and 8,000 feet above mean se level (Holland 1986). The dominant tree species is Jeffrey pine (*Pinus jeffreyi*). The understory is sparse and consists of small sapling trees, shrubs, and herbs. The species on the site include lodge pole pine (*Pinus contorta*), antelope bitterbrush (*Purshia tridentata*), sagebrush (*Artemisia tridentata*), and mules ears (*Wyethia mollis*). Very few snags are present within the Project area. Canopy closure is characterized as fairly open ranging from 10-50%, and very little down woody debris is present. The Project area was thinned prior to the development of the area in the mid 1980s and mechanically thinned for fuels management in 2020.

Trout Creek and Heavenly Valley Creek are the only stream habitats that are adjacent or in close proximity to the Project area. Trout Creek lies to the west of the Project area from the Martin Avenue Bridge and flows to the north to under the bridge at US 50. Heavenly Valley Creek lies just south of the project area and flows into Trout Creek. Stream Environment Zone (SEZ) habitats exist along the margins of both Trout Creek and Heavenly Valley Creek that flows south to north outside the Project area.

The project area also contains small patches of sagebrush and montane chaparral associations. The sagebrush vegetation community is dominated by Basin sagebrush (*Artemisia tridentata*), but may also include components of the montane chaparral association. Characteristic species in the montane chaparral association include mountain whitethorn (*Ceanothus cordulatus*), chinquapin (*Castanopsis sempervirens*), and huckleberry oak (*Quercus vaccinifolia*). Characteristic understory species found within various communities in the project area include: greenleaf manzanita (*Arctostaphylos patula*), beardtongue (*Penstemon sp*.), currant (*Ribes sp*.), mule ears (*Wyethia sp*.), mountain whitethorn (*Ceanothus cordulatus*), serviceberry (*Amelanchier sp*.), huckleberry oak (*Quercus vaccinifolia*), California lilac (*Ceanothus velutinus*), young white fir (*Abies concolor*), willow (Salix sp.), quaking aspen (*Populus tremuloides*), corn lily (*Veratrum sp*.), and bracken fern (*Pteridium aquilinum*).

Wildlife use of the Project area is minimal as there is a low diversity of habitats within the project area. Adjacent habitats close to the Project Area include riparian, upland forest, meadow, urban with various levels of disturbance and human presence. The Project area provides habitat for numerous small mammals, including golden-mantled ground squirrel (*Spermophilus lateralis*), Belding's ground squirrel (*Spermophilus beldingi*), Douglas' squirrel (*Tamiasciurus douglasii*), several species of chipmunk (*Tamias spp*.), and a variety of smaller rodents.

Larger mammals known to occur in the vicinity of the Project area include coyote (*Canis latrans*), bobcat (*Lynx rufus*), mountain lion (*Felis concolor*), black bear (*Ursus americanus*), and mule deer (*Odocoileus hemionus*). Mule deer are regularly observed in the vicinity of the Project area. These deer are part of the Carson River Deer Herd that occupies the eastern slope of the Sierra Nevada in Alpine and El Dorado

counties in California and Douglas County in Nevada. The Project area is within the western end of the herd's range (NDOW 1975).

A wide variety of resident and migratory bird species nest and forage on or in the vicinity of the STPUD Project area. Clark's nutcrackers (*Nucifraga columbiana*) and Steller's jays (*Cyanocitta stelleri*) can be found year-round throughout the Project area and surrounding forested lands. Mountain chickadee (*Parus gambeli*), evening grosbeak (*Coccothraustes vespertinus*), and white-breasted nuthatch (*Sitta carolinensis*) may also be found year-round, while other species such as western tanager (*Piranga ludoviciana*) and western wood pewee (*Contopus sordidulus*) are summer residents only. A variety of woodpeckers, including northern flicker (*Colaptes auratus*) and hairy woodpecker (*Picoides villosus*), are commonly observed in association with forested habitats in the Project area. Typical raptors include red-tailed hawk (*Buteo jamaicensis*), Cooper's hawk (*Accipiter cooperii*), and turkey vulture (*Cathartes aura*).

Reptiles are represented within the Project area by species such as the western fence lizard (*Sceloporus occidentalis*), northern alligator lizard (*Gerrhonotus coeruleus*), rubber boa (*Charina bottae*), and western terrestrial garter snake (*Thamnophis elegans*). Amphibians include the Pacific chorus frog (*Pseudacris regilla*).

Tables 3-7 and 3-8 present a list of special-status species with potential to occur in the Project area or vicinity. The tables provides the current state, federal, or other agency status; a description of the habitat utilized by each of these species; and an evaluation of the potential for each species to occur in the Project area.

Table 3-7

Special-Status Species that May Occur in the Project Area or Vicinity

Species	Status			Habitat Description	Likelihood of Occurrence Within Project Area
	Federal	State	TRPA		
Fish					
Lahontan cutthroat trout *Oncorhynchus (=Salmo) clarki henshawi*	FT MI	ST	S	Historically occurred in all accessible cold waters of the Lahontan Basin in a wide variety of water temps and conditions. Cannot tolerate presence of other salmonids. Gravel riffles in streams required for breeding.	None; LCT have been stocked in Lake Tahoe and Trout and Heavenly Creeks offers no barrier to upstream movement. Project area does not include development in stream channels Heavenly Valley or Trout Creek area nor do either exist within the project area.
Insects					
Monarch butterfly *Danaus plexippus*	FC	--	--	During the breeding season, monarchs lay their eggs on their obligate milkweed host plant (primarily Asclepias spp.), and larvae emerge after two to five days. The larva then pupates into a chrysalis before emerging 6 to 14 days later as an adult butterfly. Monarch butterflies require a diversity of blooming nectar producing plants, on which they feed throughout their migration and on breeding grounds in addition to the milkweed noted above. In the western US, nectar and milkweed resources are often associated with riparian corridors.	Low; minimal suitable habitat present onsite as limited flowering plants present and no milkweed observed.
Amphibians					
Sierra Nevada yellow-legged frog *Rana sierrae*	FE	ST	--	Inhabits ponds, lakes, and streams associated with montane riparian, lodgepole pine, subalpine conifer, and wet meadow communities.	None; montane riparian and wet meadow communities within the

Table 3-7

Special-Status Species that May Occur in the Project Area or Vicinity

Species	Status			Habitat Description	Likelihood of Occurrence Within Project Area
	Federal	State	TRPA		
					margins of Trout Creek or Heavenly Valley Creek may provide suitable habitat but are outside the Project area.
Birds					
Bald eagle *Haliaeetus leucocephalus*	--	SE CFP	SI	Breeds and roosts in remote coniferous forests in close proximity to a river, stream, lake, reservoir, marsh, or other wetland area.	Low; nearest sighting is 1.5 mile from Project area.
California spotted owl *Strix occidentalis occidentalis*	PT	--	--	In the Sierra Nevada, the major forest types comprising known and potential habitat include mixed conifer, red fir, ponderosa pine/hardwood, eastside pine, and foothill riparian/hardwood forests (Verner, et al. 1992). Mixed conifer forest is the most abundant forest type and contains most of the known owl sites. Nest stands typically include a mixture of tree sizes with a number of very large, tall, old trees and usually at least two canopy layers. Large snags and an accumulation of downed woody debris are usually present. Foraging habitat is similar in structure and composition, but also comprises more open stands with canopy covers down to 40 percent.	None; late-seral forest not present within Project area.
Bank swallow *Riparia riparia*	--	ST	--	Inhabits riparian and other lowland habitats. Requires vertical banks or cliffs with fine textured, sandy soils near streams.	Low; nearest sighting is over 1.7 miles from the Project area.
Willow flycatcher *Empidonax traillii*	--	SE	--	Typically breeds in willow-dominated riparian vegetation along perennial streams in moist meadows or spring-fed or boggy areas.	None; montane riparian and wet meadow communities within the

Table 3-7

Special-Status Species that May Occur in the Project Area or Vicinity

Species	Status			Habitat Description	Likelihood of Occurrence Within Project Area
	Federal	State	TRPA		
					margins of Trout Creek or Heavenly Valley Creek may provide suitable habitat but are outside the Project area.
Mammals					
North American wolverine *Gulo gulo luscus*	FPT	--	--	Found in very remote areas of northern North America and high elevation areas of the Sierra Nevada. Typically associated with areas of low human disturbance.	None; potentially suitable habitat is not present within the Project area.
West Coast fisher *Pekania pennanti*	--	ST CSC	--	Occurs in intermediate to large tree stages of coniferous forests and deciduous-riparian areas with high percent canopy closure. Uses cavities, snags, logs, and rocky areas for cover and denning. Needs large areas of mature, dense forest.	None; potentially suitable habitat is not present within the Project area.

Source: CDFW, USFWS 2020

Federal Status:

- FE Listed as endangered under the Federal Endangered Species Act
- FT Listed as threatened under the Federal Endangered Species Act
- FPT Proposed threatened
- FSC Species of concern as identified by the U.S. Fish and Wildlife Service
- D Delisted in accordance with the Federal Endangered Species Act

State Status:

- SE Listed as endangered under the California Endangered Species Act
- ST Listed as threatened under the California Endangered Species Act
- SCE Candidate endangered
- CSC Species of concern as identified by the California Department of Fish and Wildlife
- CFP Listed as fully protected by the California Fish and Game Code

TRPA Status:

- SI Species of Special Interest to the Tahoe Regional Planning Agency

Table 3-8

Special-Status Plants that May Occur in the Project Area or Vicinity

Species	Status				Habitat Description	Bloom Period	Likelihood of Occurrence Within Project Area
	Federal	State	CNPS	TRPA			
Galena Creek (=Carson Range) rock cress *Boechera rigidissima* var. *demota*	FSS	--	1B	SI	Broadleaved upland forest, upper montane coniferous forest on rocky substrates. Known in CA from only two occurrences near Martis Peak, and in NV from eleven occurrences in the Carson Range. Elevational range 2,255-2,560m.	August	Low; not previously observed on site, potentially suitable habitat is not present on site.
Bolander's bruchia *Bruchia bolanderi*	FSS	--	4	--	Lower montane coniferous forest, meadows, and seeps, and upper montane coniferous forest. Grows on damp clay soils along streambanks, meadows, fens, and springs. Disturbance adapted with an ephemeral nature. Elevational range 1,610-3,340m.	Not applicable	Low; not previously observed on site, potentially suitable habitat is not present on site.
Blandow's bog moss *Helodium blandowii*	FSS	--	2B	--	Meadows and seeps and subalpine coniferous forest. Moss grows on damp soil, especially under willows among leaf litter. Elevational range 1,490-3,050m.	Not applicable	Low; not previously observed on site, potentially suitable habitat is not present on site.
Three-ranked hump moss *Meesia triquetra*	--	--	4	--	Bogs and fens, meadows and seeps, upper montane coniferous forest, and subalpine coniferous forest. Grows on mesic soil. Elevational range 1,300-2,955m.	July	Low; not previously observed on site, potentially suitable habitat is not present on site.
Broad-nerved hump moss *Meesia uliginosa*	FSS	--	2B	--	Bogs and fens, meadows and seeps, upper montane coniferous forest, and	October	Low; not previously observed on site,

Table 3-8

Special-Status Plants that May Occur in the Project Area or Vicinity

Species	Status				Habitat Description	Bloom Period	Likelihood of Occurrence Within Project Area
	Federal	State	CNPS	TRPA			
					subalpine coniferous forest. Grows on damp soil, often found on the edge of fens or raised above the fen on hummocks or shrub bases. Elevational range 1,095-2,805m.		potentially suitable habitat is not present on site.
Western waterfan lichen *Peltigera gowardii*	FSS	--	4	--	Found in riparian forest on rocks in cold water creeks with little or no sediment or disturbance, often associated with rich bryophyte flora. Elevational range 1,065-2,375m	Not applicable	Low; not previously observed on site, potentially suitable habitat is not present on site.
Upswept moonwort *Botyrchium ascendens*	FSS	--	2B	--	Grassy fields and coniferous woods near springs and creeks of montane coniferous forest. Elevational range 1,500-2,060m.	Not applicable	Low; not previously observed on site, potentially suitable habitat is not present on in development area.
Scalloped moonwort *Botyrchium crenulatum*	FSS	--	2B	--	Saturated soils in margins of small streams or near springs and creeks of montane coniferous forest. Elevational range 1,500-2,060m.	Not applicable	Low; not previously observed on site, potentially suitable habitat is not present on in development area.
Mingan moonwort *Botyrchium minganense*	FSC	--	2	--	The habitat of B. minganense varies widely from dense forest to open meadow and from summer-dry meadows to permanently saturated fens and seeps. When in meadows, plants may stand in open sun or under dense herbaceous cover. The	Not applicable	Low; not previously observed on site, potentially suitable habitat is not present on in development area.

Table 3-8

Special-Status Plants that May Occur in the Project Area or Vicinity

Species	Status				Habitat Description	Bloom Period	Likelihood of Occurrence Within Project Area
	Federal	State	CNPS	TRPA			
					species is often found in association with old (>10 year) disturbances such as logging roads and road shoulders. B. minganense may be less closely associated with calcareous soils than most moonworts. 4,773–6,750 ft. (1455-2055 m)		
Alpine dusty maidens *Chaenactis douglasii* var. *alpina*	--	--	2	--	Alpine boulder and rock fields of granite. Elevational range 3,000-4,000m.	July-September	None; suitable habitat not present within Project area.
Starved daisy *Erigeron miser*	FSS	--	1B	--	Upper montane coniferous forest on rocky, granitic outcrops. Elevational range 1,550-2,775m	June-October	None; suitable habitat not present within Project area.
Subalpine cryptantha *Cryptantha crymophila*	--	--	1B	--	Volcanic rocky sites in subalpine coniferous forest. Elevational range 2,600-3,200m.	July-August	None; suitable habitat not present within Project area.
Tahoe draba *Draba asterophora* var. *asterophora*	FSS	--	1B	SI	Alpine boulder and rock fields in crevices, and open talus slopes of decomposed granite in subalpine coniferous forest. Elevational range 2,500-3,505m.	July-August	None; suitable habitat not present within Project area.
Cup Lake draba *Draba asterophora* var. *macrocarpa*	FSS	--	1B	SI	Alpine boulder and rock fields in shade of granitic rocks in subalpine coniferous forest. Elevational range 2,500-2,815m.	July-August	None; suitable habitat not present within Project area.

Table 3-8

Special-Status Plants that May Occur in the Project Area or Vicinity

	Status						
Species	**Federal**	**State**	**CNPS**	**TRPA**	**Habitat Description**	**Bloom Period**	**Likelihood of Occurrence Within Project Area**
Marsh skullcap *Scutellaria galericulata*	--	--	2B	--	Marshes and swamps, lower montane coniferous forest, meadows and seeps. Found in swamps and wet areas. Elevational range 0-1,950m	June-September	None; suitable habitat not present within Project area.
Cream-flowered bladderwort *Utricularia ochroleuca*	--	--	2B	--	Meadows, seeps, marshes and swamps on mesic sites, including lake margins. Elevational range 1,310-2,350m.	June-July	None; suitable habitat not present within Project area.
Marsh willowherb *Epilobium palustre*	--	--	2B	--	Bogs, fens and meadows of montane coniferous forest. Elevational range 2,200m.	July-August	None; suitable habitat not present within Project area.
Subalpine fireweed *Epilobium howellii*	--	--	4	--	Meadows and seeps, and subalpine coniferous forests in mesic environments. Known from only four occurrences in Fresno, Mono, and Sierra counties. Elevational range 2,000-2,700m.	July-August	Low; potentially suitable habitat is present on site along Trout Creek and Heavenly Valley Creek. No documented occurrences in the Lake Tahoe Region.
Jack's wild buckwheat *Eriogonum luteolum* var. *saltuarium*	FSS	--	1B	--	Upper montane coniferous forest and Great Basin scrub on sandy and granitic substrates. Elevational range 1,885-2,225m.	July-September	None; suitable habitat not present within Project area.
Carson Valley monkeyflower *Erythranthe carsonensis*	--	--	1B	--	Granitic openings in Great Basin scrub. Elevation 1,480m.	April-June	None; suitable habitat not present within Project area.

Table 3-8

Special-Status Plants that May Occur in the Project Area or Vicinity

	Status						Likelihood of Occurrence Within Project Area
Species	**Federal**	**State**	**CNPS**	**TRPA**	**Habitat Description**	**Bloom Period**	
Fell-fields claytonia *Claytonia megarhiza*	--	--	2B	--	In crevices between rocks, rocky or gravelly soil in alpine boulder and rock fields, and subalpine coniferous forest. Elevational range 2,560-3,505m.	July-September	None; suitable habitat not present within Project area.
Long-petaled lewisia *Lewisia longipetala*	FSS	--	1B	SI	Alpine boulder and rock fields in subalpine coniferous forest. Elevational range 2,500-2,925m.	June-August	None; suitable habitat not present within Project area.
Golden violet *Viola purpurea* ssp. *aurea*	--	--	2B	--	Great Basin scrub and pinyon-juniper woodland on dry sandy slopes. Elevational range 1,000-2,500m.	April-June	None; suitable habitat not present within Project area.
Austin's astragalus *Astragalus austiniae*	--	--	1B	--	On rocky terrain in alpine boulder and rock field, and subalpine coniferous forest. Elevational range 2,440-2,965m.	July-September	None; suitable habitat not present within Project area.
Stebbins' phacelia *Phacelia stebbinsii*	FSS	--	1B	--	Lower montane coniferous forest, cismontane woodland, meadows and seeps. Found among rocks and rubble on metamorphic rock benches. Elevational range 605-2,320m.	May-July	None; suitable habitat not present within Project area.
Davy's sedge Carex davyi	--	--	1B	--	Subalpine coniferous forest, and upper montane coniferous forest. Elevational range 1,605-3,230m.	May-August	Low; not previously observed on site, potentially suitable habitat is not present on site.

Table 3-8

Special-Status Plants that May Occur in the Project Area or Vicinity

	Status						Likelihood of Occurrence Within Project Area
Species	**Federal**	**State**	**CNPS**	**TRPA**	**Habitat Description**	**Bloom Period**	
Porcupine sedge *Carex hystericina*	--	--	2B	--	Marshes and swamps, wet places such as stream edges. Elevational range 225-2,400m.	May-June	None; suitable habitat not present within Project area.
Mud sedge *Carex limosa*	--	--	2B	--	Bogs and fens, lower montane coniferous forest, meadows and seeps, marshes and swamps, and upper montane coniferous forest. Found in floating bogs and soggy meadows and edges of lakes. Elevational range 1,370-2,790m.	June-August	None; suitable habitat not present within Project area.
Tahoe yellow cress *Rorippa subumbellata*	FSS	SE	1B	SI	Lower montane coniferous forest, meadows and seeps / decomposed granitic beaches. Known in CA from fewer than ten extant occurrence around Lake Tahoe. Elevational range 1,895-1,900m.	May-September	None; suitable habitat not present within Project area.
Tulare rockcress *Boechera tularensis*	FSS	--	1B	--	Rocky slopes in subalpine coniferous forest and montane coniferous forest. Elevational range 1,825-3,355m.	June-July	None; suitable habitat not present within Project area.
Watershield *Brasenia schreberi*	--	--	2B	--	Freshwater marshes and swamps. Elevational range 1-2,180m.	June-September	None; suitable habitat not present within Project area.
Water bulrush *Scirpus subterminalis*	--	--	2B	--	Bogs, fens, marshes, swamps and lake margins of montane coniferous forest. Elevational range 750-2,250m.	July-August	None; suitable habitat not present within Project area.

Table 3-8

Special-Status Plants that May Occur in the Project Area or Vicinity

Species	Status				Habitat Description	Bloom Period	Likelihood of Occurrence Within Project Area
	Federal	State	CNPS	TRPA			
American manna grass *Glyceria grandis*	--	--	2B	--	Bogs and fens, meadows and seeps, marshes and swamps. Found in wet meadows ditches, streams and ponds, in valleys, and lower mountain elevations. Elevational range 600-2,045m.	June-August	None; suitable habitat not present within Project area.
Slender leaved pondweed *Stuckenia filiformis* ssp. *alpina*	--	--	2B	--	Shallow, clear water of lakes and drainage channels, marshes and swamps. Elevational range 5-2,325m.	May-July	None; suitable habitat not present within Project area.
Robbins' pondweed *Potamogeton robbinsii*	--	--	2B	--	Deep water, lakes, marshes and swamps. Elevational range 1,525-3,495m	June-August	None; suitable habitat not present within Project area.

Source: CDFW, CNPS, USFWS 2020

Federal status:

FSC Species of concern as identified by the U.S. Fish and Wildlife Service

FSS USDA, Forest Service sensitive species

State Status:

SE Listed as endangered under the California Endangered Species Act

California Native Plant Society Listing Categories (CNPS 2001):

1B Plant species that are rare, threatened, or endangered in California and elsewhere

2 Plant species that are rare, threatened, or endangered in California, but are more common elsewhere

TRPA Status:

SI Species of Special Interest to the Tahoe Regional Planning Agency

Table 3-6: Biological Resources				
CEQA Environmental Checklist Item	**Potentially Significant Impact**	**Less Than Significant with Mitigation Measures**	**Less Than Significant Impact**	**No Impact**
3.4.6-1. Have a substantial adverse effect, either directly or through habitat modifications, on any species identified as a candidate, sensitive, or special status species in local or regional plans, policies, or regulations, or by the California Department of Fish and Game or U.S. Fish and Wildlife Service? (CEQA IVa)			**X**	
3.4.6-2. Have a substantial adverse effect on any riparian habitat or other sensitive natural community identified in local or regional plans, policies, regulations or by the California Department of Fish and Game or US Fish and Wildlife Service? (CEQA IVb)			**X**	
3.4.6-3. Have a substantial adverse effect on federally protected wetlands (including, but not limited to, marsh, vernal pool, coastal, etc.) through direct removal, filling, hydrological interruption, or other means? (CEQA IVc)				**X**
3.4.6-4. Interfere substantially with the movement of any native resident or migratory fish or wildlife species or with established native resident or migratory wildlife corridors, or impede the use of native wildlife nursery sites? (CEQA IVd)		**X**		
3.4.6-5. Conflict with any local policies or ordinances protecting biological resources, such as tree preservation policy or ordinance? (CEQA IVe)			**X**	

CEQA Environmental Checklist Item	Potentially Significant Impact	Less Than Significant with Mitigation Measures	Less Than Significant Impact	No Impact
3.4.6-6. Conflict with the provisions of an adopted Habitat Conservation Plan, Natural Community Conservation Plan, or other approved local, regional, or state habitat conservation plan? (CEQA IVf)				**X**
TRPA Initial Environmental Checklist Item	**Yes**	**No, With Mitigation**	**Data Insufficient**	**No**
3.4.6-7. Removal of native vegetation in excess of the area utilized for the actual development permitted by the land capability/IPES system? (TRPA 4a)				**X**
3.4.6-8. Removal of riparian vegetation or other vegetation associated with critical wildlife habitat, either through direct removal or indirect lowering of the groundwater table? (TRPA 4b)				**X**
3.4.6-9. Introduction of new vegetation that will require excessive fertilizer or water, or will provide a barrier to the normal replenishment of existing species? (TRPA 4c)				**X**
3.4.6-10. Change in the diversity or distribution of species, or number of any species of plants (including trees, shrubs, grass, crops, micro flora and aquatic plants)? (TRPA 4d)				**X**
3.4.6-11. Reduction of the numbers of any unique, rare or endangered species of plants? (TRPA 4e)				**X**
3.4.6-12. Removal of streambank and/or backshore vegetation, including woody vegetation such as willows? (TRPA 4f)				**X**
3.4.6-13. Removal of any native live, dead or dying trees 30 inches or greater in diameter at breast height (dbh) within TRPA's Conservation or Recreation land use classifications? (TRPA 4g)	**X**			

TRPA Initial Environmental Checklist Item	Yes	No, With Mitigation	Data Insufficient	No
3.4.6-14. A change in the natural functioning of an old growth ecosystem? (TRPA 4h)				**X**
3.4.6-15. Change in the diversity or distribution of species, or numbers of any species of animals (birds, land animals including reptiles, fish and shellfish, benthic organisms, insects, mammals, amphibians or microfauna)? (TRPA 5a)				**X**
3.4.6-16. Reduction of the number of any unique, rare or endangered species of animals? (TRPA 5b)				**X**
3.4.6-17. Introduction of new species of animals into an area, or result in a barrier to the migration or movement of animals? (TRPA 5c)				**X**
3.4.6-18. Deterioration of existing fish or wildlife habitat quantity or quality? (TRPA 5d)				**X**

3.4.6-1. Would the Project have a substantial adverse effect, either directly or through habitat modifications, on any species identified as a candidate, sensitive, or special status species in local or regional plans, policies, or regulations, or by the California Department of Fish and Game or U.S. Fish and Wildlife Service? (CEQA IVa)

The project area does not contain suitable habitat for the species listed in Table 3-7 and 3-8 above. Disturbed areas outside the footprint of the new facilities would be revegetated with a native seed mix as described in the Project description. The Project area does not contain any suitable habitat for sensitive species; therefore, this impact is considered less than significant.

Suitable habitat for Sierra Nevada yellow-legged frog (SNYLF) (USFWS endangered and CDFW threatened) has been identified in the vicinity of Trout Creek and Heavenly Valley Creek that lies to the west and south of the Project area. The project would not result in any modifications to the creek channel or result in any changes to the existing creek channel habitat. The closest known occurrence of this species is in Hell Hole and Desolation Wilderness, seven and eight miles away respectively. This species is not known to occur in, or in close proximity to the Project area. No impacts to this species would occur.

Lahontan cutthroat trout (LCT) is the only special status species (USFWS and CDFW) that has the potential to occur in Trout Creek. In 2010, USFS, Lake Tahoe Basin Management Unit performed a comprehensive survey of Trout Creek. No LCT were observed in the creek at that time. These fish are obligate stream spawners and may be present in Trout Creek as there are no barriers that would prevent them from moving upstream. No impact to LCT would occur as no disturbance to Trout Creek or Heavenly Valley Creek or the riparian area surrounding the creeks is proposed. Best management practices will be implemented during construction activities in order to protect water quality and prevent construction runoff from reaching

the waters of either creek. This may include fencing the construction area, coir logs located along the construction perimeter, and other best management practices.

Monarch butterfly may utilize the riparian area surrounding Trout Creek and Heavenly Valley Creek for foraging due to the presence of flowering plants, but suitable foraging habitat is less present in the project area. The low-level of flowering vegetation removal required for the project is not likely to result in the loss of individual monarch butterflies and will not result in a significant loss of flowering plants that could offer potential nectar sources to this species.

There are no recent records of wolverine sightings from the project area, the vicinity of the project area or the Lake Tahoe Basin. Therefore, no impacts to this species would be anticipated. Additionally, the project area includes no potentially suitable habitat.

Future District projects within the WWTP area would be subject to project-level environmental review and permitting at which time they would be required to demonstrate compliance with all federal, state, and local regulations pertaining to the protection of animal species. Implementation of the proposed Solar Project and THP/TCP would not result in the reduction in the number of any unique, rare, or endangered species of animals, including waterfowl. The project does not propose new development that threaten protection of listed species or their habitat, and do not affect policies that protect biological resources.

Environmental Analysis: *Less than Significant Impact.*

Required Mitigation: **None.**

3.4.6-2. Would the Project have a substantial adverse effect on any riparian habitat or other sensitive natural community identified in local or regional plans, policies, regulations or by the California Department of Fish and Game or US Fish and Wildlife Service? (CEQA IVb)

The U.S. Fish and Wildlife Service's IpaC database identifies no riparian habitat, no wetlands, and no critical habitat in the Project development area. Riparian habitat is located west and south of the Project area along Trout Creek and Heavenly Valley Creek; however, no direct or indirect disturbance to this area is proposed. Runoff generated by the new project would be managed onsite using Best Management Practices. The Solar project development area does not include TRPA land capability district 1b (SEZs). The project would not alter or revise the regulations pertaining to existing fish or wildlife habitat quantity or quality or pertaining to resource protection measures. Future development projects associated with the WWTP and surrounding area on District lands would be subject to subsequent project-level environmental review and permitting at which time they would be required to demonstrate compliance with all federal, state, and TRPA regulations pertaining to the protection of riparian areas.

Environmental Analysis: *Less than Significant Impact.*

Required Mitigation: **None.**

3.4.6-3. Would the Project have a substantial adverse effect on federally protected wetlands (including, but not limited to, marsh, vernal pool, coastal, etc.) through direct removal, filling, hydrological interruption, or other means? (CEQA IVc)

There are no federally protected wetlands within the project area.

Environmental Analysis: *No Impact.*

Required Mitigation: **None**

3.4.6-4. Would the Project interfere substantially with the movement of any native resident or migratory fish or wildlife species or with established native resident or migratory wildlife corridors, or impede the use of native wildlife nursery sites? (CEQA IVd)

No known migration or travel corridors are located within the Project area. Riparian corridors are known to be travel ways for many wildlife species. No removal of riparian areas is proposed in conjunction with the project, therefore no impacts to these travel corridors are expected to occur.

The Solar project would result in the removal of approximately 220 trees greater than 14 inches diameter at breast height (dbh) within the project area. Many of the trees in the forested areas contain structural anomalies such as dead leaders, rotten portions of boles and deformities due to mistletoe or other infectious growths. These characteristics are attractive to many bird species. In addition, older trees often contain deadwood that is suitable for excavation by cavity nesters. Tree removal and construction activities associated with construction of the new buildings/structures associated with expansion may result in direct removal of active nests and may result in disturbance or abandonment of nesting, roosting, or breeding sites in adjacent habitat. To ensure protection of potential nesting birds within conversion areas, mitigation measures are required to reduce the potential impact to less than significant.

Required Mitigation: **BIO-1. Bird Nest Site Protection Program**

If tree removal occurs outside the nesting season (1 February to 31 August) then no survey or monitoring is required.

If tree removal will occur during the nesting season (1 February to 31 August), mitigation shall include surveys, consultation, and protective actions. Pre-construction surveys, occurring during the nesting season (1 February to 31 August) immediately prior to initial project construction (e.g., excavation, grading and tree removal), shall be conducted to identify any active nest sites within the Project tree removal area. Specifically, prior to initial construction activities (tree removal and excavation for construction), a qualified biological monitor shall visit the construction area to evaluate whether any nesting birds are occupying trees or whether any wildlife den/nursery sites are located within the Project tree removal area. If nest sites are identified, the biological monitor will have the authority to stop or reschedule construction activities near occupied trees or nursery sites if continued work could have negative impact on nesting birds or their young. If construction activities must be stopped, the monitor shall consult with TRPA and/or CDFW staff within 24 hours from the discovery to determine appropriate actions to restart construction while reducing impacts to identified bird nests.

Environmental Analysis: *Less than Significant Impact with Mitigation.*

3.4.6-5. Would the Project conflict with any local policies or ordinances protecting biological resources, such as tree preservation policy or ordinance? (CEQA IVe)

The eastern portion of the STPUD WWTP site is located in the 101 Bijou Meadow Plan Area Statement. The land use classification for the 101 Bijou Meadow Plan Area Statement is recreation. The Project area falls under TRPA Code of Ordinances Section 61.1.4.C Tree Removal for Solar Access. This code section allows for removal of trees to maximize efficiency of solar energy systems. A Tree Removal Plan (Timber Harvest Plan) has been prepared by a Registered Professional Forester for the project. The Project does not include the removal of native vegetation in excess of the area to be developed and is the minimum necessary. Therefore, this impact is considered to be less than significant.

Environmental Analysis: *Less than Significant Impact.*

Required Mitigation: **None.**

3.4.6-6. Would the Project conflict with the provisions of an adopted Habitat Conservation Plan, Natural Community Conservation Plan, or other approved local, regional, or state habitat conservation plan? (CEQA IVf)

The proposed project does not conflict with the provisions of an adopted Habitat Conservation Plan, Natural Community Conservation Plan, or other approved local, regional, or state habitat conservation plan because no such plans exist for the project area.

Environmental Analysis: *No Impact.*

Required Mitigation: **None.**

3.4.6-7. Would the Project result in removal of native vegetation in excess of the area utilized for the actual development permitted by the land capability/IPES system? (TRPA 4a)

The Solar Project does not propose to remove native vegetation outside of the proposed facility or improvement construction footprint. Consistent with existing conditions, vegetation surrounding the construction site of solar project facilities would be required to comply with Section 33.6, Vegetation Protection During Construction, of the TRPA Code of Ordinances. Protective requirements include installation of temporary construction fencing, standards for tree removal and tree protection, standards for soil and vegetation protection, and revegetation of disturbed areas.

Environmental Analysis: *No Impact.*

Required Mitigation: **None.**

3.4.6-8. Would the Project result in removal of riparian vegetation other vegetation associated with critical wildlife habitat, either through direct removal or indirect lowering of the groundwater table? (TRPA 4b)

The proposed project would not alter or revise the regulations pertaining to vegetation removal and groundwater management. Additionally, Section 33.3.6 (Excavation Limitations) of the TRPA Code of Ordinances prohibits excavation that intercepts or interferes with groundwater except under specific circumstances and with prior approval by TRPA (Section 33.3.6.A.2). For these reasons, consistent with existing conditions, the Solar Project would not directly or indirectly lower the groundwater table. The solar array construction would not require compaction or direct covering of soils, allowing for continued percolation of rain and snow melt.

Further, vegetation removal would be required to comply with existing TRPA, federal, and state regulations, permitting requirements, and environmental review procedures that protect habitat that supports riparian vegetation and critical wildlife. Specifically, wildlife habitat are protected by Sections 61.1.6 (Management Standards for Tree Removal), and Chapter 62 (Wildlife Resources) of the TRPA Code of Ordinances. There are no riparian areas or critical habitat within the Solar Project area. For these reasons, development associated with the Solar Project is not expected to result in the removal of riparian or other vegetation associated with critical wildlife habitat.

Environmental Analysis: *No Impact.*

Required Mitigation: **None.**

3.4.6-9. Would the Project result in introduction of new vegetation that will require excessive fertilizer or water, or will provide a barrier to the normal replenishment of existing species? (TRPA 4c)

Consistent with existing conditions, implementation of projects associated with the project would be required to comply with the TRPA Code provisions (e.g., Section 61.4, Revegetation) and Goals and Policies that prohibit the release of non-native species in the Tahoe Region. Generally, native species require less fertilizer and water than non-native species, and the District typically retains native vegetation and supplements that vegetation in landscape areas with native or drought tolerant plants. Non-landscaped disturbed areas are hydroseeded with a native seed mix following construction disturbance.

Provisions for fertilizer management and preparation of fertilizer management plans that address the type, quantity, and frequency of use of fertilizers are included in Section 60.1.8 of the TRPA Code. The Solar Project does not require removal of low lying vegetation and as such, no new planting is required within the area of the solar array. Trenches will be revegetated with native seed mixes. All landscape plans, planting plans and restoration plans will comply with TRPA Code of Ordinances, Section 30.6.7 Landscaping Standards and 61.4 Revegetation. As the proposed plans will be developed in accordance with the TRPA Code of Ordinances sections outlined above, the project will not introduce new vegetation that will require excess fertilizer or water, nor will it provide a barrier to the normal replenishment of existing plant species.

Environmental Analysis: *No Impact.*

Required Mitigation: **None.**

3.4.6-10. Would the Project result in change in the diversity or distribution of species, or number of any species of plants (including trees, shrubs, grass, crops, micro flora and aquatic plants)? (TRPA 4d)

See discussion and analyses in Questions 3.4.6-1 through 3.4.6-9. Approximately 220 trees greater than 14 inches dbh would be removed to construct all of the solar array and associated structures. While an increase in coverage and a decrease in vegetation would occur, the change would not change the overall diversity or distribution of species. The area immediately surrounding the solar facility will continue to be forested along with a large majority of the national forest systems lands within the Lake Tahoe Region.

The California Natural Diversity Database (CNDDB) identifies two sensitive natural communities within the USGS 7.5 min Quad Map search area that were queried. Grass Lake and Osgood Swamp were both identified by CNDDB as sphagnum bogs. The Project will not result in any impacts to either the Grass Lake or Osgood Swamp sphagnum bogs as the sensitive communities are 7 and 9.5 miles away respectively from the project area.

Environmental Analysis: *No Impact.*

Required Mitigation: **None.**

3.4.6-11. Would the Project result in reduction of the numbers of any unique, rare or endangered species of plants? (TRPA 4e)

See discussion and analysis for Question 3.4.6-1 above. No unique, rare, or endangered species of plants are known to occur within the Solar project area.

The proposed development area does not contain suitable habitat for the species listed in Table 3-8 above. A few invasive species were observed during the survey: bull thistle, cheat grass, and dandelion. The potential for the spread of invasive species during project construction increases with disturbance. While the minor spread of invasive species may result due to project development, the project area does not contain any suitable habitat for sensitive species; therefore, no significant impact would occur.

Environmental Analysis: *No Impact.*

Required Mitigation: **None**

3.4.6-12. Would the Project result in removal of streambank and/or backshore vegetation, including woody vegetation such as willows? (TRPA 4f)

The proposed project would not result in development of the area near Trout Creek or Heavenly Valley Creek and would not alter streambank or backshore vegetation. See discussion and analysis for Question 3.4.6-8 above.

Environmental Analysis: *No Impact*.

Required Mitigation: **None.**

3.4.6-13. Would the Project result in removal of any native live, dead or dying trees 30 inches or greater in diameter at breast height (dbh) within TRPA's Conservation or Recreation land use classifications? (TRPA 4g)

See discussion and analysis for Question 3.4.6-5 above. Though the project will require removal of trees greater than 30 inches dbh, the tree removal is permitted per TRPA Code Section 61.1.4.C Tree Removal for Solar Access, and as such, does not have significant impact on the environment.

Environmental Analysis: Yes; *No Impact.*

Required Mitigation: **None**

3.4.6-14. Would the Project result in a change in the natural functioning of an old growth ecosystem? (TRPA 4h)

No old growth ecosystem exists within or adjacent to the project area and therefore no impact will occur.

Environmental Analysis: *No Impact.*

Required Mitigation: **None.**

3.4.6-15. Would the Project result in change in the diversity or distribution of species, or numbers of any species of animals (birds, land animals including reptiles, fish and shellfish, benthic organisms, insects, mammals, amphibians or microfauna)? (TRPA 5a)

The proposed project would not alter the regulations pertaining to the protection of animal species. The resource management provisions contained in Chapters 60 through 68 of the TRPA Code are still applicable.

As discussed above in Questions 3.4.6-1 through -5, the project is not located immediately adjacent to Trout Creek or Heavenly Valley Creek and would not affect the diversity or distribution of species or numbers of

species. The protection of nesting raptor and migratory bird species under mitigation measure BIO-1 would also ensure the diversity and distribution of species and individuals is maintained.

Environmental Analysis: *No, with Mitigation.*

Required Mitigation: **BIO-1. Bird Nest Site Protection Program**

3.4.6-16. Would the Project result in reduction of the number of any unique, rare or endangered species of animals? (TRPA 5b)

See discussion and analyses for Question 3.4.6-1. The proposed project would not alter or revise the regulations pertaining to unique rare or endangered species of animals and the natural resource provisions of Chapters 61 and 62 of the TRPA Code remain applicable. No unique, rare, or endangered species would be affected by implementation of the project.

Environmental Analysis: *No Impact.*

Required Mitigation: **None.**

3.4.6-17. Would the Project result in introduction of new species of animals into an area, or result in a barrier to the migration or movement of animals? (TRPA 5c)

See discussion and analysis for Question 3.4.6-4 above.

Environmental Analysis: *No, with Mitigation.*

Required Mitigation: **BIO-1. Bird Nest Site Protection Program**

3.4.6-18. Would the Project result in deterioration of existing fish or wildlife habitat quantity or quality? (TRPA 5d)

The proposed project would not alter or revise the regulations pertaining to existing fish or wildlife habitat quantity or quality.

Environmental Analysis: *No Impact*.

Required Mitigation: **None.**

3.4.7 Cultural Resources (CEQA) and Archaeological/Historical (TRPA)

This section presents the analyses for potential impacts to cultural, archaeological and historical resources, discussing the Project impacts on cultural resources related to the disturbance of archaeological, historical, architectural, and Native American/traditional heritage resources. The section also addresses disturbance of unknown archaeological resources, as well as paleontological resources (fossils). Table 3-9 identifies the applicable impacts, anticipated level of impact, and whether mitigation measures are required to reduce impacts to a less than significant level.

Environmental Setting:

Cultural Resource field studies were conducted in July 2022 for the STPUD Solar Project, along with tribal consultation with the Washoe Tribe under California AB 52 in April 2023. The Cultural Resource Study identified one historical resource near the project area. The Washoe Tribe have not identified any cultural resource within the APE. No new sites were identified during onsite surveys of the STPUD Solar Project property.

CA-ELD-1379H [FS 05-19-90, P-9-1917]: This site is the roadbed of the G.W. Chubback/Lake Valley Railroad. The portion of this RR grade near the Lake Tahoe Community College (LTCC) campus runs in a north/south direction from approximately the middle of the STPUD WWTP north toward the college campus beneath the soccer field and up through College Drive into Bijou Community Park. The railroad grade varies from a cut through the landscape to a raised grade embankment or berm. Upon entering the WWTP from the LTCC campus, it is near and at natural ground level. The ties and rails have been removed from the railroad grade. The grade is virtually indistinct within the LTCC campus and WWTP boundaries. About 0.3 miles (or 75%) of this segment have been lightly impacted, but the grade and morphology remain intact. About 0.1 miles (or 25%) have been heavily impacted or obliterated by new road construction (Lindstrom 1998:222). The Lake Valley Railroad was determined ineligible for the National Register through a Section 106 process in 1998. Railroad integrity has not been maintained as the rails and other features have been salvaged, reused and removed.

Table 3-9: Cultural Resources and Archaeological/Historical

CEQA Environmental Checklist Item	Potentially Significant Impact	Less Than Significant with Mitigation Measures	Less Than Significant Impact	No Impact
3.4.7-1. Cause a substantial adverse change in the significance of a historical resource as defined in §15064.5? (CEQA Va)				**X**
3.4.7-2. Cause a substantial adverse change in the significance of an archaeological resource pursuant to §15064.5? (CEQA Vb)				**X**
3.4.7-3. Disturb any human remains, including those interred outside of formal cemeteries? (CEQA Vc)				**X**

TRPA Initial Environmental Checklist Item	Yes	No, With Mitigation	Data Insufficient	No
3.4.7-4. Will the proposal result in an alteration of or adverse physical or aesthetic effect to a significant archaeological or historical site, structure, object or building? (TRPA 20a)				**X**
3.4.7-5. Is the proposed project located on a property with any known cultural, historical, and/or archaeological resources, including resources on TRPA or other regulatory official maps or records? (TRPA 20b)				**X**
3.4.7-6. Is the property associated with any historically significant events and/or sites or persons? (TRPA 20c)				**X**

3.4.7-1. Would the Project cause a substantial adverse change in the significance of a historical resource as defined in §15064.5? (CEQA Va)

As discussed above in the Environmental Setting, previously recorded resources near the STPUD Solar Project property include site CA-ELD-1379H/P-9-1917. The railroad grade has been removed within the STPUD WWTP property and terminates at the northern boundary of the STPUD property boundary. There is no evidence of the RR grade within the STPUD Solar Project area.

Environmental Analysis: *No Impact*.

Required Mitigation: **None.**

3.4.7-2. Would the Project cause a substantial adverse change in the significance of an archaeological resource pursuant to §15064.5? (CEQA Vb)

See discussion and analysis for Question 3.4.7-1 above. No archaeological resources have been identified within the STPUD Solar Project area.

Environmental Analysis: *No Impact*.

Required Mitigation: **None.**

3.4.7-3. Would the Project disturb any human remains, including those interred outside of formal cemeteries? (CEQA Vc)

Due to the relatively flat cross slopes on the WWTP property in the area of the proposed Solar Project, most construction of the solar field and access roadway would not require excavation in excess of five feet. With construction excavation of five feet in depth or less, the potential to uncover human remains is low. Likewise, felling of trees under the TCP/THP is associated with little to no potential to uncover human remains.

Existing regulations outlined in Section 7050.5(b) of the California Health and Safety Code and Section 5097.98 of the State Public Resources Code specify protocol when human remains are discovered. If human remains are discovered, the Codes require work to cease within the immediate area and notification of the County Coroner. If the remains are determined to be Native American, the coroner will notify the Native American Heritage Commission, and the procedures outlined in CEQA Section 15064.5(d) and (e) shall be followed. The City's General Plan Policy NCR-4.5 requires notification of the City if human remains are discovered during ground disturbing activities.

Environmental Analysis: *Less than Significant Impact.*

Required Mitigation: **None.**

3.4.7-4. Will the Project result in an alteration of or adverse physical or aesthetic effect to a significant archaeological or historical site, structure, object or building? (TRPA 20a)

See discussions and analyses discussions for Questions 3.4.7-1 through 3.4.7-2 above.

Environmental Analysis: *No.*

Required Mitigation: **None.**

3.4.7-5. Is the Project located on a property with any known cultural, historical, and/or archaeological resources, including resources on TRPA or other regulatory official maps or records? (TRPA 20b)

See discussion in Questions 3.4.7-1 and 3.4.7-2 above regarding the mapped resources.

Environmental Analysis: *No.*

Required Mitigation: **None.**

3.4.7-6. Is the Project associated with any historically significant events and/or sites or persons? (TRPA 20c)

See discussions and analyses discussions for Questions 3.4.7-1 through 3.4.7-2 above.

Environmental Analysis: *No.*

Required Mitigation: **None.**

3.4.8 Energy (CEQA/TRPA)

This section presents the analyses for potential impacts to energy. Table 3-10 identifies the applicable impacts, anticipated level of impact, and whether mitigation measures are required to reduce impacts to a less than significant level.

Environmental Setting:

The STPUD WWTP is currently served by Southwest Gas (natural gas) and Liberty Utilities (electricity). Natural gas is used for heating, with electricity used to power most WWTP facilities including administrative buildings, treatment plant motors up to 1000 horsepower, telemetry systems, programmable logic controllers, and field automation systems. In addition to gas and electrical consumption, the plant also maintains an emergency pumping station and diesel generator to maintain the plant operational during electrical outages from Liberty Utilities. The WWTP needs to operate 24/7 to ensure that there are no discharges of untreated wastewater to surface waters.

Table 3-10: Energy

CEQA Environmental Checklist Item	Potentially Significant Impact	Less Than Significant with Mitigation Measures	Less Than Significant Impact	No Impact
3.4.8-1. Result in potentially significant environmental impact due to wasteful, inefficient, or unnecessary consumption of energy resources, during project construction or operation? (CEQA VIa)				X
3.4.8-2. Conflict with or obstruct a state or local plan for renewable energy or energy efficiency? (CEQA VIb)				X
TRPA Initial Environmental Checklist Item	**Yes**	**No, With Mitigation**	**Data Insufficient**	**No**
3.4.8-3. Use of substantial amounts of fuel or energy? (TRPA 15a)				X
3.4.8-4. Substantial increase in demand upon existing sources of energy, or require the development of new sources of energy? (TRPA 15b)				X

3.4.8-1. Would the Project result in potentially significant environmental impact due to wasteful, inefficient, or unnecessary consumption of energy resources, during project construction or operation? (CEQA VIa)

The 1339 kW ground mounted solar facility will be built on the east side of the WWTP and will offset approximately one-third of the energy demands at the WWTP beginning in 2024. Wasteful energy consumption would not occur as a result of the Solar facility operations as it has been designed to generate clean energy. Likewise fuels and electricity would be used during construction of the solar facilities; however, equipment would not be left idling or plugged in when not in active use. Construction would not require quantities of energy resources beyond those of typical public service facility construction and a substantial depletion or wasteful use of energy resources during construction or operation would not occur.

Removal of trees under the TCP/THP would not result in significant impacts related to wasteful or inefficient consumption of energy resources. While equipment used to cut down and remove the trees would require fuels and energy to operate, excessive or wasteful quantities of energy is not proposed. Tree removal would be limited to those trees within the solar array boundary.

Environmental Analysis: *No Impact.*

Required Mitigation: **None.**

3.4.8-2. Would the Project conflict with or obstruct a state or local plan for renewable energy or energy efficiency? (CEQA VIb)

The City of South Lake Tahoe has committed to a goal of 100 percent renewable energy by 2032 and is working with the local electricity provider to reach that goal and invest in greater renewable energy sources. The STPUD Solar Project helps achieve this goal.

Environmental Analysis: *No Impact.*

Required Mitigation: **None**.

3.4.8-3. Would the Project use substantial amounts of fuel or energy? (TRPA 15a)

Consumption of fuel for the off-road equipment used in construction of the Solar Project facilities would be temporary. Operation of the Project would reduce the amount of energy currently used for operation of the WWTP. Substantial fuel consumption would not occur.

Environmental Analysis: *No Impact.*

Required Mitigation: **None.**

3.4.8-4. Will the Project substantially increase the demand upon existing sources of energy, or require the development of new sources of energy? (TRPA 15b)

See discussion in Question 3.4.8-3 above. The Project creates a new source of clean energy and reduces energy demand on the existing electrical grid.

Environmental Analysis: *No Impact*.

Required Mitigation: **None.**

3.4.9 Geology and Soils (CEQA) and Land (TRPA)

This section presents the analyses for potential impacts to geology, soils and land. Table 3-11 identifies the applicable impacts, anticipated level of impact, and whether mitigation measures are required to reduce impacts to a less than significant level.

Environmental Setting:

The most significant geologic hazards associated with the Project area are from seismic activity and the associated effects. These hazards include surface fault rupture, ground shaking, liquefaction, subsidence, landslides, and seiche potential. The nearest Alquist-Priolo Earthquake Fault Zone is located 6.6 miles to the east and there are no known faults within the Project area; therefore, damage to structures in the Project area from fault rupture is unlikely (CA Geological Survey). According to the California Building Code (CBC), the Project area is located in Seismic Zone D, a region of relatively high seismicity, and has the potential to experience strong ground shaking from earthquakes. As such, all structures must be designed to meet the regulations and standards associated with Zone D hazards as set forth in the CBC. The Project area is relatively level therefore landslides are not a threat to facility structures. The Project area is 1.4 miles inland from the lake shore and 60 feet higher in elevation; impact from a seiche is unlikely. Older, well-consolidated, well-graded soils and the lack of shallow groundwater make failure from liquefaction unlikely, but under the right hydrologic conditions, this unit might be susceptible to liquefaction during seismic events.

Though no excavation is proposed that would exceed 5 feet of depth, a geotechnical investigation completed north of the Project Area (LTCC campus) in 2015 included four borings each 16.5 feet deep (BSK 2015). The borings did not indicate the presence of groundwater. Another geotechnical investigation specifically for the LTCC Early Learning Center, located at the north end of the LTCC campus, was conducted in 2019. This investigation found groundwater at a depth of 30 feet below ground surface. It is likely that similar conditions are present elsewhere on the LTCC campus, and also likely similar to the south in the Project Area.

Existing and proposed land coverage is referenced in Section 2 – Project Description. The STPUD WWTP property is within land capability districts 1b, 4, and 6. Proposed coverage is only included within land capability districts 4 and 6.

Table 3-11: Geology and Soils and Land

CEQA Environmental Checklist Item	Potentially Significant Impact	Less Than Significant with Mitigation Measures	Less Than Significant Impact	No Impact
3.4.9-1. Directly or indirectly cause potential substantial adverse effects, including the risk of loss, injury, or death involving: i) Rupture of a known earthquake fault, as delineated on the most recent Alquist-Priolo Earthquake Fault Zoning Map issued by the State Geologist for the area or based on other substantial				X

evidence of a known fault? Refer to Division of Mines and Geology Special Publication 42? ii) Strong seismic ground shaking? iii) Seismic-related ground failure, including liquefaction? iv) Landslides? (CEQA VIIa)				
3.4.9-2. Result in substantial soil erosion or the loss of topsoil? (CEQA VIIb)			**X**	
3.4.9-3. Be located on a geologic unit or soil that is unstable, or that would become unstable as a result of the project, and potentially result in on- or off-site landslide, lateral spreading, subsidence, liquefaction or collapse? (CEQA VIIc)				**X**
3.4.9-4. Be located on expansive soil, as defined in Table 18-1-B of the Uniform Building Code (1994), creating substantial risks to life or property? (CEQA VIId)				**X**
3.4.9-5. Have soils incapable of adequately supporting the use of septic tanks or alternative waste water disposal systems where sewers are not available for the disposal of waste water? (CEQA VIIe)				**X**
3.4.9-6. Directly or indirectly destroy a unique paleontological resource or site or unique geologic feature? (CEQA VIIf)				**X**
TRPA Initial Environmental Checklist Item	**Yes**	**No, With Mitigation**	**Data Insufficient**	**No**
3.4.9-7. Compaction or covering of the soil beyond the limits allowed in the land capability or Individual Parcel Evaluation System (IPES)? (TRPA 1a)				**X**
3.4.9-8. A change in the topography or ground surface relief features of site inconsistent with the natural surrounding conditions? (TRPA 1b)				**X**
3.4.9-9. Unstable soil conditions during or after completion of the proposal? (TRPA 1c)				**X**

3.4.9-10. Changes in the undisturbed soil or native geologic substructures or grading in excess of 5 feet? (TRPA 1d)				**X**
3.4.9-11. The continuation of or increase in wind or water erosion of soils, either on or off the site? (TRPA 1e)				**X**
3.4.9-12. Changes in deposition or erosion of beach sand, or changes in siltation, deposition or erosion, including natural littoral processes, which may modify the channel of a river or stream or the bed of a lake? (TRPA 1f)				**X**
3.4.9-13. Exposure of people or property to geologic hazards such as earthquakes, landslides, backshore erosion, avalanches, mud slides, ground failure, or similar hazards? (TRPA 1g)				**X**

3.4.9-1. Would the Project expose people or structures to potential substantial adverse effects, including the risk of loss, injury, or death involving:

3.4.9-1.i) Rupture of a known earthquake fault, as delineated on the most recent Alquist-Priolo Earthquake Fault Zoning Map issued by the State Geologist for the area or based on other substantial evidence of a known fault? Refer to Division of Mines and Geology Special Publication 42? (CEQA VIIa).

3.4.9-1.ii) Strong seismic ground shaking?

3.4.9-1.iii) Seismic-related ground failure, including liquefaction?

3.4.9-1.iv) Landslides?

The STPUD WWTP is located within the Sierra Nevada-Great Basin seismic belt. Based on the Division of Mines and Geology Special Publication 42 and the Index to Official Maps of Earthquake Fault Zones (Hart and Bryant 1997), the WWTP is not located in the Alquist-Priolo Earthquake Fault Zone. The closest Alquist-Priolo Earthquake Fault Zone is the Genoa fault located southeast of the area and outside the Tahoe Basin.

Development of the Solar project would not expose people or structures to adverse geological hazards because the WWTP is not located within an Alquist-Priolo fault zone, nor are any active or inactive faults identified at the site (CA Geological Survey, 2005) and therefore risks associated with fault rupture are considered low. In addition, the Project does not include any new structures or buildings that would be occupied by personnel.

Environmental Analysis: *No Impact.*

Required Mitigation: **None.**

3.4.9-2. Would the Project result in substantial soil erosion or the loss of topsoil? (CEQA VIIb)

The Project area is relatively flat; therefore, substantial grading or significant change in topography would not occur for construction of the Solar facilities. The largest component of the Project, the solar arrays, will use ground screws that do not require grading or placement of fill material. Excavation would not exceed five feet or intercept groundwater, which is located far deeper than five feet on the WWTP property; therefore, new facilities would not interfere or intercept the seasonal-high groundwater level.

Construction of the Project will include minimal grading for the access roadway and trenching to connect the solar facility with the existing electrical grid. Mandatory erosion control measures in areas of new construction would be installed prior to ground disturbance. Entrance to the construction area include rock lined entryways to ensure construction vehicles do not cause soils to erode or track out.

Under the TCP/THP, trees would be cut down and removed from the Project area using mechanical equipment. Tree removal would only occur in conjunction with the Solar project and would be selective to the facility footprint.

Environmental Analysis: *Less than Significant Impact.*

Required Mitigation: **None**.

3.4.9-3. Would the Project be located on a geologic unit or soil that is unstable, or that would become unstable as a result of the Project, and potentially result in on- or off-site landslide, lateral spreading, subsidence, liquefaction or collapse? (CEQA VIIc)

See discussions and analyses for Questions 3.4.9-1.i through 3.4.9-1.iv above. No significant soil instability or hazard associated with unstable soils would occur.

Environmental Analysis*: No Impact*.

Required Mitigation: **None**.

3.4.9-4. Would the Project be located on expansive soil, as defined in Table 18-1-B of the Uniform Building Code (1994), creating substantial risks to life or property? (CEQA VIId)

According to the Swelling Clays Map of The Coterminous United States, the Tahoe Basin Region falls within an area that is underlain with little to no clays with swelling potential (USGS 1989). The native soils in the Lake Tahoe Basin and WWTP area are considered well-consolidated and are not prone to collapse. Frost heave is most common in silty soils and clays (Zhang 2013). The soil in the Project area is loamy coarse sand and gravelly loamy coarse sand making it less susceptible to movement from frost heave. The local soils are not considered corrosive or expansive and therefore corrosion impacts to concrete structures would not occur to newly constructed equipment pads.

Tree removal under the TCP/THP would not affect or be affected by soils or cause a risk to life and property in relation to soils.

Environmental Analysis: *No Impact.*

Required Mitigation: **None**.

3.4.9-5. Would the Project have soils incapable of adequately supporting the use of septic tanks or alternative wastewater disposal systems where sewers are not available for the disposal of wastewater? (CEQA VIIe)

The Solar Project does not include any changes to wastewater generation or treatment.

Environmental Analysis: *No Impact.*

Required Mitigation: **None.**

3.4.9-6. Would the Project directly or indirectly destroy a unique paleontological resource or site or unique geologic feature? (CEQA VIIf)

There is little to no potential that unknown paleontological resources may be located in the area and would be uncovered by development of the Solar facilities since minimal excavation is proposed for the access road and electrical trenching. Paleontological remains are found in sedimentary rock formations. El Dorado County's geology is predominantly igneous (volcanic) in nature, and the type of sedimentary deposits where such remains might be present, are virtually nonexistent (GP DEIR, page 5.13-1).

Environmental Analysis: *No Impact.*

Required Mitigation: **None**.

3.4.9-7. Would the Project result in compaction or covering of the soil beyond the limits allowed in the land capability or Individual Parcel Evaluation System (IPES)? (TRPA 1a)

A map of the land capability districts is provided below in Figure 3.4.9-1. The Solar Project includes new facilities that would add land coverage to the WWTP project area, specifically within land capability districts 4 and 6. The plan sheets in Appendix A shows existing land coverage on the WWTP, allowed land coverage, and proposed land coverage within each land capability district (1b, 4, and 6). No new land coverage would be located in Class 1b (SEZ) lands, a portion of the trench required to connect the solar array to the WWTP electrical service drop would be located within Class 1b lands, but within existing disturbance or under existing land coverage. No new land coverage would be created for the electrical trenching. Total existing land coverage on the WWTP is 682,468 square feet, while total allowed base land coverage is 1,054,939 square feet. The Solar project proposes an additional 52,001 square feet of land coverage primarily for the solar arrays, totaling 734,469 square feet of land coverage following Solar facility buildout. The land coverage assigned to the solar arrays is reduced based on their height off the ground, utilizing the overhang coverage allowance reduction. Although total proposed land coverage in land capability district 6 would exceed allowable land coverage limits by approximately 73,400 square feet, the total proposed land coverage on the WWTP would be well below the base allowable land coverage limit when including base allowable land coverage within land capability district 4. Therefore, no mitigation measures are required for excess land coverage within land capability district 6. To offset past land coverage in Class 1b lands that exceeds allowable limits, the Solar Project will pay excess land coverage mitigation fees based on formulas in the TRPA Code.

Environmental Analysis: *No Impact.*

Required Mitigation: **None.**

3.4.9-8. Will the Project result in a change in the topography or ground surface relief features of site inconsistent with the natural surrounding conditions? (TRPA 1b)

See discussions and analyses for Questions 3.4.9-2. No significant change to topography or ground surface features would occur.

Environmental Analysis: *No Impact*.

Required Mitigation: **None.**

3.4.9-9. Will the Project result in unstable soil conditions during or after completion of the proposal? (TRPA 1c)

See discussions and analyses for Questions 3.4.9-1.i through 3.4.9-1.iv above. No significant soil instability or hazard associated with unstable soils would occur.

Environmental Analysis: *No Impact*.

Required Mitigation: **None.**

3.4.9-10. Will the Project result in changes in the undisturbed soil or native geologic substructures or grading in excess of 5 feet? (TRPA 1d)

See discussion and analysis for Question 3.4.9-2.

Environmental Analysis: *No Impact.*

Required Mitigation: **None**.

3.4.9-11. Will the Project result in the continuation of or increase in wind or water erosion of soils, either on or off the site? (TRPA 1e)

See discussion and analysis for Question 3.4.9-2.

Environmental Analysis: *No Impact.*

Required Mitigation: **None**.

3.4.9-12. Will the Project result in changes in deposition or erosion of beach sand, or changes in siltation, deposition or erosion, including natural littoral processes, which may modify the channel of a river or stream or the bed of a lake? (TRPA 1f)

The Solar Project area is not within a beach or lake, and does not affect the riparian area associated with Heavenly Valley Creek to south of the WWTP.

Environmental Analysis: *No Impact.*

Required Mitigation: **None**.

3.4.9-13. Will the Project result in exposure of people or property to geologic hazards such as earthquakes, landslides, backshore erosion, avalanches, mudslides, ground failure, or similar hazards? (TRPA 1g)

See discussions and analyses for Questions 3.4.9-1.i through 3.4.9-1.iv above. No significant soil instability or hazard associated with unstable soils would occur.

Environmental Analysis: *No Impact.*

Required Mitigation: **None.**

Figure 3.4.9-1. STPUD WWTP Property Land Capability District Boundaries

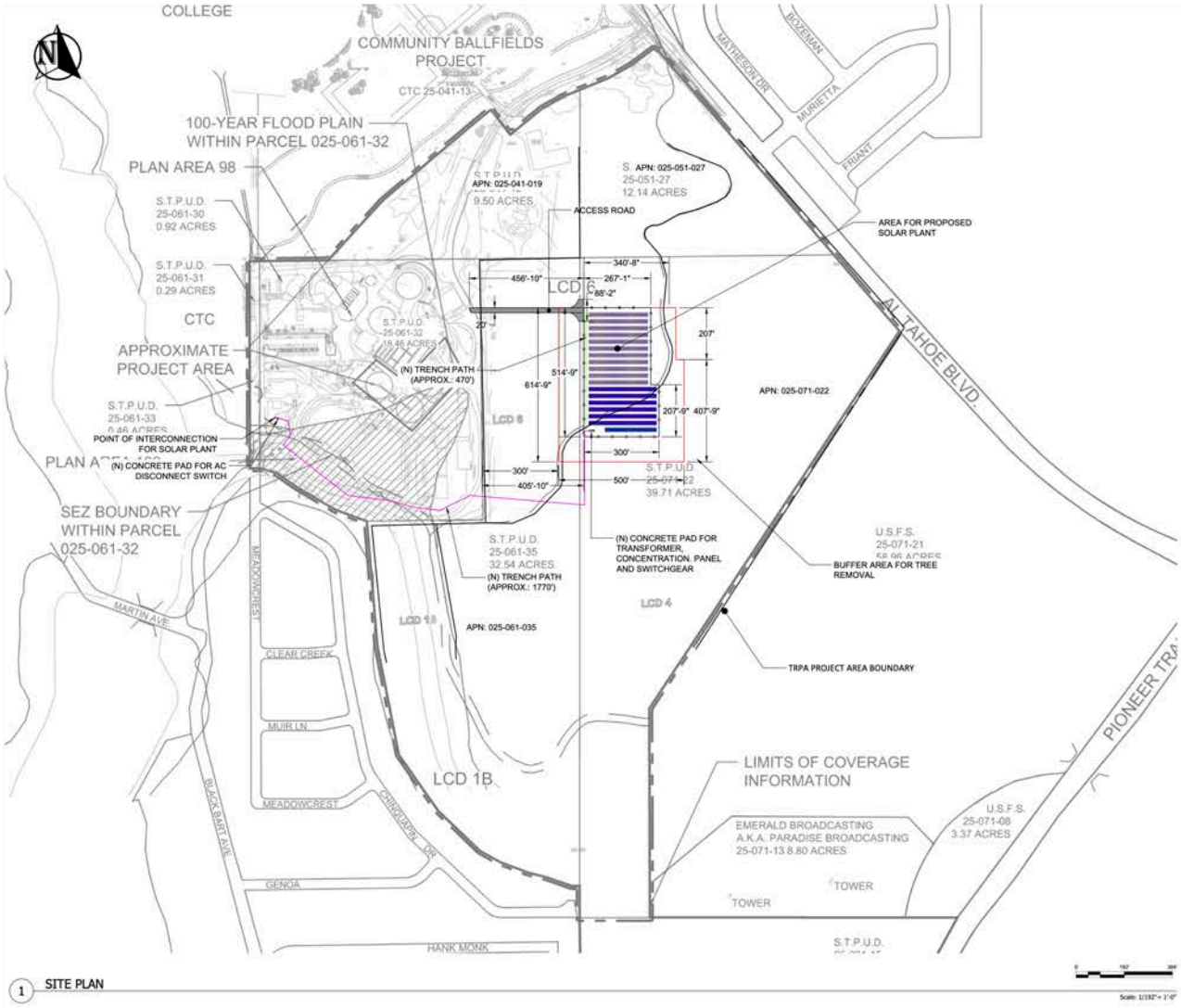

3.4.10 Greenhouse Gas Emissions (CEQA) and Air Quality (TRPA)

This section presents the analyses for potential impacts to greenhouse gas (GHG) emissions. Table 3-12 identifies the applicable impacts, anticipated level of impact, and whether mitigation measures are required to reduce impacts to a less than significant level.

Environmental Setting:

GHGs are a set of compounds in the atmosphere that absorb more of the outgoing long-wave radiation from the surface of the earth than incoming short-wave solar radiation. Therefore, GHGs in the atmosphere affect the global energy balance of the atmosphere-ocean-land system, and thereby affect climate. California regulated GHGs are carbon dioxide (CO2), methane (CH4), nitrous oxide (N2O), sulfur hexafluoride (SF6), hydrofluorocarbons (HFCs), and perfluorocarbons (PFCs). Other GHGs, such as water vapor, are not regulated.

Table 3-12: Greenhouse Gas Emissions and Air Quality

CEQA Environmental Checklist Item	Potentially Significant Impact	Less Than Significant with Mitigation Measures	Less Than Significant Impact	No Impact
3.4.10-1. Greenhouse gas emissions, either directly or indirectly, that may have a significant impact on the environment? (CEQA VIIIa)				X
3.4.10-2. Conflict with an applicable plan, policy or regulation adopted for the purpose of reducing the emissions of greenhouse gases? (CEQA VIIIb)				X
TRPA Initial Environmental Checklist Item	**Yes**	**No, With Mitigation**	**Data Insufficient**	**No**
3.4.10-3. Alteration of air movement, moisture or temperature, or any change in climate, either locally or regionally? (TRPA 2d)				X
3.4.10-4. Increased use of diesel fuel? (TRPA 2e)				X

3.4.10-1. Would the Project generate greenhouse gas emissions, either directly or indirectly, that may have a significant impact on the environment? (CEQA VIIIa)

The Solar Project does not increase operational emission levels at the STPUD WWTP. The Solar Project provides a new green energy source that would help the District offset existing demands on the electricity grid by approximately one-third. As such, the Solar Project reduces greenhouse gas emissions.

Environmental Analysis*: No Impact.*

Required Mitigation: **None.**

3.4.10-2. Would the Project conflict with an applicable plan, policy or regulation adopted for the purpose of reducing the emissions of greenhouse gases? (CEQA VIIIb)

An increase in greenhouse gas emissions would be considered significant if the project would obstruct implementation of any applicable plan, policy, or regulation (e.g., TRPA RTP/SCS, TRPA RPU, City General Plan) of an agency adopted for the purpose of reducing GHG emissions. The project helps achieve GHG emissions reductions.

Environmental Analysis*: No Impact.*

Required Mitigation: **None.**

3.4.10-3. Would the Project result in alteration of air movement, moisture or temperature, or any change in climate, either locally or regionally? (TRPA 2d)

See discussions and analyses for Question 3.4.10-1.

Environmental Analysis*: No Impact.*

Required Mitigation: **None.**

3.4.10-4. Would the Project result in increased use of diesel fuel? (TRPA 2e)

Construction associated with Solar facility development would require the use of diesel fuel for the operation of construction equipment. From an air quality perspective, one of the primary concerns related to diesel fuel consumption is the resultant exposure of sensitive receptors to emissions of toxic air contaminants (TACs) that can occur during both the construction and operational phases of a project. The Solar Project would not include the construction or operation of any major sources of TAC emissions such as power-generating plants or other heavy industrial uses.

Environmental Analysis: *No Impact*.

Required Mitigation: **None.**

3.4.11 Hazards and Hazardous Materials (CEQA) and Risk of Upset and Human Health (TRPA)

This section presents the analyses for potential impacts to hazards and hazardous materials and risk of upset and human health. Table 3-13 identifies the applicable impacts, anticipated level of impact, and whether mitigation measures are required to reduce impacts to a less than significant level.

Environmental Setting

The WWTP is approximately 1.25 miles from the southeastern shore of Lake Tahoe. The property was originally used as grazing land in the late 1800's prior to being developed into the City's wastewater treatment plant, beginning in the 1950s. The elevation of the property is approximately 6,270 feet above mean sea level. The WWTP property is located between Trout Creek/Heavenly Valley Creek and Al Tahoe Boulevard and between U.S. 50 and Pioneer Trail. Nearby land uses include the LTCC facilities immediately north of the WWTP, Bijou Community Park and a residential neighborhood to the east, a residential neighborhood to the west, and open space to the south.

A review of Envirostor and Geotracker (2023) databases reveal no existing hazardous cleanup sites on the STPUD WWTP property. There was one previous site at the WWTP and a number of historic sites surrounding the WWTP that have been remediated and the cases closed, primarily underground storage tanks at the STPUD facilities, the LTUSD property related to the school bus depot, at the South Lake Tahoe Police Department, at the STPUD pump station north of the LTCC campus, at a number of auto shops and gas stations along U.S. 50.

The STPUD WWTP property is mapped in a Local Responsibility Area (LRA) within a "Very High Fire Hazard Severity Zone" (CalFire). The District is mapped by CalFire within a LRA with the South Lake Tahoe Fire Department providing fire protection services to the WWTP. The WWTP is also protected by the Tahoe Basin Multi Agency Coordination Group (MAC) where other fire protection districts in the area can assist in situations where additional resources are required for an emergency, including the El Dorado County Fire Protection District, and Lake Valley Fire Protection District. Both Cal Fire and/or USFS would provide Fire Protection Services in the event of a wildfire near the WWTP.

Table 3-13: Hazards and Hazardous Materials and Risk of Upset and Human Health

CEQA Environmental Checklist Item	Potentially Significant Impact	Less Than Significant with Mitigation Measures	Less Than Significant Impact	No Impact
3.4.11-1. Create a significant hazard to the public or the environment through the routine transport, use, or disposal of hazardous materials? (CEQA IXa)			X	
3.4.11-2. Create a significant hazard to the public or the environment through reasonably foreseeable upset and accident conditions involving the release of hazardous materials into the environment? (CEQA IXb)			X	

3.4.11-3. Emit hazardous emissions or handle hazardous or acutely hazardous materials, substances, or waste within one-quarter mile of an existing or proposed school? (CEQA IXc)			**X**	
3.4.11-4. Be located on a site which is included on a list of hazardous materials sites compiled pursuant to Government Code Section 65962.5 and, as a result, would it create a significant hazard to the public or the environment? (CEQA IXd)				**X**
3.4.11-5. For a Project located within an airport land use plan or, where such a plan has not been adopted, within two miles of a public airport or public use airport, would the project result in a safety hazard or excessive noise for people residing or working in the project area? (CEQA IXe)			**X**	
3.4.11-6. Impair implementation of or physically interfere with an adopted emergency response plan or emergency evacuation plan? (CEQA VIIIf)				**X**
3.4.11-7. Expose people or structures, either directly or indirectly, to a significant risk of loss, injury or death involving wildland fires? (CEQA IXg)			**X**	
TRPA Initial Environmental Checklist Item	**Yes**	**No, With Mitigation**	**Data Insufficient**	**No**
3.4.11-8. Involve a risk of an explosion or the release of hazardous substances including, but not limited to, oil, pesticides, chemicals, or radiation in the event of an accident or upset conditions? (TRPA 10a)				**X**
3.4.11-9. Involve possible interference with an emergency evacuation plan? (TRPA 10b)				**X**
3.4.11-10. Creation of any health hazard or potential health hazard (excluding mental health)? (TRPA 17a)				**X**

3.4.11-11. Exposure of people to potential health hazards? (TRPA 17b)				**X**

3.4.11-1. Would the Project create a significant hazard to the public or the environment through the routine transport, use, or disposal of hazardous materials? (CEQA IXa)

Hazardous materials would not be routinely transported, used, or disposed for the Solar Project. These materials are currently used at the WWTP and the addition of the solar facility would not increase the frequency of use or alter materials handling procedures.

Tree removal would not involve the routine transport, use or disposal of hazardous materials. Trees would be cut down and removed from the WWTP property for local processing or potential reuse at the WWTP property in landscaped areas and as natural fencing. As with any construction activity, the use of motorized machinery requires fuels and oils for operation. The District's Spill Containment Plan would be implemented in relation to tree removal to ensure materials are properly handled and stored.

Environmental Analysis: *Less than Significant Impact.*

Required Mitigation: **None**.

3.4.11-2. Would the Project create a significant hazard to the public or the environment through reasonably foreseeable upset and accident conditions involving the release of hazardous materials into the environment? (CEQA IXb)

Please refer to Question 3.4.11-1 above. Temporary construction activities would require the use of machinery and equipment that use fuels or oil. The solar facility would use common hazardous materials used to operate and maintain WWTP equipment and machinery or to maintain WWTP facilities such as small quantities of paints or cleansers. These materials would be stored in existing WWTP facilities, secured within indoor storage areas. The District's Spill Containment Plan would continue to be implemented to ensure accidental spills are immediately contained and treated in accordance with federal, state, and local standards and policies.

Environmental Analysis: *Less than Significant Impact.*

Required Mitigation: **None**.

3.4.11-3. Would the Project emit hazardous emissions or handle hazardous or acutely hazardous materials, substances, or waste within one-quarter mile of an existing or proposed school? (CEQA IXc)

The project site is located immediately south of the LTCC and the South Tahoe Middle School is located approximately one mile northeast of the WWTP. No hazardous emissions would occur for operation of the solar facility.

Environmental Analysis: *Less than Significant Impact.*

Required Mitigation: **None**.

3.4.11-4. Would the Project be located on a site which is included on a list of hazardous materials sites compiled pursuant to Government Code Section 65962.5 and, as a result, would it create a significant hazard to the public or the environment? (CEQA IXd)

No hazardous waste facilities or contaminated sites are identified within the project area (EnviroStor and GeoTracker, 2023).

Environmental Analysis: *No Impact.*

Required Mitigation: **None.**

3.4.11-5. For a Project located within an airport land use plan or, where such a plan has not been adopted, within two miles of a public airport or public use airport, would the Project result in a safety hazard or excessive noise for people residing or working in the project area? (CEQA IXe)

The STPUD WWTP is located approximately 1.5 miles northeast of the Lake Tahoe Airport. The 2019 Airport Land Use Compatibility Plan (ALUCP) indicates the WWTP is not located in the noise impact area contour (ALUCP Figure 4-1) but a portion of the WWTP on the west side is located within Airport Safety Zone 6 – Traffic Pattern Zone (ALUCP Figure 4-4). The proposed solar array facility and access roadway is outside of Zone 6, but a portion of the trenching necessary to connect the solar facility to the District's WWTP electrical service connection is inside Zone 6. All existing District land uses are compatible in Zone 6 and there are no use limitations identified in the ALUCP, although new uses within Zone 6 are to be reviewed to ensure the land uses do not pose safety risks to airport operations.

Environmental Analysis: *Less than Significant Impact.*

Required Mitigation: **None.**

3.4.11-6. Would the Project impair implementation of or physically interfere with an adopted emergency response plan or emergency evacuation plan? (CEQA IXf)

The solar project would not alter or revise the existing regulations or amend the City's Local Emergency Operations Plan or Emergency Management Plan. These actions would not impair the implementation of or physically interfere with the City Natural Hazard Management Plan or Emergency Management Plan and therefore results in no impact.

Environmental Analysis: *No Impact.*

Required Mitigation: **None.**

3.4.11-7. Would the Project expose people or structures, either directly or indirectly, to a significant risk of loss, injury or death involving wildland fires? (CEQA IXg)

The location of the WWTP property creates inherent risk of exposure of people and structures to wildfires since the project area is located in a LRA mapped by CalFire within in a Very High Fire Hazard Severity Zone. With the inherent danger of wildfire, the District and its solar development partner will include standard permit conditions required by the City of South Lake Tahoe building department, that follow requirements of California Building Code 2022, California Electrical Code 2022 and all other applicable state and jurisdictional codes to mitigate the potential for fire ignition at the solar facility.

Environmental Analysis: *Less than Significant Impact.*

Required Mitigation: **None**.

3.4.11-8. Will the Project involve a risk of an explosion or the release of hazardous substances including, but not limited to, oil, pesticides, chemicals, or radiation in the event of an accident or upset conditions? (TRPA 10a)

See discussion and analysis for Question 3.4.11-1 above. Although hazardous substances may be onsite for the purposes of operating machinery and equipment for construction and WWTP maintenance, the District's Spill Containment Plan would continue to be implemented to ensure a public safety hazard does not occur.

Environmental Analysis: *No Impact.*

Required Mitigation: **None**.

3.4.11-9. Will the Project involve possible interference with an emergency evacuation plan? (TRPA 10b)

See discussion and analysis for Question 3.4.11-6.

Environmental Analysis: *No Impact.*

Required Mitigation: **None.**

3.4.11-10. Will the Project result in creation of any health hazard or potential health hazard (excluding mental health)? (TRPA 17a)

See discussions and analyses for Questions 3.4.11-1 through 3.4.11-4 above.

Environmental Analysis: *No Impact.*

Required Mitigation: **None.**

3.4.11-11. Will the Project result in exposure of people to potential health hazards? (TRPA 17b)

See discussions and analyses for Questions 3.4.11-1 through 3.4.11-4 above.

Environmental Analysis: *No Impact.*

Required Mitigation: **None.**

3.4.12 Hydrology and Water Quality

This section presents the analyses for potential impacts to hydrology and water quality. Table 3-14 identifies the applicable impacts, anticipated level of impact, and whether mitigation measures are required to reduce impacts to a less than significant level.

Environmental Setting

The Project area is located in South Lake Tahoe, California, on the southern portion of the Lake Tahoe Basin in El Dorado County. The STPUD WWTP property is approximately one mile south of Highway 50 between Meadow Crest Drive and Al Tahoe Blvd. The project lies within Township 12 North and Range 18 East of the Mt. Diablo Meridian. Elevation of the Project area is approximately 6,270 feet above mean sea level (msl). The WWTP is within the 26,368-acre Trout Creek watershed - Trout Creek is located west of the WWTP and Heavenly Valley Creek, which runs into Trout Creek, is just to the south of the WWTP. Historically, Trout Creek has been a tributary that flowed into the Upper Truckee River in the Truckee Marsh area on the southern end of Lake Tahoe. The Tahoe Keys development channeled the Upper Truckee River transforming the area into the current landscape.

The Project area is contained within the Tahoe Valley South Groundwater Sub-Basin (TVGB), which is one of the three sub-basins comprising the greater North Lahontan Basin. The TVGB is located within the larger structural feature referred to as the Lake Tahoe Basin. The TVGB occupies a roughly triangular area and is bound on the southwest and southeast by the Sierra Nevada, on the north by the southern shore of Lake Tahoe, and to the northeast by the California-Nevada state line. The southern boundary extends about 3 miles south of the town of Meyers and forms the triangular apex. Elevations within the TVGB range from 6,225 feet at lake level to about 6,500 feet in the south (California Department of Water Resources 2004). STPUD supplies water to the area solely through groundwater. Generally, the groundwater quality of the area is excellent, with a few remediation locations around the Tahoe Y.

Groundwater recharge in the Project area is primarily from infiltration of precipitation into faults and fractures in bedrock, soils and decomposed granite overlaying much of the bedrock, and unconsolidated basin-fill deposits. Except where the land surface is impermeable or where the groundwater table coincides with land surface, groundwater is recharged over the extent of the flow path (Thodal 1997). No sub-basins in the Northern Lahontan Hydrologic Study Area are identified as subject to critical conditions of overdraft according to the 2017 STPUD Tahoe Valley South Basin Annual Water Report, which is based on California Department of Water Resources and Desert Institute data (STPUD 2017). The report indicates changes in groundwater storage in the Tahoe Valley South Sub-Basin have been minimal. California's Water Update also found no evidence of overdraft, and no overdrafts are expected in the Study Area, even in drought years.

The 2019 geotechnical investigation conducted for a recent LTCC project identified groundwater at an elevation of 30 feet below ground surface.

Table 3-14: Hydrology and Water Quality				
CEQA Environmental Checklist Item	**Potentially Significant Impact**	**Less Than Significant with Mitigation Measures**	**Less Than Significant Impact**	**No Impact**
3.4.12-1. Violate any water quality standards or waste discharge requirements or otherwise substantially degrade surface or groundwater quality? (CEQA Xa)			**X**	
3.4.12-2. Substantially decrease groundwater supplies or interfere substantially with groundwater recharge such that the project may impede sustainable groundwater management of the basin? (CEQA Xb)			**X**	
3.4.12-3. Substantially alter the existing drainage pattern of the site or area, including through the alteration of the course of a stream or river or through the addition of impervious surfaces, in a manner which would i) Result in substantial erosion or siltation on- or off-site; ii) Substantially increase the rate or amount of surface runoff in a manner which would result in flooding on- or off-site; iii) Create or contribute runoff water which would exceed the capacity of existing or planned stormwater drainage systems or provide substantial additional sources of polluted runoff; or iv) Impede or redirect flood flows? (CEQA Xc)			**X**	
3.4.12-4. In flood hazard, tsunami, or seiche zones, risk release of pollutants due to project inundation? (CEQA Xd)			**X**	
3.4.12-5. Conflict with or obstruct implementation of a water quality control plan or sustainable groundwater management plan? (CEQA Xe)				**X**

TRPA Initial Environmental Checklist Item	Yes	No, With Mitigation	Data Insufficient	No
3.4.12-6. Changes in currents, or the course or direction of water movements? (TRPA 3a)				**X**
3.4.12-7. Changes in absorption rates, drainage patterns, or the rate and amount of surface water runoff so that a 20 yr. 1 hr. storm runoff (approximately 1 inch per hour) cannot be contained on the site? (TRPA 3b)				**X**
3.4.12-8. Alterations to the course or flow of 100-year flood waters? (TRPA 3c)				**X**
3.4.12-9. Change in the amount of surface water in any water body? (TRPA 3d)				**X**
3.4.12-10. Discharge into surface waters, or in any alteration of surface water quality, including but not limited to temperature, dissolved oxygen or turbidity? (TRPA 3e)				**X**
3.4.12-11. Alteration of the direction or rate of flow of ground water? (TRPA 3f)				**X**
3.4.12-12. Change in the quantity of groundwater, either through direct additions or withdrawals, or through interception of an aquifer by cuts or excavations? (TRPA 3g)				**X**
3.4.12-13. Substantial reduction in the amount of water otherwise available for public water supplies? (TRPA 3h)				**X**
3.4.12-14. Exposure of people or property to water related hazards such as flooding and/or wave action from 100-year storm occurrence or seiches? (TRPA 3i)				**X**
3.4.12-15. The potential discharge of contaminants to the groundwater or any alteration of groundwater quality? (TRPA 3j)				**X**
3.4.12-16. Is the Project located within 600 feet of a drinking water source? (TRPA 3k)				**X**

3.4.12-1. Would the Project violate any water quality standards or waste discharge requirements or otherwise substantially degrade surface or groundwater quality? (CEQA Xa)

The Solar project does not discharge contaminating waste into area waterways or soils. No solar project facilities are proposed within previously undisturbed Land Capability District 1b (stream environment zone). The trench corridor that will provide the electrical connection from the solar array to the WWTP service drop will be located partially within existing SEZ land coverage. As discussed in the project description, the approximately 52,000 square feet of new land coverage is located outside of the Trout Creek and Heavenly Valley Creek drainage areas, and to the east of the existing WWTP facilities on high capability LCD. The solar project location is a relatively flat area, and the solar panels and access roadway are designed to naturally infiltrate and treat surface runoff from new impervious surfaces. Stormwater capture facilities (e.g., mulched disturbance areas, infiltration trenches) will be designed to contain a 20-year, one-hour storm event.

Accelerated erosion potential and surface water quality impacts are present during construction phasing and occur when protective vegetative cover is removed, and soils are disturbed. Site disturbance during construction could pose temporary impacts to surface water quality and beneficial uses of Project area receiving waters through increased pollutant concentrations in stormwater runoff. If not addressed by the Project, potentially significant impacts to surface water quality could occur from construction runoff, increased post construction runoff due to increased impervious area, atmospheric deposition (fugitive dust and particulate emissions), or accidental spills. A number of compliance measures, which are required by codified regulations or law, and standard engineering features and permanent BMPs are incorporated into the Project to avoid, reduce, and minimize potential impacts to surface water quality and beneficial uses.

Development and infrastructure improvements within the project area are required to meet the discharge standards of the Lahontan Regional Water Control Board. Projects that would create more than one acre of disturbance are required to prepare a Storm Water Pollution Prevention Plan (SWPPP). Since all existing state and local protections for surface water at the WWTP would remain in place and would not be altered by the project, and water quality BMPs such as coir logs and stormwater runoff management would be implemented during construction and operation of the new facilities, the solar project would not result in adverse discharges to surface waters or alteration of surface water quality.

Short and long-term impacts to surface water quality from construction of the new facilities and the increases in impervious area would be reduced and minimized through compliance with State, El Dorado County, and TRPA regulations and permit requirements, which require the implementation of effective, reasonable, and appropriate measures to protect water quality and beneficial uses. Runoff would be contained on-site through application of temporary BMPs during construction activities and disturbed soils would be stabilized in compliance with construction permits.

Environmental Analysis: *Less than Significant Impact.*

Required Mitigation: **None**.

3.4.12-2. Would the Project substantially deplete groundwater supplies or interfere substantially with groundwater recharge such that the project may impede sustainable groundwater management of the basin? (CEQA Xb)

The project does not require water to operate, nor does it propose to change groundwater management or include new uses that would affect the groundwater management plan. Although coverage would increase, the majority of the WWTP project area would remain undisturbed and would allow for continued groundwater recharge. In addition, onsite runoff management from the solar arrays would include the

development of armored or mulched surfaces at the solar array drip lines or infiltration trenches to catch runoff, allowing for runoff to be absorbed within the solar array area.

Environmental Analysis: *Less than Significant Impact*.

Required Mitigation: **None**.

3.4.12-3. Would the Project substantially alter the existing drainage pattern of the site or area, including through the alteration of the course of a stream or river or through the addition of impervious surfaces, in a manner which would (CEQA Xc):

3.4.12-3.i) Result in substantial erosion or siltation on- or off-site?

As discussed in Question 3.4.12-1, the solar facility would result in tree removal, limited grading for the access roadway, and land coverage changes; however, each new facility would include BMPs during construction and operation to address erosion and siltation. Based on the linear design of the new solar facility, new facilities may include drip line armoring or infiltration and/or drainage basins to collect and manage runoff resulting from new, impervious coverage during a 20-year, one-hour storm event.

Since trees would be removed as a component of the construction activity proposed for the solar array area and access roadway, construction best management practices would be in place until the solar array structures to be located where trees are removed are fully constructed. The affected areas would be covered with mulch to prevent offsite erosion.

Environmental Analysis: *Less than Significant Impact*.

Required Mitigation: **None.**

3.4.12-3.ii) Substantially increase the rate or amount of surface runoff in a manner which would result in flooding on- or off-site?

As described in the project description and in Question 3.4.12-1, the solar project would increase impervious surface land coverage by approximately 52,000 square feet, such that additional stormwater treatment features would be needed for each new facility to capture and manage stormwater onsite. Plans included in Appendix A shows this additional land coverage within LCDs 4/6 is within the total allowed coverage for the WWTP project area. With the inclusion of stormwater management features, the runoff from the solar facilities would be managed within the improvement area and would not contribute to on- or off-site flooding.

Tree removal under the TCP/THP would occur before solar facility installation. No tree removal would occur outside of a planned development project and the selective removal of trees across the WWTP property would not increase surface runoff to cause flooding as water would be able to infiltrate the ground and natural landscape until new development land coverage and best management practices are constructed.

Environmental Analysis: *Less than Significant Impact.*

Required Mitigation: **None.**

3.4.12-3.iii) Create or contribute runoff water which would exceed the capacity of existing or planned stormwater drainage systems or provide substantial additional sources of polluted runoff?

As discussed in Question 3.4.12-1 above and in the project description, the solar project includes BMPs and requires stormwater management improvements to manage a 20-year, one-hour storm event. The potential runoff volume from each new impervious surface would be calculated based on the detailed design and the proposed capacity of the stormwater trenches/basins and landscape surface treatment area engineered to provide adequate treatment capacity onsite. No significant impacts associated with polluted runoff would occur with implementation of these regulatory compliance measures, including implementation of the required SWPPP and BMPs.

Environmental Analysis: *Less than Significant Impact.*

Required Mitigation: **None.**

3.4.12-3.iv) Impede or redirect flood flows?

The solar project area is not located within the FEMA-mapped flood hazard area and improvements are not proposed within or near the Trout Creek or Heavenly Valley Creek channels.

Environmental Analysis: *Less than Significant Impact.*

Required Mitigation: **None.**

3.4.12-4. Would the Project in flood hazard, tsunami, or seiche zones, risk release of pollutants due to project inundation? (CEQA Xd)

Based on studies by Ichinose et al. (2000), a potential exists for tsunami and seiche-related waves between 10 and 30 feet in height to occur along the shore of Lake Tahoe, potentially threatening low-lying lakeside communities. The STPUD WWTP is 1.5 miles inland from the lake shore and 60 feet higher in elevation and is therefore outside of a seiche or tsunami zone.

Environmental Analysis: *Less than Significant Impact.*

Required Mitigation: **None.**

3.4.12-5. Would the Project conflict with or obstruct implementation of a water quality control plan or sustainable groundwater management plan? (CEQA Xe)

As discussed in Questions 3.4.12-1 and 3.4.12-2 above, the project would include onsite runoff management and is not located within a groundwater well protection area. Operation of the solar facilities would not obstruct implementation of a water quality control plan or sustainable groundwater management plan.

Environmental Analysis: *Less than Significant Impact.*

Required Mitigation: **None.**

3.4.12-6. Will the Project result in changes in currents, or the course or direction of water movements? (TRPA 3a)

The solar project is not located within a waterway and does not propose to reroute flows to change the course or direction of water movements.

Environmental Analysis: *No Impact.*

Required Mitigation: **None.**

3.4.12-7. Will the Project result in changes in absorption rates, drainage patterns, or the rate and amount of surface water runoff so that a 20 yr. 1 hr. storm runoff (approximately 1 inch per hour) cannot be contained on the site? (TRPA 3b)

See discussions and analyses for Questions 3.4.12-1 and 3.4.12-3.

Environmental Analysis: *No Impact.*

Required Mitigation: **None.**

3.4.12-8. Will the Project result in alterations to the course or flow of 100-year floodwaters? (TRPA 3c)

The solar project area is located outside of the 100-year floodplain, as discussed under Question 3.4.12-3 above.

Environmental Analysis: *No Impact.*

Required Mitigation: **None.**

3.4.12-9. Will the Project result in change in the amount of surface water in any water body? (TRPA 3d)

See discussions and analyses for Questions 3.4.12-1 and 3.4.12-3. There are no water bodies within the developed portion of the WWTP property. No extraction of surface water is proposed and the solar project requires no additional water use at the WWTP.

Environmental Analysis: *No Impact.*

Required Mitigation: **None.**

3.4.12-10. Will the Project result in discharge into surface waters, or in any alteration of surface water quality, including but not limited to temperature, dissolved oxygen or turbidity? (TRPA 3e)

See discussions and analyses for Question 3.4.12-1 above. All projects that would create more than one acre of disturbance are required to prepare a Storm Water Pollution Prevention Plan (SWPPP) in compliance with the City's Stormwater Management Plan. As discussed in Chapter 2, Regulatory Compliance Measures are included to address runoff and water quality. Therefore, BMPs and a SWPPP would be implemented as part of the solar project implementation.

Environmental Analysis: *No Impact.*

Required Mitigation: **None.**

3.4.12-11. Will the Project result in alteration of the direction or rate of flow of ground water? (TRPA 3f)

See discussions and analyses for Question 3.4.12-2.

Environmental Analysis: *No Impact.*

Required Mitigation: **None.**

3.4.12-12. Will the Project result in change in the quantity of groundwater, either through direct additions or withdrawals, or through interception of an aquifer by cuts or excavations? (TRPA 3g)

See discussions and analyses for Questions 3.4.12-9 through 3.4.12-11 above.

Environmental Analysis: *No Impact.*

Required Mitigation: **None.**

3.4.12-13. Will the Project result in substantial reduction in the amount of water otherwise available for public water supplies? (TRPA 3h)

See discussion and analysis in Question 3.4.12-9 above and analyses in Questions 3.4.21-1 and 3.4.21-2 below which conclude that potential impact of development on the availability of public water supplies would not have an impact.

Environmental Analysis: *No Impact.*

Required Mitigation: **None.**

3.4.12-14. Will the Project result in exposure of people or property to water related hazards such as flooding and/or wave action from 100-year storm occurrence or seiches? (TRPA 3i)

See discussions and analyses for Questions 3.4.12-3, 3.4.12-4, and 3.4.12-8 above.

Environmental Analysis: *No Impact.*

Required Mitigation: **None.**

3.4.12-15. Will the Project result in potential discharge of contaminants to the groundwater or any alteration of groundwater quality? (TRPA 3j)

See discussions and analyses for Questions 3.4.12-9 through 3.4.12-11 above.

Environmental Analysis: *No Impact.*

Required Mitigation: **None.**

3.4.12-16. Is the Project located within 600 feet of a drinking water source? (TRPA 3k)

The solar project area is not located within 600 feet of drinking water sources and is outside the mapped source water protection zones for existing wells. (TRPA, 2000).

Environmental Analysis: *No Impact.*

Required Mitigation: **None.**

3.4.13 Land Use and Planning

This section presents the analyses for potential impacts to land use and planning. Table 3-15 identifies the applicable impacts, anticipated level of impact, and whether mitigation measures are required to reduce impacts to a less than significant level.

Environmental Setting

The STPUD WWTP property is within the Bijou/Al Tahoe Community Plan Area (Plan Area Statement 98), Truckee Marsh Plan Area Statement (PAS 100) and Bijou Meadow (PAS 101). The existing WWTP is located within the Bijou/Al Tahoe Community Plan boundary. A majority of the solar project components (access roadway and solar arrays) are planned in the adjacent Bijou Meadow plan area.

TRPA and the City of South Lake Tahoe have adopted the Bijou/Al Tahoe Community Plan (PAS 98) that specifies permissible land uses within the Project area. The Land Use Classification in the Bijou/Al Tahoe Community Plan area is Commercial/Public Services, with a Management Strategy of Redirection. The WWTP is located within District 4 – Town Center District. Permissible uses in District 4 include but are not limited to local public health and safety facilities (A), public utility centers (S), regional public health and safety facilities (S), pipelines and power transmission (S), and a majority of the resource management uses. The TRPA has determined that the proposed solar facility will be an accessory use to the WWTP's primary use, which operates as a public health and safety facility.

The City of South Lake Tahoe General Plan (2011) Land Use Diagram classified the WWTP area as "Special District" Policy LU-2.5 Bijou/Al Tahoe Community Plan Area states, "The City shall encourage the creation of a viable residential neighborhood with appropriate neighborhood amenities and compatible high quality family-oriented recreation and public facilities including government offices." Priorities for this area as identified in the General Plan include expanding the role of the Bijou/Al Tahoe Community Plan area as an economic center.

Table 3-15: Land Use and Planning

CEQA Environmental Checklist Item	Potentially Significant Impact	Less Than Significant with Mitigation Measures	Less Than Significant Impact	No Impact
3.4.13-1. Physically divide an established community? (CEQA XIa)				X
3.4.13-2. Cause a significant environmental impact due to a conflict with any land use plan, policy, or regulation adopted for the purpose of avoiding or mitigating an environmental effect? (CEQA XIb)				X
TRPA Initial Environmental Checklist Item	**Yes**	**No, With Mitigation**	**Data Insufficient**	**No**
3.4.13-3. Include uses which are not listed as permissible uses in				X

the applicable Plan Area Statement, adopted Community Plan, or Master Plan? (TRPA 8a)				
3.4.13-4. Expand or intensify an existing non-conforming use? (TRPA 8b)				**X**

3.4.13-1. Would the Project physically divide an established community? (CEQA XIa)

Development of new solar facilities nearby to the WWTP would not physically divide an established community as the property is associated with the WWTP and already off limits to public access.

Environmental Analysis: *No Impact*.

Required Mitigation: **None.**

3.4.13-2. Would the Project cause a significant environmental impact due to a conflict with any land use plan, policy, or regulation adopted for the purpose of avoiding or mitigating an environmental effect? (CEQA XIb)

The solar project supports an existing public service (WWTP) facility by providing a new source of green energy, a key goal of many regional land use plans. By providing clean energy to power the WWTP, the project supports existing land use plans, policies and regulations adopted to avoid environmental impacts.

The following table (Table 3-16) addresses each proposed use in regard to land use compatibility within Bijou/Al Tahoe Community Plan District 4 (Town Center District):

Table 3-16

Solar Project Land Use Compatibility Analysis

Use or Action	Compatibility Analysis
Solar Array (Solar Field)	Accessory to the Primary Public Service Facility use. This project does not result in a new public service land use, it supports the existing WWTP.
Access Roadway	Allowed. Supports the primary use.
Electrical Connection Trenching	Allowed. Supports the primary use.

Use of the WWTP property for facilities that benefit existing public service land uses is consistent with the Bijou/Al Tahoe Community Plan, City General Plan and TRPA Regional Plan. No development is proposed within the mapped SEZ or other areas surrounding Trout Creek or Heavenly Valley Creek.

Environmental Analysis: *No Impact*.

Required Mitigation: None

3.4.13-3. Will the Project include uses which are not listed as permissible uses in the applicable Plan Area Statement, adopted Community Plan, or Master Plan? (TRPA 8a)

As discussed in Question 3.4.13-2, the proposed solar facility is considered an accessory use to the existing WWTP, a public health and safety facility allowed within the adopted Bijou/Al Tahoe Community Plan and adjacent Bijou Meadow Plan Area.

Environmental Analysis: *No Impact*.

Required Mitigation: **None.**

3.4.13-4. Will the Project expand or intensify an existing non-conforming use? (TRPA 8b)

None of the existing uses at the WWTP are non-conforming.

Environmental Analysis: *No Impact*.

Required Mitigation: **None.**

3.4.14 Mineral Resources (CEQA) and Natural Resources (TRPA)

This section presents the analyses for potential impacts to mineral resources and natural resources. Table 3-17 identifies the applicable impacts, anticipated level of impact, and whether mitigation measures are required to reduce impacts to a less than significant level.

Environmental Setting

Mineral resources are aggregate resources, which consist of sand, gravel and crushed rock. The State Mining and Geology Board classifies mineral deposits through maps and reports at: http://www.conservation.ca.gov/cgs/minerals/mlc/Pages/Index.aspx. The map and accompanying text provides general information about the current availability of California's permitted aggregate resources. There are currently no important mineral resources identified on the STPUD WWTP property.

Table 3-17: Mineral Resources and Natural Resources

CEQA Environmental Checklist Item	Potentially Significant Impact	Less Than Significant with Mitigation Measures	Less Than Significant Impact	No Impact
3.4.14-1. Result in the loss of availability of a known mineral resource that would be of value to the region and the residents of the state? (CEQA XIIa)				X
3.4.14-2. Result in the loss of availability of a locally-important mineral resource recovery site delineated on a local general plan, specific plan or other land use plan? (CEQA XIIb)				X
TRPA Initial Environmental Checklist Item	**Yes**	**No, With Mitigation**	**Data Insufficient**	**No**
3.4.14-3. A substantial increase in the rate of use of any natural resources? (TRPA 9a)				X
3.4.14-4. Substantial depletion of any non-renewable natural resource? (TRPA 9b)				X

3.4.14-1. Would the Project result in the loss of availability of a known mineral resource that would be of value to the region and the residents of the state? (CEQA XIIa)

There are no mapped mineral resources within the City of South Lake Tahoe, including the STPUD property, nor does any applicable plan identify any sites within the project area as an important mineral recovery site.

Environmental Analysis: *No Impact.*

Required Mitigation: **None.**

3.4.14-2. Would the Project result in the loss of availability of a locally-important mineral resource recovery site delineated on a local general plan, specific plan or other land use plan? (CEQA XIIb)

See discussion and analysis for Question 3.4.14-1 above.

Environmental Analysis: *No Impact.*

Required Mitigation: **None.**

3.4.14-3. Will the Project result in a substantial increase in the rate of use of any natural resources? (TRPA 9a)

The use of natural resources, such as construction metals and fuel/gasoline would occur as solar facilities are developed. However, long term operation of the solar facility would not result in a substantial increase in the rate of use of any natural resources. The solar facility would help offset existing electricity use with green energy, effectively reducing the use of natural resources.

Environmental Analysis: *No Impact.*

Required Mitigation: **None.**

3.4.14-4. Will the Project result in a substantial depletion of any non-renewable natural resource? (TRPA 9b)

See discussion and analysis for Question 3.4.14-3 above.

Environmental Analysis: *No Impact.*

Required Mitigation: **None.**

3.4.15 Noise

This section presents the analyses for potential impacts related to noise. Table 3-18 identifies the applicable impacts, anticipated level of impact, and whether mitigation measures are required to reduce impacts to a less than significant level.

Environmental Setting

The STPUD WWTP is located within the Bijou/Al Tahoe Community Plan District 4 which establishes a Community Noise Equivalent Level (CNEL) standard of 60 dBA CNEL. The WWTP is located just outside the noise contours for the airport as provided in Figure 4-1 of the 2019 Airport Land Use Compatibility Plan. The Solar Project does not create a new source of noise.

Table 3-18: Noise

CEQA Environmental Checklist Item	Potentially Significant Impact	Less Than Significant with Mitigation Measures	Less Than Significant Impact	No Impact
3.4.15-1. Generation of a substantial temporary or permanent increase in ambient noise levels in the vicinity of the Project in excess of standards established in the local general plan or noise ordinance, or other applicable local, state, or federal standards? (CEQA XIIIa)				X
3.4.15-2. Generation of excessive groundborne vibration or groundborne noise levels? (CEQA XIIIb)				X
3.4.15-3. For a Project located within the vicinity of a private airstrip or an airport land use plan or, where such a plan has not been adopted, within two miles of a public airport or public use airport, would the Project expose people residing or working in the project area to excessive noise levels? (CEQA XIIIc)				X
TRPA Initial Environmental Checklist Item	**Yes**	**No, With Mitigation**	**Data Insufficient**	**No**
3.4.15-4. Increases in existing Community Noise Equivalency Levels (CNEL) beyond those permitted in the applicable Plan Area Statement, Community Plan or Master Plan? (TRPA 6a)				X
3.4.15-5. Exposure of people to severe noise levels? (TRPA 6b)				X

3.4.15-6. Single event noise levels greater than those set forth in the TRPA Noise Environmental Threshold? (TRPA 6c)				**X**
3.4.15-7. The placement of residential or tourist accommodation uses in areas where the existing CNEL exceeds 60 dBA or is otherwise incompatible? (TRPA 6d)				**X**
3.4.15-8. The placement of uses that would generate an incompatible noise level in close proximity to existing residential or tourist accommodation uses? (TRPA 6e)				**X**
3.4.15-9. Exposure of existing structures to levels of ground vibration that could result in structural damage? (TRPA 6f)				**X**

3.4.15-1. Would the Project generate a substantial temporary or permanent increase in ambient noise levels in the vicinity of the Project in excess of standards established in the local general plan or noise ordinance, or other applicable local, state, or federal standards? (CEQA XIIIa)

Operation of the solar facility would not result in a significant permanent increase in ambient noise levels in excess of the noise limits established for District 4 of the Community Plan. Although noise may be produced by maintenance personnel on occasion, overall operational noise levels would be unchanged and well within the CNEL limits.

Construction of the solar facilities and tree removal under the TCP/THP would temporarily increase noise levels during active construction or tree removal activities. However, construction activities would be limited to between the hours of 8 a.m. and 6:30 p.m. and the noise standards established in the City noise ordinance, TRPA Regional Plan, and Community Plan would not be applicable. Increased noise levels would be temporary and equipment idling is required to be minimized. Construction activities include site preparation (e.g., demolition, clearing, excavation, grading), foundation work, paving of the access road, utility installation, finishing, and cleanup. These activities typically involve the use of noise-generating equipment such as excavators, dozers, graders, dump trucks, generators, backhoes, compactors, and loaders. Noise levels associated with these types of equipment are typically between 70 and 85 dBA Lmax at 50 feet.

Environmental Analysis: *Less than Significant Impact.*

Required Mitigation: **None.**

3.4.15-2. Would the Project generate excessive groundborne vibration or groundborne noise levels? (CEQA XIIIb)

The City of South Lake Tahoe and TRPA do not establish standards for evaluating construction vibration levels. Human and structural response to different vibration levels is influenced by a number of factors, including ground type, distance between source and receptor, duration, and the number of perceived vibration events. Vibration criteria developed by Caltrans indicate that the threshold for damage to structures ranges from 2 to 6 in/sec. One-half this minimum threshold or 1 in/sec p.p.v. is considered a safe

criterion that would protect against architectural or structural damage. The general threshold at which human annoyance could occur it notes as 0.1 in/sec p.p.v.

No blasting is proposed, and facility construction would occur with the use of standard construction equipment, such as dozers, excavators and concrete saws. Use of this equipment would be limited to the construction period required for solar facility completion. The vibration produced by such equipment would not be significant to cause structural damage or unsafe conditions and in addition, would be located at least 400 feet from existing District buildings.

Environmental Analysis: *Less than Significant Impact*.

Required Mitigation: **None.**

3.4.15-3. For a Project located within the vicinity of a private airstrip or an airport land use plan or, where such a plan has not been adopted, within two miles of a public airport or public use airport, would the Project expose people residing or working in the project area to excessive noise levels? (CEQA XIIIc)

The WWTP is located outside the City's Airport Land Use Compatibility Plan noise contour, but a portion of the plant is within Safety Zone 6. Safety Zone 6 encompasses the Main Admin Building and generally the areas west and immediately south. The solar project site lies outside Safety Zone 6.

Environmental Analysis: *No Impact.*

Required Mitigation: **None.**

3.4.15-4. Would the Project result in increases in existing Community Noise Equivalency Levels (CNEL) beyond those permitted in the applicable Plan Area Statement, Community Plan or Master Plan? (TRPA 6a)

See the response to Question 3.4.15-1, above. The project would not create any operational noise on a regular basis, only occasional maintenance activities which would be well below existing CNEL levels.

Environmental Analysis: *No Impact.*

Required Mitigation**: None.**

3.4.15-5. Would the Project result in exposure of people to severe noise levels? (TRPA 6b)

See the response to Question 3.4.15-1.

Environmental Analysis: *No Impact.*

Required Mitigation: **None.**

3.4.15-6. Will the Project result in single event noise levels greater than those set forth in the TRPA Noise Environmental Threshold? (TRPA 6c)

See the response to Question 3.4.15-1.

Environmental Analysis: *No Impact.*

Required Mitigation: **None.**

3.4.15-7. Will the Project result in the placement of residential or tourist accommodation uses in areas where the existing CNEL exceeds 60 dBA or is otherwise incompatible? (TRPA 6d)

The Project does not include residential or tourist accommodation land uses.

Environmental Analysis: *No Impact.*

Required Mitigation: **None.**

3.4.15-8. Will the Project result in the placement of uses that would generate an incompatible noise level in close proximity to existing residential or tourist accommodation uses? (TRPA 6e)

See the response to Question 3.4.15-1, above. There are no tourist accommodation uses in the vicinity, and noise levels at the nearest off-site residence would be below the noise threshold. No incompatible noise levels would be generated by solar facility operations.

Environmental Analysis: *No Impact.*

Required Mitigation: **None.**

3.4.15-9. Will the Project expose existing structures to levels of ground vibration that could result in structural damage? (TRPA 6f)

See the response to Question 3.4.15-2.

Environmental Analysis: *No Impact.*

Required Mitigation: **None.**

3.4.16 Population and Housing

This section presents the analyses for potential impacts to population and housing. Table 3-19 identifies the applicable impacts, anticipated level of impact, and whether mitigation measures are required to reduce impacts to a less than significant level.

Environmental Setting

As of 2019, the population in the City of South Lake Tahoe was estimated to be 22,197 persons by the U.S. Census, which is approximately the same as the population in 2010 (21,410), and approximately the same as the population was in 1990 (21,941), despite population increases to over 23,800 in 2001. In general, the population of the area has remained nearly the same over the last 30 years.

STPUD employs approximately 100 full-time employees and the Solar Project would not change employment as it would be operated by a Solar Partner.

No housing is provided on the STPUD WWTP property. Residential neighborhoods are located in the vicinity of LTCC, immediately west of the LTCC property and to the southeast along Al Tahoe Blvd.

Table 3-19: Population and Housing

CEQA Environmental Checklist Item	Potentially Significant Impact	Less Than Significant with Mitigation Measures	Less Than Significant Impact	No Impact
3.4.16-1. Induce substantial unplanned population growth in an area, either directly (for example, by proposing new homes and businesses) or indirectly (for example, through extension of roads or other infrastructure)? (CEQA XIVa)				X
3.4.16-2. Displace substantial numbers of existing people or housing, necessitating the construction of replacement housing elsewhere? (CEQA XIVb)				X
TRPA Initial Environmental Checklist Item	**Yes**	**No, With Mitigation**	**Data Insufficient**	**No**
3.4.16-3. Alter the location, distribution, density, or growth rate of the human population planned for the Region? (TRPA 11a)				X
3.4.16-4. Include or result in the temporary or permanent displacement of residents? (TRPA 11b)				X

3.4.16-5. Affect existing housing, or create a demand for additional housing? To determine if the proposal will affect existing housing or create a demand for additional housing, please answer the following questions: (1) Will the proposal decrease the amount of housing in the Tahoe Region? (2) Will the proposal decrease the amount of housing in the Tahoe Region historically or currently being rented at rates affordable by lower and very-low-income households? (TRPA 12a)				**X**
3.4.16-6. Will the proposal result in the loss of housing for lower-income and very-low-income households? (TRPA 12b)				**X**

3.4.16-1. Would the Project induce substantial unplanned population growth in an area, either directly (for example, by proposing new homes and businesses) or indirectly (for example, through extension of roads or other infrastructure)? (CEQA XIVa)

The Solar Project would a provide green power source for the existing WWTP electrical demand. The reduction in electrical demand on Liberty Utilities would not be substantial enough to indirectly induce substantial unplanned population growth.

Environmental Analysis: *No Impact.*

Required Mitigation: **None.**

3.4.16-2. Would the Project displace substantial numbers of existing people or housing, necessitating the construction of replacement housing elsewhere? (CEQA XIVb)

The Solar Project would not remove existing housing or utilize land that could one day provide housing.

Environmental Analysis: *No Impact.*

Required Mitigation: **None.**

3.4.16-3. Will the Project alter the location, distribution, density, or growth rate of the human population planned for the Region? (TRPA 11a)

See discussion and analysis for Questions 3.4.16-1 and 3.4.16-2.

Environmental Analysis: *No Impact.*

Required Mitigation: **None.**

3.4.16-4. Will the Project include or result in the temporary or permanent displacement of residents? (TRPA 11b)

See discussion and analysis for Question 3.4.16-2.

Environmental Analysis: *No Impact.*

Required Mitigation: **None.**

3.4.16-5. Will the Project affect existing housing, or create a demand for additional housing?

(1) Will the proposal decrease the amount of housing in the Tahoe Region? (2) Will the proposal decrease the amount of housing in the Tahoe Region historically or currently being rented at rates affordable by lower and very-low-income households? (TRPA 12a)

See discussion and analysis for Question 3.4.16-2.

Environmental Analysis: *No Impact.*

Required Mitigation: **None.**

3.4.16-6. Will the Project result in the loss of housing for lower-income and very-low-income households? (TRPA 12b)

See discussion and analysis for Question 3.4.16-2.

Environmental Analysis: *No Impact.*

Required Mitigation: **None.**

3.4.17 Public Services

This section presents the analyses for potential impacts to public services. Table 3-20 identifies the applicable impacts, anticipated level of impact, and whether mitigation measures are required to reduce impacts to a less than significant level.

Environmental Setting

Fire protection is primarily provided by the City of South Lake Tahoe Fire Rescue, with support from Lake Valley Fire Protection District. South Lake Tahoe Fire Rescue provides emergency medical service and fire protection service to approximately 22,000 residents in a 16.6 mile area. The department currently operates three staffed fire stations including Fire Station One (at Ski Run Blvd and Pioneer Trail) Fire Station Two (2951 Lake Tahoe Blvd), and Fire Station Three (2101 Lake Tahoe Blvd). Currently the fire department operates a daily schedule of 9 suppression personnel plus a Battalion Chief for a total of 10 on duty as minimum daily staffing. Total staffing for the department is 34 line personnel, 4 chief officers (Fire Chief and 3 Battalion Chiefs), one fire inspector and one administrative assistant to the Fire Chief (Drennan, 2021). Lake Valley Fire Protection District also serves a portion of the Project area. There are 28 personnel with the District and the District operates a Joint Powers Authority with the City of South Lake Tahoe. The District covers 86 square miles and runs approximately 1,400 calls a year. The District operates out of Station 7 (2211 Keetak Street), Station 6 (1286 Golden Bear Trail), and Cal Fire Station 5 (1009 Boulder Mountain Ct.). (http://www.lakevalleyfire.org, Accessed April 13, 2020).

The City of South Lake Tahoe provides primary law enforcement services to the Project area, including 911 services, crisis negotiation, detectives, gang enforcement, K-9, SWAT and other field and administrative operations.

The Project area is served by the Lake Tahoe Unified School District, which operates the South Tahoe High School, South Tahoe Middle School, Tahoe Valley Elementary School, Sierra House Elementary School, Lake Tahoe Environmental Science Magnet School, Bijou Community School, Independent Learning Academy, Mt. Tallac Continuation High School, and the recently opened Elevated Digital Learning Academy, which is an online learning school option serving grades K-8. In 1996, District enrollment was nearly 6,000 students; however, enrollment has steadily declined over the past decades, to a total enrollment of roughly 3,800 students in 2019 (see Table 3-21) with enrollment in the elementary schools declining by approximately 200 students since 2015 and enrollment in the middle and high school increasing by approximately 200 students since 2015 (2019-20 School Accountability Report Cards).

Table 3-21

Tahoe Area K-12 2019 School Enrollment

School	Grades	Enrollment 2019
Bijou Community School	K-5	563
Sierra House Elementary	K-5	467
LTESMS	K-5	376
Tahoe Valley Elementary School	K-5	401
South Tahoe Middle School	6-8	918
South Tahoe High School	9-12	1,082
Total		**3,800**

Source: Lake Tahoe Unified School District, 2019

The South Lake Tahoe Library is located at 1000 Rufus Allen Blvd. in South Lake Tahoe and operates Tuesdays through Saturdays. The library offers books of various types, e-books, various types of media, meeting room, and access to computer, printing, and copying services.

The U.S. Post Office is located adjacent to the northern portion of the LTCC property at 1046 Al Tahoe Blvd. The U.S. Forest Service Office is located on the LTCC property, near the entrance on College Drive.

Table 3-20: Public Services

CEQA Environmental Checklist Item	Potentially Significant Impact	Less Than Significant with Mitigation Measures	Less Than Significant Impact	No Impact
3.4.17-1. Would the Project result in substantial adverse physical impacts associated with the provision of new or physically altered governmental facilities, or the need for new or physically altered governmental facilities, the construction of which could cause significant environmental impacts, in order to maintain acceptable service ratios, response times or other performance objectives for any of the public services:				
Fire protection?				X
Police protection?				X
Schools?				X
Parks?				X
Other public facilities? (CEQA XVa)				X
TRPA Initial Environmental Checklist Item	**Yes**	**No, With Mitigation**	**Data Insufficient**	**No**
Will the proposal have an unplanned effect upon, or result in a need for new or altered governmental services in any of the following areas?				
3.4.17-2. Fire protection? (TRPA 14a)				X
3.4.17-3. Police protection? (TRPA 14b)				X
3.4.17-4. Schools? (TRPA 14c)				X
3.4.17-5. Parks or other recreational facilities? (TRPA 14d)				X
3.4.17-6. Maintenance of public facilities, including roads? (TRPA 14e)				X
3.4.17-7. Other governmental services? (TRPA 14f)				X

3.4.17-1. Would the Project result in substantial adverse physical impacts associated with the provision of new or physically altered governmental facilities, need for new or physically altered governmental facilities, the construction of which could cause significant environmental impacts, in order to maintain acceptable service ratios, response times or other performance objectives for any of the public services: Fire protection? Police protection? Schools? Parks? Other public facilities? (CEQA XVa)

No increase in demand for any public services would occur as a result of the Solar Project construction. The Project does not include new population or local employment that would increase demand for public service facilities or personnel.

Environmental Analysis: *No Impact.*

Required Mitigation: **None.**

3.4.17-2. Will the Project have an unplanned effect upon, or result in a need for new or altered governmental services: fire protection? (TRPA 14a)

See discussion and analysis for Question 3.4.17-1.

Environmental Analysis: *No Impact.*

Required Mitigation: **None.**

3.4.17-3. Will the Project have an unplanned effect upon, or result in a need for new or altered governmental services: police protection? (TRPA 14b)

See discussion and analysis for Question 3.4.17-1.

Environmental Analysis: *No Impact.*

Required Mitigation: **None.**

3.4.17-4. Will the Project have an unplanned effect upon, or result in a need for new or altered governmental services: schools? (TRPA 14c)

See discussion and analysis for Question 3.4.17-1.

Environmental Analysis: *No Impact.*

Required Mitigation: **None.**

3.4.17-5. Will the Project have an unplanned effect upon, or result in a need for new or altered governmental services: parks or other recreational facilities? (TRPA 14d)

See discussion and analysis for Question 3.4.17-1.

Environmental Analysis: *No Impact*

Required Mitigation: **None.**

3.4.17-6. Will the Project have an unplanned effect upon, or result in a need for new or altered governmental services in maintenance of public facilities, including roads? (TRPA 14e)

The new solar facility will be maintained by STPUD's solar provider partner and as such, will not increase maintenance requirements for District personnel.

Environmental Analysis*: No Impact.*

Required Mitigation: **None.**

3.4.17-7. Will the Project have an unplanned effect upon, or result in a need for new or altered governmental services in other governmental services? (TRPA 14f)

There are no other known governmental services that would be directly affected by the Solar Project.

Environmental Analysis*: No Impact.*

Required Mitigation: **None.**

3.4.18 Recreation

This section presents the analyses for potential impacts to recreation. Table 3-22 identifies the applicable impacts, anticipated level of impact, and whether mitigation measures are required to reduce impacts to a less than significant level.

Environmental Setting

The South Lake Tahoe Area is a major recreation destination, with a variety of opportunities including alpine and Nordic skiing, water sports, hiking, beaches, camping, mountain biking, and many other types of recreation. The Solar Project area is part of the Bijou Meadow Plan Area, which has a recreation land use classification. However, the project site is owned by the STPUD and would not be used for recreational use in the future given its location immediately adjacent to the STPUD WWTP.

Table 3-22: Recreation				
CEQA Environmental Checklist Item	**Potentially Significant Impact**	**Less Than Significant with Mitigation Measures**	**Less Than Significant Impact**	**No Impact**
3.4.18-1. Increase the use of existing neighborhood and regional parks or other recreational facilities such that substantial physical deterioration of the facility would occur or be accelerated? (CEQA XVIa)				**X**
3.4.18-2. Include recreational facilities or require the construction or expansion of recreational facilities which might have an adverse physical effect on the environment? (CEQA XVIa)				**X**
TRPA Initial Environmental Checklist Item	**Yes**	**No, With Mitigation**	**Data Insufficient**	**No**
3.4.18-3. Create additional demand for recreation facilities? (TRPA 19a)				**X**
3.4.18-4. Create additional recreation capacity? TRPA 19b)				**X**
3.4.18-5. Have the potential to create conflicts between recreation uses, either existing or proposed? (TRPA 19c)				**X**
3.4.18-6. Result in a decrease or loss of public access to any lake, waterway, or public lands? (TRPA 19d)				**X**

3.4.18-1. Would the Project increase the use of existing neighborhood and regional parks or other recreational facilities such that substantial physical deterioration of the facility would occur or be accelerated? (CEQA XVIa)

The Solar Project would not add population or local employment that could increase the use of existing recreational facilities.

Environmental Analysis: *No Impact.*

Required Mitigation: **None.**

3.4.18-2. Would the Project include recreational facilities or require the construction or expansion of recreational facilities which might have an adverse physical effect on the environment? (CEQA XVIb)

The Solar Project does not provide recreational facilities and would not add population or local employment that could increase the use of existing recreational facilities.

Environmental Analysis: *Less than Significant Impact*.

Required Mitigation: **None.**

3.4.18-3. Will the Project create additional demand for recreation facilities? (TRPA 19a)

See discussion and analysis for Question 3.4.18-1.

Environmental Analysis: *No Impact*.

Required Mitigation: **None.**

3.4.18-4. Will the Project create additional recreation capacity? (TRPA 19b)

See discussion and analysis for Question 3.4.18-2.

Environmental Analysis: *No Impact.*

Required Mitigation: **None.**

3.4.18-5. Will the Project have the potential to create conflicts between recreation uses, either existing or proposed? (TRPA 19c)

The Solar Project will be located on lands owned by the STPUD and not available for public recreation use.

Environmental Analysis: *No Impact.*

Required Mitigation: **None.**

3.4.18-6. Will the Project result in a decrease or loss of public access to any lake, waterway, or public lands? (TRPA 19d)

See discussion and analysis for Question 3.4.18-5.

Environmental Analysis: *No Impact.*

Required Mitigation: **None.**

3.4.19 Transportation (CEQA) and Traffic and Circulation (TRPA)

This section presents the analyses for potential impacts to transportation, traffic and circulation. Table 3-23 identifies the applicable impacts, anticipated level of impact, and whether mitigation measures are required to reduce impacts to a less than significant level.

Environmental Setting

The STPUD WWTP is accessed through U.S. 50 to the north, Pioneer Trail to the south, Al Tahoe Boulevard to the east, and through Meadow Crest Drive from the west, which is the primary entrance to the WWTP. The Solar Project does not include new population or local employment that would generate new traffic, and it does not alter existing transportation facilities.

Table 3-23: Transportation, Traffic and Circulation

CEQA Environmental Checklist Item	Potentially Significant Impact	Less Than Significant with Mitigation Measures	Less Than Significant Impact	No Impact
3.4.19-1. Conflict with a program, plan, ordinance or policy addressing the circulation system, including transit, roadway, bicycle, and pedestrian facilities? (CEQA XVIIa)				X
3.4.19-2. Conflict with or be inconsistent with CEQA Guidelines section 15064.3, subdivision (b)? (CEQA XVIIb)				X
3.4.19-3. Substantially increase hazards due to a design feature (e.g., sharp curves or dangerous intersections) or incompatible uses (e.g., farm equipment)? (CEQA XVIIc)				X
3.4.19-4. Result in inadequate emergency access? (CEQA XVIId)				X
TRPA Initial Environmental Checklist Item	**Yes,**	**No, With Mitigation**	**Data Insufficient**	**No**
3.4.19-5. Generation of 100 or more new Daily Vehicle Trip Ends (DVTE)? (TRPA 13a)				X
3.4.19-6. Changes to existing parking facilities, or demand for new parking? (TRPA 13b)				X
3.4.19-7. Substantial impact upon existing transportation systems, including highway, transit, bicycle or pedestrian facilities? (TRPA 13c)				X

3.4.19-8. Alterations to present patterns of circulation or movement of people and/or goods? (TRPA 13d)				**X**
3.4.19-9. Alterations to waterborne, rail or air traffic? (TRPA 13e)				**X**
3.4.19-10. Increase in traffic hazards to motor vehicles, bicyclists, or pedestrians? (TRPA 13f)				**X**

3.4.19-1. Would the Project conflict with a program, plan, ordinance or policy addressing the circulation system, including transit, roadway, bicycle, and pedestrian facilities? (CEQA XVIIa)

The Solar Project does not include new population or local employment that would generate new traffic or parking demand, and it does not alter existing transportation facilities.

Environmental Analysis: *No Impact.*

Required Mitigation: **None.**

3.4.19-2. Would the Project conflict with or be inconsistent with CEQA Guidelines section 15064.3, subdivision (b)? (CEQA XVIIb)

See discussion and analysis for Question 3.4.19-1.

Environmental Analysis: *No Impact.*

Required Mitigation: **None.**

3.4.19-3. Would the Project substantially increase hazards due to a design feature (e.g., sharp curves or dangerous intersections) or incompatible uses (e.g., farm equipment)? (CEQA XVIIc)

See discussion and analysis for Question 3.4.19-1.

Environmental Analysis: *No Impact.*

Required Mitigation: **None.**

3.4.19-4. Would the Project result in inadequate emergency access? (CEQA XVIId)

See discussion and analysis for Question 3.4.19-1.

Environmental Analysis: *No Impact.*

Required Mitigation: **None.**

3.4.19-5. Will the Project result in generation of 100 or more new Daily Vehicle Trip Ends (DVTE)? (TRPA 13a)

See discussion and analysis for Question 3.4.19-1.

Environmental Analysis: *No Impact.*

Required Mitigation: **None.**

3.4.19-6. Will the Project result in changes to existing parking facilities, or demand for new parking? (TRPA 13b)

See discussion and analysis for Question 3.4.19-1.

Environmental Analysis: *No Impact.*

Required Mitigation: **None.**

3.4.19-7. Will the Project result in substantial impact upon existing transportation systems, including highway, transit, bicycle or pedestrian facilities? (TRPA 13c)

See discussion and analysis for Question 3.4.19-1.

Environmental Analysis: *No Impact.*

Required Mitigation: **None.**

3.4.19-8. Will the Project result in alterations to present patterns of circulation or movement of people and/or goods? (TRPA 13d)

See discussion and analysis for Question 3.4.19-1.

Environmental Analysis: *No Impact.*

Required Mitigation: **None.**

3.4.19-9. Will the Project result in alterations to waterborne, rail or air traffic? (TRPA 13e)

See discussion and analysis for Question 3.4.19-1.

Environmental Analysis: *No Impact.*

Required Mitigation: **None.**

3.4.19-10. Will the Project result in increase in traffic hazards to motor vehicles, bicyclists, or pedestrians? (TRPA 13f)

See discussion and analysis for Question 3.4.19-1.

Environmental Analysis: *No Impact.*

Required Mitigation: **None.**

3.4.20 Tribal Cultural Resources (CEQA) and Archaeological/Historical (TRPA)

This section presents the analyses for potential impacts to tribal cultural, archaeological and historical resources, discussing the Project impacts on tribal cultural resources related to the disturbance of archaeological, historical, and Native American/traditional heritage resources. Table 3-24 identifies the applicable impacts, anticipated level of impact, and whether mitigation measures are required to reduce impacts to a less than significant level.

Environmental Setting

Area tribes were contacted pursuant to AB 52 to determine if cultural resources were present on the STPUD WWTP property area. In compliance with AB 52, letters were sent to the Native American Heritage Commission, and the Washoe Tribe of Nevada and California in April 2023 with information regarding the STPUD Solar Project and requesting additional information regarding the STPUD WWTP Project area. No responses have been provided to the letters or follow up email messages sent May 22, 2023.

On February 10, 2021, the LTCC (located to the north of the WWTP) consulted with the Washoe Tribe of Nevada and California via a letter and mapping attachments in regard to a proposed LTCC Facilities Master Plan Project, a potential tribal resource on the LTCC campus for which the tribe was able to provide additional information, and in regard to collaborating on potential interpretive efforts for another known resource near Trout Creek, west of the proposed LTCC master plan development footprint and well outside of the STPUD solar project footprint. No tribal resources have been identified within the STPUD WWTP property.

Table 3-24: Tribal Cultural Resources and Archaeological/Historical

CEQA Environmental Checklist Item	Potentially Significant Impact	Less Than Significant with Mitigation Measures	Less Than Significant Impact	No Impact
Has a California Native American Tribe requested consultation in accordance with Public Resources Code section 21080.3.1(b)? Yes: X No:				
Would the project cause a substantial adverse change in the significance of a tribal cultural resource, defined in Public Resources Code section 21074 as either a site, feature, place, cultural landscape that is geographically defined in terms of the size and scope of the landscape, sacred place, or object with cultural value to a California Native American tribe, and that is:				
3.4.20-1. Listed or eligible for listing in the California Register of Historical Resources, or in a local register of historical resources as defined in Public Resources Code section 5020.1(k)? (CEQA XVIIIa)				**X**

3.4.20-2. A resource determined by the lead agency, in its discretion and supported by substantial evidence, to be significant pursuant to criteria set forth in subdivision (c) of Public Resources Code Section 5024.1. In applying the criteria set forth in subdivision (c) of Public Resources Code Section 5024.1, the lead agency shall consider the significance of the resource to a California Native American tribe. (CEQA XVIIIb)				**X**
TRPA Initial Environmental Checklist Item	**Yes**	**No, With Mitigation**	**Data Insufficient**	**No**
3.4.20-3. Does the proposal have the potential to cause a physical change which would affect unique ethnic cultural values? (TRPA 20d)				**X**
3.4.20-4. Will the proposal restrict historic or pre-historic religious or sacred uses within the potential impact area? (TRPA 20e)				**X**

3.4.20-1. Would the Project cause a substantial adverse change in the significance of a tribal cultural resource listed or eligible for listing in the California Register of Historical Resources, or in a local register of historical resources as defined in Public Resources Code section 5020.1(k)? (CEQA XVIIIa)?

There are no known tribal resources within the vicinity of the proposed STPUD Solar Project and therefore, no impacts to tribal cultural resources would occur. A Washoe cultural site is located to the north of the WWTP property on LTCC campus lands located south of the existing campus buildings. Known as site P09-4560, this site consists of two ellipsoid features that were been used by the Washoe Tribe. Based on consultation with the Washoe Tribe, these sites will be protected during LTCC development authorized in the adoption of their Facilities Master Plan. In addition, these sites will not be impacted by the proposed solar project.

Environmental Analysis: *No Impact*.

Required Mitigation: **None.**

3.4.20-2. Would the Project cause a substantial adverse change in the significance of a tribal cultural resource determined by the lead agency, in its discretion and supported by substantial evidence, to be significant pursuant to criteria set forth in subdivision (c) of Public Resources Code Section 5024.1? *In applying the criteria set forth in subdivision (c) of Public Resources Code Section 5024.1, the lead agency shall consider the significance of the resource to a California Native American tribe.* (CEQA XVIIIb)

See discussion and analysis for Question 3.4.20-1 above. The STPUD Solar project areas are located approximately 2000 feet from known tribal resources to the north within the LTCC campus. No resources were identified during cultural resources surveys of the site conducted in July 2022. Therefore, no impact to tribal cultural resources will occur.

Environmental Analysis: *No Impact*.

Required Mitigation: **None.**

3.4.20-3. Does the Project have the potential to cause a physical change which would affect unique ethnic cultural values? (TRPA 20d)

See discussions and analyses for Questions 3.4.20-1 and 3.4.20-2 above.

Environmental Analysis: *No.*

Required Mitigation: **None.**

3.4.20-4. Will the Project restrict historic or pre-historic religious or sacred uses within the potential impact area? (TRPA 20e)

See discussions and analyses for Questions 3.4.20-1 and 3.4.20-2 above.

Environmental Analysis: *No.*

Required Mitigation: **None.**

3.4.21 Utilities and Service Systems (CEQA) and Utilities (TRPA)

This section presents the analysis for potential impacts to utilities and service systems. Table 3-25 identifies the applicable impacts, anticipated level of impact, and whether mitigation measures are required to reduce impacts to a less than significant level.

Environmental Setting

The South Tahoe Public Utility District (STPUD) provides water service to the Project Vicinity. Serving over 14,000 residential and commercial water connection sites within its 27,000-acre service area, STPUD operates 14 active supply wells and two standby wells and distributes water through 320 miles of potable water pipe.

STPUD also provides wastewater service to the project vicinity and operates the WWTP on the Solar facility project area. The proposed solar facility will be used to partially power the WWTP. Sewage is transported to the WWTP, which has an average flow of 4.5 million gallons per day and capacity of 7.7 million gallons per day. Approximately 1.8 billion gallons are treated annually. Treated wastewater is exported to Alpine County. (http://www.stpud.us, Accessed May 18, 2016).

Solid waste service is provided by South Tahoe Refuse and Recycling. The Solar Project will not generate solid waste.

No existing stormwater drainage facilities are located in the location of the proposed solar arrays. Curb and gutter are located on both sides of Al Tahoe Blvd. and along along Meadow Crest Drive near the WWTP entrance. Stormwater systems are also in place to capture and treat stormwater within the WWTP.

Communications services are provided by AT&T and cable/internet services by Spectrum. Communications infrastructure is located underground and serves each WWTP facility based on type and use of the facility.

Table 3-25: Utilities and Service Systems				
CEQA Environmental Checklist Item	**Potentially Significant Impact**	**Less Than Significant with Mitigation Measures**	**Less Than Significant Impact**	**No Impact**
3.4.21-1. Require or result in the relocation or construction of new or expanded water, wastewater treatment or stormwater drainage, electric power, natural gas, or telecommunication facilities, the construction or relocation of which could cause significant environmental effects? (CEQA XIXa)			X	
3.4.21-2. Have sufficient water supplies available to serve the and reasonably foreseeable future development during normal, dry, and multiple dry years? (CEQA XIXb)				X
3.4.21-3. Result in a determination by the wastewater treatment provider that serves or may serve the Project that it has adequate capacity to serve the Project's projected demand in addition to the provider's existing commitments? (CEQA XIXc)				X
3.4.21-4. Generate solid waste in excess of State or local standards, or in excess of the capacity of local infrastructure, or otherwise impair the attainment of solid waste reduction goals? (CEQA XIXd)				X
3.4.21-5. Comply with federal, state, and local management and reduction statutes and regulations related to solid waste? (CEQA XIXe)				X
TRPA Initial Environmental Checklist Item	**Yes**	**No, With Mitigation**	**Data Insufficient**	**No**
Except for planned improvements, will the proposal result in a need for new systems, or substantial alterations to the following utilities:				

TRPA Initial Environmental Checklist Item	Yes	No, With Mitigation	Data Insufficient	No
3.4.21-6. Power or natural gas? (TRPA 16a)				**X**
3.4.21-7. Communication systems? (TRPA 16b)				**X**
3.4.21-8. Utilize additional water which amount will exceed the maximum permitted capacity of the service provider? (TRPA 16c)				**X**
3.4.21-9. Utilize additional sewage treatment capacity which amount will exceed the maximum permitted capacity of the sewage treatment provider? (TRPA 16d)				**X**
3.4.21-10. Storm water drainage? (TRPA 16e)				**X**
3.4.21-11. Solid waste and disposal? (TRPA 16f)				**X**

3.4.21-1. Would the Project require or result in the relocation or construction of new or expanded water, wastewater treatment or stormwater drainage, electric power, natural gas, or telecommunication facilities, the construction or relocation of which could cause significant environmental effects? (CEQA XIXa)

Water and Wastewater. The Solar project does not require new water or wastewater service.

Solid Waste. The Solar project does not generate solid waste.

Energy (Gas and Electricity). The Solar project will generate green electricity that will be used to partially power existing WWTP operations. This is a beneficial impact, reducing power costs for the District and it's customers. No gas service is required for the solar facility.

Stormwater. State, El Dorado County, and TRPA regulations and permit requirements require the implementation of effective, reasonable, and appropriate measures to address storm water. New facilities are required to show how stormwater will be captured and dispersed during the permitting process; therefore, plans for the solar project components will be required to depict site hydrology and demonstrate onsite runoff treatment. Stormwater generated on the WWTP is addressed through onsite collection and conveyance. District facilities typically include drainage basins associated with each new facility to collect onsite runoff with adequate capacity for 20-year events based on the proposed coverage per project. These basins and conveyance systems are based on the actual proposed land coverage and layout of the facility structures. Since the District addresses runoff onsite through these onsite drainage facilities, no demand will be placed on offsite City stormwater system facilities.

Environmental Analysis: *Less than Significant Impact.*

Required Mitigation: **None.**

3.4.21-2. Would the Project have sufficient water supplies available to serve the project and reasonably foreseeable future development during normal, dry, and multiple dry years? (CEQA XIXb)

See the analysis for Question 3.4.21.1.

Environmental Analysis: *No Impact*.

Required Mitigation: **None.**

3.4.21-3. Would the Project result in a determination by the wastewater treatment provider which serves or may serve the Project that it has adequate capacity to serve the Project's projected demand in addition to the provider's existing commitments? (CEQA XIXc)

See the analysis for Question 3.4.21.1.

Environmental Analysis: *No Impact*.

Required Mitigation: **None.**

3.4.21-4. Would the Project generate solid waste in excess of State or local standards, or in excess of the capacity of local infrastructure, or otherwise impair the attainment of solid waste reduction goals? (CEQA XIXd)

See the analysis for Question 3.4.21.1.

Environmental Analysis: *No Impact*.

Required Mitigation: **None.**

3.4.21-5. Would the Project comply with federal, state, and local management and reduction statutes and regulations related to solid waste? (CEQA XIXe)

See the analysis for Question 3.4.21.1.

Environmental Analysis: *No Impact*.

Required Mitigation: **None.**

3.4.21-6. Except for planned improvements, will the Project result in a need for new systems, or substantial alterations to power or natural gas? (TRPA 16a)

See the analysis for Question 3.4.21.1.

Environmental Analysis: *No Impact*.

Required Mitigation: **None.**

3.4.21-7. Except for planned improvements, will the Project result in a need for new systems, or substantial alterations to communication systems? (TRPA 16b)

Communication systems are not listed as a required basic service by TRPA Code of Ordinances; however, the City Code requires any communication wires to be installed underground (Chapter 6.15 SLTCC). Any communication system required for operation of the solar project would be provided using existing service systems at the WWTP.

Environmental Analysis: *No Impact*.

Required Mitigation: **None.**

3.4.21-8. Except for planned improvements, will the Project result in a need for new systems, or substantial alterations to utilize additional water which amount will exceed the maximum permitted capacity of the service provider? (TRPA 16c)

See the analysis for Question 3.4.21.1.

Environmental Analysis: *No Impact*.

Required Mitigation: **None.**

3.4.21-9. Except for planned improvements, will the Project result in a need for new systems, or substantial alterations to utilize additional sewage treatment capacity which amount will exceed the maximum permitted capacity of the sewage treatment provider? (TRPA 16d)

See the analysis for Question 3.4.21.1.

Environmental Analysis: *No Impact*.

Required Mitigation: **None.**

3.4.21-10. Except for planned improvements, will the Project result in a need for new systems, or substantial alterations to storm water drainage? (TRPA 16e)

See the analysis for Question 3.4.21.1.

Environmental Analysis: *No Impact*.

Required Mitigation: **None.**

3.4.21-11. Except for planned improvements, will the Project result in a need for new systems, or substantial alterations to solid waste and disposal? (TRPA 16f)

See the analysis for Question 3.4.21.1.

Environmental Analysis: *No Impact*.

Required Mitigation: **None.**

3.4.22 Wildfire (CEQA)

This section presents the analysis for potential impacts related to wildfire. Table 3-26 identifies the applicable impacts, anticipated level of impact, and whether mitigation measures are required to reduce impacts to a less than significant level.

Environmental Setting

The project area is located entirely within the very high fire hazard severity zone as mapped by CAL FIRE (https://osfm.fire.ca.gov/media/5788/south_lake_tahoe.pdf). U.S. 50 and Pioneer Trail, located on each end of Al Tahoe Blvd., are primary evacuation routes for the South Lake Tahoe area.

Table 3-26: Wildfire

CEQA Environmental Checklist Item	Potentially Significant Impact	Less Than Significant with Mitigation Measures	Less Than Significant Impact	No Impact
Is the Project located in or near state responsibility areas or lands classified as high fire hazard severity zones? Yes: X No:				
If located in or near state responsibility areas or lands classified as very high fire hazard severity zones, would the project:				
3.4.22-1. Substantially impair an adopted emergency response plan or emergency evacuation plan? (CEQA XXa)				**X**
3.4.22-2. Due to slope, prevailing winds, and other factors, exacerbate wildfire risks, and thereby expose project occupants to pollutant concentrations from a wildfire or the uncontrolled spread of a wildfire? (CEQA XXb)			**X**	
3.4.22-3. Require the installation of associated infrastructure (such as roads, fuel breaks, emergency water sources, power lines or other utilities) that may exacerbate fire risk or that may result in temporary or ongoing impacts to the environment? (CEQA XXc)			**X**	
3.4.22-4. Expose people or structures to significant risks, including downslope or downstream flooding or landslides, as a result of runoff,				**X**

post-fire slope instability, or drainage changes? (CEQA XXd)				

3.4.22-1. Would the Project substantially impair an adopted emergency response plan or emergency evacuation plan? (CEQA XXa)

The Solar Project facility is not located along any existing roadways and therefore does not impact emergency plans.

Environmental Analysis: *No Impact.*

Required Mitigation: **None.**

3.4.22-2. Due to slope, prevailing winds, and other factors, would the Project exacerbate wildfire risks, and thereby expose project occupants to pollutant concentrations from a wildfire or the uncontrolled spread of a wildfire? (CEQA XXb)

The Solar Project would not increase wildfire risk. Based on compliance with existing codes, the solar panels would create no risk of starting a wildfire, but like other constructed structures, fire can spread on the solar installation if started either on the electrical connections or surrounding vegetation. The solar panels and installation will be certified through UL 61730 for a fire class type 33 which tests them to have an allowable spread of flame of 2.4m (8 feet) or less in 10 minutes. Measures that are built into facility design for fire safety include the following:

- Vegetation will be managed as part of facility operation to avoid fire spreading into the installation from adjacent vegetation/trees, and to avoid vegetation being in direct contact with the system.

- The connectors utilized to connect one solar panel to another are weatherproof, insulated, and have a locking mechanism that can only be opened with a specialized tool. These wires are then attached to either the structure or the solar panels so that no electrical wire is hanging from the installation. All electrical connections from the solar array to offsite facilities are enclosed and/or completely insulated so no live electrical part is exposed or accessible. The security fence is included as a further safety measure to assure that only authorized and qualified personnel can access the solar installation.

- All exposed metal pieces are bonded to ground to protect them from getting energized by the system, therefore preventing any electrical shock/fire hazard that could arise if they ever contact vegetation, animals, or a person.

- Minimizing shading over the solar installation by cutting tall trees within the buffer area. Partial shading on the solar panels may generate hot spots over the solar panels if these shading issues are constant. These hot spots would not cause a fire on the solar panel itself but could start a fire on vegetation that is in direct contact with them.

For ground mounted solar installations, most fire concerns are the same as any electrical installation which are inherently taken care by electrical requirements set by the California Electrical Code and National Electrical Code to assure safety of the installation. Even in the case of solar installations on a building structure, the concern is not whether the solar system may start a fire but instead how fast will an external fire spread to the solar system (hence the UL 61730 tests on fire spread). The STPUD Solar Project

installation will follow the most up-to-date electrical code requirements and all equipment to be installed will be certified and listed for its intended use.

Environmental Analysis: *Less than Significant Impact.*

Required Mitigation: **None**.

3.4.22-3. Would the Project require the installation of associated infrastructure (such as roads, fuel breaks, emergency water sources, power lines or other utilities) that may exacerbate fire risk or that may result in temporary or ongoing impacts to the environment? (CEQA XXc)

See the analysis for Question 3.4.22.2. In addition to protections implemented for the solar array, connections of the solar array to the District's WWTP electrical service will be placed underground eliminating potential risk of fire from overhead utility lines.

Environmental Analysis: *Less than Significant Impact.*

Required Mitigation: **None.**

3.4.22-4. Expose people or structures to significant risks, including downslope or downstream flooding or landslides, as a result of runoff, post-fire slope instability, or drainage changes? (CEQA XXd)

The STPUD WWTP property and proposed location for the Solar facility is relatively flat. Downstream flooding or landslides following a fire would not occur.

Environmental Analysis: *No Impact.*

Required Mitigation: **None.**

3.4.23 Mandatory Findings of Significance

This section presents the analyses for mandatory findings of significance. Table 3-27 identifies the applicable impacts, anticipated level of impact, and whether mitigation measures are required to reduce impacts to a less than significant level.

Table 3-27: Mandatory Findings of Significance

CEQA Environmental Checklist Item	Potentially Significant Impact	Less Than Significant with Mitigation Measures	Less Than Significant Impact	No Impact
3.4.23-1. Does the Project have the potential to degrade the quality of the environment, substantially reduce the habitat of a fish or wildlife species, cause a fish or wildlife population to drop below self-sustaining levels, threaten to eliminate a plant or animal community, substantially reduce the number or restrict the range of an endangered, rare or threatened species, or eliminate important examples of the major periods of California history or prehistory? (CEQA XXIa)		X		
3.4.23-2. Does the Project have impacts that are individually limited, but cumulatively considerable? ("Cumulatively considerable" means that the incremental effects of a project are considerable when viewed in connection with the effects of past projects, the effects of other current projects, and the effects of probable future projects)? (CEQA XXIb)			X	
3.4.23-3. Does the Project have environmental effects which will cause substantial adverse effects on human beings, either directly or indirectly? (CEQA XXIc)				X
TRPA Initial Environmental Checklist Item	**Yes**	**No, With Mitigation**	**Data Insufficient**	**No**
3.4.23-4. Does the Project have the potential to degrade the quality of the environment, substantially reduce the habitat of a fish		X		

population to drop below self-sustaining levels, threaten to eliminate a plant or animal community, reduce the number or restrict the range of a rare or endangered plant or animal or eliminate important examples of the major periods of California or Nevada history or prehistory? (TRPA 21a)				
3.4.23-5. Does the Project have the potential to achieve short-term, to the disadvantage of long-term, environmental goals? (A short-term impact on the environment is one which occurs in a relatively brief, definitive period of time, while long-term impacts will endure well into the future.) (TRPA 21b)				**X**
3.4.23-6. Does the Project have impacts which are individually limited, but cumulatively considerable? (A project may impact on two or more separate resources where the impact on each resource is relatively small, but where the effect of the total of those impacts on the environmental is significant?) (TRPA 21c)				**X**
3.4.23-7. Does the Project have environmental impacts which will cause substantial adverse effects on human being, either directly or indirectly? (TRPA 21d)				**X**

3.4.23-1. Does the Project have the potential to degrade the quality of the environment, substantially reduce the habitat of a fish or wildlife species, cause a fish or wildlife population to drop below self-sustaining levels, threaten to eliminate a plant or animal community, substantially reduce the number or restrict the range of an endangered, rare or threatened species, or eliminate important examples of the major periods of California history or prehistory? (CEQA XXIa)

<u>Fish and Aquatic Habitat</u>

The Solar Project results in no changes to Trout Creek or Heavenly Valley Creek or its surrounding riparian area and no impact would occur.

Rare, Threatened, or Endangered Species and Communities

There are no rare, threatened, or endangered species or communities within the District's WWTP property. Species that may use the adjacent riparian area along Trout Creek or Heavenly Valley Creek would not be affected by the project as no changes to those habitats are proposed. Implementation of Mitigation Measure BIO-1 ensures the protection of bird species that may be present in the area.

Cultural, Historical, and Archeological Resources

The Solar Project results in no changes to known cultural, historical or archaeological resources.

Environmental Analysis: *Less than Significant Impact with Mitigation Measures*.

Required Mitigation: **BIO-1. Bird Nest Site Protection Program**

3.4.23-2. Does the Project have impacts that are individually limited, but cumulatively considerable? ("Cumulatively considerable" means that the incremental effects of a project are considerable when viewed in connection with the effects of past projects, the effects of other current projects, and the effects of probable future projects)? (CEQA XXIb)

The STPUD and its solar partners propose to construct a green power generation facility adjacent to the existing WWTP. Other probable future projects in the vicinity include the City's Recreation Center, redevelopment projects, numerous affordable housing projects, and buildout of the LTCC Facilities Master Plan. Facilities considered in the LTCC Master Plan include student housing, expansion of physical education facilities, on-campus public safety training facilities, and improved accessibility and use efficiency. The recently approved TCAP amendment increases potential density for multi-family housing as part of a future redevelopment of existing tourist land uses.

Air Quality/GHG Emissions

As discussed in Questions 3.3.8-3 and 3.3.6-1, the construction and operation of the STPUD Solar Project would not result in increases in operational air quality and GHG emissions. Using solar power for operation of the existing WWTP would benefit GHG emissions. The combined impact is less than significant.

Traffic

As discussed in the analysis, the Solar Project would not create measurable changes to operational traffic at the WWTP. Trips associated with solar facility construction and tree removal under the TCP/THP would result in relatively few trips over a short period of time (several months) compared to background traffic conditions. The combined impact is less than significant.

Water Quality

The solar facilities would include best management practices and manage stormwater runoff onsite so that no contribution to a cumulative water quality impact occurs. No activity is proposed within area waterways to result in a cumulative change to water flows or flooding. WWTP infiltration facilities are designed to accommodate the volume of runoff generated by a 20-year 1-hour storm for existing facilities. Therefore, new solar development will not contribute additional runoff that would exceed the capacity of existing or

planned stormwater drainage system. Tree removal under the TCP/THP would not affect water quality, as only 7 acres of the 114 acre District property will be converted to non-forest use.

Cultural Resources

Known cultural resources are located outside of the WWTP property boundary; therefore the project would not contribute to an adverse cumulative effect on archeological or historical resources.

Noise

The solar project will not change noise levels at the WWTP. Noise resulting from tree removal and facility construction would be temporary and would not contribute to a cumulative ambient noise level increase.

Geologic Hazards

The WWTP property is relatively flat on soils that are not prone to instability, and is outside the seismic hazard zones. Land coverage required for the solar facility is within base allowable land coverage limits for the WWTP project area.

Scenic Resources

As discussed in the analysis, the solar facilities result in no significant impact to scenic resources based on screening provided by the adjacent forest that will remain following construction.

Public Services and Utilities

The Solar facility does not require connection to public utility providers and does not increase service needs for power or natural resources. The power generated by the solar facility would benefit the electrical grid. Tree removal under the TCP/THP would not affect public services or utilities.

Environmental Analysis: *Less than Significant Impact.*

Required Mitigation: **None**

3.4.23-3. Does the Project have environmental effects which will cause substantial adverse effects on human beings, either directly or indirectly? (CEQA XIXc)

The project area is urbanized on three sides and already partially developed and the potential for new impacts to human beings is low. The Project does not include land uses that pose adverse health impacts. By partially replacing demand from the electric grid with a cleaner energy source, the Project incrementally benefits GHG emissions. Therefore, implementation of the Solar Project would not create a substantial direct or indirect adverse effect on human beings.

Environmental Analysis: *No Impact.*

Required Mitigation: **None.**

3.4.23-4. Does the Project have the potential to degrade the quality of the environment, substantially reduce the habitat of a fish population to drop below self-sustaining levels, threaten to eliminate a plant or animal community, reduce the number or restrict the range of a rare or endangered plant or animal or eliminate important examples of the major periods of California or Nevada history or prehistory? (TRPA 21a)

See analysis in Question 3.4.23-1 that concludes implementation of the proposed Solar Project would not degrade the quality of the environment, reduce habitat of a fish population, threaten or eliminate a plant or animal community or eliminate important examples of a major period of California or Nevada history or prehistory.

Environmental Analysis: *No Impact with Mitigation.*

Required Mitigation: **BIO-1. Bird Nest Site Protection Program**

3.4.23-5. Does the Project have the potential to achieve short-term, to the disadvantage of long-term, environmental goals? (TRPA 21b)

The Solar Project is a solution to providing cleaner energy for existing power needs and helps solve long-range goals to reduce GHG emissions. While short-term impacts could occur during construction activities, the solar facilities help achieve long-term goals established by both the local government and state.

Environmental Analysis: *No Impact.*

Required Mitigation: **None**.

3.4.23-6. Does the Project have impacts which are individually limited, but cumulatively considerable? (A project may impact on two or more separate resources where the impact on each resource is relatively small, but where the effect of the total of those impacts on the environment is significant?) (TRPA 21c)

See analysis in Question 3.4.23-2.

Environmental Analysis: *No Impact*

Required Mitigation: **None.**

3.4.23-7. Does the Project have environmental impacts which will cause substantial adverse effects on human being, either directly or indirectly? (TRPA 21d)

See analysis in Question 3.4.23-3.

Environmental Analysis: *No Impact.*

Required Mitigation: **None.**

3.5 CERTIFICATION [TRPA ONLY]

I hereby certify that the statements furnished above and in the attached exhibits present the data and information required for this initial evaluation to the best of my ability, and that the facts, statements, and information presented are true and correct to the best of my knowledge and belief.

Tahoe Regional Planning Agency	Date

3.6 REFERENCES

Alquist-Priolo Earthquake Fault Zoning Act. 1972. (California PRC Division 2. Geology, Mine and Mining Chapter 7.5 Earthquake Fault Zoning)

Ascent. 2013. *TRPA Regional Plan Update Final Environmental Impact Statement*. October 24, 2013. Stateline, Nevada.

Bailey, R.G. 1974. *Land Capability Classification of the Lake Tahoe Basin, California - Nevada*. U.S. Forest Service, Department of Agriculture in cooperation with the Tahoe Regional Planning Agency, 32 pages.

Bryant W.A., Hart E.W. 2007. *Fault-Rupture Hazard Zone in California: Alquist-Priolo Earthquake Fault Zoning Act With Index to Earthquake Fault Zone Maps*. Sacramento, California.

CARB. *See* California Air Resource Board

California Air Resource Board. 2008. *Climate Change Scoping Plan: A Framework for Change*. http://www.arb.ca.gov/cc/scoping/scoping.htm.

Ibid. 2014. First Update to the Climate Change Scoping Plan. http://www.arb.ca.gov/cc/scopingplan/ document/updatedscopingplan2013.htm.

Ibid. 2019. Air Quality Standards and Area Designations. http://www.arb.ca.gov/desig/desig.htm accessed on 10/20/2019.

California Department of Fish and Wildlife (CDFW). 2020. California Natural Diversity Data Base. Accessed April 3, 2020.

California, Department of Toxic Substances Control (DTSC). 2020. Hazardous Waste and Substances Site List. Accessed online at: www.envirostor.dtsc.ca.gov/public. April 2020.

CalFire. https://osfm.fire.ca.gov/media/5788/south_lake_tahoe.pdf.

California Geological Survey. 2007. Seismic Shaking Hazards in California. Updated: June 12, 2008. http://maps.conservation.ca.gov/cgs/fam/ Accessed August 1, 2016

California Mining and Geology Board. Mines and Mineral Resources Maps .https://maps.conservation.ca.gov/mineralresources/. Accessed April 2020

California Water Resources Control Board. 2020. GeoTracker. http://geotracker.waterboards.ca.gov. Site accessed April 2020.

Chandler, Shannon. 2021. Lake Tahoe Unified School District. Personal Communication. January 21, 2021.

City of South Lake Tahoe. 2011. *City of South Lake Tahoe General Plan Environmental Impact Report*. Certified May 17, 2011.

Ibid. 2011b. *City of South Lake Tahoe General Plan Policy Document*. Adopted May 17, 2011. https://cityofslt.us/575/General-Plan. Accessed December 2019.

Ibid. City of South Lake Tahoe Fire Rescue. www.cityofslt.us, Accessed April 13, 2020.

City of South Lake Tahoe Airport. 2019. Airport Land Use Compatibility Plan.

Drennan, Jim. 2021. South Lake Tahoe Fire Rescue. Personal Communication with Jim Drennan, Battalion Chief. January. 5, 2021.

Environmental Protection Agency. 2020. *National Ambient Air Quality Standards (NAAQS).* https://www.epa.gov/green-book. Accessed April, 2020.

Geotechnical Engineering Investigation Report Lake Tahoe Community College Early Learning Center South Lake Tahoe, California. 2019. BSL Associates Engineers & Laboratories.

Ichinose, G.A., J.G. Anderson, K. Satake, R.A. Schweickert, and M.M. Lahren. 2000. *The potential hazard from tsunami and seiche waves generated by large earthquakes within the Lake Tahoe, California-Nevada*. Geophysical Research Letters 27(8): 1203-1206.

Lake Tahoe Unified School District. 2019. School Accountability Report Cards. Accessed 8/10/18.

Lake Valley Fire Protection District. 2020. http://www.lakevalleyfire.org, Accessed April 13, 2020.

Meston, Jeff. 2018. Personal Communication with Fire Chief Jeff Meston, South Lake Tahoe Fire Department. November 27, 2019.

Nevada Division of Environmental Protection. 2013. Solid Waste Disposal Site Permit – Lockwood Regional Landfill, Permit #SW214R03. https://ndep.nv.gov/uploads/land-waste-solid-permit-docs/lockwood-permit-rev03.pdf.

NDOW. 1975. Carson River Deer Herd Report. Carson City, NV.

STPUD. *See* South Tahoe Public Utility District

South Tahoe Public Utility District (STPUD). 2011. 2010 Urban Water Management Plan.

Ibid. 2013. Administrative Code. March 8, 2013.

Ibid. 2016. 2015 Urban Water Management Plan. June 2016.

Ibid. 2018. District Information. http://www.stpud.us/districtinfo.html. accessed August 2018.

South Tahoe Refuse. 2016. http://www.southtahoerefuse.com.

Southwest Gas. 2017. Facility Relocation Agreement and College Way Main Reinforcement Plan Sheets.

Thodal, Carl E. 1997. Hydrogeology of Lake Tahoe Basin, California and Nevada, and Results of a Ground-Water Quality Monitoring Network, Water Years 1990-1992. Water-Resources Investigations Report 97-4072. USGS. 53 p.

TRPA. *See* Tahoe Regional Planning Agency

Tahoe Regional Planning Agency. 1993. *Lake Tahoe Scenic Resources Evaluation*. Stateline, Nevada.

Ibid. 1995 (October). *Bijou/Al Tahoe Community Plan*. Stateline, Nevada

Ibid. 2000 (June). *Lake Tahoe Source Water Protection Program*. Stateline, Nevada

Ibid. 2012a (April 25). *Regional Plan Update, Draft EIS*. Stateline, Nevada.

Ibid. 2012b (October 24). *Regional Plan Update Final EIS*. Stateline, Nevada.

Ibid. 2012c (December 12). *Code of Ordinances*. Stateline, Nevada.

Ibid. 2012d (December 12) *Regional Plan*. Stateline, Nevada.

Ibid. 2012e (April). 2011 *Threshold Evaluation, Draft*. Stateline, Nevada.

Ibid. 2012f (October 24). Staff Summary to the TRPA/TMPO Governing Board and Advisory Planning Commission. Exhibit of Existing Development Statistics and Maps. Stateline, Nevada.

United States Census Bureau. 2014.

United States Department of Agriculture, Natural Resources Conservation Service. 2007. *Soil survey of the Tahoe Basin Area, California and Nevada.* Accessible online at: http://soils.usda.gov/survey/printed_surveys/. Site accessed August, 2018.

USDA Forest Service, LTBMU 2010 Basin-wide Non-game Native Fish Survey 2010 Annual Report. 9pp

United States Geological Survey. NRCS Web Soil Survey http://websoilsurvey.nrcs.usda.gov/ Accessed August 1, 2016.

United States Geological Survey. 2002. *Fact Sheet 035-02: Estimated Flood Flows in the Lake Tahoe Basin, California and Nevada*. [online] http://pubs.usgs.gov/fs/fs03502/report.html

United States Geological Survey. 2000. *Surface and Ground Water Characteristics in the Upper Truckee River and Trout Creek Watersheds*. http://pubs.usgs.gov/wri/wri004001/Text/contents.htm

U.S. Fish and Wildlife Service (USFWS). 2020. *Information, Planning, and Conservation System*. http://ecos.fws.gov/ipac/. Site Accessed 2022.

Washoe County. 2016. Solid Waste Management Plan of Washoe County. November 2016. (https://www.washoecounty.us/health/files/ehs/waste-management/solid-waste-plan-4.pdf)

APPENDIX A – SOLAR PROJECT PLAN SHEETS

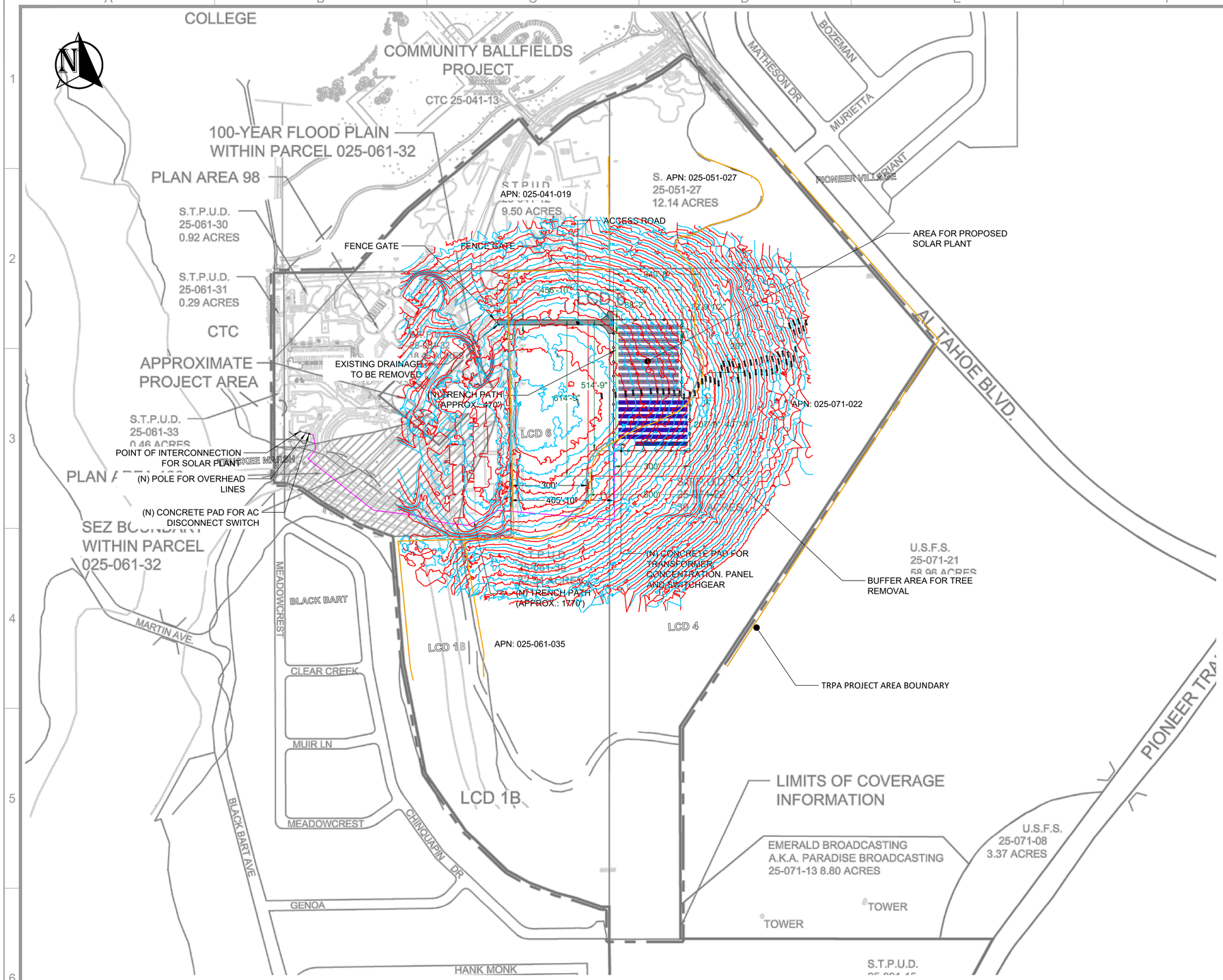

1 SITE PLAN

TRPA PARCEL INFORMATION

PARCEL DESCRIPTION

ANPN NO. 025-061-32, 025-041-12, 025-051-27, 023-071-22
1275 MEADOW CREST DRIVE
SOUTH LAKE TAHOE, CA 96150
SECTION 3, TOWNSHIP 12N, RANGE 18E

PARCEL OWNER

SOUTH LAKE TAHOE PUBLIC UTILITY DIVISION
1275 MEADOW CREST DRIVE
SOUTH LAKE TAHOE, CA 9615

PLAN AREA STATEMENT

BIJOU/AI TAHOE COMMUNITY PLAN	98
TRUCKEE MARSH PLAN AREA STATEMENT	100
BIJOU MEADOWS PLAN AREA STATEMENT	101

PROPOSED COVERAGE INFORMATION

PARCEL AREA SUMMARY

TOTAL PARCEL AREA	4968454 SF
TOTAL ALLOWABLE BASE COVERAGE	1054939 SF
TOTAL EXISTING ON SITE COVERAGE	682468 SF
TOTAL PROPOSED ON SITE COVERAGE	734449 SF
TOTAL REMAINING COVERAGE	320490 SF

LAND CAPABILITY DISTRICT DATA

LAND CAPABILITY DISTRICT 1B

LAND CAPABILITY DISTRICT AREA	784627 SF
ALLOWABLE BASE COVERAGE	7846 SF
EXISTING COVERAGE	20993 SF
PROPOSED COVERAGE	0 SF
TOTAL LCD 1B COVERAGE	20993 SF

LAND CAPABILITY DISTRICT 4

LAND CAPABILITY DISTRICT AREA	2080550 SF
ALLOWABLE BASE COVERAGE	416110 SF
EXISTING COVERAGE	0 SF
PROPOSED COVERAGE	9088 SF
TOTAL LCD 4 COVERAGE	9088 SF

LAND CAPABILITY DISTRICT 6

LAND CAPABILITY DISTRICT AREA	2103277 SF
ALLOWABLE BASE COVERAGE	630983 SF
EXISTING COVERAGE	661475 SF
EXISTING BANKED COVERAGE	6964 SF
REMOVED COVERAGE	0 SF
PROPOSED COVERAGE	42913 SF
REMAINING BANKED COVERAGE	0 SF
TOTAL LCD 6 COVERAGE	704388 SF

LEGEND

- ARRAY TYPE #1
- ARRAY TYPE #2
- ARRAY TYPE #3
- LOW VOLTAGE TRENCH
- MEDIUM VOLTAGE TRENCH

LICENSED SOLAR CONTRACTOR
Staten Solar C-46
Lic: 984910
Exp. 6/30/2023
State of California

NAME OF CUSTOMER: South Tahoe Public Utilities Discrict

TITLE: Site Plan

SUBJECT: 1347.92 kW DC Ground Mount Photovoltaic System, (2324) 580W Trina Solar Modules

PROJECT LOCATION: 1275 Meadow Crest Dr, South Lake Tahoe, CA 96150, USA

Rev #	DATE	REMARKS	DESIGNED	CHECKED	APPROVED
0	11-23-2022	INITIAL SUBMITTAL	NK	PM	SB

THIS DRAWING IS PROPERTY OF STATEN SOLAR CORPORATION AND MAY NOT BE REPRODUCED, PUT INTO EXECUTION OR DISCLOSED TO THIRD PARTY WITHOUT STATEN SOLAR PERMISSION

STATEN
175 Nortech Parkway,
San Jose, CA 95134
statensolar.com
License No. -984910| C-46

DWG NO: E-1.1

PROJ NO: STP-127

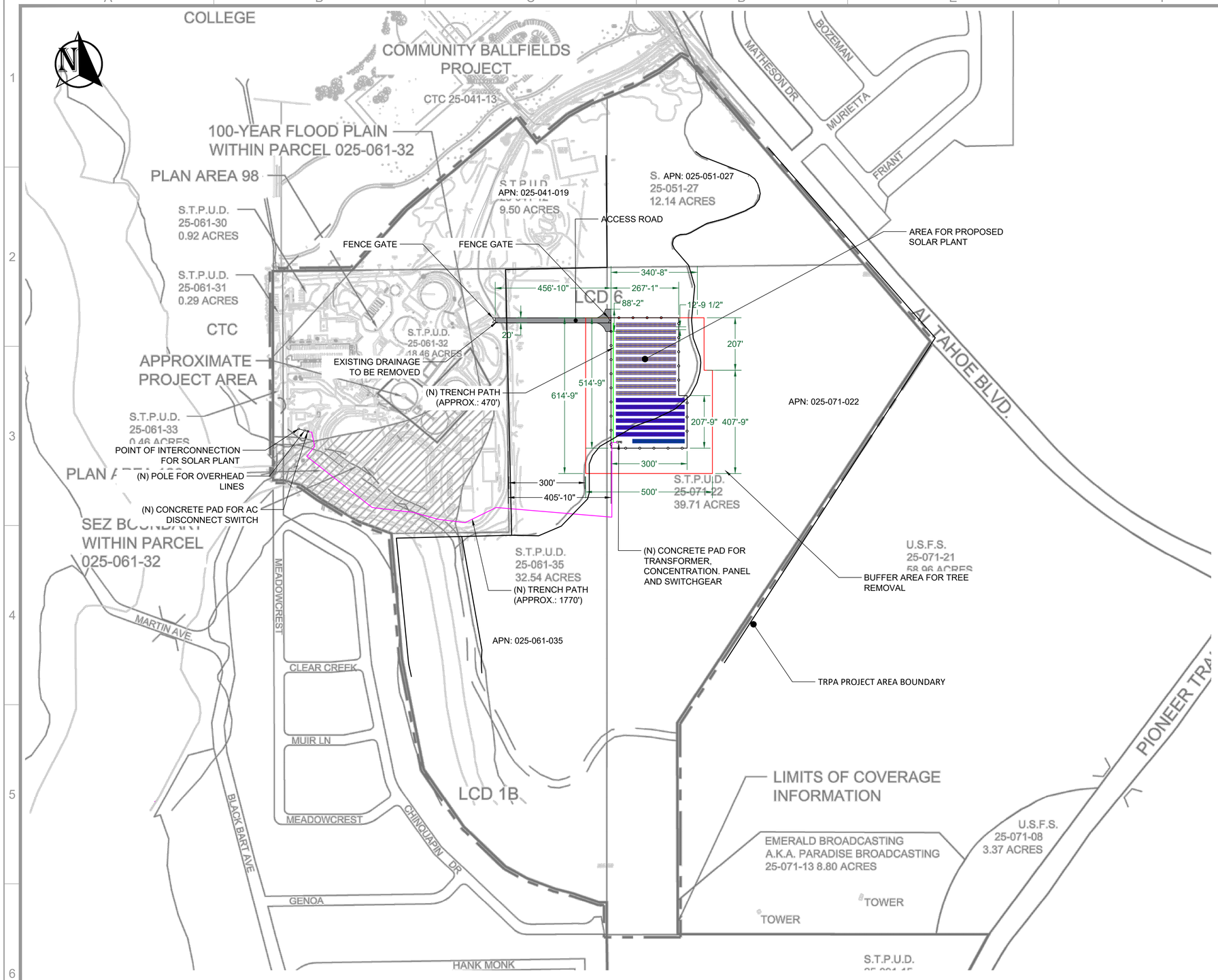

1 SITE PLAN

TRPA PARCEL INFORMATION

PARCEL DESCRIPTION

ANPN NO. 025-061-32, 025-041-12, 025-051-27, 023-071-22
1275 MEADOW CREST DRIVE
SOUTH LAKE TAHOE, CA 96150
SECTION 3, TOWNSHIP 12N, RANGE 18E

PARCEL OWNER

SOUTH LAKE TAHOE PUBLIC UTILITY DIVISION
1275 MEADOW CREST DRIVE
SOUTH LAKE TAHOE, CA 9615

PLAN AREA STATEMENT

BIJOU/AI TAHOE COMMUNITY PLAN	98
TRUCKEE MARSH PLAN AREA STATEMENT	100
BIJOU MEADOWS PLAN AREA STATEMENT	101

PROPOSED COVERAGE INFORMATION

PARCEL AREA SUMMARY

TOTAL PARCEL AREA	4968454 SF
TOTAL ALLOWABLE BASE COVERAGE	1054939 SF
TOTAL EXISTING ON SITE COVERAGE	682468 SF
TOTAL PROPOSED ON SITE COVERAGE	734449 SF
TOTAL REMAINING COVERAGE	320490 SF

LAND CAPABILITY DISTRICT DATA

LAND CAPABILITY DISTRICT 1B

LAND CAPABILITY DISTRICT AREA	784627 SF
ALLOWABLE BASE COVERAGE	7846 SF
EXISTING COVERAGE	20993 SF
PROPOSED COVERAGE	0 SF
TOTAL LCD 1B COVERAGE	20993 SF

LAND CAPABILITY DISTRICT 4

LAND CAPABILITY DISTRICT AREA	2080550 SF
ALLOWABLE BASE COVERAGE	416110 SF
EXISTING COVERAGE	0 SF
PROPOSED COVERAGE	9088 SF
TOTAL LCD 4 COVERAGE	9088 SF

LAND CAPABILITY DISTRICT 6

LAND CAPABILITY DISTRICT AREA	2103277 SF
ALLOWABLE BASE COVERAGE	630983 SF
EXISTING COVERAGE	661475 SF
EXISTING BANKED COVERAGE	6964 SF
REMOVED COVERAGE	0 SF
PROPOSED COVERAGE	42913 SF
REMAINING BANKED COVERAGE	0 SF
TOTAL LCD 6 COVERAGE	704388 SF

LEGEND

ARRAY TYPE #1
ARRAY TYPE #2
ARRAY TYPE #3
LOW VOLTAGE TRENCH
MEDIUM VOLTAGE TRENCH

LICENSED SOLAR CONTRACTOR Staten Solar C-46 Lic: 984910 Exp. 6/30/2023 State of California

NAME OF CUSTOMER: South Tahoe Public Utilities Discrict

TITLE: Site Plan

SUBJECT: 1347.92 kW DC Ground Mount Photovoltaic System, (2324) 580W Trina Solar Modules

PROJECT LOCATION: 1275 Meadow Crest Dr, South Lake Tahoe, CA 96150, USA

Rev #	DATE	REMARKS	DESIGNED	CHECKED	APPROVED
0	11-23-2022	INITIAL SUBMITTAL	NK	PM	SB

THIS DRAWING IS PROPERTY OF STATEN SOLAR CORPORATION AND MAY NOT BE REPRODUCED, RUT INTO EXECUTION OR DISCLOSED TO THIRD PARTY WITHOUT STATEN SOLAR PERMISSION

STATEN
175 Nortech Parkway,
San Jose, CA 95134
statensolar.com
License No. -984910| C-46

DWG NO: E-1.2

PROJ NO: STP-127

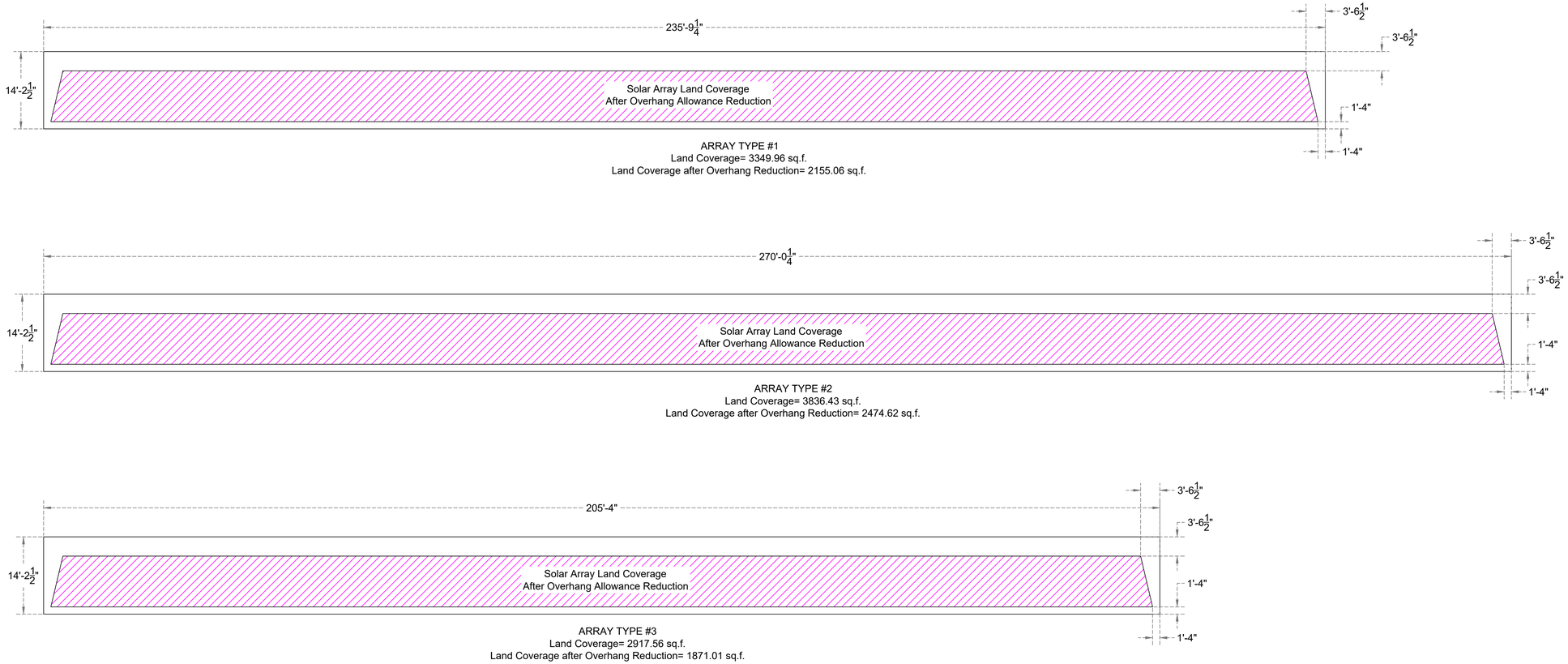

2 LAND COVERAGE OF DIFFERENT ARRAY TYPES

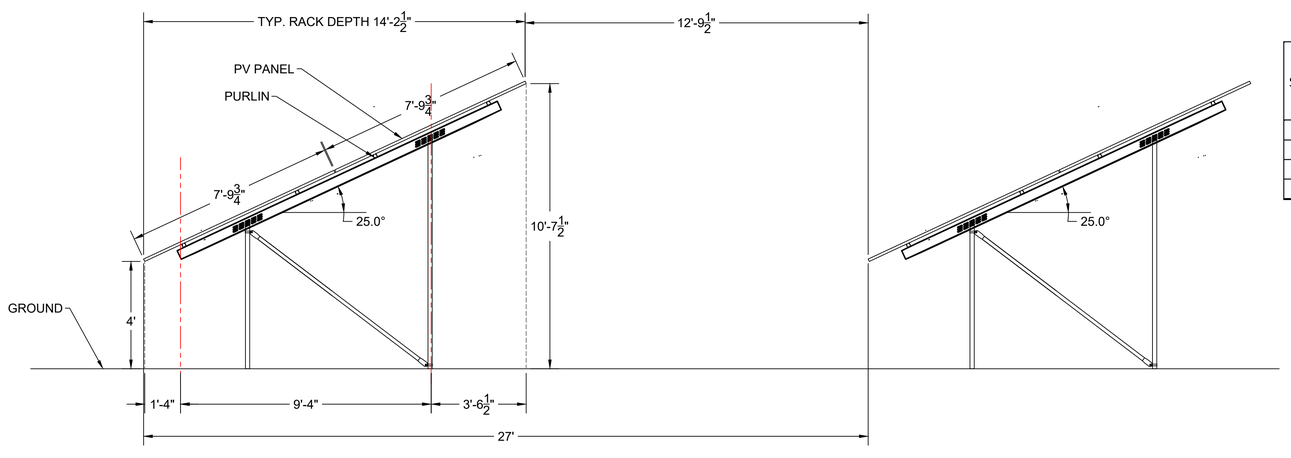

1 ELEVATION VIEW OF RACKING

Scale: 3/8"= 1'-0"

SOLAR ARRAY TYPE	LAND COVERAGE (SQ. F.)	LAND COVERAGE AFTER OVERHANG REDUCTION (SQ. F.)	QUANTITY	SUBTOTAL LAND COVERAGE (SQ. F.)	SUBTOTAL LAND COVERAGE AFTER OVERHANG REDUCTION (SQ. F.)	OVERHANG REDUCTION (%)
1	3349.96	2155.06	11	36849.56	23705.66	35.67%
2	3836.43	2474.62	6	23018.58	14847.72	35.50%
3	2917.56	1871.01	1	2917.56	1871.01	35.87%
TOTAL				62785.7	40424.39	35.68%

New Land Coverage per district (sqf)		
Building type	District	
	LCD 4	LCD 6
Solar Installation	8,893	31,531
Access Road	0	11,016
Concrete Pad for Disconnect Switch	0	20
Concrete Pad for Transformer and Conc. Panel	101	0
Fence concrete foundation	94	346
Total	**9,088**	**42,913**

LICENSED SOLAR CONTRACTOR
Staten Solar, Inc.
Lic: 984910
Exp. 6/30/2023
State of California

NAME OF CUSTOMER: South Tahoe Public Utilities Discrict

TITLE: LAND COVERAGE

SUBJECT: 1347.92 kW DC Ground Mount Photovoltaic System, (2324) 580W Trina Solar Modules

PROJECT LOCATION: 1275 Meadow Crest Dr, South Lake Tahoe, CA 96150, USA

Rev #	DATE	REMARKS	DESIGNED	CHECKED	APPROVED
0	11-23-2022	INITIAL SUBMITTAL	NK	PM	SB

THIS DRAWING IS PROPERTY OF STATEN SOLAR CORPORATION AND MAY NOT BE REPRODUCED, PUT INTO EXECUTION OR DISCLOSED TO THIRD PARTY WITHOUT STATEN SOLAR'S PERMISSION.

STATEN
175 Nortech Parkway,
San Jose, CA 95134
statensolar.com
License No. -984910| C-46

DWG NO: E-2

PROJ NO: STP-127

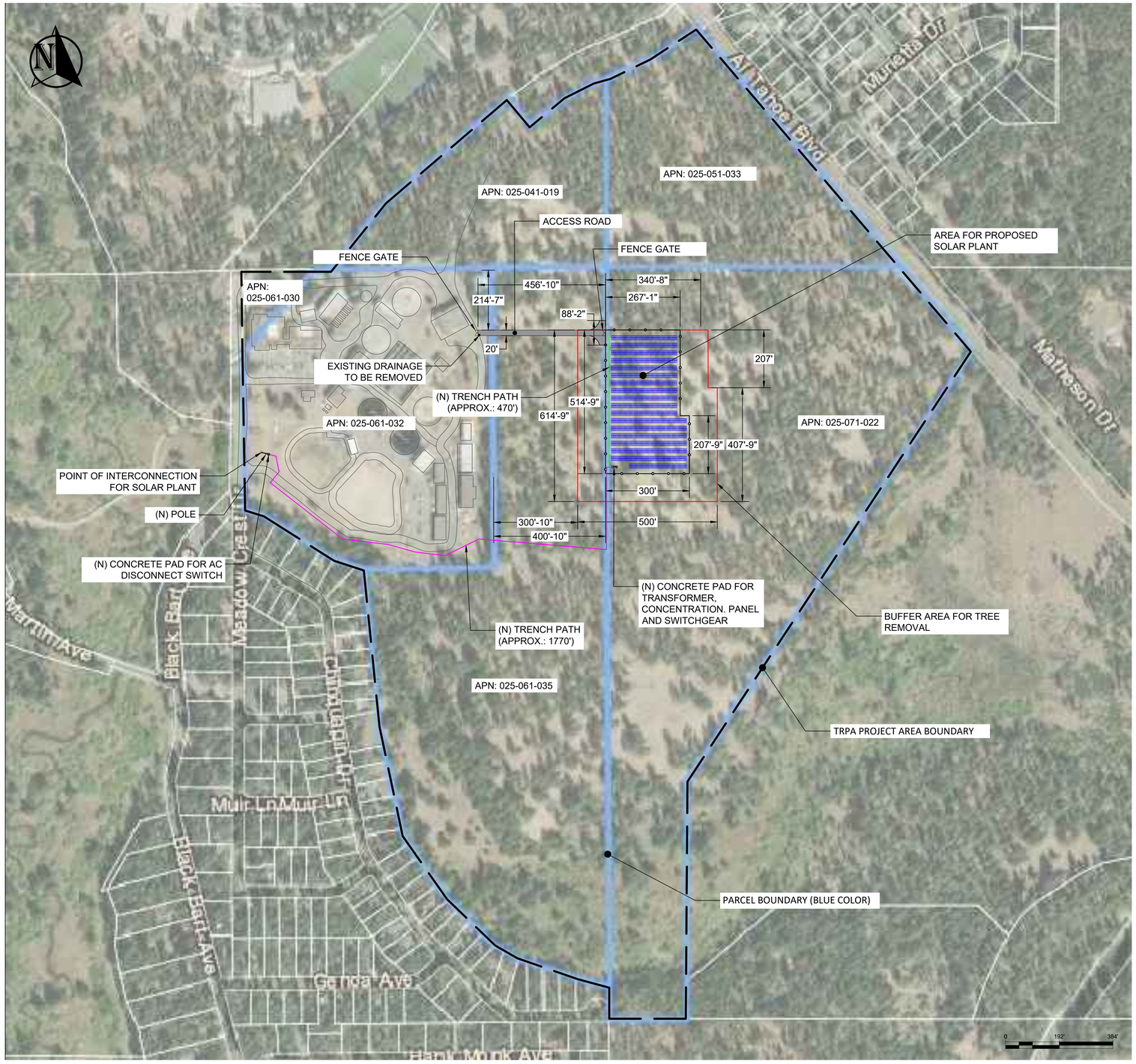

1 SITE PLAN

Scale: 1/192"= 1'-0"

PROPERTY OWNER: SOUTH TAHOE PUBLIC UTILITY DISTRICT

ADDRESS: 1275 MEADOW CREST DR, SOUTH LAKE TAHOE, CA 96150

LEGEND

1. TRPA PROJECT AREA BOUNDARY
2. PARCEL BOUNDARY
3. BUFFER AREA FOR TREE REMOVAL
4. SOLAR ARRAY FENCE
5. LOW VOLTAGE TRENCH
6. MEDIUM VOLTAGE TRENCH

LICENSED SOLAR CONTRACTOR
Staten Solar / C-46
Lic: 984910
Exp. 6/30/2023
State of California

NAME OF CUSTOMER: South Tahoe Public Utilities Discrict

TITLE: Site Plan

SUBJECT: 1347.92 kW DC Ground Mount Photovoltaic System, (2324) 580W Trina Solar Modules

PROJECT LOCATION: 1275 Meadow Crest Dr, South Lake Tahoe, CA 96150, USA

Rev #	DATE	REMARKS	DESIGNED	CHECKED	APPROVED
0	11-23-2022	INITIAL SUBMITTAL	NK	PM	SB

THIS DRAWING IS PROPERTY OF STATEN SOLAR CORPORATION AND MAY NOT BE REPRODUCED, PUT INTO EXECUTION OR DISCLOSED TO THIRD PARTY WITHOUT STATEN SOLAR PERMISSION

STATEN
175 Nortech Parkway,
San Jose, CA 95134
statensolar.com
License No. -984910| C-46

DWG NO: E-1

PROJ NO: STP-127

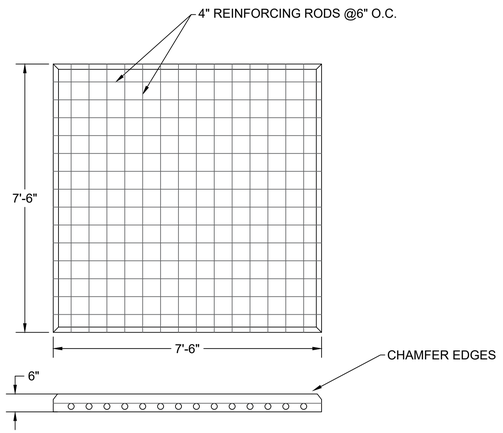

1 CONCRETE PAD DETAILS FOR TRANSFORMERS

Scale: 1/2"= 1'-0"

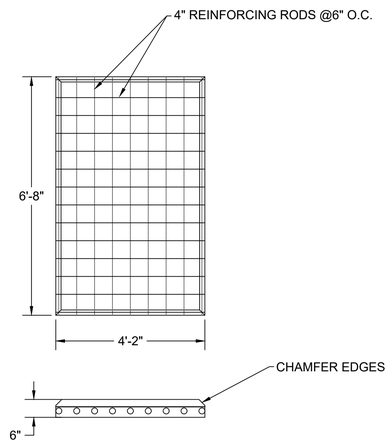

2 CONCRETE PAD DETAILS FOR PANELBOARD

Scale: 1/2"= 1'-0"

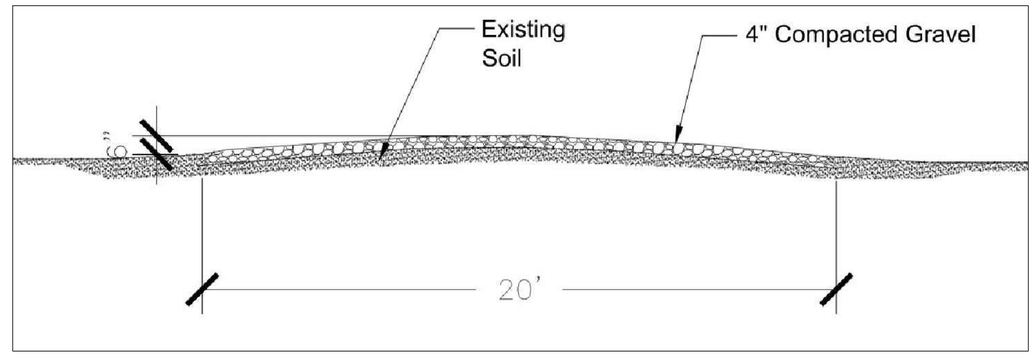

3 PAVED ROAD DETAILS

Scale: NTS

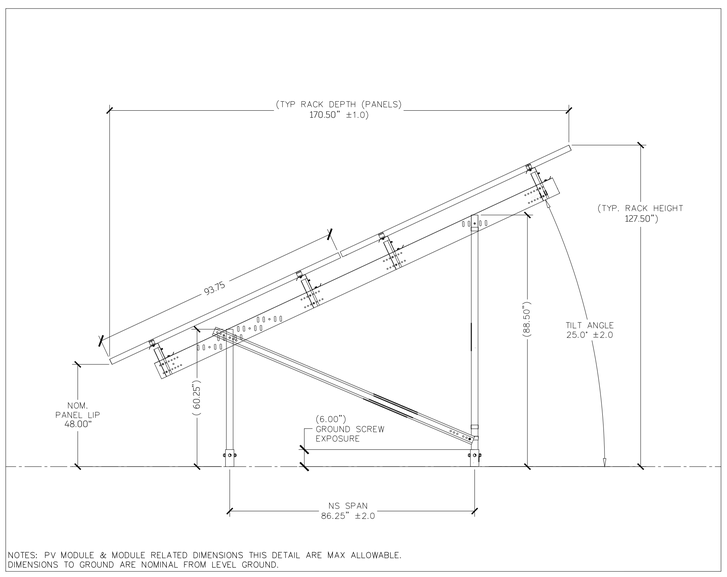

4 ELEVATION VIEW OF RACKING

Scale: 1/2"= 1'-0"

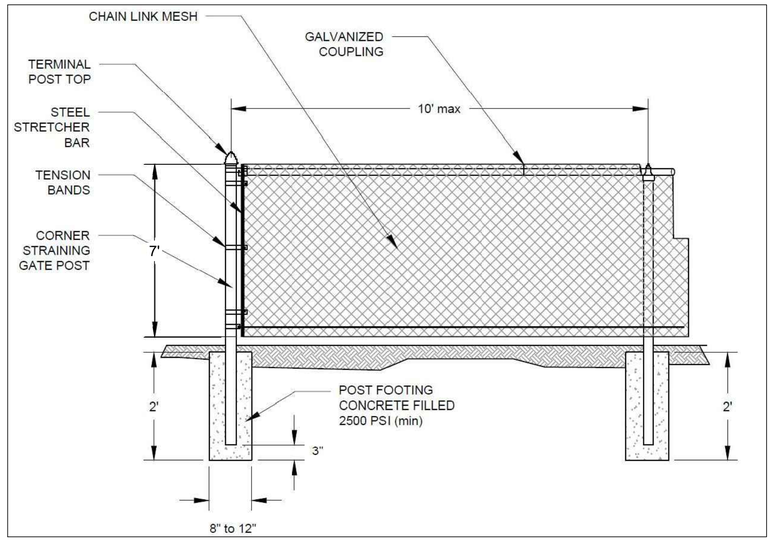

5 TYPICAL FENCE DETAILS

Scale: NTS

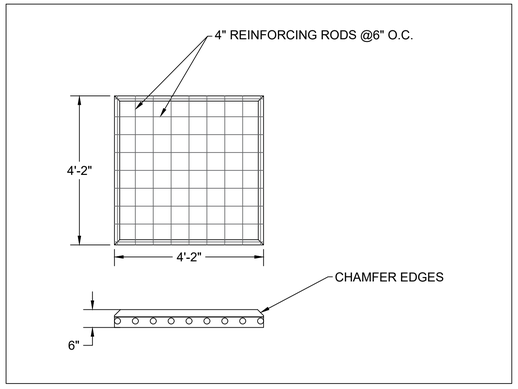

6 CONCRETE PAD DETAILS FOR DISCONNECT SWITCH

Scale: 1/2"= 1'-0"

LICENSED SOLAR CONTRACTOR
Staten Solar
Lic: 984910
C-46
Exp. 6/30/2023
State of California

NAME OF CUSTOMER:	South Tahoe Public Utilities Discrict
TITLE:	Details
SUBJECT:	1347.92 kW DC Ground Mount Photovoltaic System, (2324) 580W Trina Solar Modules
PROJECT LOCATION:	1275 Meadow Crest Dr, South Lake Tahoe, CA 96150, USA

Rev #	DATE	REMARKS	DESIGNED	CHECKED	APPROVED
0	11-23-2022	INITIAL SUBMITTAL	NK	PM	SB

THIS DRAWING IS PROPERTY OF STATEN SOLAR CORPORATION AND MAY NOT BE REPRODUCED, PUT INTO EXECUTION OR DISCLOSED TO THIRD PARTY WITHOUT STATEN SOLAR PERMISSION

STATEN
175 Nortech Parkway,
San Jose, CA 95134
statensolar.com
License No. -984910| C-46

DWG NO: E-1

PROJ NO: STP-127

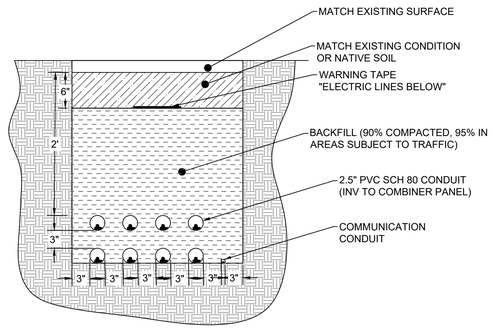

1 TRENCH DETAILS (INV to COMB. PANEL)

Scale: NTS

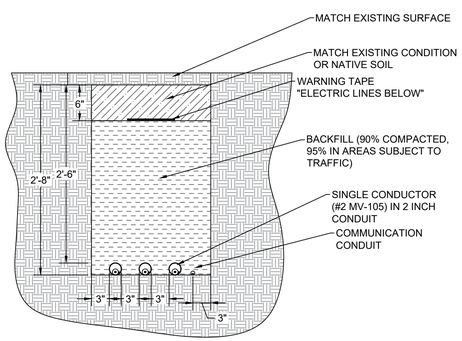

2 TRENCH DETAILS

Scale: NTS

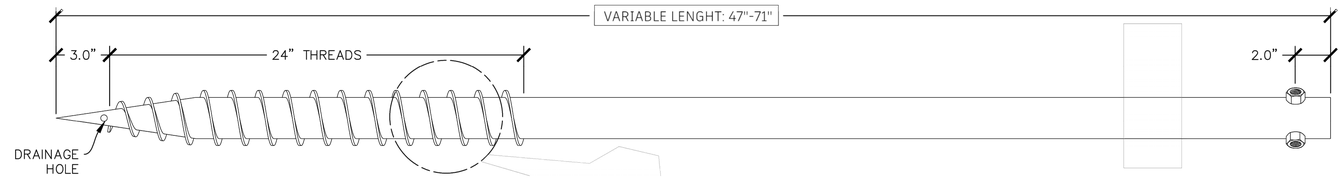

NOTES:
1. VIEW NOT REPRESENTATIVE OF SCREW TIP OR REQUIRED OVERALL OR THREAD LENGTH.

E1 PART: SCREW PILE

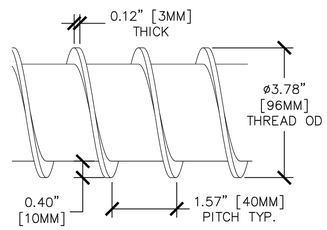

D1 DETAIL: SCREW PILE

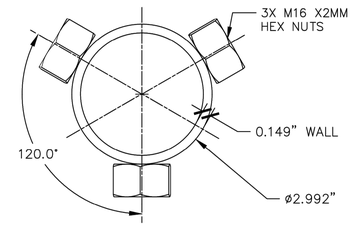

D2 SECTION: SCREW PILE

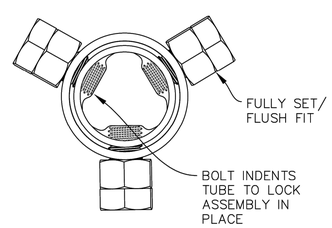

C1 SECTION: PILE ASSEMBLY

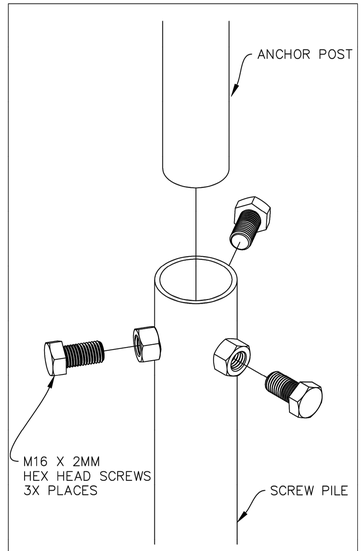

A1 CONNECTION: POST-TO-PILE

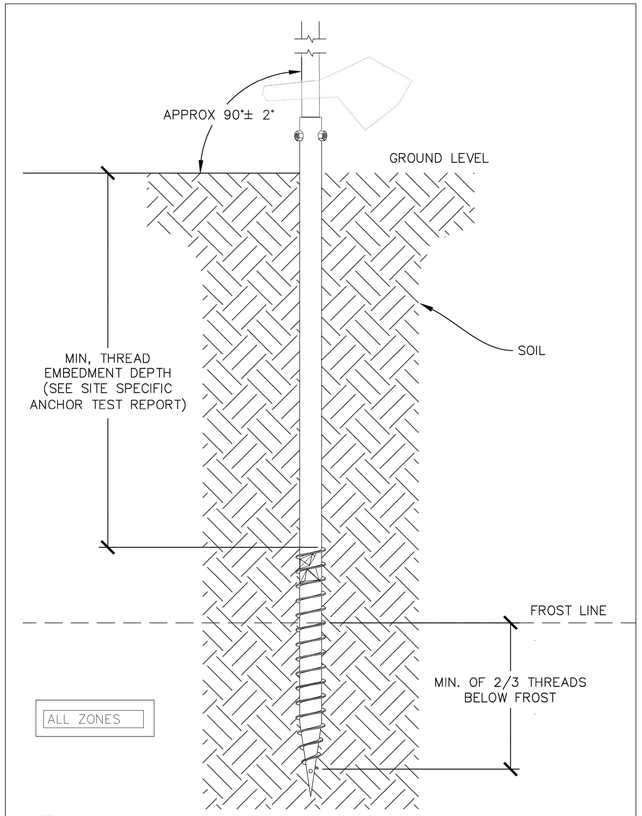

NOTES:
1. LENGTH & THREADS MAY VARY, SEE SHEET NOTES
2. EMBEDMENT DEPTH PER GEOTECHNICAL ENGINEER APPROVED ANCHOR TEST REPORT, NOT BY JDI GROUP.

A2 INSTALL OPTION 2: PILOT HOLE: PROFILE-SOIL CUTAWAY

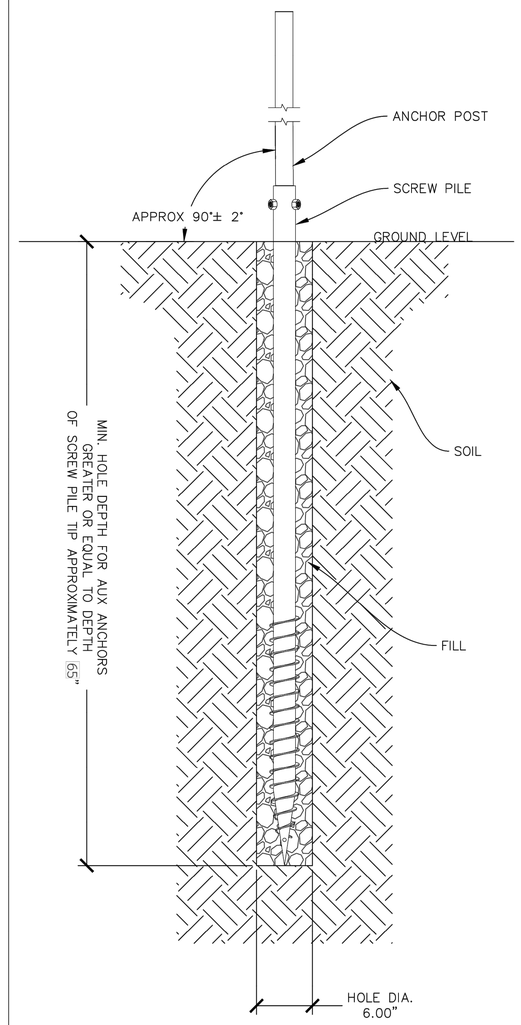

NOTE: EMBEDMENT DEPTH PER GEOTECHNICAL ENGINEER APPROVED ANCHOR TEST REPORT, NOT BY JDI GROUP.

A3 INSTALL OPTION 1: PRE-DRILL: PROFILE-SOIL CUTAWAY

LICENSED SOLAR CONTRACTOR Staten Solar / C-46 Lic: 984910 Exp. 6/30/2023 State of California

South Tahoe Public Utilities Discrict

Details

1347.92 kW DC Ground Mount Photovoltaic System, (2324) 580W Trina Solar Modules
1275 Meadow Crest Dr, South Lake Tahoe, CA 96150, USA

NAME OF CUSTOMER:
TITLE:
SUBJECT:
PROJECT LOCATION:

Rev #	DATE	REMARKS	DESIGNED	CHECKED	APPROVED
0	11-23-2022	INITIAL SUBMITTAL	NK	PM	SB

THIS DRAWING IS PROPERTY OF STATEN SOLAR CORPORATION AND MAY NOT BE REPRODUCED, PUT INTO EXECUTION OR DISCLOSED TO THIRD PARTY WITHOUT STATEN SOLAR PERMISSION

STATEN
175 Nortech Parkway,
San Jose, CA 95134
statensolar.com
License No. -984910| C-46

DWG NO: E-2

PROJ NO: STP-127

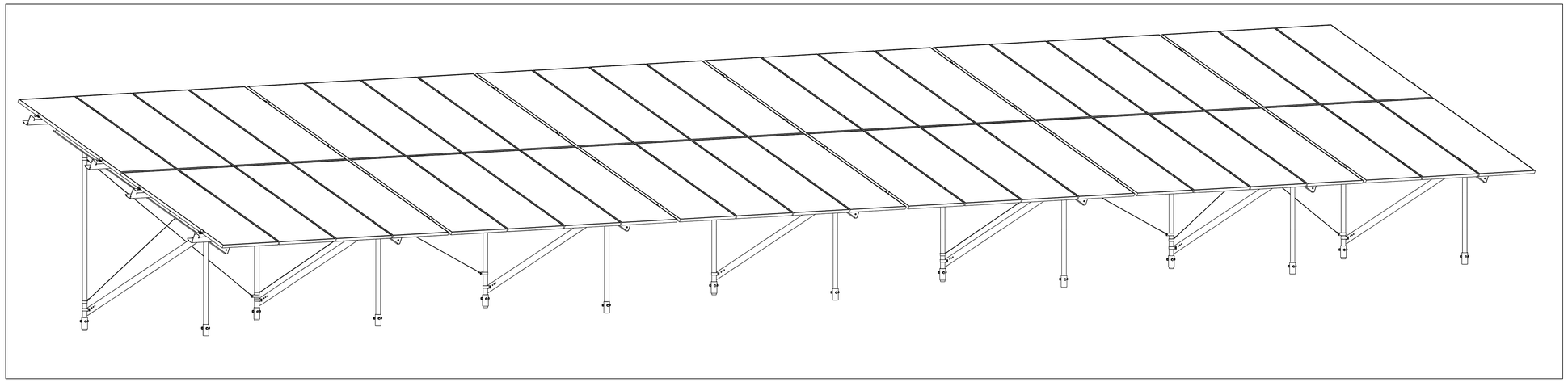

1 3D VIEW

Scale: NTS

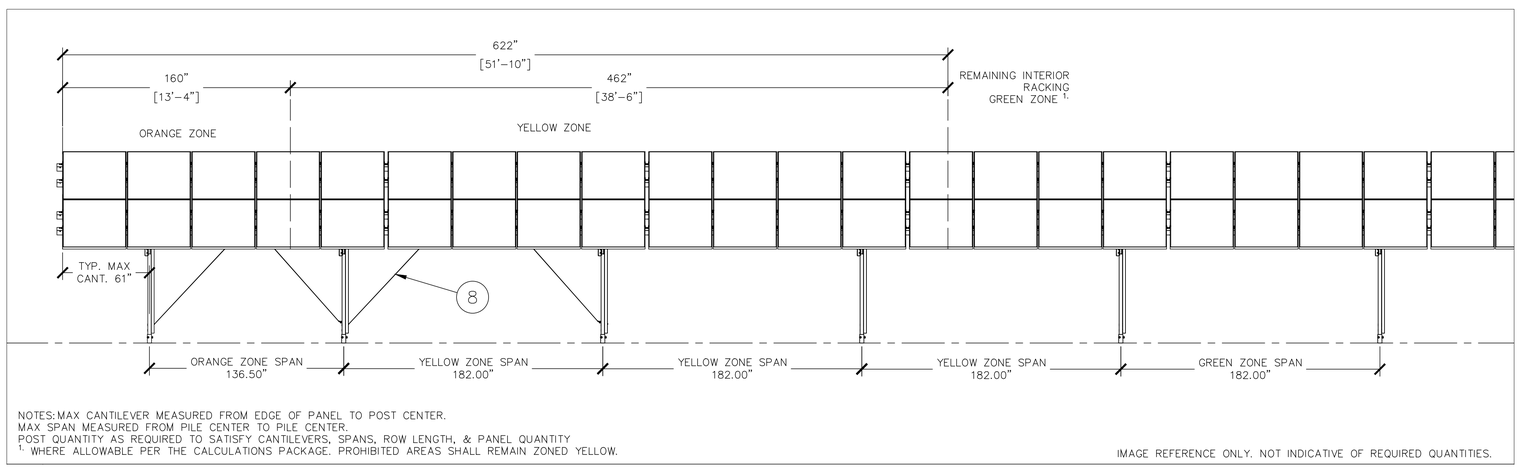

NOTES: MAX CANTILEVER MEASURED FROM EDGE OF PANEL TO POST CENTER.
MAX SPAN MEASURED FROM PILE CENTER TO PILE CENTER.
POST QUANTITY AS REQUIRED TO SATISFY CANTILEVERS, SPANS, ROW LENGTH, & PANEL QUANTITY
1. WHERE ALLOWABLE PER THE CALCULATIONS PACKAGE. PROHIBITED AREAS SHALL REMAIN ZONED YELLOW.

IMAGE REFERENCE ONLY. NOT INDICATIVE OF REQUIRED QUANTITIES.

2 ELEVATION VIEW FROM FRONT (NORTH FACING)

Scale: NTS

LICENSED SOLAR CONTRACTOR
Staten Solar / C-46
Lic: 984910
Exp. 6/30/2023
State of California

NAME OF CUSTOMER: South Tahoe Public Utilities Discrict

TITLE: Details

SUBJECT: 1347.92 kW DC Ground Mount Photovoltaic System, (2324) 580W Trina Solar Modules

PROJECT LOCATION: 1275 Meadow Crest Dr, South Lake Tahoe, CA 96150, USA

Rev #	DATE	REMARKS	DESIGNED	CHECKED	APPROVED
0	11-23-2022	INITIAL SUBMITTAL	NK	PM	SB

THIS DRAWING IS PROPERTY OF STATEN SOLAR CORPORATION AND MAY NOT BE REPRODUCED, PUT INTO DECUTION OR DISCLOSED TO THIRD PARTY WITHOUT STATEN SOLAR PERMISSION

STATEN
175 Nortech Parkway,
San Jose, CA 95134
statensolar.com
License No. -984910| C-46

DWG NO: E-3

PROJ NO: STP-127

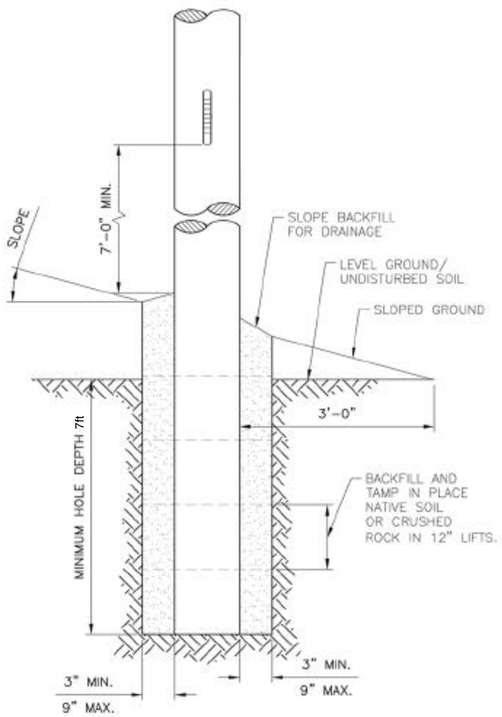

1 (N) UTILITY POLE

Scale: NTS

LICENSED SOLAR CONTRACTOR
Staten Solar / C-46
Lic: 984910
Exp. 6/30/2023
State of California

South Tahoe Public Utilities Discrict

Details

1347.92 kW DC Ground Mount Photovoltaic System, (2324) 580W Trina Solar Modules

1275 Meadow Crest Dr, South Lake Tahoe, CA 96150, USA

NAME OF CUSTOMER:
TITLE:
SUBJECT:
PROJECT LOCATION:

Rev #	DATE	REMARKS	DESIGNED	CHECKED	APPROVED
0	11-23-2022	INITIAL SUBMITTAL	NK	PM	SB

THIS DRAWING IS PROPERTY OF STATEN SOLAR CORPORATION AND MAY NOT BE REPRODUCED, PUT INTO EXECUTION OR DISCLOSED TO THIRD PARTY WITHOUT STATEN SOLAR PERMISSION.

STATEN
175 Nortech Parkway,
San Jose, CA 95134
statensolar.com
License No. -984910| C-46

DWG NO: E-4

PROJ NO: STP-127

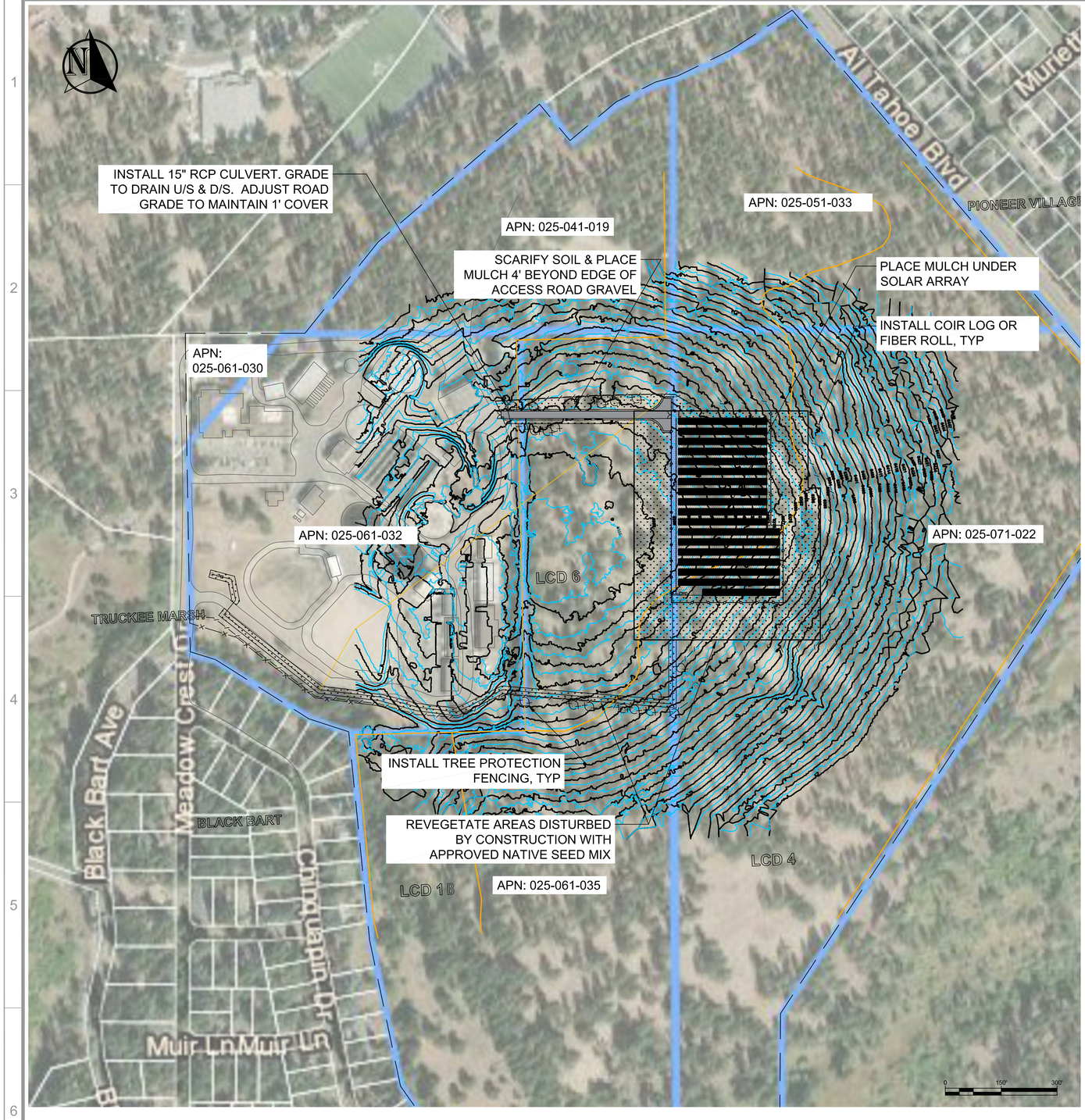

1 BMP PLAN & DETAILS

Scale: 1" = 150'

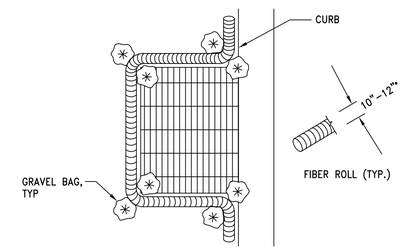

NOTES:

1. PROTECT FLOWLINE AROUND DI OR ANCHOR ACROSS TRENCH AS IN FIBER ROLL DETAIL.
2. STAKE OR ANCHOR W/GRAVEL BAGS IN PLACE.
3. INSTALL FILTER FABRIC UNDER CATCH BASIN GRATE DURING CONSTRUCTION. REPLACE FILTER FABRIC WEEKLY.

FIBER ROLL DI PROTECTION

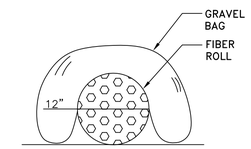

WEIGHTED FIBER ROLL

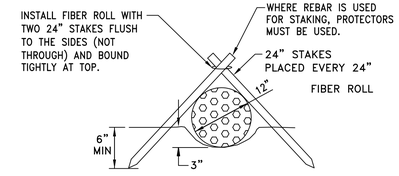

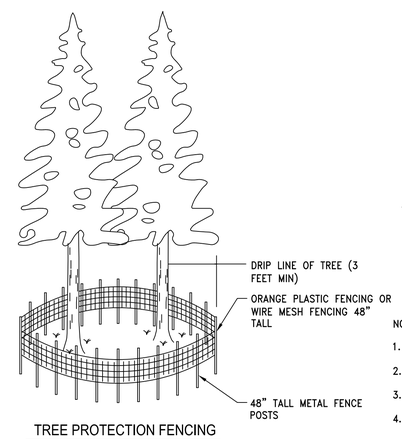

TREE PROTECTION FENCING

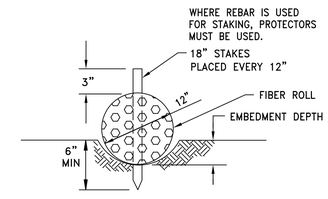

STAKED FIBER ROLL

NOTES:

1. FOR STAKED FIBER ROLL, EMBEDMENT DEPTH TO BE D/3 OR PER MFG RECOMMENDATIONS.
2. WEIGHTED FIBER ROLL TO BE USED IN LOCATIONS WHERE EMBEDMENT IS NOT POSSIBLE.
3. CONTRACTOR TO INSTALL FIBER ROLL ADJACENT TO WATER LINE EXCAVATION TO PREVENT DISCHARGE OF SEDIMENT TO STORM DRAIN.
4. GRAVEL BAG FOR WEIGHTED FIBER ROLL TO BE FILLED WITH CLEAN WASHED 3/4" DRAIN ROCK.

TEMPORARY CONTROLS

SCALE: N.T.S.

PRELIMINARY
FOR REVIEW
NOT FOR CONSTRUCTION
DATE: 08-01-2023

USA NORTH 811
Call 811 Before You Dig

REGISTERED PROFESSIONAL ENGINEER
JENNIFER G. ROSSI
No. 54137
Exp. 12-31-23
CIVIL
STATE OF CALIFORNIA
08/01/23

South Tahoe Public Utilities Discrict

BMP Plan

1347.92 kW DC Ground Mount Photovoltaic System, (2324) 580W Trina Solar Modules
1275 Meadow Crest Dr, South Lake Tahoe, CA 96150, USA

NAME OF CUSTOMER:
TITLE:
SUBJECT:
PROJECT LOCATION:

Rev #	DATE	REMARKS	DESIGNED	CHECKED	APPROVED
0	07-31-2023	INITIAL SUBMITTAL	JGR	JGR	JGR

THIS DRAWING IS PROPERTY OF STATEN SOLAR CORPORATION AND MAY NOT BE REPRODUCED, PUT INTO DIRECTION OR DISCLOSED TO THIRD PARTY WITHOUT STATEN SOLAR PERMISSION

EASTERN SIERRA ENGINEERING
328 DOPLA CT. SUITE 201
ZEPHYR COVE, NV 89448
MAIN: (775) 588-7178
FAX: (775) 588-7326

DWG NO: BMP-1

PROJ NO: 23219-4