DRAFT
ENVIRONMENTAL IMPACT REPORT

FOR THE

5175 VINCENT AVENUE PROJECT
(SCH #: 2018121056)

FEBRUARY 2021

Prepared for:

City of Irwindale
Community Development Department
Planning Division
5050 North Irwindale Avenue
Irwindale, CA 91706

Prepared by:

De Novo Planning Group
1020 Suncast Lane, Suite 106
El Dorado Hills, CA 95762
(916) 580-9818

De Novo Planning Group

A Land Use Planning, Design, and Environmental Firm

DRAFT
ENVIRONMENTAL IMPACT REPORT

FOR THE

5175 VINCENT AVENUE PROJECT
(SCH #: 2018121056)

FEBRUARY 2021

Prepared for:

City of Irwindale
Community Development Department
Planning Division
5050 North Irwindale Avenue
Irwindale, CA 91706

Prepared by:

De Novo Planning Group
1020 Suncast Lane, Suite 106
El Dorado Hills, CA 95762
(916) 580-9818

DRAFT EIR

Chapters **Page Numbers**

Executive Summary ES-1

1.0 Introduction 1.0-1

1.1 Purpose and Intended Uses of the EIR 1.0-1
1.2 Type of EIR 1.0-1
1.3 Known Responsible and Trustee Agencies 1.0-1
1.4 Environmental Review Process 1.0-2
1.5 Organization and Scope 1.0-3
1.6 Comments Received on the Notice of Preparation 1.0-5

2.0 Project Description 2.0-1

2.1 Project Location and Setting 2.0-1
2.2 Historical Background 2.0-1
2.3 Public Outreach 2.0-4
2.4 Project Description 2.0-5
2.5 Project Goals and Objectives 2.0-9
2.6 Uses of the EIR and Required Agency Approvals 2.0-10

3.1 Aesthetics and Visual Resources 3.1-1

3.1.1 Environmental Setting 3.1-1
3.1.2 Regulatory Setting 3.1-3
3.1.3 Impacts and Mitigation Measures 3.1-5

3.2 Air Quality 3.2-1

3.2.1 Environmental Setting 3.2-1
3.2.2 Regulatory Setting 3.2-10
3.2.3 Impacts and Mitigation Measures 3.2-18

3.3 Geology and Soils 3.3-1

3.3.1 Environmental Setting 3.3-1
3.3.2 Regulatory Setting 3.3-9
3.3.3 Impacts and Mitigation Measures 3.3-13

3.4 Greenhouse Gases, Climate Change and Energy 3.4-1

3.4.1 Environmental Setting 3.4-1

3.4.2 Regulatory Setting....3.4-6
3.4.3 Impacts and Mitigation Measures....3.4-26

3.5 Hazards and Hazardous Materials....3.5-1
3.5.1 Environmental Setting....3.5-1
3.5.2 Regulatory Setting....3.5-10
3.5.3 Impacts and Mitigation Measures....3.5-14

3.6 Hydrology and Water Quality....3.6-1
3.6.1 Environmental Setting....3.6-1
3.6.2 Regulatory Setting....3.6-11
3.6.3 Impacts and Mitigation Measures....3.6-18

3.7 Noise....3.7-1
3.7.1 Environmental Setting....3.7-1
3.7.2 Regulatory Setting....3.7-7
3.7.3 Impacts and Mitigation Measures....3.7-10

3.8 Transportation and Circulation....3.8-1
3.8.1 Environmental Setting....3.8-1
3.8.2 Analysis Methods....3.8-2
3.8.3 Regulatory Setting....3.8-6
3.8.4 Impacts and Mitigation Measures....3.8-7

4.0 Other CEQA-Required Topics....4.0-1
4.1 Cumulative Setting and Impact Analysis....4.0-1
4.2 Significant Irreversible Effects....4.0-14
4.3 Growth-Inducing Impacts....4.0-15
4.4 Significant and Unavoidable Impacts....4.0-15

5.0 Alternatives to the Proposed Project....5.0-1
5.1 CEQA Requirements....5.0-1
5.2 Alternatives Considered in this EIR....5.0-3
5.3 Environmental Analysis....5.0-4

6.0 Report Preparers....6.0-1

7.0 References....7.0-1

Tables **Page Numbers**

Table ES-1: Comparison Summary of Alternatives to the Proposed Project ES-3
Table ES-2: Project Impacts and Proposed Mitigation Measures ES-5
Table 3.2-1: Federal and State Ambient Air Quality Standards 3.2-7
Table 3.2-2: State and National Attainment Status 3.2-8
Table 3.2-3 Ambient Air Quality Monitoring Data (Azusa) 3.2-9
Table 3.2-4: Local Significance Thresholds (LSTs) 3.2-20
Table 3.2-5: Operational Project Generated Emissions at Full Buildout 3.2-28
Table 3.2-6: Operational-Related Emissions Attributable to Project Buildout (LST Analysis) 3.2-31
Table 3.2-7: Construction-Related Project Generated Emissions (pounds/day) (Mitigated) .. 3.2-34
Table 3.2-8: Equipment-Specific Grading Rates 3.2-35
Table 3.2-9: Construction-Related Emissions Attributable to Project Buildout (LST Analysis) 3.2-36
Table 3.2-10: CARB Minimum Separation Recommendations on Siting Sensitive Land Uses 3.2-40
Table 3.2-11: Summary of Maximum Health Risks 3.2-40
Table 3.3-1: Project Site Soils 3.3-3
Table 3.3-2: Modified Mercalli Intensity Scale for Earthquakes 3.3-6
Table 3.4-1: Construction GHG Emissions (Unmitigated Average MT CO_2e/year) 3.4-28
Table 3.4-2: Operational GHG Emissions at Buildout (Metric Tons/Year) 3.4-28
Table 3.4-3: Consistency with SCAG's RTP/SCS Goals 3.4-31
Table 3.4-4: Natural Gas Use and GHG Emissions 3.4-34
Table 3.4-5: Electricity Use and GHG Emissions 3.4-34
Table 3.4-6: On-Road Mobile Fuel Generated by Project Construction Activities – By Phase 3.4-35
Table 3.5-1: EPA TRI Facilities Within the City of Irwindale 3.5-5
Table 3.5-2: GeoTracker Hazardous Material Release Sites Within 0.5 Miles of Project Site ... 3.5-5
Table 3.5-3: GeoTracker Hazardous Material Release Sites Within 1.0 Mile of Project Site 3.5-8
Table 3.6-1: State of California Watershed Hierarchy Naming Convention 3.6-4
Table 3.6-2: ALW Groundwater Wells 3.6-8
Table 3.6-3: Groundwater Production (Total All Wells) 3.6-8
Table 3.6-4: ALW's Water Supply Summary 3.6-8
Table 3.7-1: Typical Noise Levels 3.7-3
Table 3.7-2: Summary of Existing Background Noise Measurement Data 3.7-5
Table 3.7-3: Existing Traffic Noise Levels and Distances to Contours 3.7-6
Table 3.7-4: City of Irwindale Ambient Base Noise Levels 3.7-8
Table 3.7-5: Effects of Vibration on People and Buildings 3.7-10
Table 3.7-6: Significance of Changes in Noise Exposure 3.7-11

Table 3.7-7: Existing and Existing Plus Project Traffic Noise Levels 3.7-12
Table 3.7-8: Baseline and Baseline Plus Project Traffic Noise Levels 3.7-13
Table 3.7-9: Cumulative and Cumulative Plus Project Traffic Noise Levels 3.7-13
Table 3.7-10: Construction Equipment Noise Levels for Primary Construction Phases 3.7-17
Table 3.7-11: Vibration Levels for Various Construction Equipment 3.7-19
Table 3.8-1: City of Irwindale VMT Thresholds of Significance 3.8-2
Table 4.0-1: Estimated Population Growth Projections 4.0-2
Table 5.0-1: Multiple Building Alternative 5.0-4
Table 5.0-2: Comparison of Alternative Project Impacts to the Proposed Project 5.0-21

Figures

Note: Figures are located at the end of the chapters.

Figure 2.0-1 Regional Location Map
Figure 2.0-2 Project Vicinity
Figure 2.0-3 Aerial View of Project Site
Figure 2.0-4 Assessor's Parcel Map
Figure 2.0-5 Site Plan
Figure 2.0-6 Existing and Proposed General Plan Land Use Map
Figure 2.0-7 Existing and Proposed Zoning Designations
Figure 3.1-1a Visual Simulations – From Vincent Avenue NW
Figure 3.1-1b Visual Simulations – From Vincent Avenue SW
Figure 3.1-1c Visual Simulations – From Allen Drive W
Figure 3.3-1 Project Site Soils
Figure 3.3-2 Earthquake Fault Map
Figure 3.6-1 Principal Watershed
Figure 3.6-2 FEMA Flood Insurance Rate Map
Figure 3.6-3 Dam Inundation Map
Figure 3.7-1 Noise Measurement Sites
Figure 3.7-2 Predicted Project Noise Contours (dBA L_{eq}) – Proposed Site Layout
Figure 3.7-3 Predicted Project Noise Contours (dBA L_{dn}) – Proposed Site Layout
Figure 3.7-4 Predicted Construction Noise Contours (dBA L_{eq})
Figure 3.8-1 Existing Pedestrian Facilities
Figure 3.8-2 City of Irwindale Bicycle Master Plan
Figure 3.8-3 Transit Service Map
Figure 5.0-1 Multiple Building Alternative

Figure 5.0-2a Visual Simulations – From Vincent Avenue NW

Figure 5.0-2b Visual Simulations – From Vincent Avenue SW

Figure 5.0-2c Visual Simulations – From Allen Drive W

Figure 5.0-3 Predicted Project Noise Contours (dBA L_{eq}) – Alternate Site Layout

Figure 5.0-4 Predicted Project Noise Contours (dBA L_{dn}) – Alternate Site Layout

Appendices

Appendix A: Initial Study, Notice of Preparation, and NOP Comments

Appendix B: Air Quality, Greenhouse Gas, and Energy Appendices

Appendix B.1: Analysis of Models and Tools for Correlating Project-Generated Emissions to Health End Points

Appendix B.2: CalEEMod Modeling Results

Appendix B.3: Energy Consumption Estimates

Appendix B.4: Air Toxics Health Risk Assessment

Appendix C: Noise Data

Appendix D: Traffic Impact Analysis

This page left intentionally blank.

INTRODUCTION

The City of Irwindale has determined that the 5175 Vincent Avenue Project is a "Project" within the definition of the California Environmental Quality Act (CEQA). CEQA requires the preparation of an environmental impact report (EIR) prior to approving any project, which may have a significant impact on the environment. For the purposes of CEQA, the term "Project" refers to the whole of an action, which has the potential for resulting in a direct physical change or a reasonably foreseeable indirect physical change in the environment (CEQA Guidelines Section 15378[a]).

The EIR contains a description of the Project, description of the environmental setting, identification of Project impacts, and mitigation measures for impacts found to be significant, as well as an analysis of Project alternatives, identification of significant irreversible environmental changes, growth-inducing impacts, and cumulative impacts. This EIR identifies issues determined to have no impact or a less than significant impact, and provides detailed analysis of potentially significant and significant impacts. Comments received in response to the Notice of Preparation (NOP) were considered in preparing the analysis in this EIR.

PROJECT DESCRIPTION

The proposed Project is the development of 26.05 acres of land that was formerly used as a mining pit (Manning Pit) dating back to the 1930s. The proposed Project includes development of a 545,735 square feet (sf) industrial warehouse building. The building would be a concrete tilt-up. Approximately 540,447 sf would be ground floor area and 5,000 sf would be mezzanine area. The proposed site plan is shown on Figure 2.0-5. A reclamation process for the mine was completed and a closure report was approved by the City Council in January 2019 allowing for the development of the site for new development.

The City of Irwindale General Plan specifically addresses development of the Manning Pit, a portion of which is the Project site. The General Plan notes that the City owned the northern portion of the pit, which contains two parcels: 8417-034-015 and 8417-034-016. The western parcel on the former Manning Pit (8417-034-912) is approximately 10 acres and is designated Residential, which is not part of the Project development. The eastern parcels comprise the Project site, and contain 19.12 acres of Industrial/Business Park and 6.93 acre of Residential. The entire 26.05 acres is zoned M-2 “Heavy Manufacturing.” This inconsistency between the General Plan land use designation and the zoning is associated with the 6.93 acres of Residential land use where the designation doesn’t align with the parcel boundary. The inconsistency between the General Plan and the zoning requires an amendment to bring the allowed uses/zoning into consistency before the Project could be developed in a way that meets the Project objectives.

The City has received an application to change the 6.93-acre portion of the parcel from "Residential" to "Industrial/Business Park," which is consistent with the land use on the balance of the parcel. In addition to the General Plan Amendment, a Site Plan and Design Review application and Lot Line Adjustment are under concurrent review. A combination of the development and legislative applications and combining of the lots involves the development of the two (2) parcels as a single

use industrial Project. This amendment would make the entire parcel a single use. The parcel to the west of the subject property would remain designated Residential.

The Industrial/Business Park General Plan land use designation allows for a variety of uses including: light industry, heavy industry, distribution, or commercial uses. The proposed Project, however, is an industrial warehouse building, which is specifically allowed under the Industrial/Business Park land use and the M-2 "Heavy Manufacturing" zoning.

Using the maximum floor-area-ratio (FAR) for the Industrial/Business Park designation (1.0:1.0), the development of the site would allow for the construction of 1,134,738 sf of industrial uses, 832,867 sf of which is located on the 19.12 acres that is currently designated Industrial/Business Park under the existing General Plan land use. The application received by the City of Irwindale does not propose a building anywhere close to the maximum FAR for the Project site. Instead, the application submitted to the City includes an industrial warehouse building totaling 545,735 sf, which is approximately 48% of the maximum FAR allowed for this General Plan land use.

See Chapter 2.0, Project Description, for the complete description.

AREAS OF CONTROVERSY AND ISSUES TO BE RESOLVED

This Draft EIR addresses environmental impacts associated with the proposed Project that are known to the City of Irwindale, were raised during the NOP process, or raised during preparation of the Draft EIR. This Draft EIR discusses potentially significant impacts associated with aesthetics, air quality, geology and soils, greenhouse gas emissions, climate change and energy, hazards and hazardous materials, hydrology and water quality, noise, transportation and circulation.

Public review of the Initial Study and NOP documents occurred from February 10, 2020 through March 11, 2020. The City of Irwindale received written comment letters on the NOP for the proposed Project. A copy the letters are provided in Appendix A of this Draft EIR. During the public review period, twelve comment letters provided. No written or verbal comments were provided at that scoping meeting.

- California Department of Transportation;
- California Air Resource Board;
- California Department of Fish and Wildlife;
- County Sanitation District of Los Angeles County;
- Gabrieleño Band of Mission Indians (Kizh Nation);
- South Coast Air Quality Management District;
- Veronica Vanmarcke;
- Edward and Margaret Curren;
- James Trenkamp and Charlotte Santos.

ALTERNATIVES TO THE PROPOSED PROJECT

The CEQA Guidelines require an EIR to describe a reasonable range of alternatives to the Project or to the location of the Project which would reduce or avoid significant impacts, and which could

feasibly accomplish the basic objectives of the proposed Project. Three alternatives to the proposed Project were developed based on input from City staff, the public during the NOP review period, and the technical analysis performed to identify the environmental effects of the proposed Project. The alternatives analyzed in this EIR include the following three alternatives in addition to the proposed Project.

- **No Project (No Build) Alternative**: Under this alternative, development of the Project site would not occur, and the Project site would remain in its current existing condition.
- **Multiple Building Alternative:** Under this alternative, the proposed Project would be developed with the same type of use as described in the Project Description, but the warehouse building would be split into three smaller warehouse buildings.
- **Maximum FAR Alternative:** Under this alternative, the proposed Project would be developed using the maximum floor-area-ratio (FAR).

Alternatives are described in detail in Chapter 5. Table ES-1 presents a comparison of the alternative Project impacts with those of the proposed Project. As shown in the table, the No Project (No Build) Alternative is the environmentally superior alternative. However, as required by CEQA, when the No Project (No Build) Alternative is the environmentally superior alternative, the environmentally superior alternative among the others must be identified. Therefore, the Multiple Building Alternative would be the next environmentally superior alternative because this alternative would reduce impacts related to noise and transportation. However, the Multiple Building Alternative would not fully meet all of the Project objectives.

TABLE ES-1: COMPARISON OF ALTERNATIVE PROJECT IMPACTS TO THE PROPOSED PROJECT

ENVIRONMENTAL ISSUE	*NO PROJECT (NO BUILD) ALTERNATIVE*	*MULTIPLE BUILDING ALTERNATIVE*	*MAXIMUM FAR ALTERNATIVE*
Aesthetics and Visual Resources	Less (Best)	Greater (2nd Best)	Greater (3rd Best)
Air Quality	Less (Best)	Equal (2nd Best)	Greater (3rd Best)
Geology and Soils	Less (Best)	Equal (2nd Best)	Equal (3rd Best)
Greenhouse Gases, Climate Change and Energy	Less (Best)	Equal (2nd Best)	Greater (3rd Best)
Hazards and Hazardous Materials	Less (Best)	Equal (2nd Best)	Equal (3rd Best)
Hydrology and Water Quality	Less (Best)	Equal (2nd Best)	Equal (3rd Best)
Noise	Less (Best)	Less (2nd Best)	Greater (3rd Best)
Transportation and Circulation	Less (Best)	Less (2nd Best)	Greater (3rd Best)

GREATER = GREATER IMPACT THAN THAT OF THE PROPOSED PROJECT
LESS = LESS IMPACT THAN THAT OF THE PROPOSED PROJECT
EQUAL = NO SUBSTANTIAL CHANGE IN IMPACT FROM THAT OF THE PROPOSED PROJECT

SUMMARY OF IMPACTS AND MITIGATION MEASURES

In accordance with the CEQA Guidelines, this EIR focuses on the significant effects on the environment. The CEQA Guidelines defines a significant effect as a substantial adverse change in the physical conditions which exist in the area affected by the proposed Project. A less than significant effect is one in which there is no long or short-term significant adverse change in environmental conditions. Some impacts are reduced to a less than significant level with the implementation of mitigation measures and/or compliance with regulations.

The environmental impacts of the proposed Project, the impact level of significance prior to mitigation, the proposed mitigation measures and/or adopted policies and standard measures that are already in place to mitigate an impact, and the impact level of significance after mitigation are summarized in Table ES-2.

TABLE ES-2: PROJECT IMPACTS AND PROPOSED MITIGATION MEASURES

ENVIRONMENTAL IMPACT	*LEVEL OF SIGNIFICANCE WITHOUT MITIGATION*	*MITIGATION MEASURE*	*RESULTING LEVEL OF SIGNIFICANCE*
AESTHETICS AND VISUAL RESOURCES			
Impact 3.1-1: Project implementation would not result in substantial adverse effects on a scenic vista.	LS	*None required.*	--
Impact 3.1-2: Project implementation would not conflict with an applicable zoning or other regulation governing scenic quality within an urbanized area.	LS	*None required.*	--
Impact 3.1-3: Project implementation may result in light and glare impacts.	PS	***Mitigation Measure 3.1-1:*** *A lighting plan for the Project shall be prepared prior to the approval of the Site Plan review for each phase. The lighting plan shall demonstrate that the lighting systems and other exterior lighting throughout the Project site has been designed to minimize light spillage onto adjacent properties to the greatest extent feasible, consistent with the Site Plan and Design Review requirements established in Chapter 17.70 of the City's Municipal Code.*	LS
AIR QUALITY			
Impact 3.2-1: The Project has the potential to conflict with or obstruct implementation of the applicable air quality plan.	SU	*Implement* ***Mitigation Measures 3.2-1 and 3.1-2***	SU
Impact 3.2-2: Proposed Project operation has the potential to expose sensitive receptors to substantial pollutant concentrations or result in a cumulatively considerable net increase of any criteria pollutant for which the Project region is in nonattainment under an applicable federal or state ambient air quality standard.	SU	***Mitigation Measure 3.2-1:*** *Prior to the certificate of occupancy issuance, the Project applicant shall demonstrate to the satisfaction of the City of Irwindale Community Development Manager/City Planner and/or their designee that the following measures would be implemented during Project operations. These measures shall be enforced and maintained through Covenants, Codes, and Restrictions (CC&Rs), or other means acceptable to the City of Irwindale Community Development Manager/City Planner and/or their designee.* • *The proposed warehouse shall be constructed with the appropriate infrastructure to facilitate sufficient electric charging for trucks to plug-in in anticipation of future technology allowing trucks to operate partially on electricity.*	SU

CC – cumulatively considerable *LCC – less than cumulatively considerable* *LS – less than significant*

PS – potentially significant *B – beneficial impact* *SU – significant and unavoidable*

TABLE ES-2: PROJECT IMPACTS AND PROPOSED MITIGATION MEASURES

ENVIRONMENTAL IMPACT	*LEVEL OF SIGNIFICANCE WITHOUT MITIGATION*	*MITIGATION MEASURE*	*RESULTING LEVEL OF SIGNIFICANCE*
		• *At least five percent of all vehicle parking spaces shall include rough-in of electrical conduit for future EV charging stations. Further, provisions for future electrical hookups to plug in any onboard auxiliary equipment shall be provided for Project trucks at each dock door location. Electrical panels shall be appropriately sized to allow for future expanded use.* • *Legible, durable, weather-proof signs shall be placed at truck access gates, loading docks, and truck parking areas that identify applicable California Air Resources Board (CARB) anti-idling regulations. At a minimum each sign shall include: 1) instructions for truck drivers to shut off engines when not in use; 2) instructions for drivers of diesel trucks to restrict idling to no more than five minutes; and 3) telephone numbers of the building facilities manager and CARB to report violations.* • *Maintain a buffer zone of at least 150 feet between truck loading zones/docks and the nearest sensitive receptors.* • *All service equipment (i.e., forklifts) used within the site shall be electric or compressed natural gas-powered (propane).* • *In order to promote alternative fuels, and help support "clean" truck fleets, the developer/successor-in-interest shall provide building occupants with information related to SCAQMD's Carl Moyer Program, or other such programs that promote truck retrofits or "clean" vehicles and information including, but not limited to, the health effect of diesel particulates, benefits of reduced idling time, CARB regulations, and importance of not parking in residential areas. Tenants shall be notified about the availability of: 1) alternatively fueled cargo handling equipment; 2) grant programs for diesel-fueled vehicle engine retrofit and/or replacement; 3) designated truck parking locations in the Project vicinity; 4) access to alternative fueling stations proximate to the site that supply compressed natural gas; and 5) the United States Environmental Protection Agency's SmartWay program.* • *There shall be provisions for preferential parking for carpoolers and vanpools.*	
Impact 3.2-3: Proposed Project construction has the potential to expose sensitive receptors to substantial pollutant concentrations or result in a	PS	***Mitigation Measure 3.2-2:*** *Prior to the grading permit issuance, the Project applicant shall demonstrate to the satisfaction of the City of Irwindale Community Development Manager/City Planner and/or their designee that the following measures would be*	LS

CC – cumulatively considerable *LCC – less than cumulatively considerable* *LS – less than significant*

PS – potentially significant *B – beneficial impact* *SU – significant and unavoidable*

TABLE ES-2: PROJECT IMPACTS AND PROPOSED MITIGATION MEASURES

ENVIRONMENTAL IMPACT	*LEVEL OF SIGNIFICANCE WITHOUT MITIGATION*	*MITIGATION MEASURE*	*RESULTING LEVEL OF SIGNIFICANCE*
cumulatively considerable net increase of any criteria pollutant for which the Project region is in nonattainment under an applicable federal or state ambient air quality standard.		*implemented during Project construction activities. These measures shall be enforced and maintained by the construction contractor throughout construction activities.* • *Ensure the cleanest possible construction practices and equipment are used. This includes eliminating the idling of diesel-powered equipment and providing the necessary infrastructure (e.g. electrical hookups) to support zero and near-zero equipment and tools;* • *Implement, and plan accordingly for, the necessary infrastructure to support zero and near-zero emission technology vehicles and equipment that will be operating on-site. Necessary infrastructure may include the physical (e.g. needed footprint), energy, and fueling infrastructure for construction equipment, on-site vehicles and equipment, and medium-heavy and heavy-duty trucks;* • *In construction contracts, include language that requires all construction equipment and fleets to be in compliance with all current air quality regulations;* • *Apply water every 3 hours to disturbed areas within a construction site;* • *Require minimum soil moisture of 12% for earthmoving by use of a moveable sprinkler system or a water truck. Moisture content can be verified by lab sample or moisture probe.* • *Limit on-site vehicle speeds (on unpaved roads) to 15 mph;* • *Replace ground cover in disturbed areas as quickly as possible;* • *All trucks hauling dirt, sand, soil, or other loose materials are to be tarped with a fabric cover and maintain a freeboard height of 12 inches.* • *Apply chemical dust suppressant annually to unpaved parking areas.* • *Cover inactive storage piles;* • *Sweep streets if visible soil material is carried out from the construction site; and/or* • *Post a publicly visible sign written in English and Spanish which specifies the telephone number and person to contact regarding dust complaints. This person shall respond to complaints and take corrective action within 48 hours. The sign shall be in accordance with SCAQMD and/or City requirements, as applicable;*	

CC – cumulatively considerable *LCC – less than cumulatively considerable* *LS – less than significant*

PS – potentially significant *B – beneficial impact* *SU – significant and unavoidable*

TABLE ES-2: PROJECT IMPACTS AND PROPOSED MITIGATION MEASURES

ENVIRONMENTAL IMPACT	*LEVEL OF SIGNIFICANCE WITHOUT MITIGATION*	*MITIGATION MEASURE*	*RESULTING LEVEL OF SIGNIFICANCE*
		• *Further, where reasonably feasible, construction equipment should include the use of alternative fuels such as compressed natural gas (CNG), propane, electricity or biodiesel.*	
Impact 3.2-4: The proposed Project has the potential to result in other emissions (such as those leading to odors) affecting a substantial number of people.	LS	*None required.*	--
Impact 3.2-5: The proposed Project has the potential to cause substantial adverse effects on human beings, either directly or indirectly.	SU	***Implement Mitigation Measures 3.2-1 and 3.1-2***	SU
GEOLOGY AND SOILS			
Impact 3.3-1: The proposed Project may expose people or structures to potential substantial adverse effects involving strong seismic ground shaking or seismic related ground failure.	LS	*None required.*	--
Impact 3.3-2: The proposed Project has the potential to be located on a geologic unit or soil that is unstable, or that would become unstable as a result of Project implementation, and potentially result in landslide, lateral spreading, subsidence, liquefaction or collapse.	PS	***Mitigation Measure 3.3-1:*** *Prior to earthmoving activities for each phase of the Project, a certified geotechnical engineer, or equivalent, shall be retained to perform a final geotechnical evaluation of the soils at a design-level as required by the requirements of the California Building Code Title 24, Part 2, Chapter 18, Section 1803.1.1.2 related to expansive soils and other soil conditions. The evaluation shall be prepared in accordance with the standards and requirements outlined in California Building Code, Title 24, Part 2, Chapter 16, Chapter 17, and Chapter 18, which addresses structural design, tests and inspections, and soils and foundation standards. The final geotechnical evaluation shall include design recommendations to ensure that soil conditions do not pose a threat to the health and safety of people or structures, including threats from liquefaction, liquefaction induced settlement, or lateral spreading. The grading and improvement plans, as well as the storm drainage and building plans for each phase of the Project shall be designed in accordance with the recommendations provided in the final geotechnical evaluation.*	LS
Impact 3.3-3: Potential for expansive soils to create substantial risks to life or property.	PS	*Implement* ***Mitigation Measure 3.3-1***	LS

CC – cumulatively considerable *LCC – less than cumulatively considerable* *LS – less than significant*

PS – potentially significant *B – beneficial impact* *SU – significant and unavoidable*

TABLE ES-2: PROJECT IMPACTS AND PROPOSED MITIGATION MEASURES

ENVIRONMENTAL IMPACT	*LEVEL OF SIGNIFICANCE WITHOUT MITIGATION*	*MITIGATION MEASURE*	*RESULTING LEVEL OF SIGNIFICANCE*
GREENHOUSE GASES AND CLIMATE CHANGE			
Impact 3.4-1: Potential to generate greenhouse gas emissions, either directly or indirectly, that may have a significant impact on the environment	PS	***Mitigation Measure 3.4-1:*** *Prior to the certificate of occupancy issuance, the Project Applicant shall demonstrate to the satisfaction of the City of Irwindale Community Development Manager/City Planner and/or their designee that the following measures would be implemented during Project operations. These measures shall be enforced and maintained through Covenants, Codes, and Restrictions (CC&Rs), or other means acceptable to the City of Irwindale Community Development Manager/City Planner and/or their designee.* • *Maximize use of solar energy, including solar panels.* • *Install the maximum possible number of solar energy arrays on the building roof and/or on the Project site to generate solar energy for the facility.* • *Maximize the planting of trees in landscaping and parking lots.* • *Employ the use of light-colored paving and roofing materials.* • *Utilize only Energy Star heating, cooling, and lighting devices and appliances.* • *Employ the use of electric or alternatively-fueled sweeper with high-efficiency particulate air (HEPA) filters.*	LS
Impact 3.4-2: Potential to conflict with an applicable plan, policy, or regulation adopted for the purpose of reducing the emissions of greenhouse gases	LS	*None required.*	--
Impact 3.4-3: Project implementation may result in the inefficient, wasteful, or unnecessary use of energy resources	LS	*None required.*	--
HAZARDS AND HAZARDOUS MATERIALS			
Impact 3.5-1: Potential to create a significant hazard through the routine transport, use, or disposal of hazardous materials or through the reasonably foreseeable upset and accident	PS	***Mitigation Measure 3.5-1****: Prior to the commencement of a business operation that involves the transport, storage, use, or disposal of a significant quantity hazardous material within the Project site, the business owner shall submit a Hazardous Materials Business Plan (HMBP) for review and approval by the Los Angeles County Fire Department Health Hazardous Materials Division. The HMBP shall establish management practices for*	LS

CC – cumulatively considerable *LCC – less than cumulatively considerable* *LS – less than significant*

PS – potentially significant *B – beneficial impact* *SU – significant and unavoidable*

TABLE ES-2: PROJECT IMPACTS AND PROPOSED MITIGATION MEASURES

ENVIRONMENTAL IMPACT	*LEVEL OF SIGNIFICANCE WITHOUT MITIGATION*	*MITIGATION MEASURE*	*RESULTING LEVEL OF SIGNIFICANCE*
conditions involving the release of hazardous materials into the environment.		*handling, storing, and disposal of hazardous materials, including fuels, paints, cleaners, solvents, pesticides, fertilizers, etc., during operations to reduce the potential for spills and to direct the safe handling of these materials if encountered. The HMBP shall also identify the appropriate area for mixing/loading pesticides and fertilizers and for fuel dispensing, which shall be separated to ensure safety. The areas shall be designed with spillage catchments such that any accidental spillage is prevented from entering waterways. The business owner shall also consult with the Los Angeles County Fire Department Health Hazardous Materials Division to ensure that the particular business operations are compliant with all local, state, and federal regulations relative to their operations (i.e. proper permits for the installation and use of an underground storage of hazardous substances (USTs)). The approved HMBP and any other permit deemed to be required in order to commence the specific business operations shall be maintained onsite and all personnel shall acknowledge that they have reviewed and understand the HMBP and any other permit requirements.*	
Impact 3.5-2: Potential to emit hazardous emissions or handle hazardous or acutely hazardous materials, substances, or waste within one-quarter mile of an existing or proposed school.	LS	*None required.*	--
Impact 3.5-3: Potential to result in impacts from being included on a list of hazardous materials sites compiled pursuant to Government Code Section 65962.5.	LS	*None required.*	--
Impact 3.5-4: Potential to result in a safety hazards for people residing or working on the Project site as a result of public airport, public use airport, or private airstrip.	LS	*None required.*	--
Impact 3.5-5: Potential to impair implementation of or physically interfere with an adopted emergency response plan or emergency evacuation plan.	LS	*None required.*	--

CC – cumulatively considerable *LCC – less than cumulatively considerable* *LS – less than significant*

PS – potentially significant *B – beneficial impact* *SU – significant and unavoidable*

TABLE ES-2: PROJECT IMPACTS AND PROPOSED MITIGATION MEASURES

ENVIRONMENTAL IMPACT	*LEVEL OF SIGNIFICANCE WITHOUT MITIGATION*	*MITIGATION MEASURE*	*RESULTING LEVEL OF SIGNIFICANCE*
Impact 3.5-6: Potential to expose people or structures to a risk of loss, injury or death from wildland fires.	LS	*None required.*	--
HYDROLOGY AND WATER QUALITY			
Impact 3.6-1: The proposed Project has the potential to violate water quality standards or waste discharge requirements or otherwise substantially degrade surface or ground water quality	LS	***Mitigation Measure 3.6-1****: The Project applicant shall implement the following nonstructural BMPs that focus on preventing pollutants from entering stormwater:* • *Pollution Prevention/Good Housekeeping* ○ *Prior to clearing, grading, and disturbances to the ground such as stockpiling, or excavation in each phase of the Project, the Project proponent shall develop a spill response and prevention plan as a component of (1) SWPPPs prepared for construction activities, (2) SWPPPs for facilities subject to the NPDES Stormwater Permit, and (3) spill prevention control and countermeasure plans for qualifying facilities. The spill response and prevention plan shall be implemented during all construction activities.* ○ *Streets and parking lots in all non-residential portions of the Project site shall be swept at least once every two weeks.* • *Operation and Maintenance (O&M) of Treatment Controls* ○ *Prior to clearing, grading, and disturbances to the ground such as stockpiling, or excavation in each phase of the Project, the Project proponent shall develop an Operation and Maintenance (O&M) Plan for the storm drainage facilities to ensure long-term performance. The O&M plan shall incorporate the manufacturers' recommended maintenance procedures and include (1) provisions for debris removal, (2) guidance for addressing public health or safety issues, and (3) methods and criteria for assessing the efficacy of the storm drainage system. An annual report shall be submitted to the City certifying that maintenance of the facilities was conducted according to the O&M plan.*	LS
Impact 3.6-2: The proposed Project has the potential to substantially deplete groundwater	LS	*None required.*	--

CC – cumulatively considerable *LCC – less than cumulatively considerable* *LS – less than significant*

PS – potentially significant *B – beneficial impact* *SU – significant and unavoidable*

TABLE ES-2: PROJECT IMPACTS AND PROPOSED MITIGATION MEASURES

ENVIRONMENTAL IMPACT	*LEVEL OF SIGNIFICANCE WITHOUT MITIGATION*	*MITIGATION MEASURE*	*RESULTING LEVEL OF SIGNIFICANCE*
supplies or interfere substantially with groundwater recharge such that the project may impede sustainable groundwater management of the basin.			
Impact 3.6-3: The proposed Project would not alter the existing drainage pattern of the site or area, including the alteration of the course of a river or through the addition of impervious surfaces, in a manner which would result in substantial erosion, siltation, surface runoff, flooding, or polluted runoff.	PS	*Implement* ***Mitigation Measure 3.6-1***	LS
Impact 3.6-4 The proposed Project has the potential to, in a flood hazard, tsunami, or seiche zones, risk release of pollutants due to project inundation.	LS	*None required.*	--
Impact 3.6-5 The proposed Project has the potential to conflict with or obstruct implementation of a water quality control plan or sustainable groundwater management plan.	PS	*Implement* ***Mitigation Measures 3.6-1***	LS
NOISE			
Impact 3.7-1: The Project may result in exposure of persons to or generation of substantial temporary or permanent increase in ambient noise levels in excess of standards established in the local general plan or noise ordinance, or applicable standards of other agencies – Project Operation	LS	*None required.*	LS
Impact 3.7-2: The Project may result in exposure of persons to or generation of substantial temporary increase in ambient noise levels in excess of standards established in the local	LS	***Mitigation Measure 3.7-1:*** *To reduce potential construction noise impacts during Project construction, the following multi-part mitigation measure shall be implemented for the Project:*	LS

CC – cumulatively considerable *LCC – less than cumulatively considerable* *LS – less than significant*

PS – potentially significant *B – beneficial impact* *SU – significant and unavoidable*

TABLE ES-2: PROJECT IMPACTS AND PROPOSED MITIGATION MEASURES

ENVIRONMENTAL IMPACT	*LEVEL OF SIGNIFICANCE WITHOUT MITIGATION*	*MITIGATION MEASURE*	*RESULTING LEVEL OF SIGNIFICANCE*
general plan or noise ordinance, or applicable standards of other agencies – Project Construction.		• *All construction equipment powered by internal combustion engines shall be properly muffled and maintained.* • *Quiet construction equipment, particularly air compressors, are to be selected whenever possible.* • *All stationery noise-generating construction equipment such as generators or air compressors are to be located as far as is practical from existing residences. In addition, the Project contractor shall place such stationary construction equipment so that emitted noise is directed away from sensitive receptors nearest the Project site.* • *Unnecessary idling of internal combustion engines is prohibited.* • *The construction contractor shall, to the maximum extent practical, locate on-site equipment staging areas so as to maximize the distance between construction-related noise sources and noise-sensitive receptors nearest the Project site during all Project construction.* • *Construction shall be limited to 7 AM to 7 PM on weekdays and 8 AM to 4 PM on Saturdays with no work allowed on Sundays unless otherwise authorized by the City in writing.* • *Staging areas on the Project site shall be located in areas that maximize, to the extent feasible, the distance between staging activity and sensitive receptors.* *These requirements shall be noted on the Project improvement plans.*	
Impact 3.7-3: The Project may result in exposure of persons to or generation of excessive groundborne vibration or groundborne noise levels.	LS	*None required.*	--
TRANSPORTATION AND CIRCULATION			
Impact 3.8-1: The Project would not conflict or be inconsistent with CEQA Guideline section 15064.3, subdivision (b).	PS	***Mitigation Measure 3.8-1:*** *The Project employer shall be required to provide general commute benefits to employees, which may include financial subsidies or pre-tax deductions for transit, carpooling, and vanpooling activities. All employees shall be eligible for alternative transportation benefits.*	LS

CC – cumulatively considerable *LCC – less than cumulatively considerable* *LS – less than significant*

PS – potentially significant *B – beneficial impact* *SU – significant and unavoidable*

TABLE ES-2: PROJECT IMPACTS AND PROPOSED MITIGATION MEASURES

ENVIRONMENTAL IMPACT	*LEVEL OF SIGNIFICANCE WITHOUT MITIGATION*	*MITIGATION MEASURE*	*RESULTING LEVEL OF SIGNIFICANCE*
Impact 3.8-2: The Project would not conflict with a program, plan, ordinance, or policy addressing the circulation system, including transit, roadway, bicycle, and pedestrian facilities.	LS	*None required.*	--
Impact 3.8-3: The proposed Project may substantially increase hazards due to a geometric design feature (e.g., sharp curves or dangerous intersections) or incompatible uses (e.g., farm equipment)	LS	*None required.*	--
Impact 3.8-4: The proposed Project would not result in inadequate emergency access.	LS	*None required.*	--
CUMULATIVE IMPACTS			
Impact 4.1: Cumulative Impacts on Aesthetics and Visual Resources	LS and LCC	*Implement* ***Mitigation Measure 3.1-1***	--
Impact 4.2: Cumulative Impact on the Region's Air Quality	SU and CC	*Implement* ***Mitigation Measure 3.2.-1*** *and* ***Mitigation Measure 3.2-2***	CC and SU
Impact 4.3: Cumulative Impact on Geologic and Soils Resources	LS and LCC	*Implement* ***Mitigation Measure 3.3-1***	--
Impact 4.4: Cumulative Impact on Climate Change from Increased Project-Related Greenhouse Gas Emissions	LS and LCC	*Implement* ***Mitigation Measure 3.4-1***	--
Impact 4.5: Cumulative Impact Related to Hazards and Hazardous Materials	LS and LCC	*None required.*	--
Impact 4.6: Cumulative Impact Related to Hydrology and Water Quality	LS and LCC	*Implement* ***Mitigation Measure 3.6-1***	--
Impact 4.7: Cumulative Impact Related to Noise (Less than Significant and Less than Cumulatively Considerable)	LS and LCC	*None required.*	--
Impact 4.8: Cumulative Impact Related to Transportation and Circulation	LS and LCC	*None required.*	--

CC – cumulatively considerable *LCC – less than cumulatively considerable* *LS – less than significant*

PS – potentially significant *B – beneficial impact* *SU – significant and unavoidable*

1.1 PURPOSE AND INTENDED USES OF THE EIR

The City of Irwindale, as the lead agency, determined that the proposed 5175 Vincent Avenue Project is a "project" within the definition of the California Environmental Quality Act (CEQA). CEQA requires the preparation of an environmental impact report (EIR) prior to approving any project, which may have a significant impact on the environment. For the purposes of CEQA, the term "project" refers to the whole of an action, which has the potential for resulting in a direct physical change or a reasonably foreseeable indirect physical change in the environment (CEQA Guidelines Section 15378[a]).

An EIR must disclose the expected environmental impacts, including impacts that cannot be avoided, growth-inducing effects, impacts found not to be significant, and significant cumulative impacts, as well as identify mitigation measures and alternatives to the proposed project that could reduce or avoid its adverse environmental impacts. CEQA requires government agencies to consider and, where feasible, minimize environmental impacts of proposed development; public agencies have an obligation to balance a variety of public objectives, including economic, environmental, and social factors.

The City of Irwindale, as the lead agency, has prepared this Draft EIR to provide the public and responsible and trustee agencies with an objective analysis of the potential environmental impacts resulting from implementation of the proposed Project. The environmental review process enables interested parties to evaluate the proposed Project in terms of its environmental consequences, to examine and recommend methods to eliminate or reduce potential adverse impacts, and to consider a reasonable range of alternatives to the proposed Project. This EIR will be used by the City of Irwindale to determine whether to approve, modify, or deny the proposed Project and associated approvals in light of the Project's environmental effects. The EIR will be used as the primary environmental document to evaluate full development, all associated infrastructure improvements, and permitting actions associated with the proposed Project. All of the actions and components of the proposed Project are described in detail in Chapter 2.0, Project Description.

1.2 TYPE OF EIR

The State CEQA Guidelines identify several types of EIRs, each applicable to different project circumstances. This EIR has been prepared as a Project-level EIR, which is described in State CEQA Guidelines § 15161 as: "The most common type of EIR (which) examines the environmental impacts of a specific development project. This type of EIR should focus primarily on the changes in the environment that would result from the development project. The EIR shall examine all phases of the project including planning, construction, and operation. The project-level analysis considers the broad environmental effects of the proposed Project.

1.3 KNOWN RESPONSIBLE AND TRUSTEE AGENCIES

The term "Responsible Agency" includes all public agencies other than the Lead Agency that have discretionary approval power over the proposed Project or an aspect of the proposed Project (CEQA

Guidelines Section 15381). For the purpose of CEQA, a "Trustee" agency has jurisdiction by law over natural resources that are held in trust for the people of the State of California (CEQA Guidelines Section 15386). The following agencies are considered "Responsible Agencies" or "Trustee Agencies" for the proposed Project, and may be required to issue permits or approve certain aspects of the proposed Project:

- Regional Water Quality Control Board (RWQCB) – Construction activities would be required to be covered under the National Pollution Discharge Elimination System (NPDES);
- RWQCB – The Storm Water Pollution Prevention Plan (SWPPP) would be required to be approved prior to construction activities pursuant to the Clean Water Act;
- South Coast Air Quality Management District (SCAQMD) – Construction activities would be subject to the SCAQMD permits, codes, and requirements.

1.4 ENVIRONMENTAL REVIEW PROCESS

The review and certification process for the EIR has involved, or will involve, the following general procedural steps:

NOTICE OF PREPARATION AND INITIAL STUDY

The City of Irwindale circulated an Initial Study (IS) and Notice of Preparation (NOP) of an EIR for the proposed Project on February 10, 2020 to the State Clearinghouse, State Responsible Agencies, State Trustee Agencies, Other Public Agencies, Organizations and Interested Persons. A public scoping meeting was held on February 20, 2020 to present the project description to the public and interested agencies, and to receive comments from the public and interested agencies regarding the scope of the environmental analysis to be included in the Draft EIR. Concerns raised in response to the NOP were considered during preparation of the Draft EIR. The IS, NOP, and comments received on the NOP by interested parties are presented in Appendix A.

DRAFT EIR

This document constitutes the Draft EIR. The Draft EIR contains a description of the proposed Project, description of the environmental setting, identification of project impacts, and mitigation measures for impacts found to be significant, as well as an analysis of project alternatives, identification of significant irreversible environmental changes, growth-inducing impacts, and cumulative impacts. This Draft EIR identifies issues determined to have no impact or a less than significant impact, and provides detailed analysis of potentially significant and significant impacts. Comments received in response to the NOP were considered in preparing the analysis in this EIR. Upon completion of the Draft EIR, the City of Irwindale will file the Notice of Completion (NOC) with the State Clearinghouse of the Governor's Office of Planning and Research to begin the public review period. Additionally, the City of Irwindale will file the Notice of Availability with the County Clerk and have it published in a newspaper of regional circulation to begin the local public review period.

PUBLIC NOTICE/PUBLIC REVIEW

The City of Irwindale will provide a public notice of availability for the Draft EIR, and invite comment from the general public, agencies, organizations, and other interested parties. Consistent with CEQA, the review period for this Draft EIR is forty-five (45) days. Public comment on the Draft EIR will be accepted in written form. All comments or questions regarding the Draft EIR should be addressed to:

Attn: Brandi Jones, Senior Planner
Irwindale Community Development Department, Planning Division
5050 North Irwindale Avenue
Irwindale, CA 91706
(626) 430-2260
BJones@irwindaleca.gov

RESPONSE TO COMMENTS/FINAL EIR

Following the public review period, a Final EIR will be prepared. The Final EIR will respond to written comments received during the public review period and to oral comments received at a public hearing during such review period.

CERTIFICATION OF THE EIR/PROJECT CONSIDERATION

The City of Irwindale will review and consider the Final EIR. If the City of Irwindale finds that the Final EIR is "adequate and complete", the City of Irwindale will certify the Final EIR in accordance with CEQA. The rule of adequacy generally holds that an EIR can be certified if:

1) The EIR shows a good faith effort at full disclosure of environmental information; and

2) The EIR provides sufficient analysis to allow decisions to be made regarding the proposed project in contemplation of environmental considerations.

Following review and consideration of the Final EIR, the City of Irwindale may take action to approve, modify, or reject the proposed Project. A Mitigation Monitoring Program, as described below, would also be adopted in accordance with Public Resources Code Section 21081.6(a) and CEQA Guidelines Section 15097 for mitigation measures that have been incorporated into or imposed upon the proposed Project to reduce or avoid significant effects on the environment. This Mitigation Monitoring Program will be designed to ensure that these measures are carried out during Project implementation, in a manner that is consistent with the EIR.

1.5 ORGANIZATION AND SCOPE

Sections 15122 through 15132 of the State CEQA Guidelines identify the content requirements for Draft and Final EIRs. An EIR must include a description of the environmental setting, an environmental impact analysis, mitigation measures, alternatives, significant irreversible environmental changes, growth-inducing impacts, and cumulative impacts. Discussion of the environmental issues addressed in the Draft EIR was established through review of environmental

and planning documentation developed for the proposed Project, environmental and planning documentation prepared for recent projects located within the City of Irwindale, applicable local and regional planning documents, and responses to the NOP.

This Draft EIR is organized in the following manner:

EXECUTIVE SUMMARY

This Executive Summary summarizes the characteristics of the proposed Project, known areas of controversy and issues to be resolved, and provides a concise summary matrix of the proposed Project's environmental impacts and possible mitigation measures. This chapter identifies alternatives that reduce or avoid at least one significant environmental effect of the proposed Project.

CHAPTER 1.0 – INTRODUCTION

Chapter 1.0 briefly describes the purpose of the environmental evaluation, identifies the lead, trustee, and responsible agencies, summarizes the process associated with preparation and certification of an EIR, and identifies the scope and organization of the Draft EIR.

CHAPTER 2.0 – PROJECT DESCRIPTION

Chapter 2.0 provides a detailed description of the proposed Project, including the location, intended objectives, background information, the physical and technical characteristics, including the decisions subject to CEQA, related improvements, and a list of related agency action requirements.

CHAPTER 3.0 – ENVIRONMENTAL SETTING, IMPACTS AND MITIGATION MEASURES

Chapter 3.0 contains an analysis of environmental topic areas as identified below. Each subchapter addressing a topical area is organized as follows:

Environmental Setting. A description of the existing environment as it pertains to the topical area.

Regulatory Setting. A description of the regulatory environment that may be applicable to the proposed Project.

Impacts and Mitigation Measures. Identification of the thresholds of significance by which impacts are determined, a description of Project-related impacts associated with the environmental topic, identification of appropriate mitigation measures, and a conclusion as to the significance of each impact.

The following environmental topics are addressed in this section:

- Aesthetics and Visual Resources
- Air Quality
- Geology and Soils
- Greenhouse Gases, Climate Change, and Energy

- Hazards and Hazardous Materials
- Hydrology and Water Quality
- Noise
- Transportation and Circulation

CHAPTER 4.0 – OTHER CEQA-REQUIRED TOPICS

Chapter 4.0 evaluates and describes the following CEQA required topics: impacts considered less-than-significant, significant and irreversible impacts, growth-inducing effects, cumulative, and significant and unavoidable environmental effects.

CHAPTER 5.0 – ALTERNATIVES TO THE PROJECT

State CEQA Guidelines Section 15126.6 requires that an EIR describe a range of reasonable alternatives to the proposed Project, which could feasibly attain the basic objectives of the proposed Project and avoid and/or lessen any significant environmental effects of the proposed Project. Chapter 5.0 provides a comparative analysis between the environmental impacts of the proposed Project and the selected alternatives.

CHAPTER 6.0 – REPORT PREPARERS

This section lists all authors and agencies that assisted in the preparation of the EIR, by name, title, and company or agency affiliation.

APPENDICES

This section includes all notices and other procedural documents pertinent to the EIR, as well as technical material prepared to support the analysis.

1.6 COMMENTS RECEIVED ON THE NOTICE OF PREPARATION

The City of Irwindale received six comment letters on the NOP for the proposed Project. A copy of the letters is provided in Appendix A of this Draft EIR. The commenting agency/citizen is provided below. The City also held a public scoping meeting on February 20, 2020. Four written comments were also provided at that scoping meeting and the authors are included below.

- Veronica Vanmarcke (February 20, 2020);
- Anonymous (February 20, 2020);
- Edward and Margaret Curren (February 20, 2020);
- James Trenkamp and Charlotte Santos (February 20, 2020);
- California Air Resources Board (March 10, 2020);
- California Department of Fish and Wildlife (March 10, 2020);
- California Department of Transportation (March 11, 2020);
- Gabrieleño Band of Mission Indians - Kizh Nation (March 12, 2020);
- Sanitation District of Los Angeles County (March 11, 2020);
- South Coast Air Quality Management District (March 10, 2020).

1.7 POTENTIAL AREAS OF CONCERN

Aspects of the proposed Project that could be of public concern include the following:

- Increased traffic on project area roadways and freeway on- and off-ramps;
- Noise concerns associated with traffic, idling, and reversing trucks;
- Pollution concerns associated with dust and increased truck traffic;
- Potential health risks in disadvantaged communities associated with diesel emissions, oxides of nitrogen, and greenhouse gases during operation and construction;
- Siting incompatible land uses and reducing air pollution impacts at the project- and cumulative-levels;
- Hours of operations and impacts associated with late night noise;
- Methods to reduce vehicle miles traveled and greenhouse gas emissions, such as promoting multimodal transportation;
- Ancestral tribal territory for the Gabrieleño Band of Mission Indians - Kizh Nation;
- Potential for aquatic, riparian, and wetland habitats to be located on-site.

2.1 PROJECT LOCATION AND SETTING

The 5175 Vincent Avenue Project site (Project site) is located north of a Los Angeles County-owned pit, east of Allen Drive, south of Arrow Highway, and west of Vincent Avenue in Irwindale, California (Figures 2.0-1 and 2.0-2). The Project site totals approximately 26.05 acres and is comprised of two vacant parcels; one of which is an undeveloped, recently filled, former aggregate mine pit known as the Manning Pit (Figure 2.0-3). The 2020 Assessor's Parcel Numbers (APNs) for the Project site are 8417-034-015 and 8417-034-016 (formally APNs: 8417-034-904, 8417-034-910, and 8417-034-911) (Figure 2.0-4). The elevation of the site ranges from approximately 400 feet to 460 feet above mean sea level (msl). The property is immediately adjacent to unincorporated Los Angeles County to the south and east.

2.2 HISTORICAL BACKGROUND

The Project site is the general location of the former Irwindale Pit No. 1 (Manning Brothers Pit) Project. Mining of the Manning Pit began in the 1930s and was completed in the 1970s. During mining operations, the pit was excavated to a maximum depth of 240 feet above msl, which equates to approximately 230 feet below ground surface (bgs). A portion of the site was subsequently used to dispose of silt, clay, and sand wash products (fines) from an on-site aggregate processing facility. The volume of the fine materials disposed of is estimated at 352,000 cubic yards.

The City of Irwindale acquired the northern portion of the pit (approximately 37 acres) in the late 1980s from the County of Los Angeles, and the County retained the remainder (approximately 45 acres) which is currently used as a supplemental water recharge basin in conjunction with the Irwindale Recharge Basin, located just to the west.

After its acquisition, the City began backfilling the site with a variety of construction debris (e.g., soil, concrete, asphalt, rebar, bricks, and cinder blocks) and other inert materials. At that time, no Quality Assurance/Quality Control (QA/QC) Program was performed to assure that the backfilling operation met the geotechnical considerations for future development of the site. However, backfilling was stopped in 1992 when it was discovered that improper filling methods had been used by the contractor. At the time backfilling was stopped, there was an estimated 665,000 cubic yards of rubble material placed over the estimated 352,000 cubic yards of fine materials. Therefore, the total estimated backfill volume that had been placed within the pit was approximately 1,017,000 cubic yards.

The Project site was then surface mapped to establish the overall nature of backfill within the area. Surface mapping of the site confirmed that the upper layer of the pit consisted of various construction rubble as well as large voids. In addition, portions of the perimeter slopes were underlain by non-engineered fill and talus material. The surface mapping also revealed that relatively small wedges of engineered fill were under the perimeter slopes in the northwest corner of the Project site.

In October 2005, the City contracted with GeoLogic Associates to perform a field exploration program to characterize the historical backfill on the Project site. The exploration consisted of drilling five borings through the backfill material to native soil at various locations along the bottom of the pit. The purpose of the borings was to determine:

- The nature and types of backfill present in the pit;
- The volume of backfill present in the pit; and
- The current groundwater level below the pit.

The results of the exploration program confirmed that two distinct layers of backfill material existed. The upper layer consisted of very coarse construction rubble and varied in depth from approximately 27 to 39 feet below the current bottom of the pit surface. The borings indicated that the upper layer was highly voided with little soil mixed in the construction rubble. The lower layer consisted of aggregate mining waste (e.g., fine to very fine-grained sand, very fine sandy silt, and silt) from the processing plant operation and varied from about 7 to 43 feet in depth. These 2005 boring results were consistent with the findings of an earlier investigation performed by Greystone Environmental Consultants in 2000.

The highest groundwater elevation observed during borings was 283 feet above msl. This elevation appears to be the highest groundwater elevation, because it reflects the record rainfall of the preceding winter of 2004/2005. This groundwater elevation may also reflect water mounding from the Los Angeles County storage and recharge operations just south of the City's site. Therefore, it was determined that approximately 55 feet of backfill material lies below the reported high groundwater level.

The boring results indicated that the historical backfill materials at the mine did not meet engineered backfill requirements specified in the City of Irwindale's *Guidelines for Above Water Backfilling of Open-Pit Mines* (November 22, 2005) or the applicable Building Codes. Consequently, the City proposed to partially or completely remove the historic fill, reprocess the material, and recompact the historical backfill in accordance with the current City and County requirements. The City determined that as future (clean soil) fill material is brought to the site, it would be required to meet these guidelines.

In response to the geotechnical data and conclusions from the testing, the City decided to reclaim the Project site in accordance with the City and County codes and guidelines. The mining waste under the construction rubble would be inspected by a Geotechnical Engineer who would determine suitability of materials to be left in place. Native alluvium material would not be removed. After reclamation, the City would then consider development proposals.

In the process of backfilling and grading, non-engineered backfill material would be excavated and stockpiled on the site. Clean soil that meets the general particle size guidelines set by the City for disposal above and below the water table would then be imported to the site and placed as compacted backfill. On-site stockpiled backfill that contains materials restricted for disposal in groundwater (e.g., asphalt and other materials) would be set aside for subsequent placement in the above-groundwater portion of the pit area. Some of the imported backfill would be blended with the on-site backfill so that the composited materials meet City and County requirements. When on-site backfill is depleted, the remainder of the site would be backfilled using clean soil. Materials unsuitable for backfill use would be removed from the site and disposed of in accordance with the applicable federal and State laws.

Compaction and other regulations dealing with the backfill materials are covered in the City of Irwindale's Building Code and Backfilling Guidelines, which identify material specifications, testing requirements, and other conditions for backfilling and grading. General material specifications include:

- Proper moisture levels;
- Fill materials placed deeper than 40 feet are required to be compacted to at least 93 percent; and
- Fill materials placed within 40 feet are required to be compacted to at least 90 percent.

It was estimated that approximately five million cubic yards of additional backfill material would be needed to fill the pit to near street level. All of these incoming materials would need to be screened to make sure they were not contaminated and met backfill requirements. It was estimated that backfilling and grading of the pit would take approximately six to seven years to complete assuming an annual rate of approximately 840,000 cubic yards of backfill materials. Backfill was estimated to require approximately 200 daily truck trips to the site.

The operation plan established that the maximum operating hours for the pit would be from 7:00 am to 5:00 pm Monday through Friday, and from 7:00 am through 4:00 pm on Saturday. On-site equipment was estimated to consist of 972G and 980 (G or H) loaders; 2,000- and 4,000-gallon watering trucks; 320C, 345B, or 365B excavators; rock, asphalt, or concrete crushers; 824C, 823C, D8R, or D10R bulldozers; dump and haul trucks; and other assorted equipment.

In October 2007, the former Irwindale Community Redevelopment Agency approved a License Agreement for Windrow Earth Transport (WET), Inc. to perform remediation and grading of the Manning Pit Project. The following is a summary of the scope of work for this remediation project:

a. Remediate the existing uncertified rubble fill that was placed by K & K Contractor.
b. Complete the grading of the site with clean soil fill to final surface design elevation.
c. Pay for any required environmental and geotechnical oversight to ensure that all import and placed soil meets all regulatory guidelines and to provide all necessary certifications for a buildable site after the completion of the project.
d. Mitigate the silt and mining waste products using acceptable methods approved by the City Engineer's office.
e. Prepare final closure report to be submitted to State Regional Water Quality Control Board (RWQCB), as required by the Manning Pit Waste Discharge Requirements.

With the elimination of all redevelopment agencies in the State of California in 2012, the City Council approved the purchase of the Manning Pit from the Successor Agency to the Irwindale Community Redevelopment Agency in August 2014 in order to continue with the remediation and grading of the site. The Manning Pit Project was completed in January 2019. According to City records, the site was completely filled with clean soil and is clean to state and federal standards for housing development. As required in the License Agreement, the operator submitted a request to the City to commence the process to close the project. According to the grading permit issued to the Windrow Earth Transport, Inc., the onsite drainage improvements and Storm Water Prevention measures were implemented in compliance with the current building code.

With acceptance of the remediation project by the City, a final closure package was submitted to the Regional Water Quality Control Board (RWQCB), as required by the Manning Pit Waste Discharge Requirements. In accordance with the License Agreement, the City Council approved the release of the project In Lieu Bond Fee in the amount of $210,000 from the Manning Project Trust Fund deposit account,

to be returned to the Special Mining Fund Balance upon receiving the final approval from RWQCB. The City Council also authorized a Lot Line Adjustment to release the southerly ten foot area that is a part of the engineered buttress fill across the property boundary between the City Manning Pit and the Los Angeles County Flood Control District owned portion of the Manning Pit to the current property owner for future operation and maintenance as required by the City County Cooperative Agreement.

Since completion of the on-site remediation activities, the site has remained undeveloped and has not been utilized for any purpose. The site is currently surrounded by a fence, wall, and landscaping and is not currently accessibly by the public.

2.3 PUBLIC OUTREACH

The City received an application to develop 26.05 acres of land that was formerly used as a mining pit and has since been remediated, as described above. The Project would change the 6.93-acre portion of the parcel from "Residential" to "Industrial/Business Park," and develop the entire parcel as a single use industrial Project, as described in Section 2.4, Project Description.

On August 9, 2018, the Planning Division hosted a community meeting at the Irwindale Community Center. The purpose of the meeting was to provide an opportunity for the community to review and comment on the proposed Project, ask questions, and understand the process. Representatives from Five Points, LLC and City staff attended. The meeting was well attended and the primary areas of concern were current issues with dust and trucks, and the potential impact of the proposed Project. Staff answered questions and made themselves available for assistance after the meeting via email and phone. Due to the Project's speculative nature (an industrial warehouse building with no identified end-user), staff indicated that there are many potential uses that are permitted by right due to the current zoning designation, but that certain uses would be not be allowed or would be subject to a Conditional Use Permit; these uses would require Planning Commission approval and be subject to a set of Conditions of Approval. At the January 30, 2019 Planning Commission Meeting, the General Plan Amendment and Site Plan and Design Review (DA) applications were continued to a date uncertain. The public hearing was opened for the continued item, which allowed for public comment. During the public comment period, residents from the City of Irwindale and unincorporated Los Angeles County spoke about the item.

The City prepared an Initial Study (IS) for the proposed Project in 2018 to evaluate the anticipated environmental impacts associated with development of the Project site in accordance with the application. A proposed Mitigated Negative Declaration was subsequently submitted to the State Clearinghouse for review on December 20, 2018 (State Clearinghouse # 2018121056). Public review of the document occurred from December 20, 2018 through January 22, 2019. During the public review period, twelve comment letters were received as follows: California Air Resources Board, California Department of Justice (Bureau of Environmental Justice), California Department of Transportation, California Environmental Protection Agency (Department of Resources Recycling and Recovery), County of Los Angeles Public Health (Environmental Health Division), County Sanitation District of Los Angeles County, Gabrieleño Band of Mission Indians (Kizh Nation), Golden State Environmental Justice Alliance, South Coast Air Quality Management District, California Department of Toxic Substances Control, California Department of Justice (Bureau of Environmental Justice), and California Governor's Office of Planning and Research (State Clearinghouse and Planning Unit). These comment letters raised concerns

regarding a variety of CEQA topics, and several commenters specifically suggested that an EIR is warranted. The City of Irwindale, in consideration of the comments and suggestions provided throughout the public outreach process to date, decided to prepare an EIR to address those specific concerns raised by the comment letters.

In order to initiate the EIR process, the City of Irwindale circulated an Initial Study (IS) and Notice of Preparation (NOP) of an EIR for the proposed Project on February 10, 2020 to the State Clearinghouse, State Responsible Agencies, State Trustee Agencies, Other Public Agencies, Organizations and Interested Persons. A public scoping meeting was held on February 20, 2020 to present the project description to the public and interested agencies, and to receive comments from the public and interested agencies regarding the scope of the environmental analysis to be included in the Draft EIR. Concerns raised in response to the NOP were considered during preparation of the Draft EIR. The IS, NOP, and comments received on the NOP by interested parties are presented in Appendix A.

2.4 PROJECT DESCRIPTION

The proposed Project is the development of 26.05 acres of land that was formerly used as a mining pit (Manning Pit) dating back to the 1930s. A reclamation process for the mine was completed and a closure report was approved by the City Council in January 2019 allowing for development of the site.

GENERAL PLAN AMENDMENT

The City of Irwindale General Plan specifically addresses development of the Manning Pit, a portion of which is the Project site. The General Plan notes that the City owned the northern portion of the pit, which contains two parcels: 8417-034-015 and 8417-034-016. The western parcel on the former Manning Pit (8417-034-912) is approximately 10 acres and is designated Residential, which is not part of the Project development. The eastern parcels comprise the Project site, and contains 19.12 acres of Industrial/Business Park and 6.93 acres of Residential. The entire 26.05 acres is zoned M-2 “Heavy Manufacturing.” This inconsistency between the General Plan land use designation and the zoning is associated with the 6.93 acres of Residential land use where the designation does not align with the parcel boundary.

The inconsistency between the General Plan and the zoning requires an amendment to bring the allowed uses/zoning into consistency before the Project could be developed in a way that meets the Project objectives. The City has received an application to change the 6.93-acre portion of the parcel from "Residential" to "Industrial/Business Park," which is consistent with the land use on the balance of the parcel. In addition to the General Plan Amendment, a Site Plan and Design Review application and Lot Line Adjustment are under concurrent review. A combination of the development and legislative applications and combining of the lots involves the development of the two (2) parcels as a single use industrial Project. This amendment would make the entire parcel a single land use. The application involves the development of the entire parcel as a single use industrial Project. The parcel to the west of the subject property would remain designated Residential.

The Industrial/Business Park General Plan land use designation allows for a variety of uses including: light industry, heavy industry, distribution, or commercial uses at a floor area ratio (FAR) of 1.0. The proposed

Project is an industrial warehouse building, which is specifically allowed under the Industrial/Business Park land use and the M-2 "Heavy Manufacturing" zoning. Based on the maximum FAR of 1.0 for the Industrial/Business Park designation, development of the site would allow for the construction of 1,134,738 square feet (sf) of industrial uses, 832,867 sf of which could be located on the 19.12 acres that is currently designated Industrial/Business Park under the existing General Plan land use.

INDUSTRIAL WAREHOUSE BUILDING

The Project proposes development of a 545,735-sf concrete tilt-up industrial warehouse building on the 26.05-acre site. Approximately 540,447 sf would be ground floor area and 5,000 sf would be mezzanine area. The proposed site plan is shown on Figure 2.0-5.

Potential End-Users/Businesses

According to the Institute of Transportation Engineers, a high-cube warehouse is a building that typically has at least 200,000 gross sf of floor area, has a ceiling height of 24 feet or more, and is used primarily for the storage and/or consolidation of manufactured goods (and to a lesser extent, raw materials) prior to their distribution to retail locations or other warehouses. Given that the proposed Project includes an industrial warehouse building totaling 545,735 sf, it is classified as a high-cube warehouse building.

A typical high-cube warehouse has a high level of on-site automation and logistics management. The automation and logistics enable highly-efficient processing of goods through the high-cube warehouse. High-cube warehouses are generally grouped into five types: transload facility, short-term storage facility, fulfillment center, parcel hub, and cold storage facility. However, the proposed Project, specifically excludes fulfillment center, parcel hub, and cold storage facility as a potential end user of the building. The applicant has indicated that these three uses (fulfillment center, parcel hub, and cold storage facility) are not proposed uses, and the applicant has agreed to conditions on the Project that would prohibit these uses at the Project site. Should these three uses be proposed at some future date, further environmental review shall be required.

End users could include light industrial or manufacturing uses. However, there is not a specific end user/business established for the proposed building at this time. There are a variety of possible businesses that could occupy and operate their business from the proposed building. The uses for the proposed building may include any of the following: Manufacturing Warehouse, Light Industrial, High-Cube Short-term, and High-Cube Transload. These uses are allowed under the Industrial/Business Park land use designation and M-2 "Heavy Manufacturing" zoning designation.

Warehouse Architecture

The proposed warehouse building would include articulations and varied roof lines in order to break up the massing of the building. Entrances to the building would be easily identified by archways and windows. The building would include a variety of building materials and colors. The overall color palette would include off-whites, beiges, and browns. Windows and doorways would be provided along each side of the building.

Landscaping

Landscaping would be provided along the perimeter of the Project site. Landscaping would consist of hedges, vines and berms for screening, grasses, large and small accent shrubs, and other small and medium plantings. Approximately 226 trees of various types and sizes would also be provided along the perimeter of the site. Additionally, a grass area with a bench and picnic table would be provided in the northeastern corner of the site. This area would be landscaped with various trees and shrubs. Landscaping and trees would be used to screen the warehouse building and associated infrastructure, such as the trash enclosure.

CIRCULATION AND TRANSPORTATION

Regional access to the Project area is provided by the I-605 Freeway to the west, I-10 Freeway to the south, and the I-210 Freeway to the north. Key north-south roadways providing local access include Irwindale Avenue, Vincent Avenue, and Lark Ellen Avenue. Key east-west roadways providing local access include Gladstone Street, Arrow Highway, and Cypress Street.

Access to the Project site would be provided at two locations: one entrance off Vincent Avenue in the southeastern corner of the site, and another entrance off Vincent Avenue in the northeastern corner of the site. Each of these access points allow for emergency vehicle access. As part of the Project, Vincent Avenue along the Project site's frontage would be improved to its ultimate half-section width, including landscaping and parkway improvements, as required by the City of Irwindale. The improvements would provide continuous sidewalks adjacent to the site that would connect to existing sidewalks within the area. Bicycle parking would also be provided.

The site plan includes 199 standard parking stalls and 181 trailer stalls, which would be provided along the perimeter of the site. The trailer parking stalls would be located along the western and eastern boundaries of the site, while the standard parking stalls would be located along the northern and southern boundaries. Two gates would be provided: one near the northwestern corner of the site, and one near the southwestern corner of the site.

The Project area is served by Foothill Transit and Baldwin Park Transit. Foothill Transit Routes 185/272/492 and the Baldwin Park Teal Line provide transit service along parts of Live Oak Avenue, Baldwin Park Boulevard, Arrow Highway, and Irwindale Avenue. The nearest transit stop is Foothill Transit Route 492 located at the intersection of Vincent Avenue/Arrow Highway approximately 300 feet from the Project site.

UTILITIES

The proposed Project would connect to existing City infrastructure to provide water, sewer, and storm drainage utilities. Existing storm drain, sewer, water, and gas lines/pipes are currently located along Vincent Avenue and Allen Drive. Additionally, storm water facilities (i.e., storm drains and storm drain catch basins) currently exist at the existing industrial park area located immediately north of the site.

Wastewater

The Sanitation Districts of Los Angeles County provides all of Irwindale's sewer services. The majority of the City is served by Sanitation District 22; with a small portion of its southwestern area served by District 15. It is anticipated that Sanitation District 22 would serve the proposed Project. Wastewater for areas served by Sanitation District 22 is treated at the San Jose Creek Water Reclamation Plan (WRP). The District's trunk sewer lines extend throughout the City, with no under-served areas. The Los Angeles County Sewer Maintenance District, located in Alhambra, provides maintenance for the City's six miles of sewers on a contract basis, including emergency services on a 24-hour basis.

The proposed Project would connect to existing City infrastructure to provide sewer service. Existing sewer lines are currently located along Vincent Avenue and Allen Drive. Eight-inch sewer lines would be extended from Allen Drive east to the Project site. A 48-inch sewer manhole would be constructed near the Allen Drive and Central Street intersection.

Storm Drainage

The Project would provide an on-site drainage system consisting of a 48-inch storm drain manhole, a 36-inch by 36-inch catch basin, an 18-inch by 18-inch catch basin, curb drains, and infiltration/detention systems. Biofiltration systems with liners and underdrains would be located around the site perimeter, as well as proprietary high-flow devices. An underground detention system would also be used to mitigate peak flows. Any excess flow would be routed off-site via a 30-inch storm drain pipe prior to ultimately discharging to an existing 90-inch storm drain pipe which is owned and maintained by the Los Angeles County Flood Control District.

Water

The proposed Project would connect to existing City infrastructure to provide water service. Existing water lines are currently located along Vincent Avenue and Allen Drive. These lines would be extended into and loop around the perimeter of the project site. Domestic and irrigation water lines and meters would be provided. A water line for fire services and a fire hydrant would also be provided. The fire hydrant would be provided near the northeastern corner of the site.

Natural Gas and Electricity

Electricity would be provided by Southern California Edison and natural gas will be provided by the Southern California Gas Company.

CONSTRUCTION PHASING

Construction of the Project would occur in the following five phases, and is assumed to occur five days per week:

- Site Preparation: 4/1/2021-4/28/2021 (20 days)
- Grading: 4/29/2021-6/30/2021 (45 days)
- Building Construction: 7/1/2021-3/8/2023 (440 days)
- Paving: 3/9/2023-4/26/2023 (35 days)
- Architectural Coating: 9/1/2022-4/26/2023 (170 days)

GENERAL PLAN AND ZONING

The Project site is designated as "Industrial/Business Park" and "Residential" by the City's General Plan Land Use Map (Figure 2.0-6) and is zoned as M-2 “Heavy Manufacturing” (Figure 2.0-7). As shown in Figure 2.0-6 and discussed above, the Project applicant is requesting a General Plan Amendment to change the current designation from "Residential" to "Industrial/Business Park" for a 6.93-acre portion of APN 8417-034-016. The Project site is also subject to the Irwindale Commercial & Industrial Design Guidelines.

2.5 PROJECT GOALS AND OBJECTIVES

Consistent with CEQA Guidelines Section 15124(b), a clear statement of objectives and the underlying purpose of the proposed Project shall be discussed. The principal objective of the proposed Project is the approval and subsequent development of the 26.05-acre parcel for Industrial uses. The quantifiable objectives of the proposed Project include the development of 26.05 acres with a 545,735 sf industrial warehouse building.

The proposed Project identifies the following objectives:

- Quantified Development: Development of land use densities and intensities at quantities that maximize the use of the land as a single development to meet the demands of the market while considering zoning and land uses restrictions. The quantifiable objectives include the development of approximately to 26.05 acres with a 545,735 square-foot industrial warehouse that provides employment-generating development.
- Economic Contribution: Strengthen the City’s economic base through Project’s job creation; development related investment; disposable income from future employees; and increased property, sales, and transient occupancy taxes.
- Employment Opportunities: Provide for local and regional employment opportunities that take advantage of the areas high level of accessibility, allow for the expansion of the City’s economic base, help create a jobs/housing balance, and reduce the commute for local residents.
- Public Facilities and Services: Provide infrastructure and services that meet City standards, integrate with existing and planned facilities and connections and do not diminish services to existing residents of the City.
- Marketable High Cube Warehouse: Provide for the construction of a high-cube warehouse facility that could attract a variety of end users, including transload facility, short-term storage facility, light industrial, and/or manufacturing uses. The facility should be designed with efficient transportation access and circulation within the site, accessible loading bays on two sides of the building, and a high level of on-site automation and logistics management to enable highly-efficient processing of goods through the high-cube warehouse.
- End User Restrictions: Restrict the use of the warehouse building such that no business would be able to operate a fulfillment center, parcel hub, or cold storage facility. The intent of this restriction is to minimize the potential air quality impacts from such end users.
- Buffer Surrounding Uses: Provide a landscaped buffer with sound attenuation along Vincent Avenue to buffer neighboring uses.

- Redevelopment of the Manning Pit: With the completed remediation and closure of the Manning Pit, provide for redevelopment of the site in accordance with the General Plan, such that the site can be utilized in a manner that provides jobs and provides a tax base for the community.

2.6 USES OF THE EIR AND REQUIRED AGENCY APPROVALS

This EIR may be used for the following direct and indirect approvals and permits associated with adoption and implementation of the proposed Project.

CITY OF IRWINDALE

The City of Irwindale will be the Lead Agency for the proposed Project, pursuant to the State Guidelines for Implementation of the California Environmental Quality Act (CEQA), Section 15050. Actions that would be required from the City include, but are not limited to, the following:

- Adoption of the Environmental Impact Report (EIR);
- Adoption of the Findings of Fact, Statement of Overriding Considerations, and Mitigation Monitoring and Reporting Program (MMRP);
- Site Plan and Design Review (Discretionary Application) to approve the proposed site plan, which includes site configuration, design, location, and impact of the proposed use, and the compliance of the Project with the established Zoning Code standard and the "City of Irwindale Commercial and Industrial Design Guidelines";
- General Plan Amendment to approve the change of the current General Plan designation from "Residential" to "Industrial/Business Park" for a portion of APN 8417-034-016; and
- Approval of the Lot Line Adjustment to combine APNs 8417-034-015 and 8417-034-016;

OTHER GOVERNMENTAL AGENCY APPROVALS

The following agencies may be required to issue permits or approve certain aspects of the proposed Project. Other governmental agencies that may require approval include, but are not limited to, the following:

- Regional Water Quality Control Board (RWQCB) – Construction activities would be required to be covered under the National Pollution Discharge Elimination System (NPDES);
- RWQCB – The Storm Water Pollution Prevention Plan (SWPPP) would be required to be approved prior to construction activities pursuant to the Clean Water Act;
- South Coast Air Quality Management District (SCAQMD) – Construction activities would be subject to the SCAQMD permits, codes, and requirements.

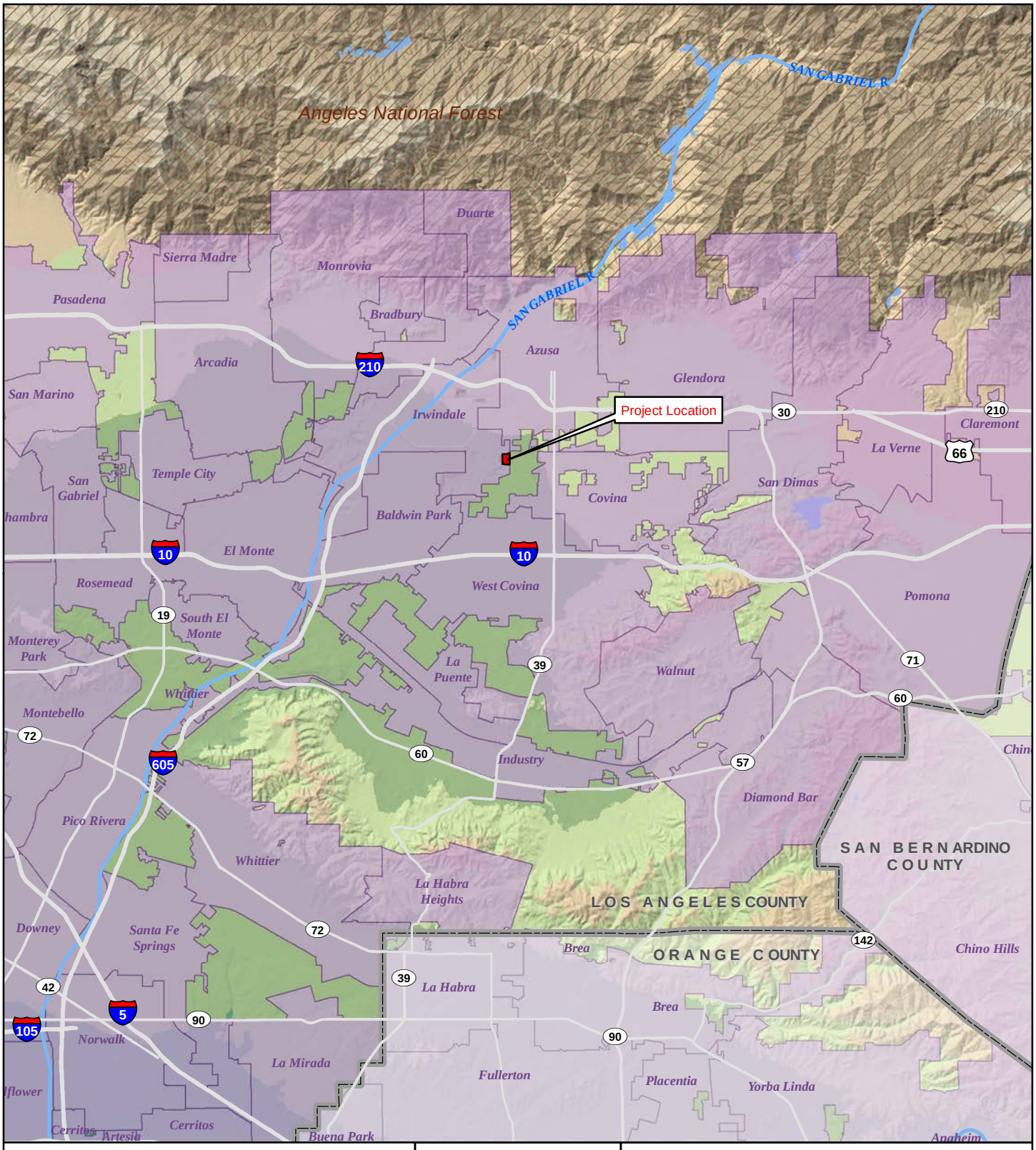

Legend

- Project Boundary
- City Areas
- County Boundary
- National Forest

Sources: CalAtlas; Los Angeles County; Orange County; San Bernardino County. Map date: May 14, 2018.

N

0 1 2

Miles

CITY OF IRWINDALE
5175 VINCENT AVENUE

Figure 2.0-1. Regional Location Map

De Novo Planning Group
A Land Use Planning, Design, and Environmental Firm

This page intentionally left blank.

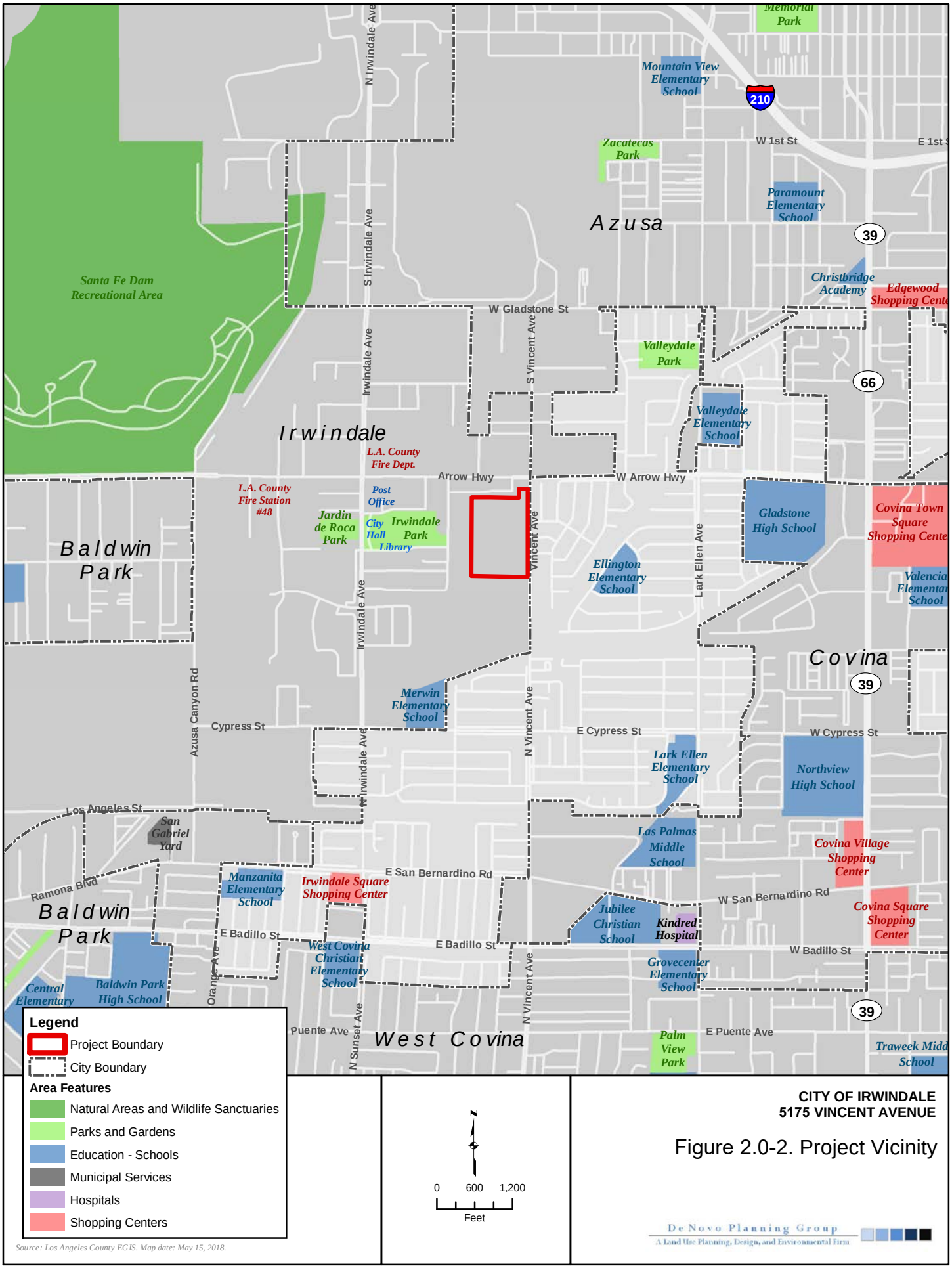

Source: Los Angeles County EGIS. Map date: May 15, 2018.

CITY OF IRWINDALE
5175 VINCENT AVENUE

Figure 2.0-2. Project Vicinity

De Novo Planning Group
A Land Use Planning, Design, and Environmental Firm

This page intentionally left blank.



Legend

Project Boundary

0 100 200
Feet

Source: Los Angeles County; ArcGIS Online World Imagery Map Service. Map date: May 14, 2018.

CITY OF IRWINDALE
5175 VINCENT AVENUE

Figure 2.0-3. Aerial View of Project Site

De Novo Planning Group
A Land Use Planning, Design, and Environmental Firm

This page intentionally left blank.

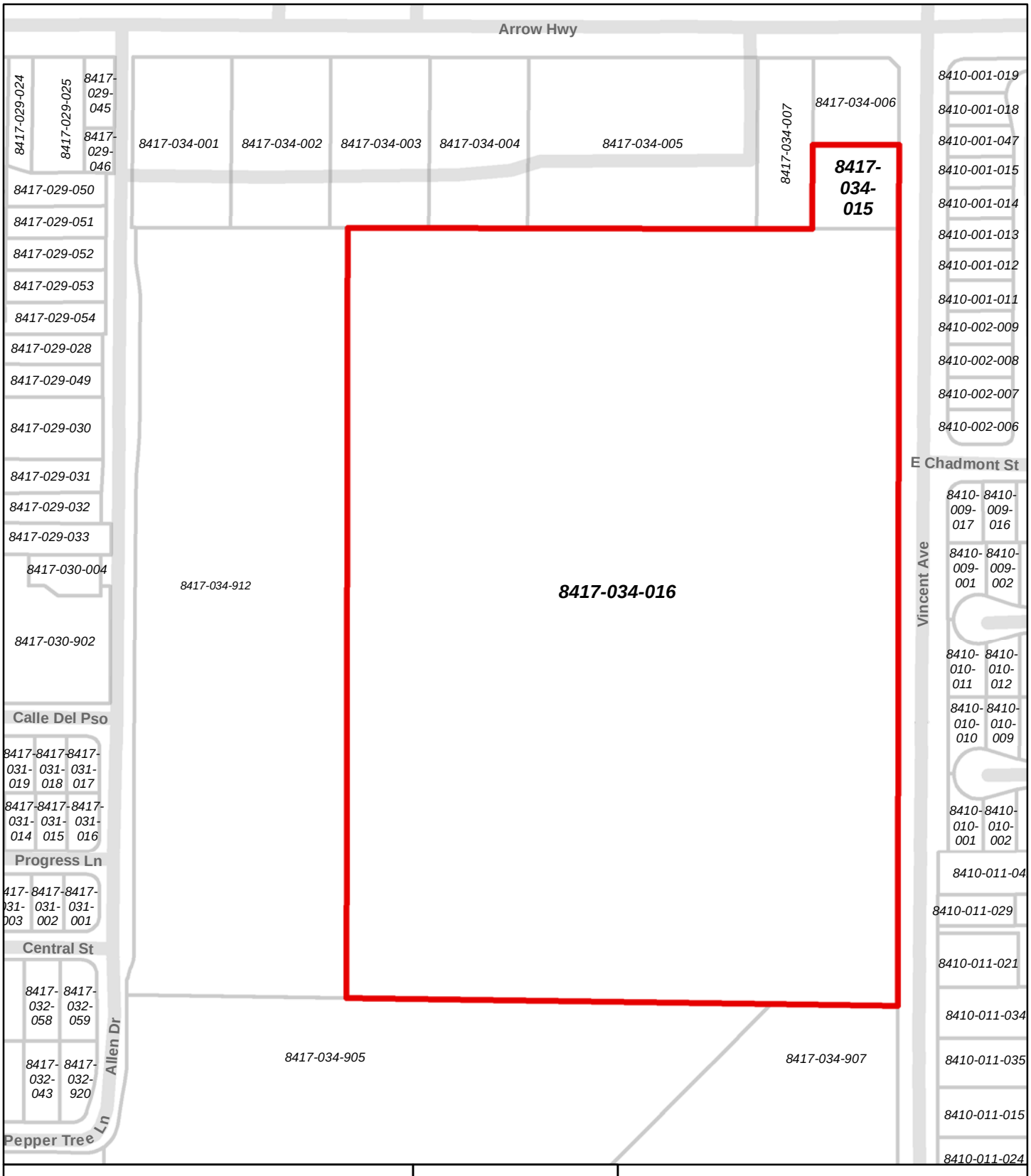

Legend

Project Boundary

Assessor Parcel Boundary

N

0 100 200

Feet

Source: Los Angeles County EGIS; Office of the Assessor, County of Los Angeles. Map date: May 14, 2018.

CITY OF IRWINDALE
5175 VINCENT AVENUE

Figure 2.0-4. Assessor's Parcel Map

De Novo Planning Group
A Land Use Planning, Design, and Environmental Firm

This page intentionally left blank.

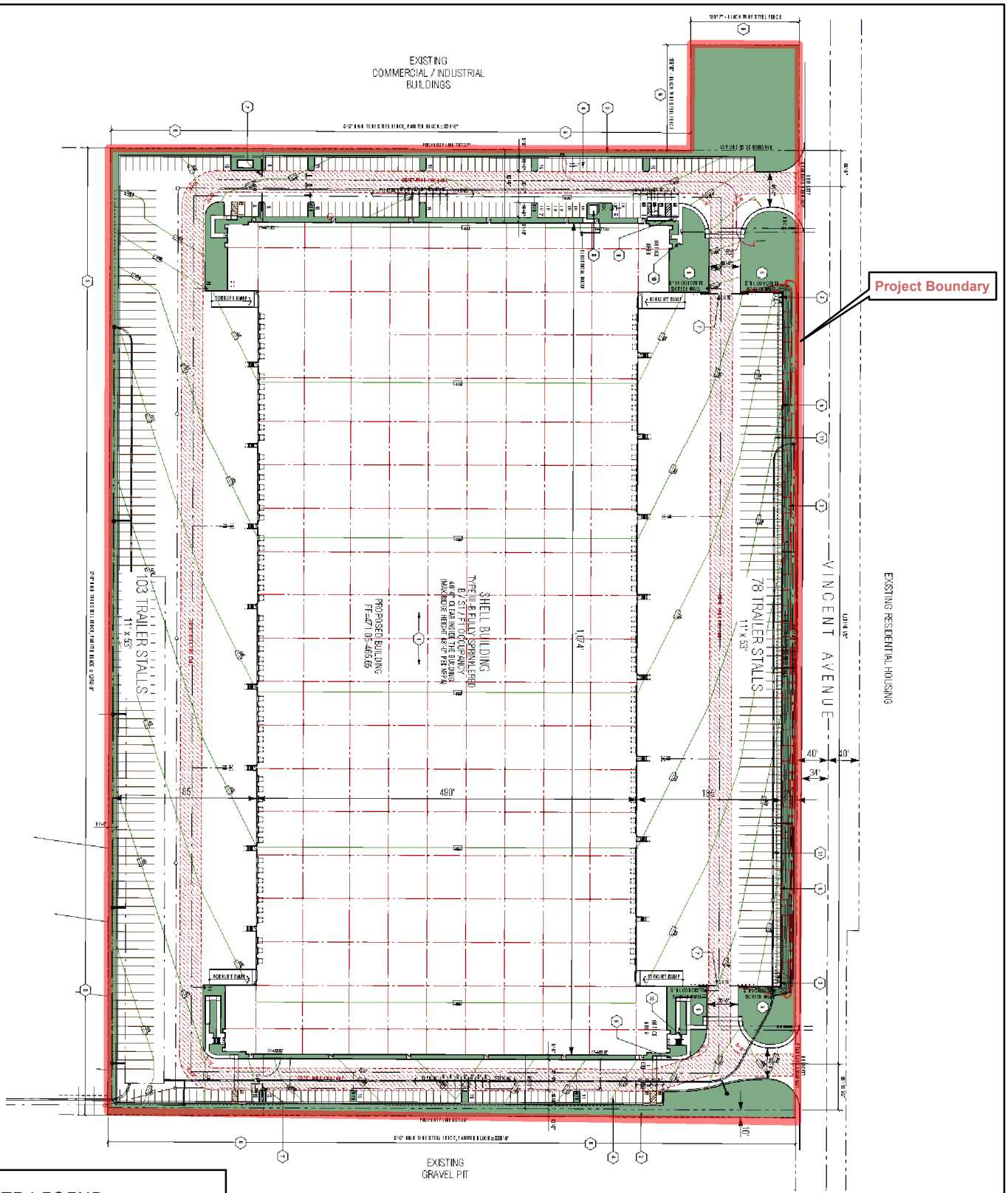

SITE LEGEND:

- ON-SITE LANDSCAPED AREA
- OFF-SITE LANDSCAPED AREA
- SITE PROPERTY LINES
- CITY CURB AND GUTTER
- LINES STREET CENTERLINES
- ON-SITE CURB LINES
- ON-SITE PARKING

N

0 50 100

Feet

CITY OF IRWINDALE
5175 VINCENT AVENUE

Figure 2.0-5. Site Plan

Source: RGA Office of Architectural Design, Site Plan-Warehouse Use. Map date: May 15, 2018.

This page intentionally left blank.

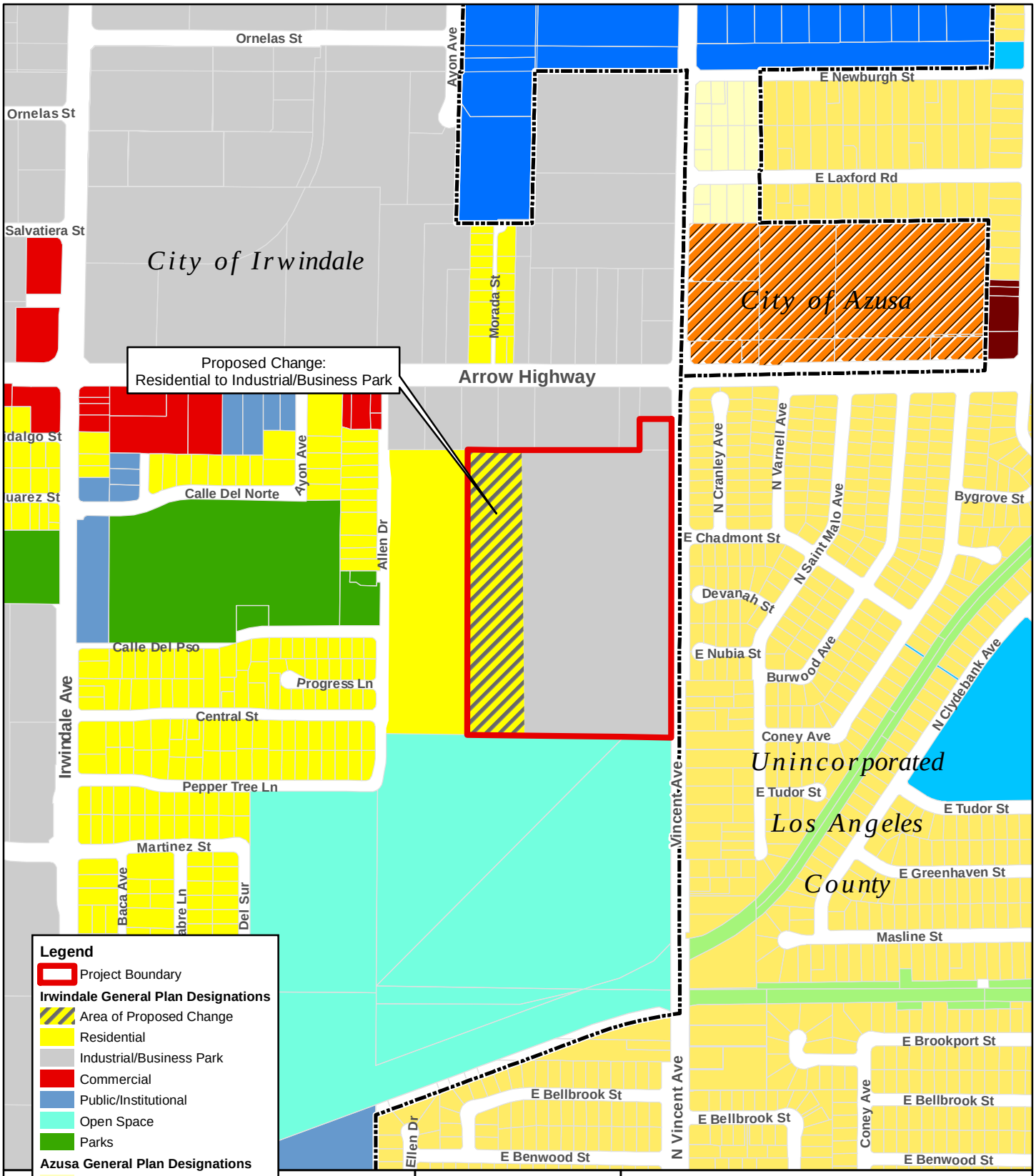

Source: Los Angeles County; Irwindale General Plan; Azusa General Plan. Date: 5/14/18.

CITY OF IRWINDALE
5175 VINCENT AVENUE

Figure 2.0-6. Existing and Proposed General Plan Land Use Map

De Novo Planning Group
A Land Use Planning, Design, and Environmental Firm

This page intentionally left blank.

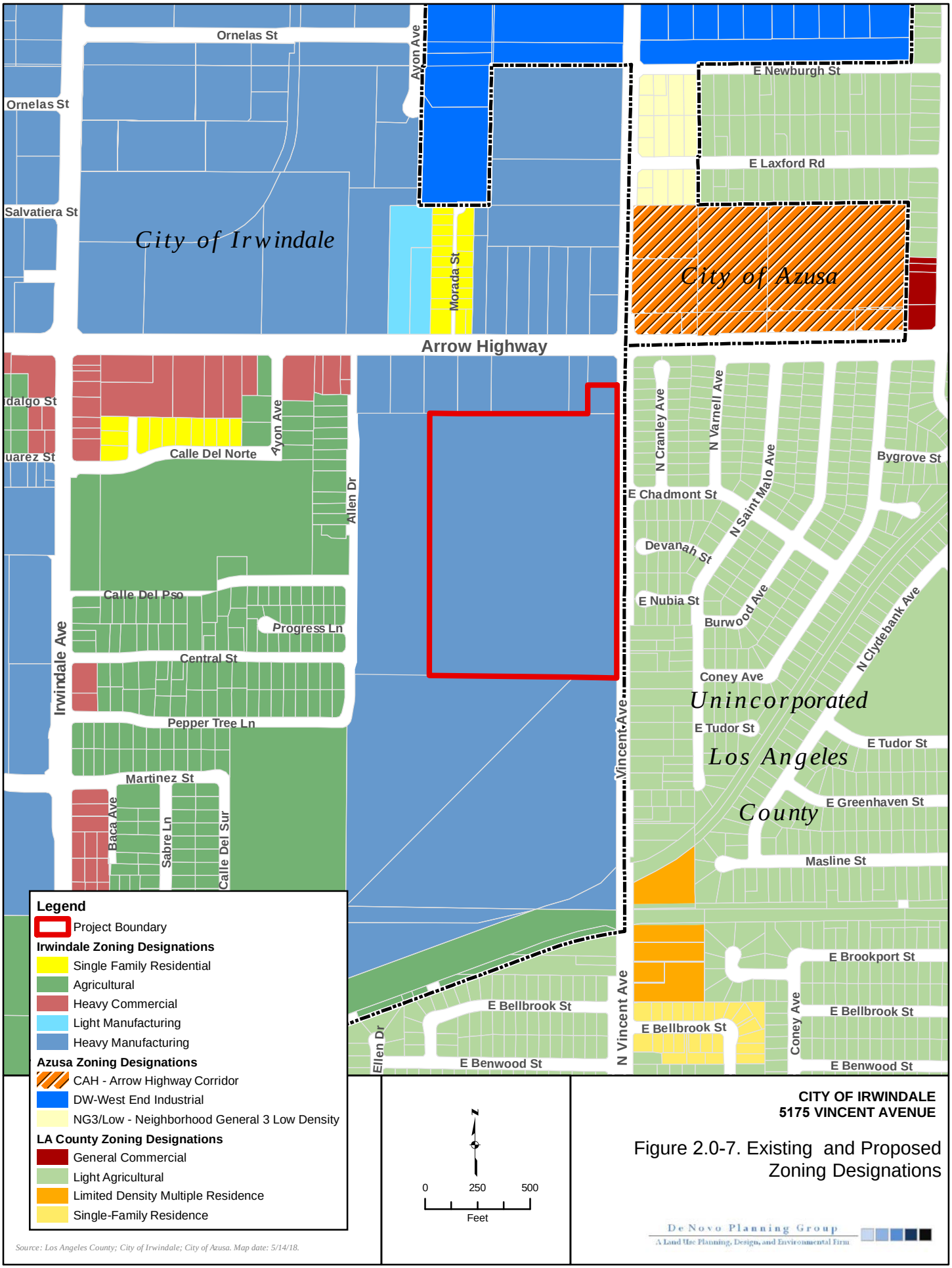

Source: Los Angeles County; City of Irwindale; City of Azusa. Map date: 5/14/18.

CITY OF IRWINDALE
5175 VINCENT AVENUE

Figure 2.0-7. Existing and Proposed Zoning Designations

De Novo Planning Group
A Land Use Planning, Design, and Environmental Firm

This page intentionally left blank.

This section provides an overview of the visual character, scenic resources, views, and sources of light and glare that are encountered on the Project site and the vicinity. This section concludes with an evaluation of the impacts and recommendations for mitigating impacts. Information in this section is derived primarily from the City of Irwindale General Plan Update (2008), Draft Environmental Impact Report (State Clearinghouse No. 2005071047) – City of Irwindale General Plan (2006), City of Irwindale Municipal Code (current through March 2019), and City of Irwindale Commercial and Industrial Design Guidelines (2009).

There were no comments received during the NOP comment period related to this environmental topic.

As discussed in the Initial Study for the Project, the Project site is not located within view of a state scenic highway. The nearest highway subject to this program is State Route (SR) 2, an Officially Designated State Scenic Highway, located approximately 4.0 miles north of the Project site. Therefore, the proposed Project would not substantially damage scenic resources, including, but not limited to, trees, rock outcroppings, and historic buildings within a state scenic highway. Implementation of the proposed Project would have no impact relative to this topic. This topic does not warrant additional analysis and will not be addressed further in the EIR. The Initial Study is included in Appendix A of this Draft EIR.

3.1.1 ENVIRONMENTAL SETTING

REGIONAL SCENIC RESOURCES

Visual resources are generally classified into two categories: scenic views and scenic resources. Scenic views are elements of the broader viewshed such as mountain ranges, valleys, and ridgelines. They are usually mid-ground or background elements of a viewshed that can be seen from a range of viewpoints, often along a roadway or other corridor. Scenic resources are specific features of a viewing area (or viewshed) such as trees, rock outcroppings, and historic buildings. They are specific features that act as the focal point of a viewshed and are usually foreground elements.

Aesthetically significant features occur in a diverse array of environments within the region, ranging in character from urban centers to rural agricultural lands to natural water bodies. Features of the built environment that may also have visual significance include individual or groups of structures that are distinctive due to their aesthetic, historical, social, or cultural significance or characteristics. Examples of the visually significant built environment may include bridges or overpasses, architecturally appealing buildings or groups of buildings, landscaped freeways, and a location where a historic event occurred.

Major regional scenic resources in the area include the San Gabriel River and San Gabriel Mountains. The San Gabriel River extends from the base of the San Gabriel Mountains all the way to the Pacific Ocean. The river includes a popular recreation trail, which travels through a diverse landscape. In the south, the trail follows the channelized river past a mix of industrial and residential surroundings, while the northern portion opens up to scenic vistas of the surrounding mountains. The trail and

river—left to its natural course in the north—also passes through scenic protected areas here, including the Santa Fe Dam Recreation Area and Whittier Narrows. The San Gabriel Mountains are a mountain range located in northern Los Angeles County with its highest peak at above 8,900 feet above sea level. The mountain range is part of the Transverse Ranges and lies between the Los Angeles Basin and the Mojave Desert, with Interstate 5 to the west and Interstate 15 to the east. This range lies in, and is surrounded by, the Angeles National Forest, with the San Andreas Fault as the northern border of the range. In the winter, snowboarding and skiing are quite popular in the San Gabriel Mountains. In the summer, canyoneering, hiking, backpacking, picnicking and camping are some of the activities popular with visitors

Project Site

The Project site is located in the City of Irwindale, which is situated in the northern portion of the San Gabriel Valley. The City of Irwindale is located within a relatively flat area of the Los Angeles Basin south of the San Gabriel Mountain range, north of the Puente Hills, and northeast of the Montebello Hills. The San Gabriel River traverses the central portion of the City of Irwindale in a northeast to southwest orientation.

The Project site is located within the southeastern corner of the City of Irwindale, north of a Los Angeles County-owned pit, east of Allen Drive, south of Arrow Highway, and west of Vincent Avenue in Irwindale, California. The Project site totals approximately 26.05 acres and is comprised of two vacant parcels; one of which is an undeveloped, recently filled, former aggregate mine pit known as the Manning Pit. Figures 2.0-1 and 2.0-2 in Chapter 2.0, Project Description, illustrate the regional location and Project vicinity.

The Project site is surrounded by a variety of designated undeveloped and existing developed land uses. The industrial services and retail uses to the north of the Project site (along Arrow Highway) are designated Industrial in the Irwindale General Plan. The parcel to the south of the Project site, a Los Angeles County owned mining pit, is currently undeveloped. The area immediately adjacent west of the Project site, east of Allen Drive, contains vacant land formerly a part of the Manning Pit. Single family residential uses are currently developed west of Allen Drive. The area east of the site, opposite Vincent Avenue, is developed with single family residences.

The existing site conditions and surrounding area are shown in Figures 3.1-4a, 3.1-1b, and 3.1-1c. The Project site is a former mining pit and contains no existing light sources on the site. The adjacent parcels to the east and west located along Vincent Avenue and Allen Drive, respectively, are predominately single family residential and include minimal outdoor lighting. Other existing lighting in the vicinity of the Project site includes: lighting from industrial uses to the north of the Project site and street lighting along Vincent Avenue. The Los Angeles County mining pit is located immediately south of the Project site and contains no existing light sources. The City's General Plan Update identifies the San Gabriel River as the major topographic feature in the City's planning area. The San Gabriel River traverses the City in a northeast–southwest orientation with the foothills of the nearby San Gabriel Mountains located to the north. The Project site is located within a developed industrial

and residential area where existing development and landscaping limits the availability of long, broad views of the San Gabriel River and the San Gabriel Mountains.

From Vincent Avenue and Allen Drive there are distant views of the San Gabriel Mountains, however, views are limited and partially obstructed by existing development in the surrounding urbanized area. These views also occur from within the Project site but are also obstructed by existing surrounding development within the urbanized area. Foreground views from the Project site consist primarily of existing development of the surrounding area. Views into the site from the surrounding area are also limited and obstructed from existing urbanized development. Views of the site from Arrow Highway are primarily obstructed from existing development on Arrow Highway. Views immediately adjacent to the site along Vincente Avenue are unobstructed and the entire site is readily visible.

3.1.2 REGULATORY SETTING

STATE

Nighttime Sky – Title 24 Outdoor Lighting Standards

The California legislature passed a bill in 2001 requiring the California Energy Commission (CEC) to adopt energy efficiency standards for outdoor lighting for both the public and private sectors. In addition to improved energy efficiency standards, Title 24 standards regulate lighting characteristics such as maximum power and brightness, shielding, and sensor controls to turn lighting on and off. Different lighting standards are set by classifying areas by lighting zone. The classification is based on population figures of the 2010 Census. Areas can be designated as LZ1 (dark), LZ2 (rural), or LZ3 (urban). Lighting requirements for dark and rural areas are stricter in order to protect the areas from new sources of light pollution and light trespass.

LOCAL

City of Irwindale General Plan

The City of Irwindale General Plan includes several policies that are relevant to an evaluation of the visual quality of the Project site. General Plan policies and implementation measures applicable to the Project are identified below:

POLICIES: COMMUNITY DEVELOPMENT ELEMENT

- **Policy 2.** The City of Irwindale will continue to plan for the transition of the quarries located within the City to other land uses.
- **Policy 3.** The City of Irwindale will continue to ensure that the type, location, and intensity of all new development and intensified developments adhere to the requirements that are specified for their particular land use category in the General Plan.

- **Policy 12.** The City of Irwindale will continue to promote quality design in the review and approval of commercial and industrial development through the application of the commercial and industrial design guidelines.
- **Policy 13.** The City of Irwindale will continue to employ a design theme in the review of future commercial and industrial development and in the rehabilitation of existing commercial and industrial uses.
- **Policy 14.** The City of Irwindale will continue to promote property maintenance in all areas of the City.
- **Policy 15.** The City of Irwindale will continue to work towards improving the appearance of the City entryways.
- **Policy 16.** The City of Irwindale will continue to work towards the development of streetscape, sign standards, and a Public Art Program.
- **Policy 17.** The City of Irwindale will continue to encourage a balance of commercial uses to avoid an overconcentration of uses to best serve the residents, employee population, and business community.

City of Irwindale Commercial and Industrial Design Guidelines

The City of Irwindale Commercial and Industrial Design Guidelines are intended to establish general design characteristics and a broad framework for the physical form and use of commercial and industrial buildings in the City of Irwindale. The primary emphasis of the Site Design Principles is the interrelationships of buildings and public spaces, while specific design characteristics of individual structures are addressed in the Building Design Principles. The purpose of these guidelines is to ensure the successful integration of commercial and industrial projects and develop a more aesthetically and functionally cohesive community.

City of Irwindale Zoning Ordinance

Chapter 17.70, *Site Plan and Design Review*, of the City Zoning Ordinance contains standards and provisions related to site design that would apply to the proposed Project. The purpose of site plan and design review is to ensure that proposed development in the City is in conformity with the intent and provisions of this title and to guide City departments in the issuance of permits. In addition, it is the purpose of this chapter to ensure that proposed development is compatible with surrounding development in terms of scale, style and construction materials; that on and off-site circulation is adequate to support the Project; that City services are adequate and available; that projects are of the highest quality of land planning and design, and that projects reflect the design themes of the community and are consistent with the City's General Plan and land use and planning, all in an effort to protect the health, safety and welfare of the community and to enhance the development, use, occupancy, health, safety and welfare of surrounding areas for residential, commercial or industrial uses or purposes.

3.1.3 IMPACTS AND MITIGATION MEASURES

THRESHOLDS OF SIGNIFICANCE

Consistent with Appendix G of the CEQA Guidelines, the proposed Project will have a significant impact on aesthetics if it will:

- Have a substantial adverse effect on a scenic vista;
- In nonurbanized areas, substantially degrade the existing visual character or quality of public views of the site and its surroundings. (Public views are those that are experienced from publicly accessible vantage point). In an urbanized area, conflict with applicable zoning and other regulations governing scenic quality;
- Create a new source of substantial light or glare which would adversely affect day or nighttime views in the area.

IMPACTS AND MITIGATION MEASURES

Impact 3.1-1: Project implementation would not result in substantial adverse effects on a scenic vista (Less than Significant)

The Project site is not designated as a scenic vista by the City of Irwindale General Plan or the Los Angeles County General Plan, nor does it contain any unique or distinguishing features that would qualify the site for designation as a scenic vista. The Project site is located in an urbanized area. According to the City's General Plan, there are no scenic vistas within the Project area. The San Gabriel Mountains, located approximately 20 miles to the north of the Project site, are an important part of the local scenery. However, views of the San Gabriel Mountains from the Project site are limited and obstructed by existing surrounding urban development. Limited distant views of the San Gabriel mountains are available from the Project site and roadways adjacent to the Project site. They occur in the background with foreground and middleground views consisting of development immediately adjacent to the Project site and within the surrounding area. Additionally, existing views in this urban and developed area are limited.

There is no unique or distinguishing visual or aesthetic characteristic of the Project site, aside from the open space nature of the undeveloped former mining pit. The undeveloped former mining pit can provide visual relief to a passerby/viewer from common manmade structures and visual obstructions found in an urban environment. The Project site's aesthetic value can be attributed to its openness and undeveloped nature, which contrasts the industrial nature to the north. However, throughout the years, the Project site appears to remain barren (dead grassland) and absent of vegetation due to frequency of soil disturbance through excavation and hauling of materials from the Project site over the last several decades.

The Project site contains fill material and would be essentially flat once the grading activities are complete. As a result of site disturbance associated with previous mining operations, limited natural scenic areas can be found within the Project site. There is little native vegetation or naturalized

habitat located on the site, and the previous mining operations and remediation of the site soils render the site essentially void of prominent natural visual features.

The Project site is visible from Vincent Avenue and from the northern portion of Allen Drive. Views of the Project site are obstructed by the development that occurs on Arrow Highway, north of the Project site. Implementation of the proposed Project would change the existing visual character of the site from a former mining pit site to an urbanized site. Impacts related to a change in visual character are largely subjective and very difficult to quantify. People have different reactions to the visual quality of a project or a project feature, and what is considered "attractive" to one viewer may be considered "unattractive" to other viewers.

Visual simulations of the proposed warehouse buildings are shown in Figures 3.1-1a, 3.1-1b, and 3.1-1c. As shown, the proposed warehouse building would include articulations and varied roof lines in order to break up the massing of the building. Entrances to the building would be easily identified by archways and windows. The building would include a variety of building materials and colors. The overall color palette would include off-whites, beiges, and browns. Windows and doorways would be provided along each side of the building.

Landscaping would be provided along the perimeter of the Project site. Landscaping would consistent of hedges, vines and berms for screening, grasses, large and small accent shrubs, and other small and medium plantings. Approximately 226 trees of various types and sizes would also be provided along the perimeter of the site. Additionally, a grass area with a bench and picnic table would be provided in the northeastern corner of the site. This area would be landscaped with various trees and shrubs. Landscaping and trees would be used to screen the warehouse building and associated infrastructure, such as the trash enclosure.

These improvements are consistent with the landscaping and material requirements established in the City's Design Guidelines and the City's design review ordinance (Chapter 17.70 – Site Plan and Design Review). There are no proposed structures over 45 feet high that would impede views of the surrounding areas from the Project vicinity.

While implementation of the proposed Project would change the existing visual character of the site, it would not result in substantial adverse effects on a designated scenic vista and the views of the San Gabriel Mountains would still be intact. Development within the Project site is required to be consistent with the General Plan and the Irwindale Zoning Ordinance, which includes design standards in order to ensure quality and cohesive design of the Project site. These standards include specifications for building height, massing, and orientation; exterior lighting standards and specifications; and landscaping standards. Implementation of the design standards would ensure quality design throughout the Project site, and result in a Project that would be internally cohesive while maintaining aesthetics similar to surrounding uses.

The City of Irwindale General Plan includes goals and policies designed to protect visual resources and promote quality design in urban areas. The proposed Project would be subject to the policies and goals of the Irwindale General Plan, Commercial and Industrial Design Guidelines, as well as the

City's design review process. As described in the City's Design Review Guidelines, the purpose of these guidelines is to ensure the successful integration of commercial and industrial projects with the City. These guidelines are supplemental to, but equally enforceable under the City's design review ordinance (Chapter 17.70 – Site Plan and Design Review).

Compliance with the Commercial and Industrial Design Guidelines and development standards for Irwindale's Zoning Districts for height and bulk, and landscaping requirements found in the Zoning code, would reduce visual impacts to the greatest extent feasible. While the proposed Project would permanently convert the vacant land to urbanized uses, the Project site is designated for and consistent with industrial and urban uses established by the General Plan. Therefore, this is considered a **less than significant** impact.

Impact 3.1-2: Project implementation would not conflict with an applicable zoning or other regulation governing scenic quality within an urbanized area. (Less than Significant)

The CEQA definition for an "Urbanized area" means a central city or a group of contiguous cities with a population of 50,000 or more, together with adjacent densely populated areas having a population density of at least 1,000 persons per square mile. In addition, to be considered an Urbanized area according to CEQA, projects must also be within the boundary of a map prepared by the U.S. Bureau of the Census which designates the area as urbanized area. According to the U.S. Bureau of the Census, the Project site is mapped and designated as urbanized area. In addition, the Project site is located within the City of Irwindale, which is located in the greater urban area of Los Angeles County, which has an estimated population of approximately 39 million people; meaning the Project site is within an urbanized area and subjected to applicable zoning or other regulation governing scenic quality. Future development of the Project site would convert the Project site from its existing state to an industrial warehouse.

While the proposed Project would result in a substantial alteration to the existing urban form and character of the site, the Project site is located in a developed and urbanized area of the City. The proposed Project would be subject to Chapter 17.70, *Site Plan and Design Review,* of the City's Zoning Code which contains standards and provisions related to site design and visual requirements; and the City's Commercial and Industrial Design Guidelines which includes architectural design principles and a provides criteria for evaluation of plans. The purpose of the site plan and design review ordinance is to ensure that proposed development in the City is in conformity with the intent and provisions of the ordinance. Compliance with the ordinance would ensure the proposed development is compatible with surrounding development in terms of scale, style and construction materials, is of the highest quality of land planning and design, reflects the design themes of the community, and is consistent with the City's General Plan and land use and planning.

Although development of the former mining pit with an industrial warehouse building will change the visual character of the site, compliance with the City's General Plan, Municipal Code, and Commercial and Industrial Design Guidelines would reduce visual impacts to the greatest extent feasible and ensure the Project would not conflict with zoning or other regulations governing scenic

quality. Design in accordance with these standards would reduce any potential impact to a less than a significant level.

Implementation of Mitigation Measures 3.1-1 would reduce potential impacts associated with applicable zoning or other regulations governing scenic quality within an urbanized area to a **less than significant** level.

Impact 3.1-3: Project implementation may result in light and glare impacts. (Less than Significant with Mitigation)

LIGHT IMPACTS

Development of the site with an industrial warehouse use would introduce lighting to the site that does not currently exist. Lighting would primarily consist of interior lighting within the building, security and landscape lighting surrounding the building, and security lighting along interior pedestrian walkways and within the parking areas. There are no specific lighting features within the proposed Project that would create unusual or significant impacts on adjacent uses associated with the lighting. The Project site is not located directly adjacent to residential uses or other sensitive receptors that would potentially be impacted as a result of new light sources within the Project site.

The industrial/business park uses immediately north of the Project site are the closest structures to the Project site. Residential uses occur to the west of the site, west of a vacant parcel and Allen Drive. These uses are approximately 382 feet from the site. Vincent Avenue forms the site's eastern boundary and currently experiences light associated with street lighting and vehicles traveling along the roadway. Residential uses are located approximately 100 feet from the site, east of Vincent Avenue and are separated by a block wall. Industrial/business park uses immediately adjacent to the northern portion of the Project site

The proposed Project would be subject to the City of Irwindale's Site Plan and Design Review process (Chapter 17.70 of the City's Municipal Code), which provides direction on appropriate Project lighting, location, mounting, direction, and standards to prevent adverse effect on surrounding properties. The proposed Project would also be designed consistent with the City's Commercial and Industrial Design Guidelines (2009), which contain standards to prevent light spillover onto adjacent property. Outdoor lighting would be installed in conformance with all City codes and ordinances, applicable safety and illumination requirements, and California Title 24 requirements. Proposed lighting would also be placed to ensure it illuminates only the intended areas and does not penetrate into residential communities or adjacent properties.

Compliance with the City's Municipal Code would reduce potential impacts associated with the introduction of lighting to the Project site. Through the design review and approval process, lighting proposed for the Project site would be reviewed to ensure spillover lighting onto adjacent properties would be minimized. Impacts would be reduced to a less than significant level.

Implementation of Mitigation Measures 3.1-1 would reduce potential impacts associated with nighttime lighting, glare and light spillage onto adjacent properties to a **less than significant** level.

MITIGATION MEASURE(S)

Mitigation Measure 3.1-1*: A lighting plan for the Project shall be prepared prior to the approval of the Site Plan. The lighting plan shall demonstrate that the lighting systems and other exterior lighting throughout the Project site has been designed to minimize light spillage onto adjacent properties to the greatest extent feasible, consistent with the Site Plan and Design Review requirements established in Chapter 17.70 of the City's Municipal Code.*

GLARE IMPACTS

Vehicle parking would occur along the perimeter of the Project site and could create new sources of glare. However, parked vehicles within the Project site would be screened from view by the painted concrete tilt-up screenwall proposed on the east elevation along Vincent Avenue. Parked vehicles along the south would abut an existing gravel pit and parked vehicles along the west would abut a vacant lot, which separates the Project site from Allen Drive and residential uses to the west. The northern portion of the site is adjacent to the rear of industrial/business park uses. Thus, due to the distance and uses adjacent to the Project site, significant impacts from the potential glare from parked vehicles within the site are not anticipated.

Stucco facades of neutral color are proposed on each exterior wall of the proposed warehouse. Stucco facades typically do not induce significant glare impacts. Painted metal doors are proposed separately for vehicle and pedestrian entrance into the warehouse, which may induce a limited source of glare within and directly adjacent to the Project site. Large windows of blue glass in an anodized aluminum storefront frame system are proposed at each corner of the proposed warehouse, along with horizontal/vertical windows along the facades of each exterior wall. Windows traditionally have the highest potential of resulting in glare impacts. Future tenant signage is proposed at the northeastern corner of the warehouse. The sign will be built in accordance to the City's sign permit regulations, which will reduce glare impacts from the sign within and directly adjacent to the Project Site. Downspouts and equipment auxiliary to the warehouse are proposed on the east and west elevations and will be external and painted to match the building. Landscaping is proposed along the perimeter of the site, which will further reduce glare impacts from the Project site by shielding vehicles and partial building facades from view. Other sources of glare within the Project site could also originate from the proposed parking lot surfaces and structures within the parking areas such as poles and signs. The proposed features and potential glare impacts would be consistent with those in an urbanized environment and would not significantly impact adjacent uses. The proposed Project would be required to comply with the City's Commercial and Industrial Design Guidelines, which includes material and design requirements to reduce glare impacts. Compliance with the City's Commercial and Industrial Design Guidelines would reduce potential glare impacts associated with proposed Project to a **less than significant** level.

This page intentionally left blank.

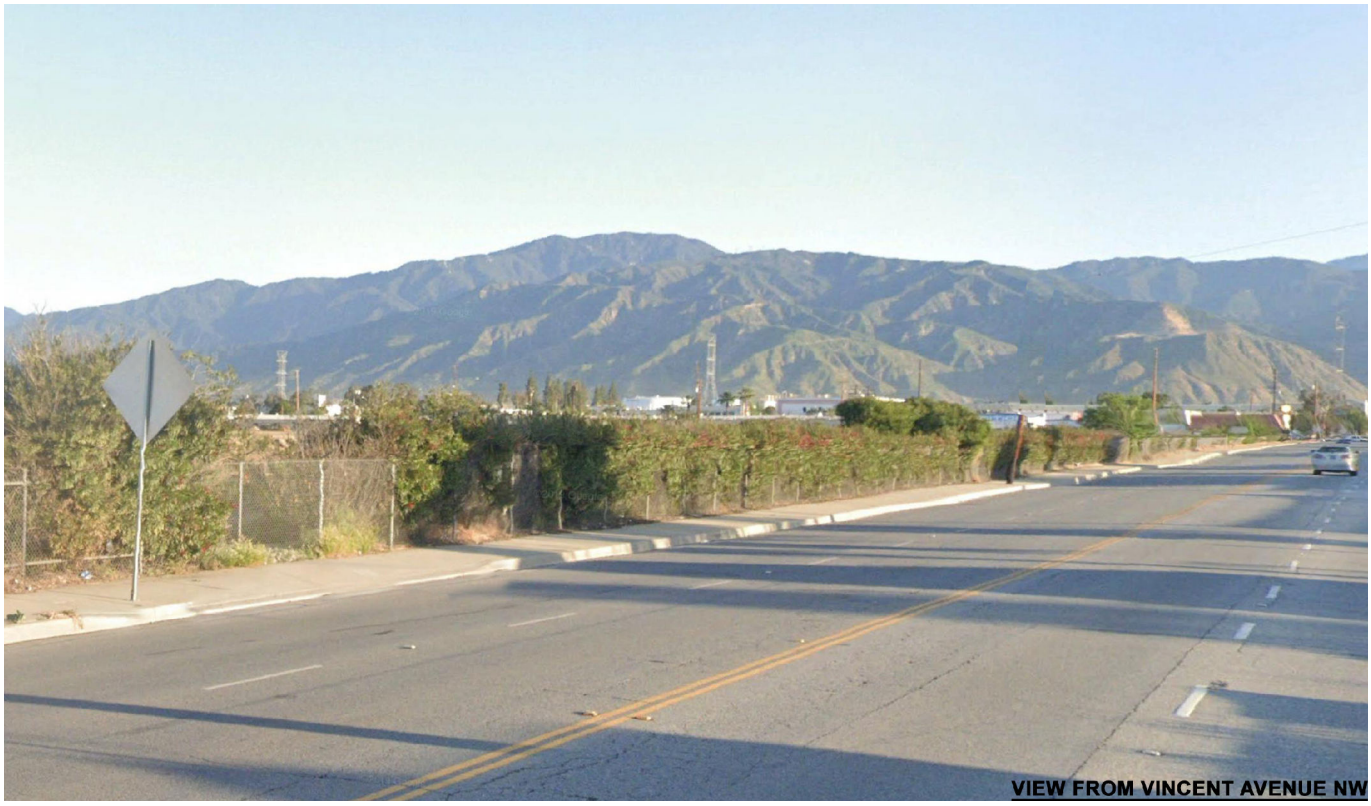



CITY OF IRWINDALE
SWC VINCENT AVENUE AND ARROW HIGHWAY

Figure 3.1-1a. Visual Simulations
From Vincent Avenue NW

Map date: August 17, 2020.

De Novo Planning Group
A Land Use Planning, Design, and Environmental Firm

This page intentionally left blank.





CITY OF IRWINDALE
SWC VINCENT AVENUE AND ARROW HIGHWAY

Figure 3.1-1b. Visual Simulations
From Vincent Avenue SW

Map date: August 17, 2020.

This page intentionally left blank.





CITY OF IRWINDALE
SWC VINCENT AVENUE AND ARROW HIGHWAY

Figure 3.1-1c. Visual Simulations
From Allen Drive W

Map date: August 17, 2020.

This page intentionally left blank.

The purpose of this section is to describe regional air quality, the current attainment status of the air basin, local sensitive receptors, emission sources, and the impacts that are likely to result from Project implementation. Following this discussion is an assessment of consistency of the proposed Project with applicable policies and local plans. This section is based in part on the following: Air Quality and Land Use Handbook: A Community Health Perspective (California Air Resources Board [CARB], 2005), Air Quality Analysis Handbook (Southern California Air Quality Management District [SCAQMD], 1993), Final 2016 Air Quality Management Plan (AQMP) (SCAQMD, 2017), 2016–2040 Regional Transportation Plan/Sustainable Communities Strategy (RTP/SCS) (Southern California Association of Governments [SCAG], 2016), California Emissions Estimator Model (CalEEMod) (v.2016.3.2) (CAPCOA, 2013), Vincent Avenue Industrial Building Traffic Impact Analysis (Ganddini Group, 2020), and South Coast Air Quality Management District (SCAQMD) Rules Book.

Comments were received during the public review period or scoping meeting for the Notice of Preparation regarding this topic from the following: CARB (March 10, 2020) and SCAQMD (March 10, 2020). Full comments received are included in Appendix A.

3.2.1 ENVIRONMENTAL SETTING

SOUTH COAST AIR BASIN

Irwindale is located within the South Coast Air Basin (SCAB or Basin). The Basin is regulated by the SCAQMD and consists of Orange County, the western portion of Los Angeles County, the southwestern portion of San Bernardino County, and the western portion of Riverside County. Air quality in this area is determined by such natural factors as topography, meteorology, climate, as well as existing air pollution sources and ambient conditions. These factors along with applicable regulations are discussed below. The combination of topography, low mixing height, abundant sunshine, and emissions from the second-largest urban area in the United States give the Basin the worst air pollution problem in the nation.

Climate, Topography, and Air Pollution Potential

Complex terrain and weather patterns make the region a natural sink for the accumulation of emissions and sustained high pollution levels. Along the coastal area, better air quality prevails because of the relatively mild climate, cooler temperatures, and a pattern of onshore airflow. However, in the inland portion of the Basin, a combination of abundant sunshine, warm temperatures, and poor vertical air mixing is conducive to the formation of ozone, commonly referred to as “smog.” The problem is further aggravated by the surrounding mountains that act together with the weather and air pollutant emissions.

The accumulation of smog is further heightened by the extent of exposure to elevated pollution levels. The Basin is the nation’s second largest urban area and California’s largest metropolitan region. The Basin is home to over 40 percent of the total State population, or about 16 million people, and over 10 million vehicles. Fifty thousand heavy duty diesel trucks travel nearly 10 million miles through the region annually, and well over 50,000 diesel engines are used to move goods and power construction and mining equipment.

Air quality for all pollutants in the Basin continues to improve, with recent years registering the lowest levels since measurements began over six decades ago. During the 1960s, maximum 1-hour concentrations were well above levels considered safe for public health – more than four times the current health standard. In recent times, the maximum measured concentrations are less than one-third of those peak concentrations. Moreover, long-term ozone air quality trends continue to show an overall improvement. The number of days above both the one and eight-hour standards has also declined dramatically.

Because of weather patterns and geography, residual pollution from the Basin is transported to several downwind air basins, including the Mojave Desert, the Salton Sea, the South-Central Coast, and San Diego Air Basins. As ozone precursor emissions in the Basin decrease over time, the transport impact on the downwind areas will also decline.

The majority of annual rainfall in the Basin occurs between November and April. Summer rainfall is minimal and is generally limited to scattered thunder showers in coastal regions and slightly heavier showers in the eastern portion of the Basin and along the coastal side of the mountains. Irwindale has a warm Summer Mediterranean climate with hot and dry summers and cool winters. The summer average high is 90°F (32°C) and the average low is 62°F (17°C). The winter average high in January is 68°F (20°C) and the average low is 43°F (6°C).

The Basin experiences a persistent temperature inversion (increasing temperature with increasing altitude) as a result of the Pacific high. This inversion limits the vertical dispersion of air contaminants, holding them relatively near to the ground. As the sun warms the ground and the lower air layer, the temperature of the lower air layer approaches the temperature of the base of the inversion (upper) layer until the inversion layer finally breaks, allowing vertical mixing with the lower layer. This phenomenon is observed in mid to late afternoons on hot summer days. Winter inversions frequently break by midmorning.

The combination of stagnant wind conditions and low inversions produces the greatest pollutant concentrations. On days of no inversion or high wind speeds, ambient air pollutant concentrations are lowest. During periods of low inversions and low wind speeds, air pollutants generated in urbanized areas are transported predominantly onshore into Riverside and San Bernardino counties. In the winter, the greatest pollution problem is the accumulation of CO and nitrogen oxides (NOx) due to low inversions and air stagnation during the night and early morning hours. In the summer, the longer daylight hours and the brighter sunshine combine to cause a reaction between hydrocarbons and NOx to form photochemical smog.

CRITERIA POLLUTANTS

All criteria pollutants can have human health and environmental effects at certain concentrations. The United States Environmental Protection Agency (USEPA) uses six "criteria pollutants" as indicators of air quality, and has established for each of them a maximum concentration above which adverse effects on human health may occur. These threshold concentrations are called National Ambient Air Quality Standards (NAAQS). In addition, California establishes ambient air quality standards, called California Ambient Air Quality Standards (CAAQS).

The ambient air quality standards for the six criteria pollutants (as shown in Table 3.2-1) are set to address public health and the environment within an adequate margin of safety (as provided under Section 109 of the Federal Clean Air Act [FCAA]). Epidemiological, controlled human exposure, and toxicology studies evaluate potential health and environmental effects of criteria pollutants, and form the scientific basis for new and revised ambient air quality standards. Principal characteristics and possible health and environmental effects from exposure to the six primary criteria pollutants generated by the Project are discussed below.

Ozone (O_3) is a photochemical oxidant and the major component of smog. While O_3 in the upper atmosphere is beneficial to life by shielding the earth from harmful ultraviolet radiation from the sun, high concentrations of O_3 at ground level are a major health and environmental concern. O_3 is not emitted directly into the air but is formed through complex chemical reactions between precursor emissions of volatile organic compounds (VOC) and oxides of nitrogen (NO_x) in the presence of sunlight. These reactions are stimulated by sunlight and temperature so that peak O_3 levels occur typically during the warmer times of the year. Both VOCs and NO_x are emitted by transportation and industrial sources. VOCs are emitted from sources as diverse as autos, chemical manufacturing, dry cleaners, paint shops, and other sources using solvents. Relatedly, reactive organic compounds (ROG) are defined as the subset of VOCs that are reactive enough to contribute substantially to atmospheric photochemistry.

The reactivity of O_3 causes health problems because it damages lung tissue, reduces lung function and sensitizes the lungs to other irritants. Scientific evidence indicates that ambient levels of O_3 not only affect people with impaired respiratory systems, such as asthmatics, but healthy adults and children as well. Exposure to O_3 for several hours at relatively low concentrations has been found to significantly reduce lung function and induce respiratory inflammation in normal, healthy people during exercise. This decrease in lung function generally is accompanied by symptoms including chest pain, coughing, sneezing and pulmonary congestion.

Studies show associations between short-term O_3 exposure and non-accidental mortality, including deaths from respiratory issues. Studies also suggest long-term exposure to O_3 may increase the risk of respiratory-related deaths (USEPA, 2019a). The concentration of O_3 at which health effects are observed depends on an individual's sensitivity, level of exertion (i.e., breathing rate), and duration of exposure. Studies show large individual differences in the intensity of symptomatic responses, with one study finding no symptoms to the least responsive individual after a 2-hour exposure to 400 parts per billion of ozone and a 50 percent reduction in forced airway volume in the most responsive individual. Although the results vary, evidence suggests that sensitive populations (e.g., asthmatics) may be affected on days when the 8-hour maximum O_3 concentration reaches 80 parts per billion (USEPA, 2019b). The average background level of O_3 in the California and Nevada is approximately 48.3 parts per billion, which represents approximately 77 percent of the total O_3 in the western region of the U.S. (NASA, 2015).

In addition to human health effects, O_3 has been tied to crop damage, typically in the form of stunted growth, leaf discoloration, cell damage, and premature death; it can also act as a corrosive and oxidant, resulting in property damage such as the degradation of rubber products and other materials.

Carbon monoxide (CO) is a colorless, odorless, and poisonous gas produced by incomplete burning of carbon in fuels. Carbon monoxide is harmful because it binds to hemoglobin in the blood, reducing the ability of blood to carry oxygen. This interferes with oxygen delivery to the body's organs. The most common effects of CO exposure are fatigue, headaches, confusion, and dizziness due to inadequate oxygen delivery to the brain. For people with cardiovascular disease, short-term CO exposure can further reduce their body's already compromised ability to respond to the increased oxygen demands of exercise, exertion, or stress. Inadequate oxygen delivery to the heart muscle leads to chest pain and decreased exercise tolerance. Unborn babies whose mothers experience high levels of CO exposure during pregnancy are at risk of adverse developmental effects (CARB, 2019c). There are no ecological or environmental effects to ambient CO (CARB, 2019c).

Very high levels of CO are not likely to occur outdoors. However, when CO levels are elevated outdoors, they can be of particular concern for people with some types of heart disease. These people already have a reduced ability for getting oxygenated blood to their hearts in situations where the heart needs more oxygen than usual. They are especially vulnerable to the effects of CO when exercising or under increased stress. In these situations, short-term exposure to elevated CO may result in reduced oxygen to the heart accompanied by chest pain also known as angina (USEPA, 2016). Such acute effects may occur under current ambient conditions for some sensitive individuals, while increases in ambient CO levels increases the risk of such incidences.

Nitrogen oxides (NO_x) is a collective term used to refer to nitrogen monoxide (NO) and nitrogen dioxide (NO_2). NO_2 (often used interchangeably with NO_x) is a reddish-brown, highly reactive gas that is present in all urban atmospheres. The main effect of increased NO_2 is the increased likelihood of respiratory problems. Under ambient conditions, NO_2 can irritate the lungs, cause bronchitis and pneumonia, and lower resistance to respiratory infections. Nitrogen oxides are an important precursor both to ozone (O_3) and acid rain, and may affect both terrestrial and aquatic ecosystems. Longer exposures to elevated concentrations of NO_2 may contribute to the development of asthma and potentially increase susceptibility to respiratory infections. People with asthma, as well as children and the elderly are generally at greater risk for the health effects of NO_2.

The major mechanism for the formation of NO_2 in the atmosphere is the oxidation of the primary air pollutant nitric oxide (NO_x). NO_x plays a major role, together with VOCs, in the atmospheric reactions that produce O_3. NO_x forms when fuel is burned at high temperatures. The two major emission sources are transportation and stationary fuel combustion sources such as electric utility and industrial boilers.

Sulfur dioxide (SO_2) is one of the multiple gaseous oxidized sulfur species and is formed during the combustion of fuels containing sulfur, primarily coal and oil. The largest anthropogenic source of SO_2 emissions in the U.S. is fossil fuel combustion at electric utilities and other industrial facilities. SO_2 is also emitted from certain manufacturing processes and mobile sources, including locomotives, large ships, and construction equipment.

SO_2 affects breathing and may aggravate existing respiratory and cardiovascular disease in high doses. Sensitive populations include asthmatics, individuals with bronchitis or emphysema, children and the elderly. SO_2 is also a primary contributor to acid deposition, or acid rain, which causes

acidification of lakes and streams and can damage trees, crops, historic buildings, and statues. In addition, sulfur compounds in the air contribute to visibility impairment in large parts of the country. This is especially noticeable in national parks. Ambient SO_2 results largely from stationary sources such as coal and oil combustion, steel mills, refineries, pulp and paper mills, and from nonferrous smelters.

Short-term exposure to ambient SO_2 has been associated with various adverse health effects. Multiple human clinical studies, epidemiological studies, and toxicological studies support a causal relationship between short-term exposure to ambient SO_2 and respiratory morbidity. The observed health effects include decreased lung function, respiratory symptoms, and increased emergency department visits and hospitalizations for all respiratory causes. These studies further suggest that people with asthma are potentially susceptible or vulnerable to these health effects. In addition, SO_2 reacts with other air pollutants to form sulfate particles, which are constituents of fine particulate matter ($PM_{2.5}$). Inhalation exposure to $PM_{2.5}$ has been associated with various cardiovascular and respiratory health effects (USEPA, 2017). Increased ambient SO_2 levels would lead to increased risk of such effects.

SO_2 emissions that lead to high concentrations of SO_2 in the air generally also lead to the formation of other sulfur oxides (SO_x). SO_x can react with other compounds in the atmosphere to form small particles. These particles contribute to particulate matter (PM) pollution. Small particles may penetrate deeply into the lungs and in sufficient quantity can contribute to health problems.

Particulate matter (PM) includes dust, dirt, soot, smoke and liquid droplets directly emitted into the air by sources such as factories, power plants, cars, construction activity, fires and natural windblown dust. Particles formed in the atmosphere by condensation or the transformation of emitted gases such as SO_2 and VOCs are also considered particulate matter. PM is generally categorized based on the diameter of the particulate matter: PM_{10} is particulate matter 10 micrometers or less in diameter (known as respirable particulate matte*r*), and $PM_{2.5}$ is particulate matter 2.5 micrometers or less in diameter (known as fine particulate matter).

Based on studies of human populations exposed to high concentrations of particles (sometimes in the presence of SO_2) and laboratory studies of animals and humans, there are major effects of concern for human health. These include effects on breathing and respiratory symptoms, aggravation of existing respiratory and cardiovascular disease, alterations in the body's defense systems against foreign materials, damage to lung tissue, carcinogenesis, and premature death. Small particulate pollution causes health impacts even at very low concentrations.

Respirable particulate matter (PM_{10}) consists of small particles, less than 10 microns in diameter, of dust, smoke, or droplets of liquid which penetrate the human respiratory system and cause irritation by themselves, or in combination with other gases. Particulate matter is caused primarily by dust from grading and excavation activities, from agricultural activities (as created by soil preparation activities, fertilizer and pesticide spraying, weed burning and animal husbandry), and from motor vehicles, particularly diesel-powered vehicles. PM_{10} causes a greater health risk than larger particles, since these fine particles can more easily penetrate the defenses of the human respiratory system.

Fine particulate matter ($PM_{2.5}$) consists of fine particles, which are less than 2.5 microns in size. Similar to PM_{10}, these particles are primarily the result of combustion in motor vehicles, particularly diesel engines, as well as from industrial sources and residential/agricultural activities such as burning. It is also formed through the reaction of other pollutants. As with PM_{10}, these particulates can increase the chance of respiratory disease, and cause lung damage and cancer. In 1997, the USEPA created new Federal air quality standards for $PM_{2.5}$.

The major subgroups of the population that appear to be most sensitive to the effects of particulate matter include individuals with chronic obstructive pulmonary or cardiovascular disease or influenza, asthmatics, the elderly, and children. Particulate matter also impacts soils and damages materials, and is a major cause of visibility impairment.

Numerous studies have linked PM exposure to premature death in people with preexisting heart or lung disease, nonfatal heart attacks, irregular heartbeat, aggravated asthma, decreased lung function, and increased respiratory symptoms. Studies show that every 1 microgram per cubic meter reduction in $PM_{2.5}$ results in a one percent reduction in mortality rate for individuals over 30 years old (Bay Area Air Quality Management District, 2017). Long-term exposures, such as those experienced by people living for many years in areas with high particle levels, have been associated with problems such as reduced lung function and the development of chronic bronchitis – and even premature death. Additionally, depending on its composition, both PM_{10} and $PM_{2.5}$ can also affect water quality and acidity, deplete soil nutrients, damage sensitive forests and crops, affect ecosystem diversity, and contribute to acid rain (USEPA, 2019c).

Lead (Pb) exposure can occur through multiple pathways, including inhalation of air and ingestion of Pb in food, water, soil or dust. Once taken into the body, lead distributes throughout the body in the blood and is accumulated in the bones. Depending on the level of exposure, lead can adversely affect the nervous system, kidney function, immune system, reproductive and developmental systems, and the cardiovascular system. Lead exposure also affects the oxygen carrying capacity of the blood. Excessive lead exposure can cause seizures, mental retardation and/or behavioral disorders. Low doses of lead can lead to central nervous system damage. Recent studies have also shown that lead may be a factor in high blood pressure and subsequent heart disease.

Lead is persistent in the environment and can be added to soils and sediments through deposition from sources of lead air pollution. Other sources of lead to ecosystems include direct discharge of waste streams to water bodies and mining. Elevated lead in the environment can result in decreased growth and reproductive rates in plants and animals, and neurological effects in vertebrates.

Lead exposure is typically associated with industrial sources; major sources of lead in the air are ore and metals processing and piston-engine aircraft operating on leaded aviation fuel. Other sources are waste incinerators, utilities, and lead-acid battery manufacturers. The highest air concentrations of lead are usually found near lead smelters. As a result of the USEPA's regulatory efforts, including the removal of lead from motor vehicle gasoline, levels of lead in the air decreased by 98 percent between 1980 and 2014 (USEPA, 2019d). Based on this reduction of lead in the air over this period,

and since most new developments to not generate an increase in lead exposure, the health impacts of ambient lead levels are not typically monitored by the CARB.

AMBIENT AIR QUALITY STANDARDS

Both the USEPA and the CARB have established ambient air quality standards for common pollutants. These ambient air quality standards represent safe levels of contaminants that avoid specific adverse health effects associated with each pollutant.

The federal and State ambient air quality standards are summarized in Table 3.2-1 for important pollutants. The federal and State ambient standards were developed independently, although both processes attempted to avoid health-related effects. As a result, the federal and State standards differ in some cases. In general, the California standards are more stringent. This is particularly true for ozone, $PM_{2.5}$, and PM_{10}. The USEPA signed a final rule for the federal ozone eight-hour standard of 0.070 ppm on October 1, 2015, and was effective as of December 28, 2015 (equivalent to the California state ambient air quality eight-hour standard for ozone).

TABLE 3.2-1: FEDERAL AND STATE AMBIENT AIR QUALITY STANDARDS

POLLUTANT	*AVERAGING TIME*	*FEDERAL PRIMARY STANDARD*	*STATE STANDARD*
Ozone	1-Hour 8-Hour	-- 0.070 ppm	0.09 ppm 0.070 ppm
Carbon Monoxide	8-Hour 1-Hour	9.0 ppm 35.0 ppm	9.0 ppm 20.0 ppm
Nitrogen Dioxide	Annual 1-Hour	0.053 ppm 0.100 ppm	0.03 ppm 0.18 ppm
Sulfur Dioxide	Annual 24-Hour 1-Hour	0.03 ppm 0.14 ppm 0.075 ppm	-- 0.04 ppm 0.25 ppm
PM_{10}	Annual 24-Hour	-- 150 ug/m^3	20 ug/m^3 50 ug/m^3
$PM_{2.5}$	Annual 24-Hour	12 ug/m^3 35 ug/m^3	12 ug/m^3 --
Lead	30-Day Avg. 3-Month Avg.	-- 0.15 ug/m^3	1.5 ug/m^3 --

NOTES: PPM = PARTS PER MILLION, UG/M3 = MICROGRAMS PER CUBIC METER

SOURCE: CALIFORNIA AIR RESOURCES BOARD, 2020.

In 1997, new national standards for fine particulate matter diameter 2.5 microns or less ($PM_{2.5}$) were adopted for 24-hour and annual averaging periods. The existing PM_{10} standards were retained, but the method and form for determining compliance with the standards were revised.

In addition to the criteria pollutants discussed above, Toxic Air Contaminants (TACs) are another group of pollutants of concern. TACs are injurious in small quantities and are regulated despite the absence of criteria documents. The identification, regulation and monitoring of TACs is relatively recent compared to that for criteria pollutants. Unlike criteria pollutants, TACs are regulated on the basis of risk rather than specification of safe levels of contamination.

Existing air quality concerns within Los Angeles and the entire SCAB are related to increases of regional criteria air pollutants (e.g., ozone and particulate matter), exposure to toxic air

contaminants, odors, and increases in greenhouse gas emissions contributing to climate change. The primary source of ozone (smog) pollution is motor vehicles which account for 70 percent of the ozone in the region. Particulate matter is caused by dust, primarily dust generated from construction and grading activities, and smoke which is emitted from fireplaces, wood-burning stoves, and agricultural burning.

Attainment Status

In accordance with the California Clean Air Act (CCAA), the CARB is required to designate areas of the State as attainment, nonattainment, or unclassified with respect to applicable standards. An "attainment" designation for an area signifies that pollutant concentrations did not violate the applicable standard in that area. A "nonattainment" designation indicates that a pollutant concentration violated the applicable standard at least once, excluding those occasions when a violation was caused by an exceptional event, as defined in the criteria.

Depending on the frequency and severity of pollutants exceeding applicable standards, the nonattainment designation can be further classified as serious nonattainment, severe nonattainment, or extreme nonattainment, with extreme nonattainment being the most severe of the classifications. An "unclassified" designation signifies that the data do not support either an attainment or nonattainment status. The CCAA divides districts into moderate, serious, and severe air pollution categories, with increasingly stringent control requirements mandated for each category.

The USEPA designates areas for ozone, carbon monoxide, and nitrogen dioxide as "does not meet the primary standards," "cannot be classified," or "better than national standards." For sulfur dioxide, areas are designated as "does not meet the primary standards," "does not meet the secondary standards," "cannot be classified," or "better than national standards." However, the CARB terminology of attainment, nonattainment, and unclassified is more frequently used.

Table 3.2-2 shows the state and national attainment status for each criteria pollutant.

TABLE 3.2-2: STATE AND NATIONAL ATTAINMENT STATUS

CRITERIA POLLUTANTS	*STATE DESIGNATIONS*	*NATIONAL DESIGNATIONS*
Ozone (O_3)	Nonattainment	Nonattainment
PM_{10}	Nonattainment	Attainment
$PM_{2.5}$	Nonattainment	Nonattainment
Carbon Monoxide (CO)	Attainment	Unclassified/Attainment
Nitrogen Dioxide (NO_2)	Attainment	Unclassified/Attainment
Sulfur Dioxide (SO_2)	Attainment	Unclassified/Attainment
Sulfates	Attainment	
Lead	Attainment	Nonattainment
Hydrogen Sulfide	Unclassified	
Visibility Reducing Particles	Unclassified	

SOURCE: CALIFORNIA AIR RESOURCES BOARD, 2019A.

The SCAB is designated as a nonattainment area for the federal ozone and $PM_{2.5}$ standards and is also a nonattainment area for the state standards for ozone, PM_{10}, and $PM_{2.5}$. The Project region is also a nonattainment area for the federal lead standard. This is a result of operations at the Ports of

Los Angeles and Long Beach coupled with a few specific industrial processes that occur in the region, such as battery recycling. The proposed Project would not be source of lead.

Los Angeles County Air Quality Monitoring

Ambient air quality at the Project site can be inferred from ambient air quality measurements conducted at nearby air quality monitoring stations. CARB maintains more than 60 monitoring stations throughout California. The Azusa (803 North Loren Avenue, Azusa) air quality monitoring station, located approximately two miles northeast of the Project site, is the closest station to the site. The Azusa monitoring station monitors ambient concentrations of ozone, $PM_{2.5}$, PM_{10}, the three pollutants in nonattainment of air quality standards in the Project region. Ambient emission concentrations will vary due to localized variations in emission sources and climate and should be considered generally representative of ambient concentrations in the development area.

Table 3.2-3 summarizes the published data concerning ozone, $PM_{2.5}$, PM_{10} since 2016 from the Azusa monitoring station for each year that the monitoring data is provided. Ozone, $PM_{2.5}$, PM_{10} are the pollutants mostly affecting the region where the proposed Project is located.

TABLE 3.2-3: AMBIENT AIR QUALITY MONITORING DATA (AZUSA)

POLLUTANT	CAL. PRIMARY STANDARD	FED. PRIMARY STANDARD	YEAR	MAX CONCENTRATION	DAYS EXCEEDED STATE/FED STANDARD
Ozone (O_3) (1-hour)	0.09 ppm for 1 hour	NA	2018 2017 2016	0.139 0.152 0.146	24/3 38/7 30/4
Ozone (O_3) (8-hour)	0.07 ppm for 8 hour	0.070 ppm for 8 hour	2018 2017 2016	0.100 0.114 0.107	43/42 64/62 40/36
Fine Particulate Matter (PM_{10})	50 ug/m3 for 24 hours	150 ug/m^3 for 24 hours	2018 2017 2016	78.3 83.9 74.6	59.2/0 ND/0 ND/0
Fine Particulate Matter ($PM_{2.5}$)	No 24 hour State Standard	35 ug/m^3 for 24 hours	2018 2017 2016	50.7 43.6 104.7	ND/0 ND/0 ND/0

NOTE: ND=THERE WAS INSUFFICIENT (OR NO) DATA AVAILABLE TO DETERMINE THE VALUE.

SOURCE: CALIFORNIA AIR RESOURCES BOARD (AEROMETRIC DATA ANALYSIS AND MANAGEMENT SYSTEM OR IADAM) AIR POLLUTION SUMMARIES.

ODORS

Typically, odors are regarded as an annoyance rather than a health hazard. However, manifestations of a person's reaction to foul odors can range from psychological (e.g., irritation, anger, or anxiety) to physiological (e.g., circulatory and respiratory effects, nausea, vomiting, and headache).

With respect to odors, the human nose is the sole sensing device. The ability to detect odors varies considerably among the population and overall is quite subjective. Some individuals have the ability to smell minute quantities of specific substances; others may not have the same sensitivity but may have sensitivities to odors of other substances. In addition, people may have different reactions to the same odor; in fact, an odor that is offensive to one person (e.g., from a fast-food restaurant) may be perfectly acceptable to another.

It is also important to note that an unfamiliar odor is more easily detected and is more likely to cause complaints than a familiar one. This is because of the phenomenon known as odor fatigue, in which a person can become desensitized to almost any odor and recognition only occurs with an alteration in the intensity.

Quality and intensity are two properties present in any odor. The quality of an odor indicates the nature of the smell experience. For instance, if a person describes an odor as flowery or sweet, then the person is describing the quality of the odor. Intensity refers to the strength of the odor. For example, a person may use the word "strong" to describe the intensity of an odor. Odor intensity depends on the odorant concentration in the air.

When an odorous sample is progressively diluted, the odorant concentration decreases. As this occurs, the odor intensity weakens and eventually becomes so low that the detection or recognition of the odor is quite difficult. At some point during dilution, the concentration of the odorant reaches a detection threshold. An odorant concentration below the detection threshold means that the concentration in the air is not detectable by the average human.

Examples of facilities that are known producers of odors include: wastewater treatment facilities, chemical manufacturing, sanitary landfill, fiberglass manufacturing, transfer station, painting/coating operations (e.g. auto body shops), composting facility, food processing facility of animal origin, petroleum refinery, feed lot/dairy, asphalt batch plant, and rendering plant. These aforementioned uses are either prohibited or subject to a Conditional Use Permit. None of these facilities are permitted by right within the Project site.

SENSITIVE RECEPTORS

A sensitive receptor is a location where human populations, especially children, seniors, and sick persons, are present and where there is a reasonable expectation of continuous human exposure to pollutants. Examples of sensitive receptors include residences, hospitals, and schools. The nearest existing sensitive receptors to the Project site are located approximately 75 feet to the east of the Project site, across Vincent Avenue (i.e. residential receptors). Additionally, there are residential receptors located approximately 380 feet to the west of the Project site. Moreover, residential land uses are planned for the area adjacent to the Project site (to the west).

3.2.2 REGULATORY SETTING

FEDERAL

Federal Clean Air Act

The FCAA was first signed into law in 1970. In 1977, and again in 1990, the law was substantially amended. The FCAA is the foundation for a national air pollution control effort, and it is composed of the following basic elements: NAAQS for criteria air pollutants, hazardous air pollutant standards, state attainment plans, motor vehicle emissions standards, stationary source emissions standards and permits, acid rain control measures, stratospheric ozone protection, and enforcement provisions.

The USEPA is responsible for administering the FCAA. The FCAA requires the USEPA to set NAAQS for several problem air pollutants based on human health and welfare criteria. Two types of NAAQS were established: primary standards, which protect public health (with an adequate margin of safety, including for sensitive populations such as children, the elderly, and individuals suffering from respiratory diseases), and secondary standards, which protect the public welfare from non-health-related adverse effects such as visibility reduction.

NAAQS standards define clean air and represent the maximum amount of pollution that can be present in outdoor air without any harmful effects on people and the environment. Existing violations of the ozone and $PM_{2.5}$ ambient air quality standards indicate that certain individuals exposed to these pollutants may experience certain health effects, including increased incidence of cardiovascular and respiratory ailments.

NAAQS standards have been designed to accurately reflect the latest scientific knowledge and are reviewed every five years by a Clean Air Scientific Advisory Committee (CASAC), consisting of seven members appointed by the USEPA administrator. Members of CASAC are appointed by the USEPA Administrator for their expertise in one or more of the subject areas covered in the ISA. The committee's role is to peer review the NAAQS documents, ensure that they reflect the thinking of the scientific community, and advise the Administrator on the technical and scientific aspects of standard setting. Each document goes through two to three drafts before CASAC deems it to be final. Reviewing NAAQS is a lengthy undertaking and includes the following major phases: Planning, Integrated Science Assessment (ISA), Risk/Exposure Assessment (REA), Policy Assessment (PA), and Rulemaking. The process starts with a comprehensive review of the relevant scientific literature. The literature is summarized and conclusions are presented in the ISA. Based on the ISA, USEPA staff perform a risk and exposure assessment, which is summarized in the REA document. The third document, the PA, integrates the findings and conclusions of the ISA and REA into a policy context, and provides lines of reasoning that could be used to support retention or revision of the existing NAAQS, as well as several alternative standards that could be supported by the review findings. Each of these three documents is released for public comment and public peer review by the CASAC.

Although there is some variability among the health effects of the NAAQS pollutants, each has been linked to multiple adverse health effects including, among others, premature death, hospitalizations and emergency department visits for exacerbated chronic disease, and increased symptoms such as coughing and wheezing. NAAQS standards were last revised for each of the six criteria pollutant as listed below, with detail on what aspects of NAAQS changed during the most recent update:

- *Ozone*: On October 1, 2015, the USEPA lowered the national eight-hour standard from 0.075 ppm to 0.070 ppm, providing for a more stringent standards consistent with the current California state standard.
- *CO*: In 2011, the primary standards were retained from the original 1971 level, without revision. The secondary standards were revoked in 1985.
- *NO_2*: The national NO_2 standard was most recently revised in 2010 following an exhaustive review of new literature pointed to evidence for adverse effects in asthmatics at lower NO_2 concentrations than the existing national standard.

- *SO_2*: On June 2, 2010, a new 1-hour SO_2 standard was established and the existing 24-hour and annual primary standards were revoked. To attain the 1-hour national standard, the 3-year average of the annual 99th percentile of the 1-hour daily maximum concentrations at each site must not exceed 75 ppb.
- *PM*: the national annual average $PM_{2.5}$ standard was most recently revised in 2012 following an exhaustive review of new literature pointed to evidence for increased risk of premature mortality at lower $PM_{2.5}$ concentrations than the existing standard.
- *Lead*: The national standard for lead was revised on October 15, 2008 to a rolling 3-month average. In 2016, the primary and secondary standards were retained.

The law recognizes the importance for each state to locally carry out the requirements of the FCAA, as special consideration of local industries, geography, housing patterns, etc. are needed to have full comprehension of the local pollution control problems. As a result, the USEPA requires each state to develop a State Implementation Plan (SIP) that explains how each state will implement the FCAA within their jurisdiction. A SIP is a collection of rules and regulations that a particular state will implement to control air quality within their jurisdiction. CARB is the state agency that is responsible for preparing the California SIP.

Transportation Control Measures

One particular aspect of the SIP development process is the consideration of potential control measures as a part of making progress towards clean air goals. While most SIP control measures are aimed at reducing emissions from stationary sources, some are typically also created to address mobile or transportation sources. These are known as transportation control measures (TCMs). TCM strategies are designed to reduce vehicle miles traveled and trips, or vehicle idling and associated air pollution. These goals are achieved by developing attractive and convenient alternatives to single-occupant vehicle use. Examples of TCMs include ridesharing programs, transportation infrastructure improvements such as adding bicycle and carpool lanes, and expansion of public transit.

STATE

California Clean Air Act

The California Clean Air Act (CCAA) was first signed into law in 1988. The CCAA provides a comprehensive framework for air quality planning and regulation, and spells out, in statute, the state's air quality goals, planning and regulatory strategies, and performance. CARB is the agency responsible for administering the CCAA. CARB established ambient air quality standards pursuant to the California Health and Safety Code (CH&SC) [§39606(b)], which are similar to the federal standards.

California Air Quality Standards

Air quality standard setting in California commences with a critical review of all relevant peer reviewed scientific literature. The Office of Environmental Health Hazard Assessment (OEHHA) uses the review of health literature to develop a recommendation for the standard. The

recommendation can be for no change, or can recommend a new standard. The review, including the OEHHA recommendation, is summarized in a document called the draft Initial Statement of Reasons (ISOR), which is released for comment by the public, and also for public peer review by the Air Quality Advisory Committee (AQAC). AQAC members are appointed by the President of the University of California for their expertise in the range of subjects covered in the ISOR, including health, exposure, air quality monitoring, atmospheric chemistry and physics, and effects on plants, trees, materials, and ecosystems. The Committee provides written comments on the draft ISOR. The ARB staff next revises the ISOR based on comments from AQAC and the public. The revised ISOR is then released for a 45-day public comment period prior to consideration by the Board at a regularly scheduled Board hearing.

In June of 2002, the CARB adopted revisions to the PM_{10} standard and established a new $PM_{2.5}$ annual standard. The new standards became effective in June 2003. Subsequently, staff reviewed the published scientific literature on ground-level ozone and nitrogen dioxide and the CARB adopted revisions to the standards for these two pollutants. Revised standards for ozone and nitrogen dioxide went into effect on May 17, 2006 and March 20, 2008, respectively. These revisions reflect the most recent changes to the CAAQS.

Tanner Air Toxics Act

California regulates TACs primarily through the Tanner Air Toxics Act (AB 1807) and the Air Toxics Hot Spots Information and Assessment Act of 1987 (AB 2588). The Tanner Act sets forth a formal procedure for CARB to designate substances as TACs. This includes research, public participation, and scientific peer review before CARB can designate a substance as a TAC. To date, CARB has identified more than 21 TACs and has adopted USEPA's list of hazardous air pollutants (HAPs) as TACs. Most recently, diesel PM was added to the CARB list of TACs. Once a TAC is identified, CARB then adopts an Airborne Toxics Control Measure (ATCM) for sources that emit that particular TAC. If there is a safe threshold for a substance at which there is no toxic effect, the control measure must reduce exposure below that threshold. If there is no safe threshold, the measure must incorporate Best Available Control Technologies (BACT) to minimize emissions.

AB 2588 requires that existing facilities that emit toxic substances above a specified level prepare a toxic-emission inventory, prepare a risk assessment if emissions are significant, notify the public of significant risk levels, and prepare and implement risk reduction measures. CARB has adopted diesel exhaust control measures and more stringent emission standards for various on-road mobile sources of emissions, including transit buses and off-road diesel equipment (e.g., tractors, generators). In February 2000, CARB adopted a new public-transit bus-fleet rule and emission standards for new urban buses. These rules and standards provide for (1) more stringent emission standards for some new urban bus engines, beginning with 2002 model year engines; (2) zero-emission bus demonstration and purchase requirements applicable to transit agencies; and (3) reporting requirements under which transit agencies must demonstrate compliance with the urban transit bus fleet rule.

Omnibus Low-NOx Rule

The CARB approved the Omnibus Low-NOx Rule on August 28, 2020, which will require engine NOx emissions to be cut to approximately 75% below current standards beginning in 2024, and 90% below current standards in 2027. The rule also places nine additional regulatory requirements on new heavy-duty truck and engines. Those additional requirements include a 50% reduction in particulate matter emissions, stringent new low-load and idle standards, a new in-use testing protocol, extended deterioration requirements, a new California-only credit program, and extended mandatory warranty requirements. The regulatory requirements in the Omnibus Low-NOX Rule will first become effective in 2024, at the same time as the Advanced Clean Trucks regulations that CARB approved that mandates manufacturers convert increasing percentages of their heavy-duty trucks sold in California to zero-emission vehicles.

LOCAL

South Coast Air Quality Management District

The SCAQMD shares responsibility with the CARB for ensuring that all state and federal ambient air quality standards are achieved and maintained over an area of approximately 10,743 square miles. The SCAQMD reviews Projects to ensure that they do not (1) cause or contribute to any new violation of any air quality standard; (2) increase the frequency or severity of any existing violation of any air quality standard; or (3) delay the timely attainment of any air quality standard or any required interim emission reductions or other milestones of any federal attainment plan.

The SCAQMD is responsible for controlling emissions primarily from stationary sources. The SCAQMD maintains air quality monitoring stations throughout the South Coast Air Basin (SCAB or Basin). In coordination with the SCAG, the SCAQMD is also responsible for developing, updating, and implementing the AQMP for the Basin. An AQMP is a plan prepared and implemented by an air pollution district for a county or region designated as nonattainment of the national and/or California ambient air quality standards.

In 2003, an AQMP was prepared by the SCAQMD to bring the Basin, as well as portions of the Salton Sea Air Basin under the SCAQMD jurisdiction, into compliance with the 1-hour ozone and PM_{10} national standards. The 2003 AQMP also replaced the 1997 attainment demonstration for the federal CO standard and provided a basis for a maintenance plan for CO for the future. It also updated the maintenance plan for the federal NO_2 standard, which the Basin has met since 1992.

A subsequent AQMP for the Basin was adopted by the SCAQMD on June 1, 2007. The goal of the 2007 AQMP was to lead the Basin into compliance with the national 8-hour ozone and PM2.5 standards. The 2007 AQMP outlined a detailed strategy for meeting the national health-based standards for $PM_{2.5}$ by 2015 and 8-hour ozone by 2024 while accounting for and accommodating future expected growth. The 2007 AQMP incorporated significant new emissions inventories, ambient measurements, scientific data, control strategies, and air quality modeling. Most of the reductions were to be from mobile sources, which are currently responsible for about 75 percent of all smog and particulate-forming emissions.

The SCAQMD approved the 2012 AQMP on December 7, 2012. The 2012 AQMP incorporated the latest scientific and technological information and planning assumptions, including the 2012–2035 Regional Transportation Plan/Sustainable Communities Strategy (RTP/SCS) and updated emission inventory methodologies for various source categories. The 2012 AQMP outlines a comprehensive control strategy that meets the requirement for expeditious progress toward attainment with the 24-hour $PM_{2.5}$ federal ambient air quality standard with all feasible control measures and demonstrates attainment of the standard by 2014. The 2012 AQMP also updates the 8-hour ozone control plan with new emission reduction commitments from a set of new control measures that implement the 2007 AQMP's Section 182 (e)(5) commitments. The goal of the Final 2012 AQMP is to lead the Basin into compliance with the national 8-hour ozone and $PM_{2.5}$ standards.

The SCAQMD approved the Final 2016 AQMP on March 3, 2017. The 2016 AQMP includes transportation control measures developed by the SCAG from the 2016–2040 RTP/SCS, as well as the integrated strategies and measures needed to meet the NAAQS. The 2016 AQMP demonstrates attainment of the 1-hour and 8-hour ozone NAAQS as well as the latest 24-hour and annual $PM_{2.5}$ standards.

The SCAQMD is responsible for limiting the amount of emissions that can be generated throughout the basin by various stationary, area, and mobile sources. Specific rules and regulations have been adopted by the SCAQMD Governing Board that (1) limit the emissions that can be generated by various uses and activities; and (2) identify specific pollution reduction measures, which must be implemented in association with various uses and activities. These rules regulate the emissions of not only the federal and state criteria pollutants, but also TACs and acutely hazardous materials. The rules are also subject to ongoing refinement by the SCAQMD.

Among the SCAQMD rules that may be applicable to the proposed Project are Rule 401 (Visible Emissions), Rule 402 (Nuisance), Rule 403 (Fugitive Dust), Rule 1113 (Architectural Coatings), Rule 1138 (Control of Emissions from Restaurant Operations), Rule 1146.2 (Emissions of Oxides of Nitrogen from Large Water Heaters and Small Boilers and Process Heaters), and Rule 1403 (Asbestos Emissions from Demolition/Renovation Activities). Rule 401 restricts the emissions of air contaminants that significantly reduce air opacity. Rule 402 restricts discharges that cause nuisance to the public. Rule 403 requires the use of stringent best available control measures (BACMs) to minimize PM_{10} emissions during grading and construction activities. Rule 1113 requires reductions in the VOC content of coatings. Rule 1138 specifies PM and VOC emissions and odor control requirements for some kinds of commercial cooking operations. Rule 1146.2 restricts the NOx emissions from natural gas-fired water heaters, boilers, and process heaters as defined by this rule. Rule 1401 requires new source review of any new, relocated, or modified permits units that emit TACs. Compliance with SCAQMD Rule 1403 requires the owner or operator of any demolition or renovation activity to have an asbestos survey performed prior to demolition and to provide notification to the SCAQMD prior to commencing demolition activities.

SCAQMD's CEQA guidelines are voluntary initiatives recommended for consideration by local planning agencies. The CEQA *Air Quality Handbook* (Handbook) published by the SCAQMD provides local governments with guidance for analyzing and mitigating project-specific air quality impacts (SCAQMD, 1993). The SCAQMD is currently updating some of the information and methods in the

Handbook, such as the screening tables for determining the air quality significance of a project and the on-road mobile source emission factors. While this process is underway, the SCAQMD recommends using other approved models to calculate emissions from land use projects, such as CalEEMod.

The SCAQMD *Guidance Document for Addressing Air Quality Issues in General Plans and Local Planning* considers impacts on air quality sensitive receptors from TAC-emitting facilities (SCAQMD, 2005). The SCAQMD's siting distance recommendations are the same as those provided by the CARB (e.g., a 500-foot siting distance for air quality sensitive receptors proposed in proximity to freeways and high-traffic roads, and the same siting criteria for distribution centers and dry-cleaning facilities).

Additionally, the SCAQMD has adopted the Air Toxics Control Plan (March 2000, revised March 26, 2004), which is a planning document designed to examine the overall direction of the SCAQMD's air toxics control program. It includes development and implementation of strategic initiatives to monitor and control air toxics emissions. Control strategies that are deemed viable and are within the SCAQMD's jurisdiction will each be brought to the SCAQMD Board for further consideration through the normal public review process. Strategies that are to be implemented by other agencies will be developed in a cooperative effort, and the progress will be reported back to the Board periodically.

The SCAQMD has conducted an in-depth analysis of the TACs and their resulting health risks for all of Southern California. This study, the "Multiple Air Toxics Exposure Study in the South Coast Air Basin, MATES IV," shows that cancer risk has decreased more than 50 percent between MATES III (2008a) and MATES IV (2015). MATES IV is the most comprehensive dataset documenting the ambient air toxic levels and health risks associated with Southern California Air Basin emissions. The SCAQMD is currently in the process of developing MATES V. The MATES IV study represents the baseline health risk for a cumulative analysis. MATES IV estimates the average excess cancer risk level from exposure to TACs is less than 400 in one million basin-wide. These model estimates were based on monitoring data collected at 10 fixed sites within the SCAB. However, the Mates IV study found that Los Angeles County is the county with the greatest cancer risk at 415 in one million, and individual communities could have higher risks than average if they are located near emission sources.

SCAG RTP/SCS

The SCAG is the Metropolitan Planning Organization (MPO) for the region in which the City Irwindale is located. In 2016, the SCAG adopted the 2016 RTP/SCS: A Plan for Mobility, Accessibility, Sustainability and a High Quality of Life, which is an update to the previous 2012 RTP/SCS (SCAG, 2016).

The 2016 RTP/SCS considers the role of transportation in the broader context of economic, environmental, and quality-of-life goals for the future, identifying regional transportation strategies to address mobility needs. The 2016 RTP/SCS describes how the region can attain the GHG emission-reduction targets set by the CARB by achieving an 8 percent reduction in passenger vehicle GHG emissions on a per capita basis by 2020, 18 percent reduction by 2035, and 21 percent reduction by

2040 compared to the 2005 level. Although the focus of the 2016 RTP/SCS is on GHG emission-reduction, compliance with and implementation of 2016 RTP/SCS policies and strategies would also have co-benefits of reducing per capita criteria air pollutant and TAC emissions associated with reduced per capita VMT. Improved air quality with implementation of the 2016 RTP/SCS policies would decrease reactive organic gases (ROG) (i.e., VOCs) by 8 percent, CO by 9 percent, NOx by 9 percent, and $PM_{2.5}$ by 5 percent (SCAG, 2016).

The SCAG's 2016 RTP/SCS builds on the land use policies that were incorporated into the 2012 RTP/SCS, and provides specific strategies for successful implementation. These strategies include development of "complete communities", defined as mixed-use districts that concentrate housing, employment, and a mix of retail and services in close proximity to each other; encouraging employment development around current and planned transit and neighborhood commercial centers; complete streets that meets the needs of all users of the streets, roads and highways including bicyclists, children, persons with disabilities, motorists, electric vehicles, movers of commercial goods, pedestrians, users of public transportation, and seniors; and supporting alternative fueled vehicles. The 2016 RTP/SCS overall land use pattern reinforces the trend of focusing new housing and employment in infill areas well served by transit.

In addition, the 2016 RTP/SCS includes goals and strategies to promote active transportation and improve transportation demand management (TDM). The 2016 RTP/SCS strategies support local planning and Projects that serve short trips, increase access to transit, expand understanding and consideration of public health in the development of local plans and projects, and support improvements in sidewalk quality, local bike networks, and neighborhood mobility areas. The 2016 RTP/SCS proposes to better align active transportation investments with land use and transportation strategies, increase competitiveness of local agencies for federal and state funding, and to expand the potential for all people to use active transportation.

City of Irwindale General Plan

RESOURCE MANAGEMENT ELEMENT

- **Policy 19**. The City of Irwindale will consider environmental justice issues as they are related to potential health impact associated with air pollution and ensure that all land use decisions, including enforcement actions, are made in an equitable fashion to protect residents, regardless of age, culture, ethnicity, gender, race, socioeconomic status, or geographic location from the health effects of air pollution.
- **Policy 21**. The City of Irwindale will encourage the applicant for sensitive land uses (e.g., residences, schools, daycare facilities, playgrounds, and medical facilities) to incorporate design features (e.g., pollution prevention, pollution reduction, barriers, landscaping, ventilation systems, or other measures) in the planning process to minimize the potential pollution impacts on sensitive receptors.
- **Policy 22**. The City of Irwindale will facilitate communications among residents, businesses, and the South Coast Air Quality Management District (SCAQMD) to quickly resolve air pollution nuisance complaints. The City will distribute information to advise residents on how to register a complaint with SCAQMD (SCAQMD's —Cut Smog program).

- **Policy 28**. The City of Irwindale will require conditions for discretionary approvals that require fugitive dust controls and compliance mechanisms for stationary sources (landfill, composting facilities, aggregate facilities, etc.).
- **Policy 29**. The City of Irwindale will encourage vegetation or chemical stabilization for disturbed land as well as construction screening on fencing for phased construction projects.
- **Policy 30**. The City of Irwindale will provide regional and local air quality information on the City's website, including the SCAQMD's 1-800-CUT-SMOG number for the public to report air pollution complaints to the SCAQMD.

3.2.3 IMPACTS AND MITIGATION MEASURES

THRESHOLDS OF SIGNIFICANCE

Consistent with Appendix G of the CEQA Statute and Guidelines, the Project will have a significant impact on the environment associated with air quality if it generates emissions that will:

- Conflict with or obstruct implementation of the applicable air quality plan;
- Result in a cumulatively considerable net increase of any criteria pollutant for which the Project region is in nonattainment under an applicable federal or state ambient air quality standard;
- Expose sensitive receptors to substantial pollutant concentrations;
- Result in other emissions (such as those leading to odors) affecting a substantial number of people; or
- Cause substantial adverse effects on human beings, either directly or indirectly.

METHODOLOGY AND ASSUMPTIONS

A brief discussion of the methodology and assumptions used to estimate the proposed Project's air pollutant emissions is provided below. For further detail on air emissions modeling parameters and assumptions, and other related calculations, see Appendix B.2.

CalEEMod

Emissions modeling has been conducted utilizing CalEEMod™ (v.2016.3.2), developed for the California Air Pollution Officers Association (CAPCOA) in collaboration with California air districts. Based on discussion with the Project applicant, it was assumed that full Project buildout would not occur until 2023.

The land use assumptions for the modeling include: Unrefrigerated Warehouse-No Rail – 545,735; Parking Lot – 11.05 acres; City Park – 2.59 acres. Note that the City Park land use is used as a proxy for the landscaped portions of the Project site.

OPERATIONAL ACTIVITIES

Mobile-source based criteria pollutant emissions were estimated using the emission factors provided within CalEEMod; an estimate of the Project-generated VMT developed as part of this analysis was provided in the V*incent Avenue Industrial Building Traffic Impact Analysis* for proposed

project (Ganddini, 2020), as provided in Appendix D of this EIR. Criteria pollutant emissions from consumer products, landscape maintenance activities, and other sources of operational energy usage (e.g. electricity and natural gas) were estimated using the default emission factors provided in CalEEMod.

Maximum daily emissions were estimated for both peak summer day and peak winter day. The highest value for each criteria pollutant was used for the purposes of this analysis.

CONSTRUCTION ACTIVITIES

Based on information provided by the Project applicant, construction activities were to begin in 2021 and end in 2023. These construction activities include site preparation, grading, building construction, paving, and architectural coatings. Details regarding the construction schedule is provided in Appendix B.2.

MITIGATION

Air quality-related mitigation measures for the proposed Project were developed using CalEEMod, with default emission factors generally as provided by CalEEMod and/or based on recommendations by the SCAQMD. CAPCOA's *Quantifying Greenhouse Gas Mitigation Measures* guidance was utilized as a reference document, as necessary. See Appendix B.2 to this EIR for further detail. The results from CalEEMod for operational and construction emissions are described under the *Impacts and Mitigation Measures* discussion, below.

Mass Daily Emissions Thresholds

The City follows the recommendations of the SCAQMD, which has developed quantitative thresholds for mass daily emissions. In its latest revision, the SCAQMD has established mass daily emissions thresholds of significance as follows:

- Operational-related:
    - 55 pounds per day of oxides of nitrogen (NOx);
    - 55 pounds per day of reactive organic gases (ROG);
    - 150 pounds per day of particulate matter of 10 microns or less in size (PM_{10});
    - 55 pounds per day of particulate matter of 10 microns or less in size ($PM_{2.5}$);
    - 150 pounds per day of SOx;
    - 550 pounds per day of CO.
- Construction-related:
    - 100 pounds per day of oxides of nitrogen (NOx);
    - 75 pounds per day of reactive organic gases (ROG);
    - 150 pounds per day of particulate matter of 10 microns or less in size (PM_{10});
    - 55 pounds per day of particulate matter of 10 microns or less in size ($PM_{2.5}$);
    - 150 pounds per day of SOx;
    - 550 pounds per day of CO.

Localized Significance Thresholds (LSTs)

In addition to regional significance thresholds, the SCAQMD developed localized significance thresholds (LSTs) for emissions of NO_2, CO, PM_{10}, and $PM_{2.5}$ generated at new development sites (offsite mobile source emissions are not included in the LST analysis protocol). LSTs represent the maximum emissions that can be generated at a Project site without expecting to cause or substantially contribute to an exceedance of the most stringent national or State ambient air quality standards. LSTs are based on the ambient concentrations of that pollutant within the Project source receptor area (SRA), as demarcated by the SCAQMD, and the distance to the nearest sensitive receptor. LST analysis for construction is applicable for all Projects that disturb five acres or less on a single day. Irwindale is located within SCAQMD SRA 9 (East San Gabriel Valley). Table 3.2-4 shows the LSTs for a one-acre, two-acre, and five-acre Project site in SRA 9 with sensitive receptors located within 25 meters of the Project site (as previously described, the nearest sensitive receptors are located approximately 75 feet to the east of the project site, which is within 25 meters of the Project site).

TABLE 3.2-4: LOCAL SIGNIFICANCE THRESHOLDS (LSTS)

PROJECT SIZE	*POLLUTANT (POUNDS PER DAY) CONSTRUCTION/OPERATIONS*			
	NO_X	*PM_{10}*	*$PM_{2.5}$*	*CO*
1 acre	89/89	5/2	3/1	623/623
2 acres	128/128	7/2	5/2	953/953
5 acres	203/203	14/4	8/2	1,733/1,733

SOURCES: CALEEMOD (V.2016.3.2). REFER TO ATTACHMENT A FOR MODEL DATA OUTPUTS.
NOTE: VALUES MAY NOT ADD UP DUE TO ROUNDING.

Intersection Hotspot Analysis

Operation of the proposed Project has the potential to generate traffic congestion and increase delay times at intersections within the local study area. The pollutant of primary concern when assessing the proposed Project's impacts at local intersections is carbon monoxide because an elevated concentration of CO tends to accumulate near areas of heavy traffic congestion and where average vehicle speeds are low. Tailpipe emissions are of concern when assessing localized impacts of CO along paved roads.

An adverse concentration of CO, known as a "hotspot", would occur if there was an exceedance of the NAAQS or CAAQS. SCAQMD does not currently have guidance for conducting intersection hot spot analysis. However, the hot spot analyses conducted by SCAQMD for four busy intersections in Los Angeles County is provided. The potential for the proposed Project to cause or contribute to CO hotspots is evaluated by comparing Project intersections' volume data from the Transportation Impact Assessment (Gandini, 2020) with prior studies conducted by SCAQMD in support of their AQMPs and considering existing background CO concentrations.

Toxic Air Contaminant Impacts (Construction and Operations)

Construction and operational activities have the potential to result in health risk impacts (cancer, or other acute or chronic conditions) related to TACs exposure from airborne emissions, specifically the emissions of diesel particulate matter. Health risk from TACs exposure is a cumulative localized

impact based on the exposure of nearby sensitive receptors to specific construction activities as well as on location to the construction and operational activities that emit TACs. To determine the magnitude of health risks associated with TACs exposure, a Health Risk Assessment (HRA) is required.[1] HRAs include dispersion modeling of TACs in order to determine the specific numerical cancer and non-cancer (acute and chronic) risks associated with the TACs on nearby individual receptors (including residences and workers). In order to accurately model the magnitude of TAC exposure on individual receptors, the following information is required:

- Type of TACs emitted during construction and operational activities (e.g. diesel particulate matter, benzene, acrolein, aniline, etc.) (note: there are 187 hazardous air pollutants currently regulated by the USEPA that are considered TACs);
- TACs source location(s) and configuration (note: this is typically provided by the Project applicant for the operational phase via a site plan and detail on the specific Project type, and for the construction phase via construction plans);
- TAC emissions rate(s);
- TAC release height(s); and
- The precise location of nearby residential and workplace receptors.

This information is incorporated into dispersion modeling software (such as AERMOD), which is used in conjunction with facility health risk assessment software (such as the Hotspots Analysis and Reporting Program, otherwise known as HARP-2). The results of such analysis provide a numerical estimate of maximum health risks, which are incorporated into the HRA (with detailed methodology and a list of assumptions provided). An HRA analysis has been developed for the proposed Project (as provided in Appendix B.4); the results of this analysis have been incorporated into the following CEQA analysis.

Odors

The assessment of odor-related impacts is based on the types of odor sources associated with the land uses that would be developed under the Project and their location relative to off-site receptors.

Impacts Related to Project-Generated Pollutants of Human Health Concern

In December 2018, the California Supreme Court issued its decision in *Sierra Club v. County of Fresno* (226 Cal.App.4th 704) (hereafter referred to as the Friant Ranch Decision). The case reviewed the long-term, regional air quality analysis contained in the EIR for the proposed Friant Ranch development. The Friant Ranch Project is a proposed 942-acre master-plan development in unincorporated Fresno County within the San Joaquin Valley Air Basin, an air basin currently in nonattainment for the ozone and $PM_{2.5}$ NAAQS and CAAQS. The Court found that the air quality analysis was inadequate because it failed to provide enough detail "for the public to translate the bare [criteria pollutant emissions] numbers provided into adverse health impacts or to understand why such a translation is not possible at this time." The Court's decision clarifies that the agencies

[1] An HRA is appropriate for the proposed Project since the Project is an industrial facility generating heavy-duty truck trips near to existing sensitive receptors, per CARB's guidance.

authoring environmental documents must make reasonable efforts to connect a Project's air quality impacts to specific health effects or explain why it is not technically feasible to perform such an analysis.

All criteria pollutants that would be generated by the Project are associated with some form of health risk (e.g., asthma). Criteria pollutants can be classified as either regional or localized pollutants. Regional pollutants can be transported over long distances and affect ambient air quality far from the emissions source. Localized pollutants affect ambient air quality near the emissions source. Ozone is considered a regional criteria pollutant, whereas CO, NO_2, SO_2, and lead (Pb) are localized pollutants. PM can be both a local and a regional pollutant, depending on its composition. As discussed above, the primary criteria pollutants of concern generated by the Project are ozone precursors (ROG and NO_x) and PM (including Diesel PM). The SCAQMD does not currently have a methodology that would correlate the expected air quality emissions of Projects to the likely health consequences of the increased emissions. The SCAQMD is in the process of developing a methodology to assess these impacts. In the interim, the following analysis utilizes the Friant Court's advice to explain in meaningful detail why this analysis is not yet feasible.

REGIONAL PROJECT-GENERATED CRITERIA POLLUTANTS (OZONE PRECURSORS AND REGIONAL PM)

Adverse health effects induced by regional criteria pollutant emissions generated by the Project (ozone precursors and PM) are highly dependent on a multitude of interconnected variables (e.g., cumulative concentrations, local meteorology and atmospheric conditions, the number and character of exposed individuals [e.g., age, gender]). For these reasons, ozone precursors (ROG and NO_x) contribute to the formation of ground-borne ozone on a regional scale, where emissions of ROG and NO_x generated in one area may not equate to a specific ozone concentration in that same area. Similarly, some types of particulate pollutants may be transported over long-distances or formed through atmospheric reactions. As such, the magnitude and locations of specific health effects from exposure to increased ozone or regional PM concentrations are the product of emissions generated by numerous sources throughout a region, as opposed to a single individual project.

Models and tools have been developed to correlate regional criteria pollutant emissions to potential community health impacts. Appendix B.1 contains a table that summarizes many of these tools, identifies the analyzed pollutants, describes their intended application and resolution, and analyzes whether they could be used to reasonably correlate project-level emissions to specific health consequences. As provided in Appendix B.1, while there are models capable of quantifying ozone and secondary PM formation and associated health effects, these tools were developed to support regional planning and policy analysis and have limited sensitivity to small changes in criteria pollutant concentrations induced by individual projects. Therefore, translating project generated criteria pollutants to the locations where specific health effects could occur or the resultant number of additional days of nonattainment cannot be estimated with a high degree of accuracy.

Technical limitations of existing models to correlate project-level regional emissions to specific health consequences are recognized by air quality management districts throughout the state, including the San Joaquin Valley Air Pollution Control District (SJVAPCD) and South Coast Air Quality

Management District (SCAQMD), who provided amici curiae briefs for the Friant Ranch legal proceedings. In its brief, SJVAPCD (2015) acknowledges that while health risk assessments for localized air toxics, such as DPM, are commonly prepared, "it is not feasible to conduct a similar analysis for criteria air pollutants because currently available computer modeling tools are not equipped for this task." The air district further notes that emissions solely from the Friant Ranch Project (which equate to less than one-tenth of one percent of the total NO_x and VOC in the Valley) is not likely to yield valid information," and that any such information should not be "accurate when applied at the local level." SCAQMD presents similar information in their brief, stating that "it takes a large amount of additional precursor emissions to cause a modeled increase in ambient ozone levels"[2].

As discussed above, air districts develop region-specific CEQA thresholds of significance in consideration of existing air quality concentrations and attainment or nonattainment designations under the NAAQS and CAAQS. The NAAQS and CAAQS are informed by a wide range of scientific evidence that demonstrates there are known safe concentrations of criteria pollutants. While recognizing that air quality is a cumulative problem, air districts typically consider projects that generate criteria pollutant and ozone precursor emissions below these thresholds to be minor in nature and would not adversely affect air quality such that the NAAQS or CAAQS would be exceeded. Emissions generated by the Project could increase photochemical reactions and the formation of tropospheric ozone and secondary PM, which at certain concentrations, could lead to increased incidence of specific health consequences. Although these health effects are associated with ozone and particulate pollution, the effects are a result of cumulative and regional emissions. As such, a project's incremental contribution cannot be traced to specific health outcomes on a regional scale, and a quantitative correlation of Project-generated regional criteria pollutant emissions to specific human health impacts is not included in this analysis.

LOCALIZED CARBON MONOXIDE CONCENTRATIONS

Heavy traffic congestion can contribute to high levels of CO, and individuals exposed to such hot spots may have a greater likelihood of developing adverse health effects. The SCAQMD recommends that the proposed Project would have a significant localized CO hotspot impact if it causes or contributes to an exceedance of the following attainment standards:

- 1-hour average: 20 ppm (state) and 35 ppm (federal);
- 8-hour average: 9.0 ppm (state/federal)

[2] For example, SCAQMD's analysis of their 2012 Air Quality Attainment Plan showed that modeled NOx and ROG reductions of 432 and 187 tons per day, respectively, only reduced ozone levels by 9 parts per billion. Analysis of SCAQMD's Rule 1315 showed that emissions of NOx and ROG of 6,620 and 89,180 pounds per day, respectively, contributed to 20 premature deaths per year and 89,947 school absence (South Coast Air Quality Management District, 2015).

MODELS AND TOOLS TO CORRELATE PROJECT-GENERATED CRITERIA POLLUTANT EMISSIONS TO HEALTH IMPACTS

Several models and tools capable of translating mass emissions of criteria pollutants to various health endpoints have been developed. The table provided in Appendix B.1 summarizes key tools, identifies the analyzed pollutants, describes their intended application and resolution, and analyzes whether they could be used to reasonably correlate project-level emissions to specific health consequences. As shown in the table provided in Appendix B.1, almost all tools were designed to be used at the national, state, regional, and/or city-levels. Several of the methods have additional problems related to their applicability for translating mass emissions of criteria pollutants to various health endpoints. These tools are not well suited to analyze small or localized changes in pollutant concentrations associated with individual projects. Accordingly, they are generally not recommended for CEQA analyses.

The impact analysis does not directly evaluate airborne lead. Neither construction nor future operations would generate quantifiable lead emissions because of regulations that require unleaded fuel and that prohibit lead in new building materials.

TAC emissions associated with Project construction that could affect surrounding areas are evaluated qualitatively. The potential for the Project operations to expose residents to TAC emissions that would exceed applicable health standards is also discussed qualitatively.

Lastly, the SCAQMD recommends that odor impacts be addressed in a qualitative manner.

IMPACTS AND MITIGATION MEASURES

Impact 3.2-1: The proposed Project has the potential to conflict with or obstruct implementation of the applicable air quality plan. (Significant and Unavoidable)

2016 AIR QUALITY MANAGEMENT PLAN

As part of its enforcement responsibilities, the USEPA requires each state with nonattainment areas to prepare and submit a SIP that demonstrates the means to attain the federal standards. The SIP must integrate federal, state, and local plan components and regulations to identify specific measures to reduce pollution in nonattainment areas, using a combination of performance standards and market-based programs. Similarly, under state law, the CCAA requires an air quality attainment plan to be prepared for areas designated as nonattainment with regard to the NAAQS and CAAQS. Air quality attainment plans outline emissions limits and control measures to achieve and maintain these standards by the earliest practical date.

The Project site is located within the SCAB, which is under the jurisdiction of the SCAQMD. The SCAQMD is required, pursuant to the federal CAA, to reduce emissions of criteria pollutants for which the SCAB is in nonattainment. In order to reduce such emissions, the SCAQMD drafted the 2016 AQMP. The 2016 AQMP establishes a program of rules and regulations directed at reducing air pollutant emissions and achieving state (California) and national air quality standards. The 2016

AQMP is a regional and multi-agency effort including the SCAQMD, CARB, SCAG, and the USEPA. The plan's pollutant control strategies are based on the latest scientific and technical information and planning assumptions, including SCAG's 2016 RTP/SCS, updated emission inventory methodologies for various source categories, and SCAG's latest growth forecasts (SCAG's latest growth forecasts were defined in consultation with local governments and with reference to local general plans.) The Project is subject to the SCAQMD's AQMP.

According to the SCAQMD, in order to determine consistency with SCAQMD's air quality planning two main criteria must be addressed. Criterion 1 includes two components, while Criterion 2 includes three components.

Criterion 1:

a) Would the Project result in an increase in the frequency or severity of existing air quality violations or cause or contribute to new air quality violations?

As shown in Table 3.2-5 (under Impact 3.2-2), the proposed Project would result in emissions exceeding the SCAQMD regional NOx threshold during operations. As previously discussed, the predominate source of NOx emissions would be due to mobile sources, mainly that of heavy-duty trucks. Mobile emissions cannot be regulated by the City. Therefore, the proposed Project would have the potential to cause or affect a violation of the ambient air quality standards.

b) Would the Project delay timely attainment of air quality standards or the interim emissions reductions specified in the AQMP?

The Project would result in NOx emissions beyond the SCAQMD regional significance threshold during operations, and it could potentially delay the timely attainment of air quality standards and/or AQMP emission reduction. **Therefore, the Project would not be consistent with Criterion 1.**

With respect to the second criterion for determining consistency with SCAQMD and SCAG air quality policies, it is important to recognize that air quality planning within the SCAB focuses on attainment of ambient air quality standards at the earliest feasible date. Projections for achieving air quality goals are based on assumptions regarding population, housing, and growth trends. Thus, the SCAQMD's second criterion for determining Project consistency focuses on whether or not the proposed Project exceeds the assumptions utilized in preparing the forecasts presented its air quality planning documents. Determining whether or not a project exceeds the assumptions reflected in the 2016 AQMP involves the evaluation of the three criteria outlined below. The following discussion provides an analysis of each of these criteria.

Criterion 2:

a) Would the Project be consistent with the population, housing, and employment growth Projections utilized in the preparation of the 2016 AQMP?

Growth Projections included in the 2016 AQMP form the basis for the projections of air pollutant emissions and are based on the General Plan land use designations and SCAG's 2016-2040 Regional

Transportation Plan/Sustainability Communities Strategy (2016-2040 RTP/SCS) demographics forecasts. The population, housing, and employment forecasts within the 2016-2040 RTP/SCS are based on local general plans as well as input from local governments, such as the City of Irwindale. The SCAQMD has incorporated these same demographic growth forecasts for various socioeconomic categories (e.g., population, housing, employment) into the 2016 AQMP.

The Project involves the development of 26.05 acres of land that was formerly used as a mining pit (Manning Pit) dating back to the 1930s. The vast majority of the Project site (19.12 acres out of the total 26.05 acres) is designated Industrial/Business Park, consistent with the land use designation and development density presented in the City of Irwindale General Plan. The remaining 6.93-acre portion of the Project site would be changed from "Residential" to "Industrial/Business Park" as part of the proposed Project, consistent with the land use on the balance of the parcel. The Project site is designated by the City of Irwindale General Plan as "Industrial/Business Park", which allows for office, manufacturing, and warehouse uses, including commercial manufacturing, light manufacturing and heavy manufacturing. The proposed Project in and of itself would not induce direct population growth in the City, although it would generate employees. Although the Project includes a General Plan Amendment to convert 6.93 acres of the Project site from "Residential" to "Industrial/Business Park", the Project is anticipated to be within the growth projections anticipated and planned for by the City's General Plan and therefore is unlikely to increase growth beyond the AQMP's projections. However, the increase in employment associated with the conversion of the 6.93 acres of Residential land to Industrial/Business Park land was not specifically planned for by City's General Plan and therefore could be larger than those provided within the AQMP's Projections.[3] **Therefore, the Project would not be consistent with Criterion 2.**

b) Would the Project implement all feasible air quality mitigation measures?

In order to further reduce emissions, the Project would be required to comply with emission reduction measures promulgated by the SCAQMD, such as SCAQMD Rules 402, 403, 1113, and 1403. SCAQMD Rule 402 prohibits the discharge from any source whatsoever such quantities of air contaminants or other material which cause injury, detriment, nuisance, or annoyance to any considerable number of persons or to the public, or which endanger the comfort, repose, health, or safety of any such persons or the public, or which cause, or have a natural tendency to cause, injury or damage to business or property. SCAQMD Rule 403 requires fugitive dust sources to implement Best Available Control Measures for all sources, and all forms of visible particulate matter are prohibited from crossing any property line. SCAQMD Rule 403 is intended to reduce PM_{10} emissions from any transportation, handling, construction, or storage activity that has the potential to generate fugitive dust. SCAQMD 1113 requires manufacturers, distributors, and end-users of architectural and industrial maintenance coatings to reduce ROG emissions from the use of these

[3] Specifically, the Project site is located in Traffic Analysis Zone (TAZ) 22307000. The Regional Travel Demand Model runs for the Project are based on the Southern California Association of Governments (SCAG) 2040 socio-economic assumptions, which show a growth of 740 new jobs in the Project TAZ by year 2040, a portion of which would be attributed to the proposed Project. Depending on how much other development would occur in the Project TAZ by 2040, in addition existing developments and the proposed Project, development of the proposed Project has the potential to exceed the employment projections contained within the AQMP.

coatings, primarily by placing limits on the ROG content of various coating categories. Rule 1403 specifies work practice requirements to limit asbestos emissions from building demolition and renovation activities, including the removal and associated disturbance of asbestos-containing materials. All operators are required to maintain records, including waste shipment records, and are required to use appropriate warning labels, signs, and markings. As such, the proposed Project meets this consistency criterion.

c) *Would the Project be consistent with the land use planning strategies set forth by SCAQMD air quality planning efforts?*

The AQMP contains air pollutant reduction strategies based on SCAG's latest growth forecasts, and SCAG's growth forecasts were defined in consultation with local governments and with reference to local general plans. The proposed Project is consistent with the land use designation and development density presented in the City of Irwindale's General Plan, except for the 6.93-acre portion of the Project site would be changed from "Residential" to "Industrial/Business Park", and therefore could exceed the job growth Projections used by the SCAQMD to develop the AQMP.

CONCLUSION

In conclusion, the determination of AQMP consistency is primarily concerned with the long-term influence of a Project on air quality. Resultant operational emissions would exceed regional significance thresholds potentially hindering the region's ability to meet state and federal air quality standards, thereby conflicting with Criterion 1. Additionally, the Project could be inconsistent with Criterion 2. Thus, the Project is anticipated to conflict with the SCAQMD 2016 AQMP. Implementation of the proposed Project would have a ***significant and unavoidable*** impact relative to this topic. Therefore, the Project would be required to implement the mitigation measures provided under the following impacts discussion.

Impact 3.2-2: Proposed Project operation has the potential to expose sensitive receptors to substantial pollutant concentrations or result in a cumulatively considerable net increase of any criteria pollutant for which the Project region is in nonattainment under an applicable federal or state ambient air quality standard. (Significant and Unavoidable)

The proposed Project would be a direct and indirect source of air pollution, in that it would generate and attract vehicle trips in the region (mobile source emissions) and it would increase area source emissions and energy consumption. The mobile source emissions would be entirely from vehicles, while the area source emissions would be primarily from the use of natural gas fuel combustion, landscape fuel combustion, consumer products, and architectural coatings.

MASS EMISSIONS THRESHOLDS ANALYSIS

The SCAQMD provides a list of applicable construction and operation air quality mass emissions thresholds, as well as a list of mitigation measures to incorporate in circumstances where emissions are above applicable thresholds.

CalEEMod was used to model operational emissions upon full buildout of the Project site. Table 3.2-5 shows proposed Project maximum daily operation emissions as provided by CalEEMod, which include mobile, area source, and energy emissions of criteria pollutants that would result from operations of the proposed Project under the provided assumptions. It should be noted that a discussion of the impact of CO is provided under Impact 3.2-4.

If the proposed Project emissions will exceed the SCAQMD thresholds of significance for operational-generated emissions, the proposed Project will have a significant impact on air quality and all feasible mitigation are required to be implemented to reduce emissions to the extent feasible.

TABLE 3.2-5: OPERATIONAL PROJECT GENERATED EMISSIONS AT FULL BUILDOUT

CATEGORY	ROG	NOX	PM_{10}	$PM_{2.5}$	SO_X	CO
	≤ 55 LBS/DAY	≤ 55 LBS/DAY	≤ 150 LBS/DAY	≤ 55 LBS/DAY	≤ 150 LBS/DAY	≤ 550 LBS/DAY
Area	12.4	<0.1	<0.1	<0.1	0	0.1
Energy	<0.1	2.7	<0.1	0.2	<0.1	2.2
Mobile	3.8	58.6	26.3	7.2	0.4	61.1
Total	**16.5**	**61.3**	**26.3**	**7.4**	**0.4**	**63.3**
SCAQMD Threshold Exceeded?	**N**	**Y**	**N**	**N**	**N**	**N**

SOURCES: CALEEMOD (V.2016.3.2)
NOTE: VALUES MAY NOT ADD UP DUE TO ROUNDING.

As shown in Table 3.2-5, daily emissions of ROG, PM_{10}, $PM_{2.5}$, SOx, and CO resulting from Project buildout would not exceed the SCAQMD thresholds of significance. However, the emissions threshold for NOx would be exceeded, primarily due to the generation of heavy-duty trucks as part of the proposed Project. It should be noted that the air quality modeling utilized the trip rates associated with the land use that would generate the highest number of trips among those allowed at the site (i.e. the "Light Industrial" land use), as provided in Traffic Impact Analysis (see Appendix D). Therefore, the CalEEMod outputs associated with the operation of the Project (such as those shown in Table 3.2-5) represent a conservative estimate of Project emissions associated with the mobile source category, as other allowed land uses are anticipated to generate fewer trips than those modeled.

It should also be noted that the modeling does not take into account the new Omnibus Low-NOx Rule approved by CARB August 28, 2020, which will require engine NOx emissions to be cut to approximately 75% below current standards beginning in 2024, and 90% below current standards in 2027. The rule also places nine additional regulatory requirements on new heavy-duty truck and engines. Those additional requirements include a 50% reduction in particulate matter emissions, stringent new low-load and idle standards, a new in-use testing protocol, extended deterioration requirements, a new California-only credit program, and extended mandatory warranty requirements. Therefore, the NOx emissions modeled for the operation of the Project would be much higher than the actual NOx emissions, beginning in 2024 (after the Omnibus Low-NOx Rule begins taking effect).

Nevertheless, the Project would be required to implement Mitigation Measure 3.2-1, as well as Mitigation Measure 3.4-1.[4] Implementation of CARB and SCAQMD recommendations are incorporated into Mitigation Measure 3.2-1. Mitigation Measure 3.2-1 includes requirements to construct infrastructure to facilitate electric charged for trucks, electric vehicle charging stations, and electrical hookups for trucks with TRUs, and signs identifying anti-idling regulations, enforcement of a buffer zone between truck loading zones/docks and the nearest sensitive receptors, requirements relating to electric or compressed natural gas-powered (propane) forklifts, promotion of "clean" truck fleets, and incorporation of provisions for preferential parking for carpoolers and vanpools.

Measures that were deemed infeasible include but are not limited to: 1) requirements for zero-emissions or near zero-emissions vehicles, as the Project applicant would have limited to no control over the availability of zero-emissions or near zero-emissions vehicles that would be available at the time of Project operation; 2) having trucks that would limit the trucks movement near residential areas, since the Project is located near to an existing residential community; 3) other restrictions on truck activity within and near to the Project site that would have limited to no enforceability.

Quantification of the reduction of emissions associated with these measures included in Mitigation Measure 3.2-1 is difficult if not impossible to quantify with a high degree of accuracy. Therefore, even with the implementation of identified mitigation, Project-related heavy-duty truck travel is assumed to result in operational NOx emissions that would still exceed the SCAQMD daily significance threshold, even after implementation of Mitigation Measure 3.2-1. This results in a cumulatively considerable net increase of NOx (an ozone precursor), for which the Project region is in nonattainment under an applicable federal or state ambient air quality standard.

While California state strategies such as the Governor's Sustainable Freight Action Plan, CARB's AB 32 Scoping Plan, and the Mobile Source Strategy will improve the efficiency and environmental footprint of the urban freight system, including the introduction of zero and near-zero emission vehicles, it is not currently feasible to reduce projected Project emissions to levels below the regional significance thresholds.

The SCAQMD has set its CEQA significance thresholds for NOx at 10 tons per year (expressed as 55 pounds per day) based on the federal CAA, which defines a major stationary source (in extreme ozone nonattainment areas such as the SCAB) as emitting 10 tons per year. The thresholds correlate with the trigger levels for the federal New Source Review (NSR) Program and SCAQMD Rule 1303 for new or modified sources. The NSR Program[5] was created by the federal CAA to ensure that stationary sources of air pollution are constructed or modified in a manner that is consistent with attainment of health-based NAAQS. The NAAQS establish the levels of air quality necessary, with an adequate margin of safety, to protect the public health. Therefore, Projects that do not exceed the

[4] See Section 3.4 of this Draft EIR for further detail on Mitigation Measure 3.4-1.

[5] Code of Federal Regulation (CFR) *[i.e., PSD (40 CFR 52.21, 40 CFR 51.166, 40 CFR 51.165 (b)), Non-attainment NSR (40 CFR 52.24, 40 CFR 51.165, 40 CFR part 51, Appendix S)*

SCAQMD's mass emissions thresholds would not violate any air quality standards or contribute substantially to an existing or Projected air quality violation and no criteria pollutant health impacts.

As previously stated, NOx is a precursor-emissions that forms ozone in the atmosphere in the presence of sunlight where the pollutants undergo complex chemical reactions. It takes time and the influence of meteorological conditions for these reactions to occur, so ozone may be formed at a distance downwind from the sources. Breathing ground-level ozone can result in health effects that include reduced lung function, inflammation of airways, throat irritation, pain, burning, or discomfort in the chest when taking a deep breath, chest tightness, wheezing, or shortness of breath. In addition to these effects, evidence from observational studies strongly indicates that higher daily ozone concentrations are associated with increased asthma attacks, increased hospital admissions, increased daily mortality, and other markers of morbidity. The consistency and coherence of the evidence for effects upon asthmatics suggests that ozone can make asthma symptoms worse and can increase sensitivity to asthma triggers.

Table 3.2-5 shows that a large proportion of the Project's NOx emissions are from mobile sources. Under California law, the local and regional districts are primarily responsible for controlling air pollution from all sources except motor vehicles. CARB is primarily responsible for controlling pollution from motor vehicles. The air districts must adopt rules to achieve and maintain the CAAQS and NAAQS within their jurisdictions.

On December 24, 2018, the California Supreme Court issued an opinion identifying the need to provide sufficient information connecting a Project's air emissions to health impacts or explain why such information could not be ascertained *(Sierra Club v. County of Fresno [Friant Ranch, L.P.]* [2018] 6 Cal.5th 502, Case No. S219783). As noted above and shown in Table 3.2-5, the Project's operational emissions would exceed the SCAQMD's NOx significance thresholds, resulting in an impact. Pursuant to Rule 8.520(f) of the Rules of the California Court, the SCAQMD and the San Joaquin Valley Air Pollution Control District (SJVAPCD) filed amicus curiae briefs in regard to this case. In both briefs, SCAQMD and SJVAPCD provided technical explanations as to why it may not be feasible for a Project to relate the expected adverse air quality impacts to likely health consequences. For the reasons set forth by the SCAQMD and SJVAPCD (Appendix B.1), the proposed Project's significant air quality impacts currently cannot feasibly be related to likely health consequences. The technical challenges are listed in Appendix B.1.

Therefore, for the reasons set forth in Appendix B.1, it is not currently feasible to relate the proposed Project's regional NOx impacts to likely health consequences. The SCAQMD is responsible for assessing air pollutant impacts regionally, and the potential health consequences from those on a regional basis. The current evaluation on the limitations and uncertainties of existing tools is consistent with the SCAQMD findings. The SCAQMD does not currently have any methodology that would correlate the expected air quality emissions of projects to the likely health consequences of the increased emissions. Currently available regional modeling tools are not designed to capture changes in pollutant concentrations for this proposed Project that would be meaningful. This is due in part to a relatively coarse spatial resolution (e.g., greater than 4 x 4 kilometers) which makes it speculative to discern regional Project impacts on air quality. Overall, as provided in greater detail

in Appendix B.1, none of the potential tools that exist are recommended for project-level CEQA analysis.

Operation of the proposed Project would have a ***significant and unavoidable*** impact related to the mass emissions associated with the proposed Project.

LOCALIZED EMISSIONS THRESHOLDS ANALYSIS

According to the SCAQMD localized significance threshold methodology, LSTs would apply to the operational phase of a proposed Project only if the Project includes stationary sources or attracts mobile sources that may spend long periods queuing and idling at the site (e.g., warehouse or transfer facilities). The proposed Project includes one 545,735-sf warehouse. Therefore, in the case of the Proposed Project, the operational phase LST protocol is applied. Operational LSTs apply to CO, NO_2, PM_{10}, and $PM_{2.5}$.

The nearest existing sensitive receptors to the Project site are located approximately 75 feet to the east of the Project site, across Vincent Avenue (i.e. residential receptors). Additionally, there are residential receptors located approximately 380 feet to the west of the Project site. Moreover, residential land uses are planned for the area adjacent to the Project site (to the west). LST thresholds are provided for distances to sensitive receptors of 25, 50, 100, 200, and 500 meters. Therefore, operational LSTs for receptors located at the closest distance (25 meters) were utilized in this analysis.

The appropriate SRA for the LSTs is the East San Gabriel Valley area (SRA 9) since this area includes the Project site. As described, the SCAQMD has produced lookup tables for Projects that disturb one, two and five acres. While the Proposed Project site is ±26.05 acres, the LST threshold value for a five-acre site was employed from the LST lookup tables. This is conservative since the analysis will only account for the dispersion of air pollutants over five acres before reaching sensitive receptors, as opposed to accounting for the dispersion of air pollutants over a greater 26.05-acre area.

For a worst-case scenario assessment, the emissions shown in Table 3.2-6 include all "onsite" Project-related stationary (area) sources and 5 percent of the Project-related mobile sources. Considering that the longest weighted trip length used in CalEEMod for the Project is approximately 20 miles, 5 percent of this total would represent an onsite travel distance for each car and truck of approximately 1 mile.

TABLE 3.2-6: OPERATIONAL-RELATED EMISSIONS ATTRIBUTABLE TO PROJECT BUILDOUT (LST ANALYSIS)

SOURCE	*POLLUTANT (POUNDS PER DAY)*			
	NOX	*PM_{10}*	*$PM_{2.5}$*	*CO*
Onsite Emissions (Summer)	2.9	1.3	0.4	3.1
Onsite Emissions (Winter)	2.9	1.3	0.4	3.0
SCAQMD LST Threshold	**203**	**4**	**2**	**1,733**
SCAQMD Threshold Exceeded?	**No**	**No**	**No**	**No**

SOURCES: CALEEMOD (V.2016.3.2). REFER TO ATTACHMENT A FOR MODEL DATA OUTPUTS.
NOTE: VALUES MAY NOT ADD UP DUE TO ROUNDING.

As seen in Table 3.2-6, the emissions of these pollutants on the peak day of operations would not result in significant concentrations of pollutants at nearby sensitive receptors. Therefore, significant impacts would not occur concerning LSTs during operational activities.

CONCLUSION

As shown in Table 3.2-5 and Table 3.2-6, although implementation of the proposed Project would not generate significant concentrations of pollutants at nearby sensitive receptors, the proposed Project is expected to exceed the SCAQMD mass threshold for operational NOx, as modelled. Mitigation is provided under Mitigation Measure 3.2-1 to reduce emissions to the maximum extent feasible. However, even after implementation of these mitigation measures, out of an abundance of caution, operation of the Project would be considered to have a ***significant and unavoidable*** impact related to the potential to expose sensitive receptors to substantial pollutant concentrations or result in a cumulatively considerable net increase of any criteria pollutant for which the Project region is in nonattainment.

The proposed Project is required to implement the following mitigation measure.

MITIGATION MEASURE(S)

Mitigation Measure 3.2-1: *Prior to the certificate of occupancy issuance, the Project applicant shall demonstrate to the satisfaction of the City of Irwindale Community Development Manager/City Planner and/or their designee that the following measures would be implemented during Project operations. These measures shall be enforced and maintained through Conditions of Approval; Covenants, Codes, and Restrictions (CC&Rs), or other means acceptable to the City of Irwindale Community Development Manager/City Planner and/or their designee.*

- *The proposed warehouse shall be constructed with the appropriate infrastructure to facilitate sufficient electric charging for trucks to plug-in in anticipation of future technology allowing trucks to operate partially on electricity.*
- *At least five percent of all vehicle parking spaces shall include rough-in of electrical conduit for future EV charging stations. Further, provisions for future electrical hookups to plug in any onboard auxiliary equipment shall be provided for Project trucks at each dock door location. Electrical panels shall be appropriately sized to allow for future expanded use.*
- *Legible, durable, weather-proof signs shall be placed at truck access gates, loading docks, and truck parking areas that identify applicable California Air Resources Board (CARB) anti-idling regulations. At a minimum each sign shall include: 1) instructions for truck drivers to shut off engines when not in use; 2) instructions for drivers of diesel trucks to restrict idling to no more than five minutes; and 3) telephone numbers of the building facilities manager and CARB to report violations.*
- *Maintain a buffer zone of at least 150 feet between truck loading zones/docks and the nearest sensitive receptors.*
- *All service equipment (i.e., forklifts) used within the site shall be electric or compressed natural gas-powered (propane).*

- *In order to promote alternative fuels, and help support "clean" truck fleets, the developer/successor-in-interest shall provide building occupants with information related to SCAQMD's Carl Moyer Program, or other such programs that promote truck retrofits or "clean" vehicles and information including, but not limited to, the health effect of diesel particulates, benefits of reduced idling time, CARB regulations, and importance of not parking in residential areas. Tenants shall be notified about the availability of: 1) alternatively fueled cargo handling equipment; 2) grant programs for diesel-fueled vehicle engine retrofit and/or replacement; 3) designated truck parking locations in the Project vicinity; 4) access to alternative fueling stations proximate to the site that supply compressed natural gas; and 5) the United States Environmental Protection Agency's SmartWay program.*
- *There shall be provisions for preferential parking for carpoolers and vanpools.*

Impact 3.2-3: Proposed Project construction has the potential to expose sensitive receptors to substantial pollutant concentrations or result in a cumulatively considerable net increase of any criteria pollutant for which the Project region is in nonattainment under an applicable federal or state ambient air quality standard. (Less than Significant with Mitigation)

Construction-related activities would result in temporary, short-term emissions of DPM from the exhaust of off-road, heavy-duty diesel equipment for site preparation (e.g., clearing, grading); soil hauling truck traffic; paving; application of architectural coatings; and other miscellaneous activities. For construction activity, DPM is the primary TAC of concern. Particulate exhaust emissions from diesel-fueled engines (i.e., DPM) were identified as a TAC by the CARB in 1998. The potential cancer risk from the inhalation of DPM, as discussed below, outweighs the potential for all other health impacts (i.e., non-cancer chronic risk, short-term acute risk) and health impacts from other TACs. Accordingly, DPM is the focus of this discussion.

MASS EMISSIONS THRESHOLDS ANALYSIS

Construction-generated emissions are temporary and short-term but have the potential to represent a significant air quality impact. Three basic sources of short-term emissions will be generated through construction of the proposed Project: operation of the construction vehicles (i.e., excavators, trenchers, dump trucks), the creation of fugitive dust during clearing and grading, and the use of asphalt or other oil-based substances during paving activities. Construction activities such as excavation and grading operations, construction vehicle traffic, and wind blowing over exposed soils would generate exhaust emissions and fugitive PM emissions that affect local air quality at various times during construction. Effects would be variable depending on the weather, soil conditions, the amount of activity taking place, and the nature of dust control efforts. The dry climate of the area during the summer months creates a high potential for dust generation. Construction activities would be subject to SCAQMD Rule 403, which requires taking reasonable precautions to prevent the emissions of fugitive dust, such as using water or chemicals, where possible, for control of dust during the clearing of land and other construction activities.

Construction-generated emissions associated the proposed Project were calculated using the CARB-approved CalEEMod computer program, which is designed to model emissions for land use development Projects, based on typical construction requirements.

Predicted maximum daily mitigated construction-generated emissions for the proposed Project are summarized in Table 3.2-7. Construction-generated emissions are short-term and of temporary duration, lasting only as long as construction activities occur, but would be considered a significant air quality impact if the volume of pollutants generated exceeds the SCAQMD's thresholds of significance.

TABLE 3.2-7: CONSTRUCTION-RELATED PROJECT GENERATED EMISSIONS (POUNDS/DAY) (MITIGATED)

CONSTRUCTION YEAR	ROG	NO_X	PM_{10}	$PM_{2.5}$	SO_X	CO
	≤ 75 LBS/DAY	≤ 100 LBS/DAY	≤ 150 LBS/DAY	≤ 55 LBS/DAY	≤ 150 LBS/DAY	≤ 550 LBS/DAY
2021	4.8	46.5	9.3	5.8	0.1	40.6
2022	35.6	35.9	8.6	3.0	0.1	44.0
2023	35.2	30.3	8.5	2.8	0.1	41.8
Maximum	**35.6**	**46.5**	**9.3**	**5.8**	**0.1**	**44.0**
SCAQMD Threshold Exceeded?	**No**	**No**	**No**	**No**	**No**	**No**

NOTE: VALUES MAY NOT ADD UP DUE TO ROUNDING.
SOURCE: CALEEMOD (V.2016.3.2)

As shown in Table 3.2-7, emissions generated during Project construction would not exceed the SCAQMD's regional thresholds of significance. Therefore, criteria pollutant emissions generated during Project construction would not result in a cumulatively considerable net increase of any criteria pollutant for which the Project region is nonattainment under an applicable federal or state ambient air quality standard.

LOCALIZED EMISSIONS THRESHOLDS ANALYSIS

Diesel emissions generated during the construction of the Project could impact sensitive receptors within the Project area. As previously stated, the nearest existing sensitive receptors to the Project site are the residences approximately 75 feet east of the Project site. In order to identify localized, air toxic-related impacts to sensitive receptors, the SCAQMD recommends addressing LSTs for construction. LSTs were developed in response to SCAQMD Governing Boards' Environmental Justice Enhancement Initiative (I-4). The SCAQMD provided the Final Localized Significance Threshold Methodology (dated June 2003 [revised 2008b]) for guidance. The LST methodology assists lead agencies in analyzing localized impacts associated with proposed Projects.

For this Project, the appropriate SRA for the LSTs is the East San Gabriel Valley SRA 9. LSTs apply to CO, NO_2, PM_{10}, and $PM_{2.5}$. The proposed Project would disturb ±26.05 acres during construction. As previously described, the SCAQMD has produced lookup tables for Projects that disturb less than or equal to five acres daily. The SCAQMD has also issued guidance on applying the CalEEMod emissions software to LSTs for Projects greater than five acres. Since CalEEMod calculates construction emissions based on the number of equipment hours and the maximum daily soil disturbance activity

possible for each piece of equipment, Table 3.2-8 is used to determine the maximum daily disturbed-acreage for comparison to LSTs.

TABLE 3.2-8: EQUIPMENT-SPECIFIC GRADING RATES

CONSTRUCTION PHASE	EQUIPMENT TYPE	ACRES GRADED/ DISTURBED PER 8-HOUR DAY	EQUIPMENT QUANTITY	OPERATION HOURS PER DAY	ACRES GRADED PER DAY
Site Preparation	Rubber Tired Dozers	0.5	3	8	1.5
	Tractors/Loaders/Backhoes	0.5	4	8	2.0
				Site Preparation Total:	3.5
Grading	Excavators	0	2	8	0
	Graders	0.5	1	8	0.5
	Rubber Tired Dozers	0.5	1	8	0.5
	Scrapers	1.0	2	8	2.0
	Tractors/Loaders/Backhoes	0.5	2	8	1.0
				Grading Total:	**4.0**
				Maximum Total Acres Graded per Day:	**4.0**

As shown in Table 3.2-8, Project implementation could potentially disturb up to 3.5 acres daily during the site preparation phase of construction, and 4.0 acres daily during the grading phase of construction. Thus, the LST threshold value for a 3.5-acre construction site was sourced from the LST lookup tables for site preparation and the LST threshold value for a 4.0-acre construction site was sourced from the LST lookup tables for Project grading activities.

The nearest sensitive receptors to the Project site are the residences located to the east of the Project site (approximately 75 feet). LST thresholds are provided for distances to sensitive receptors of 25, 50, 100, 200, and 500 meters. Therefore, LSTs for receptors located at 25 meters were utilized in this analysis. The SCAQMD's methodology clearly states that "off-site mobile emissions from a Project should not be included in the emissions compared to LSTs." Therefore, for purposes of the construction LST analysis, only emissions included in the CalEEMod "onsite" emissions outputs were considered. Table 3.2-9 presents the results of localized emissions during the site preparation and grading phases of construction. The LSTs reflect a maximum disturbance of 3.5 acres daily during site preparation activities and 4.0 acres daily during grading activities, at 25 meters for the proposed Project. It should be noted that the following values reflect incorporation of required SCAQMD requirements, including watering exposed areas three times daily and limiting vehicle speeds on unpaved roads to 15 miles per hour, which are considered as "mitigation" within CalEEMod.

Table 3.2-9 shows that the maximum air pollutant emissions resulting from Project construction would not result in significant concentrations of pollutants at nearby sensitive receptors. Therefore, impacts concerning LSTs during construction activities would be less than significant.

TABLE 3.2-9: CONSTRUCTION-RELATED EMISSIONS ATTRIBUTABLE TO PROJECT BUILDOUT (LST ANALYSIS)

ACTIVITY	*POLLUTANT (POUNDS PER DAY)*			
	NOX	*PM_{10}*	*$PM_{2.5}$*	*CO*
Project Site Preparation	40.5	9.1	5.8	21.2
SCAQMD LST (3.5 acres of disturbance)	**165.5**	**10.5**	**6.5**	**1,343**
Project Site Grading	46.4	4.6	3.1	30.9
SCAQMD LST (4.0 acres of disturbance)	**173**	**11.2**	**6.8**	**1,421**

SOURCE: CALEEMOD (V.2016.3.2).

CONCLUSION

As provided in Tables 3.2-7 and 3.2-9, compliance with federal, State, SCAQMD, and other local regulations and requirements, would ensure the Project would not cause a violation of an air quality standard or contribute substantially to an existing or projected air quality violation, with respect to the construction of the proposed Project. The proposed Project would be required to implement Mitigation Measure 3.2-2, which would ensure that the proposed Project would have a ***less than significant*** impact related to the potential to expose sensitive receptors to substantial pollutant concentrations or result in a cumulatively considerable net increase of any criteria pollutant for which the Project region is in nonattainment.

MITIGATION MEASURE(S)

Mitigation Measure 3.2-2*: Prior to the grading permit issuance, the Project applicant shall demonstrate to the satisfaction of the City of Irwindale Community Development Department Manager/City Planner and/or their designee that the following measures would be implemented during Project construction activities. These measures shall be enforced and maintained by the construction contractor throughout construction activities.*

- *Ensure the cleanest possible construction practices and equipment are used. This includes eliminating the idling of diesel-powered equipment and providing the necessary infrastructure (e.g. electrical hookups) to support zero and near-zero equipment and tools;*
- *Implement, and plan accordingly for, the necessary infrastructure to support zero and near-zero emission technology vehicles and equipment that will be operating on-site. Necessary infrastructure may include the physical (e.g. needed footprint), energy, and fueling infrastructure for construction equipment, on-site vehicles and equipment, and medium-heavy and heavy-duty trucks;*
- *In construction contracts, include language that requires all construction equipment and fleets to be in compliance with all current air quality regulations;*
- *Apply water every 3 hours to disturbed areas within a construction site;*
- *Require minimum soil moisture of 12% for earthmoving by use of a moveable sprinkler system or a water truck. Moisture content can be verified by lab sample or moisture probe.*
- *Limit on-site vehicle speeds (on unpaved roads) to 15 mph;*
- *Replace ground cover in disturbed areas as quickly as possible;*

- *All trucks hauling dirt, sand, soil, or other loose materials are to be tarped with a fabric cover and maintain a freeboard height of 12 inches.*
- *Apply chemical dust suppressant annually to unpaved parking areas.*
- *Cover inactive storage piles;*
- *Sweep streets if visible soil material is carried out from the construction site; and/or*
- *Post a publicly visible sign written in English and Spanish, which specifies the telephone number and person to contact regarding dust complaints. This person shall respond to complaints and take corrective action within 48 hours. The sign shall be in accordance with SCAQMD and/or City requirements, as applicable;*
- *Further, where reasonably feasible, construction equipment should include the use of alternative fuels such as compressed natural gas (CNG), propane, electricity or biodiesel.*

Impact 3.2-4: The proposed Project has the potential to result in other emissions (such as those leading to odors) affecting a substantial number of people. (Less than Significant)

ODORS

While offensive odors rarely cause any physical harm, they can be very unpleasant, leading to considerable distress among the public and often generating citizen complaints to local governments and the SCAQMD. The general nuisance rule (California Health and Safety Code §41700) and Air District Rule 402 is the basis for the threshold.

Examples of facilities that are known producers of odors include: wastewater treatment facilities, chemical manufacturing, sanitary landfill, fiberglass manufacturing, transfer station, painting/coating operations (e.g. auto body shops), composting facility, food processing facility of animal origin, petroleum refinery, feed lot/dairy, asphalt batch plant, and rendering plant. These aforementioned uses are either prohibited or subject to a Conditional Use Permit. None of these facilities are permitted within the Project site.

The Project does not propose sensitive receptors that could be exposed to odors in the vicinity; nor does it propose uses that would create odors that could expose receptors in the area. Air district Rule 402 prohibits any mobile or stationary source generating an objectionable odor, with the exception of odors emanating from certain agricultural operations. The California Health and Safety Code §41700 and Air District Rule 402 prohibit emissions of air contaminants from any source that cause nuisance or annoyance to a considerable number of people or that present a threat to public health or cause property damage. Compliance with these rules would preclude land uses proposed under the proposed Project from emitting objectionable odors.

CARBON MONOXIDE HOTSPOTS

It has long been recognized that CO exceedances are caused by vehicular emissions, primarily when idling at intersections. Concentrations of CO are a direct function of the number of vehicles, length of delay, and traffic flow conditions. Under certain meteorological conditions, CO concentrations close to congested intersections that experience high levels of traffic and elevated background

concentrations may reach unhealthy levels, affecting nearby sensitive receptors. Given the high traffic volume potential, areas of high CO concentrations, or "hot spots," are typically associated with intersections that are projected to operate at unacceptable levels of service during the peak commute hours. However, transport of this criteria pollutant is extremely limited, and CO disperses rapidly with distance from the source under normal meteorological conditions. Furthermore, vehicle emissions standards have become increasingly more stringent in the last 20 years. Currently, the CO standard in California is a maximum of 3.4 grams per mile for passenger cars (requirements for certain vehicles are more stringent). With the turnover of older vehicles, introduction of cleaner fuels, and implementation of control technology on industrial facilities, CO concentrations in the Project vicinity have steadily declined.

Accordingly, with the steadily decreasing CO emissions from vehicles, even very busy intersections do not result in exceedances of the CO standard. The analysis prepared for CO attainment in the SCAQMD's 1992 Federal Attainment Plan for Carbon Monoxide in Los Angeles County can be used to demonstrate the potential for CO exceedances. The SCAQMD CO hot spot analysis was conducted for four busy intersections in Los Angeles County during the peak morning and afternoon time periods. The busiest intersection evaluated had a traffic volume of approximately 100,000 vehicles per day. The Los Angeles County Metropolitan Transportation Authority evaluated the level of service (LOS) in the vicinity of this intersection and found it to be LOS E at peak morning traffic and LOS F at peak afternoon traffic. Even with the inefficient LOS and volume of traffic, the CO analysis concluded that there was no violation of CO standards (SCAQMD 1992).

According to the Traffic Study prepared for the Project (Ganddini, 2020), the Project is anticipated to generate 2,708 daily trips on average. Because the proposed Project would not increase traffic volumes at any intersection to more than 100,000 vehicles per day, there is no likelihood of the Project traffic exceeding CO values. No impact would occur.

NATURALLY OCCURRING ASBESTOS

Another potential air quality issue associated with construction-related activities is the airborne entrainment of asbestos due to the disturbance of naturally-occurring asbestos-containing soils. The proposed Project is not located within an area designated by the State of California as likely to contain naturally-occurring asbestos (Department of Conservation [DOC] 2000). As a result, construction-related activities would not be anticipated to result in increased exposure of sensitive land uses to asbestos. Impacts would be less than significant.

TOXIC AIR CONTAMINANTS

A TAC is defined as an air pollutant that may cause or contribute to an increase in mortality or in serious illness, or that may pose a hazard to human health. TACs are usually present in minute quantities in the ambient air. However, their high toxicity or health risk may pose a threat to public health even at very low concentrations. In general, for those TACs that may cause cancer, there is no concentration that does not present some risk. This contrasts with the criteria pollutants for which acceptable levels of exposure can be determined and for which the State and federal governments have set ambient air quality standards.

Controlling air toxic emissions became a national priority with the passage of the Clean Air Act Amendments (CAAA) of 1990, whereby Congress mandated that the USEPA regulate 188 air toxics, also known as hazardous air pollutants. The USEPA has assessed this expansive list in its latest rule on the Control of Hazardous Air Pollutants from Mobile Sources (Federal Register, Vol. 72, No. 37, page 8430, February 26, 2007) and identified a group of 93 compounds emitted from mobile sources. In addition, USEPA identified seven compounds with significant contributions from mobile sources that are among the national and regional-scale cancer risk drivers from their 1999 National Air Toxics Assessment. These are acrolein, benzene, 1,3-butidiene, diesel particulate matter plus diesel exhaust organic gases (diesel PM), formaldehyde, naphthalene, and polycyclic organic matter.

The 2007 USEPA rule requires controls that will dramatically decrease Mobile Source Air Toxics (MSAT) emissions through cleaner fuels and cleaner engines. According to an FHWA analysis using EPA MOBILE6.2 model, even if vehicle activity (VMT) increases by 145 percent, a combined reduction of 72 percent in the total annual emission rate for the priority MSAT is projected from 1999 to 2050. California maintains stricter standards for clean fuels and emissions compared to the national standards; therefore, it is expected that MSAT trends in California will decrease consistent with or more than the USEPA's national projections.

The CARB published the *Air Quality and Land Use Handbook: A Community Health Perspective* (2005) to provide information to local planners and decision-makers about land use compatibility issues associated with emissions from industrial, commercial and mobile sources of air pollution. The CARB Handbook indicates that mobile sources continue to be the largest overall contributors to State air pollution problems, representing the greatest air pollution health risk to most Californians. The most serious pollutants on a statewide basis include diesel exhaust particulate matter (diesel PM), benzene, and 1,3-butadiene, all of which may be emitted by motor vehicles (especially heavy-duty trucks). These mobile source air toxics are largely associated with freeways and high traffic roads. Non-mobile source air toxics are largely associated with industrial and commercial uses. Table 3.2-10 provides the CARB minimum separation recommendations on siting sensitive land uses.

The Project site is not located adjacent to a rail yard, port, refinery, chrome plater, dry cleaner, or gasoline dispensing facility. The Project site is located approximately 1.4 miles from Interstate 210 (I-210). Air toxics are considered a concern along I-210 because it is a major transportation corridor for large diesel trucks that are known to emit diesel particulates. However, given the distance from the Project site, there are no sensitive land uses proposed within the Project site that would be significantly affected by I-210.

However, there are sensitive residential land uses located to the east and west of the Project site. There is the potential that sensitive land uses could potentially be affected by the operational activities of the proposed Project (including from the increase in diesel trucks traveling to and from the Project site). Therefore, an air toxics health risk analysis (HRA) was conducted utilizing Lakes Environmental Software AERMOD and the ARB's Hotspots Analysis Reporting Program Version 2 (HARP 2) Air Dispersion, Modelling, and Risk Tool (ADMRT). Truck idling, truck on-site mobile, and TRU diesel particulate matter (DPM) emissions were calculated. The residential (30-year exposure) cancer, workplace (30-year exposure) cancer, chronic (non-cancer), and acute (non-cancer) risks

were assessed and compared to SCAQMD thresholds. See Appendix B.4 for full model inputs. Table 3.2-11 summarizes the results of the analysis.

TABLE 3.2-10: CARB MINIMUM SEPARATION RECOMMENDATIONS ON SITING SENSITIVE LAND USES

SOURCE CATEGORY	*ADVISORY RECOMMENDATIONS*
Freeways and High-Traffic Roads	• Avoid siting new sensitive land uses within 500 feet of a freeway, urban roads with 100,000 vehicles/day, or rural roads with 50,000 vehicles/day.[1]
Distribution Centers	• Avoid siting new sensitive land uses within 1,000 feet of a distribution center (that accommodates more than 100 trucks per day, more than 40 trucks with operating transport refrigeration units (TRUs) per day, or where TRU unit operations exceed 300 hours per week). • Take into account the configuration of existing distribution centers and avoid locating residences and other new sensitive land uses near entry and exit points.
Rail Yards	• Avoid siting new sensitive land uses within 1,000 feet of a major service and maintenance rail yard. • Within one mile of a rail yard, consider possible siting limitations and mitigation approaches.
Ports	• Avoid siting of new sensitive land uses immediately downwind of ports in the most heavily impacted zones. Consult local air districts or the CARB on the status of pending analyses of health risks.
Refineries	• Avoid siting new sensitive land uses immediately downwind of petroleum refineries. Consult with local air districts and other local agencies to determine an appropriate separation.
Chrome Platers	• Avoid siting new sensitive land uses within 1,000 feet of a chrome plater.
Dry Cleaners Using Perchloro-ethylene	• Avoid siting new sensitive land uses within 300 feet of any dry cleaning operation. For operations with two or more machines, provide 500 feet. For operations with 3 or more machines, consult with the local air district. • Do not site new sensitive land uses in the same building with perc dry cleaning operations.
Gasoline Dispensing Facilities	• Avoid siting new sensitive land uses within 300 feet of a large gas station (defined as a facility with a throughput of 3.6 million gallons per year or greater). A 50 foot separation is recommended for typical gas dispensing facilities.

SOURCE: AIR QUALITY AND LAND USE HANDBOOK: A COMMUNITY HEALTH PERSPECTIVE (CARB 2005)

TABLE 3.2-11: SUMMARY OF MAXIMUM HEALTH RISKS

RISK METRIC	*MAXIMUM RISK (PER MILLION PERSONS)*	*SIGNIFICANCE THRESHOLD*	*IS THRESHOLD EXCEEDED?*
Residential Cancer Risk (30-year exposure)[1]	3.73	10 per million	No
Workplace Cancer Risk (25-year exposure)[2]	0.26	10 per million	No
Chronic (non-cancer)	<0.01	Hazard Index ≥1	No
Acute (non-cancer)[3]	0	Hazard Index ≥1	No

NOTES: [1]THE MAXIMUM RESIDENTIAL CANCER RISK WOULD BE FOR A RESIDENCE LOCATED APPROXIMATELY 75 FEET TO THE EAST OF THE PROJECT SITE. THE INCREMENTAL RESIDENTIAL CANCER RISK (30-YEAR EXPOSURE) AT THIS LOCATION IS PROVIDED WITHIN THIS TABLE.[2]THE VALUE PROVIDED FOR MAXIMUM WORKPLACE CANCER RISK IS THE MAXIMUM VALUE PROVIDED AT THE NEAREST WORKPLACE LOCATION, LOCATED APPROXIMATELY 5 FEET TO THE NORTH OF THE PROJECT SITE. [3]ACUTE (NON-CANCER) RISKS WERE NOT ESTIMATED, SINCE DPM DOES NOT HAVE SHORT-TERM TOXICITY VALUES.
SOURCES: AERMOD 9.9.0 (V.19191) (LAKES ENVIRONMENTAL SOFTWARE, 2020); AND HARP-2 ADMRT.

As shown in Table 3.2-11, the proposed Project, in and of itself, would not result in a significant increased exposure of receptors to localized concentrations of TACs during project operation. Risk

of residential cancer risk, workplace cancer risk, and chronic and acute non-cancer risks are below the applicable SCAQMD thresholds.

It should be noted that Project construction TACs were not modeled using AERMOD since both maximum and annual mitigated PM_{10} emissions during Project construction would be fewer than those emissions during project operation (as provided in the CalEEMod results provided in Appendix B). Moreover, construction DPM emissions would tend to be located more toward the geographic center of the Project site, compared with vehicles generated by the Project during the Project's operational phase. Since maximum risks from TACs to nearby receptors are demonstrated during Project operation would be less than the maximum risk thresholds provided by SCAQMD, and since emission of construction TACs (i.e. DPM) would be less than during Project operation (both maximum and annual risks), and since construction activities would be temporary and would occur prior to Project operation, risks from construction TACs would also be below the applicable SCAQMD thresholds.

Therefore, implementation of the proposed Project would cause a ***less than significant*** impact relative to this topic.

CONCLUSION

The Project does not propose sensitive receptors that could be exposed to odors in the vicinity; nor does it propose uses that would create odors that could expose receptors in the area. Therefore, operation of the proposed Project would not result in significant objectionable odors. Impacts associated with exposure to odors would be ***less than significant.***

This Project is located in an area that is designated unclassified/attainment for carbon monoxide. Therefore, no Project-level conformity analysis is necessary for CO. Substantial concentrations of carbon monoxide are not expected at or along any streets or intersections affected by the development of the Project site. Impacts associated with carbon monoxide hotspots would be ***less than significant,*** and no additional mitigation is required.

Additionally, implementation of the proposed Project, in and of itself, would not result in an increased exposure of sensitive receptors to localized concentrations of TACs.

Therefore, overall, air quality impacts associated with other emissions would be ***less than significant***.

Impact 3.2-5: The proposed Project has the potential to cause substantial adverse effects on human beings, either directly or indirectly. (Significant and Unavoidable)

The SCAB is designated as a nonattainment area for the federal ozone and $PM_{2.5}$ standards and is also a nonattainment area for the state standards for ozone, PM_{10}, and $PM_{2.5}$. As shown in Table 3.2-5, operation of the Project would generate NOx in excess of the SCAQMD's thresholds for operational emissions. The SCAQMD developed these Project-level thresholds based on the emissions that would exceed a CAAQS or contribute substantially to an existing or projected

violation of a CAAQS. Ambient levels of these criteria pollutants are likely to decrease in the future, based on current and future implementation of federal and/or state regulatory requirements, such as improvements to the statewide vehicle fleet over time (including the long-term replacement of internal combustion engine vehicles with electric vehicles in coming decades).

As shown in the table provided in Appendix B.1 of this EIR, almost all tools available to measure criteria pollutant emissions were designed to be used at the national, state, regional, and/or city-levels. These tools are not well suited to analyze small or localized changes in pollutant concentrations associated with individual projects. Accordingly, they are not recommended by the SCAQMD for CEQA analyses. The following analysis of the potential of the proposed Project to cause substantial adverse effects on human beings is presented qualitatively.

OZONE

Ozone is not emitted directly into the air but is formed through complex chemical reactions between precursor emissions of (VOC) (also known as ROG) and oxides of nitrogen (NO_x) in the presence of sunlight. The reactivity of O_3 causes health problems because it damages lung tissue, reduces lung function and sensitizes the lungs to other irritants. Scientific evidence indicates that ambient levels of O_3 not only affect people with impaired respiratory systems, such as asthmatics, but healthy adults and children as well. Exposure to O_3 for several hours at relatively low concentrations has been found to significantly reduce lung function and induce respiratory inflammation in normal, healthy people during exercise. This decrease in lung function generally is accompanied by symptoms including chest pain, coughing, sneezing and pulmonary congestion.

Studies show associations between short-term ozone exposure and non-accidental mortality, including deaths from respiratory issues. Studies also suggest long-term exposure to ozone may increase the risk of respiratory-related deaths (USEPA, 2019a). The concentration of ozone at which health effects are observed depends on an individual's sensitivity, level of exertion (i.e., breathing rate), and duration of exposure. Studies show large individual differences in the intensity of symptomatic responses, with one study finding no symptoms to the least responsive individual after a 2-hour exposure to 400 parts per billion of ozone and a 50 percent decrement in forced airway volume in the most responsive individual. Although the results vary, evidence suggests that sensitive populations (e.g., asthmatics) may be affected on days when the 8-hour maximum ozone concentration reaches 80 parts per billion (USEPA, 2019b).

Operational Emissions: The Project would generate emissions of ROG and NOx during Project operational activities, as shown in Table 3.2-5. The CAA regulates these pollutants mainly because they contribute to ozone formation, but they can each cause adverse reactions in people on their own, as explained earlier in this chapter. Although the exact effects of Project-level emissions on local health are not precisely known, it is likely that the increases in ROG and NOx generated by the proposed Project would especially affect people with impaired respiratory systems, but also healthy adults and children located in the immediate vicinity of the Project site. However, the increases of these pollutants generated by the proposed Project are not on their own likely to generate an increase in the number of days exceeding the NAAQS or CAAQS standards, based on the size of the proposed Project in comparison to Los Angeles County as a whole. Instead, the increases in ROG and

NOx generated by the proposed Project when combined with the existing ROG and NOx emitted regionally, would affect people, especially those with impaired respiratory systems located in the immediate vicinity of the Project site.

Construction Emissions: As previously stated, precursors of ozone (ROG and NO_x) are accommodated in the emission inventories of State- and federally-required air plans and would not have a significant impact on the attainment and maintenance of ozone AAQS. Therefore, only the SCAQMD construction air emissions threshold for PM_{10} is applicable for the purposes of this impact analysis. Although the exact effects of ROG and NO_x emissions on local health are not known, it is likely that the increases in ROG and NOx generated by the proposed Project would especially affect people with impaired respiratory systems, but also healthy adults and children located in the immediate vicinity of the Project site. However, the increases of these pollutants generated by the proposed Project are not on their own likely to generate an increase in the number of days exceeding the NAAQS or CAAQS standards, based on the size of the proposed Project in comparison to Los Angeles County as a whole. Instead, the increases in ROG and NOx generated by the proposed Project, including during construction activities, when combined with the existing ROG and NOx emitted regionally, would affect people, especially those with impaired respiratory systems located in the immediate vicinity of the Project site. However, it should be noted that, since construction emissions are temporary in nature, the potential for substantial health impacts due to Project construction activities is typically much less than for Project operational activities.

PARTICULATE MATTER

Based on studies of human populations exposed to high concentrations of particles (sometimes in the presence of SO_2) and laboratory studies of animals and humans, PM can cause major effects of concern for human health. These include effects on breathing and respiratory symptoms, aggravation of existing respiratory and cardiovascular disease, alterations in the body's defense systems against foreign materials, damage to lung tissue, carcinogenesis and premature death. Small particulate pollution has health impacts even at very low concentrations – indeed no threshold has been identified below which no damage to health is observed. The major subgroups of the population that appear to be most sensitive to the effects of particulate matter include individuals with chronic obstructive pulmonary or cardiovascular disease or influenza, asthmatics, the elderly and children.

Numerous studies have linked PM exposure to premature death in people with preexisting heart or lung disease, nonfatal heart attacks, irregular heartbeat, aggravated asthma, decreased lung function, and increased respiratory symptoms. Studies show that every 1 microgram per cubic meter reduction in $PM_{2.5}$ results in a one percent reduction in mortality rate for individuals over 30 years old (Bay Area Air Quality Management District, 2017). Long-term exposures, such as those experienced by people living for many years in areas with high particle levels, have been associated with problems such as reduced lung function and the development of chronic bronchitis – and even premature death. Additionally, depending on its composition, both PM_{10} and $PM_{2.5}$ can also affect water quality and acidity, deplete soil nutrients, damage sensitive forests and crops, affect ecosystem diversity, and contribute to acid rain (U.S. Environmental Protection Agency 2019c).

Operational Emissions: The Project would generate emissions of PM during Project operational activities, as shown in Table 3.2-5. Although the exact effects of such emissions on local health are not known, it is likely that the increases in PM generated by the proposed Project would especially affect people with impaired respiratory systems, but also healthy adults and children located in the immediate vicinity of the Project site. However, the increases of these pollutants generated by the proposed Project are not on their own likely to generate an increase in the number of days exceeding the NAAQS or CAAQS standards, based on the size of the Project in comparison the Los Angeles County as a whole. Instead, the increases in PM generated by the proposed Project when combined with the existing PM emitted regionally, would affect people, especially those with impaired respiratory systems located in the immediate vicinity of the Project site. Nevertheless, as demonstrated by the results of the HRA, would not cause an exceedance of the applicable cancer and non-cancer thresholds related to the Project's impacts from TACs (including DPM).

Construction Emissions: The SCAB is designated as a nonattainment area for the federal ozone and $PM_{2.5}$ standards and is also a nonattainment area for the state standards for ozone, PM_{10}, and $PM_{2.5}$, construction of the Project would not generate PM_{10} exhaust in excess of the SCAQMD's numeric threshold for construction emissions. The SCAQMD developed this Project-level threshold based on the emissions that would exceed a CAAQS or contribute substantially to an existing or Projected violation of a CAAQS. Ambient levels of these criteria pollutants are likely to decrease in the future, based on current and future implementation of federal and/or state regulatory requirements, such as improvements to the statewide vehicle fleet over time (including the long-term replacement of internal combustion engine vehicles with electric vehicles in coming decades). Furthermore, based on the short-term nature of construction activities in comparison to operational activities, the potential for substantial health impacts due to particulate matters emissions during Project is limited.

DISCUSSION

As previously discussed, the magnitude and locations of any potential changes in ambient air quality, and thus health consequences, from these additional emissions cannot be quantified with a high level of certainty due to the dynamic and complex nature of pollutant formation and distribution (e.g., meteorology, emissions sources, sunlight exposure), as well as the variabilities in the receptors that reside in a particular area. Additionally, SCAQMD has not established any methodology or thresholds (quantitative or qualitative) for assessing the health effects from criteria pollutants. The City of Irwindale is not aware of any air district in California that has an established methodology for correlating Project-generated criteria pollutant emissions to health end points. From a qualitative perspective, it is well documented from scientific studies that criteria pollutants can have adverse health effects. The federal and state governments have established the NAAQS or CAAQS as an attempt to regionally, and cumulatively, assess and control the health effects that criteria pollutants have within Air Basins. It is anticipated that public health will continue to be affected by the emission of criteria pollutants, especially by those with impaired respiratory systems in the City of Irwindale and the surrounding region so long as the region does not attain the CAAQS or NAAQS. However, the increases of these pollutants generated by the proposed Project are not on their own likely to generate an increase in the number of days exceeding the NAAQS or CAAQS standards, based on

the size of the Project in comparison the Los Angeles County as a whole. Instead, the increases in criteria pollutants generated by the proposed Project when combined with the existing criteria pollutants emitted regionally, would affect people, especially those with impaired respiratory systems located in the immediate vicinity of the Project site. Separately, localized construction activities are temporary in nature, and therefore, do not pose a threat to human health in the same manner as ongoing, chronic, lifetime exposure from Projects during their operational phase.

CONCLUSION

The increases in criteria pollutants generated by the proposed Project when combined with the existing criteria pollutants emitted regionally, would affect people, especially those with impaired respiratory systems located in the immediate vicinity of the Project site. Construction emissions would be temporary in nature, while the operational activities of a Project would be most likely to cause substantial adverse effects on human beings, since ongoing, chronic, and lifetime exposure to criteria pollutants are key in the level of health impact. However, the increases of these pollutants generated by the proposed Project are not on their own likely to generate an increase in the number of days exceeding the health-based NAAQS or CAAQS standards, based on the size of the Project in comparison to Los Angeles County as a whole. Nevertheless, even with implementation of the mitigation measures provided in this section (Mitigation Measures 3.2-1 and 3.2-2), operational NOx emissions would be above the applicable SCAQMD mass emission threshold. Therefore, the proposed Project would have a ***significant and unavoidable*** impact relative to this topic.

See Impact 3.2-4 (previous) for a more detailed discussion of the potential risks from toxic air contaminants and carbon monoxide hotspots by the proposed Project.

MITIGATION MEASURE(S)

Implement ***Mitigation Measures 3.2-1 and 3.2-2.***

This page intentionally left blank.

The purpose of this section is to disclose and analyze the potential impacts associated with the geology of the Project site and regional vicinity, and to analyze issues such as the potential exposure of people and property to geologic hazards, landform alteration, and erosion. This section is based in part on the following: City of Irwindale General Plan Update (City of Irwindale as amended through 2008), Draft Environmental Impact Report (State Clearinghouse No. 2005071047) – City of Irwindale General Plan (City of Irwindale, 2006), Natural Resources Conservation Service (NRCS) Web Soil Survey (NRCS, 2018), and Interactive Fault Map provided by the U.S. Geological Survey (USGS, 2019).

There were no comments received during the NOP comment period related to this environmental topic.

As discussed in the Initial Study prepared for the proposed Project, the proposed Project would connect to the municipal sewer system for wastewater disposal. Septic tanks or septic systems are not proposed as part of the Project. The site has been filled with engineered materials which are known to not contain paleontological resources. Because the fill material has been placed on the site recently and the material is well documented, there is no likelihood of discovering paleontological resources within the site. Additionally, a Hydrology/Best Management Practices (BMPs)/LID Exhibit was prepared for the Project. The Exhibit provides the hydrologic and hydraulic basis of design for the proposed stormwater control features. The Storm Water Pollution Prevention Plan (SWPPP), project-specific Hydrology/BMPs/LID Exhibit, and associated improvements will manage storm water and reduce the potential for erosion or loss of topsoil. There are also no significant deposits of mineral resources located on the Project site, as delineated by the Mineral Resources and Mineral Hazards Mapping Program (MRMHMP). The Project site is not designated as a Mineral Resource Zone (MRZ). As such, CEQA topics of septic systems, paleontological resources, erosion of topsoil, and mineral resources will not be discussed further within this section. The Initial Study is included in Appendix A of this Draft EIR.

3.3.1 ENVIRONMENTAL SETTING

GEOLOGIC SETTING

Regional Geology

The Project site lies in the City of Irwindale, which is located at the junction of the Peninsular Ranges and the Transverse Ranges. Specifically, the Project site is located in the central San Gabriel Valley east of the San Gabriel River. The San Gabriel Valley is bordered by the San Gabriel Mountains on the north, the San Jose Hills to the east, the Puente Hills on the south, and the San Rafael and Repetto Hills on the west. The Valley sediment consists primarily of fans shed southward from the San Gabriel Mountains, and to a lesser degree from other nearby ranges. Coarser materials are contained in broad fans below larger mountain drainage and in channels defined along the major drainages including the San Gabriel and Rio Hondo rivers.

The basement rock of the San Gabriel Mountains includes Cretaceous-aged quartz-diorite that has been intruded and faulted into older metamorphics. Materials shed from these “basement complex” igneous and metamorphic rocks tend to consist primarily of larger, erosion-resistant

gravels and sands with relatively minor amounts of silt and clay. Mountains surrounding the San Gabriel Valley on the west, east and south are underlain by much younger (Miocene- to early Pleistocene-aged) sandstone, siltstone and mudstone sedimentary rock of the Fernando, Puente and Topanga Formations. These rocks tend to contribute finer sediments. Alluvial fan deposits outside of the immediate influence of the major drainage systems consist of sand and gravel with discontinuous lenses of silt and clay.

Local Setting

The Project site is located north of a Los Angeles County owned pit, east of Allen Drive, south of Arrow Highway, and west of Vincent Avenue. The Project site totals approximately 26.05 acres and is comprised of two vacant parcels; one of which is an undeveloped, recently filled, former aggregate mine pit known as the Manning Pit. The elevation of the site ranges from approximately 400 feet to 460 feet above mean sea level. The site has previously been used for mining uses and, as such, has been subject to substantial soil disturbance. The site has since been filled with engineered materials.

The Project site is the general location of the former Irwindale Pit No. 1 (Manning Brothers Pit) Project, which proposed reclamation of the historic mining pit. Mining of the Manning Pit began in the 1930s and was completed in the 1970s. The City of Irwindale acquired the northern portion of the pit (approximately 37 acres) in the late 1980s from the County of Los Angeles, and the County retained the remainder (approximately 45 acres) which is currently used as a supplemental water recharge basin in conjunction with the Irwindale Recharge Basin, located just to the west.

After its acquisition, the City began backfilling the site with a variety of construction debris. However, backfilling was stopped in 1992 when it was discovered that improper filling methods had been used by the contractor. In 2008, the City approved new remediation plans and an Initial Study/Mitigated Negative Declaration (which was subsequently amended in 2009) to excavate the improperly filled site and backfill again according to all local, regional, state and federal standards. At the end of 2017, approximately 4.45 million cubic yards of material has been imported to fill both the site and construct the southern boundary slope.

Soil analysis and management plans have been prepared for the Project site over the last 11 years, including an Excavation Management Plan for the Manning Pit – North Portion of Manning Pit, developed by The Source Group (2009) and a Grading Progress Report, developed by Tetra Tech BAS Geosciences (2015). The Excavation Management Plan was prepared in order to comply with the requirements of both the RWQCB and the SCAQMD.

Although the Project site contains engineered artificial fill as a result of previous remediation activities, seismic hazard zoning for soils is governed by the susceptibility of natural soils underlying the fill sites, according to the Irwindale General Plan. A Custom Soil Survey was completed for the Project site using the NRCS Web Soil Survey program. The NRCS Soils Map is provided in Figure 3.3-1. Table 3.3-1 identifies the type and range of soils found in the Project site.

TABLE 3.3-1: PROJECT SITE SOILS

UNIT SYMBOL	*NAME*	*ACRES IN AOI*	*PERCENT OF AOI*
1106	Urban land-Soboba complex, 0-5% slopes	0.67	2.6
1106	Urban land, commercial-Soboba complex, 0-5% slopes	0.87	3.3
1180	Pits and Quarries	24.51	94.1

SOURCE: NRCS CUSTOM SOIL SURVEY 2018.

Soboba Complex. This series consists of deep, excessively drained soils that formed in alluvium from predominantly granitic rock sources. Sobaba soils are on alluvial fans and flood plains and have slopes of 0 to 30 percent. The mean annual precipitation is about 15 inches and the mean annual air temperature is about 61 degrees F. They have negligible to slow runoff and rapid permeability. The soils are used mostly for pasture. Principal native vegetation are annual grasses and forbs and chaparral shrubs.

Pits and Quarries. This soil consists of areas that have been excavated for rock used in road building or construction. The areas of the unit are mainly on bed rock-controlled glacial upland hills and range mostly from 3 to 50 acres. Slopes are mostly 0 to 4 percent, and escarpments are along the edges of the pits.

FAULTS AND SEISMICITY

Faults

The City of Irwindale, along with the larger South Coast Basin, is located within a seismically active region located at the junction of the Transverse Ranges and the Peninsular Ranges. These two physiographic provinces experience continual seismic activity associated with the lateral movement of the North American and Pacific tectonic plates.

Faults are classified as Historic, Holocene, Late Quaternary, Quaternary, and Pre-Quaternary according to the age of most recent movement. These classifications are described as follows:

- **Historic:** faults on which surface displacement has occurred within the past 200 years;
- **Holocene:** shows evidence of fault displacement within the past 11,000 years, but without historic record;
- **Late Quaternary:** shows evidence of fault displacement within the past 700,000 years, but may be younger due to a lack of overlying deposits that enable more accurate age estimates;
- **Quaternary:** shows evidence of displacement sometime during the past 1.6 million years;
- **Pre-Quaternary:** without recognized displacement during the past 1.6 million years.

Faults are further distinguished as active, potentially active, or inactive:

- **Active:** An active fault is a Historic or Holocene fault that has had surface displacement within the last 11,000 years;
- **Potentially Active:** A potentially active fault is a pre-Holocene Quaternary fault that has evidence of surface displacement between about 1.6 million and 11,000 years ago; and

- **Inactive:** An inactive fault is a pre-Quaternary fault that does not have evidence of surface displacement within the past 1.6 million years. The probability of fault rupture is considered low; however, this classification does not mean that inactive faults cannot, or will not, rupture.

There are numerous active faults located in the regional vicinity of the Project site. The most significant active fault traces in proximity to the Project site are along the San Andreas, Newport-Inglewood, Raymond, and Whittier-Elsinore fault zones, which are considered active. Figure 3.3-2 illustrates the local faults within the vicinity of the Project site. The most notable faults in the regional area are described below.

Duarte Fault: While numerous faults, including active faults, have been mapped in the Southern California region, there is a single fault trace actually known to be present within the City's boundaries. A buried segment of the active Duarte fault is known to traverse the southwestern corner of the Azusa Largo pit continuing along Foothill Boulevard to the east. The Duarte fault is considered a component of the larger Sierra Madre fault zone that is located along the southern foothills of the San Gabriel Mountains possessing a maximum credible magnitude of about 7.2 on the Richter scale.

East Montebello Fault: A 4.9 magnitude earthquake recently occurred along this fault in 1989, approximately 9 miles west of the city. This earthquake was followed 25 minutes later by a magnitude 4.4 aftershock with a very similar location. Some regard this earthquake as an aftershock of the Pasadena earthquake, six months earlier.

Chino Fault: The Chino fault is a right-reverse fault located approximately 12 miles southeast of the City, possessing a maximum credible magnitude of about 6.0-7.0 on the Richter scale with an unknown year span.

Cucamonga Fault: The Cucamonga fault zone is part of the same fault system, marking the southern boundary of the San Gabriel Mountains, as the Sierra Madre fault zone. Sometimes it is included as part of the Sierra Madre fault zone, as is the San Fernando fault zone far to the west. The Cucamonga fault is a thrust fault located approximately 12 miles east of the City, possessing a maximum credible magnitude of about 6.0-7.0 on the Richter scale with an estimated 600-700 years.

Sierra Madre Fault-San Gabriel Fault Zone: The Sierra Madre fault is a reverse fault located approximately two miles north of the City, possessing a maximum credible magnitude of about 7.2 on the Richter scale.

San Andreas Fault: The San Andreas fault is considered most likely to produce a large seismic event within the next 100 years. The San Andreas fault lies approximately 23 miles northwest of the Project site. Geologic evidence suggests that a major earthquake (7.5 to 8.5 Richter magnitude) has a 50 percent chance of occurring within the next 30 years. An earthquake of this magnitude is comparable to the 1906 San Francisco earthquake and has the potential for causing considerable damage in the Southern California region.

Newport-Inglewood Fault: An earthquake occurring along the Newport-Inglewood fault could impact the Project site and the City of Irwindale. The Newport-Inglewood fault is located approximately 29 miles southwest of the Project site, and it is estimated that 6.0 to 6.5 Richter magnitude earthquakes on this fault have a 15 to 50 percent probability of occurrence within the next 100 years. A 6.5 magnitude earthquake could produce strong ground shaking lasting from 12 to 18 seconds. The Long Beach earthquake of 1933 registered 6.3 on the Richter scale.

Raymond Hill Fault: The Raymond Hill fault extends through the cities of South Pasadena, Pasadena, Arcadia, and San Marino. This fault has been postulated to be an extension of the Sierra Madre fault system. There is evidence of surface rupture exhibited by scarp features in addition to fault creep. The Raymond Hill fault lies approximately six miles west of the Project site. This left lateral reverse (strike slip) fault has a potential for a maximum credible magnitude of 6.7.

Clamshell-Sawpit Fault: The Clamshell-Sawpit fault extends through the cities of Sierra Madre and Monrovia. This fault is a reverse thrust fault with a mapped length of 15 miles. This fault was the most likely source of the 1991 Sierra Madre earthquake though the fault's depth probably prevented surface rupture.

Whittier-Elsinore Fault: The Whittier-Elsinore Fault lies in close proximity to the Project site (approximately nine miles to the south), but historically this fault has produced relatively minor earthquakes (less than 4.5 Richter magnitude). Geologic studies indicate that this fault has less than a 15 percent probability of producing a moderate earthquake (5.5 to 6.0 Richter magnitude) within the next 100 years.

In addition to the above faults, a substantial number of previously unknown blind-thrust faults are now suspected to traverse the Los Angeles region. These faults are very deep and generally do not exhibit surface displacement common with the other types of faults.

Seismicity

The amount of energy available to a fault is determined by considering the slip-rate of the fault, its area (fault length multiplied by down-dip width), maximum magnitude, and the rigidity of the displaced rocks. These factors are combined to calculate the moment (energy) release on a fault. Earthquakes are generally expressed in terms of intensity and magnitude. Intensity is based on the observed effects of ground shaking on people, buildings, and natural features. By comparison, magnitude is based on the amplitude of the earthquake waves recorded on instruments, which have a common calibration. The Richter scale, a logarithmic scale ranging from 0.1 to 9.0, with 9.0 being the strongest, measures the magnitude of an earthquake relative to ground shaking. Table 3.3-2 provides a description and a comparison of intensity and magnitude.

TABLE 3.3-2: MODIFIED MERCALLI INTENSITY SCALE FOR EARTHQUAKES

RICHTER MAGNITUDE	*MODIFIED MERCALLI*	*EFFECTS OF INTENSITY*
0.1 – 0.9	I	Earthquake shaking not felt
1.0 – 2.9	II	Shaking felt by those at rest.
3.0 – 3.9	III	Felt by most people indoors, some can estimate duration of shaking.
4.0 – 4.5	IV	Felt by most people indoors. Hanging objects rattle, wooden walls and frames creak.
4.6 – 4.9	V	Felt by everyone indoors, many can estimate duration of shaking. Standing autos rock. Crockery clashes, dishes rattle and glasses clink. Doors open, close and swing.
5.0 – 5.5	VI	Felt by all who estimate duration of shaking. Sleepers awaken, liquids spill, objects are displaced, and weak materials crack.
5.6 – 6.4	VII	People frightened and walls unsteady. Pictures and books thrown, dishes and glass are broken. Weak chimneys break. Plaster, loose bricks and parapets fall.
6.5 – 6.9	VIII	Difficult to stand. Waves on ponds, cohesionless soils slump. Stucco and masonry walls fall. Chimneys, stacks, towers, and elevated tanks twist and fall.
7.0 – 7.4	IX	General fright as people are thrown down, hard to drive. Trees broken, damage to foundations and frames. Reservoirs damaged, underground pipes broken.
7.5 – 7.9	X	General panic. Ground cracks, masonry and frame buildings destroyed. Bridges destroyed, railroads bent slightly. Dams, dikes and embankments damaged.
8.0 – 8.4	XI	Large landslides, water thrown, general destruction of buildings. Pipelines destroyed, railroads bent.
8.5 +	XII	Total nearby damage, rock masses displaced. Lines of sight/level distorted. Objects thrown into air.

SOURCE: UNITED STATES GEOLOGICAL SURVEY

According to the California Geological Survey's (CGS) Probabilistic Seismic Hazard Assessment Program, Los Angeles County is considered to be within an area that is predicted to have a 10 percent probability that a seismic event would produce horizontal ground shaking of 60 to 70 percent within a 50-year period. This level of ground shaking correlates to a Modified Mercalli intensity of V to IX, light to strong.

SEISMIC HAZARDS

Seismic Ground Shaking

As stated, the Project site is located within a seismically active region of southern California with several faults identified as having the potential for significant seismic activity. As a result of the foreseeable seismicity in California, the State requires special design considerations for all structural improvements in accordance with the seismic design provisions in the California Building Code. These seismic design provisions require enhanced structural integrity based on several risk parameters.

Fault Rupture

A fault rupture occurs when the surface of the earth breaks as a result of an earthquake, although this does not happen with all earthquakes. These ruptures generally occur in a weak area of an existing fault. Ruptures can be sudden (i.e. earthquake) or slow (i.e. fault creep).

The California legislature passed the Alquist-Priolo Special Studies Zone Act in 1972 to address seismic hazards associated with faults and to establish criteria for development in areas with identified seismic hazard zones. The Alquist-Priolo Fault Zoning Act requires active earthquake fault zones to be mapped and it provides special development considerations within these zones. The Project site is not located within an Alquist-Priolo special study zone and no known active faults are shown on current geologic maps for the site.

Liquefaction

Liquefaction normally occurs when sites underlain by saturated, loose to medium dense, granular soils are subjected to relatively high ground shaking. During an earthquake, ground shaking may cause certain types of soil deposits to lose shear strength, resulting in ground settlement, oscillation, loss of bearing capacity, landsliding, and the buoyant rise of buried structures. The majority of liquefaction hazards are associated with sandy soils, silty soils of low plasticity, and some gravelly soils. Cohesive soils are generally not considered to be susceptible to liquefaction. In general, liquefaction hazards are most severe within the upper 50 feet of the surface, except where slope faces or deep foundations are present. As shown in the Earthquake Zones of Required Investigation Map of the Baldwin Park Quadrangle, the Project site is located in an area where previous occurrence of landslide movement, or local topographic, geological, geotechnical and subsurface water conditions indicate a potential for permanent ground displacements. In addition, soil data from the NRCS Web Soil Survey (NRCS 2018) suggests that the potential for liquefaction of the underlaying soils of the Project site is moderate given that the soils are high in sand and the water table is moderately high. However, based on the Soil analysis and management plans that have been prepared for the Project site, including an Excavation Management Plan for the Manning Pit – North Portion of Manning Pit, developed by The Source Group (2009) and a Grading Progress Report, developed by Tetra Tech BAS Geosciences (2015), as a result of the extensive remediation and engineering efforts, geologic site reviews, and site grading and compaction efforts, the potential for liquefaction of the site is considered low.

Lateral Spreading

Lateral spreading typically results when ground shaking moves soil toward an area where the soil integrity is weak or unsupported, and it typically occurs on the surface of a slope, although it does not occur strictly on steep slopes. Oftentimes, lateral spreading is directly associated with areas of liquefaction. As shown in the Earthquake Zones of Required Investigation Map of the Baldwin Park Quadrangle, the Project site is located in an area where previous occurrence of landslide movement, or local topographic, geological, geotechnical and subsurface water conditions indicate a potential for permanent ground displacements. However, the current on-site soils are engineered fill and import fill. Based on the Soil analysis and management plans that have been prepared for the Project site, including an Excavation Management Plan for the Manning Pit – North Portion of Manning Pit, developed by The Source Group (2009) and a Grading Progress Report, developed by Tetra Tech BAS Geosciences (2015), as a result of the extensive remediation and engineering efforts, geologic site reviews, and site grading and compaction efforts, the potential for liquefaction of the site is considered low. Similarly, the potential for lateral spreading is also low.

Landslides

Landslides include rockfalls, deep slope failure, and shallow slope failure. Factors such as the geological conditions, drainage, slope, vegetation, and others directly affect the potential for landslides. One of the most common causes of landslides is construction activity that is associated with road building (i.e. cut and fill). As shown in the Earthquake Zones of Required Investigation Map of the Baldwin Park Quadrangle, the Project site is located in an area where previous occurrence of landslide movement, or local topographic, geological, geotechnical and subsurface water conditions indicate a potential for permanent ground displacements. However, since remediation and engineering efforts, geologic site reviews, and site grading and compaction efforts, the Project site is currently relatively flat and there are no slopes or topographical features within the area subject to landslides. The potential for landslides on the Project site is considered low, based on the soil analysis and management plans that have been prepared for the Project site, including an Excavation Management Plan for the Manning Pit – North Portion of Manning Pit, developed by The Source Group (2009) and a Grading Progress Report, developed by Tetra Tech BAS Geosciences (2015).

NON-SEISMIC HAZARDS

Expansive Soils

Expansive soils can undergo significant volume change with changes in moisture content. They shrink and harden when dried and expand and soften when wet. If structures are underlain by expansive soils, it is important that foundation systems be capable of tolerating or resisting any potentially damaging soil movements. In addition, it is important to limit moisture changes in the surficial soils by using positive drainage away from buildings as well as limiting landscaping watering.

Although engineered artificial fills occur within the Project Site, seismic hazard zoning for expansive soils is governed by the liquefaction susceptibility of natural soils underlying the fill sites. Soil data from the NRCS Web Soil Survey (NRCS 2018) suggests that the potential for expansive soils at the Project site is moderate given that the soils are high in sand and the water table is moderately high. However, based on the soil analysis and management plans that have been prepared for the Project site, including an Excavation Management Plan for the Manning Pit – North Portion of Manning Pit, developed by The Source Group (2009) and a Grading Progress Report, developed by Tetra Tech BAS Geosciences (2015), as a result of the extensive remediation and engineering efforts, geologic site reviews, and site grading and compaction efforts, the potential for expansive soils of the site is considered low.

Collapsible Soils

Collapsible soils undergo a rearrangement of their grains and a loss of cementation, resulting in substantial and rapid settlement under relatively low loads. Collapsible soils occur predominantly at the base of mountain ranges, where Holocene-age alluvial fan and wash sediments have been deposited during rapid run-off events. Soils prone to collapse are commonly associated with manmade fill, wind-laid sands and silts, and alluvial fan and mudflow sediments deposited during flash floods. During an earthquake, even slight settlement of fill materials can lead to a differentially settled structure and significant repair costs. Differential settlement of structures typically occurs

when heavily irrigated landscape areas are near a building foundation. Examples of common problems associated with collapsible soils include tilting floors, cracking or separation in structures, sagging floors, and nonfunctional windows and doors. In areas subject to potential liquefaction, the potential for liquefaction induced settlement, such as collapsible soils, is present. Because the potential for liquefaction of the site is considered low due to remediation, grading and compaction efforts of the soil, the potential for collapsible soils within the Project site is considered low.

Subsidence

Land subsidence is the gradual settling or sinking of an area with little or no horizontal motion due to changes taking place underground. It is a natural process, although it can also occur (and is greatly accelerated) as a result of human activities. Common causes of land subsidence from human activity include: pumping water, oil, and gas from underground reservoirs; dissolution of limestone aquifers (sinkholes); collapse of underground mines; drainage of organic soils; and initial wetting of dry soils. Subsidence has not been identified in the Irwindale General Plan as an issue in the Irwindale area.

3.3.2 REGULATORY SETTING

FEDERAL

Uniform Building Code (UBC)

The purpose of the Uniform Building Code (UBC) is to provide minimum standards to preserve the public peace, health, and safety by regulating the design, construction, quality of materials, certain equipment, location, grading, use, occupancy, and maintenance of all buildings and structures. UBC standards address foundation design, shear wall strength, and other structurally related conditions.

STATE

The State of California has established a variety of regulations and requirements related to seismic safety and structural integrity, including the California Building Code, the Alquist-Priolo Earthquake Fault Zoning Act and the Seismic Hazards Mapping Act.

California Building Standards Code

Title 24 of the California Code of Regulations, known as the California Building Standards Code (CBSC) or just "Title 24," contains the regulations that govern the construction of buildings in California. The CBSC includes the following parts: California Administrative Code, California Building Code, California Residential Code, California Electrical Code, California Mechanical Code, California Plumbing Code, California Energy Code, California Historical Building Code, California Fire Code, California Existing Building Code, and California Green Building Standards Code (CALGreen), California Referenced Standards Code. Through the CBSC, the state provides a minimum standard for building design and construction. The CBSC contains specific requirements for seismic safety, excavation, foundations, retaining walls and site demolition. It also regulates grading activities, including drainage and erosion control.

CALIFORNIA BUILDING CODE

The California Building Code, Title 24, Part 2, Chapter 16 addresses structural design, Chapter 17 addresses structural tests and special inspections, and Chapter 18 addresses soils and foundations. Section 1610 provides structural design standards for foundation walls and retaining walls to ensure resistance to lateral soil loads. Section 1613 provides structural design standards for earthquake loads. Section 1704.7 requires special inspections for existing site soil conditions, fill placement and load-bearing requirements during the construction as specified in Table 1704.7 of this section. Sections 1704.8 through 1704.16 provide inspection and testing requirements for various foundation types, and construction material types. Section 1803.1.1.1 requires each city and county enact an ordinance which requires a preliminary soil report and that the report be based upon adequate test borings or excavations, of every subdivision, where a tentative and final map is required pursuant to Section 66426 of the Government Code. Section 1803.5.3 defines expansive soils and specifies that in areas likely to have expansive soil, the building official shall require soil tests to determine where such soils do exist. Section 1803.5.4 specifies that a subsurface soil investigation must be performed to determine whether the existing ground-water table is above or within 5 feet (1524 mm) below the elevation of the lowest floor level where such floor is located below the finished ground level adjacent to the foundation. Section 1803.5.8 provides specific standards where shallow foundations will bear on compacted fill material more than 12 inches (305 mm) in depth. Section 1803.5.11 and 1803.5.12 provide requirements for geotechnical investigations for structures assigned varying Seismic Design Categories in accordance with Section 1613. Section 1804 provides standards and requirements for excavation, grading, and fill. Section 1808, 1809, and 1810 provides standards and requirements for the construction of varying foundations.

California Health and Safety Code

Section 19100 et seq. of the California Health and Safety Code establishes the State's regulations for earthquake protection. This section of the code requires structural designs to be capable of resisting likely stresses produced by phenomena such as strong winds and earthquakes.

Alquist-Priolo Earthquake Fault Zoning Act

The Alquist-Priolo Earthquake Fault Zoning Act of 1972 sets forth the policies and Criteria of the State Mining and Geology Board, which governs the exercise of governments' responsibilities to prohibit the location of developments and structures for human occupancy across the trace of active faults. The policies and criteria are limited to potential hazards resulting from surface faulting or fault creep within Earthquake Fault Zones, as delineated on maps officially issued by the State Geologist. Working definitions include:

- Fault – a fracture or zone of closely associated fractures along which rocks on one side have been displaced with respect to those on the other side;
- Fault Zone – a zone of related faults, which commonly are braided and sub parallel, but may be branching and divergent. A fault zone has a significant width (with respect to the scale at

which the fault is being considered, portrayed, or investigated), ranging from a few feet to several miles;

- Sufficiently Active Fault – a fault that has evidence of Holocene surface displacement along one or more of its segments or branches (last 11,000 years); and
- Well-Defined Fault – a fault whose trace is clearly detectable by a trained geologist as a physical feature at or just below the ground surface. The geologist should be able to locate the fault in the field with sufficient precision and confidence to indicate that the required site-specific investigations would meet with some success.

"Sufficiently Active" and "Well Defined" are the two criteria used by the State to determine if a fault should be zoned under the Alquist-Priolo Act. If CGS determines a fault to be active, then it is typically incorporated into a Special Studies Zone in accordance with the Alquist-Priolo Earthquake Hazard Act. Alquist-Priolo Special Study Zones are usually one-quarter mile or less in width and require site-specific evaluation of fault location and require a structure setback if the fault is found traversing a Project site.

Seismic Hazards Mapping Act

The Seismic Hazards Mapping Act, passed in 1990, addresses non-surface fault rupture earthquake hazards, including liquefaction and seismically-induced landslides. Under the Act, seismic hazard zones are to be mapped by the State Geologist to assist local governments in land use planning. The program and actions mandated by the Seismic Hazards Mapping Act closely resemble those of the Alquist-Priolo Earthquake Fault Zoning Act (which addresses only surface fault-rupture hazards) and are outlined below:

The State Geologist is required to delineate the various "seismic hazard zones."

- Cities and Counties, or other local permitting authority, must regulate certain development "projects" within the zones. They must withhold the development permits for a site within a zone until the geologic and soil conditions of the site are investigated and appropriate mitigation measures, if any, are incorporated into development plans.
- The State Mining and Geology Board provides additional regulations, policies, and criteria, to guide cities and counties in their implementation of the law. The Board also provides guidelines for preparation of the Seismic Hazard Zone Maps and for evaluating and mitigating seismic hazards.
- Sellers (and their agents) of real property within a mapped hazard zone must disclose that the property lies within such a zone at the time of sale.

Division of Mines and Geology

The California Division of Mines and Geology (DMG) operates within the Department of Conservation. The DMG is responsible for assisting in the utilization of mineral deposits and the identification of geological hazards.

State Geological Survey

Similar to the DMG, the CGS is responsible for assisting in the identification and proper utilization of mineral deposits, as well as the identification of fault locations and other geological hazards.

LOCAL

City of Irwindale General Plan

POLICIES: PUBLIC SAFETY

- **Policy 1.** The City of Irwindale will continue to review and if necessary, update its comprehensive emergency preparedness plan and hazard mitigation plan.
- **Policy 2.** The City of Irwindale, at a minimum, will maintain current emergency response standards.
- **Policy 3.** The City of Irwindale will work to reduce potential hazards through conscientious land use planning. The City shall require liquefaction assessment studies as part of development proposals in areas identified by the California Geological Survey as susceptible to liquefaction. The studies shall be conducted in accordance with the California Geological Survey's Special Publication 117; Guidelines for Evaluating and Mitigating Seismic Hazards in California, and the Southern California Earthquake Center's (1999) procedures to implement Special Publication 117 – Liquefaction Hazards (both documents are incorporated herein by reference). On sites shown to be susceptible to liquefaction, the City shall require the implementation of mitigation measures designed to reduce this hazard to an acceptable level. The City shall require a State certified engineering geologist or registered civil engineer; have competence in the field of seismic hazard evaluation and mitigation, to review the study at the Applicant's expense. The review shall determine the adequacy of the hazard evaluation and proposed mitigation measures and determine whether the requirements of State law are satisfied, as described in Special Publication 117 by the California Geological Survey.

3.3.3 IMPACTS AND MITIGATION MEASURES

THRESHOLDS OF SIGNIFICANCE

Consistent with Appendix G of the CEQA Guidelines, the proposed Project will have a significant impact on geology and soils if it will:

- Directly or indirectly cause potential substantial adverse effects, including the risk of loss, injury, or death involving:
    - Rupture of a known earthquake fault, as delineated on the most recent Alquist-Priolo Earthquake Fault Zoning Map, issued by the State Geologist for the area or based on other substantial evidence of a known fault. Refer to Division of Mines and Geology Special Publication 42; or
    - Strong seismic ground shaking; or
    - Seismic-related ground failure, including liquefaction; or

- Landslides;

- Be located on a geologic unit or soil that is unstable, or that would become unstable as a result of the project, and potentially result in on- or off-site landslide, lateral spreading, subsidence, liquefaction or collapse; or
- Be located on expansive soil, as defined in Table 18-1-B of the Uniform Building Code (1994), creating substantial risks to life or property.

IMPACTS AND MITIGATION MEASURES

Impact 3.3-1: The proposed Project may expose people or structures to potential substantial adverse effects involving strong seismic ground shaking or seismic related ground failure. (Less than Significant)

The U.S. Geological Survey identifies potential seismic sources within 32.2 kilometers (20 miles) of the Project site. The most significant active fault traces in the vicinity of the Project site are along the San Andreas, located approximately 18 miles northeast, the Newport-Inglewood and Whittier-Elsinore fault zones, located approximately 9.3 miles to the southwest, and the Raymond fault, located approximately 9.8 miles to the west. Other faults that could potentially affect the proposed project include the east Montebello fault, the Chino fault, the Cucamonga fault, and the San Gabriel fault. Figure 3.3-2 provides a map of known area faults.

Due to the site's location within the seismically active region of southern California, the Project site is expected to experience seismic ground shaking during the life of the proposed Project. Seismic activity could come from a known active fault such as the San Andreas fault, or any number of other faults in the region. In order to minimize potential damage to the buildings and site improvements, all construction in California is required to be designed in accordance with the latest seismic design standards of the California Building Code. As discussed under Section 3.3.2, Regulatory Setting, the California Building Code, Title 24, Part 2, Chapter 16 addresses structural design and Chapter 18 addresses soils and foundations. Collectively, these state requirements, which have been adopted by the City of Irwindale, include design standards and requirements that are intended to minimize impacts to structures in seismically active areas of California. Section 1613 specifically provides structural design standards for earthquake loads. Section 1803.5.11 and 1803.5.12 provide requirements for geotechnical investigations for structures assigned varying Seismic Design Categories in accordance with Section 1613. Additionally, the City of Irwindale has incorporated numerous policies within the City's General Plan relative to seismicity to ensure the health and safety of all people. Design in accordance with these policies would reduce any potential impact to a less than significant level. Because all development in the Project site must be designed in conformance with these state and local standards and policies, any potential impact would be considered **less than significant**.

Impact 3.3-2: The proposed Project has the potential to be located on a geologic unit or soil that is unstable, or that would become unstable as a result of Project implementation, and potentially result in landslide, lateral spreading, subsidence, liquefaction or collapse (Less than Significant with Mitigation)

LIQUEFACTION

Soil data suggests there is a moderate potential for liquefaction of the underlaying soils within the Project site. However, as a result of previous remediation, grading and compaction efforts, the potential for liquefaction on the Project site is considered low. The City of Irwindale 2020 General Plan Safety Element requires sites susceptible to liquefaction to implement mitigation measures to reduce liquefaction hazards to an acceptable, less than significant level. With implementation of Mitigation Measure 3.3-1 potential liquefaction impacts would be reduced to a less than significant level.

LATERAL SPREADING

Since the potential for liquefaction is low due to previous remediation, grading and compaction efforts, the potential for lateral spreading is also considered to be low. As stated, sites susceptible to liquefaction conditions would be required to implement mitigation measures to reduce the potential hazard associated with development. Thus, implementation of Mitigation Measure 3.3-1 would ensure potential impacts associated with lateral spreading are reduced to a less than significant level.

LANDSLIDES

The Project site is relatively flat as a result of remediation and engineering efforts. According to geologic site reviews, and site grading and compaction efforts, there are no slopes or topographical features within the area subject to landslides. The potential for landslides on the Project site is considered low.

COLLAPSIBLE SOILS

Since the potential for liquefaction is low due to previous remediation, grading and compaction efforts, the potential for collapsible soils is also considered to be low. However, as stated, sites susceptible to liquefaction conditions would be required to implement mitigation measures to reduce the potential hazard associated with development. Thus, implementation of Mitigation Measure 3.3-1 would ensure potential impacts associated with collapsible soils are reduced to a less than significant level.

SUBSIDENCE

Subsidence has not been identified in the Irwindale General Plan as an issue in the Irwindale area.

CONCLUSION

Soil analysis and management plans have been prepared for the Project site over the last 11 years, including an Excavation Management Plan for the Manning Pit – North Portion of Manning Pit, developed by The Source Group (2009) and a Grading Progress Report, developed by Tetra Tech BAS Geosciences (2015). The Excavation Management Plan was prepared in order to comply with the requirements of both the RWQCB and the SCAQMD. The Project site does not have a significant risk of becoming unstable as a result landslide, subsidence, or soil collapse. There is a potential for liquefaction, liquefaction induced settlement, and lateral spreading, of the underlaying soils. However, through the implementation of Mitigation Measure 3.3-1, the proposed Project would have a **less than significant** impact relative to this topic.

MITIGATION MEASURE(S)

Mitigation Measure 3.3-1*: Prior to any earthmoving activities, a certified geotechnical engineer, or equivalent, shall be retained to perform a final geotechnical evaluation of the soils at a design-level as required by the requirements of the California Building Code Title 24, Part 2, Chapter 18, Section 1803.1.1.2 related to expansive soils and other soil conditions. The evaluation shall be prepared in accordance with the standards and requirements outlined in California Building Code, Title 24, Part 2, Chapter 16, Chapter 17, and Chapter 18, which addresses structural design, tests and inspections, and soils and foundation standards. The final geotechnical evaluation shall include design recommendations to ensure that soil conditions do not pose a threat to the health and safety of people or structures, including threats from liquefaction, liquefaction induced settlement, or lateral spreading. The grading and improvement plans, as well as the storm drainage and building plans for the Project shall be designed in accordance with the recommendations provided in the final geotechnical evaluation.*

Impact 3.3-3: Potential for expansive soils to create substantial risks to life or property. (Less than Significant with Mitigation)

Although engineered artificial fills occur within the Project Site, seismic hazard zoning for expansive soils of the Project site is governed by the expansive susceptibility of natural soils underlying the fill sites. According to the NRCS Web Soil Survey, the soils in the Project site have a low shrink-swell potential. The NRCS Web Soil Survey indicates that near surface soils within the Project site have low plasticity, and the expansion potential of the soils would respond to fluctuations in moisture content.

The California Building Code Title 24, Part 2, Chapter 18, Section 1803.1.1.2 requires specific geotechnical evaluation when a preliminary geotechnical evaluation determines that expansive or other special soil conditions are present, which, if not corrected, would lead to structural defects. Collectively, these state requirements, which have been adopted by the City of Irwindale, include design standards and requirements that are intended to minimize impacts to structures in seismically active areas of California. Section 1613 specifically provides structural design standards for earthquake loads. Section 1803.5.11 and 1803.5.12 provide requirements for geotechnical investigations for structures assigned varying Seismic Design Categories in accordance with Section

1613. Design in accordance with these standards and policies would reduce any potential impact to the extent feasible.

Mitigation Measure 3.3-1, presented above, provides the requirement for a final geotechnical evaluation in accordance with the standards and requirements outlined in the California Building Code, Title 24, Part 2, Chapter 16, Chapter 17, and Chapter 18, which addresses structural design, tests and inspections, and soils and foundation standards. The final geotechnical evaluation would include design recommendations to ensure that soil conditions do not pose a threat to the health and safety of people or structures. The grading and improvement plans, as well as the storm drainage and building plans, are required to be designed in accordance with the recommendations provided in the final geotechnical evaluation. With the implementation of Mitigation Measure 3.3-1 (requiring a final Geotechnical Evaluation, and site recommendations) the proposed Project would have a **less than significant** impact relative to this topic.

MITIGATION MEASURE(S)

*Implement **Mitigation Measure 3.3-1**.*

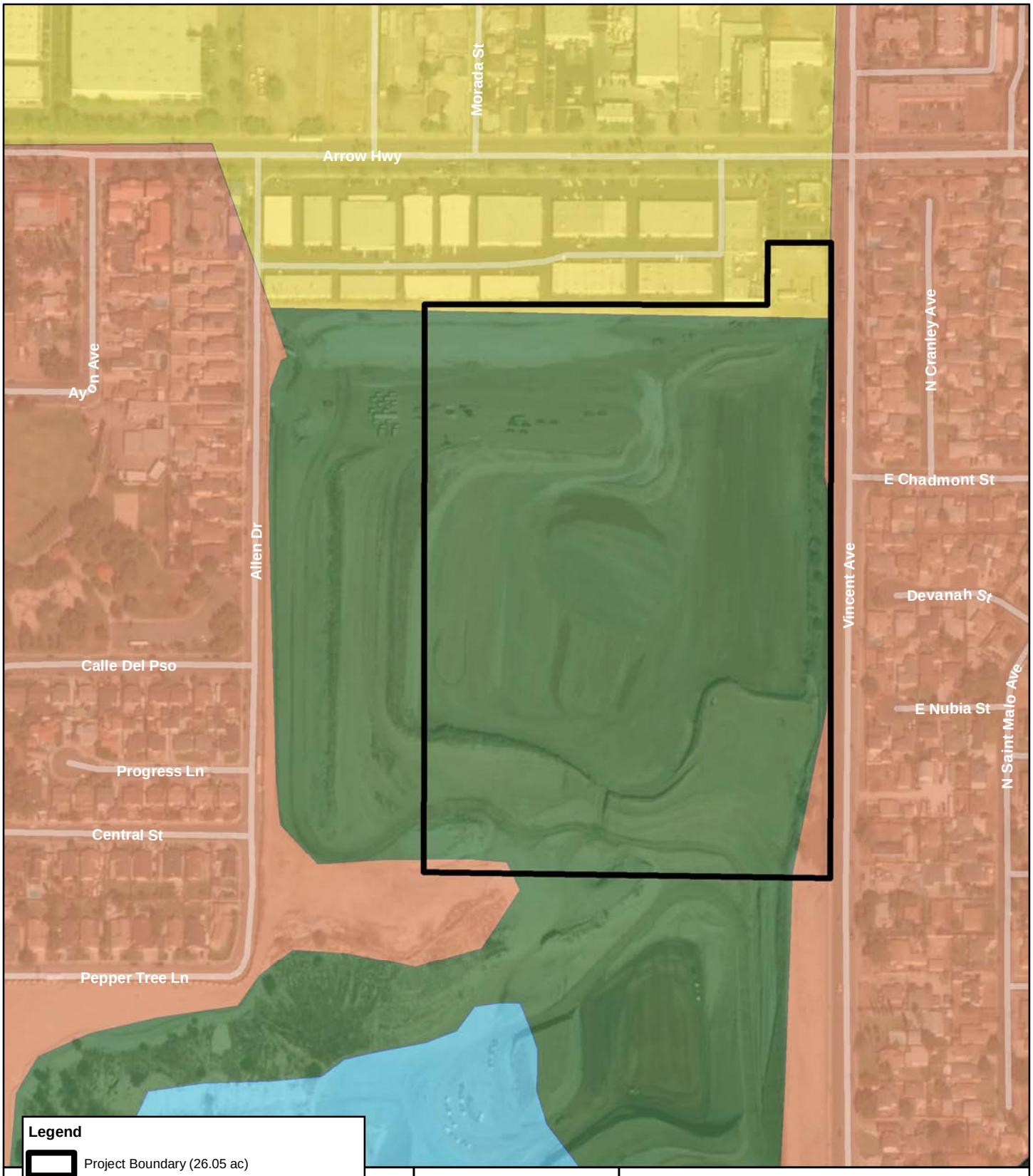

Source: U.S. Department of Agriculture, Natural Resource Conservation Servie, 20170912. Soil Survey Geographic (SSURGO) database for Los Angeles County, Southeastern Part. Los Angeles County; ArcGIS Online World Imagery Map Service. Map date: May 8, 2018. Revised May 15, 2018.

CITY OF IRWINDALE
5175 VINCENT AVENUE

Figure 3.3-1. Project Site Soils

De Novo Planning Group
A Land Use Planning, Design, and Environmental Firm

This page left intentionally blank.

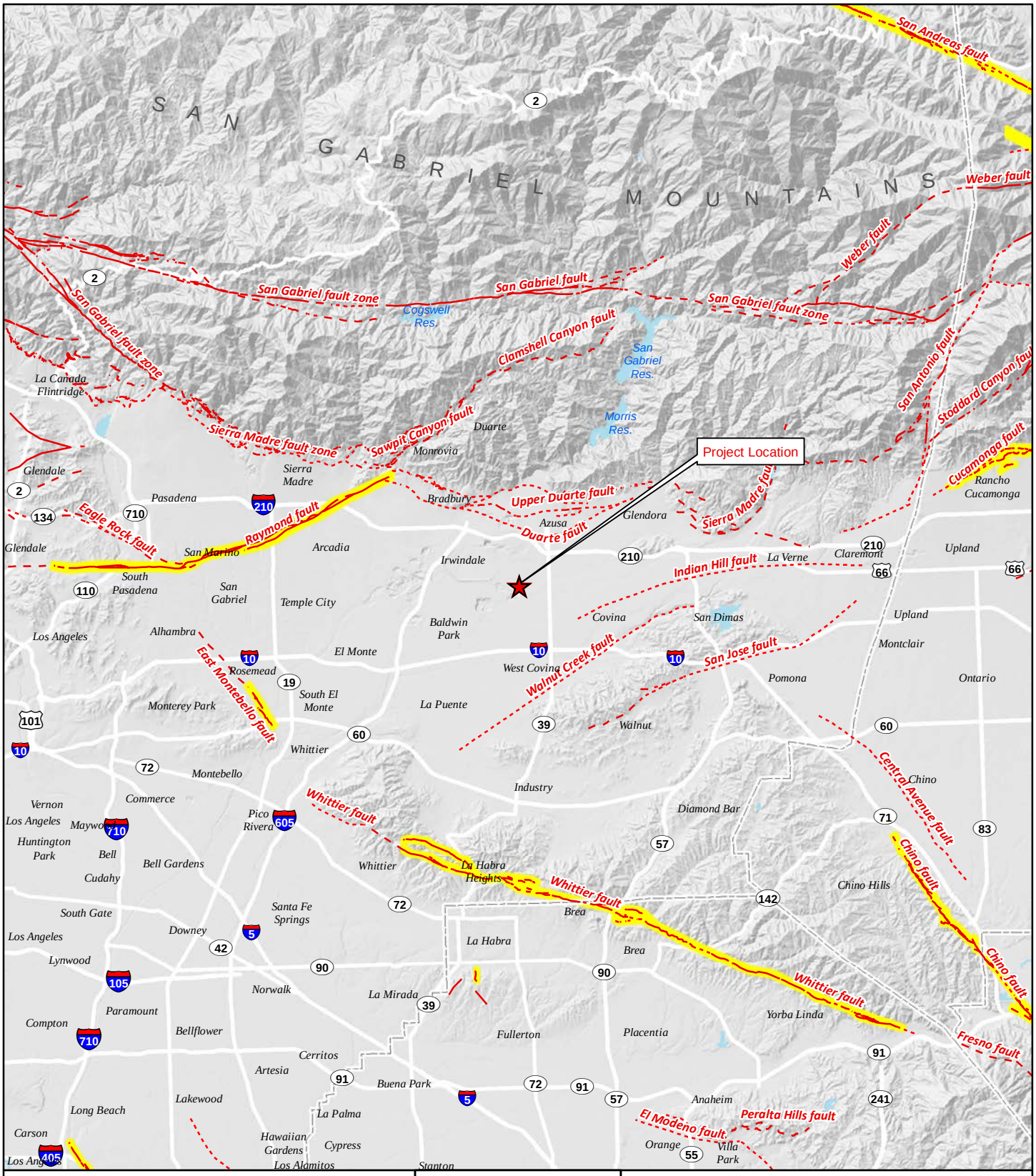

Legend

Quaternary Faults

- Well-constrained
- Moderately-constrained
- Inferred

Alquist-Priolo Fault Zones

Data sources: US Geologic Survey; CalAtlas; Open Streets. Map date: May 9, 2018.

N

0 1½ 3

Miles

CITY OF IRWINDALE
5175 VINCENT AVENUE

Figure 3.3-2. Earthquake Fault Map

De Novo Planning Group
A Land Use Planning, Design, and Environmental Firm

This page left intentionally blank.

The purpose of this section is to describe regional greenhouse gas (GHG) emissions, climate change, and energy conservation impacts that could result from implementation of the proposed Project. This section provides a background discussion of GHG and climate change linkages and effects of global climate change. This section also provides background discussion on the energy conservation components of the proposed Project. This section is organized with an existing setting, regulatory setting, approach/methodology, and impact analysis. The analysis and discussion of the GHG, climate change, and energy impacts in this section focuses on the proposed Project's consistency with local, regional, statewide, and federal climate change planning and energy conservation efforts and discusses the context of these planning efforts as they relate to the proposed Project. Disclosures of the proposed Project's total estimated energy usage and GHG emissions are provided. This section is based in part on the following: Air Quality and Land Use Handbook: A Community Health Perspective (California Air Resources Board, 2005), Air Quality Analysis Handbook (SCAQMD, 1993), Final 2016 AQMP (SCAQMD, 2017), 2016–2040 RTP/SCS (SCAG, 2016), CalEEMod (v.2016.3.2) (CAPCOA, 2013), Vincent Avenue Industrial Building Traffic Impact Analysis (Ganddini Group, 2020), and South Coast Air Quality Management District (SCAQMD) Rules and regulations.

Comments were received during the public review period or scoping meeting for the Notice of Preparation regarding this topic from the following: CARB (March 10, 2020) and SCAQMD (March 10, 2020). Full comments received are included in Appendix A.

3.4.1 ENVIRONMENTAL SETTING

GREENHOUSE GASES AND CLIMATE CHANGE LINKAGES

Various gases in the Earth's atmosphere, classified as atmospheric GHGs, play a critical role in determining the Earth's surface temperature. Solar radiation enters Earth's atmosphere from space, and a portion of the radiation is absorbed by the Earth's surface. The Earth emits this radiation back toward space, but the properties of the radiation change from high-frequency solar radiation to lower-frequency infrared radiation.

Naturally occurring GHGs include water vapor (H_2O), carbon dioxide (CO_2), methane (CH_4), nitrous oxide (N_2O), and ozone (O_3). Several classes of halogenated substances that contain fluorine, chlorine, or bromine are also GHGs, but they are, for the most part, solely a product of industrial activities. Although the direct GHGs CO_2, CH_4, and N_2O occur naturally in the atmosphere, human activities have changed their atmospheric concentrations. From the pre-industrial era (i.e., ending about 1750) to 2011, concentrations of these three GHGs have increased globally by 40, 150, and 20 percent, respectively (IPCC, 2013).

GHGs, which are transparent to solar radiation, are effective in absorbing infrared radiation. As a result, this radiation that otherwise would have escaped back into space is now retained, resulting in a warming of the atmosphere. This phenomenon is known as the greenhouse effect. Among the prominent GHGs contributing to the greenhouse effect are carbon dioxide (CO_2), methane (CH_4), ozone (O_3), water vapor, nitrous oxide (N_2O), and chlorofluorocarbons (CFCs).

Emissions of GHGs contributing to global climate change are attributable in large part to human activities associated with the industrial/manufacturing, utility, transportation, residential, and agricultural sectors. In California, the transportation sector is the largest emitter of GHGs, followed by the industrial and electricity generation sectors (California Energy Commission, 2020).

As the name implies, global climate change is a global problem. GHGs are global pollutants, unlike criteria air pollutants and toxic air contaminants, which are pollutants of regional and local concern, respectively. California produced 440 million gross metric tons of carbon dioxide equivalents ($MMTCO_2e$) in 2016 (California Air Resources Board, 2018a). By 2020, under business as usual conditions, California is projected to produce 509 $MMTCO_2e$ per year (California Air Resources Board, 2014a).

Carbon dioxide equivalents are a measurement used to account for the fact that different GHGs have different potential to retain infrared radiation in the atmosphere and contribute to the greenhouse effect. This potential, known as the global warming potential of a GHG, is also dependent on the lifetime, or persistence, of the gas molecule in the atmosphere. Expressing GHG emissions in carbon dioxide equivalents takes the contribution of all GHG emissions to the greenhouse effect and converts them to a single unit equivalent to the effect that would occur if only CO_2 were being emitted.

Consumption of fossil fuels in the transportation sector was the single largest source of California's GHG emissions in 2017, accounting for 41% of total GHG emissions in the state. This category was followed by the industrial sector (24%), the electricity generation sector (including both in-state and out of-state sources) (15%), the agriculture sector (8%), the residential energy consumption sector (7%), and the commercial energy consumption sector (5%) (California Air Resources Board, 2019).

EFFECTS OF GLOBAL CLIMATE CHANGE

The effects of increasing global temperature are far-reaching and extremely difficult to quantify. The scientific community continues to study the effects of global climate change. In general, increases in the ambient global temperature as a result of increased GHGs are anticipated to result in rising sea levels, which could threaten coastal areas through accelerated coastal erosion, threats to levees and inland water systems and disruption to coastal wetlands and habitat.

If the temperature of the ocean warms, it is anticipated that the winter snow season would be shortened. Snowpack in the Sierra Nevada provides both water supply (runoff) and storage (within the snowpack before melting), which is a major source of supply for the State. The snowpack portion of the supply could potentially decline by 50% to 75% by the end of the 21st century (National Resources Defense Council, 2014). This phenomenon could lead to significant challenges securing an adequate water supply for a growing state population. Further, the increased ocean temperature could result in increased moisture flux into the State; however, since this would likely increasingly come in the form of rain rather than snow in the high elevations, increased precipitation could lead to increased potential and severity of flood events, placing more pressure on California's levee/flood control system.

Sea level has risen approximately seven inches during the last century and it is predicted to rise an additional 22 to 35 inches by 2100, depending on the future GHG emissions levels (California Environmental Protection Agency, 2010). If this occurs, resultant effects could include increased coastal flooding, saltwater intrusion, and disruption of wetlands. As the existing climate throughout California changes over time, mass migration of species, or failure of species to migrate in time to adapt to the changed in climate, could also result. Under the emissions scenarios of the Climate Scenarios report (California Environmental Protection Agency, 2010), the impacts of global warming in California are anticipated to include, but are not limited to, the following.

Public Health

Higher temperatures are expected to increase the frequency, duration, and intensity of conditions conducive to air pollution formation. For example, days with weather conducive to ozone formation are projected to increase from 25% to 35% under the lower warming range and from 75% to 85% under the medium warming range. In addition, if global background ozone levels increase as predicted in some scenarios, it may become impossible to meet local air quality standards. Air quality could be further compromised by increases in wildfires, which emit fine particulate matter that can travel long distances depending on wind conditions. The Climate Scenarios report indicates that large wildfires could become up to 55% more frequent if GHG emissions are not significantly reduced.

In addition, under the higher warming scenario, there could be up to 100 more days per year with temperatures above 90°F in Los Angeles and 95°F in Sacramento by 2100. This is a large increase over historical patterns and approximately twice the increase projected if temperatures remain within or below the lower warming range. Rising temperatures will increase the risk of death from dehydration, heat stroke/exhaustion, heart attack, stroke, and respiratory distress caused by extreme heat.

Water Resources

A vast network of man-made reservoirs and aqueducts capture and transport water throughout the State from northern California rivers and the Colorado River. The current distribution system relies on Sierra Nevada snow pack to supply water during the dry spring and summer months. Rising temperatures, potentially compounded by decreases in precipitation, could severely reduce spring snow pack, increasing the risk of summer water shortages.

The State's water supplies are also at risk from rising sea levels. An influx of saltwater would degrade California's estuaries, wetlands, and groundwater aquifers. Saltwater intrusion caused by rising sea levels is a major threat to the quality and reliability of water within the southern edge of the Sacramento/San Joaquin River Delta, a major State fresh water supply. Global warming is also projected to seriously affect agricultural areas, with California farmers projected to lose as much as 25% of the water supply they need; decrease the potential for hydropower production within the State (although the effects on hydropower are uncertain); and seriously harm winter tourism. Under the lower warming range, the snow dependent winter recreational season at lower elevations could be reduced by as much as one month. If temperatures reach the higher warming range and

precipitation declines, there might be many years with insufficient snow for skiing, snowboarding, and other snow dependent recreational activities.

If GHG emissions continue unabated, more precipitation will fall as rain instead of snow, and the snow that does fall will melt earlier, reducing the Sierra Nevada spring snow pack by as much as 70% to 90%. Under the lower warming scenario, snow pack losses are expected to be only half as large as those expected if temperatures were to rise to the higher warming range. The amount of snow pack that will be lost depends in part on future precipitation patterns, the projections for which remain uncertain. However, even under the wetter climate projections, the loss of snow pack would pose challenges to water managers, hamper hydropower generation, and nearly eliminate all skiing and other snow-related recreational activities.

Agriculture

Increased GHG emissions are expected to cause widespread changes to the agriculture industry reducing the quantity and quality of agricultural products statewide. Although higher carbon dioxide levels can stimulate plant production and increase plant water-use efficiency, California's farmers will face greater water demand for crops and a less reliable water supply as temperatures rise.

Plant growth tends to be slow at low temperatures, increasing with rising temperatures up to a threshold. However, faster growth can result in less-than-optimal development for many crops, so rising temperatures are likely to worsen the quantity and quality of yield for a number of California's agricultural products. Products likely to be most affected include wine grapes, fruits and nuts, and milk.

Crop growth and development will be affected, as will the intensity and frequency of pest and disease outbreaks. Rising temperatures will likely aggravate ozone pollution, which makes plants more susceptible to disease and pests and interferes with plant growth.

In addition, continued global warming will likely shift the ranges of existing invasive plants and weeds and alter competition patterns with native plants. Range expansion is expected in many species while range contractions are less likely in rapidly evolving species with significant populations already established. Should range contractions occur, it is likely that new or different weed species will fill the emerging gaps. Continued global warming is also likely to alter the abundance and types of many pests, lengthen pests' breeding season, and increase pathogen growth rates.

Forests and Landscapes

Global warming is expected to alter the distribution and character of natural vegetation thereby resulting in a possible increased risk of large wildfires. If temperatures rise into the medium warming range, the risk of large wildfires in California could increase by as much as 55%, which is almost twice the increase expected if temperatures stay in the lower warming range. However, since wildfire risk is determined by a combination of factors, including precipitation, winds, temperature, and landscape and vegetation conditions, future risks will not be uniform throughout the State. For example, if precipitation increases as temperatures rise, wildfires in southern California are

expected to increase by approximately 30% toward the end of the century. In contrast, precipitation decreases could increase wildfires in northern California by up to 90%.

Moreover, continued global warming will alter natural ecosystems and biological diversity within the State. For example, alpine and sub-alpine ecosystems are expected to decline by as much as 60% to 80% by the end of the century as a result of increasing temperatures. The productivity of the State's forests is also expected to decrease as a result of global warming.

Rising Sea Levels

Rising sea levels, more intense coastal storms, and warmer water temperatures will increasingly threaten the State's coastal regions. Under the higher warming scenario, sea level is anticipated to rise 22 to 35 inches by 2100. Elevations of this magnitude would inundate coastal areas with saltwater, accelerate coastal erosion, threaten vital levees and inland water systems, and disrupt wetlands and natural habitats.

ENERGY CONSUMPTION

Energy in California is consumed from a wide variety of sources. Fossil fuels (including gasoline and diesel fuel, natural gas, and energy used to generate electricity) are the most widely used form of energy in the State. However, renewable sources of energy (such as solar and wind) are growing in proportion to California's overall energy mix. A large driver of renewable sources of energy in California is the State's current Renewable Portfolio Standard (RPS), which requires the State to derive at least 33% of electricity generated from renewable resources by 2020, 60 percent by 2030, and to achieve zero-carbon emissions by 2045 (as passed in September 2018, under AB 100).

Overall, in 2018, California's per capita energy usage was ranked fourth-lowest in the nation (U.S. EIA, 2020). California's per capita rate of energy usage has remained relatively constant since the 1970s. Many State regulations since the 1970s, including new building energy efficiency standards, vehicle fleet efficiency measures, as well as growing public awareness, have helped to keep per capita energy usage in the State at lower levels.

The consumption of non-renewable energy (i.e. fossil fuels) associated with the operation of passenger, public transit, and commercial vehicles, results in GHG emissions that contribute to global climate change. Alternative fuels such as natural gas, ethanol, and electricity (unless derived from solar, wind, nuclear, or other energy sources that do not produce carbon emissions) also result in GHG emissions and contribute to global climate change.

Electricity Consumption

California relies on a regional power system composed of a diverse mix of natural gas, renewable, hydroelectric, and nuclear generation resources. In 2016, more than one-fourth of the electricity supply came from facilities outside of the State. Much of the power delivered to California from states in the Pacific Northwest was generated by wind. States in the Southwest delivered power generated at coal-fired power plants, at natural gas-fired power plants, and from nuclear generating stations (U.S. EIA, 2017a). In 2016, approximately 50 percent of California's utility-scale net electricity generation was fueled by natural gas. In addition, about 25 percent of the State's utility-

scale net electricity generation came from non-hydroelectric renewable technologies, such as solar, wind, geothermal, and biomass. Another 14 percent of the State's utility-scale net electricity generation came from hydroelectric generation, and nuclear energy powered an additional 11 percent. The amount of electricity generated from coal was negligible (approximately 0.2 percent) (U.S. EIA, 2017). The percentage of renewable resources as a proportion of California's overall energy portfolio is increasing over time, as directed by the State's Renewable Portfolio Standard (RPS).

According to the California Energy Commission (CEC), total statewide electricity consumption increased from 166,979 gigawatt-hours (GWh) in 1980 to 228,038 GWh in 1990, which is an estimated annual growth rate of 3.66 percent. The statewide electricity consumption in 1997 was 246,225 GWh, reflecting an annual growth rate of 1.14 percent between 1990 and 1997 (U.S. EIA, 2017). Statewide consumption was 274,985 GWh in 2010, an annual growth rate of 0.9 percent between 1997 and 2010. In 2018, electricity consumption in Los Angeles County was 68,486 GWh (California Energy Commission, 2018).

Oil

The primary energy source for the United States is oil, which is refined to produce fuels like gasoline, diesel, and jet fuel. Oil is a finite, nonrenewable energy source. World consumption of petroleum products has grown steadily in the last several decades. As of 2016, world consumption of oil had reached 96 million barrels per day. The United States, with approximately five percent of the world's population, accounts for approximately 19 percent of world oil consumption, or approximately 18.6 million barrels per day (International Energy Agency, 2018). The transportation sector relies heavily on oil. In California, petroleum-based fuels currently provide approximately 96 percent of the State's transportation energy needs.

Natural Gas/Propane

The State produces approximately 12 percent of its natural gas, while obtaining 22 percent from Canada and 65 percent from the Rockies and the Southwest (California Energy Commission, 2012). In 2006, California produced 325.6 billion cubic feet of natural gas (California Energy Commission, 2012). Southern California Gas (SoCalGas) is the largest publicly-owned utility in California and provides natural gas for residential, industrial, and agency consumers within the Los Angeles County area, including the City of Irwindale. In 2018, natural gas consumption in Los Angeles County was 2,921 million therms (California Energy Commission, 2018).

3.4.2 REGULATORY SETTING

FEDERAL

Federal Clean Air Act

The Federal Clean Air Act (FCAA) was first signed into law in 1970. In 1977, and again in 1990, the law was substantially amended. The FCAA is the foundation for a national air pollution control effort, and it is composed of the following basic elements: NAAQS for criteria air pollutants, hazardous air

pollutant standards, State attainment plans, National Ambient Air Quality Standards (NAAQS) motor vehicle emissions standards, stationary source emissions standards and permits, acid rain control measures, stratospheric ozone protection, and enforcement provisions.

The EPA is responsible for administering the FCAA. The FCAA requires the EPA to set NAAQS for several problem air pollutants based on human health and welfare criteria. Two types of NAAQS were established: primary standards, which protect public health, and secondary standards, which protect the public welfare from non-health-related adverse effects such as visibility reduction.

On April 2, 2007, in the court case of *Massachusetts et al. vs. the USEPA et al*. (549 U.S. 497), the U.S. Supreme Court found that GHGs are air pollutants covered by the federal Clean Air Act (42 USC §§ 7401-7671q). The Supreme Court held that the Administrator of the United States Environmental Protection Agency must determine whether or not emissions of GHGs from new motor vehicles cause or contribute to air pollution, which may reasonably be anticipated to endanger public health or welfare, or whether the science is too uncertain to make a reasoned decision. In making these decisions, the Administrator is required to follow the language of Section 202(a) of the Clean Air Act. On December 7, 2009, the Administrator signed two distinct findings regarding GHGs under Section 202(a) of the Clean Air Act:

- Endangerment Finding: The Administrator finds that the current and projected concentrations of the six key well-mixed GHGs (carbon dioxide, methane, nitrous oxide, hydrofluorocarbons, perfluorocarbons, and sulfur hexafluoride) in the atmosphere threaten the public health and welfare of current and future generations.

- Cause or Contribute Finding: The Administrator finds that the combined emissions of these well-mixed GHGs from new motor vehicles and new motor vehicle engines contribute to the GHG pollution, which threatens public health and welfare.

These findings do not themselves impose any requirements on industry or other entities. However, this action was a prerequisite for implementing GHG emission standards for vehicles. In collaboration with the National Highway Traffic Safety Administration (NHTSA) and CARB, the USEPA developed emission standards for light-duty vehicles (2012-2025 model years), and heavy-duty vehicles (2014-2027 model years).

Energy Policy and Conservation Act

The Energy Policy and Conservation Act of 1975 sought to ensure that all vehicles sold in the U.S. would meet certain fuel economy goals. Through this Act, Congress established the first fuel economy standards for on-road motor vehicles in the United States. Pursuant to the Act, the National Highway Traffic and Safety Administration, which is part of the U.S. Department of Transportation (USDOT), is responsible for establishing additional vehicle standards and for revising existing standards.

Since 1990, the fuel economy standard for new passenger cars has been 27.5 miles per gallon (mpg). Since 1996, the fuel economy standard for new light trucks (gross vehicle weight of 8,500 pounds or less) has been 20.7 mpg. Heavy-duty vehicles (i.e., vehicles and trucks over 8,500 pounds gross

vehicle weight) are not currently subject to fuel economy standards. Compliance with federal fuel economy standards is determined on the basis of each manufacturer's average fuel economy for the portion of its vehicles produced for sale in the U.S. The Corporate Average Fuel Economy (CAFE) program, which is administered by the EPA, was created to determine vehicle manufacturers' compliance with the fuel economy standards. The EPA calculates a CAFE value for each manufacturer based on city and highway fuel economy test results and vehicle sales. Based on the information generated under the CAFE program, the USDOT is authorized to assess penalties for noncompliance.

Energy Policy Act of 1992 (EPAct)

The Energy Policy Act of 1992 (EPAct) was passed to reduce the country's dependence on foreign petroleum and improve air quality. EPAct includes several parts intended to build an inventory of alternative fuel vehicles (AFVs) in large, centrally fueled fleets in metropolitan areas. EPAct requires certain federal, State, and local government and private fleets to purchase a percentage of light duty AFVs capable of running on alternative fuels each year. In addition, financial incentives are included in EPAct. Federal tax deductions will be allowed for businesses and individuals to cover the incremental cost of AFVs. States are also required by the act to consider a variety of incentive programs to help promote AFVs.

Energy Policy Act of 2005

The Energy Policy Act of 2005 was signed into law on August 8, 2005. Generally, the act provides for renewed and expanded tax credits for electricity generated by qualified energy sources, such as landfill gas; provides bond financing, tax incentives, grants, and loan guarantees for a clean renewable energy and rural community electrification; and establishes a federal purchase requirement for renewable energy.

Federal Climate Change Policy

According to the EPA, "the United States government has established a comprehensive policy to address climate change" that includes slowing the growth of emissions; strengthening science, technology, and institutions; and enhancing international cooperation. To implement this policy, "the Federal government is using voluntary and incentive-based programs to reduce emissions and has established programs to promote climate technology and science." The EPA administers multiple programs that encourage voluntary GHG reductions, including "ENERGY STAR", "Climate Leaders", and Methane Voluntary Programs. However, as of this writing, there are no adopted federal plans, policies, regulations, or laws directly regulating GHG emissions.

Mandatory Greenhouse Gas Reporting Rule

On September 22, 2009, EPA issued a final rule for mandatory reporting of GHGs from large GHG emissions sources in the United States. In general, this national reporting requirement will provide EPA with accurate and timely GHG emissions data from facilities that emit 25,000 metric tons or more of CO_2 per year. This publicly available data will allow the reporters to track their own emissions, compare them to similar facilities, and aid in identifying cost effective opportunities to reduce emissions in the future. Reporting is at the facility level, except that certain suppliers of fossil

fuels and industrial GHGs along with vehicle and engine manufacturers will report at the corporate level. An estimated 85% of the total U.S. GHG emissions, from approximately 10,000 facilities, are covered by this final rule.

STATE

The California Legislature has enacted a series of statutes in recent years addressing the need to reduce GHG emissions all across the State. These statutes can be categorized into four broad categories: (i) statutes setting numerical statewide targets for GHG reductions, and authorizing CARB to enact regulations to achieve such targets; (ii) statutes setting separate targets for increasing the use of renewable energy for the generation of electricity throughout the State; (iii) statutes addressing the carbon intensity of vehicle fuels, which prompted the adoption of regulations by CARB; and (iv) statutes intended to facilitate land use planning consistent with statewide climate objectives. The discussion below will address each of these key sets of statutes, as well as CARB "Scoping Plans" intended to achieve GHG reductions under the first set of statutes and recent building code requirements intended to reduce energy consumption.

Statutes Setting Statewide GHG Reduction Targets

ASSEMBLY BILL 32 (GLOBAL WARMING SOLUTIONS ACT)

In September 2006, the California State Legislature enacted the California Global Warming Solutions Act of 2006 (Health & Saf. Code, § 38500 et seq.), also known as Assembly Bill (AB) 32 (Stats. 2006, ch. 488). AB 32 establishes regulatory, reporting, and market mechanisms to achieve quantifiable reductions in GHG emissions and a cap on statewide GHG emissions. AB 32 requires that statewide GHG emissions be reduced to 1990 levels by 2020. This reduction will be accomplished through an enforceable statewide cap on GHG emissions that was phased in starting in 2012. To effectively implement the cap, AB 32 directs the California Air Resources Board (CARB) to develop and implement regulations to reduce statewide GHG emissions from stationary sources.

SENATE BILL 32

Effective January 1, 2017, SB 32 (Stats. 2016, ch. 249) added a new section 38566 to the Health and Safety Code. It provides that "[i]n adopting rules and regulations to achieve the maximum technologically feasible and cost-effective greenhouse gas emissions reductions authorized by [Division 25.5 of the Health and Safety Code], [CARB] shall ensure that statewide greenhouse gas emissions are reduced to at least 40 percent below the statewide greenhouse gas emissions limit no later than December 31, 2030." In other words, SB 32 requires California, by the year 2030, to reduce its statewide GHG emissions so that they are 40 percent below those that occurred in 1990.

Between AB 32 (2006) and SB 32 (2016), the Legislature has codified some of the ambitious GHG reduction targets included within certain high-profile Executive Orders issued by the last two Governors. The 2020 statewide GHG reduction target in AB 32 was consistent with the second of three statewide emissions reduction targets set forth in former Governor Arnold Schwarzenegger's 2005 Executive Order known as S-3-05, which is expressly mentioned in AB 32. (See Health & Saf. Code, § 38501, subd. (i).) That Executive Branch document included the following GHG emission

reduction targets: by 2010, reduce GHG emissions to 2000 levels; by 2020, reduce GHG emissions to 1990 levels; by 2050, reduce GHG emissions to 80 percent below 1990 levels. To meet the targets, the Governor directed several State agencies to cooperate in the development of a climate action plan. The Secretary of Cal-EPA leads the Climate Action Team, whose goal is to implement global warming emission reduction programs identified in the Climate Action Plan and to report on the progress made toward meeting the emission reduction targets established in the executive order.

In April 2015, Governor Brown issued another Executive Order, B-30-15, which created a "new interim statewide GHG emission reduction target to reduce GHG emissions to 40 percent below 1990 levels by 2030 is established in order to ensure California meets its target of reducing GHG emissions to 80 percent below 1990 levels by 2050." SB 32 codified this target.

In September 2018, the Governor issued Executive Order B-55-18, which established a statewide goal to "achieve carbon neutrality as soon as possible, and no later than 2045, and maintain and achieve negative emissions thereafter." The order directs the CARB to work with other State agencies to identify and recommend measures to achieve those goals.

Notably, the Legislature has not yet set a 2045 or 2050 target in the manner done for 2020 and 2030 through AB 32 and SB 32, though references to a 2050 target can be found in statutes outside the Health and Safety Code. In the 2015 legislative session, the Legislature passed Senate Bill 350 (SB 350) (Stats. 2015, ch. 547) (discussed in more detail below). This legislation added to the Public Utilities Code language that essentially puts into statute the 2050 GHG reduction target already identified in Executive Order S-3-05, albeit in the limited context of new state policies (i) increasing the overall share of electricity that must be produced through renewable energy sources and (ii) directing certain State agencies to begin planning for the widespread electrification of the California vehicle fleet. Section 740.12(a)(1)(D) of the Public Utilities Code now states that "[t]he Legislature finds and declares [that] … [r]educing emissions of [GHGs] to 40 percent below 1990 levels by 2030 and to 80 percent below 1990 levels by 2050 will require widespread transportation electrification." Furthermore, Section 740.12(b) now states that the California Public Utilities Commission (PUC), in consultation with CARB and the California Energy Commission (CEC), must "direct electrical corporations to file applications for programs and investments to accelerate widespread transportation electrification to reduce dependence on petroleum, meet air quality standards, … and reduce emissions of greenhouse gases to 40 percent below 1990 levels by 2030 and to 80 percent below 1990 levels by 2050."

Statutes Setting Targets for the Use of Renewable Energy for the Generation of Electricity

CALIFORNIA RENEWABLES PORTFOLIO STANDARD

In September 2002, the Legislature enacted Senate Bill 1078 (Stats. 2002, ch. 516), which established the Renewables Portfolio Standard program, requiring retail sellers of electricity, including electrical corporations, community choice aggregators, and electric service providers, to purchase a specified minimum percentage of electricity generated by eligible renewable energy resources such as wind, solar, geothermal, small hydroelectric, biomass, anaerobic digestion, and landfill gas. (See Pub.

Utilities Code, § 399.11 et seq. [subsequently amended].) The legislation set a target by which 20 percent of the State's electricity would be generated by renewable sources. (Pub. Utility Code, § 399.11, subd (a) [subsequently amended].) As described in the Legislative Counsel's Digest, Senate Bill 1078 required "[e]ach electrical corporation … to increase its total procurement of eligible renewable energy resources by at least one percent per year so that 20 percent of its retail sales are procured from eligible renewable energy resources. If an electrical corporation fails to procure sufficient eligible renewable energy resources in a given year to meet an annual target, the electrical corporation would be required to procure additional eligible renewable resources in subsequent years to compensate for the shortfall, if funds are made available as described. An electrical corporation with at least 20 percent of retail sales procured from eligible renewable energy resources in any year would not be required to increase its procurement in the following year."

In September 2006, the Legislature enacted Senate Bill 107 (Stats. 2006, ch. 464), which modified the Renewables Portfolio Standard to require that at least 20 percent of electricity retail sales be served by renewable energy resources by year 2010. (Pub. Utility Code, § 399.11, subd (a) [subsequently amended].)

In April 2011, the Legislature, in a special session, enacted Senate Bill X1-2 (Stats. 2011, 1st Ex. Sess., ch. 1), which set even more aggressive statutory targets for renewable electricity, culminating in the requirement that 33 percent of the State's electricity come from renewables by 2020. This legislation applies to all electricity retailers in the State, including publicly owned utilities, investor-owned utilities, electricity service providers, and community choice aggregators. All of these entities must meet renewable energy goals of 20 percent of retail sales from renewables by the end of 2013, 25 percent by the end of 2016, and 33 percent by the end of 2020. (See Pub. Utility Code, § 399.11 et seq. [subsequently amended].)

In 2015, the Legislature enacted Senate Bill 350 (SB 350) (Stats. 2015, ch. 547) (discussed above). It increases the Renewable Portfolio Standard to require 50 percent of electricity generated to be from renewables by 2030. (Pub. Utility Code, § 399.11, subd (a); see also § 399.30, subd. (c)(2).) Of equal significance, Senate Bill 350 also embodies a policy encouraging a substantial increase in the use of electric vehicles. As noted earlier, Section 740.12(b) of the Public Utilities Code now states that the PUC, in consultation with CARB and the CEC, must "direct electrical corporations to file applications for programs and investments to accelerate widespread transportation electrification to reduce dependence on petroleum, meet air quality standards, … and reduce emissions of greenhouse gases to 40 percent below 1990 levels by 2030 and to 80 percent below 1990 levels by 2050."

In March 2012, Governor Brown issued an Executive Order, B-16-12, which embodied a similar vision of a future in which zero-emission vehicles (ZEV) will play a big part in helping the State meet its GHG reduction targets. Executive Order B-16-12 directed State government to accelerate the market for ZEVs in California through fleet replacement and electric vehicle infrastructure. The Executive Order set the following targets:

- By 2015, all major cities in California will have adequate infrastructure and be "ZEV ready";
- By 2020, the State will have established adequate infrastructure to support 1 million ZEVs in California;

- By 2025, there will be 1.5 million ZEVs on the road in California; and
- By 2050, virtually all personal transportation in the State will be based on ZEVs, and GHG emissions from the transportation sector will be reduced by 80 percent below 1990 levels.

In 2018, the Legislature enacted, and the Governor signed, Senate Bill 100 (Stats. 2018, ch. 312), which revises the above-described deadlines and targets so that the State will have to achieve a 50% renewable resources target by December 31, 2026 (instead of by 2030) and achieve a 60% target by December 31, 2030. The legislation also establishes a State policy that eligible renewable energy resources and zero-carbon resources supply 100% of retail sales of electricity to California end-use customers and 100% of electricity procured to serve all State agencies by December 31, 2045.

In summary, California has set a statutory goal of requiring that, by the year 2030, 60 percent of the electricity generated in California should be from renewable sources, with increased generation capacity intended to sufficiently allow the mass conversion of the statewide vehicle fleet from petroleum-fueled vehicles to electrical vehicles and/or other ZEVs. By 2045, all electricity must come from renewable resources and other carbon-free resources. Former Governor Brown had an even more ambitious goal for the State of achieving carbon neutrality as soon as possible and by no later than 2045. The Legislature is thus looking to California drivers to buy electric cars, powered by green energy, to help the State meet its aggressive statutory goal, created by SB 32, of reducing statewide GHG emissions by 2030 to 40 percent below 1990 levels. Another key prong to this strategy is to make petroleum-based fuels less carbon-intensive. A number of statutes in recent years have addressed that strategy. These are discussed immediately below.

Statutes and CARB Regulations Addressing the Carbon Intensity of Petroleum-based Transportation Fuels

ASSEMBLY BILL 1493, PAVLEY CLEAN CARS STANDARDS

In July 2002, the Legislature enacted Assembly Bill 1493 ("Pavley Bill") (Stats. 2002, ch. 200), which directed the CARB to develop and adopt regulations that achieve the maximum feasible reduction of GHGs emitted by passenger vehicles and light-duty trucks beginning with model year 2009. (See Health & Saf. Code, § 43018.5.) In September 2004, pursuant to this directive, CARB approved regulations to reduce GHG emissions from new motor vehicles beginning with the 2009 model year. These regulations created what are commonly known as the "Pavley standards." In September 2009, CARB adopted amendments to the Pavley standards to reduce GHG emissions from new motor vehicles through the 2016 model year. These regulations created what are commonly known as the "Pavley II standards." (See California Code of Regulations, Title 13, §§ 1900, 1961, and 1961.1 et seq.)

In January 2012, CARB adopted an Advanced Clean Cars (ACC) program aimed at reducing both smog-causing pollutants and GHG emissions for vehicles model years 2017-2025. This historic program, developed in coordination with the USEPA and NHTSA, combined the control of smog-causing (criteria) pollutants and GHG emissions into a single coordinated set of requirements for model years 2015 through 2025. The regulations focus on substantially increasing the number of plug-in hybrid cars and zero-emission vehicles in the vehicle fleet and on making fuels such as

electricity and hydrogen readily available for these vehicle technologies. The components of the ACC program are the Low-Emission Vehicle (LEV) regulations that reduce criteria pollutants and GHG emissions from light- and medium-duty vehicles, and the Zero-Emission Vehicle (ZEV) regulation, which requires manufacturers to produce an increasing number of pure ZEVs (meaning battery electric and fuel cell electric vehicles), with provisions to also produce plug-in hybrid electric vehicles in the 2018 through 2025 model years. (See California Code of Regulations, Title 13, §§ 1900, 1961, 1961.1, 1961.2, 1961.3, 1965, 1968.2, 1968.5, 1976, 1978, 2037, 2038, 2062, 2112, 2139, 2140, 2145, 2147, 2235, and 2317 et seq.)

It is expected that the Pavley regulations will reduce GHG emissions from California passenger vehicles by about 34 percent below 2016 levels by 2025, all while improving fuel efficiency and reducing motorists' costs.

Cap and Trade Program

On October 20, 2011, in a related action, CARB adopted the final cap-and-trade program for California. (See California Code of Regulations, Title 17, §§ 95801-96022.) The California cap-and-trade program will create a market-based system with an overall emissions limit for affected sectors. The program is intended to regulate more than 85 percent of California's emissions and staggers compliance requirements according to the following schedule: (1) electricity generation and large industrial sources (2012); (2) fuel combustion and transportation (2015).

According to 2012 guidance published by CARB, "[t]he Cap-and-Trade Program will reduce GHG emissions from major sources (covered entities) by setting a firm cap on statewide GHG emissions while employing market mechanisms to cost-effectively achieve the emission-reduction goals. The statewide cap for GHG emissions from major sources, which is measured in metric tons of carbon dioxide equivalent (MTCO2e), will commence in 2013 and decline over time, achieving GHG emission reductions throughout the program's duration. Each covered entity will be required to surrender one permit to emit (the majority of which will be allowances, entities are also allowed to use a limited number of CARB offset credits) for each ton of GHG emissions they emit. Some covered entities will be allocated some allowances and will be able to buy additional allowances at auction, purchase allowances from others, or purchase offset credits."

The guidance goes on to say that "[s]tarting in 2012, major GHG-emitting sources, such as electricity generation (including imports), and large stationary sources (e.g., refineries, cement production facilities, oil and gas production facilities, glass manufacturing facilities, and food processing plants) that emit more than 25,000 $MTCO_2e$ per year will have to comply with the Cap-and-Trade Program. The program expands in 2015 to include fuel distributors (natural gas and propane fuel providers and transportation fuel providers) to address emissions from transportation fuels, and from combustion of other fossil fuels not directly covered at large sources in the program's initial phase." In early April 2017, the Third District Court of Appeal upheld the lawfulness of the cap-and-trade program as a "fee" rather than a "tax." (See *California Chamber of Commerce et al. v. State Air Resources Board et al.* (2017) 10 Cal.App.5th 604.)

In early 2017, the Legislature enacted, and the Governor signed, AB 398 (Stats. 2017, ch. 135), which extended the life of the existing Cap and Trade Program through December 2030.

The offsets used within the Cap and Trade program must meet rigorous standards set forth in AB 32. Thus, any reduction of GHG emissions used for compliance purposes must be real, permanent, quantifiable, verifiable, enforceable, and additional (Health and Safety Code § 38562(d)(1) and (2)). Meeting these criteria ensures the integrity of the CARB offset credit and its eligibility for use in the Cap-and-Trade Program. Any offset credits issued by CARB must be quantified according to CARB-approved Compliance Offset Protocols. The applicable CARB regulations (Cal. Code Regs., tit. 17, § 95970 et seq.) include provisions for collecting and submitting the appropriate monitoring and reporting documentation to support the verification and enforcement of reductions realized through the generation of CARB offset credits. The regulatory provisions and the requirements of the Compliance Offset Protocols will ensure that the reductions are quantified accurately, represent real GHG emissions reduction, and are not double-counted within the Cap-and-Trade Program.

All compliance offset projects must be determined to be in conformance with all state, federal, and local environmental, health, and safety regulations applicable to the offset project location before CARB issues CARB offset credits. This determination ensures that CARB only credits reductions that result from activities that are in compliance with applicable requirements. Offset Project Operators (OPO) and Authorized Project Designees (APD) are voluntary participants in the Cap-and-Trade Program and CARB must ensure that it does not incentivize projects that violate applicable regulations while being implemented and credited for GHG reductions and removal enhancements. In addition, compliance offset projects may occur outside the State, and therefore, the regulatory conformance determination serves to ensure that projects credited under California's program are meeting applicable regulations in the various states.

The Regulations also include a mechanism called invalidation that may be triggered after CARB offset credits have been issued. Even though CARB has a rigorous and multistep review process prior to the issuance of ARB offset credits, subsequent new information may result in a determination that the CARB offset credits were generated from projects that did not conform to the requirements of the Regulation. The invalidation process ensures that the program's environmental integrity, or true accounting of GHG emissions and GHG emission reductions, is maintained if a CARB offset credit is issued and then used for compliance and later found to not meet the requirements of the Regulation. CARB may implement its invalidation provisions if it finds that a CARB offset credit does not meet the requirements of the Regulation. If CARB determines that a CARB offset credit is invalid after it is issued, CARB will cancel the CARB offset credit in the Compliance Instrument Tracking System Service (CITSS) and the user of the CARB offset credit is required to replace it with another valid compliance instrument if that offset credit was surrendered and retired for compliance. If the CARB offset credit is invalidated, but has not been surrendered and retired for compliance, CARB does not require the account holder to replace that offset credit with another valid compliance instrument; however, that offset credit would no longer be available to be surrendered for compliance at a later time or traded to another market participant. Requiring the user to replace the invalidated CARB offset credit with another valid CRB offset credit or allowance, if it has been surrendered for compliance, ensures that purchasers and users of offsets do their due diligence in

seeking out offset credits that meet the full regulatory requirements. (CARB, *California Air Resources Board Offset Credit Regulatory Conformance and Invalidation Guidance* [Feb. 2015].)

Statutes Intended to Facilitate Land Use Planning Consistent with Statewide Climate Objectives

CALIFORNIA SENATE BILL 375 (SUSTAINABLE COMMUNITIES STRATEGY)

This 2008 legislation built on AB 32 by setting forth a mechanism for coordinating land use and transportation on a regional level for the purpose of reducing GHGs. The focus is to reduce miles traveled by passenger vehicles and light trucks. CARB is required to set GHG reduction targets for each metropolitan region for the years 2020 and 2035. Each of California's metropolitan planning organizations then prepares a sustainable communities strategy that demonstrates how the region will meet its GHG reduction target through integrated land use, housing, and transportation planning. Once adopted by the metropolitan planning organizations, the sustainable communities strategy is to be incorporated into that region's federally enforceable regional transportation plan. If a metropolitan planning organization is unable to meet the targets through the sustainable communities strategy, then an alternative planning strategy must be developed which demonstrates how targets could be achieved, even if meeting the targets is deemed to be infeasible.

The Southern California Association of Governments (SCAG) is the metropolitan planning organization responsible for preparing the SCS. For a description SCAG's responsibilities, see the discussion under the Southern California Association of Governments sub-header, under the Local Setting header, below.

Climate Change Scoping Plans

AB 32 SCOPING PLAN

In December 2008, CARB adopted the Climate Change Scoping Plan, which contains the main strategies California will implement to achieve reduction of approximately 118 million metric tons (MMT) CO_2e, or approximately 22 percent from the State's projected 2020 emission level of 545 MMT of CO_2e under a business-as-usual scenario. This is a reduction of 47 MMT CO_2e, or almost 10 percent, from 2008 emissions. CARB's original 2020 projection was 596 MMT CO_2e, but this revised 2020 projection takes into account the economic downturn that occurred in 2008. The Scoping Plan also includes CARB recommended GHG reductions for each emissions sector of the State GHG inventory. CARB estimates the largest reductions in GHG emissions would be by implementing the following measures and standards:

- Improved emissions standards for light-duty vehicles (26.1 MMT CO_2e);
- The Low Carbon Fuel Standard (15.0 MMT CO_2e);
- Energy efficiency measures in buildings and appliances (11.9 MMT CO_2e); and
- Renewable portfolio and electricity standards for electricity production (23.4 MMT CO_2e).

In 2011, CARB adopted a cap-and-trade regulation. The cap-and-trade program covers major sources of GHG emissions in the State such as refineries, power plants, industrial facilities, and

transportation fuels. The cap-and-trade program includes an enforceable emissions cap that will decline over time. The State distributes allowances, which are tradable permits, equal to the emissions allowed under the cap. Sources under the cap are required to surrender allowances and offsets equal to their emissions at the end of each compliance period. Enforceable compliance obligations started in 2013. The program applies to facilities that comprise 85 percent of the State's GHG emissions.

With regard to land use planning, the Scoping Plan expects that reductions of approximately 3.0 MMT CO_2e will be achieved through implementation of Senate Bill (SB) 375, which is discussed further below.

2014 SCOPING PLAN UPDATE

In response to comments on the 2008 Scoping Plan, and AB 32's requirement to update the Scoping Plan every five years, CARB revised and reapproved the Scoping Plan, and prepared the First Update to the 2008 Scoping Plan in 2014 (2014 Scoping Plan). The 2014 Scoping Plan contains the main strategies California will implement to achieve a reduction of 80 MMT of CO_2e emissions, or approximately 16 percent, from the State's projected 2020 emission level of 507 MMT of CO_2e under the business-as-usual scenario defined in the 2014 Scoping Plan. The 2014 Scoping Plan also includes a breakdown of the amount of GHG reductions CARB recommends for each emissions sector of the State's GHG inventory. Several strategies to reduce GHG emissions are included: the Low Carbon Fuel Standard, the Pavley Rule, the ACC program, the Renewable Portfolio Standard, and the Sustainable Communities Strategy.

2017 SB 32 SCOPING PLAN

With the passage of SB 32, the Legislature also passed companion legislation AB 197, which provides additional direction for developing the scoping plan. In response to these two pieces of legislation, CARB adopted an updated Scoping Plan in December 2017. The document represents a second update to the scoping plan to reflect the 2030 target of reducing statewide GHG emissions by 40 percent below 1990 levels codified by SB 32. The GHG reduction strategies in the plan that CARB will implement to meet the target include:

- SB 350 - achieve 50 percent Renewables Portfolio Standard (RPS) by 2030 and doubling of energy efficiency savings by 2030;
- Low Carbon Fuel Standard - increased stringency (reducing carbon intensity 18 percent by 2030, up from 10 percent in 2020);
- Mobile Source Strategy (Cleaner Technology and Fuels Scenario) - maintaining existing GHG standards for light- and heavy-duty vehicles, put 4.2 million zero-emission vehicles on the roads, and increase zero-emission buses, delivery and other trucks.
- Sustainable Freight Action Plan - improve freight system efficiency, maximize use of near-zero emission vehicles and equipment powered by renewable energy, and deploy over 100,000 zero-emission trucks and equipment by 2030;

- Short-Lived Climate Pollutant Reduction Strategy - reduce emissions of methane and hydrofluorocarbons 40 percent below 2013 levels by 2030 and reduce emissions of black carbon 50 percent below 2013 levels by 2030;
- SB 375 Sustainable Communities Strategies - increased stringency of 2035 targets;
- Post-2020 Cap-and-Trade Program - declining caps, continued linkage with Québec, and linkage to Ontario, Canada;
- 20 percent reduction in GHG emissions from the refinery sector; and
- By 2018, develop an Integrated Natural and Working Lands Action Plan to secure California's land base as a net carbon sink.

Building Code Requirements Intended to Reduce GHG Emissions

CALIFORNIA ENERGY CODE

The California Energy Code (California Code of Regulations, Title 24, Part 6), which is incorporated into the Building Energy Efficiency Standards, was first established in 1978 in response to a legislative mandate to reduce California's energy consumption. Although these standards were not originally intended to reduce GHG emissions, increased energy efficiency results in decreased GHG emissions because energy efficient buildings require less electricity and thus less consumption of fossil fuels, which emit GHGs. The standards are updated periodically to allow consideration and possible incorporation of new energy efficiency technologies and methods. The current 2019 Building Energy Efficiency Standards, commonly referred to as the "Title 24" standards, include changes from the previous standards that were adopted, to do the following:

- Provide California with an adequate, reasonably priced, and environmentally sound supply of energy.
- Respond to Assembly Bill 32, the Global Warming Solutions Act of 2006, which mandates that California must reduce its GHG emissions to 1990 levels by 2020.
- Pursue California energy policy that energy efficiency is the resource of first choice for meeting California's energy needs.
- Act on the California Energy Commission's Integrated Energy Policy Report, which finds that standards are the most cost effective means to achieve energy efficiency, states an expectation that the Building Energy Efficiency Standards will continue to be upgraded over time to reduce electricity and peak demand, and recognizes the role of the Building Energy Efficiency Standards in reducing energy related to meeting California's water needs and in reducing GHG emissions.
- Meet the West Coast Governors' Global Warming Initiative commitment to include aggressive energy efficiency measures into updates of State building codes.
- Meet Executive Order S-20-04, the Green Building Initiative, to improve the energy efficiency of non-residential buildings through aggressive standards.

The most recent Title 24 standards are the 2019 Title 24 standards. The 2019 Building Energy Efficiency Standards improve upon the 2016 Energy Standards for new construction of, and additions and alterations to, residential and nonresidential buildings. Buildings permitted on or after

January 1, 2020, must comply with the 2019 Standards. The California Energy Commission updates the standards every three years.

Single-family homes built with the 2019 standards will use about 7 percent less energy due to energy efficiency measures versus those built under the 2016 standards. Once rooftop solar electricity generation is factored in, homes built under the 2019 standards will use about 53 percent less energy than those under the 2016 standards. This will reduce greenhouse gas emissions by 700,000 metric tons over three years, equivalent to taking 115,000 fossil fuel cars off the road. Nonresidential buildings will use about 30 percent less energy due mainly to lighting upgrades.

CALIFORNIA GREEN BUILDING STANDARDS CODE

The purpose of the California Green Building Standards Code (California Code of Regulations Title 24, Part 11) is to improve public health and safety and to promote the general welfare by enhancing the design and construction of buildings through the use of building concepts having a reduced negative impact or positive environmental impact and encouraging sustainable construction practices in the following categories: 1) planning and design; 2) energy efficiency; 3) water efficiency and conservation; 4) material conservation and resource efficiency; and 5) environmental quality. The California Green Building Standards, which became effective on January 1, 2011, instituted mandatory minimum environmental performance standards for all ground-up new construction of commercial, low-rise residential uses, and State-owned buildings, as well as schools and hospitals. The mandatory standards require the following:

- 20 percent mandatory reduction in indoor water use relative to baseline levels;
- 50 percent construction/demolition waste must be diverted from landfills;
- Mandatory inspections of energy systems to ensure optimal working efficiency; and
- Low-pollutant emitting exterior and interior finish materials such as paints, carpets, vinyl flooring, and particle boards.

The voluntary standards require the following:

- **Tier I:** 15 percent improvement in energy requirements, stricter water conservation requirements for specific fixtures, 65 percent reduction in construction waste, 10 percent recycled content, 20 percent permeable paving, 20 percent cement reduction, and cool/solar reflective roof.
- **Tier II:** 30 percent improvement in energy requirements, stricter water conservation requirements for specific fixtures, 75 percent reduction in construction waste, 15 percent recycled content, 30 percent permeable paving, 30 percent cement reduction, and cool/solar reflective roof.

CEQA Direction

In 2008, the Schwarzenegger administration, through the Office of Planning and Research (OPR), issued Guidance regarding assessing significance of GHGs in CEQA documents; that Guidance stated that the adoption of appropriate significance thresholds was a matter of discretion for the lead agency. The OPR Guidance states:

"[T]he global nature of climate change warrants investigation of a statewide threshold of significance for GHG emissions. To this end, OPR has asked the CARB technical staff to recommend a method for setting thresholds which will encourage consistency and uniformity in the CEQA analysis of GHG emissions throughout the state. Until such time as state guidance is available on thresholds of significance for GHG emissions, we recommend the following approach to your CEQA analysis."

Determine Significance

- When assessing a project's GHG emissions, lead agencies must describe the existing environmental conditions or setting, without the project, which normally constitutes the baseline physical conditions for determining whether a project's impacts are significant.
- As with any environmental impact, lead agencies must determine what constitutes a significant impact. In the absence of regulatory standards for GHG emissions or other scientific data to clearly define what constitutes a "significant impact," individual lead agencies may undertake a project-by-project analysis, consistent with available guidance and current CEQA practice.
- The potential effects of a project may be individually limited but cumulatively considerable. Lead agencies should not dismiss a proposed project's direct and/or indirect climate change impacts without careful consideration, supported by substantial evidence. Documentation of available information and analysis should be provided for any project that may significantly contribute new GHG emissions, either individually or cumulatively, directly or indirectly (e.g., transportation impacts).
- Although climate change is ultimately a cumulative impact, not every individual project that emits GHGs must necessarily be found to contribute to a significant cumulative impact on the environment. CEQA authorizes reliance on previously approved plans and mitigation programs that have adequately analyzed and mitigated GHG emissions to a less than significant level as a means to avoid or substantially reduce the cumulative impact of a project.

The OPR Guidance did not require Executive Order S-3-05 to be used as a significance threshold under CEQA. Rather, OPR recognized that, until the CARB establishes a statewide standard, selecting an appropriate threshold was within the discretion of the lead agency.

The OPR Guidance did not include a quantitative threshold of significance to use for assessing a project's GHG emissions under CEQA. Moreover, the CARB has not established such a threshold or recommended a method for setting a threshold for project-level analysis. The issue of setting a GHG threshold is complex and dynamic, especially in light of the California Supreme Court decision in Center for Biological Diversity v. California Department of Fish and Wildlife (referred to as the Newhall Ranch decision hereafter). The Supreme Court ruling highlighted the need for the threshold being tailored to the specific project, its location, and the surrounding setting. Therefore, the threshold used to analyze the proposed project is specific to the analysis herein.

In 2010, the California Natural Resources Agency added section 15064.4 to the CEQA Guidelines, providing new legal requirements for how agencies should address GHG-related impacts in their CEQA documents. As amended in early 2019, section 15064.4 provides as follows:

> (a) The determination of the significance of greenhouse gas emissions calls for a careful judgment by the lead agency consistent with the provisions in section 15064. A lead agency shall make a good-faith effort, based to the extent possible on scientific and factual data, to describe, calculate or estimate the amount of greenhouse gas emissions resulting from a project. A lead agency shall have discretion to determine, in the context of a particular project, whether to:
>
> (1) Quantify greenhouse gas emissions resulting from a project; and/or
>
> (2) Rely on a qualitative analysis or performance based standards.
>
> (b) In determining the significance of a project's greenhouse gas emissions, the lead agency should focus its analysis on the reasonably foreseeable incremental contribution of the project's emissions to the effects of climate change. A project's incremental contribution may be cumulatively considerable even if it appears relatively small compared to statewide, national or global emissions. The agency's analysis should consider a timeframe that is appropriate for the project. The agency's analysis also must reasonably reflect evolving scientific knowledge and state regulatory schemes. A lead agency should consider the following factors, among others, when determining the significance of impacts from greenhouse gas emissions on the environment:
>
> (1) The extent to which the project may increase or reduce greenhouse gas emissions as compared to the existing environmental setting;
>
> (2) Whether the project emissions exceed a threshold of significance that the lead agency determines applies to the project.
>
> (3) The extent to which the project complies with regulations or requirements adopted to implement a statewide, regional, or local plan for the reduction or mitigation of greenhouse gas emissions (see, e.g., section 15183.5(b)). Such requirements must be adopted by the relevant public agency through a public review process and must reduce or mitigate the project's incremental contribution of greenhouse gas emissions. If there is substantial evidence that the possible effects of a particular project are still cumulatively considerable notwithstanding compliance with the adopted regulations or requirements, an EIR must be prepared for the project. In determining the significance of impacts, the lead agency may consider a project's consistency with the State's long-term climate goals or strategies, provided that substantial evidence supports the agency's analysis of how those goals or strategies address the project's incremental contribution to climate change and its conclusion that the project's incremental contribution is not cumulatively considerable.

> (c) A lead agency may use a model or methodology to estimate greenhouse gas emissions resulting from a project. The lead agency has discretion to select the model or methodology it considers most appropriate to enable decision makers to intelligently take into account the project's incremental contribution to climate change. The lead agency must support its selection of a model or methodology with substantial evidence. The lead agency should explain the limitations of the particular model or methodology selected for use.

Section 15126.4, subdivision (c), provides guidance on how to formulate mitigation measures addressing GHG-related impacts:

> Consistent with section 15126.4(a), lead agencies shall consider feasible means, supported by substantial evidence and subject to monitoring or reporting, of mitigating the significant effects of greenhouse gas emissions. Measures to mitigate the significant effects of greenhouse gas emissions may include, among others:
>
> (1) Measures in an existing plan or mitigation program for the reduction of emissions that are required as part of the lead agency's decision;
>
> (2) Reductions in emissions resulting from a project through implementation of project features, project design, or other measures, such as those described in Appendix F;
>
> (3) Off-site measures, including offsets that are not otherwise required, to mitigate a project's emissions;
>
> (4) Measures that sequester greenhouse gases;
>
> (5) In the case of the adoption of a plan, such as a general plan, long range development plan, or plans for the reduction of greenhouse gas emissions, mitigation may include the identification of specific measures that may be implemented on a project-by-project basis. Mitigation may also include the incorporation of specific measures or policies found in an adopted ordinance or regulation that reduces the cumulative effect of emissions.

California Supreme Court Decisions

THE "NEWHALL RANCH" CASE

On November 30, 2015, the California Supreme Court released its opinion on *Center for Biological Diversity v. California Department of Fish and Wildlife* (2015) 62 Cal.4th 204 (hereafter referred to as the Newhall Ranch Case).

Because of the importance of the Supreme Court as the top body within the California Judiciary, and because of the relative lack of judicial guidance regarding how GHG issues should be addressed in

CEQA documents, the opinion provides very important legal guidance to agencies charged with preparing EIRs.

The case involved a challenge to an EIR prepared by the California Department of Fish and Wildlife (CDFW) for the Newhall Ranch development project in Los Angeles County, which consists of approximately 20,000 dwelling units as well as commercial and business uses, schools, golf courses, parks and other community facilities in the City of Santa Clarita.

In relation to GHG analysis, the Newhall Ranch Case illustrates the difficulty of complying with statewide GHG reduction targets at the local level using CEQA to determine whether an individual project's GHG emissions will create a significant environmental impact triggering an EIR, mitigation, and/or statement of overriding consideration. The EIR utilized compliance with AB 32's GHG reduction goals as a threshold of significance and modelled its analysis on the CARB's business-as-usual (BAU) emissions projections from the 2008 Scoping Plan. The EIR quantified the project's annual emissions at buildout and projected emissions in 2020 under a BAU scenario, in which no additional regulatory actions were taken to reduce emissions. Since the Scoping Plan determined a reduction of 29 percent from BAU was needed to meet AB 32's 2020 reduction goal, the EIR concluded that the project would have a less-than-significant impact because the project's annual GHG emissions were projected to be 31 percent below its BAU estimate.

The Supreme Court concluded that the threshold of significance used by the EIR was permissible; however, the BAU analysis lacked substantial evidence to demonstrate that the required percentage reduction from BAU is the same for an individual project as for the entire State. The court expressed skepticism that a percentage reduction goal applicable to the State as a whole would apply without change to an individual development project, regardless of its size or location. Therefore, the Supreme Court determined that the EIR's GHG analysis was not sufficient to support the conclusion that GHG impacts would be less than significant.

In addition, the Supreme Court provided the following guidance regarding potential alternative approaches to GHG impact assessment at the project level for lead agencies:

1. The lead agency determination of what level of GHG emission reduction from business-as-usual projection that a new land development at the proposed location would need to achieve to comply with statewide goals upon examination of data behind the Scoping Plan's business-as-usual emission projections. The lead agency must provide substantial evidence and account for the disconnect between the Scoping Plan, which dealt with the State as a whole, and an analysis of an individual project's land use emissions (the same issues with CEQA compliance addressed in this case);

2. The lead agency may use a project's compliance with performance based standards – such as high building energy efficiency – adopted to fulfill a statewide plan to reduce or mitigate GHG emissions to assess consistency with AB 32 to the extent that the project features comply with or exceed the regulation (See Guidelines Section 15064.4(a)(2), (b)(3); see also Guidelines Section 15064(h)(3)). A significance analysis would then need to account for the additional GHG emissions – such as transportation emissions – beyond the regulated

activity. Transportation emissions are in part a function of the location, size, and density or intensity of a project, and thus can be affected by local governments' land use decision making. Additionally, the lead agency may use a programmatic effort including a general plan, long range development plan, or a separate plan to reduce GHG emissions (such as Climate Action Plan or a SB 375 metropolitan regional transportation impact Sustainable Communities Strategy) that accounts for specific geographical GHG emission reductions to streamline or tier project level CEQA analysis pursuant to Guidelines 15183.5(a)-(b) for land use and Public Resources Code Section 21155.2 and 21159.28 and Guidelines Section 15183.5(c) for transportation.

3. The lead agency may rely on existing numerical thresholds of significance for GHG emissions (such as the Bay Area Air Quality Management District's proposed threshold of significance of 1,100 MT CO_2E in annual emission for CEQA GHG emission analysis on new land use projects). The use of a numerical value provides what is "normally" considered significant but does not relieve a lead agency from independently determining the significance of the impact for the individual project (See Guidelines Section 15064.7).

THE SANDAG CASE

In *Cleveland National Forest Foundation v. San Diego Association of Governments* (2017) 3 Cal.5th 497 (*SANDAG)*, the Supreme Court addressed the extent to which, if any, an EIR for a Regional Transportation Plan (RTP) with a Sustainable Communities Strategy (SCS) must address the proposed project's consistency with the 2050 target set forth in Executive Order S-03-05 (i.e., 80 percent below 1990 levels). The Court held that SANDAG did not abuse its discretion by failing to treat the 2050 GHG emissions target as a threshold of significance. The Court cautioned, however, that its decision applies narrowly to the facts of the case and that the analysis in the challenged EIR should not be used as an example for other lead agencies to follow going forward. Notably, the RTP itself covered a planning period that extended all the way to 2050.

The Court acknowledged the parties' agreement that "the Executive Order lacks the force of a legal mandate binding on SANDAG[.]" (*Id*. at p. 513.) This conclusion was consistent with the Court's earlier decision in *Professional Engineers in California Government v. Schwarzenegger* (2010) 50 Cal.4th 989, 1015, which held the Governor had acted in excess of his executive authority in ordering the furloughing of State employees as a money-saving strategy. In that earlier case, which is not mentioned in the *SANDAG* decision, the Court held that the decision to furlough employees was legislative in character, and thus could only be ordered by the Legislature, and not the Governor, who, under the State constitution, may only exercise executive authority. In *SANDAG*, the Court thus impliedly recognized that Governors do not have authority to set statewide legislative policy, particularly for decades into the future. Even so, however, the Court noted, and did not question, the parties' agreement that "the Executive Order's 2050 emissions reduction target is grounded in sound science." (3 Cal.5th at p. 513.) Indeed, the Court emphasized that, although "the Executive Order 'is not an adopted GHG reduction plan' and that 'there is no legal requirement to use it as a threshold of significance,'" the 2050 goal nevertheless "expresses the pace and magnitude of reduction efforts that the scientific community believes necessary to stabilize the climate.

This scientific information has important value to policymakers and citizens in considering the emission impacts of a project like SANDAG's regional transportation plan." (*Id*. at p. 515.) Towards the end of the decision, the Court even referred to "the state's 2050 climate goals" as though the 2050 target from E.O. S-03-05 had some sort of standing under California law. (*Id*. at p. 519.) The Court seemed to reason that, because the Legislature had enacted both AB 32 and SB 32, which followed the downward GHG emissions trajectory recommended in the Executive Order, the Legislature, at some point, was also likely to adopt the 2050 target as well: "SB 32 … reaffirms California's commitment to being on the forefront of the dramatic greenhouse gas emission reductions needed to stabilize the global climate." (*Id*. at p. 519.) Finally, the Court explained that "planning agencies like SANDAG must ensure that CEQA analysis stays in step with evolving scientific knowledge and state regulatory schemes." (*Ibid*.)

In sum, the Court recognized that the Executive Order did not carry the force of law, but nevertheless considered it to be part of "state climate policy" because the Legislature, in enacting both AB 32 and SB 32, seems to be following both the IPCC recommendations for reducing GHG emissions worldwide and evolving science. Nothing in the decision, however, suggests that all projects, regardless of their buildout period, must address the 2050 target or treat it as a significance threshold.

LOCAL

South Coast Air Quality Management District

To provide guidance to local lead agencies on determining significance for GHG emissions in CEQA documents, SCAQMD staff convened an ongoing GHG CEQA Significance Threshold Working Group. Members of the working group include government agencies implementing CEQA and representatives from various stakeholder groups that provide input to SCAQMD staff on developing the significance thresholds. On October 8, 2008, the SCAQMD released the Draft AQMD Staff CEQA GHG Significance Thresholds. These thresholds have not been finalized and continue to be developed through the working group.

The SCAQMD has not announced when staff is expecting to present a finalized version of its GHG thresholds to the governing board. On September 28, 2010, the SCAQMD recommended a numeric "bright-line" threshold of 10,000 metric tons per year of CO_2e for industrial land use projects. This threshold was developed as part of the SCAQMD GHG CEQA Significance Threshold Working Group. This working group was formed to assist SCAQMD's efforts to develop a GHG significance threshold and is composed of a wide variety of stakeholders including the State Office of Planning and Research (OPR), CARB, the Attorney General's Office, a variety of city and county planning departments, various utilities such as sanitation and power companies throughout the SCAB, industry groups, and environmental and professional organizations. The numeric "bright line" was developed to be consistent with CEQA requirements for developing significance thresholds, are supported by substantial evidence, and provides guidance to CEQA practitioners with regard to determining whether GHG emissions from a proposed industrial land use project are significant.

Southern California Association of Governments

On April 7, 2016, the SCAG Regional Council adopted the 2016-2040 Regional Transportation Plan/ Sustainable Communities Strategy (2016 RTP/SCS). The 2016 RTP/SCS charts a course for closely integrating land use and transportation – so that the region can grow smartly and sustainably. It was prepared through a collaborative, continuous, and comprehensive process with input from local governments, county transportation commissions, tribal governments, non-profit organizations, businesses and local stakeholders within the counties of Imperial, Los Angeles, Orange, Riverside, San Bernardino, and Ventura. The 2016 RTP/SCS is a long-range visioning plan that balances future mobility and housing needs with economic, environmental and public health goals. The SCAG region strives toward sustainability through integrated land use and transportation planning. The SCAG region must achieve specific federal air quality standards and is required by State law to lower regional GHG emissions.

City of Irwindale General Plan

RESOURCE MANAGEMENT ELEMENT

- **Policy 11**. The City of Irwindale supports the ethic of conservation of non-renewable resources. This includes efforts to reduce the use of energy (in any form), greenhouse gas (GHG) emissions (consistent with AB 32) and efforts to find new and more energy efficient methods for delivering services. The City supports the development of building standards that enable the community to design energy saving features such as solar energy systems, water efficient landscaping, and sustainable, green, and energy efficient building standards.
- **Policy 19**. The City of Irwindale will consider environmental justice issues as they are related to potential health impact associated with air pollution and ensure that all land use decisions, including enforcement actions, are made in an equitable fashion to protect residents, regardless of age, culture, ethnicity, gender, race, socioeconomic status, or geographic location from the health effects of air pollution.
- **Policy 21**. The City of Irwindale will encourage the applicant for sensitive land uses (e.g., residences, schools, daycare facilities, playgrounds, and medical facilities) to incorporate design features (e.g., pollution prevention, pollution reduction, barriers, landscaping, ventilation systems, or other measures) in the planning process to minimize the potential pollution impacts on sensitive receptors.
- **Policy 22**. The City of Irwindale will facilitate communications among residents, businesses, and the South Coast Air Quality Management District (SCAQMD) to quickly resolve air pollution nuisance complaints. The City will distribute information to advise residents on how to register a complaint with SCAQMD (SCAQMD‘s —Cut Smog program).
- **Policy 28**. The City of Irwindale will require conditions for discretionary approvals that require fugitive dust controls and compliance mechanisms for stationary sources (landfill, composting facilities, aggregate facilities, etc.).
- **Policy 29**. The City of Irwindale will encourage vegetation or chemical stabilization for disturbed land as well as construction screening on fencing for phased construction projects.

- **Policy 30**. The City of Irwindale will provide regional and local air quality information on the City's website, including the SCAQMD's 1-800-CUT-SMOG number for the public to report air pollution complaints to the SCAQMD.

3.4.3 IMPACTS AND MITIGATION MEASURES

THRESHOLDS OF SIGNIFICANCE (GREENHOUSE GASES)

Consistent with Appendix G of the CEQA Guidelines, climate change-related impacts are considered significant if implementation of the proposed Project would do any of the following:

1. Generate greenhouse gas emissions, either directly or indirectly, that may have a significant impact on the environment.

2. Conflict with an applicable plan, policy, or regulation adopted for the purpose of reducing the emissions of greenhouse gases.

SCAQMD Thresholds

On September 28, 2010, the SCAQMD recommended a numeric, bright-line threshold of 10,000 metric tons of CO_2e annually for industrial land uses. This threshold was developed as part of the SCAQMD GHG CEQA Significance Threshold Working Group. The working group was formed to assist the SCAQMD's efforts to develop a GHG significance threshold and is composed of a wide variety of stakeholders including the State OPR, CARB, the Attorney General's Office, a variety of city and county planning departments in the SCAB, various utilities such as sanitation and power companies throughout the basin, industry groups, and environmental and professional organizations. SCAQMD thresholds were developed to be consistent with CEQA requirements for developing significance thresholds, are supported by substantial evidence, and provide guidance to CEQA practitioners and lead agencies with regard to determining whether GHG emissions from a proposed project are significant.

For the purposes of this evaluation, the Proposed Project will first be compared to the SCAQMD numeric bright-line threshold of 10,000 metric tons of CO_2e annually for industrial projects. The Project is also evaluated for compliance with SCAG's 2016–2040 RTP/SCS, which establishes an overall GHG target for the Project region consistent with both the target date of AB 32 (2020) and the post-2020 GHG reduction goals of SB 32.

Methodology

GHG-related impacts were assessed in accordance with methodologies recommended by CARB and the SCAQMD. Where GHG emission quantification was required, emissions were modeled using the CalEEMod, version 2016.3.2. CalEEMod is a statewide land use emissions computer model designed to quantify potential GHG emissions associated with both construction and operations from a variety of land use projects. Project construction-generated GHG emissions were primarily calculated using CalEEMod model defaults for Los Angeles County.

The land use assumptions for the modeling include: Unrefrigerated Warehouse-No Rail – 545,735 square feet; Parking Lot – 11.05 acres; City Park – 2.59 acres. Note that the City Park land use is used as a proxy for the landscaped portions of the Project site.

Mobile-source based criteria pollutant emissions were estimated using the emission factors provided within CalEEMod; an estimate of proposed Project-generated VMT developed as part of this analysis was provided by the traffic consultant, Ganddini Group, as provided in Appendix D of this EIR. Criteria pollutant emissions from consumer products, landscape maintenance activities, and other sources of operational energy usage (e.g. electricity and natural gas) were estimated using the default emission factors provided in CalEEMod.

Based on information provided by the Project applicant, construction activities were to begin in 2021 and end in 2023. These construction activities include site preparation, grading, building construction, paving, and architectural coatings. Detail regarding the construction schedule is provided in Appendix B.

IMPACTS AND MITIGATION MEASURES

Impact 3.4-1: The proposed Project has the potential to generate greenhouse gas emissions, either directly or indirectly, that may have a significant impact on the environment. (Less than Significant with Mitigation)

Emissions of GHGs contributing to global climate change are attributable in large part to human activities associated with the industrial/manufacturing, utility, transportation, residential, and agricultural sectors. Therefore, the cumulative global emissions of GHGs contributing to global climate change can be attributed to every nation, region, and city, and virtually every individual on Earth. A Project's GHG emissions are at a micro-scale relative to global emissions, but could result in a cumulatively considerable incremental contribution to a significant cumulative macro-scale impact. Implementation of the proposed Project would contribute to increases of GHG emissions. Estimated GHG emissions attributable to the Project would be primarily associated with increases of CO_2 and other GHG pollutants, such as methane (CH_4) and nitrous oxide (N_2O), from mobile sources and utility usage.

The proposed Project's short-term construction-related and long-term operational GHG emissions were estimated using the California Emission Estimator Model (CalEEMod)^{TM} (v.2016.3.2). CalEEMod is a statewide model designed to provide a uniform platform for government agencies, land use planners, and environmental professionals to quantify GHG emissions from land use projects. The model quantifies direct GHG emissions from construction and operation (including vehicle use), as well as indirect GHG emissions, such as GHG emissions from energy use, solid waste disposal, vegetation planting and/or removal, and water use. Emissions are expressed in annual metric tons of CO_2 equivalent units of measure (i.e., MT CO_2e), based on the global warming potential of the individual pollutants.

SHORT-TERM CONSTRUCTION GHG EMISSIONS

Construction-related activities that would generate GHG emissions include worker commute trips, haul trucks carrying supplies and materials to and from the Project site, and off-road construction equipment (e.g., dozers, loaders, excavators). Table 3.4-1 illustrates the specific construction-generated GHG emissions that would result from construction of the Project.

TABLE 3.4-1: CONSTRUCTION GHG EMISSIONS (UNMITIGATED AVERAGE MT CO_2E/YEAR)

YEAR	*BIO-CO_2*	*NON-BIO-CO_2*	*TOTAL CO_2*	*CH_4*	*N_2O*	*CO_2E*
2021	0	932.0	932.0	<1	0	934.9
2022	0	1,540.3	1,540.3	<1	0	1,543.5
2023	0	353.2	353.2	<1	0	353.1
Total	**0**	**2,825.5**	**2,825.5**	**<1**	**0**	**2,831.5**
Annual Maximum	**0**	**1,540.3**	**1,540.3**	**<1**	**0**	**1,543.5**

SOURCE: CALEEMOD (V.2016.3.2)

As shown in Table 3.4-1, Project construction would result in the generation of approximately 2,831.5 metric tons of CO_2e over the course of construction. Once construction is complete, the generation of these GHG emissions would cease. The amortized construction emissions are added to the annual average operational emissions.

LONG-TERM OPERATIONAL GHG EMISSIONS

Operation of the Project would result in GHG emissions predominantly associated with motor vehicle use. Long-term operational GHG emissions attributable to the Project are identified in Table 3.4-2 and compared to SCAQMD's interim screening level numeric bright-line threshold of 10,000 metric tons of CO_2e annually. As previously described, operational GHG emissions were based on the Project site plans and the estimated traffic trip generation rates and Project fleet mix provided in the Traffic Impact Analysis (Ganddini Group, 2020).

TABLE 3.4-2: OPERATIONAL GHG EMISSIONS AT BUILDOUT (METRIC TONS/YEAR)

EMISSIONS SOURCE	*TOTAL CO_2*
Construction Emissions (amortized over the 30-year life of the Project)	94.4
Area Source	<0.1
Energy	2,039.1
Mobile	6,747.9
Solid Waste	340.4
Water	578.3
Total Emissions	**9,800.1**

NOTE: TOTALS MAY NOT ADD UP DUE TO ROUNDING.
SOURCE: CALEEMOD (V.2016.3.2)

As shown in Table 3.4-2, operational-generated emissions would not exceed the SCAQMD's numeric bright-line threshold of 10,000 metric tons of CO_2e annually. A large majority of these emissions would be generated by mobile sources, which is an emission source that cannot be regulated by the

City of Irwindale. Additionally, GHGs are global pollutants. They can be carried miles away from the original source and have long atmospheric lifetimes compared to that of local pollutants. GHG Emissions do not directly pose a threat to human health but can have numerous indirect effects. As previously stated, GHG emissions have been directly correlated to climate change. This can lead to events such as droughts, heat waves, increased intensity in storm events, and rising sea levels. These can result in decrease precipitation, increased wildfires, saltwater infiltration of groundwater tables, and decreased crop yields. A reduction of vehicle trips to and from the proposed Project site would reduce the amount of mobile emissions. Methods of reducing vehicle trips include carpooling, transit, cycling, and pedestrian connections. However, the Project is proposing an industrial warehouse and the reduction of vehicle trips is only feasible for the employees working at the facility, though the majority of traffic trips instigated by the Project would be related to haul truck trips transporting freight.

As stated above, the State of California, along with the SCAQMD, has implemented numerous strategies pertaining to trucks and the reduction of emissions that directly apply to the Project. Urban goods delivery is an essential component of the greater freight system and vital to the urban economy. While urban goods delivery represents a small share of urban traffic, it generates a disproportionate amount of GHG emissions. The State of California promulgates policies designed and implemented to improve the efficiency and environmental footprint of the urban freight system, including the introduction of zero and near-zero emission vehicles—a strategy embedded in the Governor's Sustainable Freight Action Plan as well as CARB's AB 32 Scoping Plan, Statewide Implementation Plan, and Mobile Source Strategy.

Additionally, the Project is proposing an industrial warehouse use in close proximity to the I-605, I-10, and I-210, which are major regional freeway corridors. Further, the I-10 corridor has been identified as a "Major International Trade Highway Route" in the California State Goods Movement Action Plan (2007) and therefore serves to accommodate existing truck trips along the interstate. The Goods Movement Action Plan is a Statewide initiative to improve and expand California's goods movement industry and infrastructure in a manner which will increase mobility and relieve traffic congestion as well as reduce GHG emissions. The Plan further identifies I-10 (located approximately 2 miles south of the Project site with connection to the Project site by the I-605) as a "Priority Corridor" for development towards more efficient goods movement and anticipates that the development of good movement-supporting facilities, such as industrial warehouses like that proposed by the Project, will improve the efficiency of overall goods movement throughout the state, and thus reduce truck-related GHG emissions.

Nevertheless, out of an abundance of caution, the proposed Project would be required to implement Mitigation Measure 3.4-1, which include CARB and SCAQMD-recommended measures to reduce GHG emissions through the implementation of solar and energy-conserving systems, landscaping, and use of light colored paving and roofing materials. Therefore, with implementation of CARB and SCAQMD recommendations contained in mitigation measure 3.4-1, Project-related heavy-duty truck travel emissions would be reduced beyond those emissions identified in Table 3.4-2. For these reasons, with implementation of the following mitigation measure, impacts would be ***less than significant*** relative to this topic.

MITIGATION MEASURE(S)

Mitigation Measure 3.4-1: *Prior to the Certificate of Occupancy issuance, the Project Applicant shall demonstrate to the satisfaction of the City of Irwindale Community Development Manager/City Planner and/or their designee that the following measures would be implemented during Project operations. These measures shall be enforced and maintained through Conditions of Approval; Covenants, Codes, and Restrictions (CC&Rs), or other means acceptable to the City of Irwindale Community Development Manager/City Planner and/or their designee.*

- *Maximize use of solar energy, including solar panels.*
- *Install the maximum possible number of solar energy arrays on the building roof and/or on the Project site to generate solar energy for the facility.*
- *Maximize the planting of trees in landscaping and parking lots.*
- *Employ the use of light-colored paving and roofing materials.*
- *Utilize only Energy Star heating, cooling, and lighting devices and appliances.*
- *Employ the use of electric or alternatively-fueled sweeper with high-efficiency particulate air (HEPA) filters.*

Impact 3.4-2: Potential to conflict with an applicable plan, policy, or regulation adopted for the purpose of reducing the emissions of greenhouse gases. (No Impact)

To date, neither the City of Irwindale, nor any regional agency has prepared a qualified GHG reduction plan that is applicable to the proposed Project. However, Irwindale is a member city of the SCAG. SCAG's 2016–2040 RTP/SCS, adopted April 7, 2016, is a long-range visioning plan that balances future mobility and housing needs with economic, environmental, and public health goals. The RTP/SCS embodies a collective vision for the region's future and is developed with input from local governments, county transportation commissions, tribal governments, nonprofit organizations, businesses, and local stakeholders in Imperial, Los Angeles, Orange, Riverside, San Bernardino, and Ventura counties. The RTP/SCS establishes GHG emissions goals for automobiles and light-duty trucks for 2020 and 2035 and establishes an overall GHG target for the region consistent with both the Statewide GHG-reduction targets for 2020 and the post-2020 statewide GHG reduction goals. The 2016 RTP/SCS contains over 4,000 transportation projects, including highway improvements, railroad grade separations, bicycle lanes, new transit hubs, and replacement bridges. These future investments were included in county plans developed by the six-county transportation commissions and seek to reduce traffic bottlenecks, improve the efficiency of the region's network, and expand mobility choices. The RTP/SCS is an important planning document for the region, allowing project sponsors to qualify for federal funding. In addition, the RTP/SCS is supported by a combination of transportation and land use strategies that help the region achieve state GHG emission reduction goals and federal CAA requirements, preserve open space areas, improve public health and roadway safety, support the vital goods movement industry, and use resources more efficiently. The proposed Project's consistency with the RTP/SCS goals is analyzed in detail in Table 3.4-3.

TABLE 3.4-3: CONSISTENCY WITH SCAG'S RTP/SCS GOALS

SCAG GOALS	*COMPLIANCE WITH GOAL*
Goal 1: Align the plan investments and policies with improving regional economic development and competitiveness.	**Not Applicable**: This is not a project-specific policy and is therefore not applicable.
Goal 2: Maximize mobility and accessibility for all people and goods in the region.	**Consistent**: Improvements to the transportation network in Irwindale are developed and maintained to meet the needs of local and regional transportation and to ensure efficient mobility. A number of regional and local plans and programs are used to guide development and maintenance of transportation networks, including but not limited to: • Caltrans Traffic Impact Studies Guidelines • Caltrans Highway Capacity Manual • SCAG RTP/SCS The Project is proposing an industrial warehouse use in close proximity to I-605, I-10, and I-210, which are major regional freeway corridors. Further, the I-10 corridor has been identified as a "Major International Trade Highway Route" in the California State Goods Movement Action Plan and therefore serves to accommodate existing truck trips along the interstate. The Goods Movement Action Plan is a statewide initiative to improve and expand California's goods movement industry and infrastructure in a manner which will increase mobility and relieve traffic congestion as well as reduce GHG emissions. The Plan further identifies I-10 (located approximately 2 miles south of the Project site and with connection to the Project site by I-605) as a "Priority Corridor" for development towards more efficient goods movement and anticipates that the development of good movement-supporting facilities, such as industrial warehouses like that proposed by the Project, will improve the efficiency of overall goods movement throughout the state, and thus reduce truck-related GHG emissions.
Goal 3: Ensure travel safety and reliability for all people and goods in the region.	**Consistent**: All modes of transit in Irwindale are required to follow safety standards established by applicable regulatory agencies. Pedestrian walkways and bicycle routes must follow safety precautions and standards established by local (e.g., City of Irwindale, County of Los Angeles) and regional (e.g., SCAG, Caltrans) agencies. Roadways for motorists must follow safety standards established by the City and Caltrans, as appropriate. The Project is proposing an industrial warehouse use in close proximity to the I-605, I-10, and I-210, which are major regional freeway corridors. Warehouses positioned in close proximity to major freeway corridors are considered goods-movement-supporting facilities, and will improve the efficiency of overall goods movement throughout the state, and thus reduce truck-related GHG emissions.
Goal 4: Preserve and ensure a sustainable regional transportation	**Consistent:** The Project does not propose any modifications to the local roadway system in proximity to the Project site.

SCAG GOALS	*COMPLIANCE WITH GOAL*
system.	All new roadway developments and improvements to the existing transportation network must be assessed with some level of traffic analysis (e.g., traffic assessments, traffic impact studies) to determine how the developments would impact the existing transportation system and to determine the needs for preserving and ensuring a sustainable regional transportation system that provides for safe and efficient movement of goods and people.
Goal 5: Maximize the productivity of our transportation system	**Consistent:** The local and regional transportation system would be improved and maintained to encourage efficiency and productivity. The City of Irwindale's Public Works and Utility Department oversees the improvement and maintenance of all aspects of the public right-of-way on an as-needed basis. The City also strives to maximize productivity of the region's public transportation system (e.g., bus, bicycle) for residents, visitors, and workers coming into and out of Irwindale
Goal 6: Protect the environment and health of our residents by improving air quality and encouraging active transportation (non-motorized transportation, such as bicycling and walking).	**Consistent:** The reduction of energy use, improvement of air quality, and promotion of more environmentally sustainable development are encouraged through the development of alternative transportation methods, green design techniques for buildings, and other energy-reducing techniques. For example, development projects are required to comply with the provisions of the California Building and Energy Efficiency Standards and the Green Building Standards Code (CALGreen). The City also strives to maximize the protection of the environment and improvement of air quality by encouraging and improving the use of the region's public transportation system (e.g., bus, bicycle) for residents, visitors, and workers coming into and out of Irwindale.
Goal 7: Actively encourage and create incentives for energy efficiency, where possible.	**Not Applicable:** This is not a project-specific policy and is therefore not applicable.
Goal 8: Encourage land use and growth patterns that facilitate transit and non-motorized transportation.	**Consistent:** See response to RTP/SCS Goal 6.
Goal 9: Maximize the security of our transportation system through improved system monitoring, rapid recovery planning, and coordination with other security agencies.	**Consistent:** The City of Irwindale monitors existing and newly constructed roadways and transit routes to determine the adequacy and safety of these systems. Other local and regional agencies (e.g., Los Angeles County Transportation Department, Caltrans, SCAG) work with the City to manage these systems. Security situations involving roadways and evacuations would be addressed in the County of Los Angles emergency management protocols (e.g., Los Angeles County Operational Area Emergency Operations Plan) developed in accordance with the State and federal mandated emergency management regulations.

Implementing SCAG's RTP/SCS will greatly reduce the regional GHG emissions from transportation, helping to achieve statewide emission reduction targets. As shown, the proposed Project would not

conflict with the stated goals of the RTP/SCS; therefore, the proposed Project would not interfere with SCAG's ability to achieve the region's year 2020 and post-2020 mobile source GHG reduction targets outlined in the 2016 RTP/SCS, and it can be assumed that regional mobile emissions will decrease in line with the goals of the RTP/SCS. Furthermore, the proposed Project is not regionally significant per CEQA Guidelines Section 15206 and as such, it would not conflict with the SCAG RTP/SCS targets, since those targets were established and are applicable on a regional level.

The proposed Project would not conflict with an adopted plan, policy, or regulation pertaining to GHGs. For these reasons, ***no impact*** would occur relative to this topic.

Impact 3.4-3: Project implementation may result in the inefficient, wasteful, or unnecessary use of energy resources. (Less than Significant)

The CEQA Guidelines requires consideration of the potentially significant energy implications of a project. CEQA requires mitigation measures to reduce "wasteful, inefficient and unnecessary" energy usage (Public Resources Code Section 21100, subdivision [b][3]). According to the CEQA Guidelines, the means to achieve the goal of conserving energy include decreasing overall energy consumption, decreasing reliance on natural gas and oil, and increasing reliance on renewable energy sources. In particular, the proposed Project would be considered "wasteful, inefficient, and unnecessary" if it were to violate State and federal energy standards and/or result in significant adverse impacts related to project energy requirements, energy inefficiencies, energy intensiveness of materials, cause significant impacts on local and regional energy supplies or generate requirements for additional capacity, fail to comply with existing energy standards, otherwise result in significant adverse impacts on energy resources, or conflict or create an inconsistency with applicable plan, policy, or regulation.

The proposed Project is an industrial warehouse. The amount of energy used by the proposed Project during operation would directly correlate with the size and type of building, the energy efficiency of associated building equipment and appliances, and outdoor lighting, and energy use associated with other on-site activities. Other project energy uses include fuel used by vehicle trips generated during Project construction and operation, fuel used by off-road construction vehicles during construction activities, and fuel used by Project maintenance activities during Project operation. The following discussion provides a detailed calculation of energy usage expected for the proposed Project, for the unmitigated and mitigated scenarios, as provided by applicable modelling software (i.e. CalEEMod v2016.3.2 and the CARB EMFAC2017). Additional assumptions and calculations are provided within Appendix B of this EIR.

ELECTRICITY AND NATURAL GAS

Electricity and natural gas used by the proposed Project would be primarily to generate energy for on-site buildings, lighting, and water pumping, treatment, and conveyance. As shown in the following tables, "Energy" is one of the categories that was modeled for GHG emissions. The total unmitigated and mitigated GHG emissions generated from the "Energy" category is 759.9 MT CO_2e. The following discussion includes a more detailed breakdown of energy consumption in terms of natural gas and electricity consumption. The proposed Project would implement ways to provide

alternative energy use throughout the Project site, as described by Mitigation Measure 3.4-1 and by Mitigation Measure 3.2-1 as provided in *Section 3.2: Air Quality* of this EIR.

Natural Gas: Unmitigated natural gas energy consumption by land use is presented in Table 3.4-4. This table also includes the GHG emissions that are generated by the natural gas use. See Appendix B of this EIR for further detail.

TABLE 3.4-4: NATURAL GAS USE AND GHG EMISSIONS

	NATURAL GAS USE	*TOTAL CO_2*	*CH_4*	*N_2O*	*CO_2E*
	kBTU/year	MT/year			
Project Total	**9,877,890**	**527.1**	**<0.1**	**<0.1**	**530.3**

SOURCES: CALEEMOD (V.2016.3.2)

Electricity: Unmitigated electricity energy consumption by land use is presented in Table 3.4-5. This table also includes the GHG emissions that are generated by the electricity use. See Appendix B of this EIR for further detail).

TABLE 3.4-5: ELECTRICITY USE AND GHG EMISSIONS

	ELECTRICITY GAS USE	*TOTAL CO_2*	*CH_4*	*N_2O*	*CO_2E*
	kWh/year	MT/year			
Project Total	**6,226,178**	**1,501.7**	**<0.1**	**<0.1**	**1,508.8**

SOURCES: CALEEMOD (V.2016.3.2)

These tables are representative of energy usage for the Project's buildout year. According to CalEEMod's *Appendix A: Calculation Details for CalEEMod*, CalEEMod uses the California Commercial End Use Survey (CEUS) database to develop energy intensity value for non-residential buildings.

ON-ROAD VEHICLES (OPERATION)

The proposed Project would generate vehicle trips during its operational phase. A description of Project operational on-road mobile energy usage is provided below.

As provided by CalEEMod, upon operation of the proposed Project, the Project is anticipated to generate approximately 31,768 VMT per day. In order to calculate operational on-road vehicle energy usage and emissions, De Novo Planning Group used fleet mix data from the CalEEMod (v2016.3.2) output for the proposed Project, Year 2023 gasoline and diesel MPG (miles per gallon) factors for individual vehicle classes as provided by EMFAC2017, weighted average MPG factors for gasoline and diesel were derived. Therefore, upon full buildout, the proposed Project would generate operational vehicle trips that would use a total of approximately 803 gallons of gasoline

and 1,124 gallons of diesel per day, or 293,069 gallons of gasoline and 410,284 gallons of diesel per year.

ON-ROAD VEHICLES (CONSTRUCTION)

The proposed Project would also generate on-road vehicle trips during Project construction (from construction workers and vendors travelling to and from the site). The vehicle fuel consumed during these trips was estimated based on the assumed construction schedule, vehicle trip lengths, and number of workers per construction phase as provided by CalEEMod, and Year 2023 gasoline and diesel MPG factors provided by EMFAC2017 (year 2023 factors were used to represent the buildout year). For the sake of simplicity, it was assumed that all construction worker light duty passenger cars and truck trips use gasoline as a fuel source, and all medium and heavy-duty vendor trucks use diesel fuel. Table 3.4-6, below, describes the gasoline and diesel fuel consumed during each construction phase (in aggregate). As shown, the vast majority of on-road mobile vehicle fuel used during the construction of the proposed Project would occur during the building construction phase. There is no feasible mitigation available that would reduce on-road mobile vehicle GHG emissions generated by the Project construction activities (requiring the use of electric construction vehicles was deemed infeasible, given price and availability concerns). See Appendix B of this EIR for a detailed accounting of construction on-road vehicle fuel usage estimates.

TABLE 3.4-6: ON-ROAD MOBILE FUEL GENERATED BY PROJECT CONSTRUCTION ACTIVITIES – BY PHASE

CONSTRUCTION PHASE	*# OF DAYS*	*TOTAL DAILY WORKER TRIPS[A]*	*TOTAL DAILY VENDOR TRIPS[A]*	*TOTAL HAULER WORKER TRIPS[A]*	*TOTAL GALLONS OF GASOLINE FUEL[B]*	*TOTAL GALLONS OF DIESEL FUEL[B]*
Site Preparation	20	18	0	0	185	0
Grading	45	20	0	0	463	0
Building Construction	440	479	187	0	5,425	4,691
Paving	35	15	0	0	270	0
Architectural Coating	170	96	0	0	420	0
Total	**N/A**	**N/A**	**N/A**	**N/A**	**6,763**	**4,691**

NOTE: [A] PROVIDED BY CALEEMOD OUTPUT. [B]SEE APPENDIX B OF THIS EIR FOR FURTHER DETAIL

SOURCE: CALEEMOD (V.2016.3.2); EMFAC2017.

OFF-ROAD VEHICLES (CONSTRUCTION)

Off-road construction vehicles would use diesel fuel during the construction phase of the proposed Project. A non-exhaustive list of off-road constructive vehicles expected to be used during the construction phase of the proposed Project includes: forklifts, generator sets, tractors, excavators, and dozers. Based on the total amount of CO_2 emissions expected to be generated by the proposed Project (as provided by the CalEEMod output), and standard conversion factors (as provided by the U.S. Energy Information Administration), the proposed Project would use a total of approximately 15,497 gallons of diesel fuel for off-road construction vehicles. Detailed calculations are provided in Appendix B of this EIR.

CONCLUSION

The proposed Project would use energy resources for the operation of the Project's proposed industrial use (electricity and natural gas), for on-road vehicle trips (e.g. gasoline and diesel fuel) generated by the proposed Project, and from off-road construction activities associated with the proposed Project (e.g. diesel fuel). Each of these activities would require the use of energy resources. The proposed Project would be responsible for conserving energy, to the extent feasible, and relies heavily on reducing per capita energy consumption to achieve this goal, including through statewide and local measures.

The proposed Project would be in compliance with all applicable federal, State, and local regulations regulating energy usage. For example, Southern California Edison (SCE), the electric and natural gas provider to the proposed Project, is responsible for the mix of energy resources used to provide electricity for its customers, and it is in the process of implementing the statewide RPS to increase the proportion of renewable energy (e.g. solar and wind) within its energy portfolio. SCE is expected to achieve at least a 33% mix of renewable energy resources by 2020, and 60% by 2030. Additionally, energy-saving regulations, including the latest State Title 24 building energy efficiency standards ("part 6"), would be applicable to the proposed project. These regulations would require the proposed project buildings to achieve a high level of energy efficiency. For example, part 6 of the latest Title 24 building energy efficiency standards would require improvements for attics, walls, water heating, and lighting, as compared with the previous version of these standards. Other statewide measures, including those intended to improve the energy efficiency of the statewide passenger and heavy-duty truck vehicle fleet (e.g. the Pavley Bill and the Low Carbon Fuel Standard), would improve vehicle fuel economies, thereby conserving gasoline and diesel fuel. These energy savings would continue to accrue over time.

Furthermore, as described previously, the implementation of Mitigation Measure 3.4-1, as well as Mitigation Measures 3.2-1 and 3.2-2 (as provided by Section 3.2: Air Quality) would further reduce Project energy usage (including from electricity, natural gas, and on-road vehicle gasoline and diesel sources). Overall, the incorporation of mitigation measures would ensure that the proposed Project would avoid and reduce inefficient, wasteful, and unnecessary consumption of energy. The proposed Project would comply with all existing energy standards, including those established by the City of Irwindale, the local air district (SCAQMD), and the State of California, and would not be expected to result in significant adverse impacts on energy resources. For these reasons, the proposed Project would not cause an inefficient, wasteful, or unnecessary use of energy resources nor cause a significant impact on any of the threshold as described by the *CEQA Guidelines*. This is a ***less than significant*** impact.

The purpose of this section is to disclose and analyze the potential impacts associated with hazards and hazardous materials related to the Project site and general vicinity, and to analyze the potential for exposure of people to hazards and hazardous materials as the Project is built and operated in the future. This section is based in part on the: City of Irwindale General Plan Update (City of Irwindale as amended through June 2008) and Draft Environmental Impact Report (State Clearinghouse No. 2005071047) – City of Irwindale General Plan (City of Irwindale 2006).

No comments were received during the public review period or scoping meeting for the Notice of Preparation regarding this topic. Full comments received are included in Appendix A.

3.5.1 ENVIRONMENTAL SETTING

PHYSICAL SETTING

Project Location

The 5175 Vincent Avenue Project site (Project site) is located north of a Los Angeles County-owned pit, east of Allen Drive, south of Arrow Highway, and west of Vincent Avenue in Irwindale, California. The Project site is immediately adjacent to unincorporated Los Angeles County to the south and east. Figures 2.0-1 and 2.0-2 found in Chapter 2.0, Project Description, illustrate the regional location and Project vicinity.

Existing Site Uses

The Project site is the general location of the former Irwindale Pit No. 1 (Manning Brothers Pit) Project. Mining of the Manning Pit began in the 1930s and was completed in the 1970s. The City of Irwindale acquired the northern portion of the pit (approximately 37 acres) in the late 1980s from the County of Los Angeles, and the County retained the remainder (approximately 45 acres) which is currently used as a supplemental water recharge basin in conjunction with the Irwindale Recharge Basin, located just to the west.

After its acquisition, the City began backfilling the site with a variety of construction debris. However, backfilling was stopped in 1992 when it was discovered that improper filling methods had been used by the contractor. In 2008, the City approved new remediation plans and an Initial Study/Mitigated Negative Declaration (which was subsequently amended in 2009) to excavate the improperly filled site and backfill the site again according to all local, regional, state and federal standards. It was estimated that approximately five million cubic yards of additional backfill material would be needed to fill the pit to near street level. All of these incoming materials would need to be screened to make sure they were not contaminated and met backfill requirements. It was estimated that backfilling and grading of the pit would take approximately six to seven years to complete assuming an annual rate of approximately 840,000 cubic yards of backfill materials. The backfilling

and grading of the pit was completed in January 2019. According to the January 23, 2019 report to the Irwindale City Council, the site was filled entirely with clean soil to street-level[1].

Existing Surrounding Uses

The Los Angeles County-owned pit is located south of the Project site, which is currently being utilized as a supplemental water recharge basin. Single-family residential homes exist directly east of the site across Vincent Avenue and approximately 450 feet to the west of the site across Allen Drive. Industrial and business park uses exist to the north of the Project site. Other nearby uses include the Irwindale Plaza, consisting of various restaurants and commercial/retail uses, approximately 0.25 miles northwest of the Project site and City Hall, the City of Irwindale Police Department, and the Irwindale Park approximately 1,000 feet to the west of the Project site.

Site Topography

The Project site is relatively flat and ranges in elevation from approximately 400 to 460 feet above sea level as shown in Figure 2.0-4 in Section 2.0, Project Description.

HAZARDS ASSESSMENT

For the purposes of this EIR, "hazardous material" is defined as provided in California Health & Safety Code, Section 25501:

- Any material that, because of its quantity, concentration, or physical or chemical characteristics, poses a significant present or potential hazard to human health and safety or to the environment if released into the workplace or the environment.

"Hazardous materials" include, but are not limited to, hazardous substances, hazardous waste, and any material that a handler or the administering agency has a reasonable basis for believing that it would be injurious to the health and safety of persons or harmful to the environment if released into the workplace or the environment.

"Hazardous waste" is a subset of hazardous materials. For the purposes of this EIR, the definition of hazardous waste is essentially the same as that in the California Health & Safety Code, Section 25517, and in the California Code of Regulations (CCR), Title 22, Section 66261.2:

- Hazardous wastes are wastes that, because of their quantity, concentration, physical, chemical, or infectious characteristics, may either cause, or significantly contribute to, an increase in mortality or an increase in serious illness, or pose a substantial present or potential hazard to human health or the environment when improperly treated, stored, transported, disposed of, or otherwise managed.

[1] City of Irwindale City Council Hearing. (2019). 'Item No. 2B: Acceptance of Manning Pit Remediation and Grading Project'. In *City Council Minutes January 23, 2019.* City of Irwindale: Council Chambers.

CCR Title 22 categorizes hazardous waste into hazard classes according to specific characteristics of ignitibility, corrosivity, reactivity, or toxicity. Hazardous waste with any of these characteristics is also known as a Resource Conservation and Recovery Act (RCRA) waste.

Hazardous materials can be categorized as hazardous non-radioactive chemical materials, radioactive materials, toxic materials, and biohazardous materials. The previous definitions are adequate for non-radioactive hazardous chemicals. Radioactive and biohazardous materials are further defined as follows:

- Radioactive materials contain atoms with unstable nuclei that spontaneously emit ionizing radiation to increase their stability.
- Radioactive wastes are radioactive materials that are discarded (including wastes in storage) or abandoned.
- Toxic wastes are harmful or fatal when ingested or absorbed (e.g., containing mercury, lead). When toxic wastes are land disposed, contaminated liquid may leach from the waste and pollute groundwater.
- Biohazardous materials include materials containing certain infectious agents (microorganisms, bacteria, molds, parasites, and viruses) that cause or significantly contribute to increased human mortality or organisms capable of being communicated by invading and multiplying in body tissues.
- Medical wastes include both biohazardous wastes (byproducts of biohazardous materials) and sharps (devices capable of cutting or piercing, such as hypodermic needles, razor blades, and broken glass) resulting from the diagnosis, treatment, or immunization of human beings, or research pertaining to these activities.

There are countless categories of hazardous materials and hazardous wastes that could be found on any given property based on past uses. Some common examples include agrichemicals (chlorinated herbicides, organophosphate pesticides, and organochlorine pesticides, such as such as Mecoprop (MCPP), Dinoseb, chlordane, dichloro-diphenyltrichloroethane (DDT), and dichloro-diphenyl-dichloroethylene (DDE)), petroleum based products (oil, gasoline, diesel fuel), a variety of chemicals including paints, cleaners, and solvents, and asbestos-containing or lead-containing materials (e.g., paint, sealants, pipe solder).

Adjoining Properties

The Project site is bounded on the north by industrial warehouses, on the west by undeveloped, recently filled, land apart of the former aggregate mine pit (Manning Pit), on the east by Vincent Avenue, and on the south by supplemental recharge basins. Single family residences are located to the east across Vincent Avenue and approximately 450 feet to the west across Allen Drive.

Site Reconnaissance

On April 23, 2019, the Los Angeles Regional Water Quality Control Board (LARWQCB) staff conducted a site reconnaissance (State of California Regional Water Quality Control Board Los Angeles Region Order No. R4-2019-0107). LARWQCB staff observed that the pit had been filled to street level and

that the property was ready for redevelopment. De Novo Planning Group performed a site reconnaissance in February 2020 to confirm the site conditions.

Historical Use Information

Historical information was reviewed to develop a history of the previous uses on the Project site and surrounding area, in order to evaluate the Project site and adjoining properties for evidence of any environmental concerns. Standard historical sources reviewed included the following, as available: Aerial Photographs, Remediation Reports, Environmental Records, and Databases.

AERIAL PHOTOGRAPHS

Aerial photographs of the Project site and general vicinity were reviewed. Mining of the Manning Pit began in the 1930s and was completed in the 1970s. In the late 1980s, the City of Irwindale acquired the northern portion of the pit (approximately 37 acres) from the County of Los Angeles and appears to have been backfilling the site with a variety of construction debris until 1992. The County retained the remaining southern portion of the pit (approximately 45 acres), which has been used as a supplemental water recharge basin since the mid-1990s. From 1992 to 2008, the Project site appears to have been left undeveloped and vacant. From 2008 to present day, remediation efforts appear to have started.

REMEDIATION OVERVIEW

As previously noted, the backfilling and grading of the Manning Pit was completed in January 2019. On January 23, 2019, the City Manager presented the results of the remediation activities to the City Council and recommended the City Council approve and accept the remediation project and authorize staff to prepare and submit a pit closure report to the LARWQCB. According to the report to City Council, good results were achieved from site compaction tests. Additionally, the site was filled entirely with clean soil and determined to be clean to state and federal standards for housing development. The City Council unanimously approved the remediation project.[2]

On April 11, 2019, a report titled *Fill Completion Report, North Portion of Manning Pit*, dated January 7, 2019, was submitted to the LARWQCB to inform the Board that the objective of filling the pit to surrounding grade had been completed, and request termination of waste discharge requirements (WDRs). During an inspection of the site on April 23, 2019, LARWQCB staff observed the former mining pit had been filled to street level and that the property was ready for redevelopment. On September 12, 2019, the LARWQCB adopted Order No. R4-2002-0103 to terminate the WDRs finding that the requirements were no longer necessary because discharge of wastes at the site had ceased.

[2] City of Irwindale City Council Hearing. (2019). 'Item No. 2B: Acceptance of Manning Pit Remediation and Grading Project'. In *City Council Minutes January 23, 2019.* City of Irwindale: Council Chambers.

ENVIRONMENTAL RECORDS

A search of local, state, and federal agency databases for the Project site and known contaminated sites in the vicinity was performed. None of the parcels in the Project site were found to contain any known contamination.

The U.S. Environmental Protection Agency (EPA) Toxic Release Inventory (TRI) tracks the management of certain toxic chemicals that may pose a threat to human health and the environment. Certain industrial facilities in the U.S. must report annually how much of each chemical is recycled, combusted for energy recovery, treated for destruction, and disposed of or otherwise released on- and off-site. The EPA TRI does not list data on disposal or other releases of toxic chemicals in the Project site (USEPA, 2019). There are four TRI sites in the City of Irwindale. The nearest TRI site is the Miller Brewing Company located at 15801 E. 1st Street, approximately 1.2 miles northwest of the Project site. See Table 3.5-1 for a complete list of sites identified by the EPA TRI database the City of Irwindale.

TABLE 3.5-1: EPA TRI FACILITIES WITHIN THE CITY OF IRWINDALE

SITE NAME	*CHEMICALS RELEASED*	*TRI CHEMICAL ID*	*ADDRESS*
Miller Brewing Company	Ammonia	007664417	15801 E. 1st St., Irwindale
Irwindale Plant 3	Lead Compounds	N420	13631 Live Oak Ave., Irwindale
National Ready Mixed Concrete Company	-	-	2620 Buena Vista St., Irwindale
Calportland Company Live Oak Plant	Lead Compounds	N420	590 E Live Oak Ave., Irwindale

SOURCE: EPA, TRI EXPLORER 2018 FACT SHEET, RELEASED NOVEMBER 2019.

The California Department of Toxic Substances Control (DTSC) maintains the *Envirostor Data Management System*, which provides information on hazardous waste facilities (both permitted and corrective action) as well as any available site cleanup information. There are no sites listed in the Envirostor database within the Project site. The nearest site listed on the Envirostor database is located at 1211 W. Gladstone Street in Azusa, CA, approximately 0.6 miles north of the Project site. This Azusa Land Reclamation site was a rock and gravel quarry that slowly started accepting different types of wastes. In 1984, an inspection was done in response of reports that the site had accepted disposal of hazardous waste. The investigation concluded that some illegal dumping occurred and was already excavated and the other alleged reports were unconfirmed. Thus, the DTSC determined a "No Further Action" cleanup status on March 9, 1995.

GeoTracker is the State Water Resources Control Board's (SWRCB's) Internet-accessible database system used by the SWRCB, regional boards, and local agencies to track and archive compliance data from authorized or unauthorized discharges of waste to land, or unauthorized releases of hazardous substances from underground storage tanks (USTs). See Table 3.5-2 for a complete list of sites identified by the GeoTracker database within 0.5 miles of the Project site.

TABLE 3.5-2: GEOTRACKER HAZARDOUS MATERIAL RELEASE SITES WITHIN 0.5 MILES OF PROJECT SITE

SITE NAME	*TYPE*	*CLEANUP STATUS*	*ADDRESS*
Granger's Air Conditioning	LUST Cleanup Site	Completed – Case Closed	16336 Arrow Highway E Irwindale
City of Irwindale Service Yard	LUST Cleanup Site	Completed – Case Closed	16034 Calle del Norte Irwindale
FMR Fairchild Industries / FMR Pacific Precision Metals	Cleanup Program Site	Completed – Case Closed	601 S. Vincent Avenue Azusa
Textone Inc (AKA Woonteck)	LUST Cleanup Site	Completed – Case Closed	1048 Kirkwall Road W Azusa
Elhodor Inc/Wood Tech	LUST Cleanup Site	Completed – Case Closed	1136 Kirkwall Road W Azusa
McKeand Mechanical	LUST Cleanup Site	Completed – Case Closed	1045 Kirkwall Road W Azusa
McKeand Mechanical	LUST Cleanup Site	Completed – Case Closed	1111 Kirkwall Road Azusa
Cardlock Fuels, CFS8	LUST Cleanup Site	Completed – Case Closed	575 S Vincent Avenue Azusa

NOTE: LUST = LEAKING UNDERGROUND STORAGE TANK.
SOURCE: SWRCB, GEOTRACKER, 2020.

The Solid Waste Information System (SWIS) is a database of solid waste facilities that is maintained by the California Integrated Waste Management Board (CIWMB). The SWIS data identifies active, planned and closed sites. According to the SWIS Facility database, the Manning Brothers Class III Landfill was previously located on the Project site; however, the landfill is closed and has not been active since December 31, 1992. The nearest active facility, Azusa Transfer and MRF, is located approximately 0.6 miles north of the Project site.

DATABASES

There is a broad list of federal and state databases that provide information for sites with varying potential for risk from the possible existence of hazardous materials. There are numerous redundancies among these various database listings. Below is a brief summary of each.

National Priorities List: The National Priorities List (NPL) of Superfund Sites and Proposed NPL Sites is EPA's database of more than 1,200 sites designated or proposed for priority cleanup under the Superfund program. NPL sites may encompass relatively large areas. The Project site is not listed in this database.

RCRIS System: The Resource Conservation and Recovery Information System (RCRIS) is an EPA database that includes selective information on sites that generate, transport, store, treat, and/or dispose of hazardous waste as defined by RCRA. Identification on this list does not indicate that there has been an impact on the environment. The Project site is not listed in this database.

CERCLIS Data: Comprehensive Environmental Response, Compensation, and Liability Information System (CERCLIS) is an EPA database that contains information on potential hazardous waste sites that have been reported to the EPA by states, municipalities, private companies, and individuals, pursuant to Section 103 of the Comprehensive Environmental Response, Compensation, and Liability Act (CERCLA). CERCLIS contains sites that are either proposed for or on the NPL, as well as

sites that are in the screening and assessment phase for possible inclusion on the NPL. The Project site is not listed in this database.

CORRACTS: Corrective Action Report (CORRACTS) is an EPA database that identifies hazardous waste handlers with RCRA corrective action activity. The Project site is not listed in this database.

Cortese Database: The Cortese database identifies public drinking water wells with detectable levels of contamination, hazardous substance sites selected for remedial action, sites with known toxic material identified through the abandoned site assessment program, sites with USTs having a reportable release, and all solid waste disposal facilities from which there is known hazardous substance migration. The source of this database is the California Environmental Protection Agency (Cal-EPA) and are found in the GeoTracker database. The Project site is not listed in this database.

GeoTracker has replaced past databases, such as the Leaking Underground Storage Tank Information System (LUSTIS) and the Underground Storage Tank (UST) database. Permitted USTs are not located in the Project site. The nearest permitted UST is at an Arco station, located approximately 0.36 miles northwest of the Project site.

None of the records reviewed for the Project site indicate there are any environmental concerns associated with the Project site.

Hazardous Material Sites

As noted above, the State of California Hazardous Waste and Substances Site List (also known as the "Cortese List") is a planning document used by the state, local agencies, and developers to comply with the California Environmental Quality Act (CEQA) requirements for providing information about the location of hazardous materials sites. Government Code Section 65962.5 requires the Cal EPA to annually update the Cortese List. The DTSC is responsible for preparing a portion of the information that comprises the Cortese List. Other state and local government agencies are required to provide additional hazardous material release information that is part of the complete list.

GeoTracker is a geographic information system (GIS) that provides online access to environmental data and is the interface to the Geographic Environmental Information Management System (GEIMS), a data warehouse which tracks regulatory data about underground fuel tanks, fuel pipelines, and public drinking water supplies. Searches of the above resources and records identified eight hazardous material sites within 0.5 mile of the Project site known to handle and store hazardous materials that are associated with a hazardous material related release or occurrence. The terms "release" or "occurrence" include any means by which a substance could harm the environment: by spilling, leaking, discharging, dumping, injecting, or escaping.

Table 3.5-2 identifies the hazardous material sites and associated hazard within 0.5 mile of the Project site. Additionally, Table 3.5-3 displays the known hazardous material sites and associated hazards within 1.0 mile of the Project site. As noted previously, none of the parcels in the Project site were found to contain any known contamination. The nearest open cases to the Project site are the IOPTEX, Inc. cleanup program site and the Valley Clutch Co. Inc. and American Capacitor Corp cleanup program sites located approximately 0.5 mile west and 0.6 mile northwest of the Project

site, respectively. The Project site and the surrounding areas do not contain identified oil and gas monitoring wells.

TABLE 3.5-3: GEOTRACKER HAZARDOUS MATERIAL RELEASE SITES WITHIN 1.0 MILE OF PROJECT SITE

SITE NAME	*TYPE*	*CLEANUP STATUS*	*ADDRESS*
Granger's Air Conditioning (T0603705503)	LUST Cleanup Site	Completed – Case Closed	16336 Arrow Highway E Irwindale
City of Irwindale Service Yard (T10000000509)	LUST Cleanup Site	Completed – Case Closed	16034 Calle del Norte Irwindale
FMR Fairchild Industries/FMR Pacific Precision Metals (SL603798907)	Cleanup Program Site	Completed – Case Closed	601 S. Vincent Avenue Azusa
Textone Inc (AKA Woonteck) (T0603703354)	LUST Cleanup Site	Completed – Case Closed	1048 Kirkwall Road W Azusa
Elhodor Inc/Wood Tech (T0603703356)	LUST Cleanup Site	Completed – Case Closed	1136 Kirkwall Road W Azusa
McKeand Mechanical (T0603704121)	LUST Cleanup Site	Completed – Case Closed	1045 Kirkwall Road W Azusa
McKeand Mechanical (T0603704163)	LUST Cleanup Site	Completed – Case Closed	1111 Kirkwall Road Azusa
Cardlock Fuels, CFS8 (T10000000195)	LUST Cleanup Site	Completed – Case Closed	575 S Vincent Avenue Azusa
Irwindale Redevelopment (T0603703009)	LUST Cleanup Site	Completed – Case Closed	4900 Irwindale Avenue Irwindale
Rodriguez Trucking (T10000000418)	LUST Cleanup Site	Completed – Case Closed	4938 Azusa Canyon Road Irwindale
General Telephone Company (T0603704631)	LUST Cleanup Site	Completed – Case Closed	5010 Azusa Canyon Road N Irwindale
Shannon Casket Co (T0603704656)	LUST Cleanup Site	Completed – Case Closed	15744 Arrow Highway E Irwindale
IOPTEX Inc. (SL603798877)	Cleanup Program Site	Open – Inactive	15715 Arrow Highway Irwindale
Specialty Organics, Inc. (T0603703325)	LUST Cleanup Site	Completed – Case Closed	5263 4th Street N Irwindale
Valley Clutch Co. Inc. (SL603798885)	Cleanup Program Site	Open – Inactive	5396 Third Street Irwindale
American Capacitor Corp. (SL603798884)	Cleanup Program Site	Open – Inactive	5367 Third Street Irwindale
Jason Wood Products (SL603798879)	Cleanup Program Site	Open – Inactive	15519 Arrow Highway Irwindale
Davis Walker Corporation (T0603700169)	LUST Cleanup Site	Completed – Case Closed	5555 Irwindale Avenue Irwindale
Liquid Carbonic (T0603704614)	LUST Cleanup Site	Completed – Case Closed	16125 Ornelas Street Irwindale
Transit Mixed Concrete Co. (T0603703362)	LUST Cleanup Site	Completed – Case Closed	1201 Gladstone Street Azusa
The Norac Co. (SL603798883)	Cleanup Program Site	Open – Inactive	405 S. Motor Avenue Azusa
Reichhold Chemicals, Inc. (SL603798901)	Cleanup Program Site	Open – Site Assessment	237 S. Motor Avenue Azusa
James Restino (T0603705330)	LUST Cleanup Site	Completed – Case Closed	245 Irwindale Avenue Azusa
Hectors Auto Repair (T0603703368)	LUST Cleanup Site	Completed – Case Closed	301 Irwindale Avenue Azusa
Anglemyer Parts & Service Inc. (SL603798897)	Cleanup Program Site	Completed – Case Closed	320 S. Irwindale Avenue Azusa

SITE NAME	*TYPE*	*CLEANUP STATUS*	*ADDRESS*
CEMEX (T0603760148)	LUST Cleanup Site	Completed – Case Closed	1201 Gladstone Street Azusa
Azusa Light & Power (T0603772260)	LUST Cleanup Site	Completed – Case Closed	710 Gladstone Street Azusa
A-Z Service Station (T0603705553)	LUST Cleanup Site	Completed – Case Closed	16940 Gladstone Street Azusa
Challenge Transport, Inc. (SL603798893)	Cleanup Program Site	Open – Inactive	1190 W. Gladstone Street Azusa
Azusa Land Reclamation Co. (SL603798874)	Cleanup Program Site	Open – Inactive	1168 W. Gladstone Street Azusa
Products Eng. Corp. (SL603798906)	Cleanup Program Site	Completed – Case Closed	503 S. Vincent Avenue Azusa
Azusa Fuel (Former) (T0603794723)	LUST Clean Up Site	Completed – Case Closed	16677 Arrow Highway Azusa

NOTE: LUST = LEAKING UNDERGROUND STORAGE TANK.
SOURCE: SWRCB, GEOTRACKER, 2020.

Transportation of Hazardous Materials

The transportation of hazardous materials within the City of Irwindale Planning Area is subject to various federal, state, and local regulations. The following provisions are included in the California Vehicle Code (CVC) and pertain to the transportation of hazardous related materials.

- The Highway Patrol designates the routes in California which are to be used for the transportation of explosives. (Section 31616)
- The CVC applies when the explosives are transported as a delivery service for hire or in quantities in excess of 1,000 pounds. The transportation of explosives in quantities of 1,000 pounds or less, or other than on a public highway, is subject to the California Health and Safety Code. (Section 31601(a))
- It is illegal to transport explosives or inhalation hazards on any public highway not designated for that purpose, unless the use of the highway is required to permit delivery of, or the loading of, such materials. (Section 31602(b) and Section 32104(a))
- When transporting explosives through or into a city for which a route has not been designated by the Highway Patrol, drivers must follow routes as may be prescribed or established by local authorities. (Section 31614(a))
- Inhalation hazards and poison gases are subject to additional safeguards. These materials are highly toxic, spread rapidly, and require rapid and widespread evacuation if there is loss of containment or a fire. The Highway Patrol designates through routes to be used for the transportation of inhalation hazards. It may also designate separate through routes for the transportation of inhalation hazards composed of any chemical rocket propellant. (Section 32100 and Section 32102(b))

In addition to area roadways, hazardous materials are routinely transported on Union Pacific Railroad (UPRR) lines that are roughly 0.25-mile northwest of the Project boundary. Although hazardous materials are transported on these lines, the risk of accidents, and more specifically accidents involving hazardous materials, is relatively low. The U.S. Department of Transportation Federal Railroad Administration found the UPRR company train accident rate to be 4.18 train accidents per one million train miles traveled, resulting in a less than 0.001% chance of an accident.

Risk of a railroad accident containing hazardous materials is much lower, as only an average of eight accidents involving hazardous material spills occur annually in California.

The UPRR Company does implement a security plan in compliance with the Department of Transportation Final Rule 49 CFR Part 172 Hazardous Materials (HM 232): Security Requirements for Offerors and Transporters of Hazardous Materials. The plan includes requirements to enhance the security of transported hazardous materials and ensures proper cleanup procedures in the instance of an accidental release.

FIRE HAZARDS

Wildfires are a major hazard in the State of California. Wildfires burn natural vegetation on developed and undeveloped lands and include timber, brush, woodland, and grass fires. While low intensity wildfires have a role in the County's ecosystem, wildfires put human health and safety, structures (e.g., homes, schools, businesses, etc.), air quality, recreation areas, water quality, wildlife habitat and ecosystem health, and forest resources at risk. Wildland fire hazards exist in varying degrees in the foothill portion of the County located to the east and southwest of the Project site. The California Department of Forestry has designated the northern edge of the City as a Local Responsibility Area (LRA), which is within the very high fire hazard severity zone; however, this rating does not extend to the Project site. Additionally, the Project site is not located within a State Responsibility Area (SRA). The Project site is located in an area that is predominately urban and industrial, which is not considered at a significant risk of wildfire.

3.5.2 REGULATORY SETTING

FEDERAL

The primary federal agencies that are responsible for overseeing regulations and policies regarding hazardous materials are the EPA, Department of Labor Occupational Safety and Health Administration (OSHA), and the Department of Transportation (DOT). Several laws governing the transport, storage, and use of hazardous materials are governed by these agencies as well as oversight for contaminated sites cleanup. Federal laws and regulations that are applicable to hazards and hazardous materials are presented below.

Resource Conservation and Recovery Act

The 1976 Federal Resource Conservation and Recovery Act (RCRA) and the 1984 RCRA Amendments regulate the treatment, storage, and disposal of hazardous and non-hazardous wastes. The legislation mandated that hazardous wastes be tracked from the point of generation to their ultimate fate in the environment. This includes detailed tracking of hazardous materials during transport and permitting of hazardous material handling facilities.

The 1984 RCRA amendments provided the framework for a regulatory program designed to prevent releases from USTs. The program established tank and leak detection standards, including spill and overflow protection devices for new tanks. The tanks must also meet performance standards to

ensure that the stored material will not corrode the tanks. The RCRA was further amended in 1988 to set additional standards for USTs.

In July 2015, the EPA revised the federal UST regulation, which strengthened the 1988 federal UST regulations by increasing emphasis on properly operating and maintain UST equipment. The revision added new operation and maintenance requirements and addressed UST systems deferred in the 1988 UST regulation. The purpose of the revision was to help prevent and detect UST releases, which are a leading source of groundwater contamination. To ensure compliance performance measures reflect the 2015 UST regulation, the Environmental Protection Agency (EPA) and the Association of State and Territorial Solid Waste Management Officials coordinated to update existing compliance performance measures and add new measures. The measures required states to switch from tracking compliance against significant operational compliance measures to the more stringent technical compliance rate (TCR) measures. As of October 2019, only 43.7 percent of USTs were in compliance with all TCR categories.

Comprehensive Environmental Response, Compensation, and Liability Act

The Comprehensive Environmental Response, Compensation, and Liability Act (CERCLA) introduced active federal involvement to emergency response, site remediation, and spill prevention, most notably the Superfund program. The Act was intended to be comprehensive in encompassing both the prevention of, and response to, uncontrolled hazardous substances releases. The Act deals with environmental response, providing mechanisms for reacting to emergencies and to chronic hazardous material releases. In addition to establishing procedures to prevent and remedy problems, it establishes a system for compensating appropriate individuals and assigning appropriate liability. It is designed to plan for and respond to failure in other regulatory programs and to remedy problems resulting from action taken before the era of comprehensive regulatory protection.

Natural Gas Pipeline Safety Act

The Natural Gas Pipeline Safety Act authorizes the U.S. DOT Office of Pipeline Safety to regulate pipeline transportation of natural (flammable, toxic, or corrosive) gas and other gases as well as the transportation and storage of liquefied natural gas. The Office of Pipeline Safety regulates the design, construction, inspection, testing, operation, and maintenance of pipeline facilities. While the federal government is primarily responsible for developing, issuing, and enforcing pipeline safety regulations, the pipeline safety statutes provide for State assumption of the intrastate regulatory, inspection, and enforcement responsibilities under an annual certification. To qualify for certification, a state must adopt the minimum federal regulations and may adopt additional or more stringent regulations as long as they are not incompatible.

STATE

The primary state agencies that are responsible for overseeing regulations and policies regarding hazardous materials are the California Office of Emergency Services (OES), Cal-EPA, Department of Toxic Substances Control (DTSC), California Department of Transportation (Caltrans), California Highway Patrol (CHP), California Water Quality Control Board, and the California Air Resources Board

(CARB). Several laws governing the generation, transport, and disposal of hazardous materials are administered by these agencies. State laws and regulations that are applicable to hazards and hazardous materials are presented below.

California Health and Safety Code

Cal-EPA has established rules governing the use of hazardous materials and the management of hazardous wastes. Many of these regulations are embodied in the California Health and Safety Code. The code includes regulations that govern safe drinking water, substances control, land reuse and revitalization, remediation, restoration, and methamphetamine contaminated cleanups.

California Code of Regulations Title 22 and Title 26

The California Code of Regulations (CCR) Title 22 provides state regulations for hazardous materials, and CCR Title 26 provides regulation of hazardous materials management. In 1996, Cal/EPA established the "Unified Hazardous Waste and Hazardous Materials Management Regulatory Program" (Unified Program) which consolidated the six administrative components of hazardous waste and materials into one program.

LOCAL

Los Angeles County Office of Emergency Management

The Los Angeles County Office of Emergency Management maintains an approved Operational Area Emergency Response Plan (OAERP) for 88 cities, 137 unincorporated communities, and 288 special districts in the county. The OAERP establishes the coordinated emergency management system, which includes prevention, protection, response, recovery and mitigation within the operational area. The OAERP incorporates and complies with the principles and requirements found in Federal and State laws, regulations and guidelines. The OAERP is compliant with the National Incident Management System; the National Response Framework; and, the Standardized Emergency Management System.

The Office of Emergency Management also prepared the 2019 County of Los Angeles All-Hazards Mitigation Plan (AHMP) to meet the Disaster Mitigation Act of 2000. The 2019 AHMP assesses risks posed by natural hazards and identifies a mitigation action plan for reducing the risks in Unincorporated Los Angeles County. The 2019 AHMP is organized to follow the Federal Emergency Management Agency's Local Mitigation Plan Review Tool, which demonstrates how local Hazard Mitigation Plans meet the DMA 2000 regulations.

Los Angeles County Fire Department Health Hazardous Materials Division

The California Environmental Protection Agency designates specific local agencies as Certified Unified Program Agencies (CUPA), typically at the county level. The Los Angeles County Fire Department's Health and Hazardous Materials Division is the CUPA designated for City of Irwindale. The Los Angeles County Fire Department's Health and Hazardous Materials Division is responsible for the implementation of statewide programs within its jurisdiction, including: the Hazardous Waste Generator Program, the Hazardous Materials Release Response Plans and Inventory Program,

the California Accidental Release Prevention Program (Cal-ARP), the Aboveground Storage Tank Program and the Underground Storage Tank Program, etc. Implementation of these programs involves permitting, inspecting, providing education/guidance, investigations, and enforcement.

The Health and Hazardous Materials Division (HHMD) also provides 24-hour emergency services in response to hazardous materials spills or releases and abandonment that occur in areas of HHMD CUPA jurisdiction and in the cities of Los Angeles and Santa Monica. As Deputy Health Officers, the Emergency Response Specialists perform multiple job duties at emergency incidents which include hazard materials categorization, technical advising, entry team participation, and evacuation and re-occupancy determination.

The Los Angeles County Fire Department's HHMD also has a Site Mitigation Unit (SMU) to facilitate the completion of site clean-up projects. The Los Angeles County Fire Department's Site Mitigation Unit's goal is protection of public health and the environment while facilitating completion of site clean-up projects in an expeditious manner. The Los Angeles County Certified Unified Program Agency (LACoCUPA) established its SMU in 1986. Since 1986, the SMU has issued closure for over 800 sites. The SMU's voluntary oversight program operates per Health and Safety Code §101480 which allows oversight of certain contaminated sites. In addition, in May 2008, DTSC delegated corrective action oversight authority to LACoCUPA under chapter 6.5 of Division 20 of California Health and Safety code to implement corrective action under consent agreement at CUPA facilities within its jurisdiction. The SMU voluntary oversight and corrective action oversight programs are options in addition to DTSC and Regional Water Quality Control Board (RWQCB) oversight programs for residents and businesses of Los Angeles County seeking oversight in a cost effective and timely manner for cleanup of their contaminated properties.

City of Irwindale Natural Hazard Mitigation Plan

On February 27, 2013, the City of Irwindale City Council adopted the Natural Hazard Mitigation Plan (NHMP) in accordance with the Federal Disaster Mitigation Act of 2000. The NHMP is a collection of analyses, policies, and actions that serve as a blueprint for how the City of Irwindale can achieve sustainability and disaster resiliency. The Plan ensures that the City of Irwindale will be eligible for future pre-disaster and post-disaster mitigation program funds from the Federal Emergency Management Agency to ensure the health, safety, and welfare of its citizens.

City of Irwindale General Plan

POLICIES: PUBLIC SAFETY ELEMENT

- **Policy 1.** The City of Irwindale will continue to review and if necessary, update its comprehensive emergency preparedness plan and hazard mitigation plan.
- **Policy 2.** The City of Irwindale, at a minimum, will maintain current emergency response standards.
- **Policy 3.** The City of Irwindale will work to reduce potential hazards through conscientious land use planning. The City shall require liquefaction assessment studies as part of development proposals in areas identified by the California Geological Survey as susceptible to liquefaction. The studies shall be conducted in accordance with the California Geological

Survey's Special Publication 117; Guidelines for Evaluating and Mitigating Seismic Hazards in California, and the Southern California Earthquake Center's (1999) procedures to implement Special Publication 117 – Liquefaction Hazards (both documents are incorporated herein by reference). On sites shown to be susceptible to liquefaction, the City shall require the implementation of mitigation measures designed to reduce this hazard to an acceptable level. The City shall require a State-certified engineering geologist or registered civil engineer; have competence in the field of seismic hazard evaluation and mitigation, to review the study at the Applicant's expense. The review shall determine the adequacy of the hazard evaluation and proposed mitigation measures and determine whether the requirements of State law are satisfied, as described in Special Publication 117 by the California Geological Survey.

City of Irwindale Municipal Code

The City of Irwindale's Municipal Code (Code) addresses a variety of hazards and related topics, including hazardous materials and waste and safety. The California Fire Code is adopted as Chapter 15.12 of the Code. Chapter 13.04 of the Code is the Sanitary Sewer and Industrial Waste Ordinance, which regulates the discharge, deposit and disposal of all waste, including any material which may cause pollution of underground or surface waters, in, upon or affecting the City; the design, construction, alteration, use and maintenance of public sewers and house laterals, industrial connection sewers, water pollution control plants, sewage pumping plants, industrial liquid-waste pretreatment plants, dairy screen-chambers, sand and grease interceptors, and appurtenances; the issuance of permits and the collection of fees therefore, and fees to pay the cost of checking plans, inspecting the construction and making record plans of the facilities permitted. Chapter 13.08 of the Code establishes regulations for underground utility districts. Any business operation requesting the use, sale or storage of hazardous materials would also be subject to Conditional Use Permit per IMC Subsection 17.80.030(27).

3.5.3 IMPACTS AND MITIGATION MEASURES

THRESHOLDS OF SIGNIFICANCE

Consistent with Appendix G of the CEQA Guidelines, the proposed Project will have a significant impact from hazards and hazardous materials if it will:

- Create a significant hazard to the public or the environment through the routine transport, use, or disposal of hazardous materials.
- Create a significant hazard to the public or the environment through reasonably foreseeable upset and accident conditions involving the release of hazardous materials into the environment.
- Emit hazardous emissions or handle hazardous or acutely hazardous materials, substances, or waste within one-quarter mile of an existing or proposed school.
- Be located on a site which is included on a list of hazardous materials sites compiled pursuant to Government Code Section 65962.5 and, as a result, would it create a significant hazard to the public or the environment.

- For a Project located within an airport land use plan or, where such a plan has not been adopted, within two miles of a public airport or public use airport, would the Project result in a safety hazard or excessive noise for people residing or working in the Project area.
- Impair implementation of or physically interfere with an adopted emergency response plan or emergency evacuation plan.
- Expose people or structures, either directly or indirectly, to a significant risk of loss, injury or death involving wildland fires.

IMPACTS AND MITIGATION MEASURES

Impact 3.5-1: Potential to create a significant hazard through the routine transport, use, or disposal of hazardous materials or through the reasonably foreseeable upset and accident conditions involving the release of hazardous materials into the environment. (Less than Significant with Mitigation)

CONSTRUCTION PHASE IMPACTS

On-site reconnaissance, historical records, and the past uses of the site indicate that there are no known underground storage tanks or pipelines located on the Project site that contain hazardous materials. The Project site has been highly disturbed through mining, reclamation, and backfilling for nearly 100 years. As previously noted, the Project site has undergone remediation activities to properly fill the historic mining pit and prepare the site for future development. The backfilling and grading were completed in January 2019. According to City records, the site was completely filled with clean soil and is clean to state and federal standards for housing development. Additionally, the LARWQCB adopted Order No. R4-2002-0103, which terminated the WDRs for the site due to the board determining that the property was ready for redevelopment and that discharges of waste at the site had ceased. During the backfilling operation, no pipes or storage tanks were placed on the site, nor were these facilities constructed within the site. Therefore, the disturbance of such items during Project construction activities would not occur.

Construction activities would occur in phases through the development of the proposed Project. Construction equipment and materials would likely require the use of petroleum-based products (oil, gasoline, diesel fuel), and a variety of chemicals including paints, cleaners, and solvents. The use of these materials at a construction site could pose a reasonable risk of release into the environment if not properly handled, stored, and transported. More specifically, a release into the environment could pose significant impacts to the health and welfare of people and/or wildlife, and could result in contamination of water (groundwater or surface water), habitat, and other natural resources. Transportation, storage, use, and disposal of hazardous materials during construction activities would be required to comply with applicable federal, state, and local statutes and regulations. Compliance would ensure that human health and the environment are not exposed to hazardous materials resulting in a significant impact.

OPERATIONAL PHASE IMPACTS

The operational phase would occur after construction is completed and business operations commence on a day-to-day basis. Due to the past use of the site and the recent remediation efforts completed by the City, soil contamination and underground facilities (i.e., underground wells, septic systems, etc.) do not occur within the site.

There is not a specific end user/business established for the building at this time. The uses for the proposed building may include any of the following: Manufacturing Warehouse, Light Industrial, High-Cube Short-term, and High-Cube Transload; refer to Section 2.0, Project Description. These uses are allowed under the Industrial/Business Park land use designation and M-2 "Heavy Manufacturing" zoning designation. However, the Project would be conditioned to specifically prohibit the following uses: fulfillment center, parcel hub, and cold storage facility.

Depending on the ultimate end user, there is a risk of release of hazardous materials into the environment if they are not stored and handled in accordance with best management practices. There is a wide variety of hazardous materials that could be used as part of industrial and commercial operations within the proposed warehouse building. Any operations that involve the use of hazardous materials would be required to have the hazardous material transported, stored, used, and disposed of in compliance with local, state, and federal regulations. The Los Angeles County Fire Department Health Hazardous Materials Division is the CUPA for Los Angeles County and is responsible for the implementation of statewide programs within the City including Hazardous Materials Business Plan (HMBP) requirements, among numerous other programs. Implementation of this program involves permitting, inspecting, providing education/guidance, investigations, and enforcement. The Los Angeles County Fire Department Health Hazardous Materials Division also requires facilities/businesses to report hazardous materials using the California Environmental Reporting System (CERS) that exceed the hazardous materials reporting thresholds outlined in their Hazardous Materials Reporting Matrix as well as the thresholds under State Law, pursuant to Health & Safety Code (HSC), Chapter 6.95, Article 1, §25507. State law requires that specified changes or updates to a facility's reportable inventory be submitted in CERS within 30 days (HSC §25508.1). In addition, a facility is required to submit the hazardous materials inventory annually by the deadline set by the Los Angeles County Fire Department Health Hazardous Materials Division. Consistency with local, state, and federal regulations related to the transport, storage, use, and disposal of hazardous materials ensures that the potential risk of upset and accident conditions from a release is minimized to the extent practical.

CONCLUSION

Implementation of the federal, state, and local requirements for the proper handling, transport, and disposal of hazardous materials would reduce potential impacts associated with the Project. As the specific end user is not currently known, compliance with the following mitigation measure will ensure that business operators consult with the Los Angeles County Fire Department Health Hazardous Materials Division for education/guidance related to specific requirements that their businesses must implement in the day-to-day operations. This includes the establishment of management practices for handling, storing, and disposal of hazardous materials, including fuels,

paints, cleaners, solvents, pesticides, fertilizers, etc., during operations to reduce the potential for spills and to direct the safe handling of these materials if encountered. It also includes consultation related to specific permits that a business may require in order to operate (i.e. permits of underground storage tanks if they are part of the business). Impacts associated with potential hazards or hazardous conditions as a result of the proposed Project would be **less than significant** with mitigation**.**

MITIGATION MEASURE(S)

Mitigation Measure 3.5-1*: Prior to the commencement of a business operation that involves the transport, storage, use, or disposal of quantities of hazardous materials that exceed the hazardous materials reporting thresholds set by the Los Angeles County Fire Department Health Hazardous Materials Division and State within the Project site, the business owner shall submit a Hazardous Materials Business Plan (HMBP) for review and approval by the Los Angeles County Fire Department Health Hazardous Materials Division. The HMBP shall establish management practices for handling, storing, and disposal of hazardous materials, including fuels, paints, cleaners, solvents, pesticides, fertilizers, etc., during operations to reduce the potential for spills and to direct the safe handling of these materials if encountered. The HMBP shall also identify the appropriate area for mixing/loading pesticides and fertilizers and for fuel dispensing, which shall be separated to ensure safety. The areas shall be designed with spillage catchments such that any accidental spillage is prevented from entering waterways. The business owner shall also consult with the Los Angeles County Fire Department Health Hazardous Materials Division to ensure that the particular business operations are compliant with all local, state, and federal regulations relative to their operations (i.e. proper permits for the installation and use of an underground storage of hazardous substances (USTs)). The approved HMBP and any other permit deemed to be required in order to commence the specific business operations shall be maintained onsite and all personnel shall acknowledge that they have reviewed and understand the HMBP and any other permit requirements.*

Impact 3.5-2: Potential to emit hazardous emissions or handle hazardous or acutely hazardous materials, substances, or waste within one-quarter mile of an existing or proposed school. (Less than Significant)

The closest school to the Project site is Alice M. Ellington Elementary School. The southwestern corner of this school site, which contains a vacant field area, is located approximately 0.20 mile east of the southeastern corner of the proposed Project site. The nearest building on the school site is located approximately 0.24 mile east of the southeastern corner of the proposed Project site; the proposed warehouse building would be over 0.25 mile from the nearest building at Alice M. Ellington Elementary School.

Depending on the ultimate end user, there is a risk of release of hazardous materials into the environment if they are not stored and handled in accordance with best management practices. As noted previously, the Los Angeles County Fire Department Health Hazardous Materials Division is the CUPA for Los Angeles County and is responsible for the implementation of statewide programs within the City including HMBP requirements, among numerous other programs. Implementation of this program involves permitting, inspecting, providing education/guidance, investigations, and

enforcement. Consistency with local, state, and federal regulations related to the transport, storage, use, and disposal of hazardous materials ensures that the potential risk of upset and accident conditions from a release is minimized to the extent practical. The proposed Project business owner would be required to submit a HMBP, as required by Mitigation Measures 3.5-1.

By implementing Mitigation Measure 3.5-1, the Project business owner would establish management practices for handling, storing, and disposal of hazardous materials, including fuels, paints, cleaners, solvents, pesticides, fertilizers, etc., during operations to reduce the potential for spills and to direct the safe handling of these materials if encountered. Additionally, the proposed warehouse building would be over 0.25 mile from the nearest building at Alice M. Ellington Elementary School. Therefore, implementation of the proposed Project would result in a **less than significant** impact relative to this topic.

Impact 3.5-3: Potential to result in impacts from being included on a list of hazardous materials sites compiled pursuant to Government Code Section 65962.5. (Less than Significant)

As previously noted, the backfilling and grading of the project site was completed in January 2019. The site was filled entirely with clean soil and is clean to state and federal standards for housing developments. Additionally, the Project site is not on a list of hazardous materials sites compiled pursuant to Government Code Section 65962.5. Implementation of the proposed Project would have a **less than significant** impact with regards to this environmental issue.

Impact 3.5-4: Potential to result in a safety hazards for people residing or working on the Project site as a result of public airport, public use airport, or private airstrip. (No Impact)

The Federal Aviation Administration (FAA) establishes distances of ground clearance for take-off and landing safely based on such items as the type of aircraft using the airport. The Project site is not located within the vicinity of a public airport, public use airport, or private airstrip. The closest airport is the San Gabriel Valley Airport in El Monte, approximately six miles southwest of the Project site. According to the San Gabriel Valley Airport Layout Plan, the Project site is not located within the Aircraft Operating Area, nor is the Project located in any identified safety zones.

The proposed warehouse industrial building would extend to a maximum height of 51 feet and would not protrude into active airspace. The proposed building height is consistent with surrounding uses to the north of the site. Therefore, the Project would have **no impact** related to airport safety hazards.

Impact 3.5-5: Potential to impair implementation of or physically interfere with an adopted emergency response plan or emergency evacuation plan. (Less than Significant)

As part of the Project review process, the Los Angeles County Fire Department would review the site plans to confirm that adequate emergency access is provided. The Project proposes a 28-foot-wide fire lane surrounding the proposed warehouse building and two access driveways along Vincent

Avenue. The appropriate turning radiuses have been planned to accommodate fire trucks on-site in the event of an emergency. While the proposed Project will minimally impact traffic flow during the temporary construction period, it will not conflict with or interfere with emergency evacuation of the Project area. Arrow Highway, Vincent Avenue, and the surrounding roadways would continue to function as emergency access routes if necessary. No revisions to any adopted emergency plans (i.e., the Los Angeles County Office of Emergency Management OAERP and City of Irwindale NHMP) would be required as a result of the proposed Project. The proposed Project does not include any actions that would impair or physically interfere with an adopted emergency response plan or emergency evacuation plan. Future uses on the Project site will have access to the County and City resources that establish protocols for safe use, handling and transport of hazardous materials. Construction activities are not expected to result in any unknown significant road closures, traffic detours, or congestion that could hinder the emergency vehicle access or evacuation in the event of an emergency. Implementation of the proposed Project would result in **less than significant** impact on this environmental topic.

Impact 3.5-6: Potential to expose people or structures to a risk of loss, injury or death from wildland fires. (Less than Significant)

The Project site is not located within an area or adjacent to an area identified as having the potential for wildland fires. The Project site is within an urbanized area of the City and would be developed with urban uses. The Project will be required to meet all fire code requirements, including the provision of fire hydrants and sprinklers, which will assist with fire suppression efforts if a fire was to occur. Because the Project site is not located within a designated wildfire hazard area and is located in a developed, urbanized area, this is a **less than significant** impact and no mitigation is required.

This page intentionally left blank.

This section describes the regional and local hydrology and water quality, regulatory setting, potential impacts that may result from Project implementation, and measures to reduce potential impacts to associated with hydrology and water quality. This section is based in part on the following documents, reports and studies: City of Irwindale General Plan Update (City of Irwindale as amended through June 2008), Draft Environmental Impact Report (State Clearinghouse No. 2005071047) – City of Irwindale General Plan (City of Irwindale 2006), Basin Plan for the Coastal Watersheds of Los Angeles and Ventura Counties (Los Angeles Regional Water Quality Control Board 2014), Five-Year Water Supply Plan (Main San Gabriel Basin Watermaster 2019), Main San Gabriel Basin Watermaster (MSGBW) 2018-2019 Annual Report (MSGBW 2020), State of the Watershed – Report on Surface Water Quality: The San Gabriel River Watershed (California Regional Water Quality Control Board – Los Angeles Region 2000), Low Impact Development Standards Manual (County of Los Angeles Department of Public Works 2014), 2015 Urban Water Management Plan (Azusa Light & Water 2016), Santa Fe Dam Basin Master Plan and Environmental Assessment (US Army Corps of Engineers 2011), Vincent Avenue Industrial Building Hydrology/LID Report (WestLAND Group 2017), and Web Soil Survey (NRCS 2020).

No comments were received during the public review period or scoping meeting for the Notice of Preparation regarding this topic. Full comments received are included in Appendix A.

3.6.1 ENVIRONMENTAL SETTING

REGIONAL HYDROLOGY

The City of Irwindale is located in the eastern portion of the Los Angeles Region. The Los Angeles Region encompasses all coastal watersheds and drainages flowing to the Pacific Ocean between Rincon Point (on the coast of western Ventura County) and the eastern Los Angeles County line, as well as the drainages of five coastal islands (i.e., Anacapa, San Nicolas, Santa Barbara, Santa Catalina, and San Clemente). The Region also includes all of the coastal waters within three nautical miles off the continental and island coastlines.

The majority of the Los Angeles Region lies within the western portion of the Transverse Ranges Geomorphic Province. The San Andreas transform fault system dissects these western Transverse Ranges, forming the boundary between the North American and Pacific tectonic plates. This fault system bends in an east-west direction through the Transverse Ranges, extending northwesterly from the Salton Sea in southern California to Cape Mendocino in northern California for over 700 miles. This portion of the San Andreas fault system, commonly referred to as the “Big Bend”, formed from complex movements of the Pacific Plate against the North American Plate. Compression generated by such forces resulted in uplift of the Transverse Ranges, which have a conspicuous east-west trend (unlike other major ranges in the continental United States, which typically have a roughly north-south trend).

The Los Angeles Region consists of ten, unique Watershed Management Areas (WMAs):

- Ventura River Watershed;
- Santa Clara River Watershed;

- Calleguas Creek Watershed;
- Los Angeles River Watershed;
- Malibu Creek Watershed;
- Ballona Creek Watershed;
- San Gabriel River Watershed;
- Los Cerritos Channel Watershed;
- Dominguez Watershed; and
- Channel Islands Watershed.

The rivers and streams of the Los Angeles Region flow from headwaters in the Santa Monica Mountains National Recreation Area, the Angeles National Forest, and Los Padres National Forest through urbanized foothill and valley areas, high density residential, industrial, or intensely farmed coastal areas, and terminates at highly utilized recreational beaches and harbors.

The Los Angeles Regional Water Quality Control Board (LARWQCB) regulates over 1,000 discharges of wastewater from a variety of industrial and municipal sources and oversees the vast network of municipal separate sewer systems serving the two counties and 99 cities in the Region. Generally, largely uncontrolled discharges of pollutants from municipal separate storm sewer systems and from nonpoint sources are believed to be the greatest threats to rivers and streams within the Region. Recent advances in permitting municipal separate storm sewer system discharges, and control of certain nonpoint sources are expected to remedy many of these threats.

Groundwater accounts for most of the Los Angeles Region's local (i.e., non-imported) supply of fresh water; however, the surface water and groundwater supplies within the Los Angeles Region are insufficient to support the large population. To meet the potable water demand, the Los Angeles Region has developed a complex system of aqueducts to import water to support a rapidly growing population and economy. In addition, the demand for water is increasingly being fulfilled by the use of reclaimed water for indirect potable reuse (i.e., groundwater recharge) and non-potable purposes such as landscape irrigation and industrial processing and servicing.

The Los Angeles Region began importing water in 1913, and today, imported water makes up half of the demand for potable water in the region. The Los Angeles Region currently relies on importing water through the Los Angeles Aqueducts, the California Aqueduct (i.e., The State Water Project), and the Colorado River Aqueduct.

The region is separated into 25 major groundwater basins to collect and treat groundwater to supplement the imported water. The 25 major groundwater basins in the region include the:

- Antelope Valley Groundwater Basin;
- Action Valley Groundwater Basin;
- Santa Clara River Valley Groundwater Basin;
- Hungry Valley Groundwater Basin;
- Lockwood Valley Groundwater Basin;
- Ojai Valley Groundwater Basin;
- Upper Ojai Valley Groundwater Basin;

- Ventura River Valley Groundwater Basin;
- Arroyo Santa Rosa Valley Groundwater Basin;
- Las Posas Valley Groundwater Basin;
- Pleasant Valley Groundwater Basin;
- Conejo Groundwater Basin;
- Tierra Rejada Groundwater Basin;
- Russel Valley Groundwater Basin;
- Thousand Oaks Area Groundwater Basin;
- Hidden Valley Groundwater Basin;
- Malibu Groundwater Basin;
- Coastal Plain of Los Angeles Groundwater Basin;
- Coastal Plain of Orange Country Groundwater Basin;
- Raymond Groundwater Basin;
- Upper Santa Ana Valley Groundwater Basin;
- San Fernando Valley Groundwater Basin; and
- San Gabriel Valley Groundwater Basin.

The City of Irwindale is located in the eastern portion of Los Angeles Region and is within the Los Angeles-San Gabriel Hydrologic Unit, bound by the San Gabriel Mountain Range, which is the origin for most of the region's surface runoff.

The following sections describe the climate, watershed, hydrologic region, and groundwater specific to the City of Irwindale.

Climate

Precipitation generally occurs as rainfall throughout the Los Angeles Region. Annual precipitation in the Los Angeles Region varies between each county. The average annual rainfall for Los Angeles County is 15.7 inches. However, large variations exist within Los Angeles County, as indicated by average annual rainfall of 34.2 inches at Cogswell Dam in the San Gabriel Mountains and average annual rainfall of 13.71 inches for the coastal plain part of the County.

The City of Irwindale's climate is mild, and generally warm and temperate. The average annual temperature is 64.7 degrees with the average temperatures ranging from January lows of 55.0 F to an August high of 75.9 F. The average annual rainfall in the Irwindale area ranges between 18 and 20 inches. The range of annual precipitation for the San Gabriel Basin as a whole, averaged between 10 to 40 inches for the period between 1972 and 1994. Virtually all of the annual rainfall in the Basin occurs during the months of November through April. Rainfall during the summer months is generally limited to widely scattered thundershowers. There are approximately ten days per year that include light to moderate rainfall of 0.5 inches or more in 24-hours and another ten days that have very light rainfall of less than 0.5 inches per day.

Watersheds

A watershed is a region that is bound by a divide that drains to a common watercourse or body of water. Watersheds serve an important biological function, oftentimes supporting an abundance of aquatic and terrestrial wildlife including special-status species and anadromous and native local fisheries. Watersheds provide conditions necessary for riparian habitat.

The State of California uses a hierarchical naming and numbering convention to define watershed areas for management purposes. This means that boundaries are defined according to size and topography, with multiple sub-watersheds within larger watersheds. Table 3.6-1 shows the primary watershed classification levels used by the State of California. The second column indicates the approximate size that a watershed area may be within a particular classification level, although variation in size is common.

TABLE 3.6-1. STATE OF CALIFORNIA WATERSHED HIERARCHY NAMING CONVENTION

WATERSHED LEVEL	*APPROXIMATE SQUARE MILES (ACRES)*	*DESCRIPTION*
Hydrologic Region (HR)	12,735 (8,150,000)	Defined by large-scale topographic and geologic considerations. The State of California is divided into ten HRs.
Hydrologic Unit (HU)	672 (430,000)	Defined by surface drainage; may include a major river watershed, groundwater basin, or closed drainage, among others.
Hydrologic Area (HA)	244 (156,000)	Major subdivisions of hydrologic units, such as by major tributaries, groundwater attributes, or stream components.
Hydrologic Sub-Area (HSA)	195 (125,000)	A major segment of an HA with significant geographical characteristics or hydrological homogeneity.

SOURCE: CALIFORNIA DEPARTMENT OF WATER RESOURCES, 2012.

Hydrologic Region

The City of Irwindale is located within the Los Angeles-San Gabriel Hydrologic Unit of the South Coast Hydrologic Region. Portions of the City are located either in the Los Angeles WMA or the San Gabriel River WMA. The project site is located within the Walnut Creek Watershed, which is a sub-watershed of the Upper San Gabriel River Watershed Area within the San Gabriel River WMA. See Figure 3.6-1. The Upper San Gabriel River Watershed Area is 689-square miles, bound by the San Gabriel Mountains to the north, most of San Bernardino/Orange County to the east, the division of the Los Angeles River from the San Gabriel River to the west, and the Pacific Ocean to the south.

The watershed receives drainage from a large area of eastern Los Angeles County with headwaters originating in the San Gabriel Mountains, which consists of extensive areas of undisturbed riparian and woodland habitats in the upper reaches. The upper San Gabriel River and its tributaries remain relatively untouched; however, the West Fork and East Fork of the San Gabriel River includes large wilderness areas and other areas in the upper watershed are utilized heavily for recreational use, including picnicking, off road vehicle use, fishing, and hiking, which threaten the water quality and aquatic and riparian habitats. Additionally, vast amounts of naturally eroding sediment from the rugged San Gabriel Mountains settle in reservoirs behind flood control dams found in the upper

watershed. The improper sediment washing from these reservoirs also has the potential to impact aquatic habitats and groundwater recharge areas.

In the San Gabriel Valley, the middle reaches of the river have been extensively modified in order to control flood and debris flows and to recharge groundwater. The watershed is hydraulically connected to the Los Angeles River through the Whittier Narrows Reservoir (normally only during high storm flows). The lower part of the river flows through a concrete-lined channel in a heavily urbanized portion of the Los Angeles Coastal Plain, before becoming a soft bottom channel once again near the ocean in the City of Long Beach. The lower watershed encompasses an area that historically consisted of extensive wetlands. Large electrical power lines follow the river along the channelized portion; nurseries, small stable areas, and storage facilities are located in these areas. Flow in these lower reaches is dominated by effluent from several municipal wastewater treatment facilities and Municipal Separate Storm Sewer Systems (MS4s) discharges. Impairments vary by reach; depending on the reach, they may include metals, PCBs, pesticides, bacteria, and trash.

Groundwater

Water resources in the City and throughout the San Gabriel Valley are sustained by substantial groundwater basins, which are used as reservoirs to store water during the wet years. These underground reservoirs are tapped throughout the year according to the demand of water. Groundwater conditions in these basins are influenced by natural hydrologic conditions such as percolation of precipitation, groundwater seepage, and ephemeral stream flow within the watershed areas. The groundwater supplies are also augmented with recharged surface water purchased through the State Water Project.

The San Gabriel Valley Groundwater Basin is located in eastern Los Angeles County and includes the water-bearing sediments underlying most of the San Gabriel Valley and a portion of the upper Santa Ana Valley that lies in Los Angeles County. The basin is bounded on the north by the Raymond Fault and the contact between the Quaternary sediments and consolidated basement rocks of the San Gabriel Mountains. Exposed consolidated rocks of the Repetto, Merced, and Puente Hills bound the basin on the south and west, and the Chino Fault and the San Jose Fault form the eastern boundary.

The proposed Project is located within the Main San Gabriel Basin (MSGB). Urbanization of the San Gabriel Valley in the 1940s led to an increased demand for water drawn from the MSGB. By the 1950s, the MSGB went into overdraft (water production exceeding the amount of water being replenished into the basin) due to the ensuing rise in water consumption and extended period of drought. As a result of the decrease in available water supply, parties downstream who relied on the MSGB for a large portion of their natural water supply initiated legal action on behalf of the downstream users to guarantee a source of water to downstream users. On January 2, 1968 a complaint was filed in the Superior Court of the State of California (Case #924128, Upper San Gabriel Valley Municipal Water District, Plaintiff, vs. City of Alhambra, et al., Defendants) to bring about adjudication of water rights in the MSGB.

In January 1973, the Los Angeles County Superior Court entered a judgment creating a new governing body (the Main San Gabriel Basin Watermaster) and described a program for

management of water in the Basin. The Main San Gabriel Basin Watermaster determines the annual Operating Safe Yield (OSY) (the amount of groundwater that can be safely extracted) for the succeeding fiscal year and notifies pumpers of their allotted shares. Total water demand in 2018-19 was about 220,000 acre-feet, consisting of approximately 183,100 acre-feet of groundwater production, 7,000 acre-feet of treated local surface water, 24,900 acre-feet of treated imported water, and 5,000 acre-feet of recycled water. The total water demand is about 9 percent lower than the recent ten-year average of approximately 240,000 acre-feet.

The major sources of recharge to the MSGB are direct penetration of rainfall on the valley floor, percolation of runoff from the mountains, percolation of imported water and return flow from applied water. Rainfall occurs predominantly in the winter months and is more intense at higher elevations and closer to the San Gabriel Mountains. The Baldwin Park Key Well is used as the benchmark for determining how the groundwater supply for the entire MSGB is trending. In accordance with the 1973 Judgement, the Watermaster manages the Basin to maintain the groundwater level at the Baldwin Park Key Well between 200 feet and 250 feet, to the extent possible. The lowest the groundwater level at Baldwin Park Key Well ever declined to was about 169 feet in November of 2018. However, as of February 28, 2020, the groundwater level at Baldwin Park Key Well was measured to be at to 209.4 feet.

LOCAL SETTING

The Project site is relatively flat and ranges in elevation from approximately 400 to 460 feet above sea level. There are no natural water courses in the Project site. The Project site is currently undeveloped and the general location of the former Irwindale Pit No. 1 (Manning Brothers Pit) Project, which has been graded and backfilled as part of site remediation.

The Project site is in the Walnut Creek Sub-Watershed within the Upper San Gabriel River Watershed, which is part of San Gabriel River WMA. Water service to the City of Irwindale is provided by six different retail water companies. The Project site is located in the service area of the Azusa Light & Water. The City of Azusa Water Department, which owns the Azusa Light & Water (ALW), provides basic water service to the largest portion of Irwindale from its most northeasterly boundaries to Ornelas Street, including all of the Santa Fe Dam area located to the east of the San Gabriel River Freeway. ALW's water supply consists of imported water, groundwater, and surface water. ALW distributes water to its 23,000 service customers through a 281-mile network of distribution mains ranging from two to 30 inches in size. It is estimated that the proposed Project would generate between 15 and 250 employees, which is estimated to require between 2,937 gallons per day (3.3 acre-feet per year [AFY]) and 48,950 gallons per day (approximately 54.9 AFY).

Groundwater

As previously mentioned, the Project site is located within the MSGB, and will be provided water service by ALW. ALW's groundwater uses are described in the City of Azusa's 2015 UWMP. A description of the groundwater basin and a discussion of historical and projected groundwater pumping is provided below.

BASIN BOUNDARIES, SOILS, AND STORAGE CAPACITY

ALW obtains its groundwater supply from the MSGB. The basin is located in eastern Los Angeles County and overlies the majority of the San Gabriel Valley with a surface area of 167 square miles of valley terrain. The basin is bounded by the San Gabriel Mountains to the north, San Jose Hills to the east, Puente Hills to the south, Raymond Basin to the northwest, and by a series of hills and the Whittier Narrows to the southwest. As a low gap between the Merced and Puente Hills, the Whittier Narrows is a natural topographic divide that directs the movement of groundwater in the basin as groundwater levels generally follow topographic slope, with groundwater flowing from the edges of the basin towards the center and exiting southwestward through the Whittier Narrows.

Groundwater in the MSGB is replenished by percolation from precipitation, receiving an average annual precipitation of 18.5 inches, and by percolation of runoff from the surrounding mountains. The basin is also replenished from imported water conveyed in the San Gabriel River and also from recycled water (in lower portions of basin only). Since the basin is mostly urbanized and soil surfaces have been paved to construct roads, buildings, and flood channels, only a small portion of basin soils are capable of transmitting water to the water-bearing alluvial deposits below. As a result, the basin is prone to overdraft. To help supplement the basin, the San Gabriel Valley Municipal Water District (San Gabriel District or "SGVMWD") was formed in 1959 to meet the supplemental water needs of the Cities of Alhambra, Azusa, Monterey Park, and Sierra Madre by replenishing the basin at five locations.

Approximately 200 active wells and 50 inactive wells capable of producing over 500,000 AFY of groundwater are located throughout the MSGB. The total storage capacity of the basin is estimated to be approximately 10,400,000 acre-feet (AF). Although the safe yield capacity of the basin is estimated to be 150,000 AFY, groundwater extraction in the basin typically exceeds the safe yield capacity of the basin, and thus imported water is used to supplement natural precipitation and streamflow in 17 spreading basins. The spreading basins are managed by the Los Angeles County Department of Public Works (LACDPW) and are used to replenish the Main Basin with a total re-charge capacity of over 600,000 AFY. Six of ALW's twelve wells are located in the San Gabriel Canyon Spreading Grounds located near the San Gabriel River (northwest portion of City).

According to the MSGB Watermaster's Five Year Water Quality and Supply Plan, total basin production during fiscal year 2018–19 was about 190,200 AF, which was about 9 percent lower than the previous year. Production in excess of water rights during fiscal year 2018–19 was about 35,100 AF, about 12 percent lower than the prior year and about 5 percent lower than the long-term average of about 37,000 AF. The Watermaster aggressively responded to the decreasing trend of the groundwater level at the Baldwin Park Key Well during fiscal year 2018–19 by establishing an OSY of 150,000 AF for fiscal year 2019–20. As stated, as of February 28, 2020, the groundwater level at Baldwin Park Key Well had risen to 209.4 feet from 196 feet in June 2019.

PAST AND PROJECTED FUTURE GROUNDWATER PUMPING

ALW maintains 13 groundwater wells, 11 of which are active and located in the MSGB, which have produced approximately 57 to 78 percent of the total water supply between 2011 to 2015. Well No.

9 and Well No. 13 are currently inactive due to water quality issues. The wells range in capacity from 900 gpm to 3,000 gpm, as shown in Table 3.6-2.

TABLE 3.6-2. ALW GROUNDWATER WELLS

WELL NUMBER	*LOCATION*	*CAPACITY (GPM)*
1	Spreading Grounds	3,000
2	Spreading Grounds	1,500
3	Spreading Grounds	2,900
4	Spreading Grounds	2,900
5	Hermitage Lane south of Sierra Madre Boulevard	900
6	12th Street near Northside Park	3,000
7	11th Street/McKeever Avenue	1,000
8	11th Street/Orange Avenue	2,000
9	710 West Gladstone	n/a
10	Vernon Avenue/Little Dalton	2,500
11	Spreading Grounds	2,200
12	Spreading Grounds	1,850
13	Aspen Well	n/a
Total Capacity		23,750

SOURCE: ALW 2015 UWMP, 2015.

All active wells listed in Table 3.6-2 are equipped with flowmeters to measure water production. Water production is recorded monthly by ALW water staff and reported annually to the DWR. Between 2010 to 2015, groundwater extraction has ranged from approximately 11,800 AF to 16,100 AF (average of 12,993 AF). Table 3.6-3 displays ALW's groundwater production for the years 2010 to 2015.

TABLE 3.6-3. GROUNDWATER PRODUCTION (TOTAL ALL WELLS)

YEAR	*PRODUCTION (AF)*
2010	12,389
2011	11,874
2012	11,813
2013	16,140
2014	13,396
2015	12,345
Average	**12,993**
2010 UWMP Average	**18,837**

SOURCE: ALW 2015 UWMP, 2015.

Between 2010 to 2015, ALW has consumed roughly 20,000 AF of water on an annual basis. Overall, two-thirds of ALW's supplies consist of groundwater pumped from the Main Basin, and one-third consists of treated surface water from the San Gabriel River. However, as noted earlier, the San Gabriel River is a major contributor to groundwater supplies in the Main Basin. As a result, the river truly accounts for much more than just one-third of ALW's supplies. Table 3.6-4 presents a breakdown of ALW's water supply.

TABLE 3.6-4: ALW'S WATER SUPPLY SUMMARY

YEAR	IMPORTED WATER	GROUND WATER	SURFACE WATER	TOTAL
2010	0	12,389	7,406	19,795
2011	0	11,874	7,772	19,646
2012	0	11,813	9,019	20,832
2013	0	16,140	4,603	20,743
2014	0	13,396	6,232	19,628
2015	0	13,345	4,701	17,046
Average	**0**	**12,993**	**6,622**	**19,615**
2010 UWMP Average	**0**	**18,837**	**5,122**	**23,997**

SOURCE: CITY OF AZUSA UWMP 2015

According to the ALW 2015 UWMP, ALW intends to focus its efforts on its existing water supply infrastructure in order to maximize its local supply capacity, including testing and reactivating inactive wells (i.e., Aspan Well & Well No. 9). ALW's supply reliability in the near future is expected to increase through continued upgrades to its groundwater facilities, expansion of the Joseph F. Hsu Filtration Plant (from 12 to 16 MGD), continued access to imported water, and the future potential use of recycled water. Based on the current capacity of ALW's supply infrastructure, ALW expects to meet the needs of its customers through 2040.

Drainage

The western portions of the City of Irwindale located in the Los Angeles River WMA and the eastern portions of the City are located within the San Gabriel River WMA. The City drains into Sawpit Wash via the Buena Vista Channel and goes into Rio Hondo Reach 2, which is tributary to the Los Angeles River System. Receiving Water Monitoring is conducted three times per year during wet weather and twice per year during dry weather as stated in Attachment E of the 2012 MS4 Permit.

Historically, stormwater management has consisted of a network of impervious surfaces that directly convey stormwater runoff to curb and gutter systems, the storm drain conveyance system, and downstream receiving waters. Until recently, conventional storm drain and flood control systems were designed to convey stormwater away from developed areas as quickly as possible to manage the risk of floods for homes and development. However, the County's most recent MS4 Permits require that stormwater management provide a more comprehensive approach to address stormwater runoff water quality and groundwater recharge opportunities.

According to the Hydrology/LID Report prepared for the Project, the pre-developed condition currently retains all runoff on-site. The northerly portion of the Project site collects and conveys negligible runoff to an existing storm drain system owned by the City of Irwindale. Based on the study, it was determined that the existing Project site discharges zero flow to the off-site storm drain system.

Flooding

Flooding events can result in damage to structures, injury or loss of human and animal life, exposure of waterborne diseases, and damage to infrastructure. In addition, standing floodwater can destroy agricultural crops, undermine infrastructure and structural foundations, and contaminate groundwater.

The Project site is currently located in Zone X, protected by levee, which by definition indicates an area protected by levees from the 1% annual chance flood. The Project site is not located within the 100-year or 200-year floodplain as delineated on the most recent 200-year flood plain maps for Irwindale. Figure 3.6-2 shows the Project site and the nearest 500-year flood boundaries, which is south of the Project site in the City of West Covina.

Dam Failure

The City of Irwindale is located in an area that is subject to dam inundation. As shown in Figure 3.6-3, the Project is located within a dam inundation area for the San Gabriel No. 1 Dam. Dam failure is generally a result of structural instability caused by improper design or construction, instability resulting from seismic shaking, or overtopping and erosion of the dam. Larger dams that are higher than 25 feet or with storage capacities over 50 acre-feet of water are regulated by the California Dam Safety Act, which is implemented by the California Department of Water Resources, Division of Safety of Dams (DSD). The DSD is responsible for inspecting and monitoring these dams. The Act also requires that dam owners submit to the California Office of Emergency Services inundation maps for dams that would cause significant loss of life or personal injury as a result of dam failure. The Los Angeles County Office of Emergency Services is responsible for developing and implementing a Dam Failure Plan that designates evacuation plans, the direction of floodwaters, and provides emergency information.

Stormwater Quality

Potential hazards to surface water quality include the following nonpoint pollution problems: high turbidity from sediment resulting from erosion of improperly graded construction projects, concentration of nitrates and dissolved solids from agriculture or surfacing septic tank failures, contaminated street and lawn run-off from urban areas, and warm water drainage discharges into cold water streams.

The most critical period for surface water quality is following a rainstorm which produces significant amounts of drainage runoff into streams at low flow, resulting in poor dilution of contaminates in the low flowing stream. Such conditions are most frequent during the fall at the beginning of the rainy season when stream flows are near their lowest annual levels. Besides the greases, oils, pesticides, litter, and organic matter associated with such runoff, heavy metals such as copper, zinc, and cadmium can cause considerable harm to aquatic organisms when introduced to streams in low flow conditions.

Urban stormwater runoff was managed as a non-point discharge (a source not readily identifiable) under the Federal Water Pollution Control Amendments of 1972 (PL 92-500, Section 208) until the mid-1980s. However, since then, the Federal Environmental Protection Agency has continued to

develop implementing rules which categorize urban runoff as a point source (an identifiable source) subject to National Pollution Discharge Elimination System (NPDES) permits. Rules now affect medium and large urban areas, and further rulemaking is expected as programs are developed to meet requirements of Federal water pollution control laws.

Surface water pollution is also caused by erosion. Excessive and improperly managed grading, vegetation removal, quarrying, logging, and agricultural practices all lead to increased erosion of exposed earth and sedimentation of watercourses during rainy periods. In slower moving water bodies these same factors often cause a buildup of siltation, which ultimately reduces the capacity of the water system to percolate and recharge groundwater basins, as well as adversely affecting both aquatic resources and flood control efforts.

303(D) IMPAIRED WATER BODIES

Section 303(d) of the federal Clean Water Act requires States to identify waters that do not meet water quality standards or objectives and thus, are considered "impaired." Once listed, Section 303(d) mandates prioritization and development of a Total Maximum Daily Load (TMDL). The TMDL is a tool that establishes the allowable loadings or other quantifiable parameters for a waterbody and thereby the basis for the States to establish water quality-based controls. The purpose of TMDLs is to ensure that beneficial uses are restored and that water quality objectives are achieved.

According to the California Water Quality Control Monitoring Council, which is part of California Environmental Protection Agency, Natural Resources, there are many areas within Los Angeles Region which are considered Section 303(d) impaired waterbodies. Those areas in the regional vicinity of the Project site that are impaired include the Walnut Creek Wash and the Santa Fe Dam Park Lake.

The Walnut Creek Wash is a 12-mile river/stream, located approximately 0.2 miles south of the project site, that drains from the Puddingstone Reservoir. According to the California Water Board's *CWA Section 303(d) list 2016 Integrated Report,* the Walnut Creek Wash was listed as early as 1996 for Unknown Toxicity (Source Unknown) and then again in 2010 and 2014 for impairment of benthic community structure (Source Unknown) and unknown indicator bacteria (Source Unknown), respectively. The Santa Fe Dam Park Lake is a 20-acre lake and reservoir located approximately 0.9 miles northwest of the Project site. The Santa Fe Dam Park Lake was listed as early as 1996 for unknown toxicity (Source Unknown) and again in 2014 for Polychlorinated Biphenyls (Source Unknown).

3.6.2 REGULATORY SETTING

There are a number of regulatory agencies whose responsibility includes the oversight of the water resources of the state and nation including the Federal Emergency Management Agency (FEMA), the US Environmental Protection Agency (EPA), the State Water Resources Board, and the LARWQCB. The following is an overview of the federal, state and local regulations that are applicable to the proposed Project.

FEDERAL AND STATE

Clean Water Act

The Clean Water Act (CWA), initially passed in 1972, regulates the discharge of pollutants into watersheds throughout the nation. Section 402(p) of the act establishes a framework for regulating municipal and industrial stormwater discharges under the NPDES Program. Section 402(p) requires that stormwater associated with industrial activity that discharges either directly to surface waters or indirectly through municipal separate storm sewers must be regulated by an NPDES permit.

The State Water Resources Control Board (SWRCB) is responsible for implementing the Clean Water Act and does so through issuing NPDES permits to cities and counties through regional water quality control boards. Federal regulations allow two permitting options for stormwater discharges (individual permits and general permits). The SWRCB elected to adopt a statewide general permit (Water Quality Order No. 2013-001-DWQ-DWQ).

Federal Emergency Management Agency

Los Angeles County is a participant in the National Flood Insurance Program (NFIP), a Federal program administered by FEMA. Participants in the NFIP must satisfy certain mandated floodplain management criteria. The National Flood Insurance Act of 1968 has adopted as a desired level of protection, an expectation that developments should be protected from floodwater damage of the Intermediate Regional Flood (IRF). The IRF is defined as a flood that has an average frequency of occurrence on the order of once in 100 years, although such a flood may occur in any given year. Communities are occasionally audited by the Department of Water Resources to insure the proper implementation of FEMA floodplain management regulations.

California Water Code

The Federal Clean Water Act places the primary responsibility for the control of surface water pollution and for planning the development and use of water resources with the States, although this does establish certain guidelines for the States to follow in developing their programs and allows the Environmental Protection Agency to withdraw control from states with inadequate implementation mechanisms.

California's primary statute governing water quality and water pollution issues with respect to both surface waters and groundwater is the Porter-Cologne Water Quality Control Act of 1970 (Division 7 of the California Water Code) (Porter-Cologne Act). The Porter-Cologne Act grants the State Water Resource Control Board (SWRCB) and each of the RWQCBs power to protect water quality, and is the primary vehicle for implementation of California's responsibilities under the Federal Clean Water Act. The Porter-Cologne Act grants the SWRCB and the RWQCBs authority and responsibility to adopt plans and policies, to regulate discharges to surface and groundwater, to regulate waste disposal sites and to require cleanup of discharges of hazardous materials and other pollutants. The Porter-Cologne Act also establishes reporting requirements for unintended discharges of any hazardous substance, sewage, or oil or petroleum product.

Each RWQCB must formulate and adopt a water quality control plan (Basin Plan) for its region the regional plans are to conform to the policies set forth in the Porter-Cologne Act and established by the SWRCB in its State water policy. The Porter-Cologne Act also provides that a RWQCB may include within its regional plan water discharge prohibitions applicable to particular conditions, areas, or types of waste.

The Water Code Section 13260 requires all dischargers of waste that may affect water quality in waters of the state to prepare and provide a water quality discharge report to the RWQCB. Section 13260a-c is as follows:

(a) Each of the following persons shall file with the appropriate regional board a report of the discharge, containing the information that may be required by the regional board:

(1) A person discharging waste, or proposing to discharge waste, within any region that could affect the quality of the waters of the state, other than into a community sewer system.

(2) A person who is a citizen, domiciliary, or political agency or entity of this state discharging waste, or proposing to discharge waste, outside the boundaries of the state in a manner that could affect the quality of the waters of the state within any region.

(3) A person operating, or proposing to construct, an injection well.

(b) No report of waste discharge need be filed pursuant to subdivision (a) if the requirement is waived pursuant to Section 13269.

(c) Each person subject to subdivision (a) shall file with the appropriate regional board a report of waste discharge relative to any material change or proposed change in the character, location, or volume of the discharge.

National Pollutant Discharge Elimination System

National Pollutant Discharge Elimination System (NPDES) permits are required for discharges of pollutants to navigable waters of the United States, which includes any discharge to surface waters, including lakes, rivers, streams, bays, the ocean, dry stream beds, wetlands, and storm sewers that are tributary to any surface water body. NPDES permits are issued under the Federal Clean Water Act, Title IV, Permits and Licenses, Section 402 (33 USC 466 et seq.)

The LARWQCB issues these permits in lieu of direct issuance by the Environmental Protection Agency, subject to review and approval by the Environmental Protection Agency Regional Administrator. The terms of these NPDES permits implement pertinent provisions of the Federal Clean Water Act and the Act's implementing regulations, including pre-treatment, sludge management, effluent limitations for specific industries, and anti- degradation. In general, the discharge of pollutants is to be eliminated or reduced as much as practicable so as to achieve the Clean Water Act's goal of "fishable and swimmable" navigable (surface) waters. Technically, all NPDES permits issued by the LARWQCB are also Waste Discharge Requirements issued under the authority of the CWA.

Point sources are discrete conveyances such as pipes or man-made ditches. Industrial, municipal, and other similar facilities must obtain permits if their discharges go directly to surface waters. The NPDES permit program is administered by the LARWQCB. Polluted stormwater run-off is commonly transported through MS4s. This run-off is often untreated and discharged into local water bodies. To prevent harmful pollutants from being washed or dumped into an MS4, if tenants perform industrial activities in these facilities, they must obtain coverage under the Industrial General permit and develop a stormwater management program. Industrial uses involving 10,000 square feet or more are subject to the Los Angeles NPDES Permit requirements (Permit No. CAS004001, Order No. R4-2012-0175, as amended by WQ 2015-0075) and develop a stormwater management program. Phase I of the stormwater management program requires medium and large cities, or certain counties with populations of 100,000 or more to obtain NPDES permit coverage for their stormwater discharges. Phase II requires regulated small MS4s in urbanized areas, as well as small MS4s outside the urbanized areas that are designated by the permitting authority, to obtain NPDES permit coverage for their stormwater discharges. Generally, Phase I MS4s are covered by individual permits and Phase II MS4s are covered by a general permit. Each regulated MS4 is required to develop and implement a stormwater management program (SWMP) to reduce the contamination of stormwater run-off and prohibit illicit discharges.

Assembly Bill 3030 - Groundwater Management Act

In 1992, the State Legislature provided for more formal groundwater management with the passage of Assembly Bill (AB) 3030, the Groundwater Management Act (Water Code Section 10750, et seq.). Groundwater management, as defined in DWR's Bulletin 118 Update 2003, is the planned and coordinated monitoring, operation, and administration of a groundwater basin, or portion of a basin, with the goal of long-term groundwater resource sustainability. Groundwater management needs are generally identified and addressed at the local level in the form of Groundwater Management Plans (GMP). The Act provides local water agencies with procedures to develop a GMP to enable those agencies to manage their groundwater resources efficiently and safely while protecting the quality of supplies. Under the Act, development of a GMP by a local water agency is voluntary.

Sustainable Groundwater Management Act

The Sustainable Groundwater Management Act (SGMA) established a framework for sustainable, local groundwater management. SGMA requires groundwater-dependent regions to halt overdraft and bring basins into balanced levels of pumping and recharge. With passage of the SGMA, the Department of Water Resources launched the Sustainable Groundwater Management (SGM) Program to implement the law and provide ongoing support to local agencies around the state. The SGMA defines "sustainable groundwater management" and requires that a Groundwater Sustainability Plan be adopted for the most important groundwater basins in California as a means to empower local agencies to manage basins sustainably. The SGMA establishes basic requirements for the Groundwater Sustainability Plans as well as a timetable for the adoption of the plans.

Main San Gabriel Basin Watermaster

The Main San Gabriel Basin Watermaster (Watermaster) is an agency charged with administering adjudicated water rights and devoted to the management and protection of groundwater resources within the watershed and Main San Gabriel Groundwater Basin. The Watermaster consists of a nine-person board appointed by the Los Angeles County Superior Court that Manages and controls the withdrawal and replenishment of water supplies in the Main San Gabriel Groundwater Basin. The Watermaster determines the annual Operating Safe Yield for the succeeding fiscal year. The Watermaster operates under a formal set of Rules and Regulations, which define the procedures by which Watermaster-controlled activities are to be carried out. Under the Rules and Regulations, water producers in the Basin must obtain a Watermaster approval for activities such as:

- Constructing or modifying a well;
- Constructing a groundwater treatment plant;
- Increasing groundwater extraction;
- Spreading water in the Basin; and
- Spreading and storing supplemental water under a cyclic storage agreement.

To assure that groundwater pumping does not lead to further degradation of water quality in the Main San Gabriel Basin, the Main San Gabriel Basin Watermaster annually updates a Five-Year Water Quality and Supply Plan. The objective of the Five-Year Water Quality and Supply Plan is to coordinate groundwater-related activities so that both water supply and water quality in the Main San Gabriel Basin (Basin) are protected and improved. The plan includes the Main San Gabriel Basin Watermaster's plan for:

- Monitoring groundwater supply and quality;
- Developing projections of future groundwater supply and quality;
- Ensuring adequate supplemental water is available for groundwater replenishment;
- Reviewing and cooperating on cleanup projects, and providing technical assistance to other agencies;
- Assuring that pumping does not lead to further degradation of water quality in the Basin;
- Addressing emerging contaminants in the Basin;
- Developing a cleanup and water supply program consistent with the U.S. Environmental Protection Agency plans for its San Gabriel Basin Superfund sites; and
- Continue to perform responsibilities under the Baldwin Park Operable Unit (BPOU) Project Agreement relating to project administration and performance evaluation.

In addition to the Rules and Regulations and the Five-Year Water Quality and Supply Plan, the Main San Gabriel Basin Watermaster also prepares and maintains a Resource Development Assessment Report, 3-Year Water Supply Plan, Annual Watermaster Reports, and a Salt and Nutrient Management Plan.

Water Quality Control Plan for the Los Angeles Region

The Water Quality Control Plan for the Los Angeles Region, also known as the Basin Plan for the Coastal Watersheds of Los Angeles and Ventura Counties (Basin Plan), includes a summary of

beneficial water uses, water quality objectives needed to protect the identified beneficial uses, and implementation measures. The Basin Plan establishes water quality standards for all the ground and surface waters of the region. The term "water quality standards," as used in the Federal Clean Water Act, includes both the beneficial uses of specific water bodies and the levels of quality that must be met and maintained to protect those uses. The Basin Plan includes an implementation plan describing the actions by the RWQCB and others that are necessary to achieve and maintain the water quality standards.

The RWQCB regulates waste discharges to minimize and control their effects on the quality of the region's ground and surface water. Permits are issued under a number of programs and authorities. The terms and conditions of these discharge permits are enforced through a variety of technical, administrative, and legal means. Water quality problems in the region are listed in the Basin Plan, along with the causes, where they are known. For water bodies with quality below the levels necessary to allow all the beneficial uses of the water to be met, plans for improving water quality are included. The Basin Plan reflects, incorporates, and implements applicable portions of a number of national and statewide water quality plans and policies, including the California Water Code and the Clean Water Act.

LOCAL

City of Irwindale NPDES Permit

The City relies on regulations established by the State Department of Water Resources (DWR), the SWRCB, and the Los Angeles RWQCB for ordinances and codes related to water quality and water rights regulation.

The City is a co-permittee under the NPDES MS4 Permit No. CAS 004001 (Order RA -2012- 0175), adopted in 2012. The NPDES MS4 permit is intended to regulate the discharge of urban runoff from the MS4 within Los Angeles County. Under the NPDES MS4 permit, the City is responsible for the management of storm drain systems within its jurisdiction. Cities are required to implement management programs, monitoring programs, implementation plans, and all applicable BMPs outlined in the Los Angeles County NPDES MS4 permit.

The NPDES permit requires implementation of a Standard Urban Stormwater Mitigation Plan (SUSMP) for all designated projects. The proposed project is an industrial development with 10,000 square feet or more of surface area. Therefore, the proposed development is subject to the Los Angeles County Department of Public Works (LACDPW) SUSMP requirements under the "New Development – Industrial Parks" category and will be required to implement specific source control and stormwater quality control measures.

City of Irwindale General Plan

INFRASTRUCTURE ELEMENT

- **Policy 1.** The City will continue to support the efforts of the City of Irwindale Public Works Department in maintaining the highest level of service standards feasible.
- **Policy 2.** The City will continue to cooperate with those utility providers in the City to ensure that sufficient infrastructure capacity is available to meet current and future service demands.
- **Policy 4.** The City of Irwindale will strive to ensure that new development implements its "fair-share" of improvements to offset the potential adverse impacts associated with the additional traffic that will be generated by the new development.

RESOURCE MANAGEMENT ELEMENT

- **Policy 1. The** City of Irwindale will continue to work with the quarries and other regulatory agencies to facilitate their reclamation.
- **Policy 4.** The City of Irwindale will continue to protect the use of the area's resources through appropriate land use controls and planning.
- **Policy 6.** The City Irwindale will evaluate the feasibility of expanded joint-use of the open space lands used for flood control.
- **Policy 9.** The City of Irwindale will continue to cooperate with the other agencies that are charged with improving air and water quality in the region.

City of Irwindale Municipal Code

The City of Irwindale's Municipal Code (Code) addresses a variety of hydrology and water quality related topics. Chapter 8.28 of the Code (Storm Water and Urban Runoff Pollution) was adopted pursuant to the Federal Water Pollution Control Act and is to protect and improve water quality of receiving waters by:

- Reducing illicit discharges to the municipal storm water system to the maximum extent practicable.
- Eliminating illicit connections to the municipal storm water system.
- Eliminating spillage, dumping, and disposal of pollutant materials into the municipal storm water system.
- Reducing pollutant loads in storm water and urban.

Chapter 13.04 of the Code is the Sanitary Sewer and Industrial Waste Ordinance, which regulates the discharge, deposit and disposal of all waste, including any material which may cause pollution of underground or surface waters, in, upon or affecting the City; the design, construction, alteration, use and maintenance of public sewers and house laterals, industrial connection sewers, water pollution control plants, sewage pumping plants, industrial liquid-waste pretreatment plants, dairy screen-chambers, sand and grease interceptors, and appurtenances; the issuance of permits and the collection of fees therefore, and fees to pay the cost of checking plans, inspecting the construction and making record plans of the facilities permitted.

Chapter 15.04 of the Code (Building Code) adopts the Los Angeles County Building Code, 2017 Edition (Title 26 of the Los Angeles County Code), which incorporates and amends the 2016 California Building Code, including all appendixes thereto and changes made by the county of Los Angeles and by the City of Irwindale, as the City of Irwindale's building code. The building code regulates and controls the design, construction, quality of materials, grading, use, occupancy, location and maintenance of all buildings or structures and prescribing conditions under which such work may be carried on within the city and providing for the issuance of permits and the collection of fees therefor.

3.6.3 IMPACTS AND MITIGATION MEASURES

THRESHOLDS OF SIGNIFICANCE

Consistent with Appendix G of the CEQA Guidelines, the proposed Project will have a significant impact on the environment associated with hydrology and water quality if it will:

- Violate any water quality standards or waste discharge requirements or otherwise substantially degrade surface or ground water quality;
- Substantially deplete groundwater supplies or interfere substantially with groundwater recharge such that the Project may impede sustainable groundwater management of the basin;
- Substantially alter the existing drainage pattern of the site or area, including through the alteration of the course of a stream or river, in a manner that would:
    - Result in substantial erosion or siltation on- or off-site;
    - Substantially increase the rate or amount of surface runoff in a manner that would result in flooding on- or off-site;
    - Create or contribute runoff water which would exceed the capacity of existing or planned stormwater drainage systems or provide substantial additional sources of polluted runoff
    - Impede or redirect flood flows;
- In flood hazard, tsunami, or seiche zones, risk release of pollutants due to Project inundation;
- Conflict with or obstruct implementation of a water quality control plan or sustainable groundwater management plan.

IMPACTS AND MITIGATION

Impact 3.6-1: The proposed Project has the potential to violate water quality standards or waste discharge requirements or otherwise substantially degrade surface or ground water quality. (Less than Significant)

Grading, excavation, removal of vegetation cover, and loading activities associated with construction activities could temporarily increase runoff, erosion, and sedimentation. Construction activities also could result in soil compaction and wind erosion effects that could adversely affect

soils and reduce the revegetation potential at construction sites and staging areas. To ensure Project construction activities are covered under General Permit 2009-0009-DWQ (amended by 2010-0014-DWQ & 2012-0006-DWQ), the Project would be required to prepare a Stormwater Pollution Prevention Plan (SWPPP) containing Best Management Practices (BMPs) to reduce erosion and sediments to meet water quality standards. Such BMPs may include: temporary erosion control measures such as silt fences, staked straw bales/wattles, silt/sediment basins and traps, check dams, geofabric, sandbag dikes, and temporary revegetation or other ground cover. The BMPs and overall SWPPP is reviewed by the Regional Water Quality Control Board as part of the permitting process. The SWPPP, once approved, is kept on site and implemented during construction activities and must be made available upon request to representatives of the RWQCB and/or the lead agency. Upon completion of the project, the applicant would be required to submit a Notice of Termination to the State Regional Water Quality Control Board to indicate that construction is completed. Mandatory compliance with the SWPPP would ensure that the proposed Project would not violate any water quality standards or waste discharge requirements during construction activities. Therefore, water quality impacts associated with construction activities would be less than significant.

The long-term operations of the proposed Project (all phases) could result in long-term impacts to surface water quality from urban stormwater runoff. The proposed Project would result in increased impervious area at the site as a result of the proposed development. Normal activities in these developed areas include the use of various automotive petroleum products (i.e. oil, grease, and fuel), common household hazardous materials, heavy metals, pesticides, herbicides, fertilizers, and sediment. Within urban areas, these pollutants are generally called nonpoint source pollutants. The pollutant levels vary based on factors such as time between storm events, volume of storm event, type of uses, and density of people.

The Project site consists of two drainage sub-areas, 1A (12.83 acres) and 2A (12.62 acres), which roughly bisect the site. The onsite runoff will be conveyed via curb gutter, ribbon gutter, downspouts and sheet flow into proposed catch basins with filter inserts then routed via storm drain pipes to a proposed underground infiltration/detention system. The underground infiltration system will be utilized as a combination of stormwater treatment/storage and on-site detention system. Any excess flow would be routed off-site via a 30-inch storm drain pipe prior to ultimately discharging to an existing 90-inch storm drain pipe which is owned and maintained by the Los Angeles County Flood Control District.

In order to meet the City of Irwindale and County of Los Angeles storm water quality requirements, a combination of a rain garden and/or underground infiltration/detention system will be utilized as LID treatment devices to treat the low-flow. The underground infiltration/detention system will be located within an area (50-feet wide, eight-feet high, and 653-feet long) on the west side of the property. The rain garden areas will be located throughout the site, mainly around the perimeter. Within subarea 2A, the low flow will discharge into the LID treatment device rain garden via curb openings and then directed into the underground infiltration/detention system via infiltration. Subarea 1A will be directed to and treated by the proposed underground infiltration/detention system via underground storm drain pipe. The owner of the property will privately maintain the on-site drainage system, which would consist of catch basin, curb drains, and infiltration/detention

system. The proposed storm drains and infiltration/detention system has been designed to convey the required flow rates and will comply with the flood protection and storm water quality requirements of the City of Irwindale and County of Los Angeles. Thus, construction and operation of the proposed storm drain facilities would ensure that storm water would be conveyed and treated prior to outletting to the regional storm drain system, resulting in less than significant impacts to water quality.

Overall, implementation of the proposed Project would have a **less than significant** impact relative to this topic.

MITIGATION MEASURE(S)

Implement **Mitigation Measure Geo-1** (from Section VII, Geology and Soils, of the Initial Study) reproduced below as Mitigation Measure 3.6-1.

Mitigation Measure 3.6-1*: The project applicant shall submit a Notice of Intent (NOI) and Storm Water Pollution Prevention Plan (SWPPP) to the RWQCB in accordance with the NPDES General Construction Permit requirements. The SWPPP shall be designed to control pollutant discharges utilizing Best Management Practices (BMPs) and technology to reduce erosion and sediments. BMPs may consist of a wide variety of measures taken to reduce pollutants in stormwater runoff from the project site. Measures shall include temporary erosion control measures (such as silt fences, staked straw bales/wattles, silt/sediment basins and traps, check dams, geofabric, sandbag dikes, and temporary revegetation or other ground cover) that will be employed to control erosion from disturbed areas. Final selection of BMPs will be subject to approval by the City and the RWQCB. The SWPPP will be kept on site during construction* activity and will be made available upon request to representatives of the RWQCB and City.

Impact 3.6-2: The proposed Project has the potential to substantially deplete groundwater supplies or interfere substantially with groundwater recharge such that the project may impede sustainable groundwater management of the basin. (Less than Significant)

The proposed Project would result in new impervious surfaces and could reduce rainwater infiltration and groundwater recharge. The collection of rainwater for those areas of impervious surfaces will be routed into the proposed Project's storm drainage system, which includes an underground infiltration/detention system. The proposed rain garden area, landscape area and infiltration/detention system would allow for some infiltration of surface water into the groundwater. The Project site is not a significant source of groundwater for public water supplies.

Water resources in the City and throughout the San Gabriel Valley are sustained by substantial groundwater basins, which are used as reservoirs to store water during the wet years. These underground reservoirs are tapped throughout the year according to the demand of water. Groundwater conditions in these basins are influenced by natural hydrologic conditions such as percolation of precipitation, groundwater seepage, and ephemeral stream flow within the

watershed areas. The groundwater supplies are also augmented with recharged surface water purchased through the State Water Project.

As stated, the Project site is located within the MSGB, and will be provided water service by ALW. In accordance with the requirements of Section 28 of its Rules and Regulations, the MSGB Watermaster annually prepares and updates their Five-Year Water Quality and Supply Plan to summarize the MSGB Watermaster's plans to manage the MSGB and monitor the groundwater supply and quality. The Five-Year Water Quality and Supply Plan develops projections of future groundwater supply and quality and outlines how the MSGB Watermaster plans to maintain the Key Well elevation between 200 feet and 250 feet, to the extent possible. According to the MSGB Watermaster website, the groundwater level at Baldwin Park Key Well is at 209.4 feet as of February 28, 2020.

It is estimated that the proposed project would generate between 15 and 250 employees, which is estimated to require between 2,937 gallons per day (3.3 acre-feet per year [AFY]) and 48,950 gallons per day (approximately 54.9 AFY). According to the ALW's 2015 UWMP, ALW intends to focus its efforts on its existing water supply infrastructure in order to maximize its local supply capacity. ALW's supply reliability in the near future is expected to increase through continued upgrades to its groundwater facilities, expansion of the Joseph F. Hsu Filtration Plant), continued access to imported water, and the future potential use of recycled water. Therefore, ALW can expect to meet the needs of its customers through 2040 and as sufficient capacity to handle the increased water demand from the proposed Project.

Additionally, the Project site is also the general location of the former Irwindale Pit No. 1 (Manning Brothers Pit) Project. The City of Irwindale acquired the northern portion of the pit (approximately 37 acres) in the late 1980s from the County of Los Angeles, and the County retained the remainder (approximately 45 acres) which is currently used as a supplemental water recharge basin in conjunction with the Irwindale Recharge Basin, located just to the west. The recharge basin located south of the Project site will remain intact and will not be impacted by development of the proposed Project.

For the reasons mentioned above, the proposed Project would not cause the substantial depletion of groundwater supplies or interfere substantially with groundwater recharge such that the project may impede sustainable groundwater management of the basin. As such, implementation of the proposed Project would have a **less than significant** impact relative to this topic.

Impact 3.6-3: The proposed Project would not alter the existing drainage pattern of the site or area, including the alteration of the course of a river or through the addition of impervious surfaces, in a manner which would result in substantial erosion, siltation, surface runoff, flooding, or polluted runoff. (Less than Significant)

The proposed Project is in a developed urban area, in which no streams or rivers pass through the Project site. As such, there is no potential for the project to alter a watercourse, which could lead to on- or off-site flooding. Currently, the Project site retains all runoff on-site. The northerly portion of

the Project site, collects and conveys negligible runoff to an existing storm drain system owned by the City of Irwindale.

The proposed Project would alter the existing drainage of the Project site through grading and development of an industrial warehouse building and associated parking lot, as described in Chapter 2. Development of the proposed Project, when complete, would result in impervious surfaces and thus could result in an incremental reduction in the amount of natural soil surfaces available for infiltration of rainfall and runoff, thereby generating additional runoff during storm events. Additional runoff could contribute to increased erosion, siltation, and pollution, and increase in flood potential, or runoff that could exceed the capacity of the City's drainage system. However, as previously discussed, in order to meet the City of Irwindale and County of Los Angeles storm water quality requirements, biofiltration BMP will be utilized to meet low impact development (LID)/storm water quality requirements. Planned biofiltration BMPs include Measure BIO-1 (biofiltration) of the County of Los Angeles Department of Public Works LID Standards Manual (February 2014).

Any excess flow would be routed off-site via a 30-inch storm drain pipe prior to ultimately discharging to an existing 90-inch storm drain pipe which is owned and maintained by the Los Angeles County Flood Control District. The property owner will maintain the on-site drainage system, which would consist of catch basin, curb drains, and infiltration/detention system. The proposed storm drains and infiltration/detention system has been designed to convey the required flow rates and will comply with the flood protection and storm water quality requirements of the City of Irwindale and County of Los Angeles.

According to the Hydrology/LID Report prepared by West*LAND* Group (May 15, 2017), the proposed infiltration/detention system complies with the necessary retention/detention requirements of the City of Irwindale and County of Los Angeles. Additionally, the report concludes the proposed development runoff is designed to control outlet flow and poses no flood risk to neighboring properties. Therefore, implementation of the Project would not result in flooding on- or off-site or runoff water exceeding the capacity of existing or planned stormwater drainage systems.

Construction would include excavation and the overall disturbance of existing landscape, and would expose bare soil, and could temporarily alter drainage patterns with the potential to cause erosion and sedimentation. Adherence with statewide NPDES Construction General Permit and MS4 Permit construction requirements would ensure erosion or siltation does not occur onsite through implementation of erosion and sediment control BMPs during construction of the proposed Project. These requirements (see Mitigation Measure 3.6-1) would include the implementation of minimum BMPs, typical Source Control BMPs, and typical Treatment Control BMPs for erosion, sediment, non-storm water management and waste management. Adherence to the MS4 Permit and Construction General Permit conditions would ensure that potential water quality degradation associated with the construction of future development projects within the Project area would be minimized. With implementation of erosion and sediment control BMPs, as would be required by the appropriate permitting authorities and goals, policies, and implementation measures to reduce water quality impacts, construction-related impacts related to alteration of an existing drainage pattern that could result in substantial erosion or siltation on- or off-site from future development projects occurring under the proposed Project would be less than significant.

Additionally, planned urbanization of the Project site would result in changes to land use, natural vegetation, and infiltration characteristics, and would introduce new sources of water pollutants, producing "urban runoff." Pollutants contained within urban runoff may include, but are not limited to sediment, oxygen-demanding substances (e.g., organic matter), nutrients (primarily nitrogen and phosphorus), heavy metals, bacteria, oil and grease, and toxic chemicals that can degrade receiving waters. Urban runoff pollutants may stem from erosion of disturbed areas, deposition of atmospheric particles derived from automobile or industrial sources, corrosion or decay of building materials, rainfall contact with toxic substances, decomposing plant materials, animal excrement, and spills of toxic materials on surfaces which receive rainfall and generate runoff. New industrial development can generate urban runoff from parking areas, as well as any areas of hazardous materials storage exposed to rainfall.

In order to ensure that stormwater runoff from the Project site does not adversely increase pollutant levels in adjacent surface waters and stormwater conveyance infrastructure, or otherwise degrade water quality, Mitigation Measure 3.6-1 requires the preparation of a SWPPP, and structural BMPs. The SWPPP would require the application of BMPs to effectively reduce pollutants from stormwater leaving the site, which would ensure that stormwater runoff does not adversely increase pollutant levels, and would reduce the potential for disturbed soils and ground surfaces to result in erosion and sediment discharge into adjacent surface waters during construction and operational phases of the Project.

Additionally, proposed biofiltration systems use vegetation and soils or other filtration media to treat stormwater runoff. As stormwater runoff passes through the vegetation and the filtration media, the combined effects of filtration, adsorption, and biological uptake remove pollutants. In biofiltration systems, organic material in the soils retains water and promotes pollutant adsorption (i.e., dissolved metals, petroleum hydrocarbons) into the soil matrix. Plants use soil moisture, promote the drying of the soil through transpiration, and uptake pollutants in their roots and leaves. Plants with extensive root systems also help to maintain infiltration rates. Vegetation also decreases the velocity of flow and allows for particulates to settle. Biofiltration systems must be designed according to specifications outlined in the Biofiltration Fact Sheet (BIO-1) in Appendix E of the LID Standards Manual. Biofiltration systems with liners and underdrains will be located around the site perimeter, as well as proprietary high-flow devices that are approved for use by the County. An underground detention system will be required to mitigate peak flows, consistent with County requirements. The implementation of these requirements would reduce this impact to a less-than-significant level.

Compliance with these standards and regulations would ensure that erosion, siltation, and polluted runoff is minimized such that the Project would not result in substantial erosion, siltation, surface runoff, flooding, or polluted runoff and that the impact would be **less than significant**.

MITIGATION MEASURE(S)

Implement **Mitigation Measure Geo-1** (from Section VII, Geology and Soils, of the Initial Study) reproduced above as Mitigation Measure 3.6-1.

Impact 3.6-4 The proposed Project has the potential to, in a flood hazard, tsunami, or seiche zones, risk release of pollutants due to project inundation. (Less than Significant)

As shown on Figure 3.6-2, the Project site is not within a 100-year flood zone as delineated by FEMA. The Project site is not located within the 200-year floodplain as delineated on the most recent 200-year flood plain maps for Irwindale. Additionally, the Project site is not located in an area with the potential for tsunami inundation or within an area with a control levee.

The Santa Fe Dam Park Lake is a 20-acre lake and reservoir located approximately 0.9 miles northwest of the Project site. According to the Santa Fe Dam Basin Master Plan and Environmental Assessment, the Project site is outside of the basin boundaries and is not located in the dam inundation zone. However, as shown in Figure 3.6-3, the Project site is located within a dam inundation area for the San Gabriel No. 1 Dam. Due to the size of this dam, it is regulated by California Dam Safety Act, which is implemented by the California Department of Water Resources, Division of Safety of Dams (DSD). The DSD is responsible for inspecting and monitoring the dam in perpetuity. The proposed Project would not result in actions that could result in a higher likelihood of dam failure at the San Gabriel No. 1 Dam. There will always be a remote chance of dam failure that results in flooding of the City of Irwindale, including the Project site. However, given the regulations provided in the California Dam Safety Act, and the ongoing monitoring performed by the DSD, the risk of loss, injury, or death to people or structures from dam failure at the proposed Project site would be negligible, and no impact would result.

As a result, the proposed Project would have a **less-than-significant** impact relative to this topic.

Impact 3.5-The proposed Project has the potential to conflict with or obstruct implementation of a water quality control plan or sustainable groundwater management plan. (Less than Significant)

The Water Quality Control Plan for the Los Angeles Region and the MSGB Watermaster Five-Year Water Quality and Supply Plan are the two guiding documents for water quality and sustainable groundwater management in the Project area. Consistency with the two plans are discussed below.

WATER QUALITY CONTROL PLAN FOR THE LOS ANGELES REGION

The Water Quality Control Plan for the Los Angeles Region, also known as the Basin Plan for the Coastal Watersheds of Los Angeles and Ventura Counties (Basin Plan), includes a summary of beneficial water uses, water quality objectives needed to protect the identified beneficial uses, and implementation measures. The Basin Plan establishes water quality standards for all the ground and surface waters of the region. The term "water quality standards," as used in the Federal Clean Water Act, includes both the beneficial uses of specific water bodies and the levels of quality that must be met and maintained to protect those uses. The Basin Plan includes an implementation plan describing the actions by the RWQCB and others that are necessary to achieve and maintain the water quality standards.

The Project would include a combination of a rain garden and/or underground infiltration/detention systems utilized as LID treatment devices. The proposed storm drains and infiltration/detention system has been designed to convey the required flow rates and will comply with the flood protection and storm water quality requirements of the City of Irwindale and County of Los Angeles. As discussed in Impacts 3.6-1, impacts related to water quality during construction and operation would be less-than-significant with implementation of the Mitigation Measure 3.6-1. Mitigation Measure 3.6-1, requires the preparation of a SWPPP, and structural BMPs to effectively reduce pollutants from stormwater leaving the site, which would ensure that stormwater runoff does not adversely increase pollutant levels. The Project would also be subject to the applicable water quality regulations, including but not limited to Chapter 8.28 of the Irwindale Municipal Code (*Storm Water and Urban Runoff Pollution*), which was adopted pursuant to the Federal Water Pollution Control Act and is to protect and improve water quality of receiving waters.

MSGB WATERMASTER FIVE-YEAR WATER QUALITY AND SUPPLY PLAN

The MSGB Watermaster Five-Year Water Quality and Supply Plan is prepared and updated annually to coordinate groundwater-related activities so that both water supply and water quality in the MSGB are protected and improved. As discussed in Impact 3.6-2, the Project would not decrease groundwater supplies or interfere substantially with groundwater recharge such that the Project may impede sustainable groundwater management of the basin. It is estimated that the proposed project would require between 2,937 gallons per day (3.3 acre-feet per year [AFY]) and 48,950 gallons per day (approximately 54.9 AFY). Based on the current capacity of ALW's supply infrastructure, ALW can expect to meet the needs of its customers through 2040. Furthermore, the groundwater level at Baldwin Park Key Well is at 209.4 feet as of February 28, 2020, which is between the 200 feet and 250 feet elevation that MSGB Watermaster strives to maintain.

Additionally, Mitigation Measure 3.6-1 requires the preparation of a SWPPP, and structural BMPs. The SWPPP would require the application of BMPs to effectively reduce pollutants from stormwater leaving the site, which would ensure that stormwater runoff does not adversely increase pollutant levels, and would reduce the potential for disturbed soils and ground surfaces to result in erosion and sediment discharge into adjacent surface waters during construction and operational phases of the Project. The Project would also be subject to the applicable water quality regulations, including but not limited to Chapter 8.28 of the Irwindale Municipal Code (*Storm Water and Urban Runoff Pollution*), which was adopted pursuant to the Federal Water Pollution Control Act and is to protect and improve water quality of receiving waters.

CONCLUSION

Overall, implementation of the proposed Project and adherence to the requirements of Mitigation Measures 3.6-1 would have **a less than significant** impact related to conflicts with the Basin Plan and Five-Year WQSP.

This page intentionally left blank.

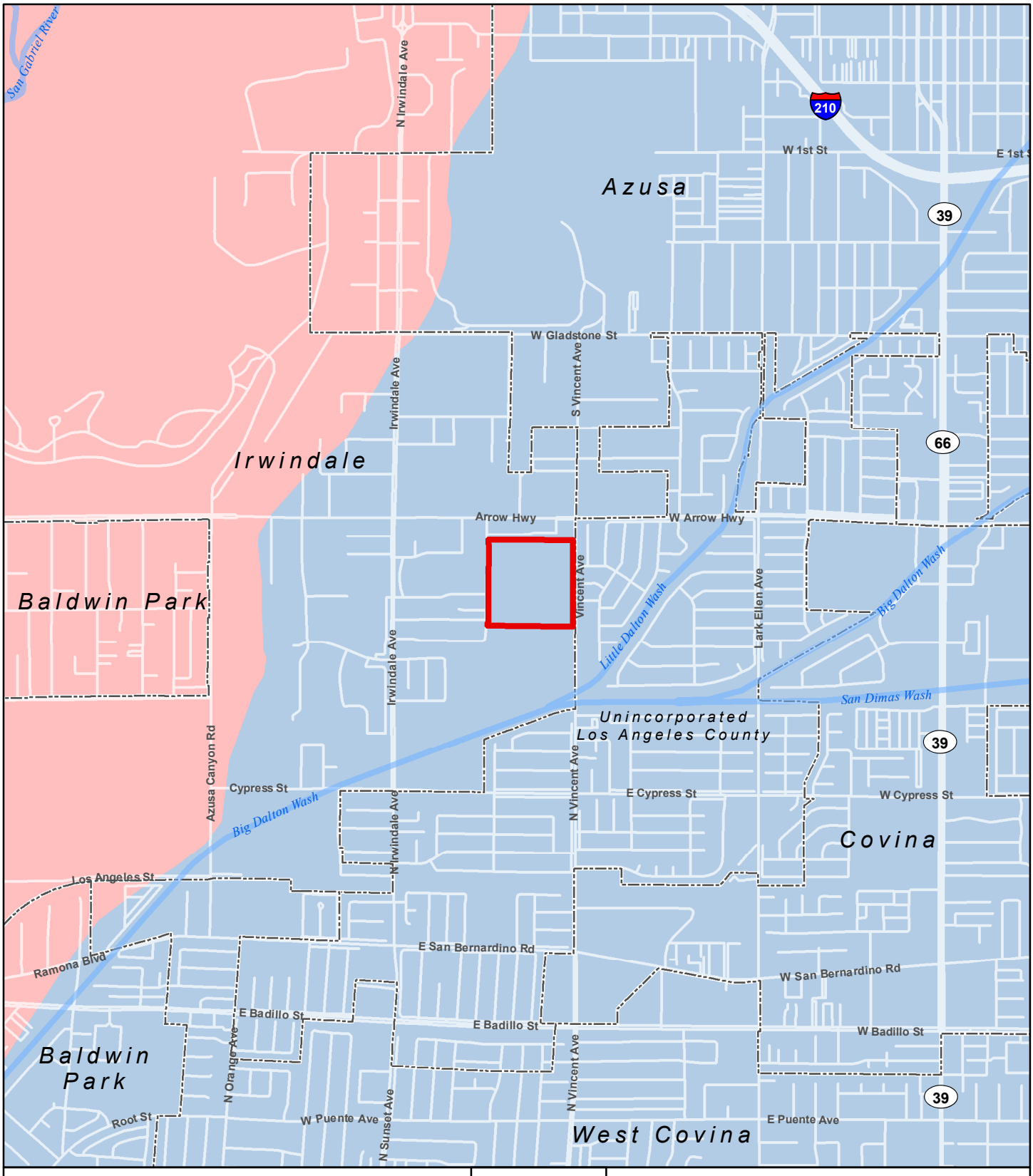

Legend

- Project Boundary
- City Boundary

USGS Primary Watershed

- Lower San Gabriel River
- Walnut Creek

N

0 600 1,200

Feet

CITY OF IRWINDALE
SWC VINCENT AVENUE AND ARROW HIGHWAY

Figure 3.6-1. Principal Watershed

Source: USGS Watershed Boundary Dataset; Los Angeles County EGIS. Map date: February 25, 2020.

De Novo Planning Group
A Land Use Planning, Design, and Environmental Firm

This page intentionally left blank.

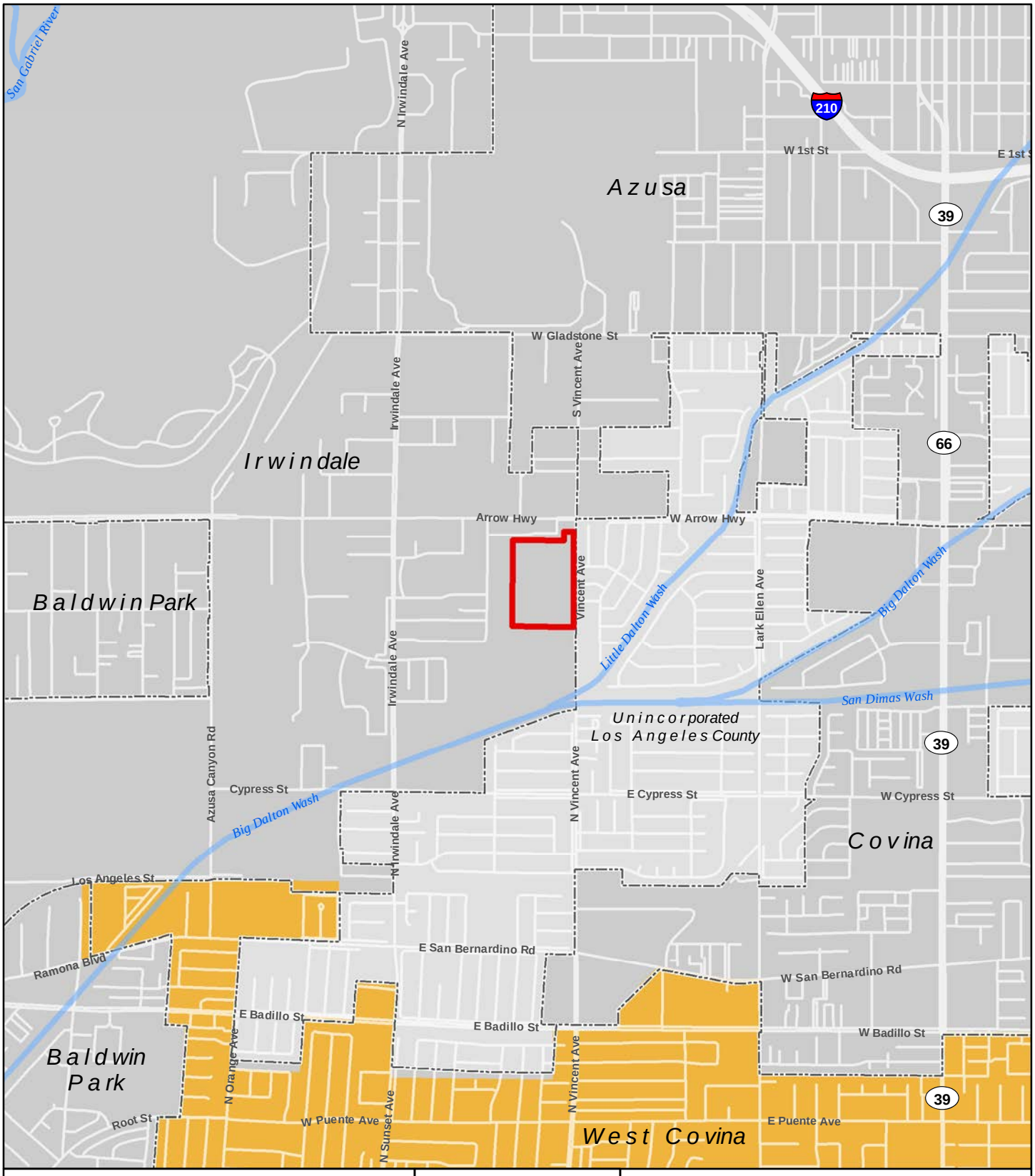

Legend

Project Boundary

City Area

FEMA Flood Zone Designation

2% Annual Chance Flood Hazard (500-Year Flood Plain)

0 600 1,200

Feet

Source: Los Angeles County EGIS. FEMA NFHL_06037C, effective date 4/4/18Map date: May 8, 2018. Revised 5/15/18.

CITY OF IRWINDALE
5175 VINCENT AVENUE

Figure 11. FEMA Flood Insurance Rate Map

De Novo Planning Group
A Land Use Planning, Design, and Environmental Firm

This page intentionally left blank.

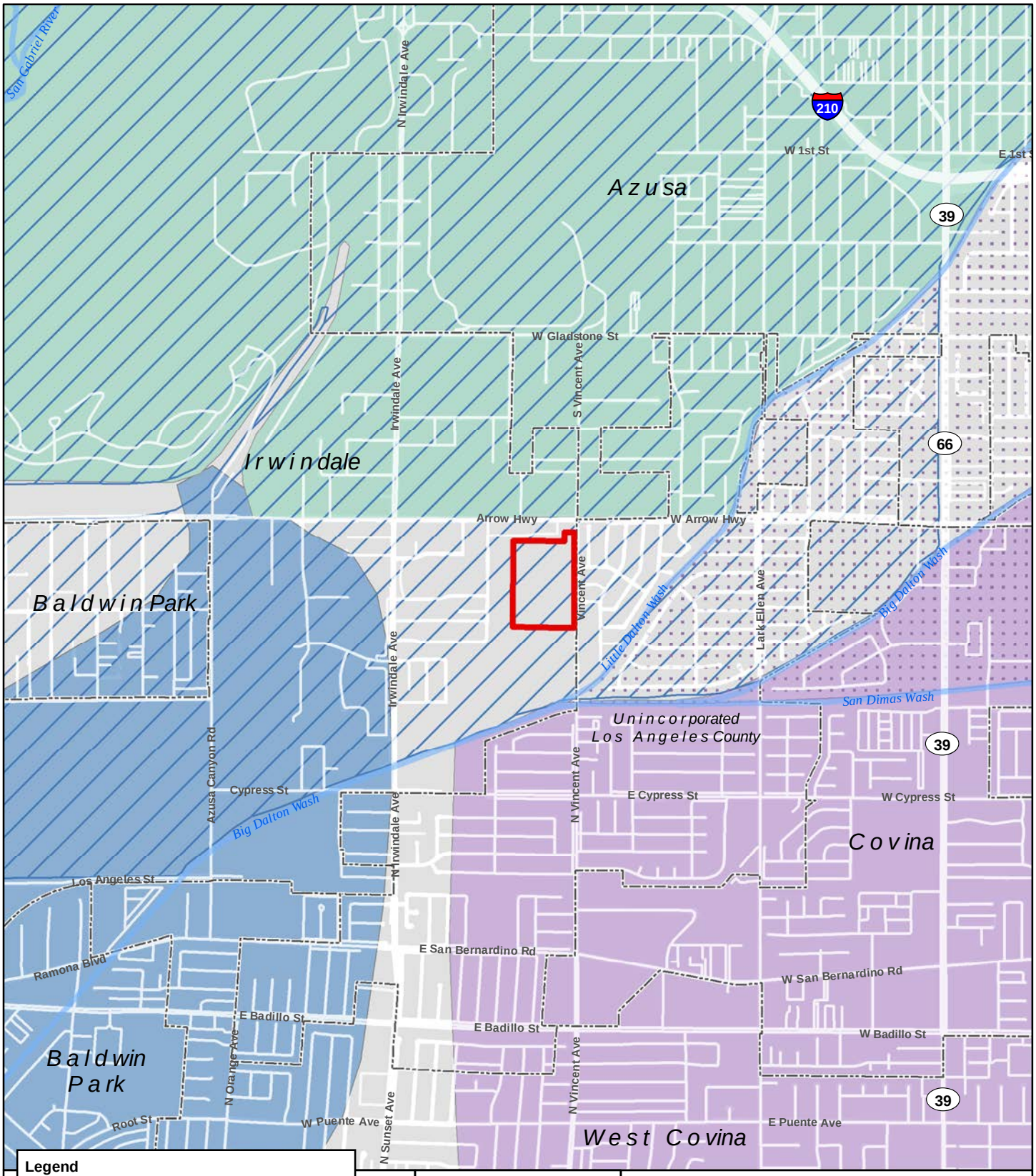

Source: Governor's Office of Emergency Services Statewide Dam Inundation Map Service, accessed 5/8/2018.; Los Angeles County EGIS. Map date: May 8, 2018. Revised 5/15/2018.

CITY OF IRWINDALE
5175 VINCENT AVENUE

Figure 12. Dam Inundation Map

De Novo Planning Group
A Land Use Planning, Design, and Environmental Firm

This page intentionally left blank.

This section provides a general description of the existing noise sources in the Project vicinity, a discussion of the regulatory setting, and identifies potential noise impacts associated with the proposed Project. Project impacts are evaluated relative to applicable noise level criteria and to the existing ambient noise environment. Mitigation measures have been identified for significant noise-related impacts. Information in this section is based on the Environmental Noise Assessment completed for the Project (Saxelby Acoustics, 2020).

One comment was received during the scoping meeting for the Notice of Preparation regarding this topic from Edward and Margaret Curren (February 20, 2020). The portion of the comment related to this topic is addressed within this section. Full comments received are included in Appendix A.

As discussed in in the Initial Study prepared for the proposed Project, the Project has been determined to not be located within the vicinity of a private airstrip or an airport land use plan or, where such a plan has not been adopted, within two miles of a public airport or public use airport. The closest airport is the El Monte Airport approximately six miles southwest of the Project site. As such, there is no impact related to this topic and this California Environmental Quality Act (CEQA) topic will not be further discussed. The Initial Study is included in Appendix A of this Draft EIR.

3.7.1 ENVIRONMENTAL SETTING

KEY TERMS

Acoustics	The science of sound.
Ambient Noise	The distinctive acoustical characteristics of a given area consisting of all noise sources audible at that location. In many cases, the term ambient is used to describe an existing or pre-project condition such as the setting in an environmental noise study.
Attenuation	The reduction of noise.
A-Weighting	A frequency-response adjustment of a sound level meter that conditions the output signal to approximate human response.
Decibel or dB	Fundamental unit of sound, defined as ten times the logarithm of the ratio of the sound pressure squared over the reference pressure squared.
CNEL	Community noise equivalent level. Defined as the 24-hour average noise level with noise occurring during evening hours (7 - 10 p.m.) weighted by a factor of three and nighttime hours weighted by a factor of 10 prior to averaging.
Frequency	The measure of the rapidity of alterations of a periodic acoustic signal, expressed in cycles per second or Hertz.
Impulsive	Sound of short duration, usually less than one second, with an abrupt onset and rapid decay.
L_{dn}	Day/Night Average Sound Level. Similar to CNEL but with no evening weighting.
L_{eq}	Equivalent or energy-averaged sound level.
L_{max}	The highest root-mean-square (RMS) sound level measured over a given period of time.

$L_{(n)}$	The sound level exceeded a described percentile over a measurement period. For instance, an hourly L_{50} is the sound level exceeded 50 percent of the time during the one hour period.
Loudness	A subjective term for the sensation of the magnitude of sound.
Noise	Unwanted sound.
SEL	Sound exposure levels. A rating, in decibels, of a discrete event, such as an aircraft flyover or train passby, that compresses the total sound energy into a one-second event.

FUNDAMENTALS OF ACOUSTICS

Acoustics is the science of sound. Sound may be thought of as mechanical energy of a vibrating object transmitted by pressure waves through a medium to human (or animal) ears. If the pressure variations occur frequently enough (at least 20 times per second), then they can be heard and are called sound. The number of pressure variations per second is called the frequency of sound, and is expressed as cycles per second or Hertz (Hz).

Noise is a subjective reaction to different types of sounds. Noise is typically defined as (airborne) sound that is loud, unpleasant, unexpected or undesired, and may therefore be classified as a more specific group of sounds. Perceptions of sound and noise are highly subjective from person to person.

Measuring sound directly in terms of pressure would require a very large and awkward range of numbers. To avoid this, the decibel scale was devised. The decibel scale uses the hearing threshold (20 micropascals), as a point of reference, defined as 0 dB. Other sound pressures are then compared to this reference pressure, and the logarithm is taken to keep the numbers in a practical range. The decibel scale allows a million-fold increase in pressure to be expressed as 120 dB, and changes in levels (dB) correspond closely to human perception of relative loudness.

The perceived loudness of sounds is dependent upon many factors, including sound pressure level and frequency content. However, within the usual range of environmental noise levels, perception of loudness is relatively predictable, and can be approximated by A-weighted sound levels. There is a strong correlation between A-weighted sound levels (expressed as dBA) and the way the human ear perceives sound. For this reason, the A-weighted sound level has become the standard tool of environmental noise assessment. All noise levels reported in this section are in terms of A-weighted levels, but are expressed as dB, unless otherwise noted.

The decibel scale is logarithmic, not linear. In other words, two sound levels 10 dB apart differ in acoustic energy by a factor of 10. When the standard logarithmic decibel is A-weighted, an increase of 10 dBA is generally perceived as a doubling in loudness. For example, a 70 dBA sound is half as loud as an 80 dBA sound, and twice as loud as a 60 dBA sound.

Community noise is commonly described in terms of the ambient noise level, which is defined as the all-encompassing noise level associated with a given environment. A common statistical tool to measure the ambient noise level is the average, or equivalent, sound level (L_{eq}), which corresponds

to a steady-state A weighted sound level containing the same total energy as a time varying signal over a given time period (usually one hour). The L_{eq} is the foundation of the composite noise descriptor, L_{dn}, and shows very good correlation with community response to noise.

The day/night average level (L_{dn}) is based upon the average noise level over a 24-hour day, with a +10 decibel weighting applied to noise occurring during nighttime (10:00 p.m. to 7:00 a.m.) hours. The nighttime penalty is based upon the assumption that people react to nighttime noise exposures as though they were twice as loud as daytime exposures. Because L_{dn} represents a 24-hour average, it tends to disguise short-term variations in the noise environment. CNEL is similar to L_{dn}, but includes a +5 dB penalty for evening noise. Table 3.7-1 lists several examples of the noise levels associated with common situations.

TABLE 3.7-1: TYPICAL NOISE LEVELS

COMMON OUTDOOR ACTIVITIES	*NOISE LEVEL (DBA)*	*COMMON INDOOR ACTIVITIES*
	--110--	Rock Band
Jet Fly-over at 300 m (1,000 ft)	--100--	
Gas Lawn Mower at 1 m (3 ft)	--90--	
Diesel Truck at 15 m (50 ft), at 80 km/hr (50 mph)	--80--	Food Blender at 1 m (3 ft) Garbage Disposal at 1 m (3 ft)
Noisy Urban Area, Daytime Gas Lawn Mower, 30 m (100 ft)	--70--	Vacuum Cleaner at 3 m (10 ft)
Commercial Area Heavy Traffic at 90 m (300 ft)	--60--	Normal Speech at 1 m (3 ft)
Quiet Urban Daytime	--50--	Large Business Office Dishwasher in Next Room
Quiet Urban Nighttime	--40--	Theater, Large Conference Room (Background)
Quiet Suburban Nighttime	--30--	Library
Quiet Rural Nighttime	--20--	Bedroom at Night, Concert Hall (Background)
	--10--	Broadcast/Recording Studio
Lowest Threshold of Human Hearing	--0--	Lowest Threshold of Human Hearing

SOURCE: CALTRANS, TECHNICAL NOISE SUPPLEMENT, TRAFFIC NOISE ANALYSIS PROTOCOL. SEPTEMBER 2013.

EFFECTS OF NOISE ON PEOPLE

The effects of noise on people can be placed in three categories:

- Subjective effects of annoyance, nuisance, and dissatisfaction;
- Interference with activities such as speech, sleep, and learning; and
- Physiological effects such as hearing loss or sudden startling.

Environmental noise typically produces effects in the first two categories. Workers in industrial plants can experience noise in the last category. There is no completely satisfactory way to measure the subjective effects of noise or the corresponding reactions of annoyance and dissatisfaction. A wide variation in individual thresholds of annoyance exists and different tolerances to noise tend to develop based on an individual's past experiences with noise.

Thus, an important way of predicting a human reaction to a new noise environment is the way it compares to the existing environment to which one has adapted: the so-called ambient noise level. In general, the more a new noise exceeds the previously existing ambient noise level, the less acceptable the new noise will be judged by those hearing it. With regard to increases in A-weighted noise level, the following relationships occur:

- Except in carefully controlled laboratory experiments, a 1 dBA change cannot be perceived;
- Outside of the laboratory, a 3 dBA change is considered a just-perceivable difference;
- A change in level of at least 5 dBA is required before any noticeable change in human response would be expected; and
- A 10 dBA change is subjectively heard as approximately a doubling in loudness, and can cause an adverse response.

Stationary point sources of noise – including stationary mobile sources such as idling vehicles – attenuate (lessen) at a rate of approximately 6 dB per doubling of distance from the source, depending on environmental conditions (i.e. atmospheric conditions and either vegetative or manufactured noise barriers, etc.). Widely distributed noises, such as a large industrial facility spread over many acres, or a street with moving vehicles, would typically attenuate at a lower rate.

GROUNDBORNE VIBRATION

Vibration is like noise in that it involves a source, a transmission path, and a receiver. While vibration is related to noise, it differs in that in that noise is generally considered to be pressure waves transmitted through air, whereas vibration usually consists of the excitation of a structure or surface. As with noise, vibration consists of an amplitude and frequency. A person's perception to the vibration will depend on their individual sensitivity to vibration, as well as the amplitude and frequency of the source and the response of the system which is vibrating.

Vibration can be measured in terms of acceleration, velocity, or displacement. A common practice is to monitor vibration measures in terms of peak particle velocities in inches per second. Standards pertaining to perception as well as damage to structures have been developed for vibration levels defined in terms of peak particle velocities (p.p.v.).

SENSITIVE RECEPTORS

Sensitive noise receptors within the area include residential uses located in the residential areas to the north (opposite Arrow Highway), south (along Bellbrook Street), east (opposite Vincent Avenue), and west (opposite Allen Drive) of the Project site.

EXISTING NOISE LEVELS

Existing and Surrounding Land Uses

In the vicinity of the Project site, surrounding land uses include existing residential and industrial uses. Residential uses are located to the east and west of the Project site along Vincent Avenue and Allen Drive. Industrial uses are located directly north of the Project site. Land to the south of the

Project site is occupied by an inactive quarry. Undeveloped land directly west of the Project site is currently zoned for future industrial use.

Existing Ambient Noise Levels

To quantify the existing ambient noise environment in the Project vicinity, continuous (24-hour) noise level measurements were conducted on the Project site on February 11 and 12, 2020. The noise measurement locations are shown on Figure 3.7-1. The noise level measurement survey results are provided in Table 3.7-2. Appendix B of Appendix C shows the complete results of the continuous noise monitoring at sites LT-1 through LT-4.

The sound level meters were programmed to collect hourly noise level intervals at each site during the survey. The maximum value (L_{max}) represents the highest noise level measured during an interval. The average value (L_{eq}) represents the energy average of all of the noise measured during an interval. The median value (L_{50}) represents the sound level exceeded 50 percent of the time during an interval.

TABLE 3.7-2: SUMMARY OF EXISTING BACKGROUND NOISE MEASUREMENT DATA

			AVERAGE MEASURED HOURLY NOISE LEVELS, DB					
			DAYTIME (7AM-10PM)			*NIGHTTIME (10PM-7AM)*		
SITE	*LOCATION*	L_{DN}	L_{EQ}	L_{50}	L_{MAX}	L_{EQ}	L_{50}	L_{MAX}
CONTINUOUS (24-HOUR) NOISE LEVEL MEASUREMENTS								
LT-1	Northeast corner of site	73.5	70.7	67.2	88.9	66.0	57.1	85.1
LT-2	Southeast corner of site	75.3	72.5	69.6	88.0	67.9	59.0	87.3
LT-3	Southwest corner of site	60.5	51.3	47.3	68.4	54.4	53.0	67.8
LT-4	Northwest corner of site	60.0	51.3	48.2	68.6	53.8	52.4	66.2

SOURCE: SAXELBY ACOUSTICS, 2020.

Larson Davis Laboratories (LDL) Model 812 and 820 precision integrating sound level meters were used for the ambient noise level measurement survey. The meters were calibrated before and after use with an LDL Model CAL200 acoustical calibrator to ensure the accuracy of the measurements. The equipment used meets all pertinent specifications of the American National Standards Institute for Type 1 sound level meters (ANSI S1.4).

Existing Roadway Noise Levels

To predict existing noise levels due to traffic, the Federal Highway Administration (FHWA) Highway Traffic Noise Prediction Model (FHWA RD-77-108) was used. The model is based upon the Calveno reference noise emission factors for automobiles, medium trucks, and heavy trucks, with consideration given to vehicle volume, speed, roadway configuration, distance to the receiver, and the acoustical characteristics of the site. The FHWA model was developed to predict hourly L_{eq} values for free-flowing traffic conditions. While the newer FHWA traffic noise model (TNM 3.0) is required for use on federally funded highway projects, the FHWA RD-77-108 model is still widely used in the industry and recognized as an accurate screening tool, typically resulting in slight over-predictions in traffic noise levels at typical receptor setback distances.

Traffic volumes for existing conditions were obtained from the traffic data prepared for the Project as part of the Traffic Impact Analysis (Ganddini Group Inc.). The traffic volumes are shown in Appendix C of Appendix C of the Draft EIR. Truck percentages and vehicle speeds on the local area roadways were estimated from field observations.

Traffic noise levels are predicted at the sensitive receptors located at the closest typical setback distance along each Project-area roadway segment. Where traffic noise barriers are predominately along a roadway segment, a -5 dB offset was added to the noise prediction model to account for various noise barrier heights. A -5 dB offset was also applied where outdoor activity areas are shielded by intervening buildings. In some locations, sensitive receptors may be located at distances which vary from the assumed calculation distance and may experience shielding from intervening barriers or sound walls. However, the traffic noise analysis is believed to be representative of the majority of sensitive receptors located closest to the Project-area roadway segments analyzed in this section.

Table 3.7-3 shows the existing traffic noise levels in terms of L_{dn} at closest sensitive receptors along each roadway segment. A complete listing of the FHWA Model input data is contained in Appendix B of Appendix C.

TABLE 3.7-3: EXISTING TRAFFIC NOISE LEVELS AND DISTANCES TO CONTOURS

ROADWAY	*SEGMENT*	*EXTERIOR TRAFFIC NOISE LEVEL, DB L_{DN}*
Arrow Hwy.	Maine Ave. to Azusa Canyon Rd.	65.9
Arrow Hwy.	Azusa Canyon Rd. to 4th St.	59.0
Arrow Hwy.	4th St. to Irwindale Ave.	70.7
Arrow Hwy.	Irwindale Ave. to Vincent Ave.	71.8
Arrow Hwy.	East of Vincent Ave.	73.0
Azusa Ave.	Paramount St. Gladstone St.	68.2
Cypress St.	West of Vincent Ave.	63.5
Cypress St.	East of Vincent Ave.	68.2
Gladstone St.	Vincent Ave. to Vernon Ave.	72.1
Gladstone St.	Vernon Ave. to Azusa Ave.	69.5
Irwindale Ave.	South of Arrow Hwy.	66.7
Vernon Ave.	North of Gladstone St.	66.1
Vincent Ave.	Gladstone St. to Arrow Hwy.	68.0
Vincent Ave.	Project North Driveway to Project South Driveway	69.8
Vincent Ave.	Project South Driveway to Cypress St.	70.5
Vincent Ave.	Project South Driveway to Cypress St.	70.6
Vincent Ave.	Cypress St. to San Bernardino Rd.	69.7
Vincent Ave.	San Bernardino to Badillo St.	50.4
Vincent Ave.	Badillo St. to Puente Ave.	70.5
Vincent Ave.	Puente Ave. to Rowland St.	71.2
Vincent Ave.	Rowland St. to Workman Ave.	71.4
Vincent Ave.	Workman Ave. to I-10 WB Ramps	69.9

SOURCE: FHWA-RD-77-108 WITH INPUTS FROM KUNZMAN ASSOCIATES, INC., AND SAXELBY ACOUSTICS, 2020.

Stationary Noise Sources

The Project vicinity consists of industrial, residential, recreational, and public facility uses. The primary sources of stationary noise in the Project vicinity are urban-related activities (e.g., heating, ventilation, and air conditioning units, parking areas, and conversations). The noise associated with these sources may represent a single-event or a continuous occurrence.

3.7.2 REGULATORY SETTING

FEDERAL

There are no federal regulations related to noise that apply to the proposed Project.

STATE

California Building Code

California Building Code (CBC), Title 24, Section 1207.11.2, *Allowable Interior Noise Levels*, requires that interior noise levels attributable to exterior sources not exceed 45 dBA in any habitable room. The noise metric is evaluated as either Ldn or CNEL, consistent with the noise element of the local general plan.

California Green Building Standards Code

The California Green Building Standards Code (CALGreen) has requirements for insulation that affect exterior-interior noise transmission for non-residential structures. Pursuant to CALGreen Section 5.507.4.1, *Exterior Noise Transmission*, an architectural acoustics study may be required when a project site is within a 65 dBA CNEL or Ldn noise contour of an airport, freeway or expressway, railroad, industrial source, or fixed-guideway source.

Where noise contours are not readily available, if buildings are exposed to a noise level of 65 dBA Leq during any hour of operation, specific wall and ceiling assembly and sound-rated windows may be necessary to reduce interior noise to acceptable levels. A performance method may also be used per CALGreen Section 5.507.4.2 to show compliance with State interior noise requirements.

LOCAL

City of Irwindale General Plan

The City of Irwindale 2020 General Plan – Public Safety Element establishes policies relative to the reduction and mitigation of natural and manmade hazards, such as noise, that must be considered in future planning and decision-making (City of Irwindale, 2008). The City's policies related to noise issues stress the importance of protecting residents from excessive noise and reducing the high levels of noise exposure associated with the existing development and transportation facilities in the City. Specific policies include:

- **Policy 5**. The City of Irwindale will work towards reducing noise exposure in the City by considering noise and land use compatibility in land use planning.
- **Policy 6**. The City of Irwindale will continue to investigate strategies that will be effective in reducing the community's exposure to harmful noise levels.

The City's General Plan recognizes the State Office of Noise Control's Guidelines for the Preparation and Content of Noise Elements of General Plans, which is a guide for compatibility of noise-sensitive land uses in areas subject to noise levels of 55 to 80 dBA CNEL or Ldn. In summary:

- **Residential uses** are *normally unacceptable* in areas exceeding 70 dBA CNEL; and *conditionally acceptable* between 55 and 70 dBA CNEL for low-density single-family dwelling units, duplexes, and mobile homes, and between 60 and 70 dBA CNEL for multiple-family units.
- **Schools, libraries, hospitals, and nursing homes** are treated as noise-sensitive land uses, requiring acoustical studies within areas exceeding 60 dBA CNEL.
- **Commercial/professional office buildings and industrial uses** are *normally unacceptable* in areas exceeding 75 dBA CNEL, and are *conditionally acceptable* within 67 to 78 dBA CNEL (for commercial and professional offices only).

Irwindale Municipal Code

The City of Irwindale regulates noise through enforcement of its noise ordinance, Irwindale Municipal Code (IMC) Chapter 9.28 Noise Regulation (City of Irwindale, 2009). Per IMC Section 9.28.030, if the ambient noise level is less than designated in Table 3.7-4 City of Irwindale Ambient Base Noise Levels, the ambient base noise level in Table 3.7-4 shall govern.

TABLE 3.7-4 CITY OF IRWINDALE AMBIENT BASE NOISE LEVELS

ZONE	*10 P.M. TO 7 A.M.*	*7 A.M. TO 10 P.M.*
Residential	45 dBA	50 dBA
Commercial	50 dBA	55 dBA
Industrial	60 dBA	70 dBA

SOURCE: IRWINDALE MUNICIPAL CODE, CHAPTER 9.28.030.

Per IMC Section 9.28.040, it is unlawful for any person to willfully make or continue, or cause to be made or continued any noise at a level which exceeds by more than five dBA the ambient or the ambient base level as set forth in Section 9.28.030, whichever is greater, when measured at any boundary line of the property from which the noise emanates.

IMC Section 9.28.110 states it is unlawful for any person within a residential zone, or within a radius of five hundred feet therefrom, to operate equipment or perform any outside construction or repair work on buildings, structures, or projects or to operate any pile driver, steam shovel, pneumatic hammer, derrick, steam or electric hoist or other construction type device on a development requiring a city permit, in such a manner that noise is produced which would exceed the ambient or the ambient base noise level by more than five (5) dBA when measured at any boundary line of the property from which the noise emanates, unless beforehand authorization

therefore has been duly obtained from the building inspector. Such activity is unlawful without a permit during all hours on Sunday. All construction governed by this Section of the IMC is limited to occur between seven (7) a.m. and seven (7) p.m.

IMC Section 9.28.230 Exclusions to chapter applicability, states the provisions of this chapter shall not apply to:

A. Sound produced by motor vehicles as regulated by sound limitation provisions of the California Vehicle Code when such vehicle is located or operated on any public street, right-of-way or highway;
B. Aircraft operated in conformity with federal law;
C. Public and private schools, organized activities including sports, carnivals, assemblies and other regular activities;
D. Construction, operation, maintenance and repairs of equipment, apparatus or facilities of park and recreation departments, public works projects or essential public services and facilities, including those of public utilities subject to the regulatory jurisdiction of the California Public Utilities Commission;
E. Activities of the federal, state or local government;
F. Any noise continuing for less than thirty seconds at intervals greater than once in three hours.

VIBRATION STANDARDS

The City of Irwindale does not have specific policies pertaining to vibration levels. However, vibration levels associated with construction activities are addressed as potential noise impacts associated with Project implementation.

Human and structural response to different vibration levels is influenced by a number of factors, including ground type, distance between source and receptor, duration, and the number of perceived vibration events. Table 3.7-5 indicates that the threshold for damage to structures ranges from 0.2 to 0.6 p.p.v. in inches per second (in/sec p.p.v). A threshold of 0.20 in/sec p.p.v. is considered to be a reasonable threshold for short-term construction projects.

TABLE 3.7-5: EFFECTS OF VIBRATION ON PEOPLE AND BUILDINGS

PEAK PARTICLE VELOCITY		HUMAN REACTION	EFFECT ON BUILDINGS
MM/SEC.	IN./SEC.		
0.15-0.30	0.006-0.019	Threshold of perception; possibility of intrusion	Vibrations unlikely to cause damage of any type
2.0	0.08	Vibrations readily perceptible	Recommended upper level of the vibration to which ruins and ancient monuments should be subjected
2.5	0.10	Level at which continuous vibrations begin to annoy people	Virtually no risk of "architectural" damage to normal buildings
5.0	0.20	Vibrations annoying to people in buildings (this agrees with the levels established for people standing on bridges and subjected to relative short periods of vibrations)	Threshold at which there is a risk of "architectural" damage to normal dwelling - houses with plastered walls and ceilings. Special types of finish such as lining of walls, flexible ceiling treatment, etc., would minimize "architectural" damage
10-15	0.4-0.6	Vibrations considered unpleasant by people subjected to continuous vibrations and unacceptable to some people walking on bridges	Vibrations at a greater level than normally expected from traffic, but would cause "architectural" damage and possibly minor structural damage.

SOURCE: CALTRANS. TRANSPORTATION RELATED EARTHBORN VIBRATIONS. TAV-02-01-R9601 FEBRUARY 20, 2002.

3.7.3 IMPACTS AND MITIGATION MEASURES

THRESHOLDS OF SIGNIFICANCE

Consistent with Appendix G of the CEQA Guidelines, the Project will have a significant impact related to noise if it will result in:

- Generation of a temporary or permanent increase in ambient noise levels in the vicinity of the Project in excess of standards established in the local general plan or noise ordinance, or applicable standards of other agencies; and/or
- Generation of excessive groundborne vibration or groundborne noise levels.

Determination of a Significant Increase in Noise Levels

TEMPORARY IMPACTS

With temporary noise impacts (construction), identification of "substantial increases" depends upon the duration of the impact, the temporal daily nature of the impact, and the absolute change in decibel levels. Per the City of Irwindale noise ordinance, if construction activities are within 500 feet of a residential zone, construction activities exceeding 75 dBA ambient base noise levels between 7 a.m. and 7 p.m. at the property boundary of an industrial zone would be considered a significant impact, unless authorization has been duly obtained beforehand from the building inspector.

OPERATIONAL IMPACTS

The noise standards applicable to the Project include the relevant portions of the Irwindale General Plan and the City's Municipal Code described in the Regulatory Framework Section above (Section 3.7.2), and the following standards. Generally, a project may have a significant effect on the environment if it will substantially increase the ambient noise levels for adjoining areas or expose people to severe noise levels. In practice, more specific professional standards have been developed. These standards state that a noise impact may be considered significant if it would generate noise that would conflict with local project criteria or ordinances, or substantially increase noise levels at noise sensitive land uses. The potential increase in traffic noise from the Project is a factor in determining significance. Research into the human perception of changes in sound level indicates the following:

- A 3-dB change is barely perceptible,
- A 5-dB change is clearly perceptible, and
- A 10-dB change is perceived as being twice or half as loud.

A limitation of using a single noise level increase value to evaluate noise impacts is that it fails to account for pre-Project-noise conditions. Table 3.7-6 is based upon recommendations made by the Federal Interagency Committee on Noise (FICON) to provide guidance in the assessment of changes in ambient noise levels resulting from aircraft operations. The recommendations are based upon studies that relate aircraft noise levels to the percentage of persons highly annoyed by the noise. Although the FICON recommendations were specifically developed to assess aircraft noise impacts, it has been accepted that they are applicable to all sources of noise described in terms of cumulative noise exposure metrics such as the L_{dn}.

TABLE 3.7-6: SIGNIFICANCE OF CHANGES IN NOISE EXPOSURE

AMBIENT NOISE LEVEL WITHOUT PROJECT, LDN	*INCREASE REQUIRED FOR SIGNIFICANT IMPACT*
<60 dB	+5.0 dB or more
60-65 dB	+3.0 dB or more
>65 dB	+1.5 dB or more

SOURCE: FEDERAL INTERAGENCY COMMITTEE ON NOISE (FICON)

Based on the Table 3.7-6 data, an increase in the traffic noise level of 5 dB or more would be significant where the pre-Project noise levels are less than 60 dB L_{dn}, or 3 dB or more where existing noise levels are between 60 to 65 dB L_{dn}. Extending this concept to higher noise levels, an increase in the traffic noise level of 1.5 dB or more may be significant where the pre-Project traffic noise level exceeds 65 dB L_{dn}. The rationale for the Table 3.7-6 criteria is that, as ambient noise levels increase, a smaller increase in noise resulting from a Project is sufficient to cause annoyance.

IMPACTS AND MITIGATION MEASURES

Impact 3.7-1: The Project may result in exposure of persons to or generation of substantial temporary or permanent increase in ambient noise levels in excess of standards established in the local general plan or noise ordinance, or applicable standards of other agencies – Project Operation. (Less than Significant)

OFF-SITE TRAFFIC NOISE AT OFF-SITE RECEPTORS

Implementation of the proposed Project would result in an increase in daily traffic volumes on the local roadway network, and consequently, an increase in noise levels from traffic sources along affected segments. Tables 3.7-7 to 3.7-9 show the predicted traffic noise level increases on the local roadway network for Existing, Existing + Project, Baseline, Baseline + Project, Cumulative, and Cumulative + Project conditions. Appendix C of Appendix C provides the complete inputs and results of the FHWA traffic noise modeling.

TABLE 3.7-7: EXISTING AND EXISTING PLUS PROJECT TRAFFIC NOISE LEVELS

ROADWAY	*SEGMENT*	*APPROX. RECEPTOR DISTANCE*	*NOISE LEVELS (L_{DN}, dB) AT NEAREST SENSITIVE RECEPTORS*				
			EXISTING	*EXISTING + PROJECT*	*CHANGE*	*CRITERIA*[1]	*SIGNIFICANT?*
Arrow Hwy.	Maine Ave. to Azusa Canyon Rd.	160	65.8	66.2	0.4	+1.5 dB	No
Arrow Hwy.	Azusa Canyon Rd. to 4th St.	500	59.0	59.4	0.4	+5.0 dB	No
Arrow Hwy.	4th St. to Irwindale Ave.	80	70.7	71.1	0.4	+1.5 dB	No
Arrow Hwy.	Irwindale Ave. to Vincent Ave.	60	71.8	72.3	0.5	+1.5 dB	No
Arrow Hwy.	East of Vincent Ave.	50	73.0	73.1	0.1	+1.5 dB	No
Azusa Ave.	Paramount St. Gladstone St.	70	68.2	68.5	0.3	+1.5 dB	No
Cypress St.	West of Vincent Ave.	100	63.5	63.6	0.0	+3.0 dB	No
Cypress St.	East of Vincent Ave.	50	68.2	68.2	0.0	+1.5 dB	No
Gladstone St.	Vincent Ave. to Vernon Ave.	45	72.1	72.6	0.5	+1.5 dB	No
Gladstone St.	Vernon Ave. to Azusa Ave.	65	69.5	69.8	0.4	+1.5 dB	No
Irwindale Ave.	South of Arrow Hwy.	50	66.7	66.7	0.0	+1.5 dB	No
Vincent Ave.	Gladstone St. to Arrow Hwy.	50	70.1	71.3	1.2	+1.5 dB	No
Vincent Ave.	Project North Driveway to Project South Driveway	50	70.7	71.9	1.2	+1.5 dB	No
Vincent Ave.	Project South Driveway to Cypress St.	45	71.4	72.0	0.6	+1.5 dB	No
Vincent Ave.	Project South Driveway to Cypress St.	45	71.5	72.1	0.6	+1.5 dB	No
Vincent Ave.	Cypress St. to San Bernardino Rd.	45	70.4	70.9	0.5	+1.5 dB	No
Vincent Ave.	San Bernardino to Badillo St.	500	50.4	50.8	0.4	+5.0 dB	No
Vincent Ave.	Badillo St. to Puente Ave.	55	70.5	70.8	0.3	+1.5 dB	No
Vincent Ave.	Puente Ave. to Rowland St.	50	71.2	71.5	0.3	+1.5 dB	No
Vincent Ave.	Rowland St. to Workman Ave.	50	71.4	71.7	0.2	+1.5 dB	No
Vincent Ave.	Workman Ave. to I-10 WB Ramps	60	70.9	71.1	0.2	+1.5 dB	No

[1] *WHERE EXISTING NOISE LEVELS ARE LESS THAN 60 DB AN INCREASE OF 5 DB WOULD BE A SIGNIFICANT INCREASE. ADDITIONALLY, ANY INCREASE CAUSING NOISE LEVELS TO EXCEED THE CITY'S NORMALLY ACCEPTABLE 60 DB LDN NOISE LEVEL STANDARD AT AN EXISTING OUTDOOR ACTIVITY AREA OF A RESIDENTIAL USE WOULD ALSO BE SIGNIFICANT. WHERE EXISTING NOISE LEVELS EXCEED 60 DB BUT ARE LESS THAN 65 DB, AN INCREASE OF 3 DB OR MORE WOULD BE SIGNIFICANT. WHERE EXISTING NOISE LEVELS EXCEED 65*

dB, an increase of 1.5 dB or more would be significant.
Source: FHWA-RD-77-108 with inputs from Kunzman Associates and Saxelby Acoustics. 2020.

Table 3.7-8: Baseline and Baseline Plus Project Traffic Noise Levels

Roadway	Segment	Approx. Receptor Distance	Noise Levels (L_{DN}, dB) at Nearest Sensitive Receptors				
			Baseline	Baseline + Project	Change	Criteria[1]	Significant?
Arrow Hwy.	Maine Ave. to Azusa Canyon Rd.	160	65.8	66.2	0.4	+1.5 dB	No
Arrow Hwy.	Azusa Canyon Rd. to 4th St.	500	59.1	59.5	0.4	+5.0 dB	No
Arrow Hwy.	4th St. to Irwindale Ave.	80	70.7	71.2	0.4	+1.5 dB	No
Arrow Hwy.	Irwindale Ave. to Vincent Ave.	60	71.8	72.3	0.5	+1.5 dB	No
Arrow Hwy.	East of Vincent Ave.	50	73.0	73.1	0.1	+1.5 dB	No
Azusa Ave.	Paramount St. Gladstone St.	70	68.3	68.6	0.3	+1.5 dB	No
Cypress St.	West of Vincent Ave.	100	63.6	63.6	0.0	+3.0 dB	No
Cypress St.	East of Vincent Ave.	50	68.2	68.2	0.0	+1.5 dB	No
Gladstone St.	Vincent Ave. to Vernon Ave.	45	72.2	72.7	0.5	+1.5 dB	No
Gladstone St.	Vernon Ave. to Azusa Ave.	65	69.5	69.9	0.4	+1.5 dB	No
Irwindale Ave.	South of Arrow Hwy.	50	66.7	66.7	0.0	+1.5 dB	No
Vincent Ave.	Gladstone St. to Arrow Hwy.	50	70.2	71.4	1.2	+1.5 dB	No
Vincent Ave.	Project North Driveway to Project South Driveway	50	70.7	71.5	0.8	+1.5 dB	No
Vincent Ave.	Project South Driveway to Cypress St.	45	71.4	71.6	0.2	+1.5 dB	No
Vincent Ave.	Project South Driveway to Cypress St.	45	71.5	72.2	0.6	+1.5 dB	No
Vincent Ave.	Cypress St. to San Bernardino Rd.	45	70.4	70.9	0.5	+1.5 dB	No
Vincent Ave.	San Bernardino to Badillo St.	500	50.4	50.8	0.4	+5.0 dB	No
Vincent Ave.	Badillo St. to Puente Ave.	55	70.5	70.8	0.3	+1.5 dB	No
Vincent Ave.	Puente Ave. to Rowland St.	50	71.3	71.5	0.3	+1.5 dB	No
Vincent Ave.	Rowland St. to Workman Ave.	50	71.5	71.7	0.2	+1.5 dB	No
Vincent Ave.	Workman Ave. to I-10 WB Ramps	60	70.9	71.1	0.2	+1.5 dB	No

[1] Where existing noise levels are less than 60 dB an increase of 5 dB would be a significant increase. Additionally, any increase causing noise levels to exceed the City's Normally Acceptable 60 dB Ldn noise level standard at an existing outdoor activity area of a residential use would also be significant. Where existing noise levels exceed 60 dB but are less than 65 dB, an increase of 3 dB or more would be significant. Where existing noise levels exceed 65 dB, an increase of 1.5 dB or more would be significant.
Source: FHWA-RD-77-108 with inputs from Kunzman Associates and Saxelby Acoustics. 2020.

Table 3.7-9: Cumulative and Cumulative + Project Traffic Noise Levels

Roadway	Segment	Approx. Receptor Distance	Noise Levels (L_{DN}, dB) at Nearest Sensitive Receptors				
			Cumulative	Cumulative + Project	Change	Criteria[1]	Significant?
Arrow Hwy.	Maine Ave. to Azusa Canyon Rd.	160	66.3	66.7	0.4	+1.5 dB	No
Arrow Hwy.	Azusa Canyon Rd. to 4th St.	500	59.4	59.8	0.4	+5.0 dB	No
Arrow Hwy.	4th St. to Irwindale Ave.	80	71.1	71.5	0.4	+1.5 dB	No
Arrow Hwy.	Irwindale Ave. to Vincent Ave.	60	72.3	72.8	0.5	+1.5 dB	No
Arrow Hwy.	East of Vincent Ave.	50	73.2	73.3	0.1	+1.5 dB	No
Azusa Ave.	Paramount St. Gladstone St.	70	68.5	68.7	0.3	+1.5 dB	No
Cypress St.	West of Vincent Ave.	100	63.6	63.6	0.0	+3.0 dB	No
Cypress St.	East of Vincent Ave.	50	68.2	68.2	0.0	+1.5 dB	No

ROADWAY	SEGMENT	APPROX. RECEPTOR DISTANCE	NOISE LEVELS (L_{DN}, dB) AT NEAREST SENSITIVE RECEPTORS				
			CUMULATIVE	CUMULATIVE + PROJECT	CHANGE	CRITERIA[1]	SIGNIFICANT?
Gladstone St.	Vincent Ave. to Vernon Ave.	45	72.3	72.8	0.5	+1.5 dB	No
Gladstone St.	Vernon Ave. to Azusa Ave.	65	69.6	70.0	0.4	+1.5 dB	No
Irwindale Ave.	South of Arrow Hwy.	50	66.8	66.9	0.0	+1.5 dB	No
Vincent Ave.	Gladstone St. to Arrow Hwy.	50	70.4	71.6	1.1	+1.5 dB	No
Vincent Ave.	Project North Driveway to Project South Driveway	50	71.0	72.2	1.1	+1.5 dB	No
Vincent Ave.	Project South Driveway to Cypress St.	45	71.7	72.3	0.6	+1.5 dB	No
Vincent Ave.	Project South Driveway to Cypress St.	45	71.8	72.4	0.6	+1.5 dB	No
Vincent Ave.	Cypress St. to San Bernardino Rd.	45	70.6	71.1	0.5	+1.5 dB	No
Vincent Ave.	San Bernardino to Badillo St.	500	50.6	51.0	0.4	+5.0 dB	No
Vincent Ave.	Badillo St. to Puente Ave.	55	70.6	70.9	0.3	+1.5 dB	No
Vincent Ave.	Puente Ave. to Rowland St.	50	71.4	71.6	0.3	+1.5 dB	No
Vincent Ave.	Rowland St. to Workman Ave.	50	71.5	71.8	0.2	+1.5 dB	No
Vincent Ave.	Workman Ave. to I-10 WB Ramps	60	71.0	71.2	0.2	+1.5 dB	No

[1] WHERE EXISTING NOISE LEVELS ARE LESS THAN 60 DB AN INCREASE OF 5 DB WOULD BE A SIGNIFICANT INCREASE. ADDITIONALLY, ANY INCREASE CAUSING NOISE LEVELS TO EXCEED THE CITY'S NORMALLY ACCEPTABLE 60 DB LDN NOISE LEVEL STANDARD AT AN EXISTING OUTDOOR ACTIVITY AREA OF A RESIDENTIAL USE WOULD ALSO BE SIGNIFICANT. WHERE EXISTING NOISE LEVELS EXCEED 60 DB BUT ARE LESS THAN 65 DB, AN INCREASE OF 3 DB OR MORE WOULD BE SIGNIFICANT. WHERE EXISTING NOISE LEVELS EXCEED 65 DB, AN INCREASE OF 1.5 DB OR MORE WOULD BE SIGNIFICANT.

SOURCE: FHWA-RD-77-108 WITH INPUTS FROM KUNZMAN ASSOCIATES AND SAXELBY ACOUSTICS. 2020.

Based upon data in Tables 3.7-7, 3.7-8, and 3-7.9, the proposed Project is predicted to result in a maximum traffic noise level increase of 1.2 dB at various roadways segments under the Existing + Project and Baseline + Project conditions. In the Cumulative + Project condition, the maximum traffic noise level increase would be 1.1 dB. Increases of 1.1 to 1.2 dB are less than the FICON increase criteria as outlined in Table 3.7-6. Therefore, off-site traffic noise at off-site receptors as a result of the proposed Project would be **less than significant**.

NON-TRANSPORTATION NOISE AT OFF-SITE RECEPTORS

The primary non-transportation noise sources associated with the proposed Project are on-site parking lot circulation and the proposed loading docks. In order to evaluate these noise sources at the nearest sensitive receptors, Saxelby Acoustics used the SoundPLAN noise prediction model to generate noise level predictions according to the assumptions outlined below.

The SoundPLAN noise prediction model was used to plot noise contours and to calculate noise levels at the sensitive receptors located around the Project site. Inputs to the SoundPLAN model included ground topography and ground type, noise source locations and heights, receiver locations, and sound power level data. These predictions are made in accordance with International Organization for Standardization (ISO) standard 9613-2:1996 (Acoustics – Attenuation of sound during propagation outdoors).

It should be noted that sound power is a measure of the total acoustic energy emitted by a noise source and is irrespective of distance from the source. Sound power is input into the SoundPLAN model as a representation of the total acoustic energy emitted by a specific noise source. Sound power levels in this section are reported as A-weighted decibel levels, noted as "dBA, PWL" per industry standards. The model then corrects for the many factors (i.e. distance, terrain shielding, atmospheric absorption, etc.) which effect sound propagation from the noise source to the receiver location.

Loading Dock Noise Generation

To determine typical noise levels associated with the proposed loading docks, noise level measurement data from the Clearlake Wal-Mart store was used. The noise level measurements were conducted at a distance of 100 feet from the center of the two-bay loading dock and circulation area. Activities during the peak hour of loading dock activities included truck arrival/departures, truck idling, truck backing, air brake release, and operation of truck-mounted refrigeration units.

A retail store loading dock, such as Wal-Mart, is typically busier than a warehouse loading dock. The Clearlake Wal-Mart dock included use of outdoor forklifts, smaller deliver trucks (containing bread, soda, etc.), and typical full-size semitrucks accessing the two loading bays, including refrigerated semitrucks. These two Clearlake Wal-Mart loading docks served a store of approximately 108,000 square feet, or one dock per 54,000 square feet of retail space. The proposed Project includes 114 loading docks serving approximately 544,000 square feet of warehouse space, or one dock per 4,772 square feet of warehouse space. Therefore, the Clearlake Wal-Mart loading docks handle a much larger area per square feet than the proposed Project. For the proposed Project analysis, all 114 loading docks were assumed to operate at a similar level of activity during one busy hour. This assumption is extremely conservative as simultaneous use of all facility loading docks is not common, and Saxelby Acoustics has not observed this type of busy operation at a large industrial facility. As such, the underlying assumptions made by Saxelby Acoustics are purposely conservative because the specific end user is unknown.

The results of the loading dock noise measurements indicate that a busy hour generated an average noise level of 61 dBA L_{eq} at a distance of 100 feet from the center of the loading dock truck maneuvering lanes. This analysis conservatively assumes that all proposed loading docks could operate at this level of activity in a busy hour.

Parking Lot Circulation

Based upon the traffic study completed for the Project, the Project result in 300 peak hour car trips and 82 peak hour tractor-trailer trips. Based upon noise measurements conducted of vehicle movements in parking lots, the sound exposure level (SEL) for a single passenger vehicle is 71 dBA at a distance of 50 feet, while the SEL of a tractor-trailer is 85 dBA at the same distance.

Saxelby Acoustics used the SoundPLAN noise model to calculate noise levels at the nearest sensitive receptors. Input data included the loading dock and parking lot noise generation, as discussed above. Figure 3.7-2 shows the results of this analysis for the primary site layout in terms of the peak

hour average (L_{eq}). Assuming continuous (24-hour) operation of the Project at operational levels equal to the peak hour, the day/night average (L_{dn}) noise levels associated with the Project are shown on Figure 3.7-3.

Based upon Figure 3.7-2, the Project would generate peak hour noise levels of 65 dBA L_{eq}, or less, at the boundaries of the Project site. This would comply with the City of Irwindale limit of 65 dBA L_{eq} for industrial property noise during nighttime hours (10:00 p.m. to 7:00 a.m.).

Based upon Figure 3.7-3, the proposed Project is predicted to generate noise levels of approximately 58.1 dBA L_{dn} at the residential uses to the west of the Project. Existing ambient noise measurements in the vicinity of these receptors were found to be approximately 60.0 dBA L_{dn}, as shown by Table 3.7-2. At this location, the increase in noise levels due to the proposed Project is estimated to be 2.2 dBA. This would be less than the FICON increase criteria of 3 dBA where existing noise levels are between 60 to 65 dBA.

Based upon Figure 3.7-3, the proposed Project is predicted to generate noise levels of approximately 64.4 dBA L_{dn} at the residential uses to the east of the Project. Existing ambient noise measurements in the vicinity of these receptors was found to be approximately 73.5 dBA L_{dn}, as shown by Table 3.7-2. At this location, the increase in noise levels due to the proposed Project is estimated to be 0.5 dBA. This would be less than the FICON increase criteria of 1.5 dBA where existing noise levels exceed 65 dBA. Therefore, off-site traffic noise at off-site receptors as a result of the proposed Project would be **less than significant**.

Impact 3.7-2: The Project may result in exposure of persons to or generation of substantial temporary increase in ambient noise levels in excess of standards established in the local general plan or noise ordinance, or applicable standards of other agencies – Project Construction. (Less than Significant)

The FHWA Roadway Construction Noise Model (RCNM) was used to predict noise levels for standard construction equipment used for roadway improvement projects. The assessment of potential significant noise effects due to construction is based on the standards and procedures described in the Federal Transit Authority (FTA) guidance manual and FHWA's RCNM.

The RCNM is a Windows-based noise prediction model that enables the prediction of construction noise levels for a variety of construction equipment based on a compilation of empirical data and the application of acoustical propagation formulas. It enables the calculation of construction noise levels in more detail than the manual methods, which eliminates the need to collect extensive amounts of Project-specific input data. RCNM allows for the modeling of multiple pieces of construction equipment working either independently or simultaneously, the character of noise emission, and the usage factors for each piece of equipment.

Construction noise varies depending on the construction process, type of equipment involved, location of the construction site with respect to sensitive receptors, the schedule proposed to carry

out each task (e.g., hours and days of the week), and the duration of the construction work. Noise sources in the RCNM database include actual noise levels and equipment usage percentages. This source data was used in this construction noise analysis. Table 3.7-10 shows predicted construction noise levels for each of the Project construction phases. These assumptions are consistent with the air quality assessment prepared for the Project.

Based upon the Table 3.7-10 data, site preparation, grading, and building construction are predicted to be the loudest phases of construction with an average noise exposure of 88 dBA at 50 feet. Saxelby Acoustics used the SoundPLAN noise model to calculate noise levels at the nearest sensitive receptors assuming the construction activity were uniformly distributed across the Project site. The results of this analysis are shown graphically on Figure 3.7-4.

TABLE 3.7-10: CONSTRUCTION EQUIPMENT NOISE LEVELS FOR PRIMARY CONSTRUCTION PHASES

EQUIPMENT	*QUANTITY*	*USAGE (%)*	*MAXIMUM, LMAX (DBA AT 50 FEET)*	*HOURLY AVERAGE, LEQ (DBA AT 50 FEET)*
SITE PREPARATION				
Dozer	3	40	82	83
Tractor/Loader/Backhoe	4	40	84	86
			Total	**88**
GRADING				
Excavator	2	40	81	80
Grader	1	40	85	81
Dozer	1	40	82	78
Scraper	2	40	84	83
Tractor/Loader/Backhoe	2	40	84	83
			Total	**88**
BUILDING CONSTRUCTION				
Crane	1	16	81	73
Forklift	3	40	83	84
Generator	1	50	81	78
Tractor/Loader/Backhoe	3	40	84	85
Welder/Torch	1	40	74	70
			Total	**88**
PAVING				
Paver	2	50	77	77
Paving Equipment	2	50	77	77
Rollers	2	20	80	76
			Total	**81**
ARCHITECTURAL COATING				
Air Compressor	1	40	79	75
			Total	**75**

SOURCE: FHWA, ROADWAY CONSTRUCTION NOISE MODEL (RCNM), JANUARY 2006.

During the construction phases of the Project, noise from construction activities would add to the noise environment in the immediate Project vicinity. Based upon the Figure 3.7-4 data, the proposed Project is predicted to generate average construction noise levels of less than 75 dBA L_{eq} at the boundaries of the Project site.

Per the City of Irwindale noise ordinance, if construction activities are within a radius of 500 feet of a residential zone, construction activities exceeding 75 dBA ambient base noise levels between 7 a.m. and 7 p.m. at the property boundary of an industrial zone would be considered a significant impact, unless authorization therefore has been duly obtained beforehand from the building inspector. Based upon Figure 3.7-4, construction of the Project is not predicted to cause construction noise levels to exceed 75 dBA L_{eq} at the Project boundaries.

Compliance with the City's permissible hours of construction, as well as implementing the best management noise reduction techniques and practices (both outlined in Mitigation Measure 3.7-1), would ensure that construction noise would not result in a substantial temporary increase in ambient noise levels that would result in annoyance or sleep disturbance of nearby sensitive receptors. Therefore, with implementation of Mitigation Measure 3.7-1, temporary construction noise impacts would remain **less than significant**.

MITIGATION MEASURE(S)

Mitigation Measure 3.7-1: *To reduce potential construction noise impacts during Project construction, the following multi-part mitigation measure shall be implemented for the Project:*

- *All construction equipment powered by internal combustion engines shall be properly muffled and maintained.*
- *Quiet construction equipment, particularly air compressors, are to be selected whenever possible.*
- *All stationery noise-generating construction equipment such as generators or air compressors are to be located as far as is practical from existing residences. In addition, the Project contractor shall place such stationary construction equipment so that emitted noise is directed away from sensitive receptors nearest the Project site.*
- *Unnecessary idling of internal combustion engines is prohibited.*
- *The construction contractor shall, to the maximum extent practical, locate on-site equipment staging areas so as to maximize the distance between construction-related noise sources and noise-sensitive receptors nearest the Project site during all Project construction.*
- *Construction shall be limited to 7 AM to 7 PM on weekdays and 8 AM to 4 PM on Saturdays with no work allowed on Sundays unless otherwise authorized by the City in writing.*
- *Staging areas on the Project site shall be located in areas that maximize, to the extent feasible, the distance between staging activity and sensitive receptors.*

These requirements shall be noted on the Project improvement plans.

Impact 3.7-3: The Project may result in exposure of persons to or generation of excessive groundborne vibration or groundborne noise levels. (Less than Significant)

The primary vibration-generating activities would be grading, utilities placement, and parking lot construction. Table 3.7-11 shows the typical vibration levels produced by construction equipment.

Construction vibration impacts include human annoyance and building structural damage. Human annoyance occurs when construction vibration rises significantly above the threshold of perception. Building damage can take the form of cosmetic or structural damage.

With the exception of vibratory compactors, the Table 3.7-11 data indicate that construction vibration levels anticipated for the Project are less than the 0.2 in/sec threshold at a distance of 25 feet. Use of vibratory compactors within 26 feet of the adjacent buildings could cause vibrations in excess of 0.2 in/sec. Sensitive receptors which could be impacted by construction-related vibrations, especially vibratory compactors/rollers, are located approximately 100 feet, or further, from the Project site. Therefore, this is a **less-than-significant** impact and no mitigation is required.

TABLE 3.7-11: VIBRATION LEVELS FOR VARIOUS CONSTRUCTION EQUIPMENT

TYPE OF EQUIPMENT	*PEAK PARTICLE VELOCITY AT 25 FEET (IN/SEC)*	*PEAK PARTICLE VELOCITY AT 50 FEET (IN/SEC)*	*PEAK PARTICLE VELOCITY AT 100 FEET (IN/SEC)*
Large Bulldozer	0.089	0.031	0.011
Loaded Trucks	0.076	0.027	0.010
Small Bulldozer	0.003	0.001	0.000
Auger/drill Rigs	0.089	0.031	0.011
Jackhammer	0.035	0.012	0.004
Vibratory Hammer	0.070	0.025	0.009
Vibratory Compactor/roller	0.210 (Less than 0.20 at 26 feet)	0.074	0.026

SOURCE: TRANSIT NOISE AND VIBRATION IMPACT ASSESSMENT GUIDELINES. FEDERAL TRANSIT ADMINISTRATION. MAY 2006.

This page left intentionally blank.



5175 Vincent Ave. Irwindale

City of Irwindale, California

Figure 3.7-1

Noise Measurement Sites

Legend

▲ Noise Measurement - Long Term

100 ft 250 ft 400 ft

Projection: State Plane (California Zone 5) / NAD83 / meters
Rev. Date: 02/19/2020

SAXELBY ACOUSTICS
Acoustics · Noise · Vibration

This page left intentionally blank.

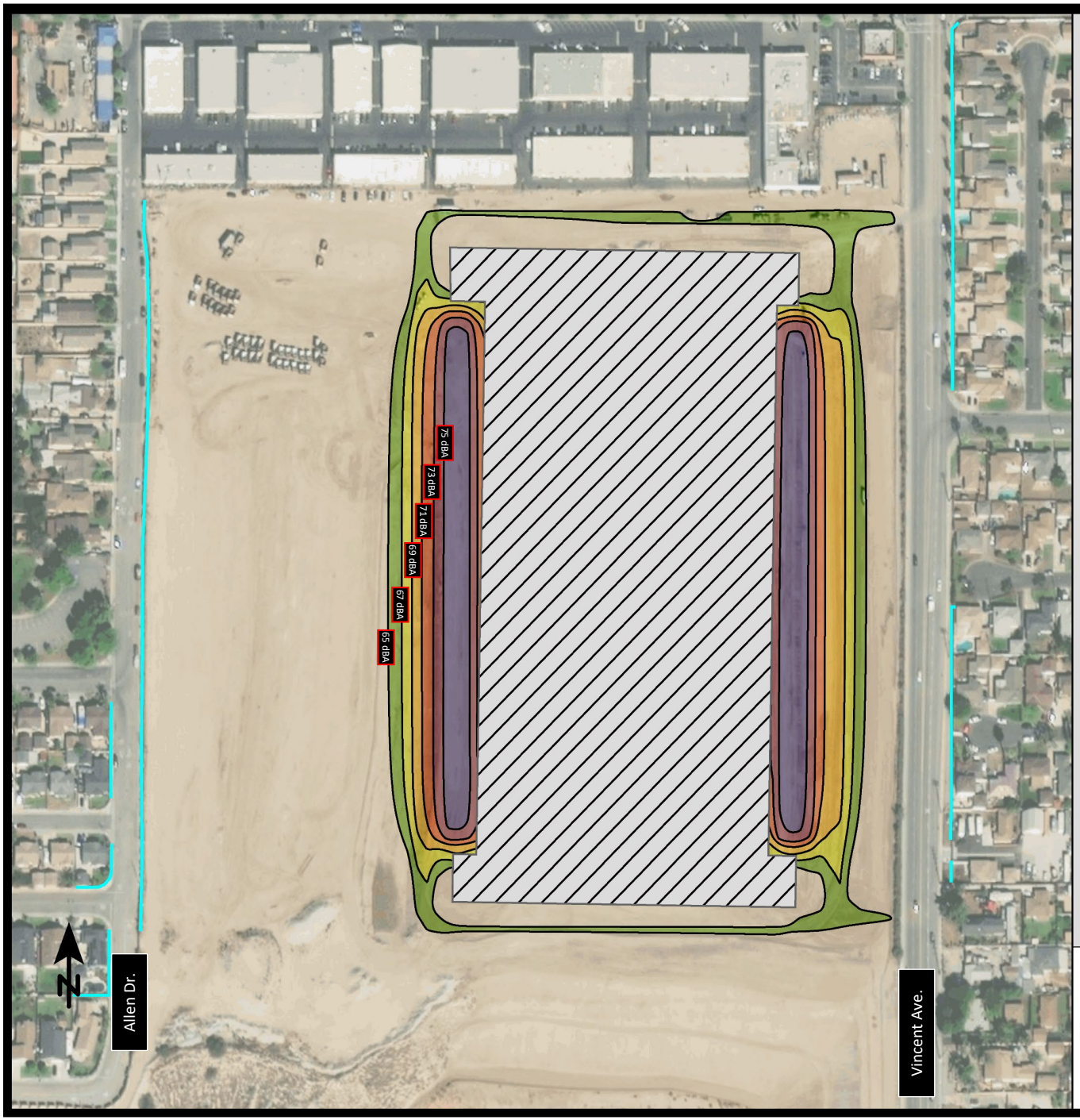

5175 Vincent Ave Project

City of Irwindale, California

Figure 3.7-2

Predicted Project Noise Contours (dBA L_{eq}) – Proposed Site Layout

Signs and symbols

Existing Sound Wall

Levels in dB(A)

<= 65
65 - 67
67 - 69
69 - 71
71 - 73
73 - 75
> 75

1 : 2786

0 15 30 60 90 120 m

SAXELBY ACOUSTICS
Acoustics · Noise · Vibration

This page left intentionally blank.

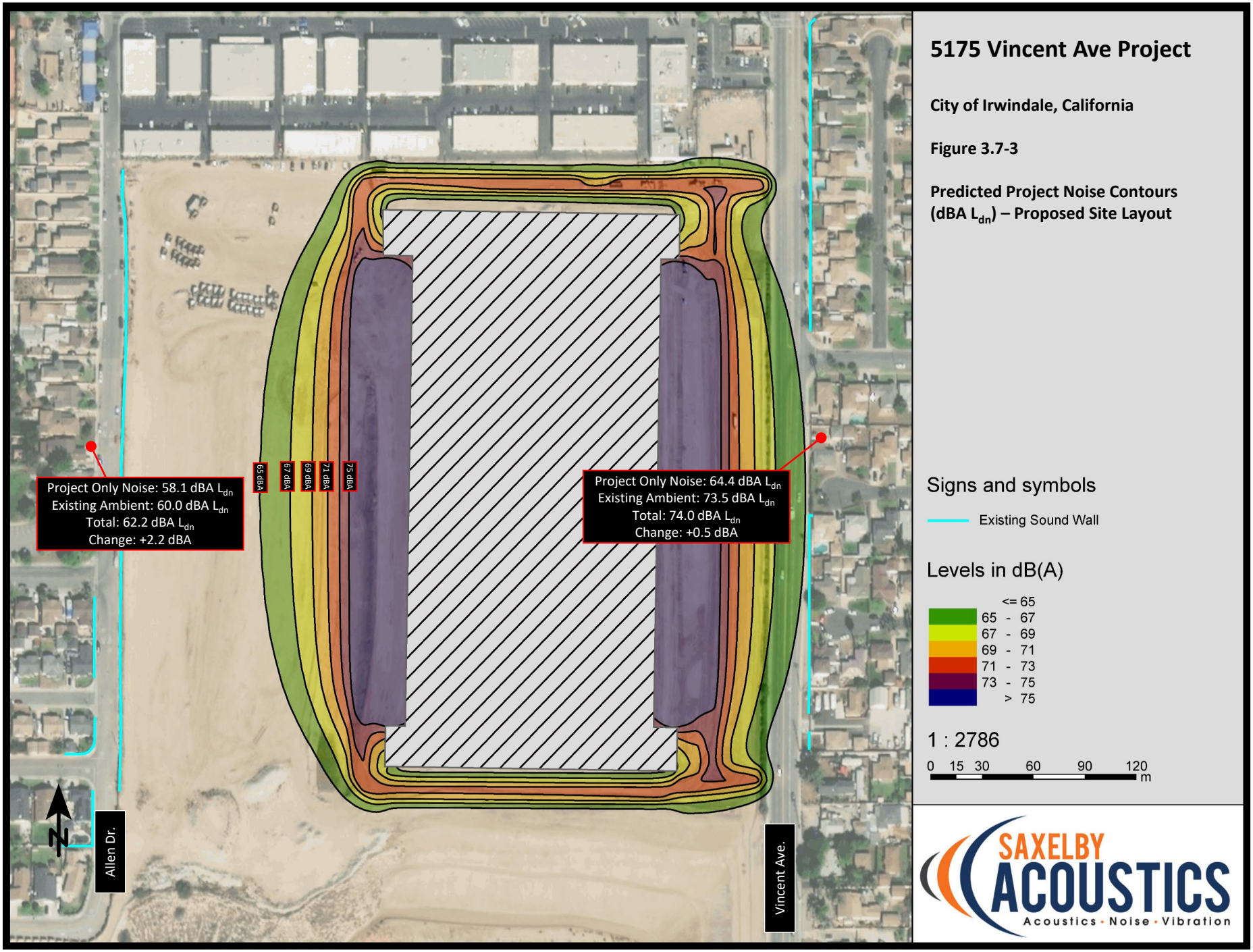

5175 Vincent Ave Project

City of Irwindale, California

Figure 3.7-3

Predicted Project Noise Contours (dBA L_{dn}) – Proposed Site Layout

Signs and symbols

Existing Sound Wall

Levels in dB(A)

<= 65
65 - 67
67 - 69
69 - 71
71 - 73
73 - 75
> 75

1 : 2786

0 15 30 60 90 120 m

SAXELBY ACOUSTICS
Acoustics · Noise · Vibration

This page left intentionally blank.

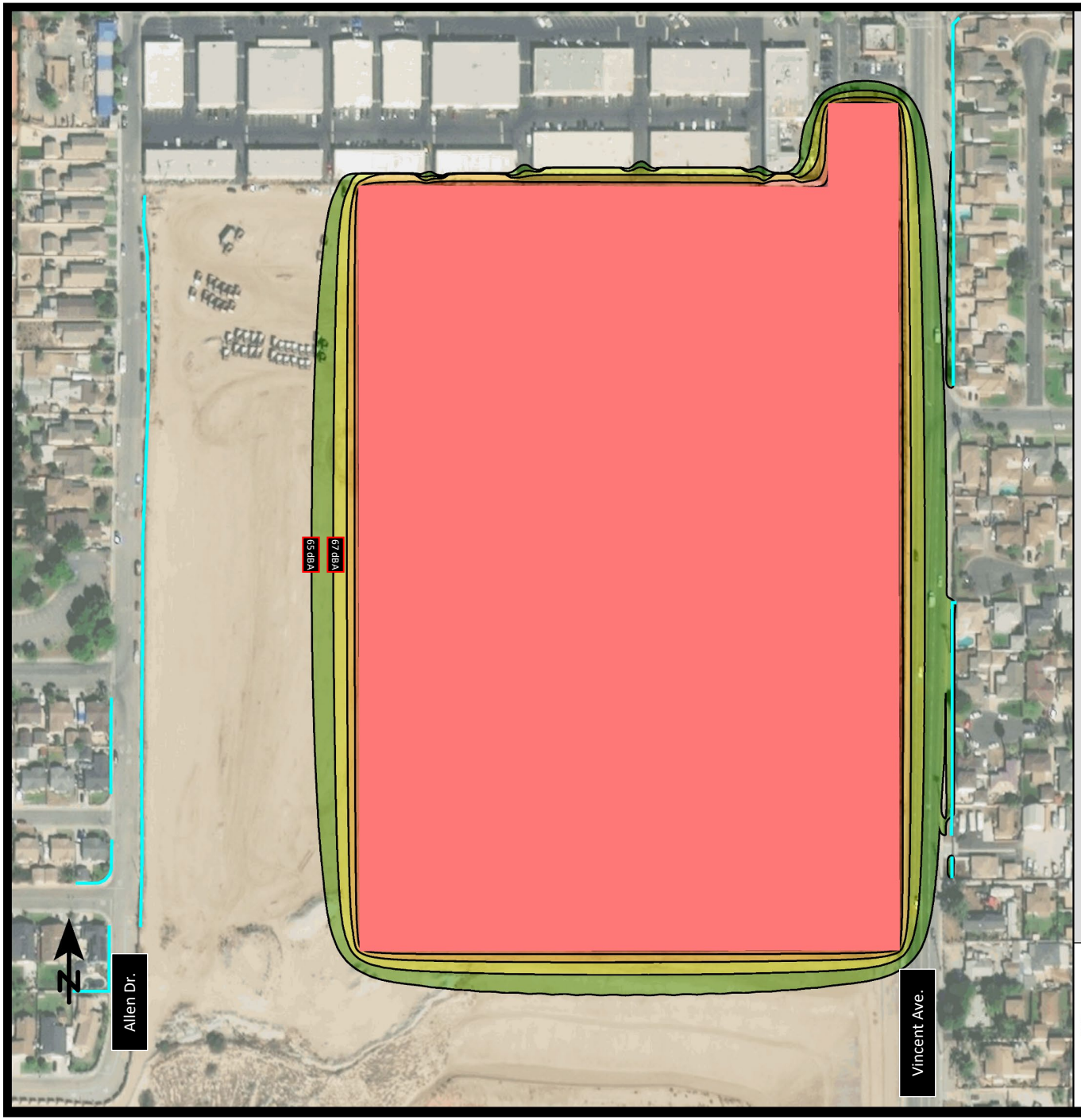

5175 Vincent Ave Project

City of Irwindale, California

Figure 3.7-4

Predicted Construction Noise Contours (dBA L_{eq})

Signs and symbols

Existing Sound Wall

Construction Noise Source

Levels in dB(A)

	<= 65
	65 - 67
	67 - 69
	69 - 71
	71 - 73
	73 - 75
	> 75

1 : 2786

0 15 30 60 90 120 m

SAXELBY ACOUSTICS
Acoustics · Noise · Vibration

This page left intentionally blank.

This section of the EIR analyzes the potential impacts of the proposed 5175 Vincent Avenue Project (proposed Project) on the surrounding transportation system including roadways, bicycle/pedestrian facilities, and transit facilities/services. This section identifies the significant impacts of the proposed Project and recommends mitigation measures to lessen their significance. An evaluation of vehicular access to the Project is also provided. This section is based on the Traffic Impact Analysis completed for the Project (Ganddini Group Inc., December 2020), which is included as Appendix D of the Draft EIR.

Comments were received during the public review period or scoping meeting for the Notice of Preparation regarding this topic from the following: California Department of Transportation (Caltrans, March 11, 2020), Anonymous (February 20, 2020), Edward and Margaret Curren (February 20, 2020), and James Trenkamp and Charlotte Santos (February 20, 2020). Each of the comments related to this topic are addressed within this section. Full comments received are included in Appendix A.

3.8.1 ENVIRONMENTAL SETTING

PROJECT LOCATION

The 5175 Vincent Avenue Project site (Project site) is located north of a Los Angeles County-owned pit, east of Allen Drive, south of Arrow Highway, and west of Vincent Avenue in Irwindale, California. The Project site totals approximately 26.05 acres and is comprised of two vacant parcels; one of which is an undeveloped, recently filled, former aggregate mine pit known as the Manning Pit.

Regional access to the Project area is provided by the Interstate 605 (I-605) Freeway to the west, Interstate 10 (I-10) Freeway to the south, and the Interstate 210 (I-210) Freeway to the north. Key north-south roadways providing local access include Irwindale Avenue, Vincent Avenue, and Lark Ellen Avenue. Key east-west roadways providing local access include Gladstone Street, Arrow Highway, and Cypress Street.

Figure 2.0-2 in Chapter 2.0, Project Description, displays the regional location of the Project site relative to the surrounding transportation system.

STUDY AREA ROADWAYS

The following describes the key roadways in the study area.

Arrow Highway is an east-west, four-lane roadway that is located north of the Project site. At the eastern terminus, Arrow Highway turns into W. La Verne Avenue in the City of La Verne. At the western terminus, Arrow Highway turns into E. Live Oak Avenue near Mayflower Village. Through the study area, the speed limit of Arrow Highway is 40 miles-per-hour (mph).

Vincent Avenue is a north-south, four-lane roadway that is located east of the Project site. The roadway terminates at W. Gladstone Street to the north and turns into S. Glendora Avenue to the south in West Covina. Through the study area, the speed limit of Vincent Avenue is 35 mph. Project access would be provided off Vincent Avenue.

Irwindale Avenue is a north-south, four-lane roadway that is located west of the Project site. The roadway terminates at W. Foothill Boulevard to the north and turns into N. Sunset Avenue to the south at the intersection with Badillo Street. Through the study area, the speed limit of Irwindale Avenue is 40 mph.

EXISTING PEDESTRIAN AND BICYCLE FACILITIES

Existing pedestrian facilities in the vicinity of the Project site are shown on Figure 3.8-1. Sidewalks are currently provided on both sides of Vincent Avenue along the Project site frontage. Figure 3.8-2 shows the City of Irwindale Bicycle route map. There are no existing bicycle facilities within proximity to the Project site. As shown on Figure 3.8-2, there are buffered bike lanes/separated bikeways (Class II/IV) recommended along Live Oak Avenue, Arrow Highway, Azusa Canyon Road, and Irwindale Avenue in the Project vicinity.

TRANSIT SERVICE

The study area is served by the Foothill Transit and Baldwin Park Transit. Figure 3.8-3 shows existing transit service within the City of Irwindale. As shown on Figure 3.8-3, Foothill Transit Routes 185/272/492 and the Baldwin Park Teal Line provide transit service along parts of Live Oak Avenue, Baldwin Park Boulevard, Arrow Highway, and Irwindale Avenue. The nearest transit stop to the Project is for Foothill Transit Route 492 located at the intersection of Vincent Avenue/Arrow Highway approximately 300 feet from the Project site.

3.8.2 ANALYSIS METHODS

An analysis of vehicle miles traveled (VMT) was performed for the Project. In general terms, VMT quantifies the amount and distance of automobile travel attributable to a project or region. The City of Irwindale adopted Resolution No. 2020-53-3163 in November 2020, which establishes VMT thresholds of significance for purposes of analyzing transportation impacts under CEQA. Table 3.8-1 shows the City of Irwindale VMT thresholds of significance as adopted via Resolution No. 2020-53-3163.

TABLE 3.8-1: CITY OF IRWINDALE VMT THRESHOLDS OF SIGNIFICANCE

PROJECT TYPE	*THRESHOLDS*
Land Use Plan	1. **Project Impact:** A significant impact would occur if the VMT rate for the plan would exceed a level of 15 percent below the applicable baseline VMT rate. 2. **Cumulative Project Effect:** A significant impact would occur if the project increases total regional VMT compared to cumulative no project conditions.
Land Use Project	1. **Project Impact:** A significant impact would occur if the VMT rate for the project would exceed a level of 15 percent below the applicable baseline VMT rate. 2. **Cumulative Project Effect:** A significant impact would occur if the project increases total regional VMT compared to cumulative no project conditions.

PROJECT TYPE	*THRESHOLDS*
Retail Project (over 50,000 square feet)	1. **Project Impact:** A significant impact would occur if the VMT rate for the project would exceed a level of 15 percent below the applicable baseline VMT rate. 2. **Cumulative Project Effect:** A significant impact would occur if the project increases total VMT in the study area compared to baseline conditions.
Transportation Project	A significant impact would occur if the project causes a net increase in total regional VMT compared to baseline conditions, opening year no project conditions, or cumulative no project conditions.
All land use and transportation projects	A significant impact would occur if the project is inconsistent with the SCAG Regional Transportation Plan/Sustainable Communities Strategy.

NOTES: (1) THE BASELINE VMT RATE IS DEFINED AS THE CITY OF IRWINDALE AVERAGE VMT RATE PER APPLICABLE SERVICE POPULATION.
(2) THE BASELINE VMT IS SUBJECT TO CHANGE PENDING UPDATES TO THE SCAG RTP MODEL.
SOURCE: CITY OF IRWINDALE RESOLUTION NO. 2020-53-3163, 2020.

Because the proposed Project consists of an industrial land use, the applicable VMT per service population is defined as home-base work VMT per employee. Based on the City-adopted thresholds, a "yes" to any of the following applicable criteria would indicate a significant VMT impact for the proposed Project:

- **Project Impact:** Would the Project-generated home-based work VMT per employee exceed a level of 15 percent below City of Irwindale average home-based work VMT per employee?
- **Cumulative Impact:** Would the Project increase the total regional VMT compared to cumulative no Project conditions?
- **Cumulative Impact:** Is the Project inconsistent with the Southern California Association of Governments (SCAG) Regional Transportation Plan/Sustainable Communities Strategies (RTP/SCS)?

Because City of Irwindale's adopted VMT thresholds do not include screening criteria, the Project VMT screening assessment is based on guidance from the State's Technical Advisory and review of draft VMT procedures for the San Gabriel Valley Council of Governments (SGVCOG). The Technical Advisory provides the following potential screening criteria for certain land development projects that may be presumed to result in a less than significant VMT impact:

- **Local serving** retail, schools, daycare, student housing, etc.
- **Small projects** generating less than 110 trips per day.
- Residential and office projects located in areas with **low-VMT**.
- Projects **near transit** stations or major transit stop.
- Residential projects with a high percentage of **affordable housing**.

For mixed-use projects, the Technical Advisory recommends that lead agencies can evaluate each component of a mixed-use project independently and apply the thresholds of significance for each lane use (e.g., office and retail). Alternatively, a lead agency may consider only the project's dominant use. In the analysis of each use, a project should take credit for internal capture.

SCREENING ASSESSMENT FOR LOCAL SERVING USES

The Technical Advisory defines local serving retail as less than 50,000 square feet. New retail development typically redistributes shopping trips rather than creating new trips. By adding retail opportunities into the urban fabric and thereby improving proximity, local-serving retail tends to shorten trips and reduce VMT. Similarly, other local serving uses such as schools, daycare, student housing, and public facilities would typically improve the proximity of such uses within the community, thereby shortening travel distances and reducing VMT.

The proposed Project does not include a retail component; therefore, this screening criteria does not apply.

SCREENING ASSESSMENT FOR SMALL PROJECTS

As noted in the Technical Advisory, California Environmental Quality Act (CEQA) Guidelines § 15301, subdivision (e)(2) provides a categorical exemption for existing facilities, including additions to existing structures of up to 10,000 square feet, so long as the project is in an area where public infrastructure is available to allow for maximum planned development and the project is not in an environmentally sensitive area. Typical project types for which trip generation increases relatively linearly with building footprint (i.e., general office building, single tenant office building, office park, and business park) generate or attract an additional 110-124 trips per 10,000 square feet. Therefore, absent substantial evidence otherwise, it is reasonable to conclude that the addition of 110 or fewer trips could be considered not to lead to a significant impact.

Early adopters of the VMT metric are using similar or slightly higher thresholds for small projects. The Cities of Santa Ana and San Jose, for example, have adopted a screening threshold for small infill projects based on 110 daily trips. The City of Los Angeles has established a screening threshold for projects that generate fewer than 250 net daily trips. The draft guidelines by the San Diego Section of the Institute of Transportation Engineers recommends a screening threshold as high as 1,000 daily trips for projects that are consistent with a General or Community Plan or 500 daily trips for projects that are inconsistent with a General or Community Plan.

The proposed Project is forecast to generate more than 110 net new daily weekday trips; therefore, the proposed Project does not satisfy this screening criteria.

It is noted that scoping coordination with City of Irwindale staff considered several methods for project trip generation, including review of ITE rates for warehousing and high-cube warehousing combined with SCAQMD-recommended truck mix. Ultimately, the trip generation forecast used in the final traffic impact analysis was determined to provide a more conservative analysis than using ITE rates for warehousing or high-cube warehousing with SCAQMD-recommended warehouse truck mixes since the ITE rates for light industrial are substantially higher.

Scoping coordination occurred in 2018 prior to release of more recent truck generation data from ITE; therefore, truck mix data for light industrial uses from the City of Fontana study was used as that document had historically been an industry accepted reference for the region, in particular for the light industrial land use. Comparison to more recent truck generation data from ITE indicates

that the number of daily truck trips analyzed in the final traffic impact analysis is higher than it would be using the more recent ITE warehouse truck rates combined with SCAQMD-recommended truck mix data for high-cube warehouses. It is noted that the high-cube fulfillment center warehouse with sorting (ITE 155) would generate more daily passenger car trips but this rate is based on a limited sample size not considered suitable for analysis.

SCREENING ASSESSMENT FOR PROJECTS IN LOW VMT AREAS

The Technical Advisory provides guidance indicating that residential and office projects located in areas with low VMT and that exhibit similar VMT-related features (e.g., density, mix of uses, transit accessibility), will typically exhibit similarly low VMT. Identifying low VMT areas requires maps to be created using VMT data from travel surveys or a travel demand model that illustrate areas that are below the established VMT threshold.

Low VMT screening for the Project was assessed using the San Gabriel Valley Council of Governments (SGVCOG) VMT Evaluation Tool, which was developed by SGVCOG on behalf of member agencies, including the City of Irwindale, and is based on the SCAG Regional Travel Demand Model (2016 RTP Base Year 2012 data version). Based on the SGVCOG VMT Evaluation Tool, the proposed Project is located in a zone that is between zero and 15 percent below the existing baseline VMT for the City of Irwindale. Because the City's threshold of significance is 15 percent below the existing baseline VMT, the proposed Project does not satisfy the low VMT screening criteria.

See Impact 3.8-1 for more discussion regarding the Project-related VMT.

SCREENING ASSESSMENT FOR PROJECTS NEAR TRANSIT STATIONS

As noted in the Technical Advisory, CEQA Guideline Section 15064.3, subdivision (b)(1) states that lead agencies generally should presume that certain projects proposed within one-half mile of an existing major transit stop or an existing stop along a high-quality transit corridor[1] will have a less than significant impact on VMT. This presumption would not apply, however, if project-specific information indicates that the project may still generate significant levels of VMT.

Based on review of the SCAG High Quality Transit Area map for the year 2016, the proposed Project is not located within one-half mile of a major transit stop or high-quality transit corridor; therefore, the proposed Project does not satisfy this screening criteria.

SCREENING ASSESSMENT FOR AFFORDABLE HOUSING

The proposed Project does not contain an affordable housing component; therefore, this screening criteria does not apply.

[1] Pub. Resources Code, § 21155 ("For purposes of this section, a high-quality transit corridor means a corridor with fixed route bus service with service intervals no longer than 15 minutes during peak commute hours.").

3.8.3 REGULATORY SETTING

Existing transportation polices, laws, and regulations that would apply to the proposed Project are summarized below. This information provides a context for the impact discussion related to the Project's consistency with applicable regulatory conditions and development of significance criteria for evaluating Project impacts.

FEDERAL

No federal plans, policies, regulations, or laws pertaining to transportation have been determined to be applicable to this Project.

STATE

Caltrans

Caltrans is responsible for planning, designing, constructing, operating, and maintaining all state-owned roadways in California. Federal highway standards are implemented in California by Caltrans. Any improvements or modifications to the state highway system within the City of Irwindale need to be approved by Caltrans. The City of Irwindale does not have the ability to unilaterally make improvements to the state highway system.

Senate Bill 743

California Senate Bill 743 (SB 743) directs the State Office of Planning and Research (OPR) to amend the CEQA Guidelines for evaluating transportation impacts to provide alternatives to Level of Service that "promote the reduction of greenhouse gas emissions, the development of multimodal transportation networks, and a diversity of land uses." In December 2018, the California Natural Resources Agency certified and adopted the updated CEQA Guidelines package. The amended CEQA Guidelines, specifically Section 15064.3, recommend the use of VMT as the primary metric for the evaluation of transportation impacts associated with land use and transportation projects. In general terms, VMT quantifies the amount and distance of automobile travel attributable to a project or region. Agencies may currently opt-in to applying the updated CEQA guidelines for VMT analysis and implementation is required State-wide by July 1, 2020.

The updated CEQA Guidelines allow for lead agency discretion in establishing methodologies and thresholds provided there is substantial evidence to demonstrate that the established procedures promote the intended goals of the legislation. Where quantitative models or methods are unavailable, Section 15064.3 allows agencies to assess VMT qualitatively using factors such as availability of transit and proximity to other destinations. The Technical Advisory on Evaluating Transportation Impacts in CEQA (State of California, December 2018) ["Technical Advisory"] provides technical considerations regarding methodologies and thresholds with a focus on office, residential, and retail developments as these projects tend to have the greatest influence on VMT.

LOCAL

City of Irwindale General Plan

INFRASTRUCTURE ELEMENT

- **Policy 3**. The City of Irwindale will continue to develop and enhance the existing streets and intersections in the City.
- **Policy 4**. The City of Irwindale will strive to ensure that all new development implements its "fair-share" of infrastructure improvements to offset the potential adverse impacts associated with the additional traffic that will be generated by the new development.
- **Policy 5**. The City of Irwindale will continue to support the development and expansion of the region's public and mass transit system.

3.8.4 IMPACTS AND MITIGATION MEASURES

THRESHOLDS OF SIGNIFICANCE

Consistent with Appendix G of the CEQA Guidelines, the Project will have a significant impact related to transportation and circulation if it will result in:

- Conflict with a program, plan, ordinance, or policy addressing the circulation system, including transit, roadway, bicycle, and pedestrian facilities.
- Conflict or be inconsistent with CEQA Guideline section 15064.3, subdivision (b).
- Substantially increase hazards due to a geometric design feature (e.g., sharp curves or dangerous intersections) or incompatible uses (e.g., farm equipment).
- Result in inadequate emergency access.

IMPACTS AND MITIGATION MEASURES

Impact 3.8-1: The Project would not conflict or be inconsistent with CEQA Guideline section 15064.3, subdivision (b)[2]. (Less Than Significant with Mitigation)

As noted previously, because the proposed Project does not satisfy any of the SGVCOG screening criteria, a detailed VMT analysis for the Project was performed using the SGVCOG VMT Evaluation

[2] CEQA Guidelines section 15064.3, subdivision (b), states:
"(b) Criteria for Analyzing Transportation Impacts.
(1) Land Use Projects. Vehicle miles traveled exceeding an applicable threshold of significance may indicate a significant impact. Generally, projects within one-half mile of either an existing major transit stop or a stop along an existing high quality transit corridor should be presumed to cause a less than significant

Tool. The SGVCOG VMT Evaluation Tool was developed using data from the SCAG Regional Travel Demand Model (2016 RTP Base Year 2012 data version). The Project site is located in Traffic Analysis Zone (TAZ) 22307100. A baseline year of 2020 was used for the analysis. The SGVCOG VMT Evaluation Tool report is provided in Appendix F of Appendix D.

Project Impact: Would the Project-generated home-based work VMT per employee exceed a level of 15% below City of Irwindale average home-based work VMT per employee?

Based on the SGVCOG VMT Evaluation Tool, the average City of Irwindale VMT for the 2020 baseline year is 22.51 home-based work VMT per employee. Accordingly, a project impact would be significant if the project-generated home-based work VMT per employee exceeds 19.13. Based on SGVCOG VMT Evaluation Tool Report, the Project-generated home-based work VMT per employee is equal to 21.72. Therefore, the proposed Project would exceed the City-established threshold, and mitigation would be required to reduce the Project-generated home-based work VMT.

With implementation of Mitigation Measure 3.8-1, the Project-generated home-based work VMT Project employee is equal to 17.38. Therefore, with implementation of this mitigation, the proposed Project would result in a ***less than significant*** impact related to VMT.

Cumulative Impact: Would the Project increase the total regional VMT compared to cumulative no project conditions?

The State's Technical Advisory notes that a project's cumulative impacts are based on an assessment of whether the ""incremental effects of an individual project are considerable when viewed in connection with the effects of past projects, the effects of other current projects, and the effects of probable future projects." (Pub. Resources Code, § 21083, subd. (b)(2); see CEQA

transportation impact. Projects that decrease vehicle miles traveled in the project area compared to existing conditions should be presumed to have a less than significant transportation impact.
(2) Transportation Projects. Transportation projects that reduce, or have no impact on, vehicle miles traveled should be presumed to cause a less than significant transportation impact. For roadway capacity projects, agencies have discretion to determine the appropriate measure of transportation impact consistent with CEQA and other applicable requirements. To the extent that such impacts have already been adequately addressed at a programmatic level, such as in a regional transportation plan EIR, a lead agency may tier from that analysis as provided in Section 15152.
(3) Qualitative Analysis. If existing models or methods are not available to estimate the vehicle miles traveled for the particular project being considered, a lead agency may analyze the project's vehicle miles traveled qualitatively. Such a qualitative analysis would evaluate factors such as the availability of transit, proximity to other destinations, etc. For many projects, a qualitative analysis of construction traffic may be appropriate.
(4) Methodology. A lead agency has discretion to choose the most appropriate methodology to evaluate a project's vehicle miles traveled, including whether to express the change in absolute terms, per capita, per household or in any other measure. A lead agency may use models to estimate a project's vehicle miles traveled, and may revise those estimates to reflect professional judgment based on substantial evidence. Any assumptions used to estimate vehicle miles traveled and any revisions to model outputs should be documented and explained in the environmental document prepared for the project. The standard of adequacy in Section 15151 shall apply to the analysis described in this section."

Guidelines, § 15064, subd. (h)(1).)" The Technical Advisory further clarifies that a project that falls below an efficiency-based threshold (such as VMT per employee) that is aligned with long-term environmental goals and relevant plans would have no cumulative impact distinct from the project impact. Accordingly, a finding of a less than significant project impact would imply a less than significant cumulative impact, and vice versa.

With implementation of Mitigation Measure 3.8-1, the Project is forecast to generate VMT that is 15% below the City of Irwindale average. Therefore, the Project would not increase the total regional VMT. Overall, with implementation of this mitigation, the proposed Project would result in a ***less than significant*** cumulative impact related to VMT.

Cumulative Impact: Is the Project inconsistent with the SCAG RTP/SCS?

The SCAG 2020-2045 RTP/SCS, also known as Connect SoCal, was developed with input from all 197 local jurisdictions, including the City of Irwindale. The information used to develop the RTP/SCS includes the current land use, socio-economic demographics, and sustainability practices and is documented in a Data Map/Book for each jurisdiction. The Data Map/Book illustrates that the Project site is designated as "Industrial" land use in the 2016 SCAG Land Use Codes. Therefore, the proposed Project is consistent with the SCAG RTP/SCS, and a ***less than significant*** impact related to this topic would occur.

CONCLUSION

To mitigate the Project VMT impacts to a less than significant level, Mitigation Measure 3.8-1 is required. This mitigation measure requires the Project employer to provide general commute benefits to employees, which may include financial subsidies or pre-tax deductions for transit, carpooling, and vanpooling activities. Additionally, all employees must be eligible for alternative transportation benefits.

The efficacy of these mitigation strategies is evidenced by a study which contains several case studies on the influence of commuter benefits on employee travel.[3] The one most fitting for this category is that travel impacts are affected by the magnitude of the benefit and the quality of travel options available. Mode shifts tend to be greatest if current transit use is low. In New York City, where transit commute rates are already high, transit benefits only increased transit use 16% to 23%, while in Philadelphia, transit commuting increased 32%. Similarly, only 30% of employees who received transit benefits who work in San Francisco increased their transit use, while 44% of those in other parts of the region commuted by transit more. The 44% figure was used in the SGVCOG VMT Evaluation Tool and an assumption was made of a one-to-one relationship between increased

[3] Litman, Todd. 2017. *Understanding Transport Demands and Elasticities*. Victoria Transport Policy Institute (VTPI).

transit use and reduced commute VMT. The reduction in VMT was calculated using the following formula:

% VMT reduction = % reduction in commute VMT x % of employees eligible for benefits

As shown in the SGVCOG VMT Evaluation Tool Report and discussed above, with implementation of Mitigation Measure 3.8-1, the Project-generated home-based work VMT per employee is equal to 17.38, which does not exceed the City-established threshold of 15% below the City of Irwindale average, or 19.13 home-based work VMT per employee; therefore, with implementation of this mitigation measure, the proposed Project would result in ***less than significant*** VMT impact.

MITIGATION MEASURE(S)

Mitigation Measure 3.8-1: *The Project employer shall be required to provide general commute benefits to employees, which may include financial subsidies or pre-tax deductions for transit, carpooling, and vanpooling activities. All employees shall be eligible for alternative transportation benefits.*

Impact 3.8-2: The Project would not conflict with a program, plan, ordinance, or policy addressing the circulation system, including transit, roadway, bicycle, and pedestrian facilities. (Less Than Significant)

The guests and employees of the proposed Project will have the option of driving, taking transit, walking, or bicycling to and from the proposed Project. The proposed Project was evaluated to determine if it would likely conflict with a program, plan, ordinance, or policy supporting alternative transportation (e.g., bus turnouts, bicycle racks) or generate pedestrian, bicycle, or transit travel demand that would not be accommodated by existing transit, bicycle, or pedestrian facilities and plans.

TRANSIT

As noted previously, the study area is served by the Foothill Transit and Baldwin Park Transit. Foothill Transit Routes 185/272/492 and the Baldwin Park Teal Line provide transit service along parts of Live Oak Avenue, Baldwin Park Boulevard, Arrow Highway, and Irwindale Avenue. Employees of the Project could potentially make use of the transit service; however, the number of riders would be relatively minor and spread over a number of work shifts typical of warehousing employment. It is estimated that additional transit riders could be accommodated by the existing service, spread out over the various routes and frequency of service. Further, the Project would not physically interfere with the existing bus stop that occurs at Vincent Avenue and Arrow Highway. Thus, the Project's impact on transit facilities is not considered significant.

PEDESTRIAN AND BICYCLE

There are no bicycle facilities located adjacent to or in proximity of the Project site. Buffered bike lanes/separated bikeways (Class II/IV) along Live Oak Avenue, Arrow Highway, Azusa Canyon Road,

and Irwindale Avenue are recommended in the Project vicinity as part of the City of Irwindale Bicycle Master Plan. The proposed Project would not interfere with implementation of these recommendations, as the Project does not propose to alter any of these roadways thereby removing the ability for implementation of the recommended bikeways. No impact to bicycle facilities would occur as a result of the Project.

Sidewalks currently exist along both sides of Vincent Avenue and Arrow Highway adjacent to the Project site. Controlled pedestrian crossings currently exist at the Vincent Avenue and Arrow Highway intersection. As part of the Project, Vincent Avenue along the Project site's frontage would be improved to its ultimate half-section width, including landscaping and parkway improvements, as required by the City of Irwindale. The improvements would provide continuous sidewalks adjacent to the site that would connect to existing sidewalks within the area. With planned improvements, the Project does not result in any unsafe condition for pedestrians or bicyclists and does not conflict with planned pedestrian and bicycle facilities identified in adopted plans. Thus, the Project's impact on pedestrian circulation is not considered significant.

As part of the proposed Project, the Project will improve Vincent Avenue along the Project site frontage to its ultimate half-section width, including landscaping and parkway improvements, in conjunction with development or as required by the City of Irwindale.

CONCLUSION

Overall, Project implementation would not result in significant impacts to transit, pedestrian, or bicycle facilities in the area. Therefore, the Project would have a ***less than significant*** impact on public transit, pedestrian, or bicycle facilities.

Impact 3.8-3: The Project would not substantially increase hazards due to a geometric design feature (e.g., sharp curves or dangerous intersections) or incompatible uses (e.g., farm equipment). (Less than Significant)

Access to the Project site would be provided from Vincent Avenue at the northeastern and southeastern corners of the Project site. The proposed driveways are located in the same general location as the existing driveways that are used to access the Project site. The proposed site plan does not include any sharp curves or dangerous intersections. The Project would allow for circulation and turning movements of the vehicles accessing the site. The site plan includes adequate right-of-way and turning radii for emergency vehicles within the Project site. Additionally, the site plan would be reviewed by the City of Irwindale and the Los Angeles County Fire Department to ensure the on-site circulation provides adequate access and turning radii for emergency vehicles. Sight distance at Project access driveways would comply with applicable City of Irwindale/Caltrans sight distance standards. The final grading, landscaping, and street improvement plans would demonstrate that sight distance standards are met and would be subject to City approval. Further, on-site traffic signing and striping would be implemented in conjunction with detailed construction plans for the Project. On-site traffic control plans would comply with the California Manual of

Uniform Traffic Control Devices (2014), as required and confirmed through the City's site plan review process. Overall, this is considered a ***less than significant*** impact**.**

Impact 3.8-4: The Project would not result in inadequate emergency access. (Less than Significant)

It is anticipated that emergency vehicles would be able to access the Project site using the two proposed access points along Vincent Avenue if the Project were implemented. The proposed site plan provides adequate access to the Project site, which would adequately accommodate emergency vehicles. Implementation of the proposed Project would have a less than significant impact related to emergency access, and would not interfere with an emergency evacuation plan.

Additionally, as noted in Impact 3.8-3 above, the City and the Los Angeles County Fire Department would review the site plan to ensure the on-site circulation provides adequate access and turning radii for emergency vehicles. As part of the City's review of the Project, sight distance and access driveways would be reviewed to ensure adequate sight distance is provided for vehicles existing and traveling within the site, including ensuring that the landscaping adjacent to the site would not interfere or impede visibility for travelers. Overall, this is considered a ***less than significant*** impact.

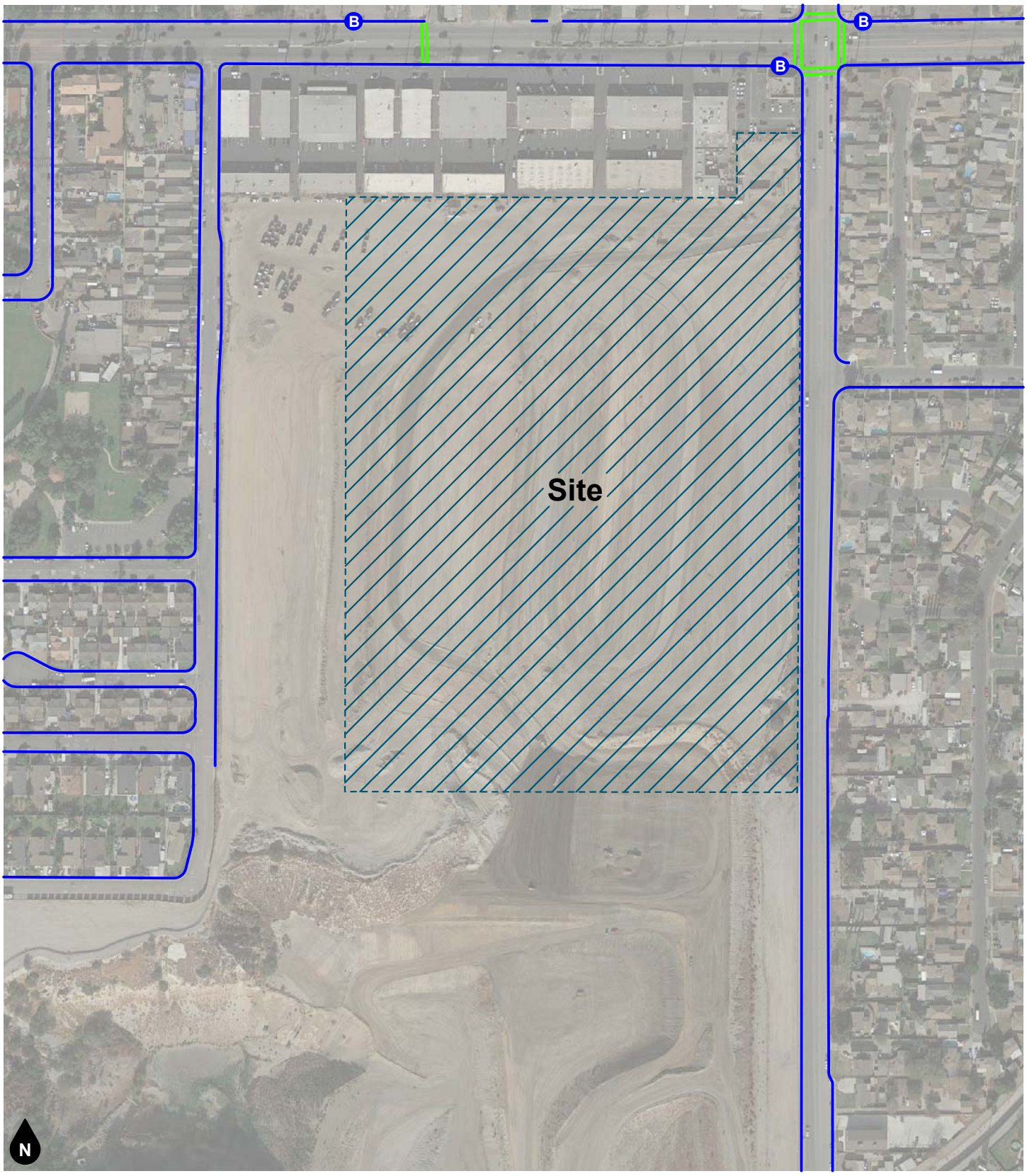

Legend
- Sidewalk
- Cross Walk
- B Bus Stop

Figure 3.8-1
Existing Pedestrian Facilities

This page intentionally left blank.

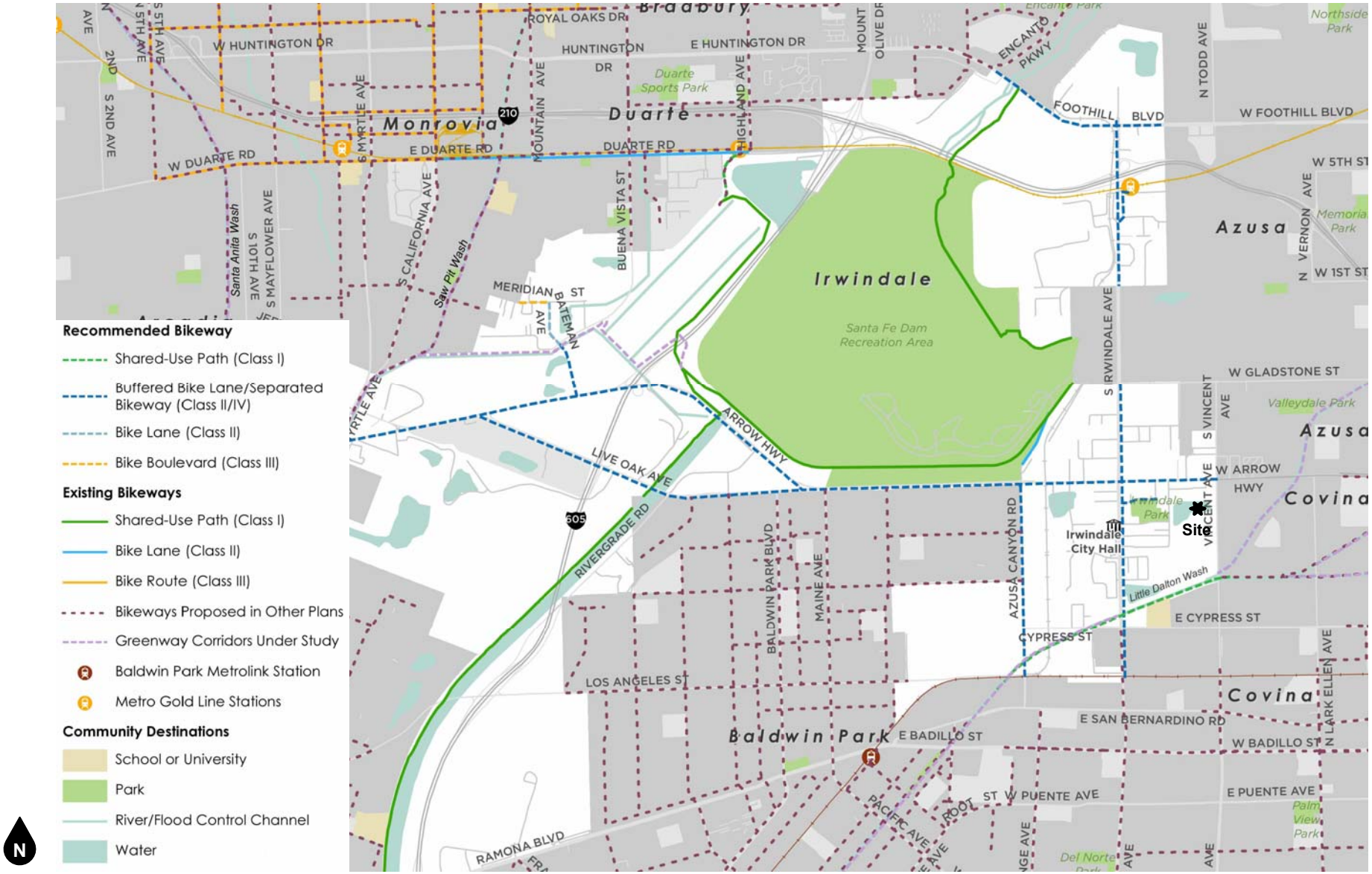

Figure 3.8-2
City of Irwindale Bicycle Master Plan

Source: City of Irwindale

This page intentionally left blank.

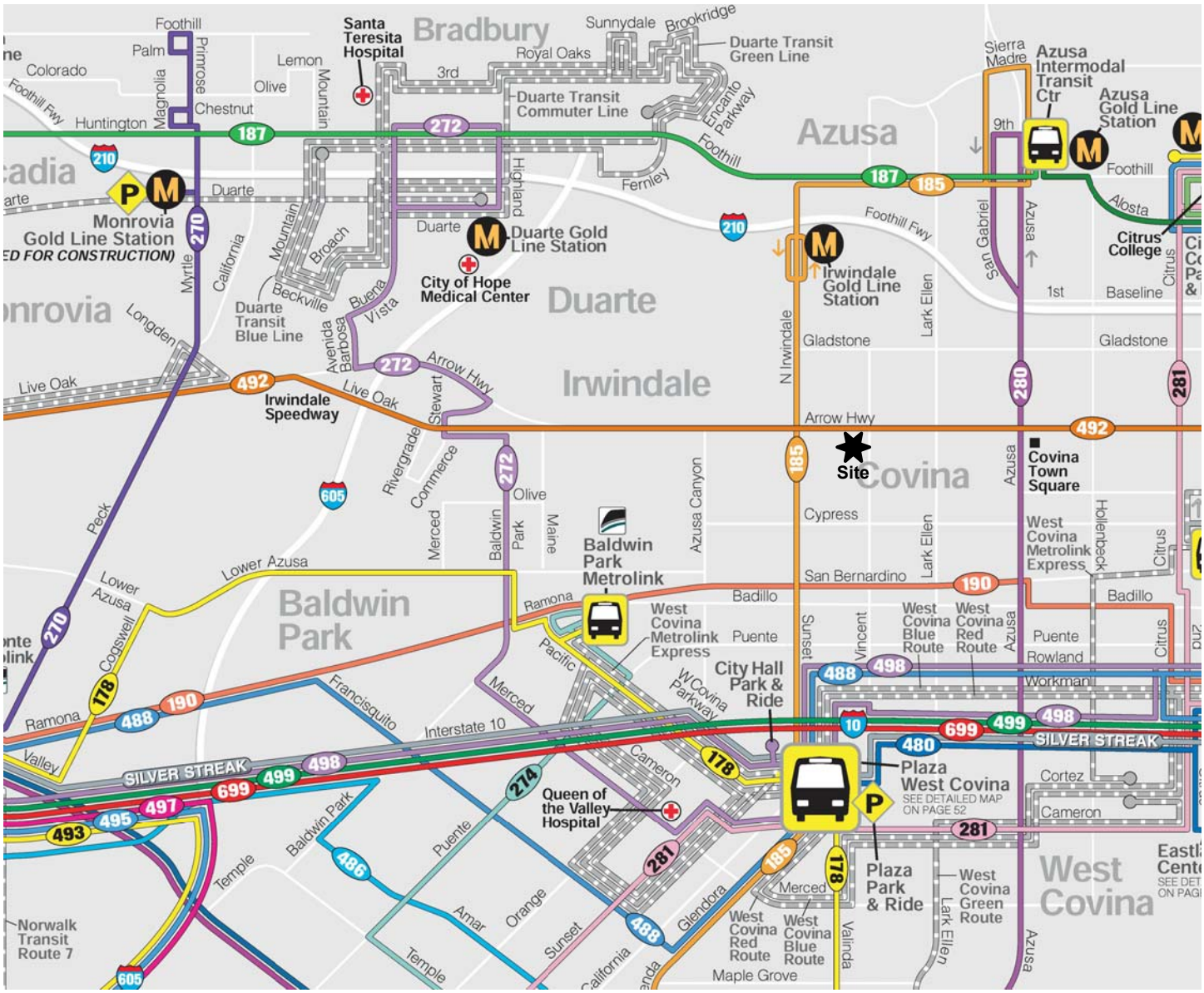

Figure 3.8-3
Transit Service Map

Source: Foothill Transit

This page intentionally left blank.

The California Environmental Quality Act (CEQA) requires an Environmental Impact Report (EIR) to evaluate a project's effects in relationship to broader changes occurring, or that are foreseeable to occur, in the surrounding environment. Accordingly, this chapter presents a discussion of CEQA-mandated analysis for cumulative impacts, significant irreversible effects, growth-inducing impacts, and significant and unavoidable impacts associated with the proposed Project.

4.1 CUMULATIVE SETTING AND IMPACT ANALYSIS

INTRODUCTION

CEQA requires that an EIR contain an assessment of the cumulative impacts that could be associated with the proposed Project. According to CEQA Guidelines Section 15130(a), "an EIR shall discuss cumulative impacts of a project when the project's incremental effect is cumulatively considerable." "Cumulatively considerable" means that the incremental effects of an individual project are considerable when viewed in connection with the effects of past projects, the effects of other current projects, and the effects of probable future projects (as defined by Section 15130). As defined in CEQA Guidelines Section 15355, a cumulative impact consists of an impact that is created as a result of the combination of the project evaluated in the EIR together with other projects causing related impacts. A cumulative impact occurs from:

> *…the change in the environment which results from the incremental impact of the project when added to other closely related past, present, and reasonably foreseeable future projects. Cumulative impacts can result from individually minor but collectively significant projects taking place over a period of time.*

In addition, Section 15130(b) identifies that the following three elements are necessary for an adequate cumulative analysis:

1) Either:

(A) A list of past, present, and probable future projects producing related or cumulative impacts, including, if necessary, those projects outside the control of the agency; or,

(B) A summary of projections contained in an adopted general plan or related planning document, or in a prior environmental document which has been adopted or certified, which described or evaluated regional or area wide conditions contributing to the cumulative impact. Any such planning document shall be referenced and made available to the public at a location specified by the lead agency.

2) A summary of the expected environmental effects to be produced by those projects with specific reference to additional information stating where that information is available; and

3) A reasonable analysis of the cumulative impacts of the relevant projects. An EIR shall examine reasonable, feasible options for mitigating or avoiding the project's contribution to any significant cumulative effects.

Where a lead agency is examining a project with an incremental effect that is not "cumulatively considerable," a lead agency need not consider that effect significant, but shall briefly describe its basis for concluding that the incremental effect is not cumulatively considerable.

CUMULATIVE SETTING

The cumulative setting uses growth projections listed in the general plan, other planning documents and Department of Finance statistics. Table 4.0-1 shows growth projections.

TABLE 4.0-1: ESTIMATED POPULATION GROWTH PROJECTIONS

CALENDAR YEAR	*IRWINDALE*	*LOS ANGELES COUNTY*	*CALIFORNIA*
2020	1,506	10,257,557	40,619,346
2035	1,800	10,368,380	45,747,645
2040	2,000	10,335,448	47,233,240

SOURCES: SOUTHERN CALIFORNIA ASSOCIATION OF GOVERNMENTS (2012), DEPARTMENT OF FINANCE (2020).

CUMULATIVE EFFECTS OF THE PROJECT

Cumulative settings are identified under each cumulative impact analysis. Cumulative settings vary because the area that the impact may affect is different. For example, noise impacts generally only impact the local surrounding area because noise travels a relatively short distance while air quality impacts affect the whole air basin as wind currents control air flow and are not generally affected by natural or manmade barriers which would affect noise. Cumulative Project impacts are addressed and summarized below.

Method of Analysis

Although the environmental effects of an individual project may not be significant when that project is considered separately, the combined effects of several projects may be significant when considered collectively. State CEQA Guidelines 15130 requires a reasonable analysis of a project's cumulative impacts, which are defined as "two or more individual effects which, when considered together are considerable or which compound or increase other environmental impacts." The cumulative impact that results from several closely related projects is: the change in the environment which results from the incremental impact of the project when added to other closely related past, present, and reasonably foreseeable probable future projects. Cumulative impacts can result from individually minor but collectively significant projects taking place over a period of time (State CEQA Guidelines 15355[b]). Cumulative impact analysis may be less detailed than the analysis of the project's individual effects (State CEQA Guidelines 15130[b]).

There are two approaches to identifying cumulative projects and the associated impacts. The list approach identifies individual projects known to be occurring or proposed in the surrounding area in order to identify potential cumulative impacts, in accordance with Section 15130(b)(1)(A) of the CEQA Guidelines. The projection approach uses a summary of projections in adopted General Plans

or related planning documents to identify potential cumulative impacts, in accordance with Section 15130(b)(1)(A) of the CEQA Guidelines. This EIR uses the projection approach for the cumulative analysis and considers the development anticipated to occur upon buildout of the various General Plans in the area, such as the Los Angeles County General Plan 2035 (adopted October 2015).

Project Assumptions

The proposed Project's contribution to environmental impacts under cumulative conditions is based on full buildout of the Project site. See Chapter 2.0, Project Description, for a complete description of the proposed Project.

Cumulative Impacts

Some cumulative impacts for issue areas are not quantifiable and are therefore discussed in general terms as they pertain to development patterns in the surrounding region. Exceptions to this are traffic, utilities, noise and air quality (the latter two of which are associated with traffic volumes), which may be quantified by estimating future traffic patterns, pollutant emitters, etc. and determining the combined effects that may result. In consideration of the cumulative scenario described above, the proposed Project may result in the following cumulative impacts.

AESTHETICS AND VISUAL RESOURCES

The cumulative setting for aesthetics and visual resources is the City of Irwindale and surrounding areas of Irwindale and Los Angeles County.

Impact 4.1: Cumulative Impacts on Aesthetics and Visual Resources (Less than Significant and Less than Cumulatively Considerable)

As described in Section 3.1, Aesthetics and Visual Resources, the Project site is not designated as a scenic vista by the City of Irwindale General Plan or the Los Angeles County General Plan, nor does it contain any unique or distinguishing features that would qualify the site for designation as a scenic vista. The Project site is located in an urbanized area. According to the City's General Plan, there are no scenic vistas within the Project area. The San Gabriel Mountains, located approximately 20 miles to the north of the Project site, are an important part of the local scenery. However, views of the San Gabriel Mountains from the Project site are limited and obstructed by existing surrounding urban development. Limited distant views of the San Gabriel Mountains are available from the Project site and roadways adjacent to the Project site. They occur in the background with foreground and middleground views consisting of development immediately adjacent to the Project site and within the surrounding area. Additionally, existing views in this urban and developed area are limited. As such, the Project would not result in effects on scenic vistas.

Future projects within Irwindale, Los Angeles County, and nearby cities would be subject to the regulations pertaining to scenic vistas and views established by the individual jurisdictions. These regulations are designed to minimize impacts of new development on scenic vistas and views. Implementation of these regulations would ensure that future projects minimize their potential scenic vista impacts.

According to the U.S. Bureau of the Census, the Project site is mapped and designated as urbanized area. In addition, the Project site is located within the City of Irwindale, which is located in the greater urban area of Los Angeles County which has an estimated population of approximately 39 million people; meaning the Project site is within an urbanized area and subjected to applicable zoning or other regulations governing scenic quality. Future development of the Project site would convert the Project site from its existing state to an industrial warehouse.

The Project is consistent with the City's Design Guidelines and the City's design review ordinance. Development within the Project site is required to be consistent with the General Plan and the Irwindale Zoning Ordinance which includes design standards in order to ensure quality and cohesive design of the Project site. These standards include specifications for building height, massing, and orientation; exterior lighting standards and specifications; and landscaping standards. Implementation of the design standards would ensure quality design throughout the Project site, and result in a Project that would be internally cohesive while maintaining aesthetics similar to surrounding uses.

Compliance with the Commercial and Industrial Design Guidelines and development standards for Irwindale's Zoning District's for height and bulk, and landscaping requirements found in the Zoning code, would reduce visual impacts to the greatest extent feasible. While the proposed Project would permanently convert the vacant land to urbanized uses, the Project site is designated for and consistent with industrial and urban uses established by the General Plan. Future development projects in the Project vicinity and Los Angeles County would be subject to the applicable zoning and other regulations governing scenic quality within an urbanized area.

Implementation of the lighting plan required by Mitigation Measure 3.1-1 would ensure that lighting features do not result in light spillage onto adjacent properties and do not significantly impact views of the night sky. Adherence to the proposed development standards and the subsequent design review of the Project would ensure that excessively reflective building materials are not used, and that the proposed Project would not result in significant impacts related to daytime glare. Future projects within Irwindale, Los Angeles County, and nearby cities would be subject to the light and glare standards established by the individual jurisdictions. These regulations are designed to minimize potential light and glare impacts of new development. Implementation of these regulations would ensure that future projects minimize their potential light and glare impacts.

Overall, impacts related to aesthetics and visual resources would be a **less than cumulatively considerable contribution**, and no mitigation is required.

AIR QUALITY

The cumulative setting for air quality impacts is the South Coast Air Basin (SCAB or Basin), which includes the southern two-thirds of Los Angeles County, all of Orange County, and the western urbanized portions of Riverside and San Bernardino counties.

Impact 4.2: Cumulative Impact on the Region's Air Quality (Cumulatively Considerable and Significant and Unavoidable)

Under buildout conditions in Los Angeles County, the SCAB would continue to experience increases in criteria pollutants and efforts to improve air quality throughout the basin would be hindered. As described in Section 3.2, Los Angeles County has a state designation of nonattainment for ozone, fine particulate matter (PM_{10}), and respirable particulate matter ($PM_{2.5}$) and is either unclassified or attainment for all other criteria pollutants. The County has a national designation of nonattainment for ozone and $PM_{2.5}$. Table 3.2-2 in Section 3.2 presents the State and Federal attainment status for Los Angeles County.

As discussed under Impact 3.2-2 in Section 3.2, the proposed Project would result in increased emissions primarily from vehicle miles travelled associated with Project implementation. The South Coast Air Quality Management District (SCAQMD) has established operation-related emissions thresholds of significance and it was determined that daily emissions of reactive organic compounds (ROG), PM_{10}, $PM_{2.5}$, sulfur oxides (SOx), and carbon monoxide (CO) resulting from Project buildout would not exceed the SCAQMD thresholds of significance. However, the emissions threshold for nitrogen oxides (NOx) would be exceeded, primarily due to the generation of heavy-duty trucks as part of the proposed Project.

Implementation of CARB and SCAQMD recommendations in Mitigation Measure 3.2-1 would be required. However, even with the implementation of identified mitigation, Project-related heavy-duty truck travel would result in SCAQMD daily significance thresholds being exceeded. This results in a cumulatively considerable net increase of NOx (an ozone precursor), for which the Project region is in nonattainment under an applicable federal or state ambient air quality standard.

In addition to regional significance thresholds, the SCAQMD developed localized significance thresholds (LSTs) for emissions of NO_2, CO, PM_{10}, and $PM_{2.5}$ generated at new development sites (offsite mobile source emissions are not included in the LST analysis protocol). LSTs represent the maximum emissions that can be generated at a Project site without expecting to cause or substantially contribute to an exceedance of the most stringent national or State ambient air quality standards. LSTs are based on the ambient concentrations of that pollutant within the Project source receptor area (SRA), as demarcated by the SCAQMD, and the distance to the nearest sensitive receptor.

According to the SCAQMD localized significance threshold methodology, LSTs would apply to the operational phase of a proposed Project only if the Project includes stationary sources or attracts mobile sources that may spend long periods queuing and idling at the site (e.g., warehouse or transfer facilities). The proposed Project includes one 545,735-sf warehouse. Therefore, in the case of the Proposed Project, the operational phase LST protocol is applied. Operational LSTs apply to CO, NO_2, PM_{10}, and $PM_{2.5}$. As shown in Table 3.2-6, the emissions of these pollutants on the peak day of operations would not result in significant concentrations of pollutants at nearby sensitive receptors.

Although implementation of the proposed Project would not generate significant concentrations of pollutants at nearby sensitive receptors, the proposed Project is expected to exceed the SCAQMD mass threshold for operational NOx, as modelled. Mitigation is provided to reduce emissions to the maximum extent feasible. However, even after implementation of these mitigation measures, operation of the Project would have a significant and unavoidable impact related to the potential to expose sensitive receptors to substantial pollutant concentrations or result in a cumulatively considerable net increase of any criteria pollutant for which the Project region is in nonattainment.

Additionally, as discussed in Impact 3.2-3, construction-generated emissions are temporary and short-term but have the potential to represent a significant air quality impact. Predicted maximum daily construction-generated emissions for the proposed Project are summarized in Table 3.2-7. As shown, emissions generated during Project construction would not exceed the SCAQMD's regional thresholds of significance. Therefore, criteria pollutant emissions generated during Project construction would not result in a cumulatively considerable net increase of any criteria pollutant for which the Project region is nonattainment under an applicable federal or state ambient air quality standard. Further, as discussed in Impact 3.2-3, diesel emissions generated during the construction of the Project could impact sensitive receptors within the Project area. As shown in Table 3.1-9, maximum air pollutant emissions resulting from Project construction would not result in significant concentrations of pollutants at nearby sensitive receptors. Therefore, impacts concerning LSTs during construction activities would be less than significant.

The increases in criteria pollutants generated by the proposed Project when combined with the existing criteria pollutants emitted regionally, would affect people, especially those with impaired respiratory systems located in the immediate vicinity of the Project site. Construction emissions would be temporary in nature, while the operational activities of a Project would be most likely to cause substantial adverse effects on human beings, since ongoing, chronic, and lifetime exposure to criteria pollutants are key in the level of health impact. However, the increases of these pollutants generated by the proposed Project are not on their own likely to generate an increase in the number of days exceeding the health-based national or state air quality standards, based on the size of the Project in comparison to Los Angeles County as a whole. Nevertheless, even with implementation of the mitigation measures provided in this section (Mitigation Measures 3.1-1 and 3.1-2), operational NOx emissions would be above the applicable SCAQMD mass emission threshold.

Overall, implementation of the proposed Project would have a **cumulatively considerable contribution** and **significant and unavoidable** impact from air emissions.

GEOLOGY AND SOILS

Impacts related to geology and soils are not inherently cumulative. Geology and soils concerns are related to risks, hazards or development constraints that are largely site-specific. However, seismic hazards are regional, and management of seismic hazards is vested with the local planning and building authority. For these reasons, the potential for cumulative geology and soils impacts are considered in the context of the City of Irwindale and vicinity.

Impact 4.3: Cumulative Impact on Geologic and Soils Resources (Less than Significant and Less than Cumulatively Considerable)

As discussed in Section 3.3, Geology and Soils, the Project site does not have a significant risk of becoming unstable as a result landslide, subsidence, or soil collapse. There is a potential for liquefaction, liquefaction induced settlement, and lateral spreading, of the underlaying soils. Additionally, although engineered artificial fills occur within the Project Site, seismic hazard zoning for expansive soils of the Project site is governed by the expansive susceptibility of natural soils underlying the fill sites. According to the NRCS Web Soil Survey, the soils in the Project site have a low shrink-swell potential. The NRCS Web Soil Survey indicates that near surface soils within the Project site have low plasticity, and the expansion potential of the soils would respond to fluctuations in moisture content. However, Mitigation Measure 3.3-1 provided in Section 3.3 would ensure this impact will be less than significant.

Due to the site's location within the seismically active region of southern California, the Project site is expected to experience seismic ground shaking during the life of the proposed Project. There will always be a potential for groundshaking caused by seismic activity anywhere in California, including the Project site. Seismic activity could come from a known active fault such as the Montebello fault, the Chino fault, the Cucamonga fault, and the San Gabriel fault, or any number of other faults in the region. In order to minimize potential damage to the buildings and site improvements, all construction in California is required to be designed in accordance with the latest seismic design standards of the California Building Code. The California Building Code, Title 24, Part 2, Chapter 16 addresses structural design and Chapter 18 addresses soils and foundations. Collectively, these state requirements, which have been adopted by the City of Irwindale, include design standards and requirements that are intended to minimize impacts to structures in seismically active areas of California. Section 1613 specifically provides structural design standards for earthquake loads. Section 1803.5.11 and 1803.5.12 provide requirements for geotechnical investigations for structures assigned varying Seismic Design Categories in accordance with Section 1613. Design in accordance with these standards and policies would reduce any potential impact to a less than significant level.

Geologic and soils impacts tend to be site-specific and Project-specific. With the mitigation measure presented in Section 3.3, implementation of the proposed Project would not result in increased risks or hazards related to geologic conditions in the cumulative setting area, nor would it result in any off-site or indirect impacts. Implementation of the proposed Project would have a **less than significant** cumulative impact relative to this environmental topic. As such, impacts related to geologic and soil resources would result in a l**ess than cumulatively considerable contribution**.

GREENHOUSE GASES, CLIMATE CHANGE AND ENERGY

The cumulative setting for greenhouse gas (GHG) emissions and climate change impacts for this analysis is Los Angeles County, which is the boundary for the California Air Resources Board's regional GHG emissions reduction targets.

Impact 4.4: Cumulative Impact on Climate Change from Increased Project-Related Greenhouse Gas Emissions (Less than Significant and Less than Cumulatively Considerable)

GHG emissions from a single Project will not cause global climate change; however, GHG emission from multiple projects throughout a region or state could result in a cumulative impact with respect to global climate change.

In California, there has been extensive legislation passed with the goal of reducing GHG emissions. The legislative goals are as follows: 1) 2000 levels by 2010, 2) 1990 levels by 2020 and 3) 80 percent below the 1990 levels by the year 2050. To achieve these goals, the CARB has developed regional GHG emission reduction targets for the automobile and light truck sectors (the largest single source of GHG emissions) for 2020 and 2035. The regional GHG emission reduction targets for each region in California were established by the California Air Resources Board.

To date, neither the City of Irwindale, nor any regional agency has prepared a qualified GHG reduction plan that is applicable to the proposed Project. However, Irwindale is a member city of the Southern California Association of Governments (SCAG). SCAG's 2016–2040 Regional Transportation Plan/Sustainable Communities Strategy (RTP/SCS), adopted April 7, 2016, is a long-range visioning plan that balances future mobility and housing needs with economic, environmental, and public health goals. The RTP/SCS establishes GHG emissions goals for automobiles and light-duty trucks for 2020 and 2035 and establishes an overall GHG target for the region consistent with both the Statewide GHG-reduction targets for 2020 and the post-2020 statewide GHG reduction goals. The 2016 RTP/SCS contains over 4,000 transportation projects, including highway improvements, railroad grade separations, bicycle lanes, new transit hubs, and replacement bridges. These future investments were included in county plans developed by the six-county transportation commissions and seek to reduce traffic bottlenecks, improve the efficiency of the region's network, and expand mobility choices. The RTP/SCS is an important planning document for the region, allowing project sponsors to qualify for federal funding. In addition, the RTP/SCS is supported by a combination of transportation and land use strategies that help the region achieve state GHG emission reduction goals and federal CAA requirements, preserve open space areas, improve public health and roadway safety, support the vital goods movement industry, and use resources more efficiently. The proposed Project would not conflict with the stated goals of the RTP/SCS.

The proposed Project's short-term construction-related and long-term operational GHG emissions were estimated using the California Emission Estimator Model (CalEEMod)^{TM} (v.2016.3.2). As shown in Table 3.4-1, Project construction would result in the generation of approximately 2,831.5 metric tons of CO_2e over the course of construction. Once construction is complete, the generation of these GHG emissions would cease. The amortized construction emissions are added to the annual average operational emissions. As shown in Table 3.4-2, operational-generated emissions would not exceed the SCAQMD's numeric bright-line threshold of 10,000 metric tons of CO_2e annually. Nevertheless, out of an abundance of caution, the proposed Project would be required to implement Mitigation Measure 3.4-1, which include CARB and SCAQMD-recommended measures to reduce GHG emissions through the implementation of solar and energy-conserving systems, landscaping, and use of light colored paving and roofing materials. Therefore, with implementation of CARB and

SCAQMD recommendations contained in mitigation measure 3.4-1, Project-related heavy-duty truck travel emissions would be reduced beyond those emissions identified in Table 3.4-2.

Overall, impacts related to GHG and climate change would result in a l**ess than cumulatively considerable contribution**.

HAZARDS AND HAZARDOUS MATERIALS

The cumulative context for the analysis of cumulative hazards and human health impacts is Los Angeles County, including all cumulative growth therein, as represented by full implementation of each respective General Plan (i.e. Irwindale, Irwindale, and Los Angeles County). As discussed in Section 3.5, Hazards and Hazardous Materials, implementation of the proposed Project would not result in any significant impacts related to this environmental topic with the implementation of the mitigation measures provided in Section 3.5.

Impact 4.5: Cumulative Impact Related to Hazards and Hazardous Materials (Less than Significant and Less than Cumulatively Considerable)

The proposed Project, in conjunction with cumulative development in the region, would include areas designated for a variety of urban, agricultural, and open space uses as defined by the applicable General Plan. Cumulative development would include continued operation of, or development of, new facilities as allowed under each land use designation. New development would inevitably increase the use of hazardous materials within the region, resulting in potential health and safety effects related to hazardous materials use. For the most part, potential impacts associated with new and future development would be confined to commercial and industrial areas and would not involve the use of hazardous substances in large quantities or that would be particularly hazardous. Incidents, if any, would typically be site specific and would involve accidental spills or inadvertent releases. Associated health and safety risks would generally be limited to those individuals using the materials or to persons in the immediate vicinity of the materials and would not combine with similar effects elsewhere (i.e., construction workers). Hazard-related impacts tend to be site-specific and Project-specific. The Project site is not associated with any existing hazardous materials spills; however, there are numerous areas throughout the County where hazardous conditions are present.

Implementation of the proposed Project would not result in significant increased risks of hazards in the cumulative setting area, nor would it result in any significant off-site or indirect impacts. Mitigation measures have been included to reduce the risk of on-site hazards associated with the use of on-site hazardous materials. Implementation of the proposed Project would have a **less than significant** cumulative impact relative to this environmental topic. As such, impacts related to hazards and hazardous materials would result in a l**ess than cumulatively considerable contribution**.

HYDROLOGY AND WATER QUALITY

Potential cumulative issues associated with surface waters can be addressed on a watershed basis, or in the case of groundwater, in the context of a groundwater basin. Because water resources are

highly interconnected, the cumulative setting is based on Los Angeles County which is located in the Los Angeles Region. Cumulative development in this region, including the proposed Project, would impact the water quality and hydrological features of the Los Angeles Region. The City of Irwindale and much of the surrounding area is located in the Main San Gabriel Basin (MSGB). The Project site is in the Walnut Creek Sub-Watershed within the Upper San Gabriel River Watershed, which is part of San Gabriel River Water Management Area (WMA). Any matter that may affect water quality draining from the Project site will eventually end up in the groundwater basin.

Impact 4.6: Cumulative Impact Related to Hydrology and Water Quality (Less than Significant and Less than Cumulatively Considerable)

The long-term operations of the proposed Project (all phases) could result in long-term impacts to surface water quality from urban stormwater runoff. The proposed Project would result in increased impervious area at the site as a result of the proposed development, which could increase peak stormwater runoff rates and volumes on and downstream on the Project site. However, the proposed Project includes an extensive system of on-site stormwater collection facilities to accommodate the increased stormwater flows that would originate in the Project site.

In order to meet the City of Irwindale and County of Los Angeles storm water quality requirements, a combination of a rain garden and/or underground infiltration/detention system will be utilized as low impact development (LID) treatment devices to treat the low-flow. The underground infiltration/detention system will be located within an area (50-feet wide, eight-feet high, and 653-feet long) on the west side of the property. The rain garden areas will be located throughout the site, mainly around the perimeter. Within subarea 2A, the low flow will discharge into the LID treatment device rain garden via curb openings and then directed into the underground infiltration/detention system via infiltration. Subarea 1A will be directed to and treated by the proposed underground infiltration/detention system via underground storm drain pipe. The owner of the property will privately maintain the on-site drainage system, which would consist of catch basin, curb drains, and infiltration/detention system. The proposed storm drains and infiltration/detention system has been designed to convey the required flow rates and will comply with the flood protection and storm water quality requirements of the City of Irwindale and County of Los Angeles. Thus, construction and operation of the proposed storm drain facilities would ensure that storm water would be conveyed and treated prior to outletting to the regional storm drain system, resulting in less than significant impacts to water quality. With the design and construction of these stormwater improvements, the proposed Project would not increase peak stormwater runoff.

Construction of the proposed Project would contribute to a cumulative increase in urban pollutant loading, which could adversely affect water quality. The proposed Project will be required to comply with Mitigation Measure 3.6-1 (which is identical to Mitigation Measure Geo-1 from Section VII, Geology and Soils, of the Initial Study) which requires the development and approval of a Stormwater Pollution Prevention Plan (SWPPP). The SWPPP will include Best Management Practices (BMPs) to regulate stormwater quality for the Project site which will be designed in accordance with the City of Irwindale's National Pollutant Discharge Elimination System Permit (NPDES) issued by the RWQCB. While there are no assurances that other projects in the County would incorporate the

same degree or methods of treatment as the proposed Project, each project that would discharge stormwater runoff would be required to comply with NPDES discharge permits from the RWQCB, which adjusts requirements on a case-by-case basis to avoid significant degradation of water quality. Therefore, the associated surface water quality impacts would be expected to be less than significant because of improved or similar quality of runoff compared to existing conditions.

The proposed Project would result in new impervious surfaces and could reduce rainwater infiltration and groundwater recharge. As stated, the Project site is located within the MSGB, and will be provided water service by Azusa Light & Water (ALW). In accordance with the requirements of Section 28 of its Rules and Regulations, the Five-Year Water Quality and Supply Plan develops projections of future groundwater supply and quality and outlines how the MSGB Watermaster plans to maintain the Key Well elevation between 200 feet and 250 feet, to the extent possible. According to the MSGB Watermaster website, the groundwater level at Baldwin Park Key Well is at 209.4 feet as of February 28, 2020. ALW can expect to meet the needs of its customers through 2040 and as sufficient capacity to handle the increased water demand from the proposed Project. Additionally, as discussed in Section 3.6, the recharge basin located south of the Project site will remain intact and will not be impacted by development of the proposed Project. The proposed Project would not cause the substantial depletion of groundwater supplies or interfere substantially with groundwater recharge such that the project may impede sustainable groundwater management of the basin.

As shown on Figure 3.6-2, the Project site is not within a 100-year flood zone as delineated by FEMA. The Project site is not located within the 200-year floodplain as delineated on the most recent 200-year flood plain maps for Irwindale. Additionally, the Project site is not located in an area with the potential for tsunami inundation or within an area with a control levee. Further, as shown in Figure 3.6-3, the Project site is located within a dam inundation area for the San Gabriel No. 1 Dam. Due to the size of this dam, it is regulated by California Dam Safety Act, which is implemented by the California Department of Water Resources, Division of Safety of Dams (DSD). The DSD is responsible for inspecting and monitoring the dam in perpetuity. The proposed Project would not result in actions that could result in a higher likelihood of dam failure at the San Gabriel No. 1 Dam. There will always be a remote chance of dam failure that results in flooding of the City of Irwindale, including the Project site. However, given the regulations provided in the California Dam Safety Act, and the ongoing monitoring performed by the DSD, the risk of loss, injury, or death to people or structures from dam failure at the proposed Project site would be negligible, and no impact would result.

Implementation of the proposed Project would have a **less than significant** and **less than cumulatively considerable** impact relative to this topic.

NOISE

The cumulative setting for noise impacts consists of the existing and future noise sources that could affect the Project site or surrounding uses.

Impact 4.7: Cumulative Impact Related to Noise (Less than Significant and Less than Cumulatively Considerable)

The cumulative context for noise impacts associated with the proposed Project consists of the existing and future noise sources that could affect the Project or surrounding uses. Noise generated by construction would be temporary, and would not add to the permanent noise environment or be considered as part of the cumulative context. The total noise impact of the proposed Project would be fairly small and would not be a substantial increase to the existing future noise environment.

Cumulative noise impacts would occur primarily as a result of increased traffic on local roadways due to the proposed Project and on-site activities resulting from operation of the proposed Project. Table 3.7-9 in Section 3.7, Noise, shows cumulative traffic noise levels with and without the proposed Project. As discussed in Section 3.7, the Project would not result in significant increases in traffic noise levels at existing sensitive receptors under the Cumulative Plus Project Condition. Additionally, increases in non-traffic noise levels, such as loading dock and parking lot noise, would not be significant.

Implementation of the proposed Project would have a **less than significant** and **less than cumulatively considerable** impact relative to this topic.

TRANSPORTATION AND CIRCULATION

The cumulative setting for transportation and circulation impacts consists of the existing and future trip generation sources that could affect the Project site or surrounding roadways.

Impact 4.8: Cumulative Impact Related to Transportation and Circulation (Less than Significant and Less than Cumulatively Considerable)

As discussed in Section 3.8, Transportation and Circulation, cumulative VMT impacts are measured using two criteria. Based on the City-adopted thresholds, a "yes" to any of the following applicable criteria would indicate a significant cumulative VMT impact for the proposed Project:

- **Cumulative Impact:** Would the Project increase the total regional VMT compared to cumulative no Project conditions?
- **Cumulative Impact:** Is the Project inconsistent with the Southern California Association of Governments (SCAG) Regional Transportation Plan/Sustainable Communities Strategies (RTP/SCS)?

The State's Technical Advisory notes that a project's cumulative impacts are based on an assessment of whether the ""incremental effects of an individual project are considerable when viewed in connection with the effects of past projects, the effects of other current projects, and the effects of probable future projects." (Pub. Resources Code, § 21083, subd. (b)(2); see CEQA Guidelines, § 15064, subd. (h)(1).)" The Technical Advisory further clarifies that a project that falls below an efficiency-based threshold (such as VMT per employee) that is aligned with long-term environmental goals and relevant plans would have no cumulative impact distinct from the project impact. Accordingly, a finding of a less than significant project impact would imply a less than significant cumulative impact, and vice versa. With implementation of Mitigation Measure 3.8-1

included in Section 3.8, the Project is forecast to generate VMT that is 15% below the City of Irwindale average. Therefore, the Project would not increase the total regional VMT.

Additionally, the SCAG 2020-2045 RTP/SCS was developed with input from all 197 local jurisdictions, including the City of Irwindale. The information used to develop the RTP/SCS includes the current land use, socio-economic demographics, and sustainability practices and is documented in a Data Map/Book for each jurisdiction. The Data Map/Book illustrates that the Project site is designated as "Industrial" land use in the 2016 SCAG Land Use Codes. Therefore, the proposed Project is consistent with the SCAG RTP/SCS. Overall, cumulative VMT impacts associated with the Project would be less than significant and less than cumulatively considerable.

The Project area is served by Foothill Transit and Baldwin Park Transit. Foothill Transit Routes 185/272/492 and the Baldwin Park Teal Line provide transit service along parts of Live Oak Avenue, Baldwin Park Boulevard, Arrow Highway, and Irwindale Avenue. Employees of the Project could potentially make use of the transit service; however, the number of riders would be relatively minor and spread over a number of work shifts typical of warehousing employment.

As part of the Project, Vincent Avenue along the Project site's frontage would be improved to its ultimate half-section width, including landscaping and parkway improvements, as required by the City of Irwindale. The improvements would provide continuous sidewalks adjacent to the site that would connect to existing sidewalks within the area. With planned improvements, the Project does not result in any unsafe condition for pedestrians or bicyclists and does not conflict with planned pedestrian and bicycle facilities identified in adopted plans. Thus, the Project's impact on pedestrian circulation is not considered significant.

Additionally, the proposed site plan does not include any sharp curves or dangerous intersections. The Project would allow for circulation and turning movements of the vehicles accessing the site. The site plan includes adequate right-of-way and turning radii for emergency vehicles within the Project site. The site plan would be reviewed by the City of Irwindale and the Los Angeles County Fire Department to ensure the on-site circulation provides adequate access and turning radii for emergency vehicles. Sight distance at Project access driveways would comply with applicable City of Irwindale/Caltrans sight distance standards. The final grading, landscaping, and street improvement plans would demonstrate that sight distance standards are met and would be subject to City approval. Further, on-site traffic signing and striping would be implemented in conjunction with detailed construction plans for the Project. On-site traffic control plans would comply with the California Manual of Uniform Traffic Control Devices (2014), as required and confirmed through the City's site plan review process.

Implementation of the proposed Project would have a **less than significant** and **less than cumulatively considerable** impact relative to this topic.

4.2 SIGNIFICANT IRREVERSIBLE EFFECTS

LEGAL CONSIDERATIONS

CEQA Section 15126.2(c) and Public Resources Code Sections 21100(b)(2) and 21100.1(a), require that the EIR include a discussion of significant irreversible environmental changes which would be involved in the proposed action should it be implemented. Irreversible environmental effects are described as:

- The project would involve a large commitment of nonrenewable resources;
- The primary and secondary impacts of a project would generally commit future generations to similar uses (e.g., a highway provides access to previously remote area);
- The project involves uses in which irreversible damage could result from any potential environmental accidents associated with the project; or
- The phasing of the proposed consumption of resources is not justified (e.g., the project involves the wasteful use of energy).

Determining whether the proposed Project would result in significant irreversible effects requires a determination of whether key resources would be degraded or destroyed such that there would be little possibility of restoring them. Irretrievable commitments of resources should be evaluated to assure that such current consumption is justified.

Analysis

Implementation of the proposed Project would result in the conversion of 26.05 acres of land currently undeveloped but previously used for mining uses for the development of industrial uses. Development of the proposed Project would constitute a long-term commitment to these uses. It is unlikely that circumstances would arise that would justify the return of the land to its original condition as a mining pit.

A variety of resources, including land, energy, water, construction materials, and human resources would be permanently committed for the initial construction, infrastructure installation and connection to existing utilities, and its continued maintenance. Construction of the proposed Project would require the commitment of a variety of other non-renewable or slowly renewable natural resources such as lumber and other forest products, sand and gravel, asphalt, petrochemicals, and metals.

Additionally, a variety of resources would be committed to the ongoing operation and life of the proposed Project. The introduction of industrial high cube warehouse uses to the Project site will result in an increase in area traffic over existing conditions. Fossil fuels are the principal source of energy and the proposed Project will increase consumption of available supplies, including gasoline and diesel. These energy resource demands relate to initial Project construction, Project operation and site maintenance and the transport of people and goods to and from the Project site.

4.3 GROWTH-INDUCING IMPACTS

Section 15126.2(d) of the CEQA Guidelines requires an EIR to "discuss the ways in which the project could foster economic or population growth, or the construction of additional housing, either directly or indirectly, in the surrounding environment. Included in this are projects which would remove obstacles to population growth..." In general terms, a project may result in a significant growth inducing impact if it individually or cumulatively with other projects results in any of the actions described in the following examples:

- The project removes an obstacle to growth, such as: the establishment of an essential public service, the provision of new access to an area, or a change in zoning or general plan designation.
- The project results in economic expansion, population growth or the construction of additional housing occurs in the surrounding environment in response to the project, either directly or indirectly.

Existing storm drain, sewer, water, and gas lines/pipes are currently located along Vincent Avenue and Allen Drive. The Project would be served by existing sewer, water and other utility services that have been established on the Project site and in the Project area. Access to the Project would be provided by existing roads and no road improvements would be required to obtain access to the Project site. Therefore, the proposed Project would not require an extension of public services that have the potential to result in or facilitate unplanned growth in the Project area.

The proposed Project would provide employment opportunities for City and County residents on a site that has been planned for redevelopment by the City for decades. The City of Irwindale General Plan specifically addresses development of the Manning Pit, a portion of which is the Project site. Construction of the proposed warehouse would alleviate pressure to provide industrial warehouses in an area of the City that is currently vacant and undeveloped. Overall, the additional industrial uses in the City would not have the long-term effect of inducing population growth.

The Project would result in an increase in employment opportunities by creating full-time job positions. The Project would also generate short-term construction employment opportunities, but these opportunities would not result in substantial population growth in the project region. Therefore, the proposed Project would not result in significant growth inducing impacts.

4.4 SIGNIFICANT AND UNAVOIDABLE IMPACTS

CEQA Guidelines Section 15126.2(b) requires an EIR to discuss unavoidable significant environmental effects, including those that can be mitigated but not reduced to a level of insignificance. The following significant and unavoidable impacts of the proposed Project are discussed in Sections 3.1 through 3.8 and previously in this chapter (cumulative-level). Refer to those discussions for further details and analysis of the significant and unavoidable impact identified below:

- Impact 3.2-1: The proposed Project has the potential to conflict with or obstruct implementation of the applicable air quality plan.
- Impact 3.2-2: Proposed Project operation has the potential to expose sensitive receptors to substantial pollutant concentrations or result in a cumulatively considerable net increase of any criteria pollutant for which the Project region is in nonattainment under an applicable federal or state ambient air quality standard.
- Impact 3.2-5: The proposed Project has the potential cause substantial adverse effects on human beings, either directly or indirectly.
- Impact 4.2: Cumulative Impact on the Region's Air Quality.

5.1 CEQA REQUIREMENTS

The California Environmental Quality Act (CEQA) requires that an Environmental Impact Report (EIR) analyze a reasonable range of feasible alternatives that meet most or all project objectives while reducing or avoiding one or more significant environmental effects of the project. The range of alternatives required in an EIR is governed by a "rule of reason" that requires an EIR to set forth only those alternatives necessary to permit a reasoned choice (CEQA Guidelines Section 15126.6[f]). Where a potential alternative was examined but not chosen as one of the range of alternatives, the CEQA Guidelines require that the EIR briefly discuss the reasons the alternative was dismissed.

PROJECT OBJECTIVES

The principal objective of the proposed Project is the approval and subsequent implementation of the 5175 Vincent Avenue Project (the proposed Project). The principal objective of the proposed Project is the approval and subsequent development of the 26.05-acre parcel for Industrial uses. The quantifiable objectives of the proposed Project include the development of 26.05 acres with a 545,735 square-foot industrial warehouse building.

The proposed Project identifies the following objectives:

- Quantified Development: Development of land use densities and intensities at quantities that maximize the use of the land as a single development to meet the demands of the market while considering zoning and land uses restrictions. The quantifiable objectives include the development of approximately to 26.05 acres with a 545,735 square-foot industrial warehouse that provides employment-generating development.
- Economic Contribution: Strengthen the City's economic base through Project's job creation; development related investment; disposable income from future employees; and increased property, sales, and transient occupancy taxes.
- Employment Opportunities: Provide for local and regional employment opportunities that take advantage of the areas high level of accessibility, allow for the expansion of the City's economic base, help create a jobs/housing balance, and reduce the commute for local residents.
- Public Facilities and Services: Provide infrastructure and services that meet City standards, integrate with existing and planned facilities and connections and do not diminish services to existing residents of the City.
- Marketable High Cube Warehouse: Provide for the construction of a high-cube warehouse facility that could attract a variety of end users, including transload facility, short-term storage facility, light industrial, and/or manufacturing uses. The facility should be designed with efficient transportation access and circulation within the site, accessible loading bays on two sides of the building, and a high level of on-site automation and logistics management to enable highly-efficient processing of goods through the high-cube warehouse.

- End User Restrictions: Restrict the use of the warehouse building such that no business would be able to operate a fulfillment center, parcel hub, or cold storage facility. The intent of this restriction is to minimize the potential air quality impacts from such end users.
- Buffer Surrounding Uses: Provide a landscaped buffer with sound attenuation along Vincent Avenue to buffer neighboring uses.
- Redevelopment of the Manning Pit: With the completed remediation and closure of the Manning Pit, provide for redevelopment of the site in accordance with the General Plan, such that the site can be utilized in a manner that provides jobs and provides a tax base for the community.

ALTERNATIVES NOT SELECTED FOR FURTHER ANALYSIS

A Notice of Preparation was circulated to the public to solicit recommendations for a reasonable range of alternatives to the proposed Project. Additionally, a public scoping meeting was held during the public review period to solicit recommendations for a reasonable range of alternatives to the proposed Project. A Project alternative which provides for multiple smaller warehouse buildings instead of one building was suggested by the general public during the NOP public review process. This suggested alternative is included in this Draft EIR and discussed further below. An alternative location was not suggested during the NOP public review process.

The City of Irwindale considered alternative locations early in the public scoping process. The City's key considerations in identifying an alternative location were as follows:

- Is there an alternative location where significant effects of the Project would be avoided or substantially lessened?
- Is there a site available within the City's Sphere of Influence with the appropriate size and characteristics such that it would meet the basic Project objectives?

The City has reviewed maps and planning documents in their consideration of alternative locations for the Project. The City has not found an alternative location that exists within the City's Sphere of Influence with the appropriate size and characteristics that would meet the basic Project objectives. An alternative location would also specifically conflict with the objective of "Redevelopment of the Manning Pit." As such, an alternative location is not feasible.

Reduced Land Area Project Alternative

Under this alternative, the portion of Assessor's Parcel Number 8417-034-016 which would require a General Plan Amendment to change the current designation from "Residential" to "Industrial/Business Park" would be removed from the Project site; this would result in reducing the Project site by approximately 26.6 percent. This alternative assumes that the approximately 6.93 acres of land along the western boundary of the Project site, which is currently designated Residential, would be removed from the development and would remain as undeveloped land. The balance of the parcel, the 19.12 acres of land making up the eastern portion of the Project site, which is currently designated Industrial/Business Park, would be developed with a high cube warehouse building. This alternative would not warrant a General Plan amendment for the 6.93 acres of residential land, because it would not be a part of the development. The existing General

Plan designation and zoning designation for the 6.93 acres would remain in conflict and would require reconciliation at some other time.

In addition to the zoning conflict that would result from this Alternative, the City considered this alternative and found that the residual 6.93-acre parcel would be very difficult to develop by itself as either residential or industrial at some future time given its shape and size. The 6.93-acre area is approximately 250 feet (0.05 miles) by 1,240 feet (0.23 miles). Development on an area that is only 250 feet wide results in difficult planning circumstances. For example, roadway, sidewalk, and landscaping improvements would be required to access and move through the 6.93-acre area. These improvements would further reduce the area buildable for residential uses. Setbacks and sound walls may also be warranted, which would further reduce the usable area. The City found that there is a high likelihood that the 6.93 acres may end up being a residual undevelopable parcel, and that this alternative is in conflict with the Project objectives which include strengthening the City's economic base through job creation, development related investment, increased property, sales, and transient occupancy taxes, and to generating local and regional employment opportunities. Further, this alternative would not achieve or would partially not achieve most of the Project objectives, including the quantified development objective, the economic contribution objective, the employment opportunities objective, the marketable high cube warehouse objective, and the redevelopment of the Manning Pit objective. As such, the reduced land area alternative is not a feasible alternative.

5.2 ALTERNATIVES CONSIDERED IN THIS EIR

Three alternatives to the proposed Project were developed based on input from City staff, the public during the NOP review period, and the technical analysis performed to identify the environmental effects of the proposed Project. The alternatives analyzed in this EIR include the following three alternatives in addition to the proposed Project.

- **No Project (No Build) Alternative**: Under this alternative, development of the Project site would not occur, and the Project site would remain in its current existing condition.
- **Multiple Building Alternative:** Under this alternative, the proposed Project would be developed with the same type of use as described in the Project Description, but the warehouse building would be split into three smaller warehouse buildings.
- **Maximum FAR Alternative:** Under this alternative, the proposed Project would be developed using the maximum floor-area-ratio (FAR).

NO PROJECT (NO BUILD) ALTERNATIVE

The CEQA Guidelines (Section 15126.6[e]) require consideration of a no project alternative that represents the existing conditions, as well as what would reasonably be expected to occur in the foreseeable future if the project were not approved. For purposes of this analysis, the No Project (No Build) Alternative assumes that development of the Project would not occur, and the Project site would remain in its current undeveloped condition. It is noted that the No Project (No Build) Alternative would fail to meet the Project objectives identified for the proposed Project and is inconsistent with the goals of the General Plan for the development of the Manning Pit.

MULTIPLE BUILDING ALTERNATIVE

Under this alternative, the Project site would be developed with three separate industrial warehouse buildings: Building 1 (121,397 sf with 111 parking stalls); Building 2 (121,373 sf with 91 parking stalls); and Building 3 (301,713 sf with 194 parking stalls). As shown in Figure 5.0-1, Buildings 1 and 2 would be located along Vincent Avenue (on the eastern half of the site), and Building 3 would be located on the western half of the site. Buildings 1 and 2 would each contain two 5,000 sf office areas, and Building 3 would contain four 5,000 sf office areas. Automobile parking among the three buildings would not be shared and would be dedicated to each building. However, the trailer parking for the trucks would be shared. Overall, the Multiple Building Alternative would include development of up to 544,483 sf of industrial uses (a reduction of 1,252 sf compared to the Project).

The following table summarizes the building area, parking, and lot coverage for each of the three buildings proposed under the Multiple Building Alternative:

TABLE 5.0-1: MULTIPLE BUILDING ALTERNATIVE

	BUILDING AREA (SF)			*LOT COVERAGE (FAR %)*
	OFFICE	*WAREHOUSE*	*TOTAL*	
Building 1	10,000	111,397	121,397	43.88
Building 2	10,000	111,373	121,373	46.42
Building 3	20,000	281,713	301,713	51.30
Overall	*40,000*	*504,483*	*544,483*	*47.2 (average)*

SOURCE: DE NOVO PLANNING GROUP, 2020.

MAXIMUM FAR ALTERNATIVE

Under this alternative, the Project site would have the same footprint as the proposed Project. This alternative assumes that the full 26.05 acres would be developed using the maximum floor-area-ratio (FAR) for the Industrial/Business Park designation (1.0). This alternative would result in a high cube warehouse that would total 1,134,738 square feet of industrial uses. This alternative would warrant a General Plan amendment for the 6.93 acres of residential land, because it would be a part of the development. The existing General Plan designation and zoning designation for the 6.93 acres would be reconciled through the General Plan amendment.

5.3 ENVIRONMENTAL ANALYSIS

The alternatives analysis provides a summary of the relative impact level of significance associated with each alternative for each of the environmental issue areas analyzed in this EIR. Following the analysis of each alternative, Table 5.0-1 summarizes the comparative effects of each alternative.

NO PROJECT (NO BUILD) ALTERNATIVE

Aesthetics and Visual Resources

As described in Section 3.1, the Project site is not designated as a scenic vista by the City of Irwindale General Plan or the Los Angeles County General Plan, nor does it contain any unique or distinguishing features that would qualify the site for designation as a scenic vista. The Project site

is located in an urbanized area. According to the City's General Plan, there are no scenic vistas within the Project area. Compliance with the Commercial and Industrial Design Guidelines and development standards for Irwindale's Zoning District's for height and bulk, and landscaping requirements found in the Zoning code, would reduce visual impacts to the greatest extent feasible. While the proposed Project would permanently convert the vacant land to urbanized uses, the Project site is designated for and consistent with industrial and urban uses established by the General Plan.

Implementation of the lighting plan required by Mitigation Measure 3.1-1 would ensure that lighting features do not result in light spillage onto adjacent properties and do not significantly impact views of the night sky. Adherence to the mitigation measure would ensure that excessively reflective building materials are not used, and that the proposed Project would not result in significant impacts related to daytime glare. As such, impacts related to nighttime lighting and daytime glare would be less than significant with mitigation.

The No Project (No Build) Alternative would leave the Project site in its existing state and would not result in increases in daytime glare or nighttime lighting. The visual character of the Project site would not change under this alternative compared to existing conditions.

Although with mitigation, the proposed Project would not result in significant impacts to aesthetics and visual resources, the No Project (No Build) Alternative would avoid potential aesthetic and visual resources impacts altogether. As such, this impact would be reduced when compared to the proposed Project.

Air Quality

As discussed under Impact 3.2-2 in Section 3.2, the proposed Project would be a direct and indirect source of air pollution, in that it would generate and attract vehicle trips in the region (mobile source emissions) and it would increase area source emissions and energy consumption. The mobile source emissions would be entirely from vehicles, while the area source emissions would be primarily from the use of natural gas fuel combustion, landscape fuel combustion, consumer products, and architectural coatings. The Southern California Air Quality Management District (SCAQMD) provides a list of applicable construction and operation air quality mass emissions thresholds, as well as a list of mitigation measures to incorporate in circumstances where emissions are above applicable thresholds. Table 3.2-5 shows proposed Project maximum daily operation emissions as provided by CalEEMod, which include mobile, area source, and energy emissions of criteria pollutants that would result from operations of the proposed Project under the provided assumptions. As shown in Table 3.2-5, daily emissions of ROG, PM_{10}, $PM_{2.5}$, SOx, and CO resulting from Project buildout would not exceed the SCAQMD thresholds of significance. However, the emissions threshold for NOx would be exceeded, primarily due to the generation of heavy-duty trucks as part of the proposed Project.

In addition to regional significance thresholds, the SCAQMD developed localized significance thresholds (LSTs) for emissions of NO_2, CO, PM_{10}, and $PM_{2.5}$ generated at new development sites (offsite mobile source emissions are not included in the LST analysis protocol). Table 3.2-6 in Section 3.2 shows the LST analysis for the Project operations. As seen in Table 3.2-6, the emissions of these

pollutants on the peak day of operations would not result in significant concentrations of pollutants at nearby sensitive receptors. Therefore, significant impacts would not occur concerning LSTs during operational activities. Although implementation of the proposed Project would not generate significant concentrations of pollutants at nearby sensitive receptors, the proposed Project is expected to exceed the SCAQMD mass threshold for operational NOx, as modelled. Mitigation Measure 3.2-1 would reduce emissions to the maximum extent feasible.

As provided in Tables 3.2-7 and 3.2-9, compliance with federal, State, SCAQMD, and other local regulations and requirements, would ensure the Project would not cause a violation of an air quality standard or contribute substantially to an existing or projected air quality violation, with respect to the construction of the proposed Project. The proposed Project would be required to implement Mitigation Measure 3.2-2, which would ensure that the proposed Project would have a less than significant impact related to the potential to expose sensitive receptors to substantial pollutant concentrations or result in a cumulatively considerable net increase of any criteria pollutant for which the Project region is in nonattainment.

Implementation of the proposed Project would cause an increase in emissions, mainly from the mobile and area categories. Under the No Project (No Build) Alternative, the Project site would not be developed, and there would be no net change in emissions and no potential for a conflict with any adopted plans or policies related to air quality. The Manning Pit would be left in the current condition, and intermittent dust events due to high winds in the area would remain. As such, this impact would be reduced when compared to the proposed Project.

Geology and Soils

The No Project (No Build) Alternative would result in the Project site remaining in its existing condition. The Project site is a former mining pit that contains no existing structures. The No Project (No Build) Alternative would not involve new construction that could be subject to seismic, geologic or soils hazards; thus, this alternative would have no potential for impact. Although the Project would not result in significant geology and soils impacts associated with development of the site, as proposed, impacts associated with geology and soils would be reduced under the No Project (No Build) Alternative when compared to the proposed Project.

Greenhouse Gases, Climate Change and Energy

Short-term construction GHG emissions are a one-time release of GHGs and are not expected to significantly contribute to global climate change over the lifetime of the proposed Project. Construction-related activities that would generate GHG emissions include worker commute trips, haul trucks carrying supplies and materials to and from the Project site, and off-road construction equipment (e.g., dozers, loaders, excavators). Table 3.4-1 in Section 3.4 illustrates the specific construction-generated GHG emissions that would result from construction of the Project. As shown, Project construction would result in the generation of approximately 2,831.5 metric tons of CO_2e over the course of construction. Once construction is complete, the generation of these GHG emissions would cease. The amortized construction emissions are added to the annual average operational emissions. Additionally, operation of the Project would result in GHG emissions predominantly associated with motor vehicle use. Long-term operational GHG emissions

attributable to the Project are identified in Table 3.4-2 and compared to SCAQMD's interim screening level numeric bright-line threshold of 10,000 metric tons of CO_2e annually. Operational-generated emissions would not exceed the SCAQMD's numeric bright-line threshold of 10,000 metric tons of CO_2e annually. Nevertheless, out of an abundance of caution, the proposed Project would be required to implement Mitigation Measure 3.4-1, which include CARB and SCAQMD-recommended measures to reduce GHG emissions through the implementation of solar and energy-conserving systems, landscaping, and use of light colored paving and roofing materials.

Under the No Project (No Build) Alternative, the Project site would not be developed, and there would be no net change in emissions and no potential for a conflict with any adopted plans or policies related to GHG reductions. As such, this impact would be reduced when compared to the proposed Project.

Hazards and Hazardous Materials

Depending on the ultimate end user for the proposed Project, there is a risk of release of hazardous materials into the environment if they are not stored and handled in accordance with best management practices. There is a wide variety of hazardous materials that could be used as part of industrial and commercial operations within the proposed warehouse building. Any business operation requesting the use, sale or storage of hazardous materials would also be subject to Conditional Use Permit per IMC Subsection 17.80.030(27). There will be a risk of release of these materials into the environment if they are not stored and handled in accordance with best management practices approved by the Los Angeles County Fire Department Health Hazardous Materials Division.

Under the No Project (No Build) Alternative, no new land uses would be introduced to the Project site, and the potential for hazardous material release on the Project site would be eliminated. Although the Project would not result in significant hazards and hazardous materials impacts associated with development of the site, as proposed, impacts associated with hazards and hazardous materials would be reduced under the No Project (No Build) Alternative when compared to the proposed Project.

Hydrology and Water Quality

As described in Section 3.6, implementation of the proposed Project has the potential to result in the violation of water quality standards and the discharge of pollutants into surface waters during both construction and long-term operations. Construction operations could result in temporary increases in runoff, erosion, sedimentation, soil compaction and wind erosion effects that could adversely affect soils and reduce the revegetation potential at the construction site and staging areas. The long-term operation of the proposed Project could result in long-term impacts to surface water quality from urban stormwater runoff that could enter groundwater or surface water systems. The mitigation measure provided in Section 3.6 would reduce potential water quality impacts to a less than significant level. The proposed Project would not significantly impact groundwater recharge or place persons or structures in a flood hazard zone. The proposed Project would also not cause the substantial depletion of groundwater supplies or interfere substantially with groundwater recharge such that the Project may impede sustainable groundwater management of the basin.

Under the No Project (No Build) Alternative, potential water quality impacts from construction and operation of the proposed Project would not occur. Under this alternative, the Project site would remain in its current condition as an undeveloped, recently filled, former aggregate mine pit. Because the Project site would remain open to the elements under the No Project (No Build) Alternative, the erosion potential would be greater than the proposed Project. This alternative would not submit a Storm Water Pollution Prevention Plan designed to control pollutant discharges utilizing Best Management Practices and technology to reduce erosion and sediments. This alternative also would not alter the drainage pattern of the site. While groundwater recharge is not considered a significant impact under the proposed Project, the No Project (No Build) Alternative will have a greater chance of groundwater recharge because it does not introduce large areas of impervious surfaces as would the proposed Project. Although with the implementation of mitigation, the Project would not result in significant hydrology and water quality impacts, potential impacts related to hydrology and water quality would be reduced under the No Project (No Build) Alternative when compared to the proposed Project.

Noise

The proposed Project could increase noise-generating activities associated with the maintenance and operation of the proposed Project, as well as from vehicular traffic. Short-term construction noise would also result. Mitigation Measure 3.7-1 provided in Section 3.7 would reduce the potential impact associated with Project construction noise to a less than significant level.

Under the No Project (No Build) Alternative, the Project site would not be developed and there would be no potential for new noise sources. Although with the implementation of mitigation, the Project would not result in significant noise impacts, potential noise impacts would be reduced under the No Project (No Build) Alternative when compared to the proposed Project.

Transportation and Circulation

The No Project (No Build) Alternative would not introduce additional vehicle trips and miles traveled on the area roadways. It was determined that the proposed Project would result in 23.4 work vehicle-miles-traveled (VMT) per employee. The existing baseline for the City of Irwindale is 24.0 work VMT per employee; as such, the proposed Project is forecast to result in better than existing baseline VMT. Additionally, impacts associated with bicycle facilities, pedestrian facilities, transit facilities, emergency access, and hazards due to design features were determined to be less than significant.

Under the No Project (No Build) Alternative, the Project site would not be developed and there would be no increased traffic activities, including both automobile and non-automobile activities associated with the site. Although the Project would not result in significant transportation impacts, and would result in VMT below the City's baseline, transportation impacts would be reduced under the No Project (No Build) Alternative when compared to the proposed Project.

MULTIPLE BUILDING ALTERNATIVE

Aesthetics and Visual Resources

As described in Section 3.1, the Project site is not designated as a scenic vista by the City of Irwindale General Plan or the Los Angeles County General Plan, nor does it contain any unique or distinguishing features that would qualify the site for designation as a scenic vista. The Project site is located in an urbanized area. According to the City's General Plan, there are no scenic vistas within the Project area. Compliance with the Commercial and Industrial Design Guidelines and development standards for Irwindale's Zoning District's for height and bulk, and landscaping requirements found in the Zoning code, would reduce visual impacts to the greatest extent feasible. While the proposed Project would permanently convert the vacant land to urbanized uses, the Project site is designated for and consistent with industrial and urban uses established by the General Plan.

Implementation of the lighting plan required by Mitigation Measure 3.1-1 would ensure that lighting features do not result in light spillage onto adjacent properties and do not significantly impact views of the night sky. Adherence to the mitigation measure would ensure that excessively reflective building materials are not used, and that the proposed Project would not result in significant impacts related to daytime glare. As such, impacts related to nighttime lighting and daytime glare would be less than significant with mitigation.

Under this alternative, the Project site would be developed with three separate industrial warehouse buildings: Building 1 (121,397 sf with 111 parking stalls); Building 2 (121,373 sf with 91 parking stalls); and Building 3 (301,713 sf with 194 parking stalls). As shown in Figure 5.0-1, Buildings 1 and 2 would be located along Vincent Avenue (on the eastern half of the site), and Building 3 would be located on the western half of the site. In order to accommodate multiple buildings on the Project site, the building setbacks would be significantly reduced compared to the proposed Project.

Visual simulations for the Multiple Building Alternative were completed by the Project applicant and are shown in Figure 5.0-2a, 5.0-2b, and 5.0-2c. As shown, the buildings would be substantially similar in style, height, and type. However, the reduced building setbacks would result in narrower landscape strips along the perimeter of the site. Additionally, under the proposed Project, parked trucks and trailers would be visible from Vincent Avenue. Under the Multiple Building Alternative, the trailers and trucks would be parked internal to the site, and would not be visible from Vincent Avenue. The narrow landscape strips would not screen the buildings to the same extent as the proposed Project landscaping. The visual change from Vincent Avenue would be more pronounced compared to the Project. As shown in Figure 5.0-2a, views of the San Gabriel Mountains from Vincent Avenue under the Multiple Building Alternative would be obscured by the two warehouse buildings on the eastern portion of the site. As compared to Figure 3.1-1a in Section 3.1, views of the mountains would be more obscured under the Multiple Building Alternative than the proposed Project. Both the Multiple Building Alternative and the proposed Project would result in less than significant impacts related to scenic vistas and conflicts with applicable zoning or other regulation governing scenic quality within an urbanized area.

Implementation of the lighting plan required by Mitigation Measure 3.1-1 would ensure that lighting features do not result in light spillage onto adjacent properties and do not significantly impact views of the night sky. Adherence to the mitigation measure would ensure that excessively reflective building materials are not used, and that the proposed Project and Multiple Building Alternative would not result in significant impacts related to daytime glare. As such, impacts related to nighttime lighting and daytime glare would be less than significant with mitigation under this alternative.

However, due to the decreased building setbacks and narrow landscape strips which would screen the buildings to a lesser extent than the Project, the Multiple Building Alternative would have a slightly increased impact on visual resources when compared to the proposed Project.

Air Quality

Under buildout conditions in Los Angeles County, the SCAB would continue to experience increases in criteria pollutants and efforts to improve air quality throughout the basin would be hindered. As described in Section 3.2, the SCAB is designated as a nonattainment area for the federal ozone and $PM_{2.5}$ standards and is also a nonattainment area for the state standards for ozone, PM_{10}, and $PM_{2.5}$. Table 3.2-2 in Section 3.2 presents the state and federal attainment status for each criteria pollutant.

As discussed under Impact 3.2-2 in Section 3.2, the proposed Project would be a direct and indirect source of air pollution, in that it would generate and attract vehicle trips in the region (mobile source emissions) and it would increase area source emissions and energy consumption. The mobile source emissions would be entirely from vehicles, while the area source emissions would be primarily from the use of natural gas fuel combustion, landscape fuel combustion, consumer products, and architectural coatings. The SCAQMD provides a list of applicable construction and operation air quality mass emissions thresholds, as well as a list of mitigation measures to incorporate in circumstances where emissions are above applicable thresholds. Table 3.2-5 shows proposed Project maximum daily operation emissions as provided by CalEEMod, which include mobile, area source, and energy emissions of criteria pollutants that would result from operations of the proposed Project under the provided assumptions. As shown in Table 3.2-5, daily emissions of ROG, PM_{10}, $PM_{2.5}$, SOx, and CO resulting from Project buildout would not exceed the SCAQMD thresholds of significance. However, the emissions threshold for NOx would be exceeded, primarily due to the generation of heavy-duty trucks as part of the proposed Project.

In addition to regional significance thresholds, the SCAQMD developed LSTs for emissions of NO_2, CO, PM_{10}, and $PM_{2.5}$ generated at new development sites (offsite mobile source emissions are not included in the LST analysis protocol). Table 3.2-6 in Section 3.2 shows the LST analysis for the Project operations. As seen in Table 3.2-6, the emissions of these pollutants on the peak day of operations would not result in significant concentrations of pollutants at nearby sensitive receptors. Therefore, significant impacts would not occur concerning LSTs during operational activities. Although implementation of the proposed Project would not generate significant concentrations of pollutants at nearby sensitive receptors, the proposed Project is expected to exceed the SCAQMD mass threshold for operational NOx, as modelled. Mitigation Measure 3.2-1 would reduce emissions to the maximum extent feasible.

As provided in Tables 3.2-7 and 3.2-9, compliance with federal, State, SCAQMD, and other local regulations and requirements, would ensure the Project would not cause a violation of an air quality standard or contribute substantially to an existing or projected air quality violation, with respect to the construction of the proposed Project. The proposed Project would be required to implement Mitigation Measure 3.2-2, which would ensure that the proposed Project would have a less than significant impact related to the potential to expose sensitive receptors to substantial pollutant concentrations or result in a cumulatively considerable net increase of any criteria pollutant for which the Project region is in nonattainment.

Implementation of the proposed Project would cause an increase in emissions, mainly from the mobile and area categories. The proposed Project mobile source emissions would be entirely from vehicles, while the area source emissions would be primarily from the use of natural gas fuel combustion, landscape fuel combustion, consumer products, and architectural coatings. Under the Multiple Building Alternative, the proposed Project would be developed with the same industrial warehouse use as described in the Project Description. However, instead of one large warehouse building, this alternative would provide three separate industrial warehouse buildings. The slight reduction in industrial square footage would result in a slight reduction in VMT. Mobile source air emissions are directly correlated to traffic volume; therefore, it is estimated that the slight reduction in trip volume would result in a slight reduction in the amount of the mobile source emissions. The area source emissions would be similar to the Project. Additionally, under this alternative, the truck parking areas would be internal to the site; as such, the mobile emissions associated with truck movement and idling would be further away from nearby residential receptors.

Uses in the Multiple Building Alternative would be required to adhere to the same mitigation measures as the proposed Project. Because the Multiple Building Alternative would locate truck parking areas internal to the site and would slightly reduce VMT compared to the Project, this alternative would result in slightly reduced impacts related to air quality when compared to the proposed Project. Significant and unavoidable impacts would still occur under this alternative.

Geology and Soils

As described in Section 3.6, the Project site does not have a significant risk of becoming unstable as a result landslide, subsidence, or soil collapse. However, there is a potential for liquefaction, liquefaction induced settlement, and lateral spreading, of the underlaying soils. Additionally, although engineered artificial fills occur within the Project Site, seismic hazard zoning for expansive soils of the Project site is governed by the expansive susceptibility of natural soils underlying the fill sites. According to the NRCS Web Soil Survey, the soils in the Project site have a low shrink-swell potential. The NRCS Web Soil Survey indicates that near surface soils within the Project site have low plasticity, and the expansion potential of the soils would respond to fluctuations in moisture content. However, Mitigation Measure 3.3-1 provided in Section 3.3 would ensure this impact will be less than significant.

Under the Multiple Building Alternative, the amount of developed area would be similar to the Project and the large warehouse building proposed by the Project would be split into three smaller buildings. Geologic and soils impacts tend to be site-specific and Project-specific. As such, the

Multiple Building Alternative would be subject to the same hazardous geological conditions. The proposed Project is not anticipated to result in significant impacts from geology and soils with mitigation. The Multiple Building Alternative would be subject to the same mitigation and would result in similar potential for geology and soils impacts when compared to the proposed Project.

Greenhouse Gases, Climate Change and Energy

As stated previously, construction GHG emissions are a one-time release of GHGs and are not expected to significantly contribute to global climate change over the lifetime of the proposed Project. Construction-related activities that would generate GHG emissions include worker commute trips, haul trucks carrying supplies and materials to and from the Project site, and off-road construction equipment (e.g., dozers, loaders, excavators). Table 3.4-1 in Section 3.4 illustrates the specific construction-generated GHG emissions that would result from construction of the Project. As shown, Project construction would result in the generation of approximately 2,831.5 metric tons of CO_2e over the course of construction. Once construction is complete, the generation of these GHG emissions would cease. The amortized construction emissions are added to the annual average operational emissions. Additionally, operation of the Project would result in GHG emissions predominantly associated with motor vehicle use. Long-term operational GHG emissions attributable to the Project are identified in Table 3.4-2 and compared to SCAQMD's interim screening level numeric bright-line threshold of 10,000 metric tons of CO_2e annually. Operational-generated emissions would not exceed the SCAQMD's numeric bright-line threshold of 10,000 metric tons of CO_2e annually. Nevertheless, out of an abundance of caution, the proposed Project would be required to implement Mitigation Measure 3.4-1, which include CARB and SCAQMD-recommended measures to reduce GHG emissions through the implementation of solar and energy-conserving systems, landscaping, and use of light colored paving and roofing materials. All impacts associated with GHGs and energy would be less than significant or less than significant with mitigation.

Under the Multiple Building Alternative, the proposed Project would be developed with the same industrial warehouse use as described in the Project Description. However, instead of one large warehouse building, this alternative would provide three separate industrial warehouse buildings. The slight reduction in industrial square footage would result in a slight reduction in VMT. Mobile GHG emissions are directly correlated to traffic volume; therefore, it is estimated that the slight reduction in trip volume would result in a slight reduction in the amount of the mobile source GHG emissions. All uses in the Multiple Building Alternative would be required to adhere to the same mitigation measure as the proposed Project. Nevertheless, because the Multiple Building Alternative would slightly reduce VMT compared to the Project, this alternative would result in slightly reduced impacts related to GHGs, climate change, and energy when compared to the proposed Project.

Hazards and Hazardous Materials

Depending on the ultimate end user, there is a risk of release of hazardous materials into the environment if they are not stored and handled in accordance with best management practices. There is a wide variety of hazardous materials that could be used as part of industrial and

commercial operations within the proposed warehouse building. Any business operation requesting the use, sale or storage of hazardous materials would also be subject to Conditional Use Permit per IMC Subsection 17.80.030(27). There will be a risk of release of these materials into the environment if they are not stored and handled in accordance with best management practices approved by the Los Angeles County Fire Department Health Hazardous Materials Division.

Under the Multiple Building Alternative, the allowable uses on the site would not change when compared to the proposed Project. This alternative would likely use similar hazardous materials as those identified under the proposed Project. As such, this alternative would have the potential for similar impacts from hazards and hazardous materials when compared to the proposed Project.

Hydrology and Water Quality

As described in Section 3.6, implementation of the proposed Project has the potential to result in the violation of water quality standards and the discharge of pollutants into surface waters during both construction and long-term operations. Construction operations could result in temporary increases in runoff, erosion, sedimentation, soil compaction, and wind erosion effects that could adversely affect soils and reduce the revegetation potential at construction sites and staging areas. The long-term operation of the proposed Project could result in long-term impacts to surface water quality from urban stormwater runoff and could enter groundwater or surface water systems. The mitigation measure provided in Section 3.6 would reduce potential water quality impacts to a less than significant level. The proposed Project would not significantly impact groundwater recharge or place persons or structures in a flood hazard zone. The proposed Project would also not cause the substantial depletion of groundwater supplies or interfere substantially with groundwater recharge such that the Project may impede sustainable groundwater management of the basin.

Under the Multiple Building Alternative, potential construction-related and long-term operational impacts to water quality or waste discharge related to stormwater runoff would be equivalent to the proposed Project. The amount of impervious surfaces would also be comparable to the proposed Project. As with the proposed Project, this alternative will include stormwater detention/basins, and provide natural BMPs to reduce pollutants in stormwater runoff. As such, potential impacts related to hydrology and water quality would be similar under the Multiple Building Alternative when compared to the proposed Project.

Noise

The proposed Project could increase noise-generating activities associated with the maintenance and operation of the proposed Project, as well as from vehicular traffic. Short-term construction noise would also result. Mitigation Measure 3.7-1 provided in Section 3.7 would reduce the potential impact associated with construction noise to a less than significant level.

The Multiple Building Alternative would result in a similar use as the Project with a similar total square footage as the proposed Project. The potential noise impacts associated with the Multiple Building Alternative were evaluated. Figure 5.0-3 shows the results of this analysis for the Multiple Building Alternative site layout in terms of the peak hour average (L_{eq}). Assuming continuous (24-

hour) operation of the Multiple Building Alternative at operational levels equal to the peak hour, the day/night average (L_{dn}) noise levels are shown on Figure 5.0-4.

Based upon Figure 5.0-3, the Multiple Building Alternative would generate peak hour noise levels of 65 dBA L_{eq}, or less, at the boundaries of the Project site. This would comply with the City of Irwindale limit of 65 dBA L_{eq} for industrial property noise during nighttime hours (10:00 p.m. to 7:00 a.m.).

Based upon Figure 5.0-4, the Multiple Building Alternative is predicted to generate noise levels of approximately 53.5 dBA L_{dn} at the residential uses to the west of the Project site (compared to 58.1 dBA L_{dn} under the proposed Project). Existing ambient noise measurements in the vicinity of these receptors was found to be approximately 60.0 dBA L_{dn}, as shown by Table 3.7-2 of Section 3.7. At this location, the increase in noise levels due to the Multiple Building Alternative is estimated to be 0.9 dBA (compared to 2.2 dBA under the proposed Project). This would be less than the Federal Interagency Committee on Noise (FICON) increase criteria of 3 dBA where existing noise levels are between 60 and 65 dBA. Both the proposed Project and the Multiple Building Alternative would result in less than significant traffic noise impacts for the residents to the west.

Based upon Figure 5.0-4, the Multiple Building Alternative is predicted to generate noise levels of approximately 52.9 dBA L_{dn} at the residential uses to the east of the Project site (compared to 64.4 dBA L_{dn} under the proposed Project). Existing ambient noise measurements in the vicinity of these receptors was found to be approximately 73.5 dBA L_{dn}, as shown by Table 3.7-2 of Section 3.7. At this location, the increase in noise levels due to the Multiple Building Alternative is estimated to be 0.0 dBA (compared to 0.5 BA under the proposed Project). This would be less than the FICON increase criteria of 1.5 dBA where existing noise levels exceed 65 dBA. Both the proposed Project and the Multiple Building Alternative would result in less than significant traffic noise impacts for the residents to the east.

Both the proposed Project and the Multiple Building Alternative would not cause construction noise levels to exceed 75 dBA L_{eq}. at the project boundaries. The reduction of 1,252 sf of industrial uses under this alternative compared to the Project was determined to not affect the overall noise environment. Overall, because the resulting noise levels at the nearest residential receptors would be less with the Multiple Building Alternative than the proposed Project, this alternative would have reduced noise impacts when compared to the proposed Project.

Transportation and Circulation

Similar to the Project, the Multiple Building Alternative would introduce additional vehicle trips and miles traveled on the area roadways. It was determined that the proposed Project would result in 23.4 work VMT per employee. The existing baseline for the City of Irwindale is 24.0 work VMT per employee; as such, the proposed Project is forecast to result in better than existing baseline VMT. Additionally, impacts associated with bicycle facilities, pedestrian facilities, transit facilities, emergency access, and hazards due to design features were determined to be less than significant.

Under this alternative, the Project site would be developed with three separate industrial warehouse buildings: Building 1 (121,397 sf with 111 parking stalls); Building 2 (121,373 sf with 91 parking stalls); and Building 3 (301,713 sf with 194 parking stalls). The Project proposes development

of a 545,735-sf concrete tilt-up industrial warehouse building, while the Multiple Building Alternative would include development of up to 544,483 sf of industrial uses (a reduction of 1,252 sf). The slight reduction in industrial square footage would result in a slight reduction in VMT. Nevertheless, under both the Multiple Building Alternative and the proposed Project, impacts associated with CEQA Guideline section 15064.3 would be less than significant.

Both the proposed Project and the Multiple Building Alternative would include construction of bicycle and pedestrian facilities. Vincent Avenue along the Project site's frontage would be improved to its ultimate half-section width, including landscaping and parkway improvements, as required by the City of Irwindale. The improvements would provide continuous sidewalks adjacent to the site that would connect to existing sidewalks within the area. Bicycle parking would also be provided under the proposed Project and the Multiple Building Alternative. The number of transit riders under this alternative would be relatively minor and spread over a number of work shifts typical of warehousing employment.

The site plan under both the Project and this alternative would be reviewed by the City of Irwindale and the Los Angeles County Fire Department to ensure the on-site circulation provides adequate access and turning radii for emergency vehicles. Sight distance at access driveways would comply with applicable City of Irwindale/Caltrans sight distance standards. The final grading, landscaping, and street improvement plans would demonstrate that sight distance standards are met and would be subject to City approval. Further, on-site traffic signing and striping would be implemented in conjunction with detailed construction plans for the Project. On-site traffic control plans would comply with the California Manual of Uniform Traffic Control Devices (2014), as required and confirmed through the City's site plan review process.

Overall, because the resulting VMT would be slightly less than the proposed Project, this alternative would have slightly reduced impacts related to transportation and circulation compared to the proposed Project.

MAXIMUM FAR ALTERNATIVE

Aesthetics and Visual Resources

As described in Section 3.1, the Project site is not designated as a scenic vista by the City of Irwindale General Plan or the Los Angeles County General Plan, nor does it contain any unique or distinguishing features that would qualify the site for designation as a scenic vista. The Project site is located in an urbanized area. According to the City's General Plan, there are no scenic vistas within the Project area. Compliance with the Commercial and Industrial Design Guidelines and development standards for Irwindale's Zoning District's for height and bulk, and landscaping requirements found in the Zoning code, would reduce visual impacts to the greatest extent feasible. While the proposed Project would permanently convert the vacant land to urbanized uses, the Project site is designated for and consistent with industrial and urban uses established by the General Plan.

Implementation of the lighting plan required by Mitigation Measure 3.1-1 would ensure that lighting features do not result in light spillage onto adjacent properties and do not significantly impact views

of the night sky. Adherence to the mitigation measure would ensure that excessively reflective building materials are not used, and that the proposed Project would not result in significant impacts related to daytime glare. As such, impacts related to nighttime lighting and daytime glare would be less than significant with mitigation.

Under this alternative, the Project site would have the same footprint as the proposed Project. This alternative assumes that the full 26.05 acres would be developed using this maximum FAR for the Industrial/Business Park designation (1.0). This alternative would result in a high cube warehouse that would total 1,134,738 square feet of industrial uses, which is over twice the size of the warehouse building proposed by the Project. In order to accommodate over double the amount of industrial uses on the Project site, the building setbacks would be significantly reduced compared to the proposed Project, and increased building heights may be required. This would result in increased impacts associated with the scenic character of the site.

Due to the doubling of building square footage under this alternative, increased lighting may be warranted. Implementation of the lighting plan required by Mitigation Measure 3.1-1 would ensure that lighting features do not result in light spillage onto adjacent properties and do not significantly impact views of the night sky. Adherence to the mitigation measure would ensure that excessively reflective building materials are not used, and that the proposed Project and Maximum FAR Alternative would not result in significant impacts related to daytime glare. As such, impacts related to nighttime lighting and daytime glare would be less than significant with mitigation under this alternative.

Overall, because the Maximum FAR Alternative would significantly increase the size of the proposed warehouse building, impacts associated with aesthetics would be greater when compared to the proposed Project.

Air Quality

Under buildout conditions in Los Angeles County, the SCAB would continue to experience increases in criteria pollutants and efforts to improve air quality throughout the basin would be hindered. As described in Section 3.2, the SCAB is designated as a nonattainment area for the federal ozone and $PM_{2.5}$ standards and is also a nonattainment area for the state standards for ozone, PM_{10}, and $PM_{2.5}$. Table 3.2-2 in Section 3.2 presents the state and federal attainment status for each criteria pollutant.

As discussed under Impact 3.2-2 in Section 3.2, the proposed Project would be a direct and indirect source of air pollution, in that it would generate and attract vehicle trips in the region (mobile source emissions) and it would increase area source emissions and energy consumption. The mobile source emissions would be entirely from vehicles, while the area source emissions would be primarily from the use of natural gas fuel combustion, landscape fuel combustion, consumer products, and architectural coatings. The SCAQMD provides a list of applicable construction and operation air quality mass emissions thresholds, as well as a list of mitigation measures to incorporate in circumstances where emissions are above applicable thresholds. Table 3.2-5 shows proposed Project maximum daily operation emissions as provided by CalEEMod, which include mobile, area source, and energy emissions of criteria pollutants that would result from operations of the

proposed Project under the provided assumptions. As shown in Table 3.2-5, daily emissions of ROG, PM_{10}, $PM_{2.5}$, SOx, and CO resulting from Project buildout would not exceed the SCAQMD thresholds of significance. However, the emissions threshold for NOx would be exceeded, primarily due to the generation of heavy-duty trucks as part of the proposed Project.

In addition to regional significance thresholds, the SCAQMD developed LSTs for emissions of NO_2, CO, PM_{10}, and $PM_{2.5}$ generated at new development sites (offsite mobile source emissions are not included in the LST analysis protocol). Table 3.2-6 in Section 3.2 shows the LST analysis for the Project operations. As seen in Table 3.2-6, the emissions of these pollutants on the peak day of operations would not result in significant concentrations of pollutants at nearby sensitive receptors. Therefore, significant impacts would not occur concerning LSTs during operational activities. Although implementation of the proposed Project would not generate significant concentrations of pollutants at nearby sensitive receptors, the proposed Project is expected to exceed the SCAQMD mass threshold for operational NOx, as modelled. Mitigation Measure 3.2-1 would reduce emissions to the maximum extent feasible.

As provided in Tables 3.2-7 and 3.2-9, compliance with federal, State, SCAQMD, and other local regulations and requirements, would ensure the Project would not cause a violation of an air quality standard or contribute substantially to an existing or projected air quality violation, with respect to the construction of the proposed Project. The proposed Project would be required to implement Mitigation Measure 3.2-2, which would ensure that the proposed Project would have a less than significant impact related to the potential to expose sensitive receptors to substantial pollutant concentrations or result in a cumulatively considerable net increase of any criteria pollutant for which the Project region is in nonattainment.

Implementation of the proposed Project would cause an increase in emissions, mainly from the mobile and area categories. The proposed Project mobile source emissions would be entirely from vehicles, while the area source emissions would be primarily from the use of natural gas fuel combustion, landscape fuel combustion, consumer products, and architectural coatings. Under the Maximum FAR Alternative, the amount of developed area would be similar to the Project. Although the building square footage would increase, a comparable amount of land would be converted to urban uses under this alternative. The near doubling of building size would result in an increase in VMT. Mobile source air emissions are directly correlated to traffic volume; therefore, it is estimated that the increase in trip volume would result in an increase in the amount of the mobile source emissions. The area source emissions would be similar to the Project. Additionally, under this alternative, the truck parking areas would be located along the site perimeter, similar to the Project; as such, the mobile emissions associated with truck movement and idling would be similar distances away from nearby residential receptors as the Project.

Uses in the Maximum FAR Alternative would be required to adhere to the same mitigation measures as the proposed Project. Because the Maximum FAR Alternative would increase VMT compared to the Project, this alternative would result in increased impacts related to air quality when compared to the proposed Project. Significant and unavoidable impacts would still occur under this alternative.

Geology and Soils

As described in Section 3.6, the Project site does not have a significant risk of becoming unstable as a result landslide, subsidence, or soil collapse. However, there is a potential for liquefaction, liquefaction induced settlement, and lateral spreading, of the underlaying soils. Additionally, although engineered artificial fills occur within the Project Site, seismic hazard zoning for expansive soils of the Project site is governed by the expansive susceptibility of natural soils underlying the fill sites. According to the NRCS Web Soil Survey, the soils in the Project site have a low shrink-swell potential. The NRCS Web Soil Survey indicates that near surface soils within the Project site have low plasticity, and the expansion potential of the soils would respond to fluctuations in moisture content. However, Mitigation Measure 3.3-1 provided in Section 3.3 would ensure this impact will be less than significant.

Under the Maximum FAR Alternative, the amount of developed area would be similar to the Project and the larger warehouse building proposed by the Project. Although the building square footage would increase, a comparable amount of land would be converted to urban uses under this alternative. Geologic and soils impacts tend to be site-specific and Project-specific. As such, the Maximum FAR Alternative would be subject to the same hazardous geological conditions. The proposed Project is not anticipated to result in significant impacts from geology and soils with mitigation. The Maximum FAR Alternative would be subject to the same mitigation and would result in similar potential for geology and soils impacts when compared to the proposed Project.

Greenhouse Gases, Climate Change and Energy

Short-term construction GHG emissions are a one-time release of GHGs and are not expected to significantly contribute to global climate change over the lifetime of the proposed Project. Construction-related activities that would generate GHG emissions include worker commute trips, haul trucks carrying supplies and materials to and from the Project site, and off-road construction equipment (e.g., dozers, loaders, excavators). Table 3.4-1 in Section 3.4 illustrates the specific construction-generated GHG emissions that would result from construction of the Project. As shown, Project construction would result in the generation of approximately 2,831.5 metric tons of CO_2e over the course of construction. Once construction is complete, the generation of these GHG emissions would cease. The amortized construction emissions are added to the annual average operational emissions. Additionally, operation of the Project would result in GHG emissions predominantly associated with motor vehicle use. Long-term operational GHG emissions attributable to the Project are identified in Table 3.4-2 and compared to SCAQMD's interim screening level numeric bright-line threshold of 10,000 metric tons of CO_2e annually. Operational-generated emissions would not exceed the SCAQMD's numeric bright-line threshold of 10,000 metric tons of CO_2e annually. Nevertheless, out of an abundance of caution, the proposed Project would be required to implement Mitigation Measure 3.4-1, which include CARB and SCAQMD-recommended measures to reduce GHG emissions through the implementation of solar and energy-conserving systems, landscaping, and use of light colored paving and roofing materials.

Under the Maximum FAR Alternative, the proposed Project would be developed with the same industrial warehouse use as described in the Project Description. However, the building square

footage would be doubled under this alternative. The increase in industrial square footage would result in an increase in VMT and area source emissions. Mobile GHG emissions are directly correlated to traffic volume; therefore, it is estimated that the increase in trip volume would result in an increase in the amount of the mobile source GHG emissions. All uses in the Maximum FAR Alternative would be required to adhere to the same mitigation measure as the proposed Project. Nevertheless, because the Maximum FAR Alternative would increase VMT compared to the Project and would double the industrial building size, this alternative would result in increased impacts related to GHGs, climate change, and energy when compared to the proposed Project.

Hazards and Hazardous Materials

Depending on the ultimate end user, there is a risk of release of hazardous materials into the environment if they are not stored and handled in accordance with best management practices. There is a wide variety of hazardous materials that could be used as part of industrial and commercial operations within the proposed warehouse building. Any business operation requesting the use, sale or storage of hazardous materials would also be subject to Conditional Use Permit per IMC Subsection 17.80.030(27). There will be a risk of release of these materials into the environment if they are not stored and handled in accordance with best management practices approved by the Los Angeles County Fire Department Health Hazardous Materials Division.

Under the Maximum FAR Alternative, the allowable uses on the site would not change when compared to the proposed Project. This alternative would likely use similar hazardous materials as those identified under the proposed Project. As such, this alternative would have the potential for similar impacts from hazards and hazardous materials when compared to the proposed Project.

Hydrology and Water Quality

As described in Section 3.6, implementation of the proposed Project has the potential to result in the violation of water quality standards and the discharge of pollutants into surface waters during both construction and long-term operations. Construction operations could result in temporary increases in runoff, erosion, sedimentation, soil compaction and wind erosion effects that could adversely affect soils and reduce the revegetation potential at construction sites and staging areas. The long-term operation of the proposed Project could result in long-term impacts to surface water quality from urban stormwater runoff and could enter groundwater or surface water systems. The mitigation measure provided in Section 3.6 would reduce potential water quality impacts to a less than significant level. The proposed Project would not significantly impact groundwater recharge or place persons or structures in a flood hazard zone. The proposed Project would also not cause the substantial depletion of groundwater supplies or interfere substantially with groundwater recharge such that the Project may impede sustainable groundwater management of the basin.

Under the Maximum FAR Alternative, potential construction-related and long-term operational impacts to water quality or waste discharge related to stormwater runoff would be similar to the proposed Project. Despite the increased building size under this alternative, the amount of impervious surfaces would also be comparable to the proposed Project. As with the proposed Project, this alternative will include stormwater detention/basins, and provide natural BMPs to reduce pollutants in stormwater runoff and the mitigation measure identified for the Project would

be applicable to this Alternative. As such, potential impacts related to hydrology and water quality would be similar under the Maximum FAR Alternative when compared to the proposed Project.

Noise

The proposed Project could increase noise-generating activities associated with the maintenance and operation of the proposed Project, as well as from vehicular traffic. Short-term construction noise would also result. Mitigation Measure 3.7-1 provided in Section 3.7 would reduce the potential impact associated with construction noise to a less than significant level.

The Maximum FAR Alternative would result in a similar use as the Project, but with over twice as much building square footage as the Project. The doubling of building size would result in a subsequent increase in traffic and operational noise when compared to the Project.

Because the Maximum FAR Alternative would result in more development, the noise impacts associated with future uses would be increased when compared to the proposed Project. Under this alternative, noise impacts would be increased proportionate to the increased development size when compared to the proposed Project.

Transportation and Circulation

Similar to the Project, the Maximum FAR Alternative would introduce additional vehicle trips and miles traveled on the area roadways. It was determined that the proposed Project would result in 23.4 work VMT per employee. The existing baseline for the City of Irwindale is 24.0 work VMT per employee; as such, the proposed Project is forecast to result in better than existing baseline VMT. Additionally, impacts associated with bicycle facilities, pedestrian facilities, transit facilities, emergency access, and hazards due to design features were determined to be less than significant.

Under this alternative, the Project site would be developed with 1,134,738 square feet of industrial uses within one warehouse building. The near doubling of building size would result in an increase in VMT. The increase in VMT would result in a worse than existing baseline VMT. Under the Maximum FAR Alternative, impacts associated with CEQA Guideline section 15064.3 would be significant and unavoidable.

Both the proposed Project and the Maximum FAR Alternative would include construction of bicycle and pedestrian facilities. Vincent Avenue along the Project site's frontage would be improved to its ultimate half-section width, including landscaping and parkway improvements, as required by the City of Irwindale. The improvements would provide continuous sidewalks adjacent to the site that would connect to existing sidewalks within the area. Bicycle parking would also be provided under the proposed Project and the Maximum FAR Alternative. The number of transit riders under this alternative would be relatively minor and spread over a number of work shifts typical of warehousing employment. It is noted, however, that because this alternative would increase the number of employees on the site as a result of the increased building square footage, more employees would likely use transit than under the proposed Project.

The site plan under both the Project and this alternative would be reviewed by the City of Irwindale and the Los Angeles County Fire Department to ensure the on-site circulation provides adequate

access and turning radii for emergency vehicles. Sight distance at access driveways would comply with applicable City of Irwindale/Caltrans sight distance standards. The final grading, landscaping, and street improvement plans would demonstrate that sight distance standards are met and would be subject to City approval. Further, on-site traffic signing and striping would be implemented in conjunction with detailed construction plans for the Project. On-site traffic control plans would comply with the California Manual of Uniform Traffic Control Devices (2014), as required and confirmed through the City's site plan review process.

Overall, because the resulting VMT would be significantly greater than the proposed Project, this alternative would have increased impacts related to transportation when compared to the proposed Project.

ENVIRONMENTALLY SUPERIOR ALTERNATIVE

CEQA requires that an environmentally superior alternative be identified among the alternatives that are analyzed in the EIR. If the No Project Alternative is the environmentally superior alternative, an EIR must also identify an environmentally superior alternative among the other alternatives (CEQA Guidelines Section 15126.6(e)(2)). The environmentally superior alternative is that alternative with the least adverse environmental impacts when compared to the proposed Project.

Table 5.0-1 presents a comparison of the alternative Project impacts with those of the proposed Project. As shown in the table, the No Project (No Build) Alternative is the environmentally superior alternative. However, as required by CEQA, when the No Project (No Build) Alternative is the environmentally superior alternative, the environmentally superior alternative among the others must be identified. Therefore, the Multiple Building Alternative would be the next environmentally superior alternative because this alternative would reduce impacts related to noise and transportation. However, the Multiple Building Alternative would not fully meet all of the Project objectives.

TABLE 5.0-1: COMPARISON OF ALTERNATIVE PROJECT IMPACTS TO THE PROPOSED PROJECT

ENVIRONMENTAL ISSUE	*NO PROJECT (NO BUILD) ALTERNATIVE*	*MULTIPLE BUILDING ALTERNATIVE*	*MAXIMUM FAR ALTERNATIVE*
Aesthetics and Visual Resources	Less (Best)	Greater (2nd Best)	Greater (3rd Best)
Air Quality	Less (Best)	Equal (2nd Best)	Greater (3rd Best)
Geology and Soils	Less (Best)	Equal (2nd Best)	Equal (3rd Best)
Greenhouse Gases, Climate Change and Energy	Less (Best)	Equal (2nd Best)	Greater (3rd Best)
Hazards and Hazardous Materials	Less (Best)	Equal (2nd Best)	Equal (3rd Best)
Hydrology and Water Quality	Less (Best)	Equal (2nd Best)	Equal (3rd Best)
Noise	Less (Best)	Less (2nd Best)	Greater (3rd Best)
Transportation and Circulation	Less (Best)	Less (2nd Best)	Greater (3rd Best)

GREATER = GREATER IMPACT THAN THAT OF THE PROPOSED PROJECT

LESS = LESS IMPACT THAN THAT OF THE PROPOSED PROJECT

EQUAL = NO SUBSTANTIAL CHANGE IN IMPACT FROM THAT OF THE PROPOSED PROJECT

This page intentionally left blank.

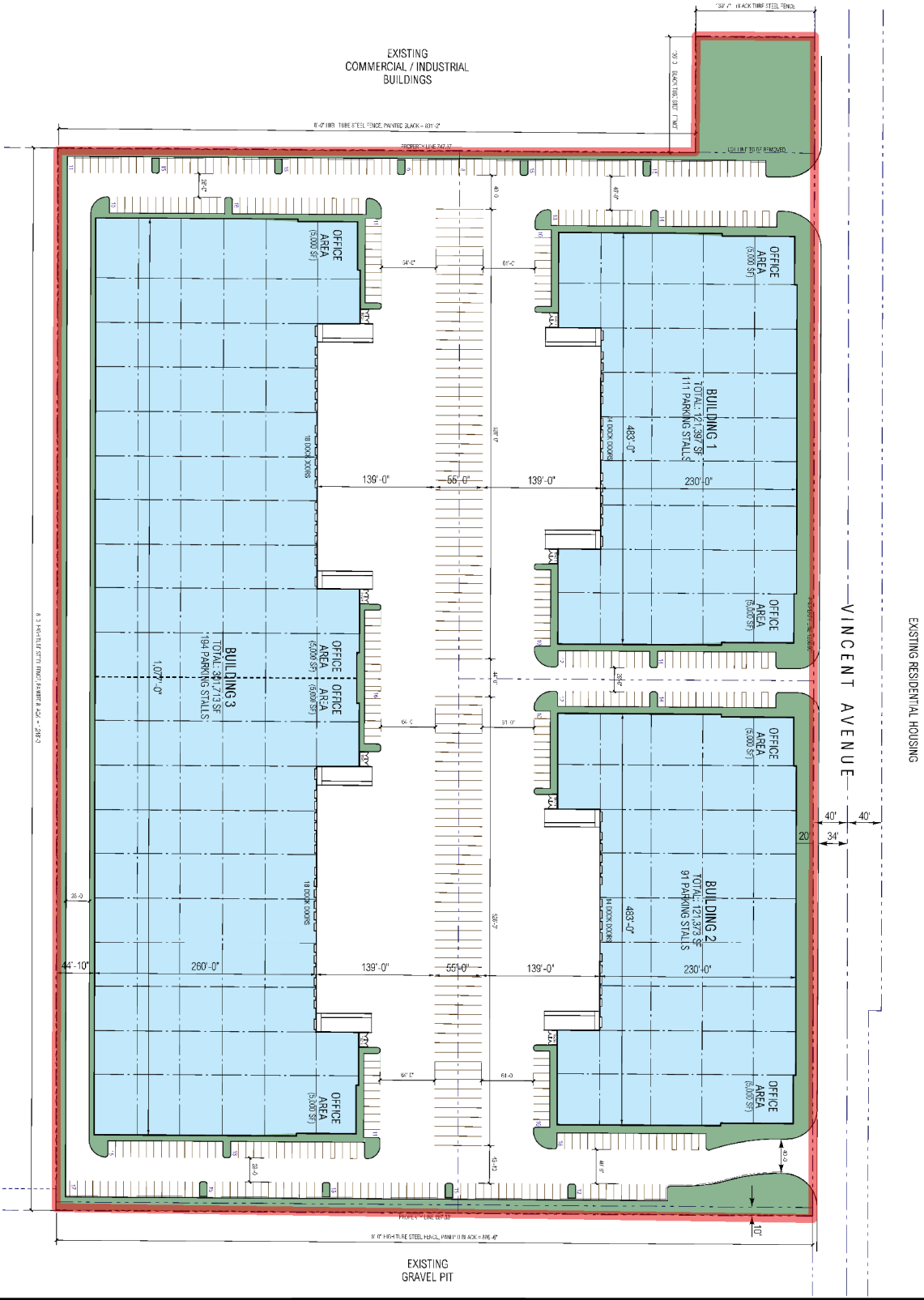

Legend

Project Boundary

N

0 50 100

Feet

CITY OF IRWINDALE
SWC VINCENT AVENUE AND ARROW HIGHWAY

Figure 5.0-1. Multiple Building Alternative

Source: RGA Office of Architectural Design, Site Plan, 12/10/19.
Map date: December 31, 2019.

De Novo Planning Group
A Land Use Planning, Design, and Environmental Firm

This page intentionally left blank.

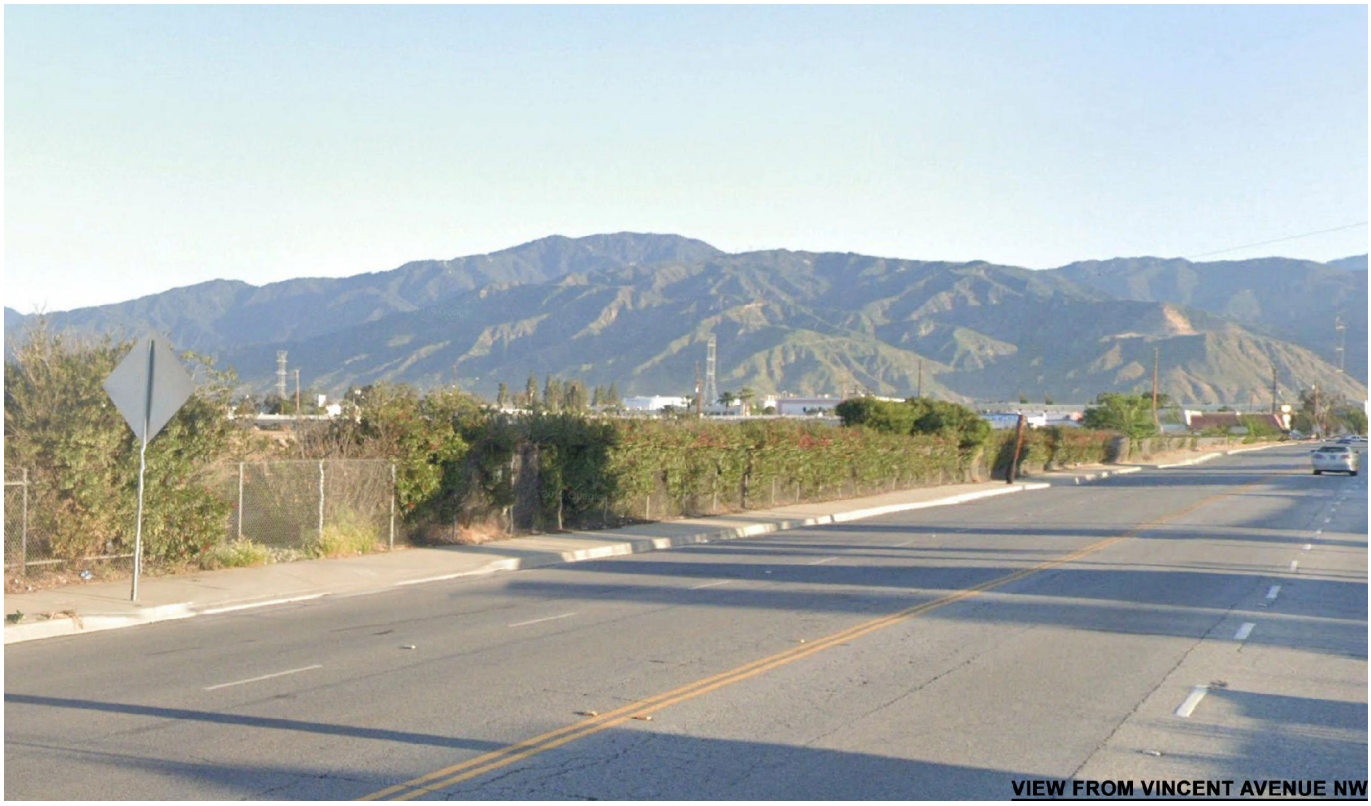



CITY OF IRWINDALE
SWC VINCENT AVENUE AND ARROW HIGHWAY

Figure 5.0-2a. Visual Simulations
From Vincent Avenue NW

Map date: August 19, 2020.

De Novo Planning Group
A Land Use Planning, Design, and Environmental Firm

This page intentionally left blank.





CITY OF IRWINDALE
SWC VINCENT AVENUE AND ARROW HIGHWAY

Figure 5.0-2b. Visual Simulations
From Vincent Avenue SW

Map date: August 19, 2020.

This page intentionally left blank.





CITY OF IRWINDALE
SWC VINCENT AVENUE AND ARROW HIGHWAY

Figure 5.0-2c. Visual Simulations
From Allen Drive W

Map date: August 19, 2020.

This page intentionally left blank.

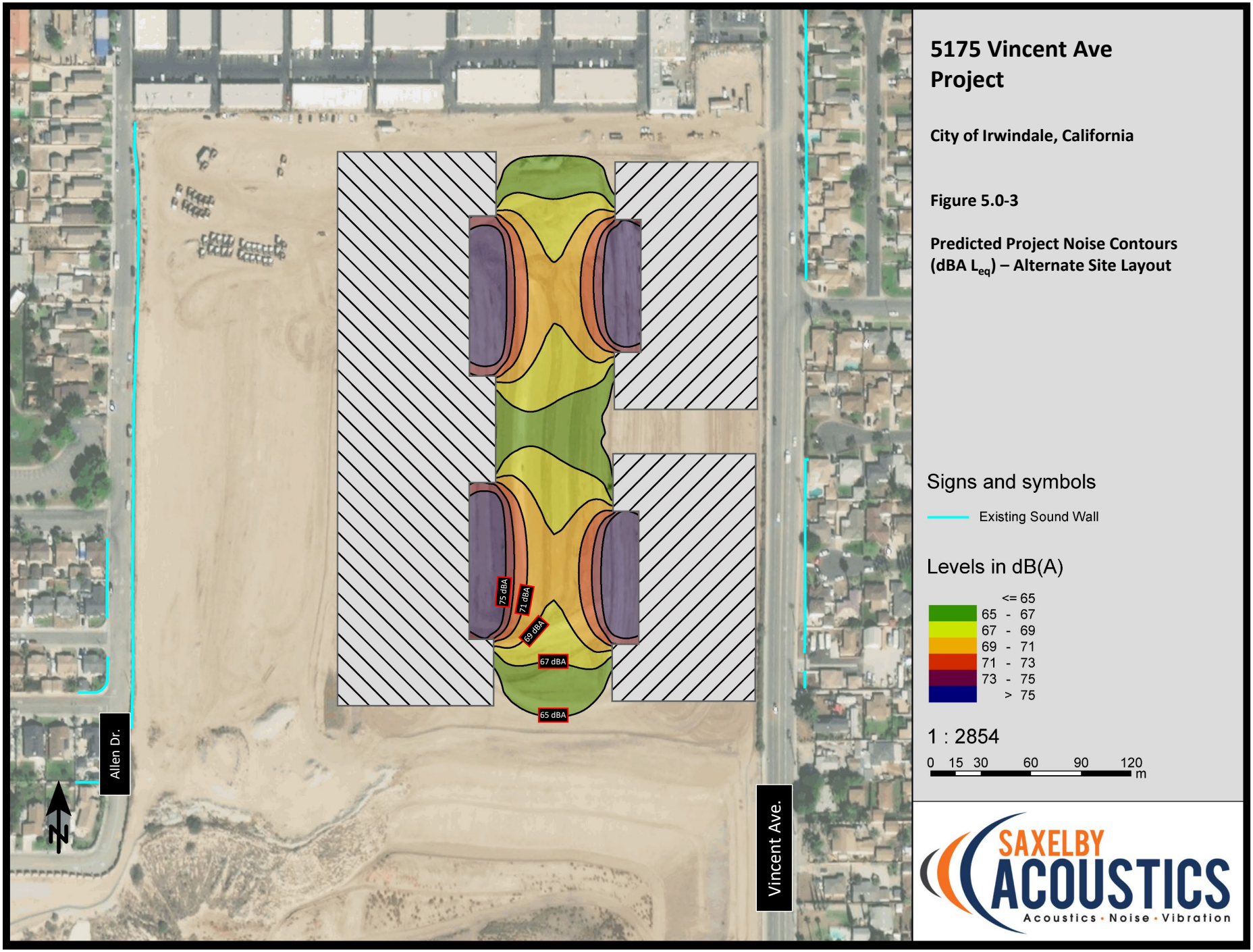

5175 Vincent Ave Project

City of Irwindale, California

Figure 5.0-3

Predicted Project Noise Contours (dBA L_{eq}) – Alternate Site Layout

Signs and symbols

Existing Sound Wall

Levels in dB(A)

<= 65
65 - 67
67 - 69
69 - 71
71 - 73
73 - 75
> 75

1 : 2854

0 15 30 60 90 120 m

SAXELBY ACOUSTICS
Acoustics · Noise · Vibration

This page intentionally left blank.

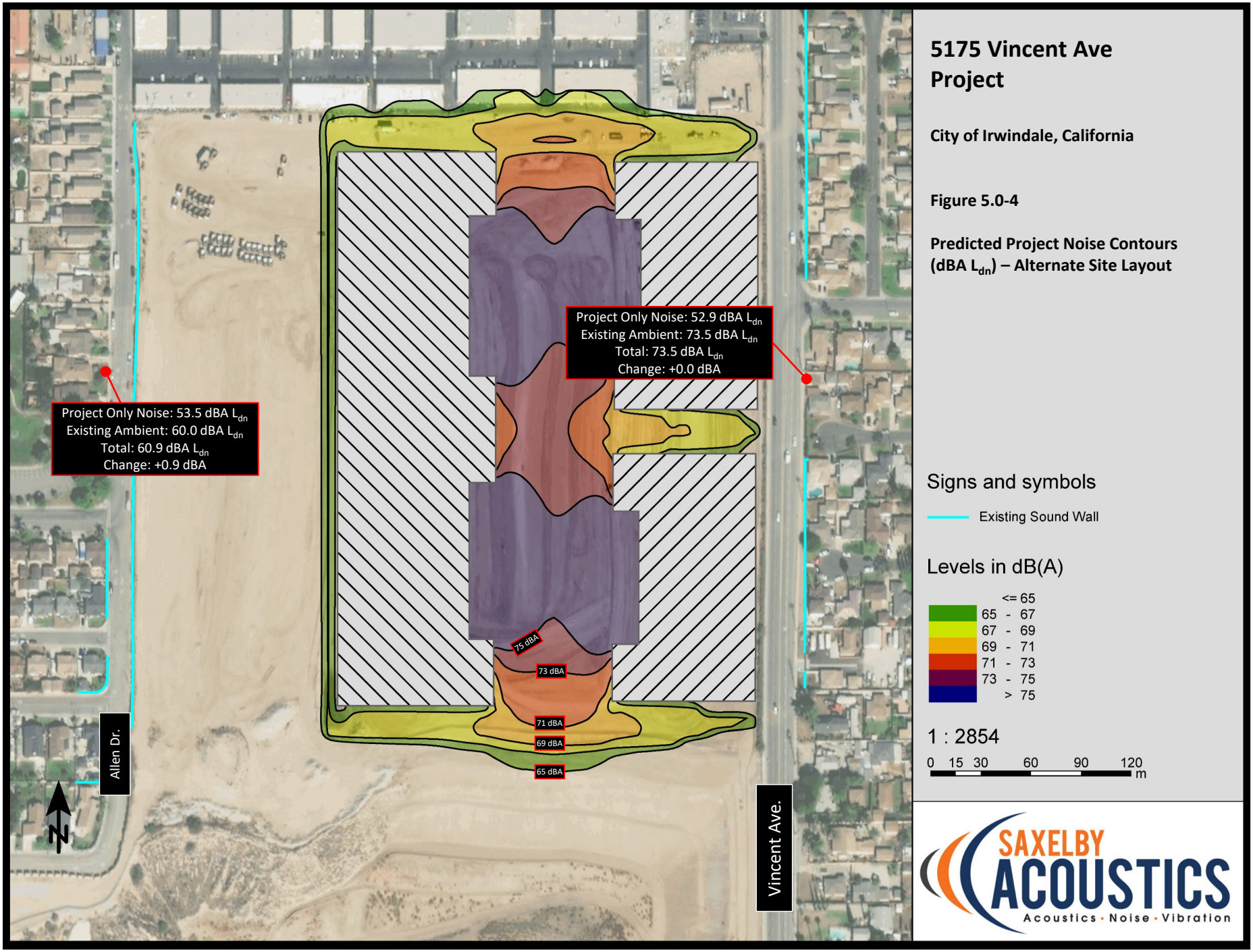

5175 Vincent Ave Project

City of Irwindale, California

Figure 5.0-4

Predicted Project Noise Contours (dBA L_{dn}) – Alternate Site Layout

SAXELBY ACOUSTICS
Acoustics · Noise · Vibration

This page intentionally left blank.

REPORT PREPARERS

City of Irwindale

Marilyn Simpson ..... Community Development Manager/City Planner

Brandi Jones ..... Senior Planner

Daniel Co ..... Assistant Engineer

Adrian Guerra ..... City Attorney

De Novo Planning Group

Steve McMurtry ..... Principal Planner/Project Manager

Elise Carroll ..... Senior Planner

Josh Smith ..... Associate Planner

Jeff Setterlund ..... Associate Planner

Zach Dahla ..... Associate Planner

Ganddini Group – Traffic Consultant

Giancarlo Ganddini ..... Principal

Saxelby Acoustics – Noise Consultant

Luke Saxelby, INCE Bd. Cert. ..... Principal Consultant

This page intentionally left blank.

REFERENCES

Association of Environmental Professionals. 2020. 2020 California Environmental Quality Act (CEQA) Statute and Guidelines. January 1, 2020. Available: https://www.califaep.org/docs/2020_ceqa_book.pdf

Azusa Light & Water. 2015 Urban Water Management Plan. June 2016.

Bay Area Air Quality Management District (BAAQMD). 2017. Spare the Air: Cool the Climate. April 2017. San Francisco, CA. Accessed: August 5, 2020. Available: http://www.baaqmd.gov/~/media/files/planning-and-research/plans/2017-clean-air-plan/attachment-a_-proposed-final-cap-vol-1-pdf.pdf?la=en

C. Donald Ahrens. 2006. Meteorology Today: An Introduction to Weather, Climate, & the Environment.

California Air Pollution Control Officers Association (CAPCOA). 2016. Air Toxics Hotspot Program. Available: http://www.capcoa.org/wp-content/uploads/2016/08/CAPCOA%20Prioritization%20Guidelines%20-%20August%202016%20FINAL.pdf

California Air Pollution Control Officers Association (CAPCOA). 2017. CalEEMod version 2016.3.2. November 2017. Available: http://www.caleemod.com/.

California Air Resources Board (CARB). 2005. Air Quality and Land Use Handbook: A Community Health Perspective. Available: https://www.arb.ca.gov/ch/landuse.htm

California Air Resources Board (CARB). 2014. Background Material: Almanac of Emissions and Air Quality 2013 Edition - Chapter 4 Regional Trends and Forecasts. Available: https://ww3.arb.ca.gov/aqd/almanac/almanac13/chap413.htm

California Air Resources Board (CARB). 2014a. 2020 Statewide Greenhouse Gas Emissions and the 2020 Target. Available: https://ww3.arb.ca.gov/cc/inventory/data/misc/2020_forecast_base0911_2015-01-22.pdf

California Air Resources Board (CARB). 2014b. First Update to the Climate Change Scoping Plan. May 2014. Available: https://www.arb.ca.gov/cc/scopingplan/2013_update/first_update_climate_change_scoping_plan.pdf

California Air Resources Board (CARB). 2016b. California Climate Strategy. January 29, 2016. Available: http://docketpublic.energy.ca.gov/PublicDocuments/15-RETI-02/TN210091_20160129T154626_California_Climate_Strategy_CARB_for_RETI_20_Plenary_Meeting_on.pdf

7.0 REFERENCES

California Air Resources Board (CARB). 2017c. California's 2017 Climate Change Scoping Plan. November 2017. Available: https://www.arb.ca.gov/cc/scopingplan/scoping_plan_2017.pdf

California Air Resources Board (CARB). 2019a. Area Designations Map/State and National. Available: http://www.arb.ca.gov/desig/adm/adm.htm.

California Air Resources Board (CARB). 2019b. EMFAC2017 Web Database. Available: https://www.arb.ca.gov/emfac/2017/?_ga=2.20421496.1398984907.1573588491-982950436.1560338559

California Air Resources Board (CARB). 2019c. California Ambient Air Quality Standards (CAAQS). Available: http://www.arb.ca.gov/research/aaqs/caaqs/caaqs.htm

California Air Resources Board (CARB). 2019d. 2016 SIP Emission Projection Data. Statewide. Available: https://www.arb.ca.gov/app/emsinv/2017/emssumcat_query.php?F_YR=2012&F_DIV=-4&F_SEASON=A&SP=SIP105ADJ&F_AREA=CA#5

California Air Resources Board (CARB). 2019e. AQMIS 2. Air Quality Data (PST) Query Tool. Accessed on August 5, 2020. Available: https://www.arb.ca.gov/aqmis2/aqdselect.php.

California Air Resources Board (CARB). 2019f. ARB Databases: Aerometric Data Analysis and Management System (ADAM). Accessed on August 5, 2020. Available: https://www.arb.ca.gov/adam

California Air Resources Board (CARB). 2020. California Ambient Air Quality Standards (CAAQS). Available: http://www.arb.ca.gov/research/aaqs/caaqs/caaqs.htm

California Climate Change Center. 2006. Our Changing Climate: Assessing the Risks to California. Available: http://climate.calcommons.org/bib/our-changing-climate-assessing-risks-california-summary-report-california-climate-change-center

California Department of Conservation. 2002. California Geological Survey, Note 36.

California Department of Conservation, Division of Oil, Gas & Geothermal Resources. 2016.

California Department of Forestry and Fire Protection. June 2008. Irwindale Fire Hazard Severity Zones in LRA. Accessed May 2020. Available at: https://osfm.fire.ca.gov/media/5823/irwindale.pdf.

California Department of Forestry and Fire Protection. November 2007. Fire Hazard Severity Zones in State Responsibility Areas. Accessed May 2020. Available at: https://osfm.fire.ca.gov/media/6636/fhszs_map.pdf.

California Department of Toxic Substances Control. DTSC's Hazardous Waste and Substances Site List - Site Cleanup (Cortese List). Available: https://dtsc.ca.gov/dtscs-cortese-list/

California Department of Toxic Substances Control. 2007. Envirostor Data Management System. Available: http://www.envirostor.dtsc.ca.gov/public/

California Department of Transportation (Caltrans). 2014. Air Quality Conformity Analysis Annotated Outline. Posted 2/12/2016. Available: https://dot.ca.gov/programs/environmental-analysis/standard-environmental-reference-ser/forms-templates#conformity

California Department of Transportation. 2020. Officially Designated State Scenic Highways. Available: <https://dot.ca.gov/programs/design/lap-landscape-architecture-and-community-livability/lap-liv-i-scenic-highways>.

California Division of Mines and Geology. 1997. Guidelines for Evaluating Seismic Hazards in California. CDMG Special Publication 117.

California Energy Commission (CEC). 2012. Energy Almanac. Available: https://www.energy.ca.gov/data-reports/energy-almanac

California Energy Commission (CEC). 2013. Available: https://energyarchive.ca.gov/title24/2013standards/rulemaking/documents/2013_Building_Energy_Efficiency_Standards_FAQ.pdf

California Energy Commission (CEC). 2015. 2016 Building Energy Efficiency Standards Adoption Hearing. June 10, 2015. Available at: https://www.calbo.org/sites/main/files/file-attachments/2015-06-10_adoption_hearing_presentation.pdf?1520982919

California Energy Commission (CEC). 2017. California Energy Commission – Tracking Progress. Available at: https://www.energy.ca.gov/data-reports/tracking-progress

California Energy Commission (CEC). 2018. California Energy Consumption Database. Available: ecdms.energy.ca.gov

California Energy Commission (CEC). 2019 Building Energy Efficiency Standards. Abstract, pg. 5.

California Energy Commission (CEC). 2020. California Greenhouse Gas Emission Inventory – 2019 Edition. Accessed March 10, 2020. Available at: https://ww2.arb.ca.gov/ghg-inventory-data

California Environmental Protection Agency. 2010. Climate Action Team Report to Governor Schwarzenegger and the Legislature. December 2010. Available: https://ww2.energy.ca.gov/2010publications/CAT-1000-2010-005/CAT-1000-2010-005.PDF

California Geological Survey. 2019. Seismic Shaking Hazards in California Based on the USGS/CGS Probabilistic Seismic Hazards Assessment (PSHA) Model. Available at: <http://www.conservation.ca.gov/cgs/rghm/psha>.

California Geological Survey. 1999, Revised 2002. Simplified Fault Activity Map of California. Compiled by Charles W. Jennings and George J. Saucedo.

7.0 REFERENCES

California Geological Survey. 1992. Fault Rupture Hazard Zones in California, Alquist-Priolo Special Studies Zone Act of 1972 with Index to Special Studies Zones Maps.

California Geological Survey (formerly California Division of Mines and Geology, CDMG) Special Publication 42, Revised 1992. State of California Department of Conservation.

California Public Utilities Commission (CPUC). 2018. California Renewables Portfolio Standard (RPS). Available: http://www.cpuc.ca.gov/RPS_Homepage/

California Water Resources Control Board. 2020. GeoTracker. Available: https://geotracker.waterboards.ca.gov/

Central Intelligence Agency (CIA). 2009. The World Factbook 2009. Available: https://www.cia.gov/library/publications/download/download-2009/

City of Irwindale. City of Irwindale Municipal Code. Current Ordinances through 686, Codified Ordinances through 731, Supplement No. 13.

City of Irwindale. Draft Environmental Impact Report (SCH No. 2005071047) City of Irwindale General Plan Update. September 2006.

City of Irwindale. City of Irwindale General Plan Update. June 2008.

City of Irwindale. Commercial and Industrial Design Guidelines. Adopted January 14, 2016.

City of Irwindale City Council Hearing. (2019). 'Item No. 2B: Acceptance of Manning Pit Remediation and Grading Project'. In City Council Minutes January 23, 2019. City of Irwindale: Council Chambers.

City of Irwindale. Natural Hazard Mitigation Plan. Adopted: February 27, 2013.

County of Los Angeles. 2019 County of Los Angeles All-Hazards Mitigation Plan. October 4, 2019.

County of Los Angeles Department of Public Works. Low Impact Development Standards Manual. February 2014.

De Novo Planning Group. 2020. Analysis of Public Health Risks for the 5175 Vincent Avenue Project.

ENVIRON. 2013. Appendix A: Calculation Details for CalEEMod. Available: http://www.aqmd.gov/docs/default-source/caleemod/caleemod-appendixa.pdf?sfvrsn=2

Ganddini Group, Inc. Vincent Avenue Industrial Building Traffic Impact Analysis, City of Irwindale. June 30, 2020 (Updated December 15, 2020).

Google. Google Earth Pro Version 7.3.2.5776 (32-bit). March 5, 2019.

Intergovernmental Panel on Climate Change (IPCC). 2013. "Climate Change 2013: The Physical Science Basis, Summary for Policymakers." Available: http://www.climatechange2013.org/images/report/WG1AR5_SPM_FINAL.pdf

International Energy Agency. 2018. FAQs: Oil. Available: https://www.eia.gov/tools/faqs/faq.php?id=38&t=6

Los Angeles Regional Water Quality Control Board (LARWQCB). Basin Plan for the Coastal Watersheds of Los Angeles and Ventura Counties. September 11, 2014.

LARWQCB. Termination of Waste Discharge Requirements - Manning Pit Inert Landfill, Irwindale, California (File No. 61-101, Order No. R4-2019-0107, Ci-6149, Geotracker Global Id L10002323364). September 12, 2019.

Main San Gabriel Watermaster (MSGBW). Five-Year Water Quality and Supply Plan. November 2019. Available: https://www.watermaster.org/reports

MSGBW. MSGBW 2018-2019 Annual Report. October 2019. Available: https://www.watermaster.org/reports

Saxelby Acoustics. Environmental Noise Assessment, 5175 Vincent Avenue, City of Irwindale, California (Project # 200107). June 11, 2020.

Southern California Association of Governments (SCAG). 2016. Final 2016-2040 Regional Transportation Plan/Sustainable Communities Strategy. Adopted April 2016. Available: http://scagrtpscs.net/Documents/2016/final/f2016RTPSCS.pdf

State of California Regional Water Quality Control Board – Los Angeles Region. State of the Watershed – Report on Surface Water Quality: The San Gabriel River Watershed. June 2000.

United States Army Corps of Engineers. Santa Fe Dam Basin Master Plan and Environmental Assessment. September 2011.

United States Climate Data. 2020. Climate data for Irwindale CA. Available: usclimatedata.com

United States Department of Agriculture, Natural Resources Conservation Service (NRCS) Web Soil Survey (WSS). Available at: http://websoilsurvey.sc.egov.usda.gov/App/HomePage.htm.

United States Energy Information Administration (U.S. EIA). 2020. California State Energy Profile. Last updated January 16, 2020. Available: https://www.eia.gov/state/print.php?sid=CA

United States Energy Information Administration (U.S. EIA). 2019. 2018 Total System Electric Generation. Available: http://www.energy.ca.gov/almanac/electricity_data/total_system_power.html

United States Environmental Protection Agency (USEPA). 2015. National Ambient Air Quality Standards (NAAQS). Available: https://www.epa.gov/criteria-air-pollutants/naaqs-table

7.0 REFERENCES

United States Environmental Protection Agency (USEPA). 2016. Basic Information about Carbon Monoxide (CO) Outdoor Air Pollution. Accessed: July 11, 2019. Available: https://www.epa.gov/co-pollution/basic-information-about-carbon-monoxide-co-outdoor-air-pollution#Effects

United States Environmental Protection Agency (USEPA). 2017. Sulfur Dioxide Concentrations – EPA. Accessed: July 11, 2019. Available: https://cfpub.epa.gov/roe/indicator_pdf.cfm?i=91

United States Environmental Protection Agency (USEPA). 2018. National Air Quality: Status and Trends of Key Air Pollutants. Accessed: July 11, 2019. Available: https://www.epa.gov/air-trends

United States Environmental Protection Agency (USEPA). 2019a. Health Effects of Ozone Pollution. Accessed: July 11, 2019. Available: https://www.epa.gov/ground-level-ozone-pollution/health-effects-ozone-pollution

United States Environmental Protection Agency (USEPA). 2019b. Health Effects of Ozone In the General Population. Accessed: July 11, 2019. Available: https://www.epa.gov/ozone-pollution-and-your-patients-health/health-effects-ozone-general-population

United States Environmental Protection Agency (USEPA). 2019c. Health and Environmental Effects of Particulate Matter (PM). Accessed: July 12, 2019. Available: https://www.epa.gov/pm-pollution/health-and-environmental-effects-particulate-matter-pm

United States Environmental Protection Agency (USEPA). 2019d. Basic Information About Lead Pollution. Accessed: July 12, 2019. Available: https://www.epa.gov/lead-air-pollution/basic-information-about-lead-air-pollution#how

United States Environmental Protection Agency. 2020. National Priorities List (NPL) of Superfund Sites and Proposed NPL Sites. Available: http://www.epa.gov/superfund/npl-site-status-information

United States Environmental Protection Agency. 2020. Toxic Release Inventory (TRI) Program. Available: http://www.epa.gov/toxics-release-inventory-tri-program

United States Environmental Protection Agency. 2020. Comprehensive Environmental Response, Compensation and Liability Information System (CERCLIS) Search. Available: http://www.epa.gov/enviro/cerclis-search

United States Green Building Council. 2016. LEED 2009 for New Construction and Major Renovations. USGBC Member Approved November 2008 (Updated July 2016). Available: https://www.usgbc.org/resources/leed-new-construction-v2009-current-version

WestLAND Group. Vincent Avenue Industrial Building Hydrology/LID Report. May 15, 2017.

Appendix A

Initial Study, Notice of Preparation, and NOP Comments

INITIAL STUDY / NOTICE OF PREPARATION

FOR THE

5175 VINCENT AVENUE PROJECT

FEBRURARY 2020

Prepared for:

City of Irwindale
Community Development Department
Planning Division
5050 North Irwindale Avenue
Irwindale, CA 91706

Prepared by:

De Novo Planning Group
1020 Suncast Lane, Suite 106
El Dorado Hills, CA 95762
(916) 580-9818

De Novo Planning Group

A Land Use Planning, Design, and Environmental Firm

INITIAL STUDY / NOTICE OF PREPARATION

FOR THE

5175 VINCENT AVENUE PROJECT

FEBRUARY 2020

Prepared for:

City of Irwindale
Community Development Department
Planning Division
5050 North Irwindale Avenue
Irwindale, CA 91706

Prepared by:

De Novo Planning Group
1020 Suncast Lane, Suite 106
El Dorado Hills, CA 95762
(916) 580-9818

Notice of Scoping Meeting and Preparation of a Draft Environmental Impact Report

DATE OF NOTICE: February 10, 2020

TO: State Clearinghouse
State Responsible Agencies
State Trustee Agencies
Other Public Agencies
Organizations and Interested Persons

SUBJECT: Notice of Scoping Meeting and Preparation of a Draft Environmental Impact Report

PROJECT TITLE: 5175 Vincent Avenue Project

PROJECT LOCATION: 5175 Vincent Avenue, Irwindale, CA 91706

LEAD AGENCY: City of Irwindale

LEAD AGENCY CONTACT: Brandi Jones, Senior Planner
City of Irwindale, Community Development Department
Planning Division
5050 North Irwindale Avenue
Irwindale, CA 91706
Phone: (626) 430-2260
Email: BJones@IrwindaleCA.gov

This Notice of Preparation (NOP) has been prepared to notify agencies and interested parties that the City of Irwindale (City), as the Lead Agency, will prepare an Environmental Impact Report (EIR) pursuant to the California Environmental Quality Act (CEQA) for the proposed 5175 Vincent Avenue Project (proposed project). The project description, location, and the potential environmental effects of the project are included below in this NOP. The City requests your comments as to the scope and content of the EIR. Comments must be submitted in writing pursuant to the directions below. If you represent an agency, the City is seeking comments as to the scope and content of the environmental information in the document which is germane to your agency's statutory responsibilities in connection with the proposed project. To the extent that your agency has authority to issue permits or take other actions related to the project, your agency will need to use the EIR prepared by the City when considering your permitting decisions or other approval for the project.

In accordance with the time limits established by CEQA, the City requests comments be received by the close of business on March 11, 2020. **Please send your comments, including a return address and contact name, via mail or email to the identified Lead Agency Contact.**

SCOPING MEETING: In accordance with CEQA Guidelines 15082, a public Scoping Meeting will be held on Thursday, February 20, 2020, at 6:00 PM at the Dan Diaz Recreation Center, located at 16053 Calle de Paseo, Irwindale, CA.

PROJECT LOCATION: The 5175 Vincent Avenue Project site (project site) is located north of a Los Angeles County-owned pit, east of Allen Drive, south of Arrow Highway, and west of Vincent Avenue in Irwindale, California. The project site totals approximately 26.05 acres and is comprised of two vacant parcels; one of which is an undeveloped, recently filled, former aggregate mine pit known as the Manning Pit. The Assessor's Parcel Numbers (APNs) for the project site are 8417-034-015 and 8417-034-016 (formally APNs: 8417-034-904, 8417-034-910, and 8417-034-911).

PROJECT DESCRIPTION: The City has received an application for the development of a 545,735 square feet (sf) high-cube industrial warehouse building. The building would be a concrete tilt-up; approximately 540,447 sf would be ground floor area and 5,000 sf would be mezzanine area. The site currently has two General Plan designations: "Residential" and "Industrial/Business Park". An additional application is required to change the 6.93-acre portion of the parcel from "Residential" to "Industrial/Business Park," which is consistent with the land use on the balance of the parcel. The application considers the development of the entire parcel as a single use industrial project. This amendment would designate the entire parcel as "Industrial/Business Park" per the General Plan and also consistent with the M-2 (Heavy Manufacturing) zoning designation.

A typical high-cube warehouse has a high level of on-site automation and logistics management. The automation and logistics enable highly-efficient processing of goods through the high-cube warehouse. High-cube warehouses are generally grouped into five types: transload facility, short-term storage facility, fulfillment center, parcel hub, and cold storage facility. The proposed project, however, specifically excludes fulfillment center, parcel hub, and cold storage facility as a potential end user of the building. The applicant has expressly prohibited these three uses (fulfillment center, parcel hub, and cold storage facility), and has agreed to condition the project to further prohibit their use. Other end users could include light industrial or manufacturing uses.

There is not a specific end user/business established for the building at this time. There are a variety of possible businesses that could occupy the building, and operate their business out of the proposed building. As mentioned, there are certain uses that are prohibited from occupying the building. The uses for the proposed building may include any of the following: Manufacturing Warehouse, Light Industrial, High-Cube Short-term, and High-Cube Transload. These uses are allowed under the Industrial/Business Park General Plan Land Use Designation and M-2 (Heavy Manufacturing) zoning designation.

The project also includes circulation and parking improvements on-site. The proposed project would connect to existing City infrastructure to provide water, sewer, and storm drainage utilities.

The City of Irwindale is the Lead Agency for the proposed project, pursuant to the State Guidelines for Implementation of CEQA, Section 15050. The document will be used by the City of Irwindale to take the following actions:

- Adoption of the EIR;
- Adoption of the Mitigation Monitoring and Reporting Program (MMRP);
- Site Plan and Design Review (Discretionary Application) to approve the proposed site plan, which includes site and building configuration, design, location, and impact of the proposed use, and the compliance of the project with the established Zoning Code standard and the "City of Irwindale Commercial and Industrial Design Guidelines";
- General Plan Amendment to approve the change of the current General Plan designation from "Residential" to "Industrial/Business Park" for a portion of APN 8417-034-016; and
- Approval of the Lot Line Adjustment to combine APNs 8417-034-015 and 8417-034-016.

The following agencies may be required to issue permits or approve certain aspects of the proposed project:

- Regional Water Quality Control Board (RWQCB) – Construction activities would be required to be covered under the National Pollution Discharge Elimination System (NPDES);
- RWQCB – The Storm Water Pollution Prevention Plan (SWPPP) would be required to be approved prior to construction activities pursuant to the Clean Water Act;
- South Coast Air Quality Management District (SCAQMD) – Construction activities would be subject to the SCAQMD permits, codes, and requirements.

INITIAL STUDY: An Initial Study has been prepared for this project. The Initial Study identifies environmental areas/issues that would result in No Impact or a Less than Significant Impact, and environmental areas/issues that would result in a Potentially Significant Impact. All Potentially Significant Impact areas/issues will be addressed in greater detail in the Draft EIR. Areas/issues that would result in No Impact or a Less than Significant Impact, as identified in the Initial Study, will not be addressed further in the Draft EIR.

A copy of the Initial Study, including additional information on the project proposal, is on the City's website at: https://www.irwindaleca.gov/index.aspx?nid=400.

POTENTIAL ENVIRONMENTAL EFFECTS OF THE PROPOSED PROJECT: The Draft EIR will examine some of the environmental areas contained in Appendix G of the State CEQA Guidelines. The topics to be addressed in the Draft EIR include: Aesthetics, Air Quality, Energy, Geology and Soils, Greenhouse Gas Emissions, Hazards and Hazardous Materials, Hydrology and Water Quality, Noise, Transportation, Cumulative Impacts, and Growth Inducing Impacts. The content of the Draft EIR will be subject to input received during the NOP comment period.

Date: 02/06/2020 Signature: _____

This page left intentionally blank.

TABLE OF CONTENTS

Table of Contents I
Initial Study Checklist 2
Lead Agency Name and Address 2
Project Location and Setting 2
Project Description 6
Alternatives 10
Alternatives Considered 12
Environmental Factors Potentially Affected 31
Environmental Checklist 34
I. AESTHETICS 34
II. AGRICULTURE AND FORESTRY RESOURCES 36
III. AIR QUALITY 38
IV. BIOLOGICAL RESOURCES 40
V. CULTURAL RESOURCES 48
VI. ENERGY 49
VII. GEOLOGY AND SOILS 50
VIII. GREENHOUSE GAS EMISSIONS 53
IX. HAZARDS AND HAZARDOUS MATERIALS 54
X. HYDROLOGY AND WATER QUALITY 56
XI. LAND USE AND PLANNING 58
XII. MINERAL RESOURCES 59
XIII. NOISE 60
XIV. POPULATION AND HOUSING 61
XV. PUBLIC SERVICES 62
XVI. RECREATION 65
XVII. TRANSPORTATION 66
XVIII. TRIBAL CULTURAL RESOURCES 67
XIX. UTILITIES AND SERVICE SYSTEMS 69
XX. WILDFIRE 73
XXI. MANDATORY FINDINGS OF SIGNIFICANCE 75
References 76

INITIAL STUDY CHECKLIST

PROJECT TITLE

5175 Vincent Avenue Project

LEAD AGENCY NAME AND ADDRESS

City of Irwindale
Community Development Department
Planning Division
5050 North Irwindale Avenue
Irwindale, CA 91706

CONTACT PERSON AND PHONE NUMBER

Brandi Jones, Senior Planner
City of Irwindale
Community Development Department
Planning Division
5050 North Irwindale Avenue
Irwindale, CA 91706
BJones@IrwindaleCA.gov
(626) 430-2260

PROJECT SPONSOR'S NAME AND ADDRESS

Mark Gabay
Charles Company
9034 West Sunset Boulevard
West Hollywood, CA 90069

PROJECT LOCATION AND SETTING

The 5175 Vincent Avenue Project site (project site) is located north of a Los Angeles County-owned pit, east of Allen Drive, south of Arrow Highway, and west of Vincent Avenue in Irwindale, California (Figures 1 and 2). The project site totals approximately 26.05 acres and is comprised of two vacant parcels; one of which is an undeveloped, recently filled, former aggregate mine pit known as the Manning Pit (Figure 3). The 2020 Assessor's Parcel Numbers (APNs) for the project site are 8417-034-015 and 8417-034-016 (formally APNs: 8417-034-904, 8417-034-910, and 8417-034-911) (Figure 4). The elevation of the site ranges from approximately 400 feet to 460 feet above mean sea level (MSL). The property is immediately adjacent to unincorporated Los Angeles County to the south and east.

HISTORICAL BACKGROUND

The project site is the general location of the former Irwindale Pit No. 1 (Manning Brothers Pit) Project, which proposed reclamation of the historic mining pit. Mining of the Manning Pit began in the 1930s and was completed in the 1970s. During mining operations, the pit was excavated to a maximum depth of 240 feet above mean sea level (msl), which equates to approximately 230 feet below ground surface (bgs). A portion of the site was subsequently used to dispose of silt, clay, and sand wash products (fines) from an on-site aggregate processing facility. The volume of the fine materials disposed of is estimated at 352,000 cubic yards.

The City of Irwindale acquired the northern portion of the pit (approximately 37 acres) in the late 1980s from the County of Los Angeles, and the County retained the remainder (approximately 45 acres) which is currently used as a supplemental water recharge basin in conjunction with the Irwindale Recharge Basin, located just to the west.

After its acquisition, the City began backfilling the site with a variety of construction debris (e.g., soil, concrete, asphalt, rebar, bricks, and cinder blocks) and other inert materials. At that time, no Quality Assurance/Quality Control (QA/QC) Program was performed to assure that the backfilling operation met the geotechnical considerations for future development of the site. However, backfilling was stopped in 1992 when it was discovered that improper filling methods had been used by the contractor. There was an estimated 665,000 cubic yards of rubble material placed over the estimated 352,000 cubic yards of fine materials. Therefore, the total estimated backfill volume that had been placed within the pit was about 1,017,000 cubic yards.

At that time, the Project site was surface mapped to establish the overall nature of backfill within the area. Surface mapping of the site confirmed that the upper layer of the pit consisted of various construction rubble as well as large voids. In addition, portions of the perimeter slopes were underlain by non-engineered fill and talus material. The surface mapping also revealed that relatively small wedges of engineered fill were under the perimeter slopes in the northwest corner of the Project site.

In October 2005, the City contracted with GeoLogic Associates to perform a field exploration program to characterize the historical backfill on the Project site. The exploration consisted of drilling five borings through the backfill material to native soil at various locations along the bottom of the pit. The purpose of the borings was to determine:

- The nature and types of backfill present in the pit;
- The volume of backfill present in the pit; and
- The current groundwater level below the pit.

The results of the exploration program confirmed that two distinct layers of backfill material existed. The upper layer consisted of very coarse construction rubble and varied in depth from approximately 27 to 39 feet below the current bottom of the pit surface. The borings indicated that the upper layer was highly voided with little soil mixed in the construction rubble. The lower level consisted of aggregate mining waste (e.g., fine to very fine-grained sand, very fine sandy silt, and silt) from the processing plant operation and varied from about 7 to 43 feet in depth. These 2005 boring results were consistent with the findings of an earlier investigation performed by Greystone Environmental Consultants in 2000.

The highest groundwater elevation observed during borings was 283 feet above msl. This elevation appears to be the highest groundwater elevation, because it reflects the record rainfall of the preceding winter of 2004/2005. This groundwater elevation may also reflect water mounding from the Los Angeles County storage and recharge operations just south of the City's site. Therefore, it was determined that approximately 55 feet of backfill material lies below the reported high groundwater level.

The boring results indicated that the historical backfill materials at the mine did not meet engineered backfill requirements specified in the City of Irwindale's *Guidelines for Above Water Backfilling of Open-Pit Mines* (November 22, 2005) or the applicable Building Codes. Consequently, the City proposed to partially or completely remove the historic fill, reprocess the material, and recompact the historical backfill in accordance with the current City and County

requirements. The City determined that as future (clean soil) fill material is brought to the site, it would be required to meet these guidelines.

In response to the geotechnical data and conclusions from the testing, the City decided to reclaim the Project site in accordance with the City and County codes and guidelines. The mining waste under the construction rubble would be inspected by a Geotechnical Engineer who would determine suitability to be left in place. Native alluvium material would not be removed. After reclamation, the City would then consider development proposals.

In the process of backfilling and grading, non-engineered backfill material would be excavated and stockpiled on the site. Clean soil that meets the general particle size guidelines set by the City for disposal above and below the water table would then be imported to the site and placed as compacted backfill. On-site stockpiled backfill that contains materials restricted for disposal in groundwater (e.g., asphalt and other materials) would be set aside for subsequent placement in the above-groundwater portion of the pit area. Some of the imported backfill would be blended with the on-site backfill so that the composited materials meet City and County requirements. When on-site backfill is depleted, the remainder of the site would be backfilled using clean soil. Materials unsuitable for backfill use would be removed from the site and disposed of in accordance with the applicable federal and State laws.

Compaction and other regulations dealing with the backfill materials are covered in the City of Irwindale's Building Code and Backfilling Guidelines, which identify material specifications, testing requirements, and other conditions for backfilling and grading. General material specifications include:

- Proper moisture levels;
- Fill materials placed deeper than 40 feet are required to be compacted to at least 93 percent; and
- Fill materials placed within 40 feet are required to be compacted to at least 90 percent.

It was estimated that approximately five million cubic yards of additional backfill material would be needed to fill the pit to near street level. All of these incoming materials would need to be screened to make sure they were not contaminated and met backfill requirements. It was estimated that backfilling and grading of the pit would take approximately six to seven years to complete assuming an annual rate of approximately 840,000 cubic yards of backfill materials. Backfill was estimated to require approximately 200 truck trips to the site daily.

The operation plan established that the maximum operating hours for the pit would be from 7:00 am to 5:00 pm Monday through Friday, and from 7:00 am through 4:00 pm on Saturday. On-site equipment was estimated to consist of 972G and 980 (G or H) loaders; 2,000- and 4,000-gallon watering trucks; 320C, 345B, or 365B excavators; rock, asphalt, or concrete crushers; 824C, 823C, D8R, or D10R bulldozers; dump and haul trucks; and other assorted equipment.

In October 2007, the former Irwindale Community Redevelopment Agency approved a License Agreement for Windrow Earth Transport (WET), Inc. to perform remediation and grading of the Manning Pit Project. The following is a summary of the scope of work for this project:

a. Remediate the existing uncertified rubble fill that was placed by K & K Contractor.
b. Complete the grading of the site with clean soil fill to final surface design elevation.

c. Pay for any required environmental and geotechnical oversight to ensure that all import and placed soil meets all regulatory guidelines and to provide all necessary certifications for a buildable site after the completion of the project.
d. Mitigate the silt and mining waste products using acceptable methods approved by the City Engineer's office.
e. Prepare final closure report to be submitted to State Regional Water Quality Control Board (RWQCB), as required by the Manning Pit Waste Discharge Requirements.

With the elimination of all redevelopment agencies in the State of California in 2012, the City Council approved the purchase of the Manning Pit from the Successor Agency to the Irwindale Community Redevelopment Agency in August 2014 in order to continue with the remediation and grading of the site. The Manning Pit Project was completed in January 2019. As required in the License Agreement, the operator submitted a request to the City to commence the process to close the project. According to the grading permit issued to the Windrow Earth Transport, Inc., the onsite drainage improvements and Storm Water Prevention measures were implemented in compliance with the current building code.

With the project acceptance by the City, a final closure package must be submitted to the State Regional Water Quality Control Board (RWQCB), as required by the Manning Pit Waste Discharge Requirements. In accordance with the License Agreement, the City Council approved the release of the project In Lieu Bond Fee in the amount of $210,000 from the Manning Project Trust Fund deposit account, to be returned to the Special Mining Fund Balance upon receiving the final approval from RWQCB. The City Council also authorized a Lot Line Adjustment to release the southerly ten foot area that is a part of the engineered buttress fill across the property boundary between the City Manning Pit and the Los Angeles County Flood Control District owned portion of the Manning Pit to the current property owner for future operation and maintenance as required by the City County Cooperative Agreement.

PUBLIC OUTREACH

On August 9, 2018, the Planning Division hosted a community meeting at the Irwindale Community Center. The purpose of the meeting was to provide an opportunity to review and comment on the proposed project, ask questions, and understand the process. Representatives from Five Points, LLC and City staff attended. The meeting was well attended and the primary areas of concern were current issues with dust and trucks, and the potential impact of the proposed project. Staff answered questions and made themselves available for assistance after the meeting via email and phone. Due to the project's speculative nature, staff indicated that there are many potential uses that are permitted by right due to the current zoning designation, but that certain uses would be not be allowed or would be subject to a Conditional Use Permit; these uses would require Planning Commission approval and be subject to a set of Conditions of Approval. On January 30, 2019, the General Plan Amendment and Site Plan and Design Review (DA) applications were continued to a date uncertain. The public hearing was opened for the continued item, which allowed for public comment. During the public comment period, residents from the City of Irwindale and unincorporated Los Angeles County spoke about the item.

The City prepared an Initial Study (IS) for the proposed project in 2018 to evaluate the anticipated environmental impacts associated with development of the project site in accordance with the application. A proposed Mitigated Negative Declaration was subsequently submitted to the State Clearinghouse for review on December 20, 2018 (State Clearinghouse # 2018121056). Public review of the document occurred from December 20, 2018 through January 22, 2019.

During the public review period, twelve comment letters were received as follows: California Air Resources Board, California Department of Justice (Bureau of Environmental Justice), California Department of Transportation, California Environmental Protection Agency (Department of Resources Recycling and Recovery), County of Los Angeles Public Health (Environmental Health Division), County Sanitation District of Los Angeles County, Gabrieleño Band of Mission Indians (Kizh Nation), Golden State Environmental Justice Alliance, South Coast Air Quality Management District, California Department of Toxic Substances Control, California Department of Justice (Bureau of Environmental Justice), and California Governor's Office of Planning and Research (State Clearinghouse and Planning Unit). These comment letters raised concerns regarding a variety of CEQA topics, and several commenters specifically suggested that an EIR is warranted. The City of Irwindale, in consideration of the comments and suggestions provided throughout the public outreach process to date, decided to prepare an EIR to address those specific concerns raised by the comment letters.

PROJECT DESCRIPTION

The proposed project is the development of 26.05 acres of land that was formerly used as a mining pit (Manning Pit) dating back to the 1930s. A reclamation process for the mine was completed and a closure report was approved by the City Council in January 2019 allowing for the development of the site for new development.

GENERAL PLAN AMENDMENT

The City of Irwindale General Plan specifically addresses development of the Manning Pit, a portion of which is the project site. The General Plan notes that the City owned the northern portion of the pit, which contains two parcels: 8417-034-912 and 8417-034-16. The western parcel on the Manning Pit (8417-034-912) is approximately 10 acres and is designated Residential. The eastern parcel is the project site, and contains 19.12 acres of Industrial/Business Park and 6.93 acres of Residential. The entire 26.05 acres is zoned M-2 "Heavy Manufacturing." This inconsistency between the General Plan land use designation and the Zoning is associated with the 6.93 acres of Residential land use where the designation doesn't align with the parcel boundary. The inconsistency between the General Plan and the zoning requires an amendment to bring the allowed uses/zoning into consistency before the project could be developed in a way that meets the project objectives.

The City has received an application to change the 6.93-acre portion of the parcel from "Residential" to "Industrial/Business Park," which is consistent with the land use on the balance of the parcel. The application involves the development of the entire parcel as a single use industrial project. This amendment would make the entire parcel a single use. The parcel to the west of the subject property would remain designated Residential.

The Industrial/Business Park General Plan land use designation allows for a variety of uses including: light industry, heavy industry, distribution, or commercial uses. The proposed project, however, is an industrial warehouse building, which is specifically allowed under the Industrial/Business Park land use and the M-2 "Heavy Manufacturing" zoning.

INDUSTRIAL WAREHOUSE BUILDING

Using the maximum floor-area-ratio (FAR) for the Industrial/Business Park designation (1.0), the development of the site would allow for the construction of 1,134,738 square feet (sf) of industrial uses, 832,867 sf of which is located on the 19.12 acres that is currently designated Industrial/Business Park under the existing General Plan land use. The application received by the City of Irwindale does not propose a building anywhere close to the maximum FAR for the

project site. Instead, the application submitted to the City includes an industrial warehouse building totaling 545,735 sf, which is approximately 48% of the maximum FAR allowed for this General Plan land use.

The proposed project includes development of a 545,735 sf industrial warehouse building. The building would be a concrete tilt-up. Approximately 540,447 sf would be ground floor area and 5,000 sf would be mezzanine area. The proposed site plan is shown on Figure 5.

POTENTIAL END-USERS/BUSINESSES

A high-cube warehouse is a building that typically has at least 200,000 gross sf of floor area, has a ceiling height of 24 feet or more, and is used primarily for the storage and/or consolidation of manufactured goods (and to a lesser extent, raw materials) prior to their distribution to retail locations or other warehouses. Given that the proposed project includes an industrial warehouse building totaling 545,735 square feet, it is classified as a high-cube warehouse building.

A typical high-cube warehouse has a high level of on-site automation and logistics management. The automation and logistics enable highly-efficient processing of goods through the high-cube warehouse. High-cube warehouses are generally grouped into five types: transload facility, short-term storage facility, fulfillment center, parcel hub, and cold storage facility. The proposed project, however, specifically excludes fulfillment center, parcel hub, and cold storage facility as a potential end user of the building. The applicant has indicated that these three uses (fulfillment center, parcel hub, and cold storage facility) are not proposed uses, and the applicant has agreed to conditions the project to prohibit the building from being used as such. Other end users could include light industrial or manufacturing uses.

There is not a specific end user/business established for the building at this time. There are a variety of possible businesses that could occupy the building, and operate their business out of the proposed building. As mentioned, there are certain uses that are prohibited from occupying the building. The uses for the proposed building may include any of the following: Manufacturing Warehouse, Light Industrial, High-Cube Short-term, and High-Cube Transload. These uses are allowed under the Industrial/Business Park land use designation and M-2 "Heavy Manufacturing" zoning designation.

CIRCULATION AND TRANSPORTATION

Regional access to the project area is provided by the I-605 Freeway to the west, I-10 Freeway to the south, and the I-210 Freeway to the north. Key north-south roadways providing local access include Irwindale Avenue, Vincent Avenue, and Lark Ellen Avenue. Key east-west roadways providing local access include Gladstone Street, Arrow Highway, and Cypress Street.

Access to the project site would be provided at two locations: one entrance off Vincent Avenue in the southeastern corner of the site, and another entrance off Vincent Avenue in the northeastern corner of the site. Each of these access points allow for emergency vehicle access. The site plan includes 199 standard parking stalls and 181 trailer stalls, which would be provided along the perimeter of the site.

The project area is served by Foothill Transit and Baldwin Park Transit. Foothill Transit Routes 185/272/492 and the Baldwin Park Teal Line provide transit service along parts of Live Oak Avenue, Baldwin Park Boulevard, Arrow Highway, and Irwindale Avenue. The nearest transit stop is Foothill Transit Route 492 located at the intersection of Vincent Avenue/Arrow Highway approximately 300 feet from the project site.

UTILITIES

The proposed project would connect to existing City infrastructure to provide water, sewer, and storm drainage utilities. Existing storm drain, sewer, water, and gas lines/pipes are currently located along Vincent Avenue and Allen Drive. Additionally, storm water facilities (i.e., storm drains and storm drain catch basins) currently exist at the existing industrial park area adjacent north of the site.

Wastewater: The Sanitation Districts of Los Angeles County provides all of Irwindale's sewer services. The great majority of the City is served by Sanitation District 22; with a small portion of its southwestern area served by District 15. It is anticipated that Sanitation District 22 will serve the proposed project. Wastewater for areas served by Sanitation District 22 is treated at the San Jose Creek Water Reclamation Plan (WRP). The District's trunk sewer lines extend throughout the City, with no under-served areas. The Los Angeles County Sewer Maintenance District, located in Alhambra, provides maintenance for the City's six miles of sewers on a contract basis, including emergency services on a 24-hour basis. The proposed project would connect to existing City infrastructure to provide sewer service. Existing sewer lines are currently located along Vincent Avenue and Allen Drive. The flow rates shown in the Sanitation Districts of Los Angeles County loadings table for District 22 were used. Assuming a flow rate of 25 gallons per day (gpd) per 1,000 sf, the project would generate a total wastewater flow of approximately 13,643 gpd. The design capacity of the San Jose Creek WRP is 100 million gallons per day (mgd). The WRP currently processes an average flow of 69.4 mgd. The total additional average wastewater flow increased by buildout of the project (13,643 gpd) would not exceed the design capacity of the San Jose Creek WRP.

Storm Drainage: The project site consists of two drainage sub-areas, 1A (12.83 acres) and 2A (12.62 acres), which roughly bisect the site. In order to meet the City of Irwindale and County of Los Angeles storm water quality requirements, biofiltration best management practices (BMPs) will be utilized to meet low impact development (LID)/storm water quality requirements. Planned biofiltration BMPs include Measure BIO-1 (biofiltration) of the County of Los Angeles Department of Public Works LID Standards Manual (February 2014).

Biofiltration systems use vegetation and soils or other filtration media to treat stormwater runoff. As stormwater runoff passes through the vegetation and the filtration media, the combined effects of filtration, adsorption, and biological uptake remove pollutants. In biofiltration systems, organic material in the soils retains water and promotes pollutant adsorption (i.e., dissolved metals, petroleum hydrocarbons) into the soil matrix. Plants use soil moisture, promote the drying of the soil through transpiration, and uptake pollutants in their roots and leaves. Plants with extensive root systems also help to maintain infiltration rates. Vegetation also decreases the velocity of flow and allows for particulates to settle. Biofiltration systems must be designed according to specifications outlined in the Biofiltration Fact Sheet (BIO-1) in Appendix E of the LID Standards Manual. Biofiltration systems with liners and underdrains will be located around the site perimeter, as well as proprietary high-flow devices that are approved for use by the County. An underground detention system will be required to mitigate peak flows, consistent with County requirements.

Any excess flow would be routed off-site via a 30-inch storm drain pipe prior to ultimately discharging to an existing 90-inch storm drain pipe which is owned and maintained by the Los Angeles County Flood Control District. The property owner will maintain the on-site drainage system, which would consist of catch basin, curb drains, and infiltration/detention system. The proposed storm drains and infiltration/detention system has been designed to convey the

required flow rates and will comply with the flood protection and storm water quality requirements of the City of Irwindale and County of Los Angeles.

Water: The City of Azusa Water Department, which owns the Azusa Light & Water (ALW), provides basic water service to the largest portion of Irwindale from its most northeasterly boundaries to Ornelas Street, including all of the Santa Fe Dam area located to the east of the San Gabriel River Freeway. ALW's water supply consists of imported water, groundwater, and surface water. ALW distributes water to its 23,000 service customers through a 281-mile network of distribution mains ranging from two to 30 inches in size. It is estimated that the proposed project would generate between 15 and 250 employees, which is estimated to require between 2,937 gallons per day (3.3 acre-feet per year [AFY]) and 48,950 gallons per day (approximately 54.9 AFY). According to the ALW's 2015 UWMP, ALW can expect to meet the needs of its customers through 2040. The existing water system has sufficient capacity to handle the water demand from the proposed project.

Solid Waste: The City of Irwindale has an exclusive franchise agreement with Athens Services to provide mixed waste collection services and other available programs to its residents and business community. During operation of the project, the warehouse uses would produce solid waste that would be collected and transferred to the landfill system. Using CalRecycle's manufacturing/warehouse use solid waste generation rate of 1.42 pounds per 100 sf per day, the project is expected to produce approximately 7,749 pounds per day (1,414 tons of solid waste annually).

The City of Irwindale is required to maintain a 50 percent diversion rate as mandated by the state via the California Integrated Waste Management Act for all solid waste. The project is subject to this diversion rate for solid waste generated by the project. The solid waste generated by the project would place a minimal burden on the City's required diversion rate. The increase would not require additional landfill capacity.

Natural Gas and Electricity: Electricity would be provided by Southern California Edison and natural gas will be provided by the Southern California Gas Company.

PUBLIC SERVICES

Fire Protection: Fire protection service would be provided by the Los Angeles County Fire Department (LACoFD). The City of Irwindale is served by two fire stations: Irwindale Station 48 (located at 15546 Arrow Highway in Irwindale) and Baldwin Park Station 29 (located at 14334 Los Angeles Street in Baldwin Park). Both of these stations are maintained by the LACoFD. The Irwindale Station is located 0.65 miles west of the project site.

Station 48 has a staff consisting of 16 full-time fire fighters. The station's equipment resources include one pumper, one reserve truck, and a paramedic unit. The average response time throughout the City is six minutes. Additional emergency resources are available from other California Division of Forestry (CDF) stations, the nearest being in Baldwin Park. The CDF equipment includes a snorkel truck and a triple pump. The City has an overall fire insurance rating 3 with the availability of alarm systems.

Funding for fire operations and services is derived from a combination of development impact fees, and a variety of annual taxes. The project applicant will pay development impact fees related to fire protection, and annual local taxes to fund fire protection services.

Police Protection: Police protection service would be provided by the Irwindale Police Department. The Irwindale Police Department consists of 28 full-time police officers, three reserve officers, and 12 civilian employees. Response times in most areas of the City are five minutes or less. A mutual aid contract with the Los Angeles County Sheriff's Department provides for special weapons teams when required, and other specialized equipment or services including homicide investigations. Air support services are provided through a contract with the Pasadena Police Department. Jail bookings are accomplished through a contract for services with the Glendora Police Department Jail Facility.

The City expands police protection service consistent with community needs and provides an adequate level of service based on demand. The project applicant will pay development impact fees related to police protection, and annual local taxes to fund police protection services.

GENERAL PLAN AND ZONING

The project site is designated as "Industrial/Business Park" and "Residential" by the City's General Plan Land Use Map (Figure 6) and is zoned as M-2 "Heavy Manufacturing" (Figure 7). As shown in Figure 6 and discussed above, the project applicant is requesting a General Plan Amendment to change the current designation from "Residential" to "Industrial/Business Park" for a 6.93-acre portion of APN 8417-034-016. The project site is also subject to the Irwindale Commercial & Industrial Design Guidelines.

ALTERNATIVES

CEQA requires that an EIR analyze a reasonable range of feasible alternatives that meet most or all project objectives while reducing or avoiding one or more significant environmental effects of the project. The range of alternatives required in an EIR is governed by a "rule of reason" that requires an EIR to set forth only those alternatives necessary to permit a reasoned choice (CEQA Guidelines Section 15126.6[f]). Where a potential alternative was examined but not chosen as one of the range of alternatives, the CEQA Guidelines require that the EIR briefly discuss the reasons the alternative was dismissed.

Alternatives that are evaluated in the EIR must be potentially feasible alternatives. However, not all possible alternatives need to be analyzed. An EIR must "set forth only those alternatives necessary to permit a reasoned choice." (CEQA Guidelines, Section 15126.6(f).) The CEQA Guidelines provide a definition for a "range of reasonable alternatives" and, thus limit the number and type of alternatives that need to be evaluated in an EIR. An EIR need not include any action alternatives inconsistent with the lead agency's fundamental underlying purpose in proposing a project. (In re Bay-Delta Programmatic Environmental Impact Report Coordinated Proceedings (2008) 43 Cal.4th 1143, 1166.)

First and foremost, alternatives in an EIR must be potentially feasible. In the context of CEQA, "feasible" is defined as:

> *… capable of being accomplished in a successful manner within a reasonable period of time, taking into account economic, environmental, legal, social and technological factors.* (CEQA Guidelines 15364)

The inclusion of an alternative in an EIR is not evidence that it is feasible as a matter of law, but rather reflects the judgment of lead agency staff that the alternative is potentially feasible. The final determination of feasibility will be made by the lead agency decision-making body through the adoption of CEQA Findings at the time of action on the Project. (Mira Mar Mobile Community

v. City of Oceanside (2004) 119 Cal.App.4th 477, 489 see also CEQA Guidelines, §§ 15091(a)) (3) (findings requirement, where alternatives can be rejected as infeasible); 15126.6 ([an EIR] must consider a reasonable range of potentially feasible alternatives that will foster informed decision making and public participation").) The following factors may be taken into consideration in the assessment of the feasibility of alternatives: site suitability, economic viability, availability of infrastructure, general plan consistency, other plan or regulatory limitations, jurisdictional boundaries, and the ability of the proponent to attain site control (Section 15126.6 (f) (1)).

Equally important to attaining the project objectives is the reduction of some or all significant impacts, particularly those that could not be mitigated to a less-than-significant level.

PROJECT GOALS AND OBJECTIVES

The principal objective of the proposed project is the approval and subsequent development of the 26.05-acre parcel for Industrial uses. The quantifiable objectives of the proposed project include the development of 26.05 acres with a 545,735 square-foot industrial warehouse building. The proposed project has developed the following objectives for the proposed project:

- Quantified Development: Development of land use densities and intensities at quantities that maximize the use of the land as a single development to meet the demands of the market while considering zoning and land uses restrictions. The quantifiable objectives include the development of approximately to 26.05 acres with a 545,735 square-foot industrial warehouse that provides employment-generating development.
- Economic Contribution: Strengthen the City's economic base through project's job creation; development related investment; disposable income from future employees; and increased property, sales, and transient occupancy taxes.
- Employment Opportunities: Provide for local and regional employment opportunities that take advantage of the areas high level of accessibility, allow for the expansion of the City's economic base, help create a jobs/housing balance, and reduce the commute for local residents.
- Public Facilities and Services: Provide infrastructure and services that meet City standards, integrate with existing and planned facilities and connections and do not diminish services to existing residents of the City.
- Marketable High Cube Warehouse: Provide for the construction of a high-cube warehouse facility that could attract a variety of end users, including transload facility, short-term storage facility, light industrial, and/or manufacturing uses. The facility should be designed with efficient transportation access and circulation within the site, accessible loading bays on two sides of the building, and a high level of on-site automation and logistics management to enable highly-efficient processing of goods through the high-cube warehouse.
- End User Restrictions: Restrict the use of the warehouse building such that no business would be able to operate a fulfillment center, parcel hub, or cold storage facility. The intent of this restriction is to minimize the potential air quality impacts from such end users.
- Buffer Surrounding Uses: Provide a landscaped buffer with sound attenuation along Vincent Avenue to buffer neighboring uses.
- Redevelopment of the Manning Pit: Complete the remediation, closure, and redevelopment of the Manning Pit in accordance with the General Plan, such that the site can be converted into a use that provides jobs and provides a tax base for the community.

ALTERNATIVES CONSIDERED

Alternatives to the proposed project were developed based on input from City staff and the project applicant. The alternatives developed include the following four alternatives:

- No Project (No Build) Alternative
- Maximum FAR Alternative
- Multiple Building Alternative

NO PROJECT (NO BUILD) ALTERNATIVE

The CEQA Guidelines (Section 15126.6[e]) require consideration of a no project alternative that represents the existing conditions, as well as what would reasonably be expected to occur in the foreseeable future if the project were not approved. For purposes of this analysis, the No Project (No Build) Alternative assumes that development of the project would not occur, and the project site would remain in its current undeveloped condition. It is noted that the No Project (No Build) Alternative would fail to meet the project objectives identified for the proposed project and is inconsistent with the goals of the General Plan for the development of the Manning Pit.

MULTIPLE BUILDING ALTERNATIVE

Under this alternative, the project site would be developed with three separate industrial warehouse buildings: Building 1 (121,397 sf with 111 parking stalls); Building 2 (121,373 sf with 91 parking stalls); and Building 3 (301,713 sf with 194 parking stalls). As shown in Figure 8, Buildings 1 and 2 would be located along Vincent Avenue (on the eastern half of the site), and Building 3 would be located on the western half of the site. Buildings 1 and 2 would each contain two 5,000 sf office areas, and Building 3 would contain four 5,000 sf office areas. Automobile parking among the three buildings would not be shared and would be dedicated to each building. However, the trailer parking for the trucks would be shared. It is noted that this alternative results in approximately the same total square footage as the proposed project.

The following table summarizes the building area, parking, and lot coverage for each of the three buildings proposed under the Multiple Building Alternative:

	Building Area (sf)			***Lot Coverage (FAR %)***
	Office	***Warehouse***	***Total***	
Building 1	10,000	111,397	121,397	43.88
Building 2	10,000	111,373	121,373	46.42
Building 3	20,000	281,713	301,713	51.30
Overall	*40,000*	*504,483*	*544,483*	*47.2 (average)*

MAXIMUM FAR ALTERNATIVE

Under this alternative, the project site would have the same footprint as the proposed project. This alternative assumes that the full 26.05 acres would be developed using this maximum floor-area-ratio (FAR) for the Industrial/Business Park designation (1.0). This alternative would result in a high cube warehouse that would total 1,134,738 square feet of industrial uses. This alternative would warrant a General Plan amendment for the 6.93 acres of residential land, because it would be a part of the development. The existing General Plan designation and zoning designation for the 6.93 acres would be reconciled through the General Plan amendment.

ALTERNATIVE CONSIDERED, BUT ELIMINATED

ALTERNATIVE LOCATION

CEQA Guidelines section 15126.6(f)(2) describes conditions under which consideration of alternative project location is appropriate. The key question to be considered is whether or not any of the significant effects of the project would be avoided or substantially lessened by putting the project in another location and whether the proposed project, placed at an alternative location, is environmentally superior to the proposed project. Only locations that would avoid or substantially lessen any of the significant effects of the project need be considered for inclusion in an EIR.

The City of Irwindale considered locations for development throughout the City. The City's key considerations in identifying an alternative location were as follows:

- Is there an alternative location where significant effects of the project would be avoided or substantially lessened?
- Is there a site available within the City's Sphere of Influence with the appropriate size and characteristics such that it would meet the basic project objectives?

The City has reviewed maps and planning documents in their consideration of alternative locations for the project. The City has not found an alternative location that exists within the City's Sphere of Influence with the appropriate size and characteristics that would meet the basic project objectives. An alternative location would also specifically conflict with the objective of "Redevelopment of the Manning Pit." As such, an alternative location is not feasible.

REDUCED LAND AREA PROJECT ALTERNATIVE

Under this alternative, the project site would be reduced by approximately 26.6 percent. This alternative assumes that the approximately 6.93 acres of land along the western boundary of the project site, which is currently designated Residential, would be removed from the development and would remain as undeveloped land. The balance of the parcel, the 19.12 acres of land making up the eastern portion of the project site, which is currently designated Industrial/Business Park, would be developed with a high cube warehouse building. This alternative would not warrant a General Plan amendment for the 6.93 acres of residential land, because it would not be a part of the development. The existing General Plan designation and zoning designation for the 6.93 acres would remain in conflict and would require reconciliation at some other time.

The City considered this alternative and found that the residual 6.93-acre parcel would be very difficult to develop by itself as either residential or industrial at some future time given its shape and size. The City found that there is a high likelihood that the 6.93 acres may end up being a residual undevelopable parcel, and that this alternative is in conflict with the project objectives which include strengthening the City's economic base through job creation, development related investment, increased property, sales, and transient occupancy taxes, and to generating local and regional employment opportunities." As such, the reduced land area alternative is not a feasible alternative.

REQUESTED ENTITLEMENTS AND OTHER APPROVALS

The City of Irwindale is the Lead Agency for the proposed project, pursuant to the State Guidelines for Implementation of CEQA, Section 15050.

This document will be used by the City of Irwindale to take the following actions:

- Adoption of the Environmental Impact Report (EIR);
- Adoption of the Mitigation Monitoring and Reporting Program (MMRP);
- Site Plan and Design Review (Discretionary Application) to approve the proposed site plan, which includes site configuration, design, location, and impact of the proposed use, and the compliance of the project with the established Zoning Code standard and the "City of Irwindale Commercial and Industrial Design Guidelines";
- General Plan Amendment to approve the change of the current General Plan designation from "Residential" to "Industrial/Business Park" for a portion of APN 8417-034-016; and
- Approval of the Lot Line Adjustment to combine APNs 8417-034-015 and 8417-034-016.

The following agencies may be required to issue permits or approve certain aspects of the proposed project:

- Regional Water Quality Control Board (RWQCB) – Construction activities would be required to be covered under the National Pollution Discharge Elimination System (NPDES);
- RWQCB – The Storm Water Pollution Prevention Plan (SWPPP) would be required to be approved prior to construction activities pursuant to the Clean Water Act;
- South Coast Air Quality Management District (SCAQMD) – Construction activities would be subject to the SCAQMD permits, codes, and requirements.

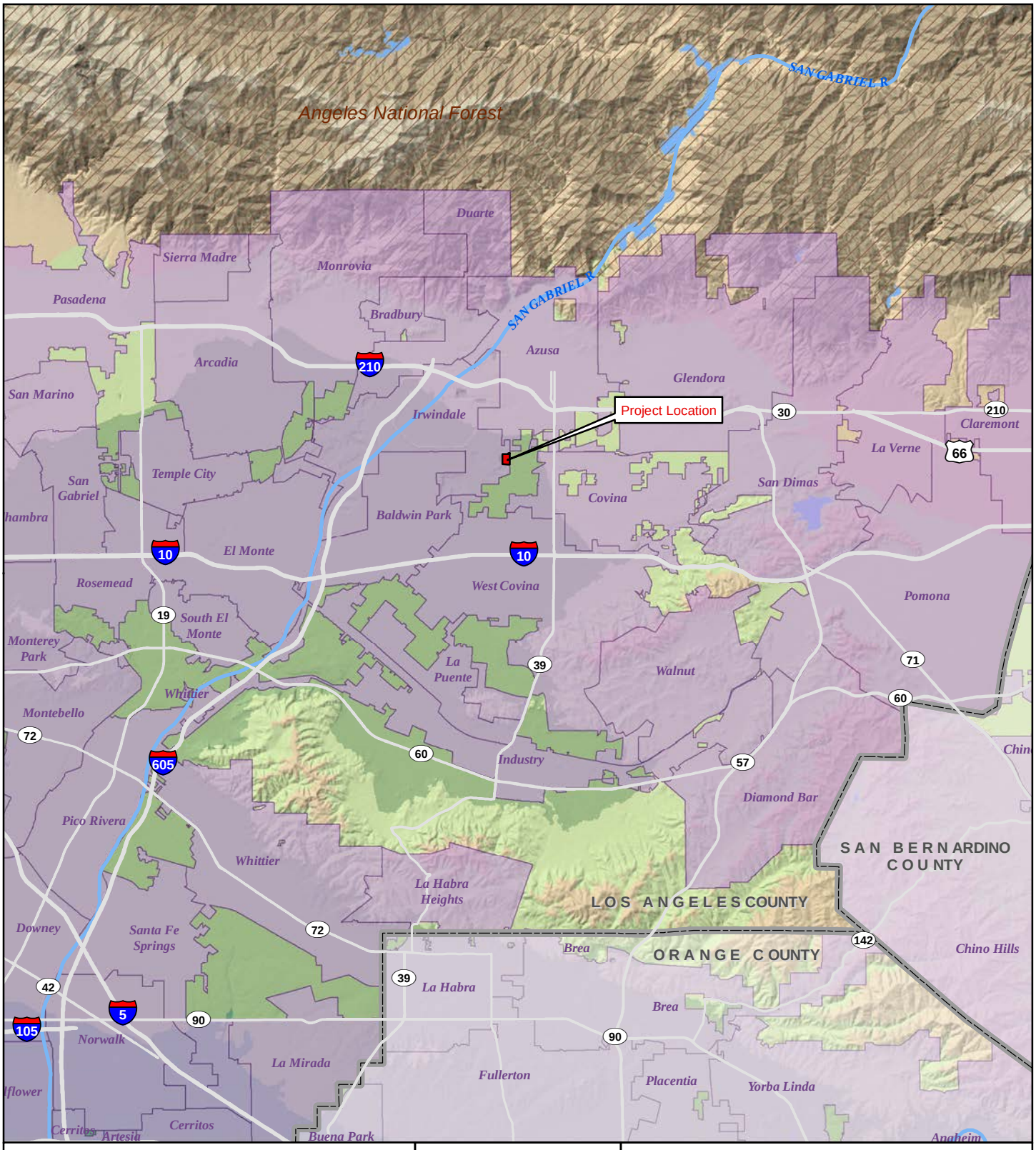

Legend

- Project Boundary
- City Areas
- County Boundary
- National Forest

Sources: CalAtlas; Los Angeles County; Orange County; San Bernardino County. Map date: May 14, 2018.

0 1 2
Miles

CITY OF IRWINDALE
5175 VINCENT AVENUE

Figure 1. Regional Location Map

De Novo Planning Group
A Land Use Planning, Design, and Environmental Firm

This page left intentionally blank.

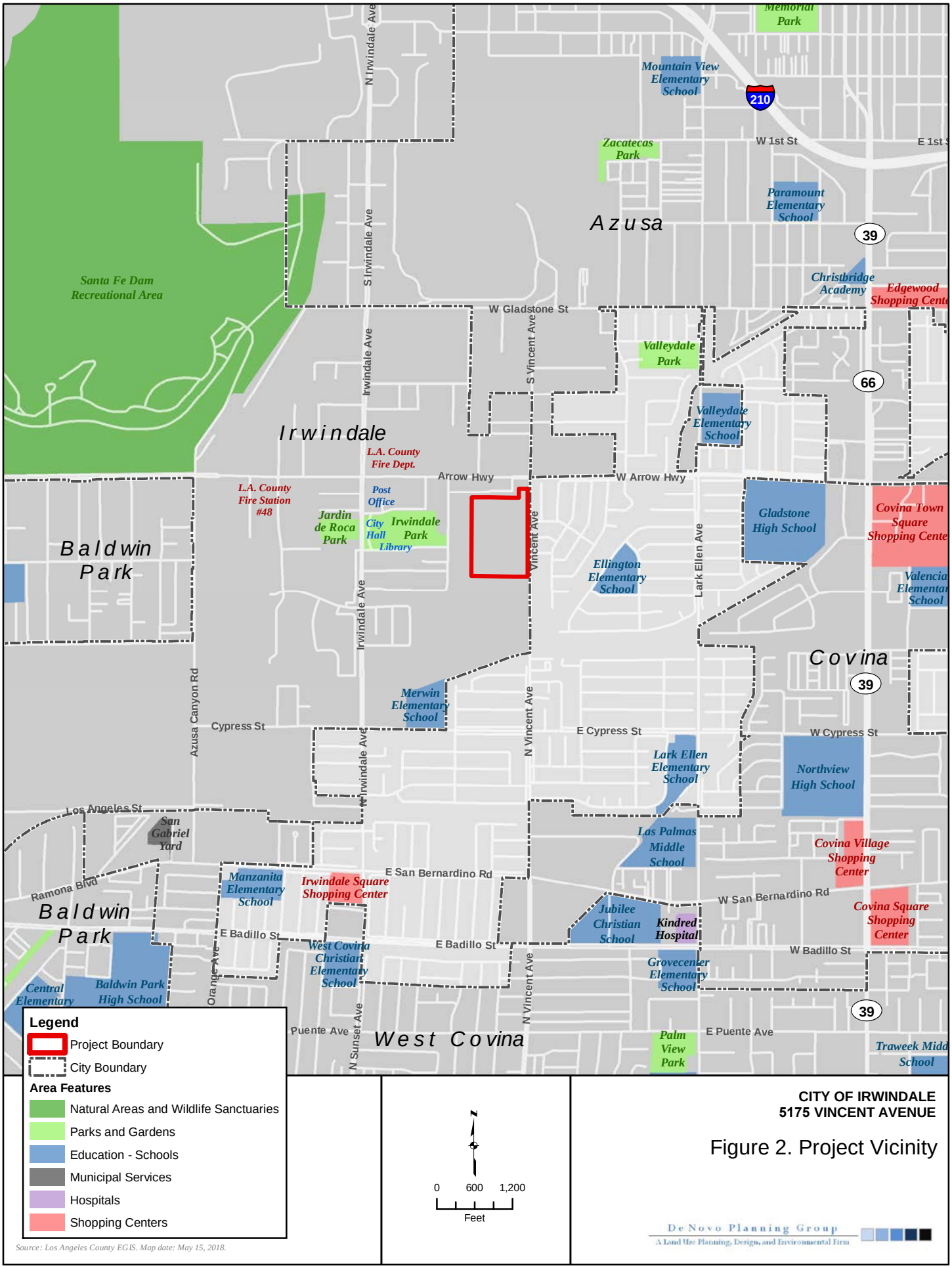

Source: Los Angeles County EGIS. Map date: May 15, 2018.

CITY OF IRWINDALE
5175 VINCENT AVENUE

Figure 2. Project Vicinity

De Novo Planning Group
A Land Use Planning, Design, and Environmental Firm

This page left intentionally blank.



Legend

Project Boundary

N

0 100 200

Feet

Source: Los Angeles County; ArcGIS Online World Imagery Map Service. Map date: May 14, 2018.

CITY OF IRWINDALE
5175 VINCENT AVENUE

Figure 3. Aerial View of Project Site

De Novo Planning Group
A Land Use Planning, Design, and Environmental Firm

This page left intentionally blank.

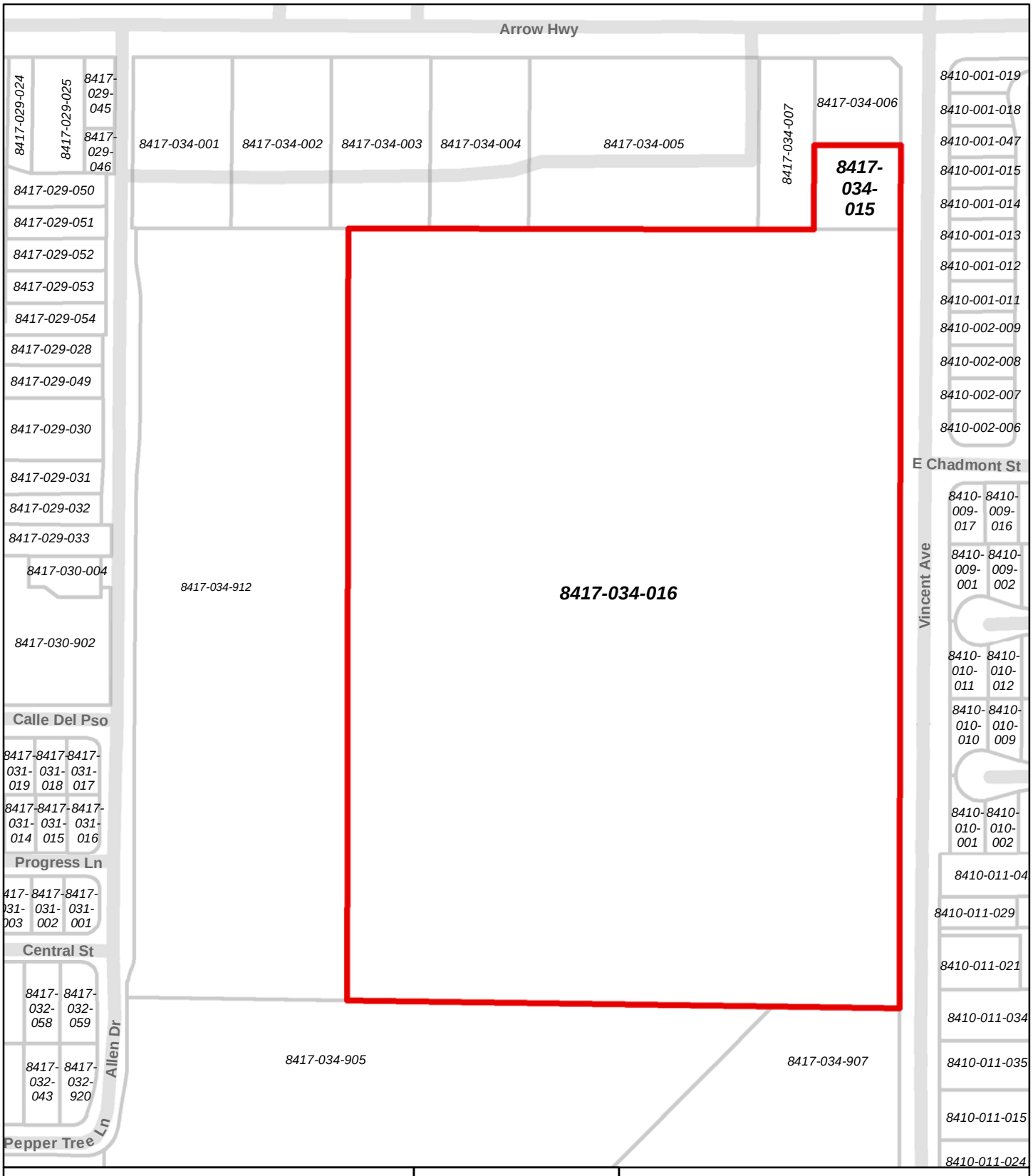

Legend

Project Boundary

Assessor Parcel Boundary

N

0 100 200

Feet

Source: Los Angeles County EGIS; Office of the Assessor, County of Los Angeles. Map date: May 14, 2018.

CITY OF IRWINDALE
5175 VINCENT AVENUE

Figure 4. Assessor's Parcel Map

De Novo Planning Group
A Land Use Planning, Design, and Environmental Firm

This page left intentionally blank.

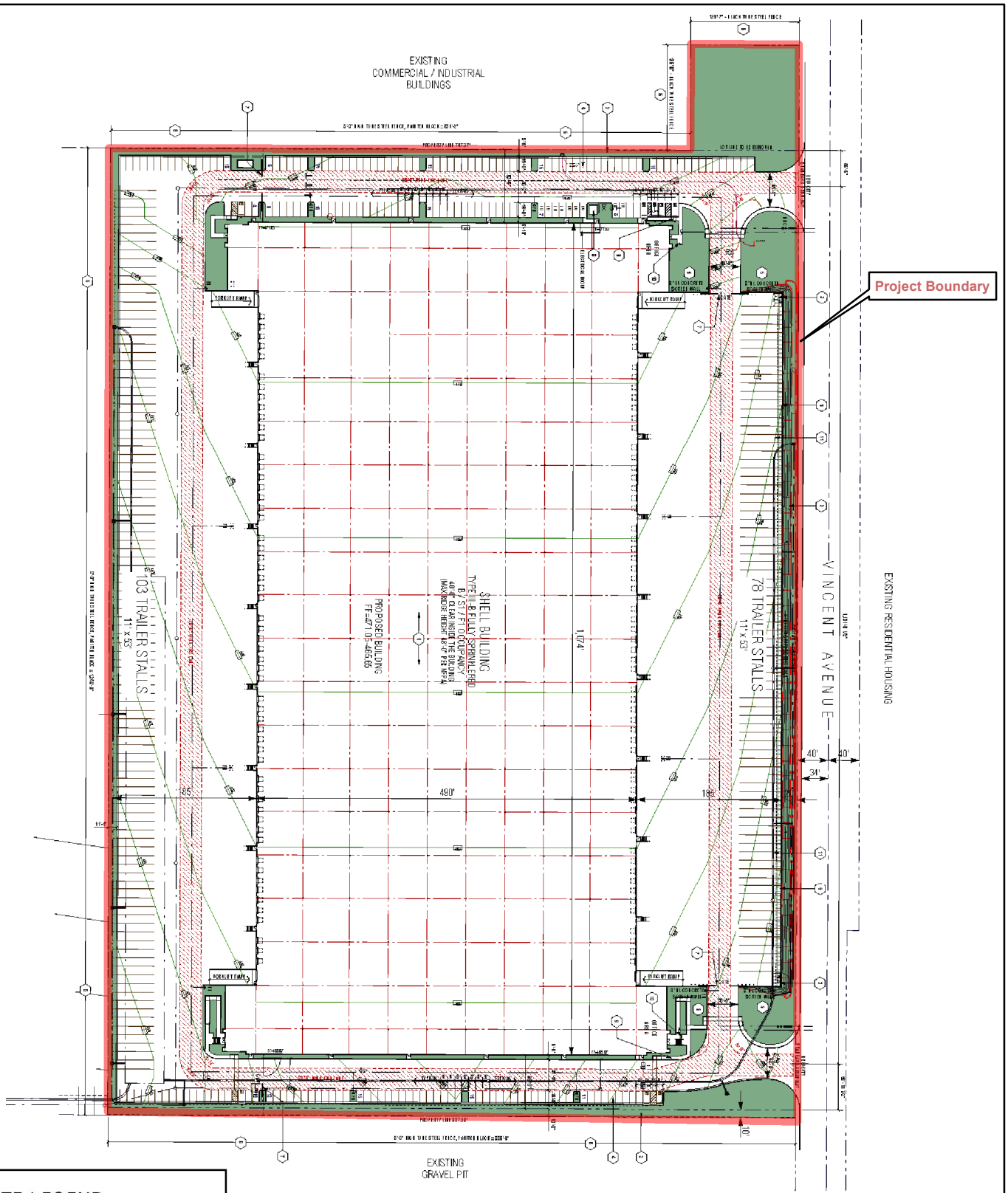

SITE LEGEND:

- ON-SITE LANDSCAPED AREA
- OFF-SITE LANDSCAPED AREA
- SITE PROPERTY LINES
- CITY CURB AND GUTTER
- LINES STREET CENTERLINES
- ON-SITE CURB LINES
- ON-SITE PARKING

N

0 50 100

Feet

CITY OF IRWINDALE
5175 VINCENT AVENUE

Figure 5. Site Plan

Source: RGA Office of Architectural Design, Site Plan-Warehouse Use. Map date: May 15, 2018.

De Novo Planning Group
A Land Use Planning, Design, and Environmental Firm

This page left intentionally blank.

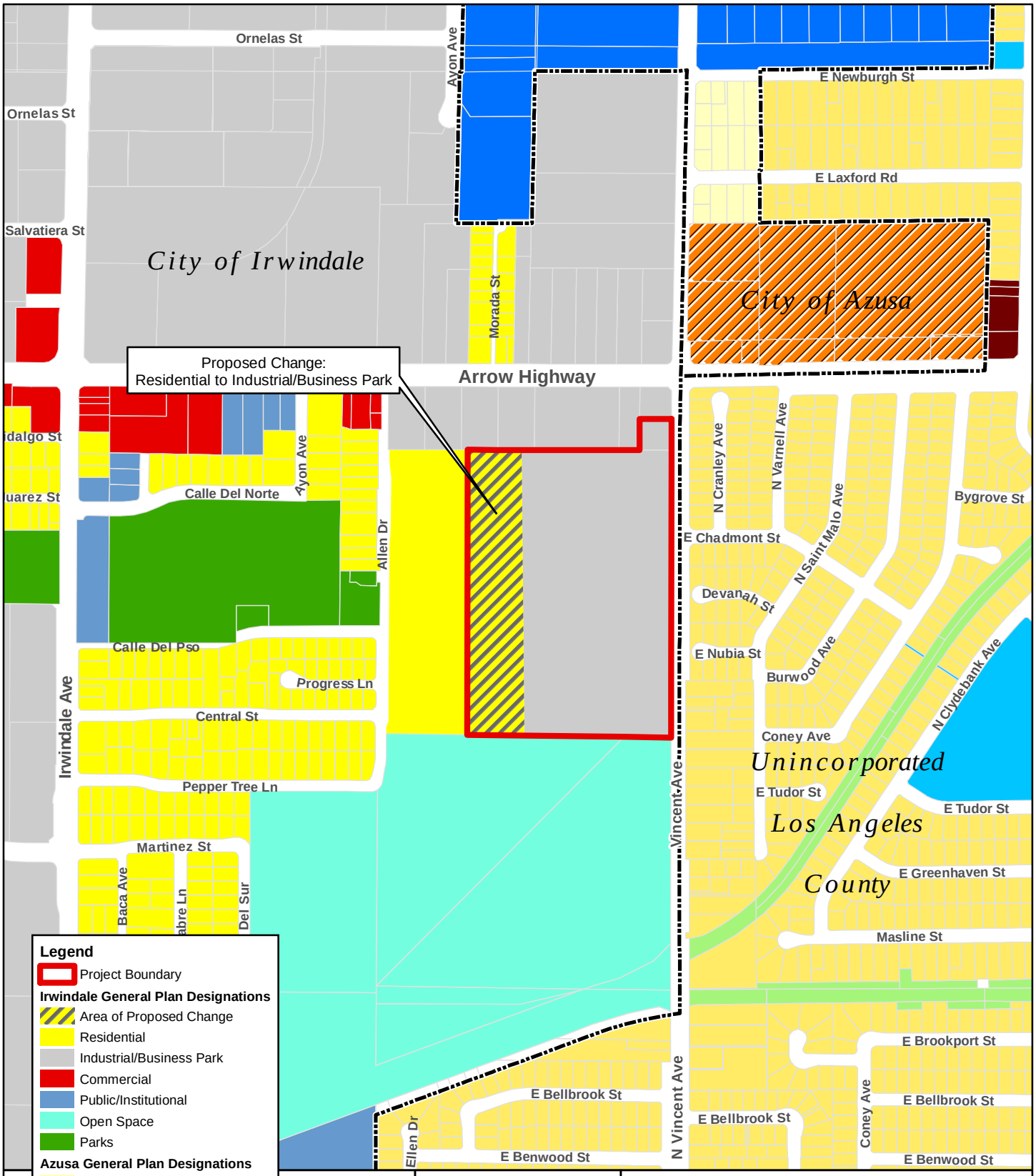

Source: Los Angeles County; Irwindale General Plan; Azusa General Plan. Date: 5/14/18.

CITY OF IRWINDALE
5175 VINCENT AVENUE

Figure 6.
Existing and Proposed General Plan Land Use Map

De Novo Planning Group
A Land Use Planning, Design, and Environmental Firm

This page left intentionally blank.

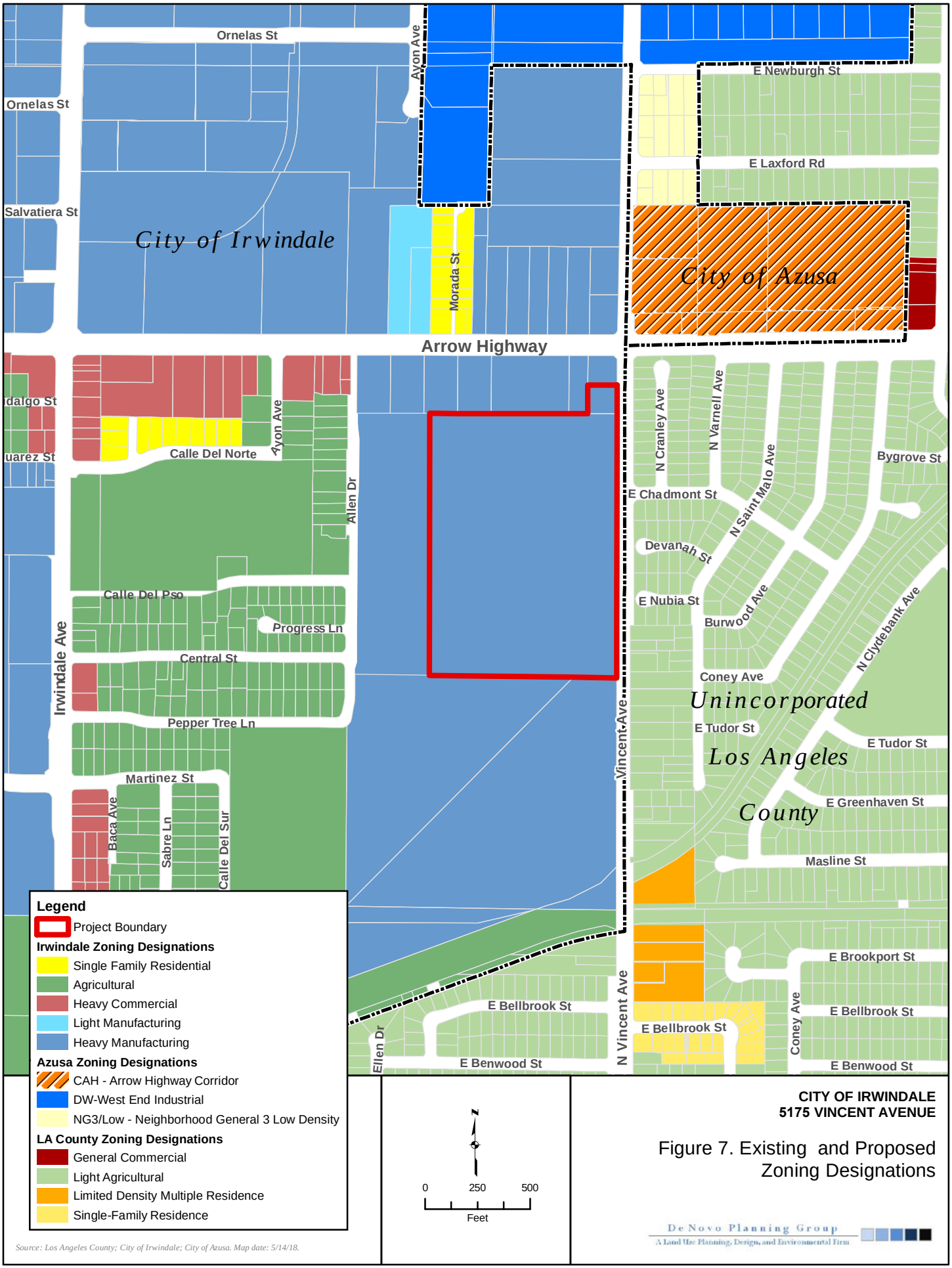

Source: Los Angeles County; City of Irwindale; City of Azusa. Map date: 5/14/18.

CITY OF IRWINDALE
5175 VINCENT AVENUE

Figure 7. Existing and Proposed Zoning Designations

De Novo Planning Group
A Land Use Planning, Design, and Environmental Firm

This page left intentionally blank.

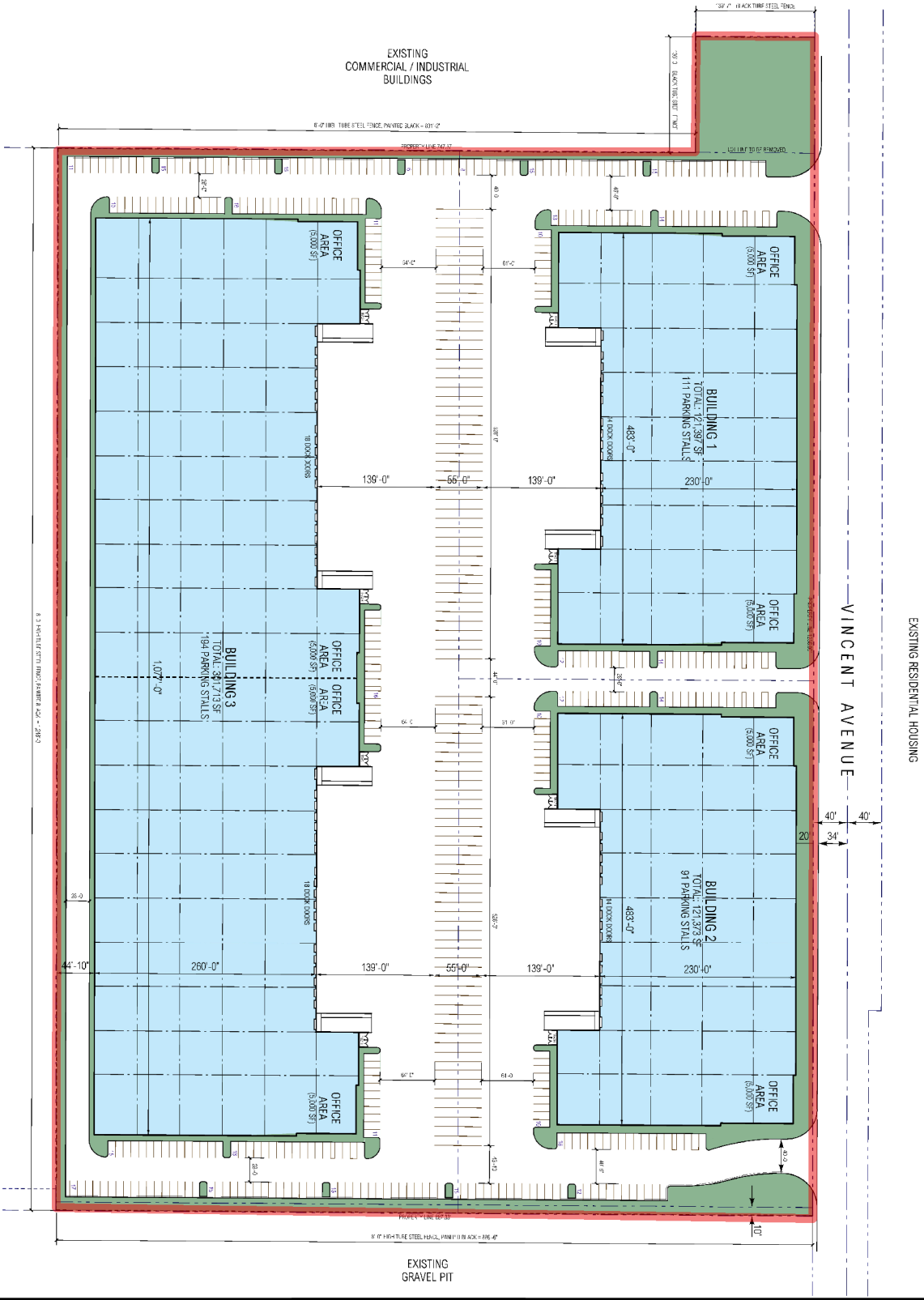

Legend

Project Boundary

N

0 50 100

Feet

CITY OF IRWINDALE
SWC VINCENT AVENUE AND ARROW HIGHWAY

Figure 8. Multiple Building Alternative

Source: RGA Office of Architectural Design, Site Plan, 12/10/19.
Map date: December 31, 2019.

De Novo Planning Group
A Land Use Planning, Design, and Environmental Firm

This page left intentionally blank.

ENVIRONMENTAL FACTORS POTENTIALLY AFFECTED

The environmental factors checked below would be potentially affected by this project, involving at least one impact that is a "Potentially Significant Impact" as indicated by the checklist on the following pages.

X	Aesthetics		Agriculture/Forestry Resources	X	Air Quality
	Biological Resources		Cultural Resources	X	Energy
X	Geology/Soils	X	Greenhouse Gas Emissions	X	Hazards/Hazardous Materials
X	Hydrology/Water Quality		Land Use/Planning		Mineral Resources
X	Noise		Population/Housing		Public Services
	Recreation	X	Transportation		Tribal Cultural Resources
	Utilities/Service Systems		Wildfire	X	Mandatory Findings of Significance

DETERMINATION

On the basis of this initial evaluation:

	I find that the proposed project COULD NOT have a significant effect on the environment, and a NEGATIVE DECLARATION will be prepared.
	I find that although the proposed project could have a significant effect on the environment, there will not be a significant effect in this case because revisions in the project have been made by or agreed to by the project proponent. A MITIGATED NEGATIVE DECLARATION will be prepared.
	I find that the proposed project MAY have a significant effect on the environment, and an ENVIRONMENTAL IMPACT REPORT is required.
X	I find that the proposed project MAY have a "potentially significant impact" or "potentially significant unless mitigated" impact on the environment, but at least one effect 1) has been adequately analyzed in an earlier document pursuant to applicable legal standards, and 2) has been addressed by mitigation measures based on the earlier analysis as described on attached sheets. An ENVIRONMENTAL IMPACT REPORT is required, but it must analyze only the effects that remain to be addressed.
	I find that although the proposed project could have a significant effect on the environment, because all potentially significant effects (a) have been analyzed adequately in an earlier EIR or NEGATIVE DECLARATION pursuant to applicable standards, and (b) have been avoided or mitigated pursuant to that earlier EIR or NEGATIVE DECLARATION, including revisions or mitigation measures that are imposed upon the proposed project, nothing further is required.

Signature Date

EVALUATION INSTRUCTIONS

1) A brief explanation is required for all answers except "No Impact" answers that are adequately supported by the information sources a lead agency cites in the parentheses following each question. A "No Impact" answer is adequately supported if the referenced information sources show that the impact simply does not apply to projects like the one involved (e.g., the project falls outside a fault rupture zone). A "No Impact" answer should be explained where it is based on project-specific factors as well as general standards (e.g., the project will not expose sensitive receptors to pollutants, based on a project-specific screening analysis).
2) All answers must take account of the whole action involved, including off-site as well as on-site, cumulative as well as project-level, indirect as well as direct, and construction as well as operational impacts.
3) Once the lead agency has determined that a particular physical impact may occur, then the checklist answers must indicate whether the impact is potentially significant, less than significant with mitigation, or less than significant. "Potentially Significant Impact" is appropriate if there is substantial evidence that an effect may be significant. If there are one or more "Potentially Significant Impact" entries when the determination is made, an EIR is required.
4) "Negative Declaration: Less Than Significant With Mitigation Incorporated" applies where the incorporation of mitigation measures has reduced an effect from "Potentially Significant Impact" to a "Less Than Significant Impact." The lead agency must describe the mitigation measures, and briefly explain how they reduce the effect to a less than significant level (mitigation measures from Section XVII, "Earlier Analyses," may be cross-referenced).
5) Earlier analyses may be used where, pursuant to the tiering, program EIR, or other CEQA process, an effect has been adequately analyzed in an earlier EIR or negative declaration. Section 15063(c)(3)(D). In this case, a brief discussion should identify the following:
    a) Earlier Analysis Used. Identify and state where they are available for review.
    b) Impacts Adequately Addressed. Identify which effects from the above checklist were within the scope of and adequately analyzed in an earlier document pursuant to applicable legal standards, and state whether such effects were addressed by mitigation measures based on the earlier analysis.
    c) Mitigation Measures. For effects that are "Less than Significant with Mitigation Measures Incorporated," describe the mitigation measures which were incorporated or refined from the earlier document and the extent to which they address site-specific conditions for the project.
6) Lead agencies are encouraged to incorporate into the checklist references to information sources for potential impacts (e.g., general plans, zoning ordinances). Reference to a previously prepared or outside document should, where appropriate, include a reference to the page or pages where the statement is substantiated.
7) Supporting Information Sources: A source list should be attached, and other sources used or individuals contacted should be cited in the discussion.

8) This is only a suggested form, and lead agencies are free to use different formats; however, lead agencies should normally address the questions from this checklist that are relevant to a project's environmental effects in whatever format is selected.
9) The explanation of each issue should identify:
   a) The significance criteria or threshold, if any, used to evaluate each question; and
   b) The mitigation measure identified, if any, to reduce the impact to less than significant.

EVALUATION OF ENVIRONMENTAL IMPACTS

In each area of potential impact listed in this section, there are one or more questions which assess the degree of potential environmental effect. A response is provided to each question using one of the four impact evaluation criteria described below. A discussion of the response is also included.

- Potentially Significant Impact. This response is appropriate when there is substantial evidence that an effect is significant. If there are one or more "Potentially Significant Impact" entries, upon completion of the Initial Study, an EIR is required.
- Less than Significant With Mitigation Incorporated. This response applies when the incorporation of mitigation measures has reduced an effect from "Potentially Significant Impact" to a "Less Than Significant Impact". The Lead Agency must describe the mitigation measures and briefly explain how they reduce the effect to a less than significant level.
- Less than Significant Impact. A less than significant impact is one which is deemed to have little or no adverse effect on the environment. Mitigation measures are, therefore, not necessary, although they may be recommended to further reduce a minor impact.
- No Impact. These issues were either identified as having no impact on the environment, or they are not relevant to the project.

ENVIRONMENTAL CHECKLIST

This section of the Initial Study incorporates the most current Appendix "G" Environmental Checklist Form contained in the CEQA Guidelines. Impact questions and responses are included in both tabular and narrative formats for each of the 21 environmental topic areas.

I. AESTHETICS

Except as provided in Public Resources Code Section 21099, would the project:	***Potentially Significant Impact***	***Less Than Significant with Mitigation Incorporation***	***Less Than Significant Impact***	***No Impact***
a) Have a substantial adverse effect on a scenic vista?	X			
b) Substantially damage scenic resources, including, but not limited to, trees, rock outcroppings, and historic buildings within a state scenic highway?				X
c) In non-urbanized areas, substantially degrade the existing visual character or quality of public views of the site and its surroundings? (Public views are those that are experienced from publicly accessible vantage point). If the project is in an urbanized area, would the project conflict with the applicable zoning and other regulations governing scenic quality?	X			
d) Create a new source of substantial light or glare which would adversely affect day or nighttime views in the area?	X			

Responses to Checklist Questions

Responses a, c-d) The proposed project includes development of a 545,735 sf industrial warehouse building, which would alter the existing condition of the former mining pit and introduce new sources of light and glare to the site. The project site is located in an urbanized area. According to the City's General Plan, there are no scenic vistas within the project area. The San Gabriel Mountains, located to the north of the project site, is an important part of the local scenery. Additionally, existing views in this urban and developed area are limited. Nevertheless, based on concerns raised by public comment, it has been determined that the potential impacts on aesthetics caused by the proposed project will require a detailed analysis in the EIR. Consequently, the lead agency will examine three of the environmental issues listed in the checklist above (a, c, and d) in the EIR and will decide whether the proposed project has the potential to have a significant impact on aesthetics. At this point, a definitive impact conclusion for each of these environmental topics will not be made. Rather, all are considered ***potentially significant*** until a detailed analysis is prepared in the EIR.

The EIR will include a visual analysis that presents the methodology, thresholds of significance, a consistency analysis, a cumulative impact analysis, and a discussion of feasible mitigation measures that should be implemented to reduce any potential impacts on aesthetics. The analysis will look at foreground, middleground, and background views from public vantage points along the perimeter of the project site. The analysis will include visual simulations of the proposed building and the Multiple Building Alternative, photographs from public vantage points,

architectural elevations of the buildings, an evaluation of the building materials for reflective values/glare, lighting and the potential for light pollution offsite, and visual simulations from the public view. We will compare the proposed project to applicable zoning and other regulations related to scenic qualities.

Response b): The project site is not located within view of a state scenic highway. The nearest highway subject to this program is State Route (SR) 2, an Officially Designated State Scenic Highway, located approximately 4.0 miles north of the project site. Therefore, the proposed project would not substantially damage scenic resources, including, but not limited to, trees, rock outcroppings, and historic buildings within a state scenic highway. Implementation of the proposed project would have ***no impact*** relative to this topic. This topic does not warrant additional analysis and will not be addressed further in the EIR.

II. AGRICULTURE AND FORESTRY RESOURCES

Would the project:	***Potentially Significant Impact***	***Less Than Significant with Mitigation Incorporation***	***Less Than Significant Impact***	***No Impact***
a) Convert Prime Farmland, Unique Farmland, or Farmland of Statewide Importance (Farmland), as shown on the maps prepared pursuant to the Farmland Mapping and Monitoring Program of the California Resources Agency, to non-agricultural use?				X
b) Conflict with existing zoning for agricultural use, or a Williamson Act contract?				X
c) Conflict with existing zoning for, or cause rezoning of, forest land (as defined in Public Resources Code section 1222(g)) or timberland (as defined in Public Resources Code section 4526)?				X
d) Result in the loss of forest land or conversion of forest land to non-forest use?				X
e) Involve other changes in the existing environment which, due to their location or nature, could result in conversion of Farmland, to non-agricultural use or conversion of forest land to non-forest use?				X

Responses to Checklist Questions

Response a): The project site is not designated Prime Farmland, Unique Farmland, or Farmland of Statewide Importance. The project site does not contain prime farmland, unique farmland, or farmland of statewide importance as shown on the maps prepared pursuant to the Farmland Mapping and Monitoring Program of the California Resources Agency. The proposed project would result in the conversion of undeveloped land which contains a former mine pit to non-agricultural use. Implementation of the proposed project would have ***no impact*** relative to this issue. This topic does not warrant additional analysis and will not be addressed further in the EIR.

Response b): The project site is not zoned for agricultural use nor is it under a Williamson Act contract. The proposed project would not conflict with existing zoning for agricultural use, or a Williamson Act contract. Implementation of the proposed project would have ***no impact*** relative to this issue. This topic does not warrant additional analysis and will not be addressed further in the EIR.

Response c): The project site is not forest land (as defined in Public Resources Code section 1222(g)) or timberland (as defined in Public Resources Code section 4526). The proposed project would not conflict with existing zoning for, or cause rezoning of, forest land or timberland. Implementation of the proposed project would have ***no impact*** relative to this issue. This topic does not warrant additional analysis and will not be addressed further in the EIR.

Response d): The project site is not forest land. The proposed project would not result in the loss of forest land or conversion of forest land to non-forest use. Implementation of the proposed project would have ***no impact*** relative to this issue. This topic does not warrant additional analysis and will not be addressed further in the EIR.

Response e): The project site does not contain agricultural land or forest land. The project site totals approximately 26.05 acres and is comprised of two vacant parcels; one of which is an undeveloped, recently filled, former aggregate mine pit (commonly known as the Manning Pit). None of the land within the City of Irwindale is designated Prime Farmland, Unique Farmland, or Farmland of Statewide Importance. The lands adjacent to the site contain residential and industrial uses. The proposed project does not involve changes in the existing environment which, due to their location or nature, could result in conversion of Farmland, to non-agricultural use, or conversion of forest land to non-forest use. Implementation of the proposed project would have ***no impact*** relative to this issue. This topic does not warrant additional analysis and will not be addressed further in the EIR.

III. AIR QUALITY

Would the project:	*Potentially Significant Impact*	*Less Than Significant with Mitigation Incorporation*	*Less Than Significant Impact*	*No Impact*
a) Conflict with or obstruct implementation of the applicable air quality plan?	X			
b) Result in a cumulatively considerable net increase of any criteria pollutant for which the project region is non-attainment under an applicable federal or state ambient air quality standard?	X			
c) Expose sensitive receptors to substantial pollutant concentrations?	X			
d) Result in other emissions (such as those leading to odors) adversely affecting a substantial number of people?	X			

Responses to Checklist Questions

Responses a-d): Based on air quality concerns raised by public comment, it has been determined that the potential impacts on air quality caused by the proposed project will require a detailed analysis in the EIR. Consequently, the lead agency will examine each of the four environmental issues listed in the checklist above in the EIR and will decide whether the proposed project has the potential to have a significant impact on air quality. At this point, a definitive impact conclusion for each of these environmental topics will not be made. Rather, all are considered ***potentially significant*** until a detailed analysis is prepared in the EIR.

The EIR will include an air quality analysis that presents the methodology, thresholds of significance, a consistency analysis, a cumulative impact analysis, and a discussion of feasible mitigation measures that should be implemented to reduce any potential impacts on air quality. The project may result in toxic air contaminants, short-term construction-related emissions, and long-term operational emissions, primarily attributable to emissions from vehicle trips and from energy consumption by the commercial uses. The proposed project is located within the Southern California Air Basin (SoCAB), which is under the jurisdiction of the South Coast Air Quality Management District (SCAQMD). We will consult with the SCAQMD regarding the project's potential to cause impacts, and the applicability of the SCAQMD's Rules and Regulations. We will also consult with the California Air Resources Board (CARB). The air quality analysis will include the following:

- A description of regional and local air quality as well meteorological conditions that could affect air pollutant dispersal or transport in the vicinity of the project site. Applicable air quality regulatory framework, standards, and significance thresholds will be discussed.
- An analysis of the proposed project's potential to conflict with or obstruct implementation of SCAQMD's 2016 Air Quality Management Plan (AQMP), and any other applicable air quality plans.
- An analysis of the SCAQMD Rules and Regulations that are applicable to the proposed project.
- Short-term (i.e., construction) increases in regional criteria air pollutants will be quantitatively assessed. The latest version of the CARB-approved California Emissions Estimator Model (CalEEMod) computer model will be used to estimate regional mobile

source and particulate matter emissions associated with the construction of the proposed project.

- Long-term (operational) increases in regional criteria air pollutants will be quantitatively assessed for area source, mobile sources, and stationary sources. The CARB-approved CalEEMod computer model will be used to estimate emissions associated with the proposed project. Modeling will be provided for the worst-case proposed project land use scenario.
- Exposure to odorous or toxic air contaminants during the project's operational phase will be assessed through an air toxics health risk assessment, utilizing AERMOD and HARP-2 risk modeling software, following guidance as provided by the SCAQMD and the CARB. Incremental cancer risk for residents and workers, and chronic and acute hazards will be assessed.
- Localized Significance Thresholds (LST) analysis will be conducted to determine the localized air quality impacts during construction, following SCAQMD guidance. The most recent LST lookup tables provided by the SCAQMD will be utilized for this analysis.
- Local mobile-source (carbon monoxide) (CO) concentrations will be assessed through a CO screening method as recommended by the SCAQMD. If the screening method indicates that modeling is necessary, upon review of the traffic analysis, CO concentrations will be modeled using the California Department of Transportation (Caltrans)-approved CALINE4 computer model.
- The potential for the proposed project to generate objectionable odors on neighboring sensitive receptors will be assessed qualitatively following CARB recommendations.

IV. BIOLOGICAL RESOURCES

Would the project:	*Potentially Significant Impact*	*Less Than Significant with Mitigation Incorporation*	*Less Than Significant Impact*	*No Impact*
a) Have a substantial adverse effect, either directly or through habitat modifications, on any species identified as a candidate, sensitive, or special status species in local or regional plans, policies, or regulations, or by the California Department of Fish and Game or U.S. Fish and Wildlife Service?		X		
b) Have a substantial adverse effect on any riparian habitat or other sensitive natural community identified in local or regional plans, policies, regulations or by the California Department of Fish and Game or US Fish and Wildlife Service?				X
c) Have a substantial adverse effect on state or federally protected wetlands (including, but not limited to, marsh, vernal pool, coastal, etc.) through direct removal, filling, hydrological interruption, or other means?				X
d) Interfere substantially with the movement of any native resident or migratory fish or wildlife species or with established native resident or migratory wildlife corridors, or impede the use of native wildlife nursery sites?			X	
e) Conflict with any local policies or ordinances protecting biological resources, such as a tree preservation policy or ordinance?				X
f) Conflict with the provisions of an adopted Habitat Conservation Plan, Natural Community Conservation Plan, or other approved local, regional, or state habitat conservation plan?				X

Responses to Checklist Questions

Response a):

Special Status Plants

A records search revealed that there are 36 special status plant species (federal/state listed, and/or CNPS List 1B or 2) documented within the nine-quadrangle region search of the project site. The nine-quadrangle region includes the following U.S. Geological Survey (USGS) quadrangles: Mt. Wilson, Azusa, Glendora, El Monte, Baldwin Park, San Dimas, Whittier, La Habra, and Yorba Linda. The records search was generated from the CNDDB, USFWS IPAC report, and CNPS inventory (2018). The 36 special status plant species documented within the nine-quadrangle region search for the project site include the following:

- San Gabriel manzanita
- Braunton's milk-vetch
- Parish's brittlescale
- Nevin's barberry
- thread-leaved brodiaea

- slender mariposa-lily
- Plummer's mariposa-lily
- intermediate mariposa-lily
- lucky morning-glory
- southern tarplant
- Parry's spineflower
- California saw-grass
- Peruvian dodder
- slender-horned spineflower
- San Gabriel River dudleya
- San Gabriel Mountains dudleya
- many-stemmed dudleya
- hot springs fimbristylis
- San Gabriel bedstraw
- mesa horkelia
- California satintail
- Coulter's goldfields
- Robinson's pepper-grass
- San Gabriel linanthus
- California muhly
- prostrate vernal pool navarretia
- California Orcutt grass
- Rock Creek broomrape
- Brand's star phacelia
- white rabbit-tobacco
- Parish's gooseberry
- southern mountains skullcap
- chaparral ragwort
- San Bernardino aster
- Greata's aster
- Sonoran maiden fern

The project site has been highly disturbed over the last approximately 90 years. The project site is the general location of the former Irwindale Pit No. 1 (Manning Brothers Pit) Project, which proposed reclamation of the historic mining pit. Mining of the Manning Pit began in the 1930s and was completed in the 1970s. After acquisition of the pit by the City of Irwindale in the late 1980s, the City began backfilling the site with a variety of construction debris. At the end of 2017, approximately 4.45 million cubic yards of material has been imported to fill both the site and construct the southern boundary slope. Approximately 590,000 cubic yards of material is needed to complete both the grading operations and the construction of the southern boundary slope. The backfilling project is anticipated to be completed in the summer or fall of 2018.

The project site is devoid of sensitive habitat and does not contain any special status plants that are documented in the region. Therefore, the proposed project would have a ***less than significant*** impacts on special-status plants.

Special Status Animals

A records search reveals that there are 44 special status animal species (federal/state listed) within the nine-quadrangle region search of the project site. Of the 44 species, 19 are bird species,

12 are amphibian or reptile species, 10 are mammal species, and three are fish species. The records search came from the CNDDB, and USFWS IPAC report (2018). The 44 special status animal species documented within the nine-quadrangle region search for the project site include the following:

- Cooper's hawk
- tricolored blackbird
- southern California rufous-crowned sparrow
- grasshopper sparrow
- arroyo toad
- pallid bat
- California glossy snake
- long-eared owl
- coastal whiptail
- burrowing owl
- Swainson's hawk
- coastal cactus wren
- Santa Ana sucker
- western yellow-billed cuckoo
- Townsend's big-eared bat
- red-diamond rattlesnake
- black swift
- southwestern willow flycatcher
- western pond turtle
- large-blotched salamander
- California horned lark
- western mastiff bat
- merlin
- arroyo chub
- yellow-breasted chat
- western red bat
- western yellow bat
- California black rail
- San Diego black-tailed jackrabbit
- pocketed free-tailed bat
- big free-tailed bat
- desert bighorn sheep
- coast horned lizard
- coastal California gnatcatcher
- southern mountain yellow-legged frog
- Santa Ana speckled dace
- bank swallow
- coast patch-nosed snake
- yellow warbler
- western spadefoot
- Coast Range newt
- American badger
- two-striped gartersnake

- least Bell's vireo

The highly disturbed project site does not contain suitable habitat for special status animal species. For example, because the site does not contain aquatic habitat, the species which require streams, wetlands, vernal pools, or similar water features would not be found on the project site. Additionally, because the project site does not contain grassland habitat, foraging habitat for special status bird species is not present.

Due to the past use of the site, the majority of the project site does not contain any trees. However, some landscape trees are located along the perimeter of the project site. While none of the special-status bird species have been documented on the project site, each nesting cycle (year) brings new potential for nesting. Any delay in construction into a future year would present a new potential for impacts to nesting birds. Implementation of the following mitigation measure would ensure that the project site is evaluated prior to the commencement of construction if it were to occur during the nesting season. Additionally, the following mitigation measure provides certain protections for nesting birds if they were found during the preconstruction survey. Given the absence of observations of, or appropriate habitat for, special status animals, impacts on special-status animals as a result of the proposed project would be ***less than significant with mitigation***.

> ***Mitigation Measure Bio-1:*** *Prior to any permit issuance for grubbing, grading, tree trimming/removal or prior to engaging in such activities that would occur between the breeding season for native birds (February 15 through July 31), the project applicant shall retain the services of a qualified ornithologist to conduct an ornithological survey of the construction zone. The City will require the developer to submit a copy of the executed contract for such services prior to the issuance of any grading permits. The ornithological survey shall occur not more than seven days prior to the initiation of those grading/construction activities. If the ornithologist detects any occupied nests of native birds within the construction zone or in close proximity to, they shall be mapped on construction plans and the project applicant will fence off the area(s) supporting bird nests with temporary construction fencing, providing a minimum buffer of 200 feet between the nest and limits of construction. (This buffer zone shall be at least 500 feet for raptors until the young have fledged, are no longer being fed by the parents, have left the nest, and will no longer be impacted by the project.) The construction crew will be instructed to avoid any activities in the zone until the bird nest(s) is/are no longer occupied, per a subsequent survey by the qualified ornithologist. Alternatively, the project applicant will consult as appropriate with the USFWS to discuss the potential loss of nests of native birds covered by the MBTA to obtain the appropriate permit from the USFWS.*

Indirect Effects on Special Status Species

Construction activities have a potential to result in indirect effects either to habitat or species occupying areas outside the project site. Indirect effects involve the potentially harmful effects associated with noise generated by construction equipment and dust created by the grading and site alteration activities.

Given the distance from the project site to the nearest habitat area, noise and dust generated by construction activities would not result in any significant indirect effects on special status species located in the revegetation area. Construction activities would be subject to measures that are intended to minimize noise and dust impacts (i.e. construction equipment fitted with mufflers, dust control measures such as regular watering during grading). As a result, no significant indirect impacts to special status species will occur. A SWPPP will be implemented during construction to ensure that there are no indirect impacts to water bodies from storm water runoff. This would, in effect, minimize any potential indirect effect on aquatic special status species located off-site. Therefore, the proposed project would have a ***less than significant***

indirect impact on special-status species. This topic does not warrant additional analysis and will not be addressed further in the EIR.

Responses b-c): Riparian habitat is found in the interface between land and a river or stream. This habitat is significant in ecology, environmental management, and civil engineering because of their role in soil conservation, their habitat biodiversity, and the influence they have on fauna and aquatic ecosystems, including grassland, woodland, wetland or even non-vegetative.

Sensitive natural communities are those that are considered rare in the region, support special-status plant or wildlife species, or receive regulatory protection (i.e., §404 and 401 of the Clean Water Act, the CDFG §1600 et seq. of the California Fish and Game Code, and/or the Porter-Cologne Act). In addition, the California Natural Diversity Data Base (CNDDB) has designated a number of communities as rare; these communities are given the highest inventory priority (Holland 1986, CDFG 2003e). There were nine communities documented within the CNDDB nine quadrangle search. These included: California Walnut Woodland. Canyon Live Oak Ravine Forest. Open Engelmann Oak Woodland. Riversidian Alluvial Fan Sage Scrub. Southern California Arroyo Chub/Santa Ana Sucker Stream. Southern Coast Live Oak Riparian Forest. Southern Sycamore Alder Riparian Woodland. Southern Willow Scrub. Walnut Forest. None of these habitat types are located within the project site.

The project site does not support any riparian habitat or sensitive natural communities. Sensitive natural communities are not located on the project site. Therefore, implementation of the proposed project would have a ***no impact*** relative to this issue. These topics do not warrant additional analysis and will not be addressed further in the EIR.

Response d): The project site is currently undeveloped and does not serve as a wildlife corridor, or nursery site. Movement of wildlife through the project site is currently limited by existing development and roadways. For example, an existing property located to the south of the site is a flood control and recharge basin, which is also currently used as a silt deposit, and residential and industrial uses are located to the north, east, and west of the project site. The proposed project would not interfere substantially with the movement of any native resident or migratory fish or wildlife species or with established native resident or migratory wildlife corridors, or impede the use of native wildlife nursery sites. Implementation of the proposed project would result in a ***less than significant*** impact relative to this topic. This topic does not warrant additional analysis and will not be addressed further in the EIR.

Response e): The project would not conflict with any local policies or ordinances protecting biological resources. The City's General Plan includes several resources management element policies, the majority of which do not apply to the project due to the existing and past site conditions of the site. The project would be potentially inconsistent with the mining and reclamation issue area policies as they relate to biological resources based on impacts identified in Mitigation Measure Bio-1.

With implementation of Mitigation Measure Bio-1, any potential conflict to resource preservation issue area policies and the mining and reclamation issue area polices would be fully mitigated. Therefore, implementation of the proposed project would have ***no impact*** relative to this issue. This topic does not warrant additional analysis and will not be addressed further in the EIR.

Response f): The project site is not located within an adopted Habitat Conservation Plan, Natural Community Conservation Plan, or other approved local, regional, or state habitat conservation plan. Therefore, implementation of the proposed project would have ***no impact*** relative to this

issue. This topic does not warrant additional analysis and will not be addressed further in the EIR.

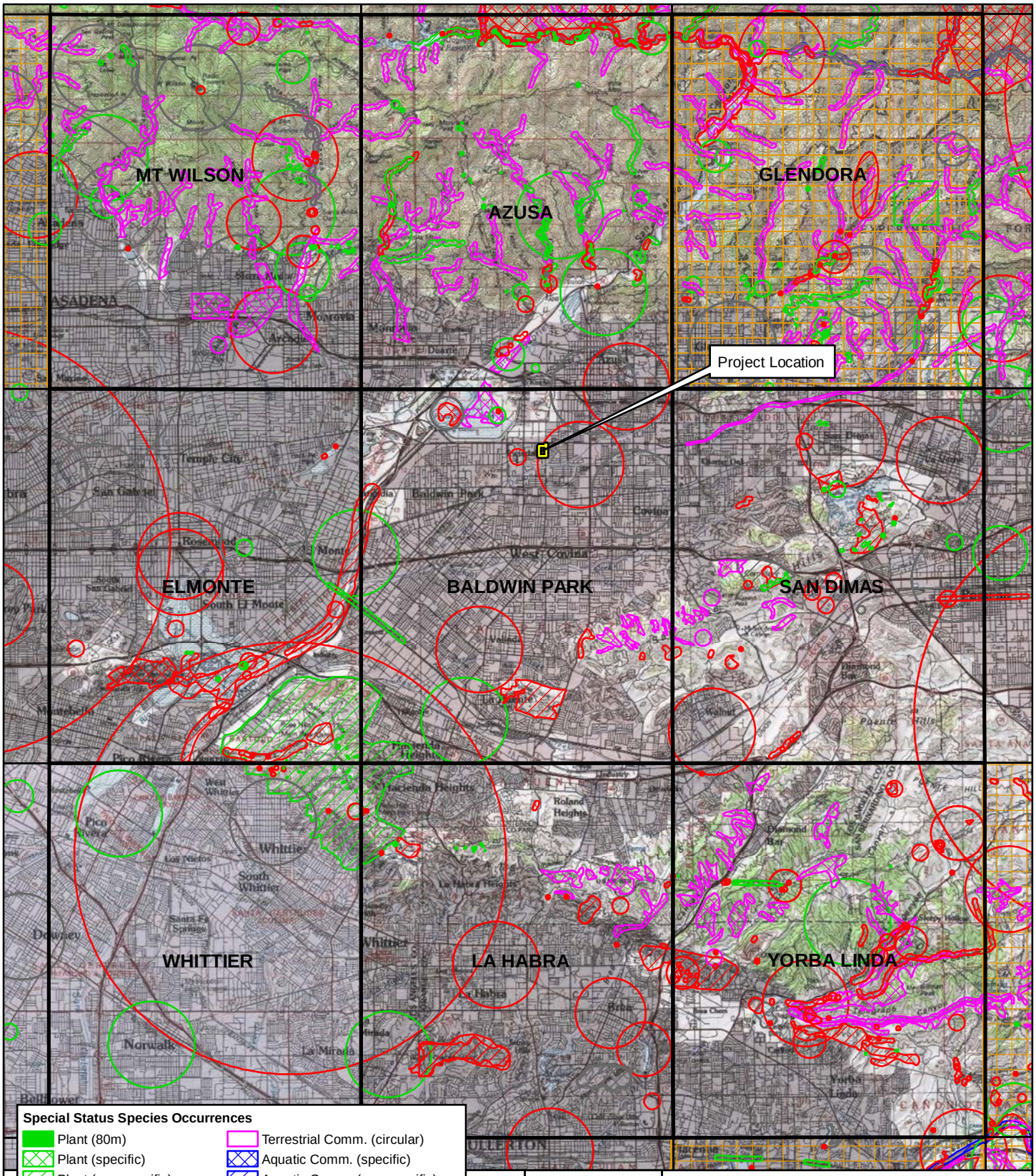

CNDDB version 05/2018. Please Note: the occurrences shown on this map represent the known locations of the species listed here as of the date of this version. There may be additional occurrences or additional species within this area which have not been surveyed and/or mapped. Lack of information in the CNDDB about a species or an area can never be used as proof that no special status species occur in an area. Basemap: ArcGIS Online Topographic Map Service. Map date: May 8, 2018. Revised 5/15/18.

CITY OF IRWINDALE
5175 VINCENT AVENUE

Figure 9.
California Natural Diversity Database

9-Quad Search

De Novo Planning Group
A Land Use Planning, Design, and Environmental Firm

This page left intentionally blank.

V. CULTURAL RESOURCES

Would the project:	*Potentially Significant Impact*	*Less Than Significant with Mitigation Incorporation*	*Less Than Significant Impact*	*No Impact*
a) Cause a substantial adverse change in the significance of a historical resource pursuant to '15064.5?				X
b) Cause a substantial adverse change in the significance of an archaeological resource pursuant to '15064.5?				X
c) Disturb any human remains, including those interred outside of formal cemeteries?				X

Responses to Checklist Questions

Response a-c): The City of Irwindale General Plan and subsequent EIR does not identify the site as having prehistoric period cultural resources. Additionally, there are no known unique cultural, historical, paleontological or archeological resources known to occur on, or within the immediate vicinity of the project site. Furthermore, the site is not designated as a historical resource as defined by Public Resources Code § 21084.1, or listed in, or eligible for listing in the California Register of Historical Resources.

The site has previously been used for mining uses and, as such, has been subject to substantial soil disturbance. No instances of cultural resources or human remains have been unearthed on the project site. The site has been filled with engineered materials which are known to not contain archaeological, historic, or paleontological resources, or human remains. Because the fill material has been placed on the site recently and the material is well documented, there is effectively zero chance of finding a cultural resource on the site.

It is also noted that, although extremely unlikely given that the site has been filled with engineered soils at significant depths, the project would be subject to Public Resources Code § 5097, which has specific stop-work and notification procedures to follow in the event that human remains are inadvertently discovered during project implementation, as well as California Health and Safety Code § 7050.5, which has specific procedures in the event of discovery or recognition of any human remains in any location other than a dedicated cemetery.

In letters dated September 10, 2018, the City sent tribal consultation letters to tribal organizations, including Gabrieleno Band of Mission Indians - Kizh Nation. In the letters, the City provided the tribal organizations with information regarding the proposed project and requested that the tribal organizations supply any information they might have concerning prehistoric sites or traditional use areas within the project site.

The Gabrieleno Band of Mission Indians - Kizh Nation submitted a written request for a consultation meeting, pursuant to SB 18, Government Code Section 65352.3. The consultation meeting occurred on December 6, 2018. Upon further review of the project location and prior ground disturbance and fill activities, and the fact that there will be no ground disturbance outside of this footprint, the Gabrieleno Band of Mission Indians - Kizh Nation concluded that the project has a low potential to impact Tribal Cultural Resources (TCR) and therefore additional mitigation for monitoring for TCR's is not necessary. The consultation efforts have been deemed complete. Implementation of the proposed project would have ***no impact*** relative to this topic. This topic does not warrant additional analysis and will not be addressed further in the EIR.

VI. ENERGY

Would the project:	*Potentially Significant Impact*	*Less Than Significant with Mitigation Incorporation*	*Less Than Significant Impact*	*No Impact*
a) Result in potentially significant environmental impact due to wasteful, inefficient, or unnecessary consumption of energy resources, during project construction or operation?	X			
b) Conflict with or obstruct a state or local plan for renewable energy or energy efficiency?	X			

Responses to Checklist Questions

Responses a-b): Appendix F of the State CEQA Guidelines requires consideration of the potentially significant energy implications of a project. CEQA requires mitigation measures to reduce "wasteful, inefficient and unnecessary" energy usage (Public Resources Code Section 21100, subdivision [b][3]). According to Appendix F of the CEQA Guidelines, the means to achieve the goal of conserving energy include decreasing overall energy consumption, decreasing reliance on natural gas and oil, and increasing reliance on renewable energy sources. In particular, the proposed project would be considered "wasteful, inefficient, and unnecessary" if it were to violate state and federal energy standards and/or result in significant adverse impacts related to project energy requirements, energy inefficiencies, energy intensiveness of materials, cause significant impacts on local and regional energy supplies or generate requirements for additional capacity, fail to comply with existing energy standards, otherwise result in significant adverse impacts on energy resources, or conflict or create an inconsistency with applicable plan, policy, or regulation.

The proposed project includes the construction of a 545,735 sf industrial warehouse building. The amount of energy used at the project site would directly correlate to the size of the proposed warehouse, the energy consumption of associated technology, machinery, and appliances, and outdoor lighting. Other major sources of proposed project energy consumption include fuel used by vehicle trips generated during project construction and operation, and fuel used by off-road construction vehicles during construction.

Due to the size of the proposed warehouse building, the potential impacts on energy caused by the proposed project will require a detailed analysis in the EIR. Consequently, the lead agency will examine each of the two environmental issues listed in the checklist above in the EIR and will decide whether the proposed project has the potential to have a significant impact on energy resources. The EIR will include a discussion and analysis that provides calculated levels of energy use expected for the proposed project, based on commonly used modelling software (i.e. CalEEMod v.2016.3.2 and the CARB's EMFAC2014). At this point, a definitive impact conclusion for each of these environmental topics will not be made. Rather, all are considered ***potentially significant*** until a detailed analysis is prepared in the EIR.

VII. GEOLOGY AND SOILS

Would the project:	***Potentially Significant Impact***	***Less Than Significant with Mitigation***	***Less Than Significant Impact***	***No Impact***
a) Directly or indirectly cause potential substantial adverse effects, including the risk of loss, injury, or death involving:				
i) Rupture of a known earthquake fault, as delineated on the most recent Alquist-Priolo Earthquake Fault Zoning Map issued by the State Geologist for the area or based on other substantial evidence of a known fault? Refer to Division of Mines and Geology Special Publication 42.	X			
ii) Strong seismic ground shaking?	X			
iii) Seismic-related ground failure, including liquefaction?	X			
iv) Landslides?	X			
b) Result in substantial soil erosion or the loss of topsoil?		X		
c) Be located on a geologic unit or soil that is unstable, or that would become unstable as a result of the project, and potentially result in on- or off-site landslide, lateral spreading, subsidence, liquefaction or collapse?	X			
d) Be located on expansive soil, as defined in Table 18-1-B of the Uniform Building Code (1994), creating substantial direct or indirect risks to life or property?	X			
e) Have soils incapable of adequately supporting the use of septic tanks or alternative waste water disposal systems where sewers are not available for the disposal of waste water?		X		
f) Directly or indirectly destroy a unique paleontological resource or site or unique geologic feature?				X

Responses to Checklist Questions

Responses a.i-aiv), c), d): The project site is within the City of Irwindale, Los Angeles County. Mapped earthquake faults exist within the City and region, although none cross the project site. All of Southern California, including the project site, is considered to be a seismically active region. Seismic hazards that may affect the site include ground shaking, liquefaction, and dynamic settlement.

Liquefaction normally occurs when sites underlain by saturated, loose to medium dense, granular soils are subjected to relatively high ground shaking. During an earthquake, ground shaking may cause certain types of soil deposits to lose shear strength, resulting in ground settlement,

oscillation, loss of bearing capacity, landsliding, and the buoyant rise of buried structures. The majority of liquefaction hazards are associated with sandy soils, silty soils of low plasticity, and some gravelly soils. Cohesive soils are generally not considered to be susceptible to liquefaction. In general, liquefaction hazards are most severe within the upper 50 feet of the surface, except where slope faces or deep foundations are present.

Expansive soils are those that undergo volume changes as moisture content fluctuates, swelling substantially when wet or shrinking when dry. Soil expansion is dependent on many factors. Soil expansion can damage structures by cracking foundations, causing settlement and distorting structural elements. Expansion is a typical characteristic of clay-type soils. Expansive soils shrink and swell in volume during changes in moisture content, such as a result of seasonal rain events, and can cause damage to foundations, concrete slabs, roadway improvements, and pavement sections.

The on-site soils are engineered fill and import fill. The more clayey, critically expansive surface soil and fill materials will be subjected to volume changes during seasonal fluctuations in moisture content. The soils encountered at the site consist of Pits and Quarries (24.51 acres) Urban land-Soboba complex, zero to five percent slopes (0.67 acres), and Urban land, commercial-Soboba complex, zero to five percent slopes (0.87 acres).

Due to the past site uses and the seismic activity of the region, out of an abundance of caution, the lead agency will examine each of these six environmental issues listed in the checklist above in the EIR and will decide whether the proposed project has the potential to have a significant impact pertaining to earthquake faults, ground shaking, liquefaction, and landslides. At this point, a definitive impact conclusion for each of these environmental topics will not be made. Rather, all are considered ***potentially significant*** until a detailed analysis is prepared in the EIR.

The EIR will include a geology and soils analysis that presents the methodology, thresholds of significance, a consistency analysis, cumulative impact analysis, and a discussion of feasible mitigation measures that should be implemented to reduce any potential impacts on geology and soils. The project site is located in a geologically active region. The geology and soils analysis will include the following:

- A description of the local and regional geologic faults located near the project site that could affect the project.
- An assessment of the project's design standards requirements and consistency with California Building Code.
- An assessment of the proposed project's hazards related to rupture of a known earthquake fault, strong seismic ground shaking, seismic-related ground failure (including liquefaction), and landslides.
- A discussion of how the previous soil analysis and management plans that have been prepared for the project site over the last 10 years, including an Excavation Management Plan for the Manning Pit – North Portion of Manning Pit, developed by The Source Group (2009) and a Grading Progress Report, developed by Tetra Tech BAS Geosciences (2015). The Excavation Management Plan was prepared in order to comply with the requirements of both the RWQCB and the SCAQMD.
- An analysis of the project site's soils shrink-swell characteristics, and a determination of whether the on-site soil would become unstable as a result of the proposed project.

Response b): Construction activities including grading could temporarily increase soil erosion during and shortly after project construction if not properly managed. Construction-related

erosion could result in the loss of a substantial amount of nonrenewable topsoil and could adversely affect water quality in nearby surface waters.

The RWQCB requires a project specific Storm Water Pollution Prevention Plan (SWPPP) to be prepared for each project that disturbs an area one acre or larger. The SWPPP includes project specific best management measures that are designed to control drainage and erosion. The proposed project includes detailed project specific drainage plan that control storm water runoff and erosion, both during and after construction. This plan is subject to the review and approval of the City through the improvement plan process.

A Hydrology/Best Management Practices (BMPs)/LID Exhibit was prepared for the project. The Exhibit provides the hydrologic and hydraulic basis of design for the proposed stormwater control features. The SWPPP, project-specific Hydrology/BMPs/LID Exhibit, and associated improvements will manage storm water and reduce the potential for erosion. Mitigation Measure Geo-1 requires submittal of a SWPPP. Impacts associated with soil erosions as a result of the proposed project would be ***less than significant with mitigation***.

> ***Mitigation Measure Geo-1:*** *The project applicant shall submit a Notice of Intent (NOI) and Storm Water Pollution Prevention Plan (SWPPP) to the RWQCB in accordance with the NPDES General Construction Permit requirements. The SWPPP shall be designed to control pollutant discharges utilizing Best Management Practices (BMPs) and technology to reduce erosion and sediments. BMPs may consist of a wide variety of measures taken to reduce pollutants in stormwater runoff from the project site. Measures shall include temporary erosion control measures (such as silt fences, staked straw bales/wattles, silt/sediment basins and traps, check dams, geofabric, sandbag dikes, and temporary revegetation or other ground cover) that will be employed to control erosion from disturbed areas. Final selection of BMPs will be subject to approval by the City and the RWQCB. The SWPPP will be kept on site during construction activity and will be made available upon request to representatives of the RWQCB and City.*

Response e): The proposed project would not require the use of septic tanks or alternative waste water disposal systems for the disposal of waste water. Implementation of the proposed project would result in ***no impact*** relative to this topic.

Response f): As noted previously, the site has previously been used for mining uses and, as such, has been subject to substantial soil disturbance. No instances of cultural resources or human remains have been unearthed on the project site. The site has been filled with engineered materials which are known to not contain archaeological, historic, or paleontological resources, or human remains. Because the fill material has been placed on the site recently and the material is well documented, there is effectively zero chance of finding a paleontological resource on the site. Implementation of the proposed project would have ***no impact*** relative to this topic. This topic does not warrant additional analysis and will not be addressed further in the EIR.

VIII. GREENHOUSE GAS EMISSIONS

Would the project:	*Potentially Significant Impact*	*Less Than Significant with Mitigation Incorporation*	*Less Than Significant Impact*	*No Impact*
a) Generate greenhouse gas emissions, either directly or indirectly, that may have a significant impact on the environment?	X			
b) Conflict with an applicable plan, policy or regulation adopted for the purpose of reducing the emissions of greenhouse gasses?	X			

Responses to Checklist Questions

Responses a), b): Implementation of the proposed project could generate greenhouse gases (GHGs) from a variety of sources, including but not limited to vehicle trips, electricity consumption, water use, and solid waste generation. There could also be additional GHGs generated from stationary sources, such as industrial processes and/or diesel generators. It has been determined that the potential impacts from GHG emissions by the proposed project will require a detailed analysis in the EIR. As such, the lead agency will examine each of the environmental issues listed in the checklist above in the EIR and will decide whether the proposed project has the potential to have a significant impact from GHG emissions. At this point, a definitive impact conclusion for each of these environmental topics will not be made. Rather, all are considered ***potentially significant*** until a detailed analysis is prepared in the EIR.

The EIR will include a GHG emissions analysis pursuant to the requirements of the California Governor's Executive Order S-3-05 and The Global Warming Solutions Act of 2006 (AB 32), Senate Bill 375 (SB 375), and Senate Bill 32 (SB 32). The analysis will follow the California Air Pollution Control Officers Association (CAPCOA) white paper methodology and recommendations presented in "Climate Change and CEQA", which was prepared in coordination with the CARB and the Governor's Office of Planning and Research (OPR) as a common platform for public agencies to ensure that GHG emissions are appropriately considered and addressed under CEQA. Also, a GHG emissions analysis using the SCAQMD's CEQA Air Quality Analysis Handbook will be performed. These analyses will consider a regional approach toward determining whether GHG emissions are significant, and will present mitigation measures to reduce any potential impacts. The discussion and analysis will include quantification of GHGs generated by the project using the CalEEMod computer model as well as a qualitative discussion of the project's consistency with any applicable state and local plans to reduce the impacts of climate change.

IX. HAZARDS AND HAZARDOUS MATERIALS

Would the project:	*Potentially Significant Impact*	*Less Than Significant with Mitigation Incorporation*	*Less Than Significant Impact*	*No Impact*
a) Create a significant hazard to the public or the environment through the routine transport, use, or disposal of hazardous materials?	X			
b) Create a significant hazard to the public or the environment through reasonably foreseeable upset and accident conditions involving the release of hazardous materials into the environment?	X			
c) Emit hazardous emissions or handle hazardous or acutely hazardous materials, substances, or waste within one-quarter mile of an existing or proposed school?	X			
d) Be located on a site which is included on a list of hazardous materials sites compiled pursuant to Government Code Section 65962.5 and, as a result, would it create a significant hazard to the public or the environment?	X			
e) For a project located within an airport land use plan or, where such a plan has not been adopted, within two miles of a public airport or public use airport, would the project result in a safety hazard or excessive noise for people residing or working in the project area?	X			
f) Impair implementation of or physically interfere with an adopted emergency response plan or emergency evacuation plan?	X			
g) Expose people or structures, either directly or indirectly, to a significant risk of loss, injury or death involving wildland fires?	X			

Responses to Checklist Questions

Responses a-g): The proposed high-cube industrial warehouse and existing land use and zoning designations would conditionally permit a number of industrial and commercial uses that may store, use, and possibly generate a variety of hazardous materials (e.g., manufacturers, vehicle and equipment repair, dry cleaners). These types of uses are subject to a Conditional Use Permit issued by the City of Irwindale. There is a risk of release of these materials into the environment if they are not stored and handled in accordance with best management practices. There is a wide variety of hazardous materials that could be used within industrial and commercial facilities/business within the proposed warehouse building. Additionally, the project site is located within ¼-mile of an existing school, Alice Ellington Elementary School.

For the above reasons, it has been determined that the potential impacts on hazards and hazardous materials caused by the proposed project will require a detailed analysis in the EIR. Consequently, the lead agency will examine each of the seven environmental issues listed in the checklist above in the EIR and will decide whether the proposed project has the potential to have a significant impact on hazards and hazardous materials. At this point, a definitive impact

conclusion for each of these environmental topics will not be made. Rather, all are considered ***potentially significant*** until a detailed analysis is prepared in the EIR.

The EIR will include a hazards and hazardous materials analysis that presents the methodology, thresholds of significance, a consistency analysis, cumulative impact analysis, and a discussion of feasible mitigation measures that should be implemented to reduce impacts on hazards and hazardous materials. The hazards and hazardous materials analysis will include the following:

- A description of the applicable hazards-related federal, state, and local statutes, regulations, and programs that the proposed project would be required to comply with (during project construction and operation).
- An assessment of the existing Recognized Environmental Conditions (RECs) identified for the project site.
- A disclosure of the past uses of the site and recent remediation efforts completed by the City of Irwindale.
- The potential for soil contamination or unknown underground facilities (i.e., underground wells, septic systems, etc.) in the project site.
- An analysis of the types of uses that could be permitted on the project site, and what hazardous materials could be used by the proposed project based on the existing and proposed land use and zoning designations (including what would be allowed under conditional permitting).
- A discussion of the potential impacts on schools within ¼-mile from the project site.
- An analysis of the nearby hazardous materials sites compiled pursuant to Government Code § 65962.5, including the Federal Superfund Sites, State Response Sites, or Voluntary Cleanup Sites located on, or in the vicinity of the project site.
- An analysis of the potential for the project to be located within an airport land use plan or, where such a plan has not been adopted, within two miles of a public airport or public use airport, which would result in a safety hazard or excessive noise for people residing or working in the project area.
- An analysis of the potential for the proposed project to impair implementation of or physically interfere with an adopted emergency response plan or emergency evacuation plan.
- An analysis of the potential for the proposed project to expose people or structures, either directly or indirectly, to a significant risk of loss, injury or death involving wildland fires, including whether the project is located in an area prone to high risk of wildfire.

X. HYDROLOGY AND WATER QUALITY

Would the project:	**Potentially Significant Impact**	**Less Than Significant with Mitigation Incorporation**	**Less Than Significant Impact**	**No Impact**
a) Violate any water quality standards or waste discharge requirements or otherwise substantially degrade surface or ground water quality?	X			
b) Substantially decrease groundwater supplies or interfere substantially with groundwater recharge such that the project may impede sustainable groundwater management of the basin?	X			
c) Substantially alter the existing drainage pattern of the site or area, including through the alteration of the course of a stream or river or through the addition of impervious surfaces, in a manner which would:				
(i) result in substantial erosion or siltation on- or off-site;	X			
(ii) substantially increase the rate or amount of surface runoff in a manner which would result in flooding on- or offsite;	X			
(iii) create or contribute runoff water which would exceed the capacity of existing or planned stormwater drainage systems to provide substantial additional sources of polluted runoff; or	X			
(iv) impede or redirect flood flows?	X			
d) In flood hazard, tsunami, or seiche zones, risk release of pollutants due to project inundation?	X			
e) Conflict with or obstruct implementation of a water quality control plan or sustainable groundwater management plan?	X			

Responses to Checklist Questions

Response a-e): Flood hazards can result from intense rain, snowmelt, cloudbursts, or a combination of all three, or from failure of a water impoundment structure, such as a dam. Human activities have an effect on water quality when chemicals, heavy metals, hydrocarbons (auto emissions and car crank case oil), and other materials are transported with storm water into drainage systems. Construction activities can increase sediment runoff, including concrete waste and other pollutants. Based on concerns raised by the public related to hydrology and water quality, it has been determined that the EIR will require a detailed analysis of this topic. As such, the lead agency will examine each of the environmental issues listed in the checklist above in the EIR and will decide whether the proposed project has the potential to have a significant impact on hydrology and water quality. At this point a definitive impact conclusion for each of these environmental topics will not be made. Rather, all are considered ***potentially significant*** until a detailed analysis is prepared in the EIR.

This section of the EIR will provide an analysis including the methodology, thresholds of significance, a consistency analysis, cumulative impact analysis, and a discussion of feasible mitigation measures that should be implemented to reduce any potential impacts associated with hydrology and water quality.

The EIR will present the existing Federal Emergency Management Agency (FEMA) flood zones and risk of flooding in the project site and general vicinity. The project's hydrology and hydraulic calculations under existing and proposed conditions will be presented. The EIR will also evaluate the potential construction and operational impacts of the proposed project on water quality, including surface water and groundwater. This section will describe the surface drainage patterns of the project site and adjoining areas. The potential for substantial erosion on-site will be analyzed. The potential for the proposed project to substantially decrease groundwater supplies or interfere with groundwater recharge will also be analyzed. This section will also identify 303(D)-listed impaired water bodies in the vicinity of the project site. Conformity of the proposed project to water quality regulations and the project site's potential to be inundated by seiche or tsunami will also be discussed. Mitigation measures will be developed to incorporate BMPs, consistent with the requirements of the Hydrology/BMPs/LID Exhibit previously prepared for the proposed project, and any other applicable local, state, and federal requirements to reduce the potential for site runoff.

XI. LAND USE AND PLANNING

Would the project:	*Potentially Significant Impact*	*Less Than Significant with Mitigation Incorporation*	*Less Than Significant Impact*	*No Impact*
a) Physically divide an established community?			X	
b) Cause a significant environmental impact due to a conflict with any land use plan, policy, or regulation adopted for the purpose of avoiding or mitigating an environmental effect?			X	

Responses to Checklist Questions

Response a): The proposed project includes development of a high-cube industrial warehouse on an undeveloped, disturbed site that is surrounded by residential and industrial uses. The site is located on the eastern edge of the Irwindale city limits. The site was previously used for mining purposes, which is an industrial use. Additionally, the project site is considered infill development. Infill development refers to building within unused and underutilized lands within existing development patterns, typically but not exclusively in urban areas.[1] The proposed warehouse would be consistent with the existing industrial land uses to the north of the project site. Because the project is considered infill development within an existing community, the project would not physically divide an established community. Implementation of the proposed project would have a ***less than significant*** impact relative to this topic.

Response b): The key planning documents that are directly related to, or that establish a framework within which the proposed project must be consistent, include:

- City of Irwindale Commercial and Industrial Design Guidelines;
- City of Irwindale General Plan; and
- City of Irwindale Zoning Ordinance.

The project site is designated as "Industrial/Business Park" and "Residential" by the City's General Plan Land Use Map and is zoned as M-2 “Heavy Manufacturing”. The project applicant is requesting a General Plan Amendment to change the current designation from "Residential" to "Industrial/Business Park" for a portion of APN 8417-034-016. The Industrial/Business Park designation allows light industry, heavy industry, distribution, or commercial uses. The proposed high-cube industrial warehouse is consistent with the Industrial/Business Park designation. The maximum floor-area-ratio (FAR) for this category is 1.0 to 1.0. The proposed warehouse would be below the maximum FAR.

The Site Plan and Design Review process would address the site and building configuration, design, location, and impact of the proposed use, and the compliance of the project with the established Zoning Code standard and the "City of Irwindale Commercial and Industrial Design Guidelines". Therefore, impacts to land use compatibility would be ***less than significant***.

[1] California Governor’s Office of Planning and Research. Infill Development webpage. Available at: <http://opr.ca.gov/planning/land-use/infill-development/>.

XII. MINERAL RESOURCES

Would the project:	*Potentially Significant Impact*	*Less Than Significant with Mitigation Incorporation*	*Less Than Significant Impact*	*No Impact*
a) Result in the loss of availability of a known mineral resource that would be of value to the region and the residents of the state?				X
b) Result in the loss of availability of a locally-important mineral resource recovery site delineated on a local general plan, specific plan or other land use plan?				X

Responses to Checklist Questions

Response a-b): The project site is the general location of the former Irwindale Pit No. 1 (Manning Brothers Pit) Project, which proposed reclamation of the historic mining pit over ten years ago. Mining of the Manning Pit began in the 1930s and was completed in the 1970s. Mineral resources of value to the region have not been mined at the site for over 40 years. The mine closure was completed in January 2019. There is no existing mineral extraction possible at the property. Additionally, there are no oil and gas extraction wells within or near the property. Implementation of the proposed project would have ***no impact*** relative to this issue.

XIII. NOISE

Would the project result in:	*Potentially Significant Impact*	*Less Than Significant with Mitigation Incorporation*	*Less Than Significant Impact*	*No Impact*
a) Generation of a temporary or permanent increase in ambient noise levels in the vicinity of the project in excess of standards established in the local general plan or noise ordinance, or applicable standards of other agencies?	X			
b) Generation of excessive groundborne vibration or groundborne noise levels?	X			
c) For a project located within the vicinity of a private airstrip or an airport land use plan or, where such a plan has not been adopted, within two miles of a public airport or public use airport, would the project expose people residing or working in the project area to excessive noise levels?				X

Responses to Checklist Questions

Response a-b): Based on concerns raised from the public regarding noise impacts, it has been determined that the potential impacts from noise caused by the proposed project will require a detailed analysis in the EIR. As such, the lead agency will examine each of the three environmental issues listed in the checklist above in the EIR and will decide whether the proposed project has the potential to have a significant impact from noise. At this point a definitive impact conclusion for each of these environmental topics will not be made. Rather, all are considered ***potentially significant*** until a detailed analysis is prepared in the EIR.

The EIR will identify sensitive receptors, land use compatibility, noise impacts, and attenuation of noise related impacts. The noise study will also include an assessment of construction noise and vibration impacts. The noise analysis will identify the noise level standards contained in the City of Irwindale 2020 General Plan Noise Element and Municipal Code (Noise Ordinance, Chapter 9.28), as well as any germane state, and federal standards. Continuous (24-hour) and short-term noise measurements will be performed in the project site and in the project vicinity in order to quantify existing ambient noise levels from existing community noise sources.

The EIR will provide an estimate of existing traffic noise levels adjacent to the project site roadways through application of accepted traffic noise prediction methodologies. Noise sources from the project will be quantified through noise level measurements. Proposed on-site mobile and stationary noise sources will be evaluated. This will include noise generating equipment, such as HVAC systems, generators, etc., as well as mobile noise sources such as truck loading/docking/idling. The EIR will include thresholds of significance, a consistency analysis, cumulative impact analysis, and a discussion of feasible mitigation measures that should be implemented to reduce any potential impacts associated with noise.

Response c) The project has been determined to not be located within the vicinity of a private airstrip or an airport land use plan or, where such a plan has not been adopted, within two miles of a public airport or public use airport. The closest airport is the El Monte Airport approximately six miles southwest of the project site. As such, there is ***no impact*** related to this topic and it will not be addressed further in the EIR.

XIV. POPULATION AND HOUSING

Would the project:	***Potentially Significant Impact***	***Less Than Significant with Mitigation Incorporation***	***Less Than Significant Impact***	***No Impact***
a) Induce substantial unplanned population growth in an area, either directly (for example, by proposing new homes and businesses) or indirectly (for example, through extension of roads or other infrastructure)?			X	
b) Displace substantial numbers of existing people or housing, necessitating the construction of replacement housing elsewhere?				X

Responses to Checklist Questions

Response a): According to the 2016 US Census population estimates, the population in Irwindale is 1,422 people. The proposed project would result in the construction of a high-cube industrial warehouse that would generate additional employment opportunities. The additional employees may come from Irwindale or surrounding communities. The project would not directly introduce new residents to the City.

The proposed project would not include upsizing of offsite infrastructure or roadways. The installation and sizing of new infrastructure would be limited to the needs of the proposed uses. The proposed project would not induce substantial population growth in an area, either directly or indirectly. Implementation of the proposed project would have a ***less than significant*** impact relative to this topic. This topic does not warrant additional analysis and will not be addressed further in the EIR.

Response b): The project site is currently undeveloped and does not contain housing. The proposed project would not displace housing or people. Implementation of the proposed project would have ***no impact*** relative to this topic. This topic does not warrant additional analysis and will not be addressed further in the EIR.

XV. PUBLIC SERVICES

	Potentially Significant Impact	*Less Than Significant with Mitigation Incorporation*	*Less Than Significant Impact*	*No Impact*
a) Would the project result in substantial adverse physical impacts associated with the provision of new or physically altered governmental facilities, need for new or physically altered governmental facilities, the construction of which could cause significant environmental impacts, in order to maintain acceptable service ratios, response times or other performance objectives for any of the public services:				
Fire protection?			X	
Police protection?			X	
Schools?			X	
Parks?			X	
Other public facilities?			X	

Responses to Checklist Questions

Response a):

Fire Protection

Fire protection service would be provided by the LACoFD. The City of Irwindale is served by two fire stations: Irwindale Station 48 (located at 15546 Arrow Highway in Irwindale) and Baldwin Park Station 29 (located at 14334 Los Angeles Street in Baldwin Park). Both of these stations are maintained by the LACoFD. The Irwindale Station is located 0.65 miles west of the project site.

According to the City of Irwindale General Plan EIR, Station 48 has a staff consisting of 16 full-time fire fighters. The station's equipment resources include one pumper, one reserve truck, and a paramedic unit. The average response time throughout the City is six minutes. Additional emergency resources are available from other California Division of Forestry (CDF) stations, the nearest being in Baldwin Park. The CDF equipment includes a snorkel truck and a triple pump. The City has an overall fire insurance rating 3 with the availability of alarm systems.

The City and County expand fire protection services as growth and development occurs to meet the adopted fire response time as a general guideline. As noted in the City of Irwindale General Plan, the City shall regularly review the adequacy of law enforcement services and fire protection and emergency services in the City. This review effort shall be a component of the annual budget review of the contract with the Fire Department, and the City shall work with the Fire Department to correct any identified deficiencies. Local law enforcement officials and Fire Department representatives shall also continue their review of any proposed development plans. Annual reports concerning each Department will be submitted to the City Council for consideration.

Funding for fire operations and services is derived from a combination of development impact fees and the City's budget. Additionally, the project applicant would be required to pay development impact fees related to fire protection to enable the expansion of fire protection facilities, addition of fire protection personnel, and the acquisition of additional fire equipment, as needed and determined annually by the City to maintain their performance standards.

Compliance with City goals, policies, and performance standards would ensure that the proposed building would include adequate fire detection and suppression systems to allow for fires to be

quickly contained and would ensure that the fire department maintains an adequately sized staff and equipment in order to meet any additional demands generated by the project. Compliance with such regulations would reduce the burden on existing fire stations serving the project area, and would ensure that the LACoFD has adequate equipment, staff, and station space to provide fire protection and emergency services to the project area and the City.

The proposed project would not result in a need to construct a new fire station or physically alter an existing fire station. The LACoFD would receive development impact fees from the project for capital improvements and infrastructure costs even though a new facility would not be created. The fair share funds are intended to pay for project financial impacts on fire protection service. The proposed project's environmental impact to fire service is considered ***less than significant***. This topic does not warrant additional analysis and will not be addressed further in the EIR.

Police Protection

Police protection service would be provided by the Irwindale Police Department. According to the City of Irwindale General Plan EIR, the Irwindale Police Department consists of 28 full-time police officers, three reserve officers, and 12 civilian employees. The department's enforcement tools include a, stolen vehicle tracking devices, and one motor unit. Response times in most areas of the City are five minutes or less. The Department is responsible for staffing various activities aside from regular patrol duties that encompass calls for service from the business and residential community. These activities include stock car and drag racing at the Irwindale Speedway, City Park events, and various task force opportunities that combat illegal street racing, seat belt usage, and DUI violations.

The Department has jurisdiction over the City's 9.5 square miles of land that bike paths along the riverbed. A mutual aid contract with the Los Angeles County Sheriff's Department provides for special weapons teams when required, and other specialized equipment or services including Homicide investigations. Air Support services are provided through a contract with the Pasadena Police Department. Jail bookings are accomplished through a contract for services with the Glendora Police Department Jail Facility.

The City expands police protection service consistent with community needs and provides an adequate level of service based on demand. The proposed project would be required to pay development impact fees which would allow the police department to add additional staff to provide services to accommodate this growth. These fees are used to fund the direct impact on increased demand for police facilities and equipment.

The proposed project would not result in a need to construct a new police station or physically alter an existing police station. As previously stated, the development impact fees for capital improvements and infrastructure costs would be collected. The fair share funds are intended to pay for project financial impacts on police protection service. The proposed project's environmental impact to police service is considered ***less than significant***. This topic does not warrant additional analysis and will not be addressed further in the EIR.

Schools

The proposed project would result in the construction of a high-cube industrial warehouse that would generate additional employment opportunities. The additional employees may come from Irwindale or surrounding communities. The project would not directly introduce new residents to the City.

Funding for new school construction is provided through state and local revenue sources. Local school districts levy school fees on new development in accordance with SB 50. The project would be subject to these developer school fees.

The proposed project would not result in a need to construct a new school or physically alter an existing school. The proposed project would be subject to SB 50 impact fees, which would mitigate the financial impacts of the proposed project on school facilities. The proposed project's environmental impact to schools is considered ***less than significant***. This topic does not warrant additional analysis and will not be addressed further in the EIR.

Parks

City parks and recreation facilities are provided by the City of Irwindale and operated and maintained by the Recreation Department. The City's parks system consists of existing parks and other facilities, such as the Irwindale Park, Dan Diaz Recreation Center, Irwindale Swimming Pool, etc.

The project would result in the construction of a high-cube industrial warehouse. The project would not directly introduce new residents to the City, and therefore would not substantially increase demand for public park facilities to the extent that modification of existing facilities or construction of new park facilities would be necessary. As such, the proposed project would have a ***less than significant*** impact relative to this topic. This topic does not warrant additional analysis and will not be addressed further in the EIR.

Other Public Facilities

The proposed project would not result in a need for other public facilities that are not addressed above. Implementation of the proposed project would have a ***less than significant*** impact relative to this issue. This topic does not warrant additional analysis and will not be addressed further in the EIR.

XVI. RECREATION

	Potentially Significant Impact	*Less Than Significant with Mitigation Incorporation*	*Less Than Significant Impact*	*No Impact*
a) Would the project increase the use of existing neighborhood and regional parks or other recreational facilities such that substantial physical deterioration of the facility would occur or be accelerated?			X	
b) Does the project include recreational facilities or require the construction or expansion of recreational facilities which might have an adverse physical effect on the environment?			X	

Responses to Checklist Questions

Response a): The project would result in the construction of a high-cube industrial warehouse building. An open space area would be provided at the northeastern corner of the project site, adjacent to Vincent Avenue. This open space area would include picnic tables and benches and would not be available to the general public.

The proposed project would not increase the use of existing parks or other recreational facilities such that substantial physical deterioration of the facility would occur or be accelerated. Implementation of the proposed project would have a ***less than significant*** impact relative to this topic. This topic does not warrant additional analysis and will not be addressed further in the EIR.

Response b): The proposed project includes the construction of a small employee lounge area in the northeastern corner of the site. Development of the project would not require the construction or expansion of recreational facilities which might have an adverse physical effect on the environment. Implementation of the proposed project would have a ***less than significant*** impact relative to this topic. This topic does not warrant additional analysis and will not be addressed further in the EIR.

XVII. TRANSPORTATION

Would the project:	*Potentially Significant Impact*	*Less Than Significant with Mitigation Incorporation*	*Less Than Significant Impact*	*No Impact*
a) Conflict with a program plan, ordinance or policy addressing the circulation system, including transit, roadway, bicycle and pedestrian facilities?	X			
b) Would the project conflict or be inconsistent with CEQA Guidelines section 15064.3, subdivision (b)?	X			
c) Substantially increase hazards due to a geometric design feature (e.g., sharp curves or dangerous intersections) or incompatible uses (e.g., farm equipment)?	X			
d) Result in inadequate emergency access?	X			

Responses to Checklist Questions

Response a-d): Based on concerns raised by the public regarding traffic/transportation, it has been determined that traffic impacts will require a detailed analysis in the EIR. As such, the City of Irwindale will examine each of the four environmental issues listed in the checklist above in the EIR and will determine whether the proposed project has the potential to have a significant impact from traffic. At this point a definitive impact conclusion for each of these environmental topics will not be made, rather all are considered ***potentially significant*** until a detailed analysis is conducted in the EIR.

The EIR will include a Traffic Impact Analysis (TIA) to address the impacts of the proposed project on the surrounding transportation system including the roadways, transit service, pedestrian facilities, and bicycle facilities. The TIA will be conducted to address compliance with the City's General Plan and other requirements under CEQA. It will be prepared following applicable guidelines of the City of Irwindale, Los Angeles County, and Caltrans, as applicable, using the applicable level of service (LOS) standards. The EIR will describe existing and future traffic conditions and will identify the trips that will be generated by the project and the projected distribution of those trips on the roadway system. The EIR will analyze total passenger vehicle and heavy-duty truck trips that are modeled to be generated by the proposed project. Potential impacts associated with site access, on-site circulation, and consistency with CEQA Guidelines section 15064.3, subdivision (b) will also be addressed in the EIR.

The TIA will include an evaluation of existing conditions, cumulative conditions, cumulative plus project conditions, access and circulation, and project alternatives. Future conditions will be evaluated with the use of the applicable travel model. Significant impacts will be identified in accordance with the established criteria, and mitigation measures will be identified to lessen the significance of any potential impacts.

The EIR will provide an analysis including the thresholds of significance, a consistency analysis, cumulative impact analysis, and a discussion of feasible mitigation measures that should be implemented to reduce impacts associated with transportation.

XVIII. TRIBAL CULTURAL RESOURCES

	Potentially Significant Impact	*Less Than Significant with Mitigation Incorporation*	*Less Than Significant Impact*	*No Impact*
Would the project cause a substantial adverse change in the significance of a tribal cultural resource, defined in Public Resources Code Section 21074 as either a site, feature, place, cultural landscape that is geographically defined in terms of the size and scope of the landscape, sacred place, or object with cultural value to a California Native American tribe, and that is:				
a) Listed or eligible for listing in the California Register of Historical Resources, or in a local register of historical resources as defined in Public Resources Code Section 5020.1(k)?				X
b) A resource determined by the lead agency, in its discretion and supported by substantial evidence, to be significant pursuant to criteria set forth in subdivision (c) of Public Resources Code Section 5024.1? In applying the criteria set forth in subdivision (c) of Public Resources Code Section 5024.1, the lead agency shall consider the significance of the resources to a California Native American tribe.				X

Responses to Checklist Questions

Responses a-b): The City has initiated tribal consultation in accordance with Assembly Bill (AB) 52 and Senate Bill (SB) 18. In letters dated September 10, 2018, the City sent tribal consultation letters to the following tribes: Barbareño/Ventureño Band of Mission Indians, Gabrieleño/Tongva San Gabriel Band of Mission Indians, Gabrielino/Tongva Tribe, Gabrieleño Band of Mission Indians - Kizh Nation, Gabrielino/Tongva Nation, Kern Valley Indian Community, Kitanemuk & Yowlumne Teion Indians, LA City/County Native American Indian Commission, San Manuel Band of Mission Indians, Santa Ynez Band of Chumash Indians, Fernandeño Tataviam Band of Mission Indians, and Soboba Band of Luiseño Indians. In the letters, the City provided the tribes with information regarding the proposed project and requested that the tribes supply any information they might have concerning prehistoric sites or traditional use areas within the project site.

As of this writing, response letters have been received from the following tribes: San Manuel Band of Mission Indians (September 20, 2018), Gabrieleño Band of Mission Indians – Kizh Nation (September 17, 2018), and the Fernandeño Tataviam Band of Mission Indians (September 13, 2018). The San Manuel Band of Mission Indians and the Fernandeño Tataviam Band of Mission Indians noted that the project site is outside of the respective ancestral territory boundaries. The Gabrieleño Band of Mission Indians - Kizh Nation submitted a written request for a consultation meeting, pursuant to SB 18, Government Code Section 65352.3. The consultation meeting occurred on December 6, 2018. Upon further review of the project location and prior ground disturbance and fill activities, and the fact that there will be no ground disturbance outside of this footprint, the Gabrieleño Band of Mission Indians - Kizh Nation has concluded that the project has a low potential to impact Tribal Cultural Resources (TCR) and therefore additional mitigation for monitoring for TCR's is not necessary. The consultation efforts have been deemed complete.

The site has been filled with engineered materials which are known to not contain archaeological, historic, or paleontological resources, or human remains. Because the fill material has been

placed on the site recently and the material is well documented, there is effectively zero chance of finding a cultural resource on the site. Implementation of the proposed project would have ***no impact*** relative to this topic. This topic does not warrant additional analysis and will not be addressed further in the EIR.

XIX. UTILITIES AND SERVICE SYSTEMS

Would the project:	*Potentially Significant Impact*	*Less Than Significant with Mitigation Incorporation*	*Less Than Significant Impact*	*No Impact*
a) Require or result in the relocation or construction of new or expanded water, wastewater treatment or storm water drainage, electric power, natural gas, or telecommunications facilities, the construction or relocation of which could cause significant environmental effects?			X	
b) Have sufficient water supplies available to serve the project and reasonably foreseeable future development during normal, dry and multiple dry years?			X	
c) Result in a determination by the wastewater treatment provider which serves or may serve the project that it has adequate capacity to serve the projects projected demand in addition to the providers existing commitments?			X	
d) Generate solid waste in excess of state or local standards, or in excess of the capacity of local infrastructure, or otherwise impair the attainment of solid waste reductions goals?			X	
e) Comply with federal, state, and local management and reduction statutes and regulations related to solid waste?			X	

Responses to Checklist Questions

Responses a), b) and e): The Sanitation Districts of Los Angeles County provide all of Irwindale's sewer services. The great majority of the City is served by Sanitation District 22; with a small portion of its southwestern area served by District 15. Wastewater for areas served by Sanitation District 22 is treated at the San Jose Creek Water Reclamation Plan (WRP). The District's trunk sewer lines extend throughout the City, with no under-served areas. The Los Angeles County Sewer Maintenance District, located in Alhambra, provides maintenance for the City's six miles of sewers on a contract basis, including emergency services on a 24-hour basis.

The proposed project would connect to existing City infrastructure to provide sewer service. Existing sewer lines are currently located along Vincent Avenue and Allen Drive. To determine the potentially impact on sanitary sewer facilities, the flow rates shown in the Sanitation Districts of Los Angeles County loadings table for District 22 were used. Assuming a flow rate of 25 gallons per day (gpd) per 1,000 sf, the project would generate a total wastewater flow of approximately 13,643 gpd. The design capacity of the San Jose Creek WRP is 100 million gallons per day (mgd). The WRP currently processes an average flow of 69.4 mgd.[2] The total additional average wastewater flow increased by buildout of the project (13,643 gpd) would not exceed the design capacity of the San Jose Creek WRP.

The existing sewer system has sufficient capacity to handle effluent from the proposed project. The proposed project would be reviewed by the City of Irwindale, as applicable, as well as the

[2] City of Duarte. City of Hope Campus Plan Draft EIR, Wastewater Analysis. November 2017.

Sanitation Districts of Los Angeles County. Therefore, implementation of the proposed project would have a ***less than significant*** impact. This topic does not warrant additional analysis and will not be addressed further in the EIR.

Response c): Development on the project site would place impervious surfaces on the project site. Development of the project site would potentially increase local runoff and would introduce constituents into storm water that are typically associated with urban runoff. These constituents include heavy metals (such as lead, zinc, and copper) and petroleum hydrocarbons. BMPs will be applied to the proposed site development to limit the concentrations of these constituents in any site runoff that is discharged into downstream facilities to acceptable levels.

A Hydrology/BMPs/LID Exhibit was prepared for the project. The project site consists of two drainage sub-areas, 1A (12.83 acres) and 2A (12.62 acres), which roughly bisect the site. In order to meet the City of Irwindale and County of Los Angeles storm water quality requirements, biofiltration BMPs will be utilized to meet LID/storm water quality requirements. Planned biofiltration BMPs include Measure BIO-1 (biofiltration) of the County of Los Angeles Department of Public Works LID Standards Manual (February 2014). as proprietary high-flow devices that are approved for use by the County. An underground detention system will be required to mitigate peak flows, consistent with County requirements.

Any excess flow would be routed off-site via a 30-inch storm drain pipe prior to ultimately discharging to an existing 90-inch storm drain pipe which is owned and maintained by the Los Angeles County Flood Control District. The property owner will maintain the on-site drainage system, which would consist of catch basin, curb drains, and infiltration/detention system. The proposed storm drains and infiltration/detention system has been designed to convey the required flow rates and will comply with the flood protection and storm water quality requirements of the City of Irwindale and County of Los Angeles.

The owner of the property will privately maintain the on-site drainage system, which would consist of catch basin, curb drains, and infiltration/detention system. The proposed storm drains and infiltration/detention system has been designed to convey the required flow rates and will comply with the flood protection and storm water quality requirements of the City of Irwindale and County of Los Angeles.

The construction of the stormwater conveyance and detention system would ensure that the project is consistent with all applicable plans and regulations related to stormwater conveyance and detention as required by the City, and would ensure that offsite, or onsite flooding does not occur during storm events.

The construction of drainage facilities falls within the project "footprint" and the environmental impacts associated with each topic have been addressed throughout this environmental document. Implementation of the proposed project would have a ***less than significant*** impact. This topic does not warrant additional analysis and will not be addressed further in the EIR.

Response d): The City of Azusa Water Department provides basic water service to the largest portion of Irwindale from its most northeasterly boundaries to Ornelas Street, including all of the Santa Fe Dam area located to the east of the San Gabriel River Freeway. The City of Azusa Water Department would provide water to the project site.

From 1899 to 1993, the City of Azusa's water system served only the City of Azusa. In 1993, the City of Azusa purchased the Azusa Valley Water Company (AVWC), which expanded the City of Azusa's service area. Upon integration with AVWC, the City of Azusa's water system became

known as Azusa Light & Water (ALW). ALW's water supply consists of imported water, groundwater, and surface water. ALW distributes water to its 23,000 service customers through a 281-mile network of distribution mains ranging from two to 30 inches in size.

According to the ALW's 2015 Urban Water Management Plan (UWMP), the average per capita water use within ALW's service area between 1996 and 2015 is 195.8 gallons per capita per day (gpcd). The total number of employees that the proposed project would generate is unknown at this time because the exact uses and tenants of the warehouse are unknown. Generally, the project would generate between 15 and 250 employees. The project's water demand was calculated using the 195.8 gpcd average shown in the UWMP. Using this rate, the proposed project would require between 2,937 gallons per day (3.3 acre-feet per year [AFY]) and 48,950 gallons per day (approximately 54.9 AFY).

According to the ALW's 2015 UWMP, based on the current capacity of ALW's supply infrastructure, ALW can expect to meet the needs of its customers through 2040. As population and land-use densities increase, ALW understands the need to discover and support local water supply projects in order to continue its independency of imported water. According to the ALW's 2015 UWMP, the ALW had 23,997 acre-feet of available water supply in 2010. The proposed project water demand would not cause the ALW to exceed their available supply. Based on the current capacity of ALW's supply infrastructure, ALW can expect to meet the needs of its customers through 2040. Additionally, ALW's supply reliability in the near future is expected to increase through continued upgrades to its groundwater facilities, expansion of the Joseph F. Hsu Filtration Plant (from 12 to 16 mgd), continued access to imported water, and through the future potential use of recycled water.

The existing water system has sufficient capacity to handle the water demand from the proposed project. Therefore, implementation of the proposed project would have a ***less than significant*** impact. This topic does not warrant additional analysis and will not be addressed further in the EIR.

Responses f), g): The City of Irwindale has an exclusive franchise agreement with Athens Services to provide mixed waste collection services and other available programs to its residents and business community. According to the City's General Plan EIR, significant impacts associated with solid waste disposal would not occur as a result of buildout of the General Plan. Development of the project site for industrial uses is assumed in the City's General Plan EIR.

Project construction activities would generate solid waste, including excess construction materials and material removed during site clearing. However, the site is vacant, and construction would not require demolition of existing structures or removal of large quantities of waste. City Ordinance No. 713 requires that 65% of the debris from demolition and construction is recycled. It is anticipated that compliance with the construction waste requirements in CALGreen and the existing City ordinance would be sufficient to minimize solid waste generation during construction. As a result, construction impacts associated with the proposed project would be ***less than significant***.

During operation of the project, the warehouse uses would produce solid waste that would be collected and transferred to the landfill system. Using CalRecycle's manufacturing/warehouse use solid waste generation rate of 1.42 pounds per 100 sf per day, the project is expected to produce approximately 7,749 pounds per day (1,414 tons of solid waste annually).

The City of Irwindale is required to maintain a 50 percent diversion rate as mandated by the state via the California Integrated Waste Management Act for all solid waste. The project is subject to this diversion rate for solid waste generated by the project. The solid waste generated by the project would place a minimal burden on the City's required diversion rate. The increase would not require additional landfill capacity. The project is not anticipated to cause an adverse impact to either solid waste collection service or the landfill disposal system. Implementation of the proposed project would have a ***less than significant*** impact relative to this topic. This topic does not warrant additional analysis and will not be addressed further in the EIR.

XX. WILDFIRE

	Potentially Significant Impact	*Less Than Significant with Mitigation Incorporation*	*Less Than Significant Impact*	*No Impact*
If located in or near state responsibility areas or lands classified as very high fire hazard severity zones, would the project:				
a) Substantially impair an adopted emergency response plan or emergency evacuation plan?			X	
b) Due to slope, prevailing winds, and other factors, exacerbate wildfire risks, and thereby expose project occupants to, pollutant concentrations from a wildfire or the uncontrolled spread of a wildfire?			X	
c) Require the installation or maintenance of associated infrastructure (such as roads, fuel breaks, emergency water sources, power lines, or other utilities) that may exacerbate fire risk or that may result in temporary or ongoing impacts to the environment?			X	
d) Expose people or structures to significant risks, including downslope or downstream flooding or landslides, as a result of runoff, post-fire slope instability, or drainage changes?			X	

Existing Setting

The California Department of Forestry and Fire Protection (Cal Fire) has designated the northern edge of the City as a Local Responsibility Area (LRA), which is within the Very High Fire Hazard Severity Zone (FHSZ); however, this rating does not extend to the project site. Additionally, the proposed project is not located within a State Responsibility Area (SRA). Although this CEQA topic only applies to areas within an SRA or Very High FHSZ, out of an abundance of caution, these checklist questions are analyzed below.

Responses to Checklist Questions

Response a): The project site will connect to an existing network of City streets. The project includes a 28-foot-wide fire lane around the perimeter of the proposed warehouse building. The appropriate turning radiuses have been planned to accommodate fire trucks on-site. The proposed circulation improvements would allow for greater emergency access relative to existing conditions. Moreover, the proposed project will require building construction to meet the fire code requirements, and will have fire hydrants consistent with the standards of the City, and such fire hydrants will assist with fire suppression efforts if a fire was to occur. Therefore, impacts from project implementation would be considered ***less than significant*** relative to this topic. This topic does not warrant additional analysis and will not be addressed further in the EIR.

Response b): The risk of wildfire is related to a variety of parameters, including fuel loading (vegetation), fire weather (winds, temperatures, humidity levels and fuel moisture contents) and topography (degree of slope). Steep slopes contribute to fire hazard by intensifying the effects of wind and making fire suppression difficult. Fuels such as grass are highly flammable because they have a high surface area to mass ratio and require less heat to reach the ignition point. The project site is located in an area that is predominately urban and industrial, which is not considered at a

significant risk of wildlife. Development of the project would not exacerbate fire risks. Therefore, impacts from project implementation would be considered ***less than significant*** relative to this topic. This topic does not warrant additional analysis and will not be addressed further in the EIR.

Response c): The project includes development of infrastructure (water, sewer, and storm drainage). As noted above, the proposed project will require fire hydrants consistent with the standards of the City, and such fire hydrants will assist with fire suppression efforts if a fire was to occur. The proposed infrastructure improvements would allow for decreased fire risk relative to existing conditions. Therefore, impacts from project implementation would be considered ***less than significant*** relative to this topic. This topic does not warrant additional analysis and will not be addressed further in the EIR.

Response d): Landslides include rockfalls, deep slope failure, and shallow slope failure. Factors such as the geological conditions, drainage, slope, vegetation, and others directly affect the potential for landslides. One of the most common causes of landslides is construction activity that is associated with road building (i.e. cut and fill). The project site is relatively flat; therefore, even if wildfire were to occur impact the project site, the potential for a landslide in the project site is essentially non-existent. Additionally, since the project site would be covered by impervious surface, the potential for downstream flooding as a result of runoff, post-fire slope instability, or drainage changes would be greatly limited. Therefore, impacts from proposed project implementation would be considered ***less than significant*** relative to this topic. This topic does not warrant additional analysis and will not be addressed further in the EIR.

XXI. MANDATORY FINDINGS OF SIGNIFICANCE

	Potentially Significant Impact	*Less Than Significant with Mitigation Incorporation*	*Less Than Significant Impact*	*No Impact*
a) Does the project have the potential to substantially degrade the quality of the environment, substantially reduce the habitat of a fish or wildlife species, cause a fish or wildlife population to drop below self-sustaining levels, threaten to eliminate a plant or animal community, substantially reduce the number or restrict the range of a rare or endangered plant or animal or eliminate important examples of the major periods of California history or prehistory?	X			
b) Does the project have impacts that are individually limited, but cumulatively considerable? ("Cumulatively considerable" means that the incremental effects of a project are considerable when viewed in connection with the effects of past projects, the effects of other current projects, and the effects of probable future projects)?	X			
c) Does the project have environmental effects which will cause substantial adverse effects on human beings, either directly or indirectly?	X			

Responses to Checklist Questions

Responses a-c): It has been determined that the proposed project will not substantially reduce the habitat of a fish or wildlife species; cause a fish or wildlife population to drop below self-sustaining levels; threaten to eliminate a plant or animal community; substantially reduce the number or restrict the range of a rare or endangered plant or animal, or eliminate important examples of the periods of California history or prehistory. As such, these topics do not warrant additional analysis and will not be addressed further in the EIR

It has been determined that the potential for the proposed project to: degrade the quality of the environment; create cumulatively considerable impacts; or adversely affect human beings will require more detailed analysis in an EIR. As such, the City of Irwindale will examine each of these environmental issues in the EIR and will decide whether the proposed project has the potential to have significant impacts on these environmental issues. At this point a definitive impact conclusion for each of these environmental topics will not be made, rather all are considered ***potentially significant*** until a detailed analysis is prepared in the EIR.

REFERENCES

Army Corps of Engineers. 1987. Army Corps of Engineers Wetland Delineation Manual.

Azusa Light & Water. 2015 Urban Water Management Plan. June 2016.

Barbour and Major 1988. Terrestrial Vegetation of California.

C Donald Ahrens. 2006. Meteorology Today: An Introduction to Weather, Climate, & the Environment.

City of Irwindale. City of Irwindale Municipal Code. Current Ordinances through 686, Codified Ordinances through 711, Supplement No. 12.

City of Irwindale. Draft Environmental Impact Report (SCH No. 2005071047) City of Irwindale General Plan Update. September 2006.

City of Irwindale. City of Irwindale General Plan Update. June 2008.

CALEEMOD. v2016.3.2. California Air Pollution Control Officers Association (CAPCOA). Accessed May 2018 and January 2019. Available at: <http://www.caleemod.com/>.

California Air Pollution Control Officers Association. Quantifying Greenhouse Gas Mitigation Measures. August 2010.

California Air Resources Board. Risk Reduction Plan to Reduce Particulate Matter Emissions from Diesel-Fueled Engines and Vehicles. October 2000. Available at: <https://www.arb.ca.gov/diesel/documents/rrpFinal.pdf>.

California Air Resources Board. 2016. ARB Databases: Aerometric Data Analysis and Management System (ADAM). Available at: <http://www.arb.ca.gov/html/databases.htm>.

California Department of Conservation. 2016. California Important Farmland Finder. Available at: <http://maps.conservation.ca.gov/ciff/ciff.html>.

California Department of Conservation. California Land Conservation Act 2014 Status Report, The Williamson Act. March 2015.

California Department of Resources Recycling and Recovery (CalRecycle). Estimated Solid Waste Generation Rates. Accessed June 2018. Available at: <https://www2.calrecycle.ca.gov/WasteCharacterization/General/Rates >.

California Energy Commission. 2005. Global Climate Change: In Support of the 2005 Integrated Energy Policy Report. (CEC-600-2005-007.) Available at: <http://www.energy.ca.gov/2005publications/CEC-100-2005-007/CEC-100-2005-007-CMF.PDF>.

California Energy Commission. 2006. Inventory of California Greenhouse Gas Emissions and Sinks 1990 to 2004. (CEC-600-2006-013-SF.) Available at: <http://www.energy.ca.gov/2006publications/CEC-600-2006-013/CEC-600-2006-013-SF.PDF>.

California Herps. A Guide to Amphibians and Reptiles of California. Available at: <http://www.californiaherps.com/>.

Hickman, James C. 1993. Jepson Manual: Higher Plants of California.

Intergovernmental Panel on Climate Change. 2007. Climate Change 2007: The Physical Science Basis, Summary for Policy Makers. Available at: <http://fire.pppl.gov/ipcc_summary_020207.pdf>.

Kunzman Associates, Inc. Vincent Avenue Industrial Building Traffic Impact Analysis. December 12, 2018.

Sawyer, John and Todd Keeler-Wolf. 1995. A Manual of California Vegetation.

Saxelby Acoustics. Noise Contour Analysis Data Input Sheet, Project # 181202, 5175 Vincent Avenue. December 19, 2018.

Skinner, Mark W. and Bruce M. Pavlik, Eds. 2001. California Native Plant Society's Inventory of Rare and Endangered Vascular Plants of California.

South Coast Air Quality Management District. SCAQMD Air Quality Significance Thresholds. Revised March 2015.

This page left intentionally blank.

NOP Comments

DEPARTMENT OF TRANSPORTATION
DISTRICT 7 – Office of Regional Planning
100 S. MAIN STREET, MS 16
LOS ANGELES, CA 90012
PHONE (213) 897-9140
FAX (213) 897-1337
TTY 711
www.dot.ca.gov

Making Conservation a California Way of Life.

March 11, 2020

Brandi Jones, Senior Planner
City of Irwindale
Community Development Department
5050 North Irwindale Avenue
Irwindale, CA 91706

RE: 5175 Vincent Avenue Project –
Notice of Preparation (NOP)
SCH # 2018121056
GTS # 07-LA-2019-03156-RA-NOP
LA-210/PM: 37.846 – 39.835
LA-605/PM: 23.527 – 23.987
LA-10/PM: 36.31 – 36.678

Dear Brandi Jones:

Thank you for including the California Department of Transportation (Caltrans) in the environmental review process for the above-mentioned project's Notice of Preparation (NOP). The proposed project includes development of a concrete tilt-up, high-cube industrial warehouse building of approx. 545,735 sf (540,447 sf of ground floor area and 5,000 sf of mezzanine area), associated parking (included 199 standard parking stalls and 181 trailer stalls), and utility and landscaping improvements. The proposed project would connect to existing City infrastructure to provide water, sewer, and storm drainage utilities. Existing storm drain, sewer, water, and gas lines/pipes are currently located along Vincent Ave and Allen Dr. Additionally, storm water facilities (i.e., storm drains and storm drain catch basins) currently exist at the existing industrial park area adjacent north of the site.

Under Senate Bill 743 (2013), CEQA review of transportation impacts of a proposed development are adapting to eliminate consideration of delay-and capacity-based metrics such as level of service (LOS) and are instead focusing analysis on another metric of impact "Vehicle Miles Traveled (VMT). Therefore, we are moving towards replacing LOS with VMT when evaluating traffic impact. For any future project we encourage the Lead Agency to integrate transportation and land use in a way that reduces Vehicle Miles Traveled (VMT) and Greenhouse Gas (GHG) emissions by facilitating the provision of more proximate goods and services to shorten trip lengths and achieve a high level of non-motorized travel and transit use. We also encourage the Lead Agency to evaluate the potential of Transportation Demand Management (TDM) strategies in order to better manage the transportation network, as well as transit service and bicycle or pedestrian connectivity improvements.

Caltrans seeks to promote safe, accessible multimodal transportation. Methods to reduce pedestrian and bicyclist exposure to vehicles improve safety by lessening the time that the user is in the likely path of a motor vehicle. Caltrans recommends the project to consider the use of

methods such as, but not limited to, the construction of physically separated facilities such as sidewalks, raised medians, refuge islands, and off-road paths and trails, or a reduction in crossing distances through roadway narrowing.

Additionally, pedestrian and bicyclist warning signage, flashing beacons, crosswalks, signage and striping can be used to indicate to motorists that they should expect to see and yield to pedestrians and bicyclists. Visual indication from signage can be reinforced by road design features such as lane widths, landscaping, street furniture, and other design elements.

Per Caltrans' phone conversation with the City of Irwindale's Traffic Engineer, on March 11th, 2020, City will take recommendations referencing Caltrans' previous comment letter, dated January 23, 2019 to prepare the traffic study analysis.

If you have any questions regarding these comments, please contact project coordinator Reece Allen, at reece.allen@dot.ca.gov and refer to GTS# 07-LA-2019-03156-RA-NOP

Sincerely,

MIYA EDMONSON
IGR/CEQA Branch Chief
cc: Scott Morgan, State Clearinghouse

Attachment

DEPARTMENT OF TRANSPORTATION
DISTRICT 7 – Office of Regional Planning
100 S. MAIN STREET, MS 16
LOS ANGELES, CA 90012
PHONE (213) 897-9140
FAX (213) 897-1337
TTY 711
www.dot.ca.gov

Making Conservation a California Way of Life.

January 23, 2019

Brandi Jones
Senior Planner
Community Development Department
City of Irwindale
5050 North Irwindale Avenue
Irwindale, CA 91706

RE: 5175 Vincent Avenue Project – Mitigated Negative Declaration
GTS # 07-LA-2019-02131
SCH# 2018121056
Vic. LA-210/PM 37.846 - 39.835
LA 605/PM 23.527 - 23.987
LA-10/PM 36.31 - 36.678

Dear Ms. Jones:

Thank you for including the California Department of Transportation (Caltrans) in the environmental review process for the above referenced project. The proposed project includes development of a concrete tilt-up, high-cube industrial warehouse building of approximately 545,735 square feet (540,447 square feet of ground floor area and 5,000 square feet of mezzanine area), associated parking (included 199 standard parking stalls and 181 trailer stalls), and utility and landscaping improvements. The proposed project would connect to existing City infrastructure to provide water, sewer, and storm drainage utilities. Existing storm drain, sewer, water, and gas lines/pipes are currently located along Vincent Ave and Allen Drive. Additionally, storm water facilities (i.e., storm drains and storm drain catch basins) currently exist at the existing industrial park area adjacent north of the site.

Under Senate Bill 743 (2013), CEQA review of transportation impacts of a proposed development are adapting to eliminate consideration of delay-and capacity-based metrics such as level of service (LOS) and are instead focusing analysis on another metric of impact "Vehicle Miles Traveled (VMT). Therefore, we are moving towards replacing LOS with VMT when evaluating traffic impact. For any future project we encourage the Lead Agency to integrate transportation and land use in a way that reduces Vehicle Miles Traveled (VMT) and Greenhouse Gas (GHG) emissions by facilitating the provision of more proximate goods and services to shorten trip lengths and achieve a high level of non-motorized travel and transit use. We also encourage the Lead Agency to evaluate the potential of Transportation Demand Management (TDM) strategies in order to better manage the transportation network, as well as transit service and bicycle or pedestrian connectivity improvements.

Caltrans seeks to promote safe, accessible multimodal transportation. Methods to reduce pedestrian and bicyclist exposure to vehicles improve safety by lessening the time that the user is in the likely path of a motor vehicle. Caltrans recommends the project to consider the use of methods such as, but not limited to, the construction of physically separated facilities such as sidewalks, raised medians, refuge islands, and off-road paths and trails, or a reduction in crossing distances through roadway narrowing.

Additionally, pedestrian and bicyclist warning signage, flashing beacons, crosswalks, signage and striping can be used to indicate to motorists that they should expect to see and yield to pedestrians and bicyclists. Visual indication from signage can be reinforced by road design features such as lane widths, landscaping, street furniture, and other design elements.

Caltrans has reviewed the Mitigated Negative Declaration and Initial Study (MND/IS) and has the following comments:

- On page 53 of the Revised Traffic Impact Analysis (TIA) dated December 12, 2018, the project references the "...Freeway agreement executed in October 2013 and updated December 2015 between LADOT and California Department of Transportation - District 7...". This agreement does not apply to the City of Irwindale because the agreement is between Caltrans and LADOT. In addition, this agreement has also expired. Please consult with Caltrans if the City has any traffic analysis methodology and significant threshold proposal for State facilities in the future.

- On Figure 14 of the Traffic Impact Analysis, "Project Evening Peak Hour Intersection Turning Movement Volumes", projected volumes do not add up correctly for Intersections 12 and 11. Intersection 12 anticipates 56 trips northbound, but these trips cannot be found at Intersection 11, please justify this calculation. Similarly, Figure 13, location 11 has 8 missing northbound trips between Intersection 12 and 11.

- On Figure 13 of the Traffic Impact Analysis, "Project Morning Peak Hour Intersection Turning Movement Volumes", Intersection 12 (Interstate 210 Eastbound offramp onto Irwindale Ave.) is anticipated to have 64 trips utilizing the off-ramp, however, Figure 14 ("Project Evening Peak Hour Intersection Turning Movement Volumes") anticipates zero returning trips at Intersection 11 on-ramp (Interstate 210 Westbound onramp onto Irwindale Ave). Please justify this conclusion.

- Please include queuing analysis and the impact to, the Interstate 210 Westbound ramp onto Azusa Avenue in the TIA. Figure 13 of the Traffic Impact Analysis, "Project Morning Peak Hour Intersection Turning Movement Volumes", indicates Intersection 30 would experience 59 Southbound Morning Peak Trips. Caltrans assumes these trips are from the westbound on Interstate 210 because there is 30% truck assignment and 15% car assignment per Figure 11 & 12. Analysis of the Intersection between Azusa Avenue and the Interstate 210 Westbound Ramps is needed to assess the impact to this facility.

- Please include queuing analysis for the Interstate 210 on/off ramps associated with Vernon Avenue in the TIA. Based on Caltrans experience and observations, many drivers may use the Interstate 210 offramp on to Vernon Ave. for quick access to the project site instead of Irwindale Ave.

- Caltrans has concurred the traffic mitigation and Project Fair Share Contribution on Table 12. Per phone conversation between both agencies on Friday, 1/18/19, the City will condition the project approval on Caltrans' request of the above queuing analysis and potential traffic mitigation measures, if any.

- For this project, an off-ramp queuing analysis should utilize the Highway Capacity Manual (HCM) queuing analysis methodology. The project consultant may use a 95 percentile to obtain queue length. The capacity of the off-ramp should be calculated by the actual length of the off-ramp between the terminuses to the gore point with some safety factor such as 85% (Caltrans recommendation) or any other justified methods. Caltrans recommend that any queuing attributable to the project beyond 85% (for example) of this total length be considered a significant impact. The analyzed result may need to be calibrated with actual signal timing when necessary. Caltrans also requests that the City determine whether the existing, existing plus project, and existing plus project plus cumulative traffic impacts are expected to cause long queues on off-ramps. We have attached a queuing analysis template for your reference.

As a reminder, any transportation of heavy construction equipment and/or materials which requires use of oversized-transport vehicles on State highways will need a Caltrans transportation permit. We recommend large size truck trips be limited to off-peak commute periods.

If you have any questions regarding these comments, please contact project coordinator Reece Allen, at reece.allen@dot.ca.gov and refer to GTS# 07-LA-2019-02131

Sincerely,

MIYA EDMONSON
IGR/CEQA Branch Chief

Attachment

Cc: City of Azusa, State Clearinghouse

March 10, 2020

Brandi Jones
Senior Planner
City of Irwindale
5050 North Irwindale Avenue
Irwindale, California 91706

Dear Brandi Jones:

Thank you for providing the California Air Resources Board (CARB) with the opportunity to comment on the Notice of Preparation (NOP) for the 5175 Vincent Avenue Project (Project) Draft Environmental Impact Report (DEIR), State Clearinghouse No. 2018121056. The Project consists of the construction and operation of approximately 545,735 square feet of high-cube industrial warehouse space. The Project is proposed within the City of Irwindale (City), California, which is the lead agency for California Environmental Quality Act (CEQA) purposes. Implementation of the Project would require a change to the existing land use designation from "Residential" to "Industrial/Business Park".

Freight facilities, such as warehouse facilities, can result in high daily volumes of heavy-duty diesel truck traffic and operation of on-site equipment (e.g., forklifts and yard tractors) that emit toxic diesel emissions, and contribute to regional air pollution and global climate change.[1] CARB has reviewed the NOP and is concerned about the air pollution and health risk impacts that would result should the City approve the Project, and the land-use change from "Residential" to "Industrial/Business Park", to build the proposed high-cube industrial warehouse building.

I. The Project Would Increase Exposure to Air Pollution in Disadvantaged Communities

The Project, if approved, will expose nearby disadvantaged communities to elevated air pollution. Residences are located south, east, and west of the Project site, with the closest residences situated approximately 85 feet from the Project's eastern boundary. In addition to residences, four schools (Alice M. Ellington Elementary School, Merwin Elementary School, Northview High School, and Las Palmas Middle School), two daycare centers (Covina KinderCare and Kiddie Cove Daycare) and a senior center (Irwindale Senior Center) are located within 1 mile of the Project. The community is

[1] With regard to greenhouse gas emissions from this project, CARB has been clear that local governments and project proponents have a responsibility to properly mitigate these impacts. CARB's guidance, set out in detail in the Scoping Plan issued in 2017, makes clear that in CARB's expert view local mitigation is critical to achieving climate goals and reducing greenhouse gases below levels of significance.

surrounded by existing toxic diesel particulate matter (diesel PM) emission sources, which include existing industrial uses and vehicular traffic along Interstate 210 (I-210), Interstate 605 (I-605), and Interstate 10 (I-10). Due to the Project's proximity to residences, schools, daycare centers, and a senior center already disproportionately burdened by multiple sources of air pollution, CARB is concerned with the potential cumulative health impacts associated with the construction and operation of the Project.

The State of California has placed additional emphasis on protecting local communities from the harmful effects of air pollution through the passage of Assembly Bill 617 (AB 617) (Garcia, Chapter 136, Statutes of 2017). AB 617 is a significant piece of air quality legislation that highlights the need for further emission reductions in communities with high exposure burdens, like those in which the Project is located. Diesel PM emissions generated during the construction and operation of the Project would negatively impact the community, which is already disproportionally impacted by air pollution from existing industrial uses, and traffic on I-210, I-605, and I-10.

Through its authority under Health and Safety Code section 39711, the California Environmental Protection Agency (CalEPA) is charged with the duty to identify disadvantaged communities. CalEPA bases its identification of these communities on geographic, socioeconomic, public health, and environmental hazard criteria (Health and Safety Code, section 39711, subsection (a)). In this capacity, CalEPA currently defines a disadvantaged community, from an environmental hazard and socioeconomic standpoint, as a community that scores within the top 25 percent of the census tracts, as analyzed by the California Communities Environmental Health Screening Tool Version 3.0 (CalEnviroScreen). CalEnviroScreen uses a screening methodology to help identify California communities currently disproportionately burdened by multiple sources of pollution. The census tract containing the Project is within the top 5 percent for Pollution Burden[2] and is considered a disadvantaged community; therefore, CARB urges the City to ensure that the Project does not adversely impact neighboring disadvantaged communities.

II. The DEIR Should Quantify and Discuss the Potential Cancer Risks at Residential and Other Sensitive Receptors in the Vicinity of the Proposed Industrial Building

The Project, as proposed in the NOP, will not include refrigerated storage. The operation of cold storage warehouses would include trucks with transportation refrigeration units (TRU)[3] that emit significantly higher levels of toxic diesel emissions, oxides of nitrogen (NO_x), and greenhouse gases than trucks without TRUs. To ensure TRUs will not operate within the Project site, CARB urges the City to include one of the following design measures in a revised DEIR:

---

[2] Pollution Burden represents the potential exposures to pollutants and the adverse environmental conditions caused by pollution.

[3] TRUs are refrigeration systems powered by diesel internal combustion engines that protect perishable goods during transport in an insulated truck and trailer vans, rail cars, and domestic shipping containers.

- A Project design measure requiring contractual language in tenant lease agreements that prohibits tenants from operating TRUs within the Project site; or

- A condition requiring a restrictive covenant over the parcel that prohibits the applicant's use of TRUs on the property, unless the applicant seeks and receives an amendment to its conditional use permit allowing such use.

If the City chooses to allow TRUs within the Project site, CARB urges the City to model air pollutant emissions from on-site TRUs, as well as prepare a health risk assessment (HRA) that shows the potential health risks. The DEIR should also include the air pollutant reduction measures listed in Attachment A.

In addition to the health risk associated with operations, construction health risks should be included in the air quality section of the DEIR and the Project's HRA. Construction of the Project would result in short-term diesel emissions from the use of both on-road and off-road diesel equipment. The Office of Environmental Health Hazard Assessment's (OEHHA) guidance recommends assessing cancer risks for construction projects lasting longer than two months. Since construction would very likely occur over a period lasting longer than two months, the HRA prepared for the Project should include health risks for existing residences near the Project site during construction.

The HRA prepared in support of the Project should be based on the latest OEHHA guidance (2015 Air Toxics Hot Spots Program Guidance Manual for Preparation of Health Risk Assessments),[4] and the South Coast Air Quality Management District's (SCAQMD) CEQA Air Quality Handbook.[5] The HRA should evaluate and present the existing baseline (current conditions), future baseline (full build-out year, without the Project), and future year with the Project. The health risks modeled under both the existing and the future baselines should reflect all applicable federal, state, and local rules and regulations. By evaluating health risks using both baselines, the public and City planners will have a complete understanding of the potential health impacts that would result from the Project.

III. Conclusion

To reduce the exposure of toxic diesel emissions in disadvantaged communities already disproportionally impacted by air pollution, the final design of the Project should include all existing and emerging zero-emission technologies to minimize diesel and NO_x emission exposure to all neighboring communities, as well as the greenhouse gases that contribute to climate change. CARB encourages the City and applicant to

---

[4] Office of Environmental Health Hazard Assessment (OEHHA). Air Toxics Hot Spots Program Guidance Manual for Preparation of Health Risk Assessments. February 2015. Accessed at: https://oehha.ca.gov/media/downloads/crnr/2015guidancemanual.pdf.
[5] SCAQMD's 1993 Handbook can be found at: http://www.aqmd.gov/home/rules-compliance/ceqa/air-quality-analysis-handbook.

implement the measures listed in Attachment A of this comment letter to reduce the Project's construction and operational air pollution emissions.

Given the breadth and scope of projects subject to CEQA review throughout California that have air quality and greenhouse gas impacts, coupled with CARB's limited staff resources to substantively respond to all issues associated with a project, CARB must prioritize its substantive comments here based on staff time, resources, and its assessment of impacts. CARB's deliberate decision to substantively comment on some issues does not constitute an admission or concession that it substantively agrees with the lead agency's findings and conclusions on any issues on which CARB does not substantively submit comments.

CARB appreciates the opportunity to comment on the NOP for the Project and can provide assistance on zero-emission technologies and emission reduction strategies, as needed. Please include CARB on your State Clearinghouse list of selected State agencies that will receive the DEIR as part of the comment period. If you have questions, please contact Stanley Armstrong, Air Pollution Specialist, at (916) 440-8242 or via email at stanley.armstrong@arb.ca.gov.

Sincerely,

Richard Boyd

Richard Boyd, Chief
Risk Reduction Branch
Transportation and Toxics Division

Attachment

cc: See next page.

cc: State Clearinghouse
P.O. Box 3044
Sacramento, California 95812

Morgan Capilla
NEPA Reviewer
U.S. Environmental Protection Agency
Air Division, Region 9
75 Hawthorne Street
San Francisco, California 94105

Carlo De La Cruz
Senior Campaign Representative
Sierra Club
714 West Olympic Boulevard, Suite 1000
Los Angeles, California 90015

Lijin Sun
Program Supervisor
CEQA Intergovernmental Review
South Coast Air Quality Management District
lsun@aqmd.gov

Andrea Vidaurre
Policy Analyst
Center for Community Action and Environmental Justice
P.O. Box 33124
Riverside, California 92519

Stanley Armstrong
Air Pollution Specialist
Risk Analysis Section
Transportation and Toxics Division

ATTACHMENT A

Recommended Air Pollution Emission Reduction Measures for Warehouses and Distribution Centers

The California Air Resources Board (CARB) recommends developers and government planners use all existing and emerging zero to near-zero emission technologies during project construction and operation to minimize public exposure to air pollution. Below are some measures, currently recommended by CARB, specific to warehouse and distribution center projects. These recommendations are subject to change as new zero-emission technologies become available.

Recommended Construction Measures

1. Ensure the cleanest possible construction practices and equipment are used. This includes eliminating the idling of diesel-powered equipment and providing the necessary infrastructure (e.g., electrical hookups) to support zero and near-zero equipment and tools.

2. Implement, and plan accordingly for, the necessary infrastructure to support the zero and near-zero emission technology vehicles and equipment that will be operating on site. Necessary infrastructure may include the physical (e.g., needed footprint), energy, and fueling infrastructure for construction equipment, on-site vehicles and equipment, and medium-heavy and heavy-heavy duty trucks.

3. In construction contracts, include language that requires all off-road diesel-powered equipment used during construction to be equipped with Tier 4 or cleaner engines, except for specialized construction equipment in which Tier 4 engines are not available. In place of Tier 4 engines, off-road equipment can incorporate retrofits, such that, emission reductions achieved equal or exceed that of a Tier 4 engine.

4. In construction contracts, include language that requires all off-road equipment with a power rating below 19 kilowatts (e.g., plate compactors, pressure washers) used during project construction be battery powered.

5. In construction contracts, include language that requires all heavy-duty trucks entering the construction site, during the grading and building construction phases be model year 2014 or later. All heavy-duty haul trucks should also meet CARB's lowest optional low-NO_x standard starting in the year 2022.[1]

[1] In 2013, CARB adopted optional low-NO_x emission standards for on-road heavy-duty engines. CARB encourages engine manufacturers to introduce new technologies to reduce NO_x emissions below the current mandatory on-road heavy-duty diesel engine emission standards for model year 2010 and later. CARB's optional low-NO_x emission standard is available at: https://www.arb.ca.gov/msprog/onroad/optionnox/optionnox.htm.

6. In construction contracts, include language that requires all construction equipment and fleets to be in compliance with all current air quality regulations. CARB staff is available to assist in implementing this recommendation.

Recommended Operation Measures

1. Include contractual language in tenant lease agreements that requires tenants to use the cleanest technologies available, and to provide the necessary infrastructure to support zero-emission vehicles and equipment that will be operating on site.

2. Include contractual language in tenant lease agreements that requires all loading/unloading docks and trailer spaces be equipped with electrical hookups for trucks with transport refrigeration units (TRU) or auxiliary power units. This requirement will substantially decrease the amount of time that a TRU powered by a fossil-fueled internal combustion engine can operate at the project site. Use of zero-emission all-electric plug-in TRUs, hydrogen fuel cell transport refrigeration, and cryogenic transport refrigeration are encouraged and can also be included in lease agreements.[2]

3. Include contractual language in tenant lease agreements that requires all TRUs entering the project site be plug-in capable.

4. Include contractual language in tenant lease agreements that requires future tenants to exclusively use zero-emission light and medium-duty delivery trucks and vans.

5. Include contractual language in tenant lease agreements requiring all TRUs, trucks, and cars entering the Project site be zero-emission.

6. Include contractual language in tenant lease agreements that requires all service equipment (e.g., yard hostlers, yard equipment, forklifts, and pallet jacks) used within the project site to be zero-emission. This equipment is widely available.

7. Include contractual language in tenant lease agreements that requires all heavy-duty trucks entering or on the project site to be model year 2014 or later, expedite a transition to zero-emission vehicles, and be fully zero-emission beginning in 2030.

---

[2] CARB's Technology Assessment for Transport Refrigerators provides information on the current and projected development of TRUs, including current and anticipated costs. The assessment is available at: https://www.arb.ca.gov/msprog/tech/techreport/tru_07292015.pdf.

8. Include contractual language in tenant lease agreements that requires the tenant be in, and monitor compliance with, all current air quality regulations for on-road trucks including CARB's Heavy-Duty (Tractor-Trailer) Greenhouse Gas Regulation,[3] Periodic Smoke Inspection Program (PSIP),[4] and the Statewide Truck and Bus Regulation.[5]

9. Include contractual language in tenant lease agreements restricting trucks and support equipment from idling longer than five minutes while on site.

10. Include contractual language in tenant lease agreements that limits on-site TRU diesel engine runtime to no longer than 15 minutes. If no cold storage operations are planned, include contractual language and permit conditions that prohibit cold storage operations unless a health risk assessment is conducted and the health impacts fully mitigated.

11. Include rooftop solar panels for each proposed warehouse to the extent feasible, with a capacity that matches the maximum allowed for distributed solar connections to the grid.

---

[3] In December 2008, CARB adopted a regulation to reduce greenhouse gas emissions by improving the fuel efficiency of heavy-duty tractors that pull 53-foot or longer box-type trailers. The regulation applies primarily to owners of 53-foot or longer box-type trailers, including both dry-van and refrigerated-van trailers, and owners of the heavy-duty tractors that pull them on California highways. CARB's Heavy-Duty (Tractor-Trailer) Greenhouse Gas Regulation is available at: https://www.arb.ca.gov/cc/hdghg/hdghg.htm.

[4] The PSIP program requires that diesel and bus fleet owners conduct annual smoke opacity inspections of their vehicles and repair those with excessive smoke emissions to ensure compliance. CARB's PSIP program is available at: https://www.arb.ca.gov/enf/hdvip/hdvip.htm.

[5] The regulation requires that newer heavier trucks and buses must meet particulate matter filter requirements beginning January 1, 2012. Lighter and older heavier trucks must be replaced starting January 1, 2015. By January 1, 2023, nearly all trucks and buses will need to have 2010 model year engines or equivalent. CARB's Statewide Truck and Bus Regulation is available at: https://www.arb.ca.gov/msprog/onrdiesel/onrdiesel.htm.

State of California – Natural Resources Agency
DEPARTMENT OF FISH AND WILDLIFE
South Coast Region
3883 Ruffin Road
San Diego, CA 92123
(858) 467-4201
www.wildlife.ca.gov

GAVIN NEWSOM, Governor
CHARLTON H. BONHAM, Director

March 10, 2020

Brandi Jones
City of Irwindale
5050 North Irwindale Avenue
Irwindale, CA 91706
BJones@IrwindaleCA.gov

Subject: Comments on the Notice of Preparation of a Draft Environmental Impact Report for 5175 Vincent Avenue Project, SCH #2018121056, Los Angeles County

Dear Ms. Jones:

The California Department of Fish and Wildlife (CDFW) has reviewed the above-referenced Notice of Preparation (NOP) of a Draft Environmental Impact Report (DEIR) for 5175 Vincent Avenue Project (Project).

Thank you for the opportunity to provide comments and recommendations regarding those activities involved in the Project that may affect California fish and wildlife. Likewise, we appreciate the opportunity to provide comments regarding those aspects of the Project that CDFW, by law, may be required to carry out or approve through the exercise of its own regulatory authority under the Fish and Game Code.

CDFW's Role

CDFW is California's Trustee Agency for fish and wildlife resources and holds those resources in trust by statute for all the people of the State [Fish & Game Code, §§ 711.7, subdivision (a) & 1802; Public Resources Code, § 21070; California Environmental Quality Act (CEQA) Guidelines, § 15386, subdivision (a)]. CDFW, in its trustee capacity, has jurisdiction over the conservation, protection, and management of fish, wildlife, native plants, and habitat necessary for biologically sustainable populations of those species (Id., § 1802). Similarly, for purposes of CEQA, CDFW is charged by law to provide, as available, biological expertise during public agency environmental review efforts, focusing specifically on projects and related activities that have the potential to adversely affect state fish and wildlife resources.

CDFW is also submitting comments as a Responsible Agency under CEQA (Public Resources Code, § 21069; CEQA Guidelines, § 15381). CDFW expects that it may need to exercise regulatory authority as provided by the Fish and Game Code, including lake and streambed alteration regulatory authority (Fish & Game Code, § 1600 et seq.). Likewise, to the extent implementation of the Project as proposed may result in "take" (see Fish & Game Code, § 2050) of any species protected under the California Endangered Species Act (CESA; Fish & Game Code, § 2050 et seq.) or the Native Plant Protection Act (NPPA; Fish & Game Code, §1900 et seq.), CDFW recommends the Project proponent obtain appropriate authorization under the Fish and Game Code.

Project Location: The Project site is located north of a Los Angeles County-owned pit, east of Allen Drive, south of Arrow Highway, and west of Vincent Avenue in Irwindale, California. The Project site totals approximately 26.05 acres and is comprised of two vacant parcels; one of which is an undeveloped, recently filled, former aggregate mine pit known as the Manning Pit. The Assessor's Parcel Numbers (APNs) for the Project site are 8417-034-015 and 8417-034-016.

Project Description/Objectives: The proposed Project includes development of a concrete tilt-up, high-cube industrial warehouse building of approximately 545,735 square feet (sf; 540,447 sf of ground floor area and 5,000 sf of mezzanine area), associated parking (including standard parking stalls and trailer stalls), and utility and landscaping improvements. The proposed Project would connect to existing infrastructure to provide water, sewer, and storm drainage utilities.

COMMENTS AND RECOMMENDATIONS

CDFW offers the following comments and recommendations to assist the City of Irwindale in adequately identifying and/or mitigating the Project's significant, or potentially significant, direct and indirect impacts on fish and wildlife (biological) resources.

Specific Comments

1) Lake and Streambed Alteration Agreement (LSA): Figure 3 (Aerial View of Project Site), the United States Geological Survey - The National Map, and historic aerial photography indicate that the Project activities could impact the bank of a perennial lake/pond directly adjacent to the southern Project boundary.

    a) As a Responsible Agency under CEQA, CDFW has authority over activities in streams and/or lakes that will divert or obstruct the natural flow; or change the bed, channel, or bank (including vegetation associated with the stream or lake) of a river or stream; or use material from a streambed. For any such activities, the Project applicant (or "entity") must provide written notification to CDFW pursuant to section 1600 et seq. of the Fish and Game Code. Based on this notification and other information, CDFW determines whether an LSA Agreement (Agreement) with the applicant is required prior to conducting the proposed activities. CDFW's issuance of an Agreement for a Project that is subject to CEQA will require related environmental compliance actions by CDFW as a Responsible Agency. As a Responsible Agency, CDFW may consider the CEQA document prepared by the local jurisdiction (Lead Agency) for the Project. To minimize additional requirements by CDFW pursuant to section 1600 *et seq.* and/or under CEQA, the DEIR should fully identify the potential impacts to the stream or riparian resources and provide adequate avoidance, mitigation, monitoring and reporting commitments for issuance of the LSA (available at www.wildlife.ca.gov/habcon/1600).

    b) The Project area is directly adjacent to areas that support aquatic, riparian, and wetland habitats; therefore, CDFW recommends an investigation of the site for possible surface drainages to the surrounding areas that may feed into this lake/pond. A preliminary jurisdictional delineation of the streams and their associated riparian habitats should be included in the DEIR. The delineation should be conducted pursuant to the U. S. Fish and Wildlife Service (USFWS) wetland definition adopted by the CDFW (Cowardin et al. 1970). Some wetland and riparian

habitats subject to CDFW's authority may extend beyond the jurisdictional limits of the U.S. Army Corps of Engineers' section 404 permit and Regional Water Quality Control Board section 401 Certification.

c) In areas of the Project site which may support ephemeral streams, herbaceous vegetation, woody vegetation, and woodlands also serve to protect the integrity of ephemeral channels and help maintain natural sedimentation processes; therefore, CDFW recommends effective setbacks be established to maintain appropriately-sized vegetated buffer areas adjoining ephemeral drainages.

d) Project-related changes in upstream and downstream drainage patterns, runoff, and sedimentation should be included and evaluated in the DEIR.

e) As part of the LSA Notification process, CDFW requests the 100, 50, 25, 10, 5, and 2-year frequency storm event for existing and proposed conditions. CDFW recommends the DEIR evaluate the results and address avoidance, minimization, and/or mitigation measures that may be necessary to reduce potential significant impacts.

2) Nesting Birds. As stated in the Initial Study, "some landscape trees are located along the perimeter of the Project site." These trees may provide potential nesting habitat and Project activities may impact nesting birds. CDFW recommends that measures be taken to avoid Project impacts to nesting birds. Migratory nongame native bird species are protected by international treaty under the Federal Migratory Bird Treaty Act (MBTA) of 1918 (Code of Federal Regulations, Title 50, § 10.13). Sections 3503, 3503.5, and 3513 of the California Fish and Game Code prohibit take of all birds and their active nests including raptors and other migratory nongame birds (as listed under the Federal MBTA). Proposed Project activities including (but not limited to) staging and disturbances to native and nonnative vegetation, structures, and substrates should occur outside of the avian breeding season which generally runs from February 15 through August 31 (as early as January 1 for some raptors) to avoid take of birds or their eggs. If avoidance of the avian breeding season is not feasible, CDFW recommends surveys by a qualified biologist with experience in conducting breeding bird surveys to detect protected native birds occurring in suitable nesting habitat that is to be disturbed and (as access to adjacent areas allows) any other such habitat within 300-feet of the disturbance area (within 500-feet for raptors). Project personnel, including all contractors working on site, should be instructed on the sensitivity of the area. Reductions in the nest buffer distance may be appropriate depending on the avian species involved, ambient levels of human activity, screening vegetation, or possibly other factors.

3) Landscaping. Figure 5 (Site Plan) indicates that landscaping will occur in various areas of the Project site. CDFW recommends using native, locally appropriate plant species for landscaping on the Project site. CDFW recommends invasive/exotic plants, including pepper trees (*Schinus* genus) and fountain grasses (*Pennisetum* genus), be restricted from use in landscape plans for this Project. A list of invasive/exotic plants that should be avoided as well as suggestions for better landscape plants can be found at https://www.cal-ipc.org/solutions/prevention/landscaping/.

4) Tree Replacement: Figure 3 (Aerial View of Project Site) and aerial photography indicate the presence of trees on the western boundary of the Project site. In addition, Mitigation Measure Bio-1 indicates Project activities will include tree removal. To compensate for any

loss of trees, CDFW recommends replacing all non-native trees removed as a result of the proposed work activities at least a 1:1 ratio with native trees. CDFW recommends replacing native trees at least a 3:1 ratio with a combination of native trees and/or appropriate understory and lower canopy plantings. CDFW recommends that any loss of oaks should be replanted at a minimum 10:1 ratio.
Replacement oaks should come from nursery stock grown from locally sourced acorns, or from acorns gathered locally, preferably from the same watershed in which they were planted.

5) Biological Baseline Assessment and Impact Analysis. Figure 3 (Aerial View of Project Site) and aerial photography indicate that the west border of the Project site contains trees and other vegetation. In addition, the area south of the Project site is shown to contain groundwater dependent vegetation identified as Riversidean alluvial scrub on the Natural Communities Commonly Associated with Groundwater (NCCAG) Dataset (USDAFS, 2014). CDFW recommends providing a complete assessment and impact analysis of the flora and fauna within and adjacent to the Project area, with emphasis upon identifying endangered, threatened, sensitive, regionally and locally unique species, and sensitive habitats. Impact analysis will aid in determining any direct, indirect, and cumulative biological impacts, as well as specific mitigation or avoidance measures necessary to offset those impacts, as referred in General Comment 3 and 4. CDFW recommends avoiding any sensitive natural communities found on or adjacent to the Project. CDFW also considers impacts to Species of Special Concern a significant direct and cumulative adverse effect without implementing appropriate avoid and/or mitigation measures. The DEIR should include the following information:

   a) Information on the regional setting that is critical to an assessment of environmental impacts, with special emphasis on resources that are rare or unique to the region [CEQA Guidelines, § 15125(c)]. The DEIR should include measures to fully avoid and otherwise protect Sensitive Natural Communities from Project-related impacts. Project implementation may result in impacts to rare or endangered plants or plant communities that have been recorded adjacent to the Project vicinity. CDFW considers these communities as threatened habitats having both regional and local significance. Plant communities, alliances, and associations with a state-wide ranking of S1, S2, S3 and S4 should be considered sensitive and declining at the local and regional level. These ranks can be obtained by visiting https://www.wildlife.ca.gov/Data/VegCAMP/Natural-Communities#sensitive%20natural%20communities;

   b) A thorough, recent, floristic-based assessment of special status plants and natural communities, following CDFW's *Protocols for Surveying and Evaluating Impacts to Special Status Native Plant Populations and Natural Communities* (see https://nrm.dfg.ca.gov/FileHandler.ashx?DocumentID=18959&inline);

   c) Floristic, alliance- and/or association-based mapping and vegetation impact assessments conducted at the Project site and within the neighboring vicinity. *The Manual of California Vegetation*, second edition, should also be used to inform this mapping and assessment (Sawyer, 2008). Adjoining habitat areas should be included in this assessment where site activities could lead to direct or indirect impacts offsite. Habitat mapping at the alliance level will help establish baseline vegetation conditions;

d) A complete, recent, assessment of the biological resources associated with each habitat type on site and within adjacent areas that could also be affected by the Project. CDFW's California Natural Diversity Data Base (CNDDB) in Sacramento should be contacted to obtain current information on any previously reported sensitive species and habitat. CDFW recommends that CNDDB Field Survey Forms be completed and submitted to CNDDB to document survey results. Online forms can be obtained and submitted at http://www.dfg.ca.gov/biogeodata/cnddb/submitting_data_to_cnddb.asp;

e) A complete, recent, assessment of rare, threatened, and endangered, and other sensitive species on site and within the area of potential effect, including California Species of Special Concern and California Fully Protected Species (Fish & Game Code, §§ 3511, 4700, 5050 and 5515). Species to be addressed should include all those which meet the CEQA definition of endangered, rare or threatened species (CEQA Guidelines, § 15380). Seasonal variations in use of the Project area should also be addressed. Focused species-specific surveys, conducted at the appropriate time of year and time of day when the sensitive species are active or otherwise identifiable, are required. Acceptable species-specific survey procedures should be developed in consultation with CDFW and the USFWS; and,

f) A recent, wildlife and rare plant survey. CDFW generally considers biological field assessments for wildlife to be valid for a one-year period, and assessments for rare plants may be considered valid for a period of up to three years. Some aspects of the proposed Project may warrant periodic updated surveys for certain sensitive taxa, particularly if build out could occur over a protracted time frame, or in phases.

General Comments

1) Project Description and Alternatives. To enable CDFW to adequately review and comment on the proposed Project from the standpoint of the protection of plants, fish, and wildlife, we recommend the following information be included in the DEIR:

   a) A complete discussion of the purpose and need for, and description of, the proposed Project, including all staging areas and access routes to the construction and staging areas; and,

   b) A range of feasible alternatives to Project component location and design features to ensure that alternatives to the proposed Project are fully considered and evaluated. The alternatives should avoid or otherwise minimize direct and indirect impacts to sensitive biological resources and wildlife movement areas.

2) CESA. CDFW considers adverse impacts to a species protected by CESA to be significant without mitigation under CEQA. As to CESA, take of any endangered, threatened, candidate species, or State-listed rare plant species that results from the Project is prohibited, except as authorized by state law (Fish and Game Code, §§ 2080, 2085; Cal. Code Regs., tit. 14, § 786.9). Consequently, if the Project, Project construction, or any Project-related activity during the life of the Project will result in take of a species designated as endangered or threatened, or a candidate for listing under CESA, CDFW recommends that the Project proponent seek appropriate take authorization under CESA prior to implementing the

Project. Appropriate authorization from CDFW may include an Incidental Take Permit (ITP) or a consistency determination in certain circumstances, among other options [Fish & Game Code, §§ 2080.1, 2081, subds. (b) and (c)]. Early consultation is encouraged, as significant modification to a Project and mitigation measures may be required in order to obtain a CESA Permit. Revisions to the Fish and Game Code, effective January 1998, may require that CDFW issue a separate CEQA document for the issuance of an ITP unless the Project CEQA document addresses all Project impacts to CESA-listed species and specifies a mitigation monitoring and reporting program that will meet the requirements of an ITP. For these reasons, biological mitigation monitoring and reporting proposals should be of sufficient detail and resolution to satisfy the requirements for a CESA ITP.

3) Biological Direct, Indirect, and Cumulative Impacts. To provide a thorough discussion of direct, indirect, and cumulative impacts expected to adversely affect biological resources, with specific measures to offset such impacts, the following should be addressed in the DEIR:

   a) A discussion of potential adverse impacts from lighting, noise, human activity, exotic species, and drainage. The latter subject should address Project-related changes on drainage patterns and downstream of the Project site; the volume, velocity, and frequency of existing and post-Project surface flows; polluted runoff; soil erosion and/or sedimentation in streams and water bodies; and, post-Project fate of runoff from the Project site. The discussion should also address the proximity of the extraction activities to the water table, whether dewatering would be necessary and the potential resulting impacts on the habitat (if any) supported by the groundwater. Mitigation measures proposed to alleviate such Project impacts should be included;

   b) A discussion regarding indirect Project impacts on biological resources, including resources in nearby public lands, open space, adjacent natural habitats, riparian ecosystems, and any designated and/or proposed or existing reserve lands (e.g., preserve lands associated with a Natural Community Conservation Plan (NCCP, Fish & Game Code, § 2800 et. seq.). Impacts on, and maintenance of, wildlife corridor/movement areas, including access to undisturbed habitats in adjacent areas, should be fully evaluated in the DEIR;

   c) An analysis of impacts from land use designations and zoning located nearby or adjacent to natural areas that may inadvertently contribute to wildlife-human interactions. A discussion of possible conflicts and mitigation measures to reduce these conflicts should be included in the DEIR; and,

   d) A cumulative effects analysis, as described under CEQA Guidelines section 15130. General and specific plans, as well as past, present, and anticipated future projects, should be analyzed relative to their impacts on similar plant communities and wildlife habitats.

4) Compensatory Mitigation. The DEIR should include mitigation measures for adverse Project-related impacts to sensitive plants, animals, and habitats. Mitigation measures should emphasize avoidance and reduction of Project impacts. For unavoidable impacts, on-site habitat restoration or enhancement should be discussed in detail. If on-site mitigation is not feasible or would not be biologically viable and therefore not adequately mitigate the loss of biological functions and values, off-site mitigation through habitat creation and/or acquisition

and preservation in perpetuity should be addressed. Areas proposed as mitigation lands should be protected in perpetuity with a conservation easement, financial assurance and dedicated to a qualified entity for long-term management and monitoring. Under Government Code section 65967, the lead agency must exercise due diligence in reviewing the qualifications of a governmental entity, special district, or nonprofit organization to effectively manage and steward land, water, or natural resources on mitigation lands it approves.

5) Long-term Management of Mitigation Lands. For proposed preservation and/or restoration, the DEIR should include measures to protect the targeted habitat values from direct and indirect negative impacts in perpetuity. The objective should be to offset the Project-induced qualitative and quantitative losses of wildlife habitat values. Issues that should be addressed include (but are not limited to) restrictions on access, proposed land dedications, monitoring and management programs, control of illegal dumping, water pollution, and increased human intrusion. An appropriate non-wasting endowment should be set aside to provide for long-term management of mitigation lands.

6) Translocation/Salvage of Plants and Animal Species. Translocation and transplantation are the processes of moving an individual from the Project site and permanently moving it to a new location. CDFW generally does not support the use of, translocation or transplantation as the primary mitigation strategy for unavoidable impacts to rare, threatened, or endangered plant or animal species. Studies have shown that these efforts are experimental and the outcome unreliable. CDFW has found that permanent preservation and management of habitat capable of supporting these species is often a more effective long-term strategy for conserving sensitive plants and animals and their habitats.

7) Moving out of Harm's Way. The proposed Project is anticipated to result in impacting natural habitats on and/or adjacent to the Project site that may support species of indigenous wildlife. To avoid direct mortality, we recommend that a qualified biological monitor approved by CDFW be on-site prior to and during ground and habitat disturbing activities to move out of harm's way special status species or other wildlife of low mobility that would be injured or killed by grubbing or Project-related construction activities. It should be noted that the temporary relocation of on-site wildlife does not constitute effective mitigation for the purposes of offsetting Project impacts associated with habitat loss. If the Project requires species to be removed, disturbed, or otherwise handled, we recommend that the DEIR clearly identify that the designated entity shall obtain all appropriate state and federal permits.

CONCLUSION

CDFW appreciates the opportunity to comment on the NOP to assist the City of Irwindale in identifying and mitigating Project impacts on biological resources. If you have any questions or comments regarding this letter, please contact Felicia Silva, Environmental Scientist, at (562) 430-0098 or by email at Felicia.Silva@wildlife.ca.gov.

Sincerely,

Erinn Wilson
Environmental Program Manager I

ec: CDFW
Erinn Wilson – Los Alamitos
Victoria Tang – Los Alamitos
Andrew Valand – Los Alamitos
Felicia Silva – Los Alamitos
Audrey Kelly – Los Alamitos
CEQA Program Coordinator – Sacramento

State Clearinghouse

References

Cowardin, Lewis M., et al. 1970. Classification of Wetlands and Deepwater Habitats of the United States. U.S. Department of the Interior, Fish and Wildlife Service.

Sawyer, J. O., Keeler-Wolf, T., and Evens J.M. 2008. A manual of California Vegetation, 2nd ed. ISBN 978-0-943460-49-9.

US Department of Agriculture Forest Service. 2014. Existing Vegetation South Coast, 2002-2010, v2 [ESRI File Geodatabase]. MeClellan, CA. Accessed June 2016.

5175 Vincent Avenue

Public Scoping Meeting Agenda

Thursday, February 20, 2020 - 6:00 PM

1. ***Registration Period:*** Attendees will sign in and give his/her name, association, address, and email. This information will be put on a mailing list for future mailings.

2. ***Format:*** Short Presentation and Open House

    a. Brief Presentation: 6:00-6:15pm - A brief presentation will be provided at the beginning of the meeting. The presentation will provide an overview of the project, the purpose of the meeting, and opportunities for community input/participation during the environmental review process.

    b. Open House: 6:15-7:00pm - Maps and information will be available. The intent is to provide you with an opportunity to review some materials, ask some questions, and provide some comments if desired.

3. ***Questions/Comments:*** De Novo Planning Group and City of Irwindale staff will accept questions and comments concerning the project and scope of the EIR. The intent is to record comments/concerns so they can be addressed within the Draft EIR.

Please write any comment or concern regarding this project in the space provided below.

Veronica Vanmaricke
4851 Sabre Lane
Irwindale, CA
vguzman94@hotmail.com

I'd like information on future meetings. Also, the meeting on 2/2/20 was never announced to the Irwindale Residents. Social Media like Twitter Instagram and FB should be utilized... we're in the year 2020!

I will write an email with specific concerns.

Thank you

5175 Vincent Avenue

Public Scoping Meeting Agenda

Thursday, February 20, 2020 - 6:00 PM

1. ***Registration Period:*** Attendees will sign in and give his/her name, association, address, and email. This information will be put on a mailing list for future mailings.

2. ***Format:*** Short Presentation and Open House

    a. Brief Presentation: 6:00-6:15pm - A brief presentation will be provided at the beginning of the meeting. The presentation will provide an overview of the project, the purpose of the meeting, and opportunities for community input/participation during the environmental review process.

    b. Open House: 6:15-7:00pm - Maps and information will be available. The intent is to provide you with an opportunity to review some materials, ask some questions, and provide some comments if desired.

3. ***Questions/Comments:*** De Novo Planning Group and City of Irwindale staff will accept questions and comments concerning the project and scope of the EIR. The intent is to record comments/concerns so they can be addressed within the Draft EIR.

Please write any comment or concern regarding this project in the space provided below.

TRAFFIC AND ASSOCIATED NOISE/POLLUTION IS MY MAIN CONCERN. NOT ONLY ON VINCENT, BUT ARROW, CYPRESS AND IRWINDALE AVE WILL ALL BE AFFECTED. THE EIR SHOULD CONSIDER ALL TRAFFIC CONCERNS FROM ALL POSSIBLE FREEWAY EXITS TO THE PROJECT.

VINCENT AVE HAS TO BE WIDE ENOUGH FOR THE POLICE DEPARTMENT TO CONDUCT COMMERCIAL ENFORCEMENT + WITHOUT BACKING UP TRAFFIC EVEN MORE.

NOTIFICATIONS OF ALL FUTURE MEETINGS AND HEARINGS should be MAILED TO EACH RESIDENCE, JUST LIKE WHEN WE RECEIVE THE BAND LINE UP FOR MUSIC AT THE PARK OR A PART-TIME RECREATION AIDE OPENING AT THE REC. DEPARTMENT,

DE NOVO PLANNING GROUP
1020 Suncast Lane, Suite 106 | EL DORADO HILLS, CA 95762
smcmurtry@denovoplanning.com | TEL 916 580 9818

RECEIVED

MAR 0 2 2020

CITY OF IRWINDALE
CITY CLERKS DEPT.

5175 Vincent Avenue

Public Scoping Meeting Agenda

Thursday, February 20, 2020 - 6:00 PM

1. ***Registration Period:*** Attendees will sign in and give his/her name, association, address, and email. This information will be put on a mailing list for future mailings.

2. ***Format:*** Short Presentation and Open House

   a. Brief Presentation: 6:00-6:15pm - A brief presentation will be provided at the beginning of the meeting. The presentation will provide an overview of the project, the purpose of the meeting, and opportunities for community input/participation during the environmental review process.

   b. Open House: 6:15-7:00pm - Maps and information will be available. The intent is to provide you with an opportunity to review some materials, ask some questions, and provide some comments if desired.

3. ***Questions/Comments:*** De Novo Planning Group and City of Irwindale staff will accept questions and comments concerning the project and scope of the EIR. The intent is to record comments/concerns so they can be addressed within the Draft EIR.

Please write any comment or concern regarding this project in the space provided below.

Should this project be approved, and run at capacity, my property will be subjected to noise, diesel fumes, traffic problems. The backup sirens on tractor trucks are very loud. One warehouse design has approximately 125 bays to back into for these vehicles. Can you imagine the combined siren and diesel engine noise should this project run at capacity?? This noise, as proposed, would be ongoing 24/7! The amount of trucks idling like that would pollute the air. The prevailing westerly wind would carry the pollution to my property. With the substantial increase in truck traffic, the residents of Vincent County area have only two points to enter and exit, one of which is Chadmont Street. Currently there can be enough cars backed up so I cannot exit my driveway in the morning. Should this project be enacted it would cause this problem to happen anytime.

We are already suffering the ill effects of thousands of trucks hauling dirt to fill the Manning Pit. We suffer from chronic coughs and headaches which a doctor has said could be attributed from the project.

DE NOVO PLANNING GROUP
1020 Suncast Lane, Suite 106 | EL DORADO HILLS, CA 95762
smcmurtry@denovoplanning.com | TEL 916 580 9818

over →

Due to the ongoing drought, we are unable to keep both the inside and outside of our home clean. The dirt continues to clog our pool filter and equipment. Would you want to live like this?

We were told that the economic consequence of this project was not a factor. However, talking to a realtor we find that this project could potentially decrease our property value exponentially. This should be taken into account because this is where we live, this IS our environment.

Edward & Margaret Curren
16508 E. Chadmont Street
Covina, Ca. 91722-1011

626-332-5067 (Home)

CITY OF IRWINDALE
COMMUNITY DEVELOPMENT
MAR 10 2020
RECEIVED

5175 Vincent Avenue
Public Scoping Meeting Agenda
Thursday, February 20, 2020 - 6:00 PM

1. ***Registration Period:*** Attendees will sign in and give his/her name, association, address, and email. This information will be put on a mailing list for future mailings.

2. ***Format:*** Short Presentation and Open House

   a. Brief Presentation: 6:00-6:15pm - A brief presentation will be provided at the beginning of the meeting. The presentation will provide an overview of the project, the purpose of the meeting, and opportunities for community input/participation during the environmental review process.

   b. Open House: 6:15-7:00pm - Maps and information will be available. The intent is to provide you with an opportunity to review some materials, ask some questions, and provide some comments if desired.

3. ***Questions/Comments:*** De Novo Planning Group and City of Irwindale staff will accept questions and comments concerning the project and scope of the EIR. The intent is to record comments/concerns so they can be addressed within the Draft EIR.

Please write any comment or concern regarding this project in the space provided below.

To: Brandi Jones, Senior Planner.

All questions are on the attached sheets.

Thank You.

* I expect all my questions to be answer in writing in the next meeting.

DE NOVO PLANNING GROUP
1020 Suncast Lane, Suite 106 | EL DORADO HILLS, CA 95762
smcmurtry@denovoplanning.com | TEL 916 580 9818

March 9, 2020

To: Brandi Jones, Senior Planner

These are the questions and commons concerning the Notice of Scoping Meeting and Preparation of a Draft Environmental Impact Report on February 10, 2020 on the numerous bay trucking company on Vincent Avenue.

1. We noticed that the following agencies were listed as "may be required" to issue a permit: Regional Water Quality Control Board (RWQCB), Storm Water Pollution Prevention Plan (SWPPP), and South Coast Air Quality Management District (SCAQMD). These need to be a "Must" not a "may be". There are three cities in this county that is within the 500 feet parameter of this site: Irwindale, Azusa, and Covina.
2. Why were the above mentioned agencies not at the meeting?
3. Did the SCAQMD okay the project?
4. Who on the governing board of SCAQMD okayed the project?
5. Do you have a SCAQMD permit?
6. Who is going to monitor the air standard emissions of these areas?
    - Residential area east (Covina) and west (Irwindale)
    - Ellington Elementary (Covina)
    - Irwindale Community Park
7. Can you mandate non-polluting trucks to be used?
8. Is there going to be to be charging stations on site for electric vehicles?
9. Because this is a new facility, solar panels should be required to reduce the load off of the grid. All new houses are required to have solar panels, this is a new building, and it should have it to.
10. What are the working operations of this facility? 24/7, 9 to 5?
11. As residents living within 500 feet of the new trucking company, we request the working operations to be limited.
12. We were told in the meeting on February 20th 2020 that our property value will increase with the new trucking company that is being built within 500 feet to our front door. Can you show us where this has happened before and what percentage of increase are we planning to see?
13. Because we are live in Covina incorporated county of Los Angeles and the new trucking facility project is planning to be built on Irwindales side of Vincent Avenue in Los Angeles County, has Los Angeles County Department of Public Works Building and Safely been notified or participating in this study?
14. Is the County Supervisor of Los Angeles District 1, Hilda Solis, been notified or participating in this study?
15. Who in Los Angeles County Traffic and Road Division is going to inspect and okay the extra traffic on Vincent Avenue when the new trucking company beings operation?
16. Who is going to daily clean Vincent Avenue of dust, dirt, and debris?

Thank you,

James Trenkamp

Trenkamp@hotmail.com

626-587-6201

Charlotte Santos

Charwebb1@mac.com

626-290-5149

NAME/ASSOCIATION	ADDRESS	PHONE	EMAIL
Isabel & Jose Marín (Residents)	16148 Central St Irwindale CA 91706	626-852-5636	themarinconnect@gmail.com
Roy an Rodriguez	5107 Allen Dr Irwindale, Ca. 91706	(626) 324-4325	r_rodriguez_07@yahoo.com
Rudy Rodriguez	16058 Central St	(626) 833-7615	
Tony Moreno	5121 ½ Allen Dr.	626-641-5983	ynotm2007@gmail.com
Gary Strobehn	5121 Allen Dr	6266430625 2	Ststrobehn@gmail.com

NAME/ASSOCIATION	ADDRESS	PHONE	EMAIL
Beatriz Robles	16503 E. Chadmont St.	(626) 6175436.	
Veronica Vanmarcke			
Jenny + Becky			
Olivia M. Hernandez	4809 Calle Del Sur Irw.	(626) 664-6142	omireles.hdz1@gmail.com
Gary Strobehn	5121 Allen Dr.	626 430 6252	gtstrobehn@gmail.com
Cynthia Rodriguez	5121 Allen Dr. Irwindale	626 430 6252	Garyeric24@gmail.
Larry Borrola	4924 Sabrehan. Irwindale	—	—

De Novo Planning Group

A Land Use Planning, Design, and Environmental Firm

Name/Association	Address	Phone	Email
RICHARD HIRSCH	16014 PEPPERTREE LANE. IRWINDALE 91706	CELL 562-544-4404	rh4usc@MSN.COM
DIANA DIAZ	16121 PEPPERTREE IRWINDALE 91706	510 292-5771	
Maria Rodriguez	16058 Calle De Paseo Irwindale Ca 91706	626 373-3013	mrsshortie47@gmail.com

NAME/ASSOCIATION	ADDRESS	PHONE	EMAIL
Sam Reynolds	16604 E. Chadmont St.	(626) 332-6530	
LINDA STROBEL	512 N. Alley Dr	6269605898	
GARY STROBEL	4833 calle Dolson		
Camille Diaz	16121 Peppertree Ln	626 337259/	
Robert Diaz	2408 S Mountain Ave	626 359-5517	
Fred Barbosa	16169 Calle de Paseo	(626) 222-7815	fred.barbosa@hotmail.com

NAME/ASSOCIATION	ADDRESS	PHONE	EMAIL
Charlotte Santos	5148 Cranley Covina CA.	626-967-7863	
Fred Barbosa	16569 Calle de Rosa	(626) 222-7815	
Lydia Bravo	5056 N. Vincent Ave	626) 824-9415	
Marilyn Simpson	5050 Irwindale Ave	626 430-2209	
Esther Tapia	16109 Central St.	626 483-6865	
STEVE HAGER	16515 Chadront	626 979-4129	
Jorge Robles	16503. Chadwont St.	(626) 8063262	

5175 Vincent Avenue

Public Scoping Meeting Sign-In Sheet

Thursday, February 20, 2020 - 6:00 PM

Name/Association	Address	Phone	Email
Robert T. Escovedo SR	5253 N. Morada St	626-905-4145	
Edward Curren	16508 E. Chadmont St.	626 332-5067	
Dena Zepeda	4658 Frijo	626 6228953	
Richard Chico	16134 Calle De Pase	909 322 4800	
Bill Quisenberry	4399 N. Santa Anita El Monte	626-374-7140	
Jim Trenkamp	5148 Crawley	626-967-7863	

GABRIELENO BAND OF MISSION INDIANS - KIZH NATION
Historically known as The San Gabriel Band of Mission Indians
recognized by the State of California as the aboriginal tribe of the Los Angeles basin

Project Name: 5175 Vincent Avenue Project located at 5175 Vicente Avenue, Irwindale, CA 91706

Dear Brandi Jones,

Thank you for your letter dated February 10, 2020 regarding AB52 consultation. The above proposed project location is within our Ancestral Tribal Territory; therefore, our Tribal Government requests to schedule a consultation with you as the lead agency, to discuss the project and the surrounding location in further detail.

Please contact us at your earliest convenience. ***Please Note:AB 52, "consultation" shall have the same meaning as provided in SB 18 (Govt. Code Section 65352.4).***

Thank you for your time,

Andrew Salas, Chairman
Gabrieleno Band of Mission Indians – Kizh Nation
1(844)390-0787

Andrew Salas, Chairman | Nadine Salas, Vice-Chairman | Dr. Christina Swindall Martinez, secretary
Albert Perez, treasurer I | Martha Gonzalez Lemos, treasurer II | Richard Gradias, Chairman of the council of Elders

SANITATION DISTRICTS OF LOS ANGELES COUNTY

Converting Waste Into Resources

Robert C. Ferrante
Chief Engineer and General Manager
1955 Workman Mill Road, Whittier, CA 90601-1400
Mailing Address: P.O. Box 4998, Whittier, CA 90607-4998
(562) 699-7411 • www.lacsd.org

March 11, 2020

Ref. DOC 5565799

Ms. Brandi Jones, Senior Planner
Community Development Department
City of Irwindale
5050 North Irwindale Avenue
Irwindale, CA 91706

Dear Ms. Jones:

NOP Response for 5175 Vincent Avenue Project

The Los Angeles County Sanitation Districts (Districts) received a Notice of Preparation of a Draft Environmental Impact Report (NOP) for the subject project on February 12, 2020. The proposed project is located within the jurisdictional boundary of District No. 22. We offer the following comments regarding sewerage service:

1. The wastewater flow originating from the proposed project will discharge directly to the Districts' Joint Outfall H Unit 8K Relief Trunk Sewer, located in Vincent Avenue at the east side of the project site. The Districts' 21–inch diameter trunk sewer has a capacity of 9.9 million gallons per day (mgd) and conveyed a peak flow of 4.8 mgd when last measured in 2015. A 6-inch diameter or smaller direct connection to a Districts' trunk sewer requires a Trunk Sewer Connection Permit, issued by the Districts. An 8-inch diameter or larger direct connection to a Districts' trunk sewer requires submittal of Sewer Plans for review and approval by the Districts. For additional information, please contact the Districts' Engineering Counter at (562) 908-4288, extension 1205.

2. The wastewater generated by the proposed project will be treated at the San Jose Creek Water Reclamation Plant (WRP) located adjacent to the City of Industry, which has a capacity of 100 mgd and currently processes an average flow of 58.5 mgd. All biosolids and wastewater flows that exceed the capacity of the San Jose Creek WRP are diverted to and treated at the Joint Water Pollution Control Plant in the City of Carson.

3. The expected average wastewater flow from the project site, described in the notice as a 545,735 square-foot high-cube industrial warehouse, is 13,643 gallons per day. For a copy of the Districts' average wastewater generation factors, go to www.lacsd.org, under Services, then Wastewater Program and Permits, select Will Serve Program, and scroll down to click on the Table 1, Loadings for Each Class of Land Use link.

4. The Districts are empowered by the California Health and Safety Code to charge a fee for the privilege of connecting (directly or indirectly) to the Districts' Sewerage System for increasing the strength or quantity of wastewater discharged from connected facilities. This connection fee is a

Printed on Recycled Paper

capital facilities fee that is imposed in an amount sufficient to construct an incremental expansion of the Sewerage System to accommodate the proposed project. Payment of a connection fee will be required before this project is permitted to discharge to the Districts' Sewerage System. For more information and a copy of the Connection Fee Information Sheet, go to www.lacsd.org, under Services, then Wastewater (Sewage) and select Rates & Fees. In determining the impact to the Sewerage System and applicable connection fees, the Districts will determine the user category (e.g. Condominium, Single Family home, etc.) that best represents the actual or anticipated use of the parcel(s) or facilities on the parcel(s) in the development. For more specific information regarding the connection fee application procedure and fees, the developer should contact the Districts' Wastewater Fee Public Counter at (562) 908-4288, extension 2727.

5. In order for the District to conform to the requirements of the Federal Clean Air Act (CAA), the capacities of District wastewater treatment facilities are based on the regional growth forecast adopted by the Southern California Association of Governments (SCAG). Specific policies included in the development of the SCAG regional growth forecast are incorporated into clean air plans, which are prepared by the South Coast and Antelope Valley Air Quality Management Districts in order to improve air quality in the South Coast and Mojave Desert Air Basins as mandated by the CCA. All expansions of District facilities must be sized and service phased in a manner that will be consistent with the SCAG regional growth forecast for the counties of Los Angeles, Orange, San Bernardino, Riverside, Ventura, and Imperial. The available capacity of District treatment facilities will, therefore, be limited to levels associated with the approved growth identified by SCAG. As such, this letter does not constitute a guarantee of wastewater service, but is to advise the developer that the District intends to provide this service up to the levels that are legally permitted and to inform the developer of the currently existing capacity and any proposed expansion of District facilities.

If you have any questions, please contact the undersigned at (562) 908-4288, extension 2717.

Very truly yours,

Adriana Raza
Customer Service Specialist
Facilities Planning Department

AR:ar

cc: A. Schmidt
A. Howard

South Coast
Air Quality Management District
21865 Copley Drive, Diamond Bar, CA 91765-4178
(909) 396-2000 • www.aqmd.gov

SENT VIA USPS AND E-MAIL: March 10, 2020

BJones@IrwindaleCA.Gov
Brandi Jones, Senior Planner
City of Irwindale, Community Development Department
Planning Division
5050 North Irwindale Avenue
Irwindale, CA 91706

Notice of Preparation of a Draft Environmental Impact Report for the Proposed 5175 Vincent Avenue Project[1]

South Coast Air Quality Management District (South Coast AQMD) staff appreciates the opportunity to comment on the above-mentioned document. South Coast AQMD staff's comments are recommendations regarding the analysis of potential air quality impacts from the Proposed Project that should be included in the Draft Environmental Impact Report (EIR). Please send South Coast AQMD a copy of the Draft EIR upon its completion and public release. Note that copies of the Draft EIR that are submitted to the State Clearinghouse are not forwarded to South Coast AQMD. Please forward a copy of the Draft EIR directly to South Coast AQMD at the address shown in the letterhead. **In addition, please send with the Draft EIR all appendices or technical documents related to the air quality, health risk, and greenhouse gas analyses and electronic versions of all air quality modeling and health risk assessment files[2]. These include emission calculation spreadsheets and modeling input and output files (not PDF files). Without all files and supporting documentation, South Coast AQMD staff will be unable to complete our review of the air quality analyses in a timely manner. Any delays in providing all supporting documentation will require additional time for review beyond the end of the comment period.**

Air Quality Analysis

South Coast AQMD adopted its California Environmental Quality Act (CEQA) Air Quality Handbook in 1993 to assist other public agencies with the preparation of air quality analyses. South Coast AQMD recommends that the Lead Agency use this Handbook as guidance when preparing its air quality analysis. Copies of the Handbook are available from South Coast AQMD's Subscription Services Department by calling (909) 396-3720. More guidance developed since this Handbook is also available on South Coast AQMD's website at: http://www.aqmd.gov/home/regulations/ceqa/air-quality-analysis-handbook/ceqa-air-quality-handbook-(1993). South Coast AQMD staff also recommends that the Lead Agency use the CalEEMod land use emissions software. This software has recently been updated to incorporate up-to-date state and locally approved emission factors and methodologies for estimating pollutant emissions from typical land use development. CalEEMod is the only software model maintained by the California Air Pollution Control Officers Association (CAPCOA) and replaces the now outdated URBEMIS. This model is available free of charge at: www.caleemod.com.

[1] The Proposed Project consists of construction of a 545,735-square-foot warehouse on 26.05 acres.

[2] Pursuant to the CEQA Guidelines Section 15174, the information contained in an EIR shall include summarized technical data, maps, plot plans, diagrams, and similar relevant information sufficient to permit full assessment of significant environmental impacts by reviewing agencies and members of the public. Placement of highly technical and specialized analysis and data in the body of an EIR should be avoided through inclusion of supporting information and analyses as appendices to the main body of the EIR. Appendices to the EIR may be prepared in volumes separate from the basic EIR document, but shall be readily available for public examination and shall be submitted to all clearinghouses which assist in public review.

South Coast AQMD has also developed both regional and localized significance thresholds. South Coast AQMD staff requests that the Lead Agency quantify criteria pollutant emissions and compare the results to South Coast AQMD's CEQA regional pollutant emissions significance thresholds to determine air quality impacts. South Coast AQMD's CEQA regional pollutant emissions significance thresholds can be found here: http://www.aqmd.gov/docs/default-source/ceqa/handbook/scaqmd-air-quality-significance-thresholds.pdf. In addition to analyzing regional air quality impacts, South Coast AQMD staff recommends calculating localized air quality impacts and comparing the results to localized significance thresholds (LSTs). LSTs can be used in addition to the recommended regional significance thresholds as a second indication of air quality impacts when preparing a CEQA document. Therefore, when preparing the air quality analysis for the Proposed Project, it is recommended that the Lead Agency perform a localized analysis by either using the LSTs developed by South Coast AQMD staff or performing dispersion modeling as necessary. Guidance for performing a localized air quality analysis can be found at: http://www.aqmd.gov/home/regulations/ceqa/air-quality-analysis-handbook/localized-significance-thresholds.

The Lead Agency should identify any potential adverse air quality impacts that could occur from all phases of the Proposed Project and all air pollutant sources related to the Proposed Project. Air quality impacts from both construction (including demolition, if any) and operations should be calculated. Construction-related air quality impacts typically include, but are not limited to, emissions from the use of heavy-duty equipment from grading, earth-loading/unloading, paving, architectural coatings, off-road mobile sources (e.g., heavy-duty construction equipment) and on-road mobile sources (e.g., construction worker vehicle trips, material transport trips). Operation-related air quality impacts may include, but are not limited to, emissions from stationary sources (e.g., boilers), area sources (e.g., solvents and coatings), and vehicular trips (e.g., on- and off-road tailpipe emissions and entrained dust). Air quality impacts from indirect sources, such as sources that generate or attract vehicular trips, should be included in the analysis.

Operation of the Proposed Project generates or attracts heavy-duty diesel-fueled vehicles. It is recommended that the Lead Agency perform a mobile source health risk assessment. Guidance for performing a mobile source health risk assessment ("*Health Risk Assessment Guidance for Analyzing Cancer Risk from Mobile Source Diesel Idling Emissions for CEQA Air Quality Analysis*") can be found at: http://www.aqmd.gov/home/regulations/ceqa/air-quality-analysis-handbook/mobile-source-toxics-analysis. An analysis of all toxic air contaminant impacts due to the use of equipment potentially generating such air pollutants should also be included.

In addition, guidance on siting incompatible land uses (such as placing homes near freeways) can be found in the California Air Resources Board's *Air Quality and Land Use Handbook: A Community Health Perspective*, which can be found at: http://www.arb.ca.gov/ch/handbook.pdf. CARB's Land Use Handbook is a general reference guide for evaluating and reducing air pollution impacts associated with new projects that go through the land use decision-making process. Guidance[3] on strategies to reduce air pollution exposure near high-volume roadways can be found at: https://www.arb.ca.gov/ch/rd_technical_advisory_final.PDF.

South Coast AQMD staff is concerned about potential public health impacts of siting warehouses within close proximity of sensitive land uses, especially in communities that are already heavily affected by the existing warehouse and truck activities. The South Coast AQMD's Multiple Air Toxics Exposure Study

[3] In April 2017, CARB published a technical advisory, *Strategies to Reduce Air Pollution Exposure Near High-Volume Roadways: Technical Advisory*, to supplement CARB's Air Quality and Land Use Handbook: A Community Health Perspective. This technical advisory is intended to provide information on strategies to reduce exposures to traffic emissions near high-volume roadways to assist land use planning and decision-making in order to protect public health and promote equity and environmental justice. The technical advisory is available at: https://www.arb.ca.gov/ch/landuse.htm.

(MATES IV), completed in May 2015, concluded that the largest contributor to cancer risk from air pollution is diesel particulate matter (DPM) emissions, and that the Los Angeles County has the greatest cancer risk at 415 in one million, and individual communities could have higher risks than the average if they are located near emission sources[4]. Operation of warehouses generates and attracts heavy-duty diesel-fueled trucks that emit DPM. When the health impacts from the Proposed Project are added to those existing impacts, residents living in the communities surrounding the Proposed Project will possibly face an even greater exposure to air pollution and bear a disproportionate burden of increasing health risks. Thus, cumulative impacts from warehouse projects in communities with existing industrial sources should be evaluated and disclosed.

Trip Rates for High Cube Warehouse Projects

The Proposed Project will include, among others, construction of a 545,735-square-foot warehouse on 26.05 acres. South Coast AQMD staff recommends the use of truck trip rates from the Institute of Transportation Engineers (ITE) for high cube warehouse projects located in South Coast AQMD (i.e. 1.68 average daily vehicle trips per 1,000 square feet and 0.64 average daily truck trips per 1,000 square feet). Consistent with CEQA Guidelines, the Draft EIR for the Proposed Project may use a non-default trip rate if there is substantial evidence supporting another rate is more appropriate for the air quality analysis.

Mitigation Measures

In the event that the Proposed Project generates significant adverse air quality impacts, CEQA requires that all feasible mitigation measures that go beyond what is required by law be utilized during project construction and operation to minimize these impacts. Pursuant to CEQA Guidelines Section 15126.4 (a)(1)(D), any impacts resulting from mitigation measures must also be discussed. Several resources are available to assist the Lead Agency with identifying potential mitigation measures for the Proposed Project, including:

- Chapter 11 "Mitigating the Impact of a Project" of South Coast AQMD'S *CEQA Air Quality Handbook.* South Coast AQMD's CEQA web pages available here: http://www.aqmd.gov/home/regulations/ceqa/air-quality-analysis-handbook/mitigation-measures-and-control-efficiencies
- South Coast AQMD's Rule 403 – Fugitive Dust, and the Implementation Handbook for controlling construction-related emissions and Rule 1403 – Asbestos Emissions from Demolition/Renovation Activities
- South Coast AQMD's Mitigation Monitoring and Reporting Plan (MMRP) for the 2016 Air Quality Management Plan (2016 AQMP) available here (starting on page 86): http://www.aqmd.gov/docs/default-source/Agendas/Governing-Board/2017/2017-mar3-035.pdf
- California Air Pollution Control Officers Association (CAPCOA)'s *Quantifying Greenhouse Gas Mitigation Measures* available here: http://www.capcoa.org/wp-content/uploads/2010/11/CAPCOA-Quantification-Report-9-14-Final.pdf

Additional mitigation measures for operational air quality impacts from mobile sources that the Lead Agency should consider in the Draft EIR may include the following:

- Require zero-emissions or near-zero emission on-road haul trucks such as heavy-duty trucks with natural gas engines that meet the CARB's adopted optional NOx emissions standard at 0.02 grams per brake horsepower-hour (g/bhp-hr), if and when feasible. At a minimum, require that

[4] South Coast AQMD. May 2015. *Multiple Air Toxics Exposure Study in the South Coast Air Basin*. Accessed at: http://www.aqmd.gov/docs/default-source/air-quality/air-toxic-studies/mates-iv/mates-iv-final-draft-report-4-1-15.pdf.

vendors, contractors, and/or haul truck operators commit to using 2010 model year[5] trucks (e.g., material delivery trucks and soil import/export) that meet CARB's 2010 engine emissions standards at 0.01 g/bhp-hr of particulate matter (PM) and 0.20 g/bhp-hr of NOx emissions or newer, cleaner trucks[6]. Include environmental analyses to evaluate and identify sufficient power available for zero emission trucks and supportive infrastructures in the Energy and Utilities and Service Systems Sections in the CEQA document, where appropriate. The Lead Agency should include the requirement of zero-emission or near-zero emission on-road haul trucks in applicable bid documents, purchase orders, and contracts. Operators shall maintain records of all trucks associated with project construction to document that each truck used meets these emission standards, and make the records available for inspection. The Lead Agency should conduct regular inspections to the maximum extent feasible to ensure compliance.

- Have truck routes clearly marked with trailblazer signs, so that trucks will not enter residential areas.
- Limit the daily number of trucks allowed at the Proposed Project to levels analyzed in the Final EIR. If higher daily truck volumes are anticipated to visit the site, the Lead Agency should commit to re-evaluating the Proposed Project through CEQA prior to allowing this land use or higher activity level.
- Should the Proposed Project generate significant regional emissions, the Lead Agency should require mitigation that requires accelerated phase-in for non-diesel powered trucks. For example, natural gas trucks, including Class 8 HHD trucks, are commercially available today. Natural gas trucks can provide a substantial reduction in health risks, and may be more financially feasible today due to reduced fuel costs compared to diesel. In the Final CEQA document, the Lead Agency should require a phase-in schedule for these cleaner operating trucks to reduce any significant adverse air quality impacts. South Coast AQMD staff is available to discuss the availability of current and upcoming truck technologies and incentive programs with the Lead Agency.
- Provide electric vehicle (EV) Charging Stations (see the discussion below regarding EV charging stations).
- Trucks that can operate at least partially on electricity have the ability to substantially reduce the significant NOx impacts from this project. Further, trucks that run at least partially on electricity are projected to become available during the life of the project as discussed in the 2016-2040 Regional Transportation Plan/Sustainable Communities Strategy (2016-2040 RTP/SCS)[7]. It is important to make this electrical infrastructure available when the project is built so that it is ready when this technology becomes commercially available. The cost of installing electrical charging equipment onsite is significantly cheaper if completed when the project is built compared to retrofitting an existing building. Therefore, South Coast AQMD staff recommends the Lead Agency require the Proposed Project and other plan areas that allow truck parking to be constructed with the appropriate infrastructure to facilitate sufficient electric charging for trucks to plug-in. Similar to the City of Los Angeles requirements for all new projects, South Coast AQMD staff recommends that the Lead Agency require at least 5% of all vehicle parking spaces

[5] The CARB adopted the statewide Truck and Bus Regulation in 2010. The Regulation requires diesel trucks and buses that operate in California to be upgraded to reduce emissions. Newer heavier trucks and buses must meet particulate matter filter requirements beginning January 1, 2012. Lighter and older heavier trucks must be replaced starting January 1, 2015. By January 1, 2023, nearly all trucks and buses will need to have 2010 model year engines or equivalent. More information on the CARB's Truck and Bus Regulation is available at: https://www.arb.ca.gov/msprog/onrdiesel/onrdiesel.htm.

[6] Based on a review of the California Air Resources Board's diesel truck regulations, 2010 model year diesel haul trucks should have already been available and can be obtained in a successful manner for the project construction California Air Resources Board. March 2016. Available at: http://www.truckload.org/tca/files/ccLibraryFiles/Filename/000000003422/California-Clean-Truck-and-Trailer-Update.pdf (See slide #23).

[7] Southern California Association of Governments. Accessed at: http://scagrtpscs.net/Pages/FINAL2016RTPSCS.aspx.

(including for trucks) include EV charging stations[8]. Further, electrical hookups should be provided at the onsite truck stop for truckers to plug in any onboard auxiliary equipment. At a minimum, electrical panels should be appropriately sized to allow for future expanded use.

- Design the Proposed Project such that entrances and exits are such that trucks are not traversing past neighbors or other sensitive receptors.
- Design the Proposed Project such that any check-in point for trucks is well inside the Proposed Project site to ensure that there are no trucks queuing outside of the facility.
- Design the Proposed Project to ensure that truck traffic within the Proposed Project site is located away from the property line(s) closest to nearby sensitive receptor neighbors.
- Restrict overnight parking in residential areas.
- Establish overnight parking within the Proposed Project where trucks can rest overnight.
- Establish area(s) within the Proposed Project site for repair needs.
- Develop, adopt and enforce truck routes both in and out of city, and in and out of facilities.
- Create a buffer zone of at least 300 meters (roughly 1,000 feet), which can be office space, employee parking, greenbelt, etc. between the Proposed Project and sensitive receptors.

Additional mitigation measures for operational air quality impacts from area sources that the Lead Agency should consider in the Draft EIR may include the following:

- Maximize use of solar energy including solar panels.
- Install the maximum possible number of solar energy arrays on the building roofs and/or on the project site to generate solar energy for the facility and/or to power EV charging stations.
- Maximize the planting of trees in landscaping and parking lots.
- Use light colored paving and roofing materials.
- Utilize only Energy Star heating, cooling, and lighting devices, and appliances.
- Require use of electric or alternatively fueled sweepers with HEPA filters.
- Use of water-based or low VOC cleaning products that go beyond the requirements of South Coast AQMD Rule 1113.

Alternative

In the event that the Proposed Project generates significant adverse air quality impacts, CEQA requires the consideration and discussion of alternatives to the project or its location which are capable of avoiding or substantially lessening any of the significant effects of the project. The discussion of a reasonable range of potentially feasible alternatives, including a "no project" alternative, is intended to foster informed decision-making and public participation. Pursuant to CEQA Guidelines Section 15126.6(d), the Draft EIR shall include sufficient information about each alternative to allow meaningful evaluation, analysis, and comparison with the Proposed Project.

Permits and South Coast AQMD Rules

In the event that implementation of the Proposed Project requires a permit from South Coast AQMD, South Coast AQMD should be identified as a Responsible Agency for the Proposed Project. The assumptions in the air quality analysis in the certified Final EIR will be the basis for permit conditions and limits. For more information on permits, please visit South Coast AQMD's webpage at: http://www.aqmd.gov/home/permits. Questions on permits can be directed to South Coast AQMD's Engineering and Permitting staff at (909) 396-3385.

[8] City of Los Angeles. Accessed at: http://ladbs.org/LADBSWeb/LADBS_Forms/Publications/LAGreenBuildingCodeOrdinance.pdf.

Data Sources

South Coast AQMD rules and relevant air quality reports and data are available by calling South Coast AQMD's Public Information Center at (909) 396-2001. Much of the information available through the Public Information Center is also available at South Coast AQMD's webpage at: http://www.aqmd.gov.

South Coast AQMD staff is available to work with the Lead Agency to ensure that project air quality and health risk impacts are accurately evaluated and mitigated where feasible. If you have any questions regarding this letter, please contact me at lsun@aqmd.gov.

Sincerely,

Lijin Sun

Lijin Sun, J.D.
Program Supervisor, CEQA IGR
Planning, Rule Development & Area Sources

LS
LAC200304-08
Control Number

Appendix B

Air Quality, Greenhouse Gas, and Energy Appendices

APPENDIX B –AIR QUALITY, GREENHOUSES GASES, & ENERGY MODELING

Appendix Contents

1. Analysis of Models and Tools for Correlating Project-Generated Emissions to Health End Points
2. CalEEMod Modeling Results
3. Energy Consumption Estimates
4. Air Toxics Health Risk Assessment

This page left intentionally blank

APPENDIX B.1

Analysis of Models and Tools for Correlating Project-Generated Emissions to Health End Points

APPENDIX B

Appendix B of the Draft EIR includes additional information regarding models and tools for correlating project-generated criteria pollutant emissions to health end points. The following table is an addition to Appendix B.

ANALYSIS OF MODELS AND TOOLS TO CORRELATE PROJECT-GENERATED CRITERIA POLLUTANT EMISSIONS TO HEALTH END POINTS

TOOL	CREATED BY	DESCRIPTION	RESOLUTION	POLLUTANTS ANALYZED	PROJECT-LEVEL CEQA APPLICABILITY
AERMOD Modeling System[1,2]	AERMIC	A steady-state plume model that incorporates air dispersion based on planetary boundary layer turbulence structure and scaling concepts, including treatment of both surface and elevated sources, and both simple and complex terrain. The modeling system incorporates air dispersion based on a planetary boundary layer turbulence structure and scaling concepts, including treatment of both surface and elevated sources, and both simple and complex terrain.	Project-level	SO_2, ROG, NO_2, Lead, $PM_{2.5}$, PM_{10}, NH_3	This model operates at the project-level and provides air dispersion modeling for a project's emissions on the surrounding environment. However, even with supplementary (i.e. additional software), the model cannot estimate specific health effects on receptors from the air dispersion modeling. Moreover, it cannot model the (complex) chemical reactions that occur between the ozone precursors (e.g. NOx and ROG) that generate ozone. Therefore, this model is not recommended for project-level CEQA analysis.
AirCounts[3]	Abt Assoc.	Online tool that helps large and medium-sized cities quickly estimate the health benefits of $PM_{2.5}$ emission reductions and economic value of those benefits. The tool estimates the number of deaths (mortality) avoided and economic value related to user-specified regional, annual $PM_{2.5}$ emissions reduction.	City-level	Primary $PM_{2.5}$	This tool is only illustrative, as it is limited to certain cities and does not target specific sectors. The tool is not sector specific, and includes limited California data. It cannot provide results at a project-level. Therefore, the tool is not recommended for project-level CEQA analysis.
Air Pollution Emission Experiments and Policy analysis (APEEP) model[4]	Mueller and Mendelsohn2006, 2009	The Air Pollution Emission Experiments and Policy (APEEP) analysis model (Muller and Mendelsohn 2006, 2009) is a traditional integrated assessment model. Like other integrated assessment models, APEEP connects emissions of air pollution through air-quality modeling to exposures, physical effects, and monetary damages. Making these links requires the use of findings reported in the peer-reviewed literature across several scientific disciplines. The air-quality models in APEEP use the emission data provided by EPA to estimate corresponding ambient concentrations in each county in the coterminous states.	National or county-level	SO_2, ROG, NO_x, Ozone, $PM_{2.5}$, PM_{10}	The model operates at the national scale but may be applied at the county-level (although it is not clear how this adjustment should be made). It cannot provide results at a project-level. The tool is also not commercially available. Therefore, the tool is not recommended for project-level CEQA analysis.

[1] See: https://www.epa.gov/scram/air-quality-dispersion-modeling-preferred-and-recommended-models

[2] Note: May require additional software to estimate the level of each specific pollutant at the modeled receptors.

[3] See: https://www.abtassociates.com/tools

[4] See: https://public.tepper.cmu.edu/nmuller/APModel.aspx

TOOL	CREATED BY	DESCRIPTION	RESOLUTION	POLLUTANTS ANALYZED	PROJECT-LEVEL CEQA APPLICABILITY
CALINE3/ CAL3QHC/ CAL3QHCR[1, 2]	USEPA	A steady-state Gaussian dispersion model designed to determine air pollution concentrations at receptor locations downwind of highways located in relatively uncomplicated terrain. CALINE3 is incorporated into the more refined CAL3QHC and CAL3QHCR models. CAL3QHCR is a more refined version based on CAL3QHC that requires local meteorological data.	Project-level	SO_2, ROG, NO_2, Lead, $PM_{2.5}$, PM_{10}	This model operates at the project-level and provides air dispersion modeling for a project's emissions on the surrounding environment. However, even with supplementary (i.e. additional software), the model cannot estimate specific health effects on receptors from the air dispersion modeling. Moreover, it cannot model the (complex) chemical reactions that occur between the ozone precursors (e.g. NOx and ROG) that generate ozone. Therefore, this model is not recommended for project-level CEQA analysis.
Complex Terrain Dispersion Model Plus Algorithms for Unstable Situations (CTDMPLUS)[1, 2]	USEPA	A refined point source gaussian air quality model for use in all stability conditions for complex terrain. The purpose of the model is to provide a practical, refined plum model for elevated point sources near complex terrain.	Project-level	SO_2, ROG, NO_2, Lead, $PM_{2.5}$, PM_{10}	This model operates at the project-level and provides air dispersion modeling for a project's emissions on the surrounding environment. However, even with supplementary (i.e. additional software), the model cannot estimate specific health effects on receptors from the air dispersion modeling. Moreover, it cannot model the (complex) chemical reactions that occur between the ozone precursors (e.g. NOx and ROG) that generate ozone. Therefore, this model is not recommended for project-level CEQA analysis.
Co-Benefits Risk Assessment (COBRA)[5]	USEPA	Preliminary screening tool that contains baseline emission estimates of a variety of air pollutants for a single year. COBRA is targeted to state and local governments as a screening assessment for clean energy policies. EPA's CO–Benefits Risk Assessment (COBRA) screening model is a free tool that helps state and local governments: • Explore how changes in air pollution from clean energy policies and programs; • Estimate the economic value of the health benefits associated with clean energy policies and programs to compare against program costs; • Map and visually represent the air quality, human health, and health-related economic benefits from reductions in emissions of particulate matter ($PM_{2.5}$), sulfur dioxide ($S0_2$), nitrogen oxides (NO_X), ammonia (NH_3), and volatile organic compounds (VOCs) that result from clean energy policies and programs.	National, regional, state, or county-levels	$PM_{2.5}$, SO_2, NO_x, NH_3, and ROG	COBRA is a preliminary screening tool only and cannot be used at sub-county resolution. It cannot provide results at a project-level. It also does not account for secondary emission changes resulting from market responses. Accordingly, the tool is not recommended for project-level CEQA analysis.

[5] See: https://www.epa.gov/statelocalenergy/co-benefits-risk-assessment-cobra-health-impacts-screening-and-mapping-tool

TOOL	CREATED BY	DESCRIPTION	RESOLUTION	POLLUTANTS ANALYZED	PROJECT-LEVEL CEQA APPLICABILITY
Environmental Benefits and Mapping Program-Community Edition (BenMAP-CE)[6]	USEPA	The USEPA's detailed model for estimating the health impacts from air pollution. It relies on input concentrations and applies concentration-response (C-R) health impact functions, which relate a change in the concentration of a pollutant with a change in the incidence of a health endpoint, including premature mortality, heart attacks, chronic respiratory illnesses, asthma exacerbation and other adverse health effects. Detailed inputs are required for air quality changes (concentrations from AERMOD), population, baseline incidence rates, and effect estimates.	National, County, City, and sub-regional levels	Ozone, PM, NO_2, SO_2, CO	This tool is not well suited to analyze small or localized changes in pollutant concentrations associated with individual projects. Although this tool is under consideration by some California air districts for use towards project-level analysis, no air district in California has promulgated a methodology (using this tool or any other) that would correlate the expected air quality emissions of projects to the likely health consequences of the increased emissions. Accordingly, the tool is not recommended.
Fast Scenario Screening Tool (TM5-FASST)[7]	Joint Research Centre (Italy)	A tool that allows users to evaluate how air pollutant emissions affect large scale pollutant concentrations and their impact on human health (mortality and years of life lost) and crop yield from national to regional air quality policies, such as climate policies. The target policy domains are national to regional air quality policies, or air pollutant scenarios linked to other policy domains (e.g. climate policy). The tool is web-based and does not require coding or modelling. Users must gain access through publishers.	Global and national-levels	$PM_{2.5}$, Ozone, NO_x, NH_3, CO, ROG, CH_4, SO_2	This tool is applicable at national to global scales. It cannot provide results a project-level. Accordingly, the tool is not recommended for project-level CEQA analysis.
Long-range Energy Alternatives Planning System-Integrated Benefits Calculator (LEAP-IBC)[8]	Climate and Clean Air Coalition (CCAC)	A calculator that allows users to rapidly estimate the impacts of reducing emissions on health, climate, and agriculture. The tool uses sensitivity coefficients that link gridded emissions of air pollutants and precursors to health, climate and agricultural impacts at a national level. The tool is primarily used for policy analysis. The tool is currently Excel-based and is available through the developers only. A web-based interface is currently under development.	National-level	$PM_{2.5}$, Ozone, NO_2	This tool is applicable at national scale. Accordingly, the tool is not recommended for project-level CEQA analysis.
Methodology for Estimating Premature Deaths Associated with Long-Term Exposure to Fine Airborne Particulate Matter in California[9]	California Air Resources Board	The staff report identifies a relative risk of premature death associated with $PM_{2.5}$ exposure based on a review of all relevant scientific literature, and a new relative risk factor was developed. This new factor is a 10% increase in risk of premature death per 10 $\mu g/m^3$ increase in exposure to $PM_{2.5}$ concentrations (uncertainty interval: 3% to 20%)	National	$PM_{2.5}$	The primary author of the CARB staff report notes that the analysis method is not suited for small projects and may yield unreliable results due to various uncertainties. The tool also cannot provide results on a project-level. Accordingly, the tool is not recommended for project-level CEQA analysis.

[6] See: https://www.epa.gov/benmap

[7] See: http://tm5-fasst.jrc.ec.europa.eu/

[8] See: https://www.ccacoalition.org/en/resources/long-range-energy-alternatives-planning-integrated-benefits-calculator-leap-ibc-factsheet

[9] See: https://ww3.arb.ca.gov/research/health/pm-mort/pmmortalityreportfinalr10-24-08.pdf

Tool	Created by	Description	Resolution	Pollutants Analyzed	Project-level CEQA Applicability
Multi-Pollutant Evaluation Method (MPEM)[10]	BAAQMD	Estimates the impacts of control measures on pollutant concentration, population exposures, and health outcomes for criteria, toxic, and GHG pollutants. Monetizes the value of total health benefits from reductions in $PM_{2.5}$, ozone, and certain carcinogens, and the social value of GHG reductions. MPEM was designed for development of a Clean Air Plan for the San Francisco Bay Area. The inputs are specific to the SF region and are not appropriate for projects outside BAAQMD.	Regional level in the SFBAAB	Ozone, PM, air toxics, GHG	This tool is designed to support the BAAQMD in regional planning and emissions analysis within the San Francisco Bay Area Air Basin (SFBAAB). The model applies changes in pollutant concentrations over a four-square kilometer grid. The tool also cannot provide results on a project-level. Additionally, this tool is only applicable for the SFBAAB. Accordingly, the tool is not recommended for project-level CEQA analysis.
Offshore and Coastal Dispersion Model Version 5 (OCD)[1, 2]	USEPA	A straight-line Gaussian model developed to determine the impact of offshore emissions from point, area or line sources on the air quality of coastal regions. OCD incorporates overwater plume transport and dispersion as well as changes that occur as the plume crosses the shoreline. Hourly meteorological data are needed from both offshore and onshore locations.	Project-level	SO_2, ROG, NO_2, Lead, $PM_{2.5}$, PM_{10}	This model operates at the project-level and provides air dispersion modeling for a project's emissions on the surrounding environment. However, even with supplementary (i.e. additional software), the model cannot estimate specific health effects on receptors from the air dispersion modeling. Moreover, it cannot model the (complex) chemical reactions that occur between the ozone precursors (e.g. NOx and ROG) that generate ozone. Therefore, this model is not recommended for project-level CEQA analysis.
Response Surface Model (RSM)-based Benefit-per-Ton Estimates[11]	USEPA	Consists of tables reporting the monetized $PM_{2.5}$-related health benefits from reducing $PM_{2.5}$ precursors from certain source types nationally and for 9 US cities/regions. Applying these estimates simply involves multiplying the emissions reduction by the relevant benefit per-ton metric. The resulting value is the PM mortality risk estimate at a 3% discount rate.	National or regional (San Joaquin County only) levels	SOx, VOC, NH_3, NO_x	RSM includes regional values specific to San Joaquin County. The values are also dated. Accordingly, the tool is not recommended for project-level CEQA analysis.
Sector-based Benefit-per-Ton Estimates[12]	USEPA	Two specific sets of Benefit-per-ton (BPT) estimates for 17 key source categories are available. Both are a reduced-form approach based on BenMAP modeling. Applying these factors involves multiplying the emissions reduction (in tons) by the relevant benefit (economic value) or incidence (rates of mortality and morbidity) per-ton metric. The resulting value is the economics, mortality, and morbidity of direct and indirect $PM_{2.5}$ emissions.	National-scale	$PM_{2.5}$, SO_2, NO_x	The BPT estimates do not account for project-specific emissions or receptor locations, local dispersion characteristics, or regional photochemistry. The resultant health effects are therefore reflective of national averages and may not be accurate when applied to the project-level. Accordingly, the tool is not recommended for project-level CEQA analysis.

[10] See: http://www.baaqmd.gov/~/media/files/planning-and-research/plans/2017-clean-air-plan/mpem_nov_dec_2016-pdf.pdf?la=en

[11] See: https://www.epa.gov/benmap/response-surface-model-rsm-based-benefit-ton-estimates

[12] See: https://www.epa.gov/benmap/sector-based-pm25-benefit-ton-estimates. The updated Technical Support Document (February 2018) is available at: https://www.epa.gov/sites/production/files/2018-02/documents/sourceapportionmentbpttsd_2018.pdf

APPENDIX B.2

CalEEMod Modeling Results

Irwindale 5175 Vincent Avenue

Los Angeles-South Coast County, Annual

1.0 Project Characteristics

1.1 Land Usage

Land Uses	Size	Metric	Lot Acreage	Floor Surface Area	Population
General Light Industry	545.74	1000sqft	12.41	545,740.00	0
Parking Lot	11.05	Acre	11.05	481,338.00	0
City Park	2.59	Acre	2.59	112,820.40	0

1.2 Other Project Characteristics

Urbanization	Urban	**Wind Speed (m/s)**	2.2	**Precipitation Freq (Days)**	33
Climate Zone	9			**Operational Year**	2023
Utility Company	Southern California Edison				
CO2 Intensity (lb/MWhr)	531.75	**CH4 Intensity (lb/MWhr)**	0.029	**N2O Intensity (lb/MWhr)**	0.006

1.3 User Entered Comments & Non-Default Data

Irwindale 5175 Vincent Avenue - Los Angeles-South Coast County, Annual

Project Characteristics - Op. year - 2023. CO2 Intensity factor adjusted to reflect RPS value in 2023 (note: CalEEMod default factor is from 2012) - factor reduced by 24.3% based on change in eligible renewables from 22% in 2013 to 41% by 2023.

Land Use - Unit Amounts: Unrefrigerated Warehouse-No Rail: 545,735 sf (on 12.41 acres); Landscaping: 112,749 sf (2.59 acres) Parking: 26.05-2.59-12.41 acres = 11.05 acres for parking. Total lot acreage: 26.05 acres.

Construction Phase - Default construction schedule based on project characteristics (note - architectural coatings phased assumed to also occur during paving and building construction phases).

Off-road Equipment -

Off-road Equipment -

Grading - Balanced soil import/export (from Ken Lee, email dated March 30, 2020). Assume total site is graded (26.05 acres).

Vehicle Trips - Trip rates from Traffic Impact Analysis (Ganddini, 2020): 4.96 trips per thousdand sf.

Energy Use -

Construction Off-road Equipment Mitigation - Reductions include: Water Exposed Area 3 times daily; Unpaved Road Mitigation (Moisture Content at 12%; Vehicle Speed 15 MPH).

Energy Mitigation -

Fleet Mix - Fleet Mix updated to reflect Traffic Study (Ganddini, 2020) - 78.6% Passenger Car; 13.4% Heavy-duty Trucks (3 and 4 axle); 8.0% Medium-duty Trucks (2-axle).

Table Name	Column Name	Default Value	New Value
tblConstDustMitigation	WaterUnpavedRoadMoistureContent	0	12
tblConstDustMitigation	WaterUnpavedRoadVehicleSpeed	0	15
tblConstructionPhase	NumDays	35.00	170.00
tblFleetMix	HHD	0.03	0.13
tblFleetMix	HHD	0.03	0.13
tblFleetMix	HHD	0.03	0.13
tblFleetMix	LDA	0.55	0.79
tblFleetMix	LDA	0.55	0.79
tblFleetMix	LDA	0.55	0.79
tblFleetMix	LDT1	0.04	0.00
tblFleetMix	LDT1	0.04	0.00
tblFleetMix	LDT1	0.04	0.00

tblFleetMix	LDT2	0.21	0.00
tblFleetMix	LDT2	0.21	0.00
tblFleetMix	LDT2	0.21	0.00
tblFleetMix	LHD1	0.02	0.00
tblFleetMix	LHD1	0.02	0.00
tblFleetMix	LHD1	0.02	0.00
tblFleetMix	LHD2	6.2270e-003	0.00
tblFleetMix	LHD2	6.2270e-003	0.00
tblFleetMix	LHD2	6.2270e-003	0.00
tblFleetMix	MCY	5.1840e-003	0.00
tblFleetMix	MCY	5.1840e-003	0.00
tblFleetMix	MCY	5.1840e-003	0.00
tblFleetMix	MDV	0.12	0.00
tblFleetMix	MDV	0.12	0.00
tblFleetMix	MDV	0.12	0.00
tblFleetMix	MH	8.6200e-004	0.00
tblFleetMix	MH	8.6200e-004	0.00
tblFleetMix	MH	8.6200e-004	0.00
tblFleetMix	MHD	0.02	0.08
tblFleetMix	MHD	0.02	0.08
tblFleetMix	MHD	0.02	0.08
tblFleetMix	OBUS	2.5460e-003	0.00
tblFleetMix	OBUS	2.5460e-003	0.00
tblFleetMix	OBUS	2.5460e-003	0.00
tblFleetMix	SBUS	6.9200e-004	0.00
tblFleetMix	SBUS	6.9200e-004	0.00
tblFleetMix	SBUS	6.9200e-004	0.00

tblFleetMix	UBUS	2.1330e-003	0.00
tblFleetMix	UBUS	2.1330e-003	0.00
tblFleetMix	UBUS	2.1330e-003	0.00
tblGrading	AcresOfGrading	112.50	26.05
tblLandUse	LotAcreage	12.53	12.41
tblProjectCharacteristics	CO2IntensityFactor	702.44	531.75
tblVehicleTrips	ST_TR	22.75	0.00
tblVehicleTrips	ST_TR	1.32	4.96
tblVehicleTrips	SU_TR	16.74	0.00
tblVehicleTrips	SU_TR	0.68	4.96
tblVehicleTrips	WD_TR	1.89	0.00
tblVehicleTrips	WD_TR	6.97	4.96

2.0 Emissions Summary

2.1 Overall Construction

Unmitigated Construction

	ROG	NOx	CO	SO2	Fugitive PM10	Exhaust PM10	PM10 Total	Fugitive PM2.5	Exhaust PM2.5	PM2.5 Total	Bio- CO2	NBio- CO2	Total CO2	CH4	N2O	CO2e
Year	tons/yr										MT/yr					
2021	0.4357	3.9255	3.5498	0.0102	0.7611	0.1338	0.8948	0.2916	0.1245	0.4160	0.0000	932.0225	932.0225	0.1154	0.0000	934.9074
2022	1.8984	4.5717	5.1368	0.0168	0.8813	0.1188	1.0001	0.2376	0.1120	0.3495	0.0000	1,540.3171	1,540.3171	0.1258	0.0000	1,543.4629
2023	1.4154	0.9387	1.3266	3.8600e-003	0.2008	0.0304	0.2312	0.0540	0.0285	0.0825	0.0000	352.2105	352.2105	0.0347	0.0000	353.0784
Maximum	**1.8984**	**4.5717**	**5.1368**	**0.0168**	**0.8813**	**0.1338**	**1.0001**	**0.2916**	**0.1245**	**0.4160**	**0.0000**	**1,540.3171**	**1,540.3171**	**0.1258**	**0.0000**	**1,543.4629**

Mitigated Construction

	ROG	NOx	CO	SO2	Fugitive PM10	Exhaust PM10	PM10 Total	Fugitive PM2.5	Exhaust PM2.5	PM2.5 Total	Bio- CO2	NBio- CO2	Total CO2	CH4	N2O	CO2e
Year	tons/yr										MT/yr					
2021	0.4357	3.9255	3.5498	0.0102	0.5598	0.1338	0.6935	0.1846	0.1245	0.3091	0.0000	932.0221	932.0221	0.1154	0.0000	934.9071
2022	1.8984	4.5717	5.1368	0.0168	0.8813	0.1188	1.0001	0.2376	0.1120	0.3495	0.0000	1,540.3167	1,540.3167	0.1258	0.0000	1,543.4625
2023	1.4154	0.9387	1.3266	3.8600e-003	0.2008	0.0304	0.2312	0.0540	0.0285	0.0825	0.0000	352.2104	352.2104	0.0347	0.0000	353.0783
Maximum	**1.8984**	**4.5717**	**5.1368**	**0.0168**	**0.8813**	**0.1338**	**1.0001**	**0.2376**	**0.1245**	**0.3495**	**0.0000**	**1,540.3167**	**1,540.3167**	**0.1258**	**0.0000**	**1,543.4625**

Irwindale 5175 Vincent Avenue - Los Angeles-South Coast County, Annual

	ROG	NOx	CO	SO2	Fugitive PM10	Exhaust PM10	PM10 Total	Fugitive PM2.5	Exhaust PM2.5	PM2.5 Total	Bio- CO2	NBio-CO2	Total CO2	CH4	N20	CO2e
Percent Reduction	**0.00**	**0.00**	**0.00**	**0.00**	**10.92**	**0.00**	**9.47**	**18.34**	**0.00**	**12.61**	**0.00**	**0.00**	**0.00**	**0.00**	**0.00**	**0.00**

Quarter	Start Date	End Date	Maximum Unmitigated ROG + NOX (tons/quarter)	Maximum Mitigated ROG + NOX (tons/quarter)
1	**4-1-2021**	**6-30-2021**	1.5867	1.5867
2	**7-1-2021**	**9-30-2021**	1.3643	1.3643
3	**10-1-2021**	**12-31-2021**	1.3765	1.3765
4	**1-1-2022**	**3-31-2022**	1.2425	1.2425
5	**4-1-2022**	**6-30-2022**	1.2454	1.2454
6	**7-1-2022**	**9-30-2022**	1.6105	1.6105
7	**10-1-2022**	**12-31-2022**	2.3502	2.3502
8	**1-1-2023**	**3-31-2023**	1.9337	1.9337
9	**4-1-2023**	**6-30-2023**	0.4158	0.4158
		Highest	2.3502	2.3502

2.2 Overall Operational

Unmitigated Operational

	ROG	NOx	CO	SO2	Fugitive PM10	Exhaust PM10	PM10 Total	Fugitive PM2.5	Exhaust PM2.5	PM2.5 Total	Bio- CO2	NBio- CO2	Total CO2	CH4	N2O	CO2e
Category	tons/yr										MT/yr					
Area	2.2645	6.0000e-005	7.1400e-003	0.0000		3.0000e-005	3.0000e-005		3.0000e-005	3.0000e-005	0.0000	0.0139	0.0139	4.0000e-005	0.0000	0.0148
Energy	0.0533	0.4842	0.4067	2.9100e-003		0.0368	0.0368		0.0368	0.0368	0.0000	2,028.8632	2,028.8632	0.0920	0.0266	2,039.0927
Mobile	0.6701	10.9104	10.6989	0.0711	4.6581	0.0396	4.6976	1.2589	0.0370	1.2959	0.0000	6,740.9512	6,740.9512	0.2794	0.0000	6,747.9356
Waste						0.0000	0.0000		0.0000	0.0000	137.4127	0.0000	137.4127	8.1209	0.0000	340.4342
Water						0.0000	0.0000		0.0000	0.0000	40.0382	404.6251	444.6633	4.1344	0.1017	578.3191
Total	**2.9879**	**11.3946**	**11.1127**	**0.0740**	**4.6581**	**0.0764**	**4.7345**	**1.2589**	**0.0738**	**1.3328**	**177.4509**	**9,174.4533**	**9,351.9042**	**12.6267**	**0.1283**	**9,705.7963**

2.2 Overall Operational

Mitigated Operational

	ROG	NOx	CO	SO2	Fugitive PM10	Exhaust PM10	PM10 Total	Fugitive PM2.5	Exhaust PM2.5	PM2.5 Total	Bio- CO2	NBio- CO2	Total CO2	CH4	N2O	CO2e
Category	tons/yr										MT/yr					
Area	2.2645	6.0000e-005	7.1400e-003	0.0000		3.0000e-005	3.0000e-005		3.0000e-005	3.0000e-005	0.0000	0.0139	0.0139	4.0000e-005	0.0000	0.0148
Energy	0.0533	0.4842	0.4067	2.9100e-003		0.0368	0.0368		0.0368	0.0368	0.0000	2,028.8632	2,028.8632	0.0920	0.0266	2,039.0927
Mobile	0.6701	10.9104	10.6989	0.0711	4.6581	0.0396	4.6976	1.2589	0.0370	1.2959	0.0000	6,740.9512	6,740.9512	0.2794	0.0000	6,747.9356
Waste						0.0000	0.0000		0.0000	0.0000	137.4127	0.0000	137.4127	8.1209	0.0000	340.4342
Water						0.0000	0.0000		0.0000	0.0000	40.0382	404.6251	444.6633	4.1344	0.1017	578.3191
Total	**2.9879**	**11.3946**	**11.1127**	**0.0740**	**4.6581**	**0.0764**	**4.7345**	**1.2589**	**0.0738**	**1.3328**	**177.4509**	**9,174.4533**	**9,351.9042**	**12.6267**	**0.1283**	**9,705.7963**

	ROG	NOx	CO	SO2	Fugitive PM10	Exhaust PM10	PM10 Total	Fugitive PM2.5	Exhaust PM2.5	PM2.5 Total	Bio- CO2	NBio-CO2	Total CO2	CH4	N20	CO2e
Percent Reduction	**0.00**	**0.00**	**0.00**	**0.00**	**0.00**	**0.00**	**0.00**	**0.00**	**0.00**	**0.00**	**0.00**	**0.00**	**0.00**	**0.00**	**0.00**	**0.00**

3.0 Construction Detail

Construction Phase

Phase Number	Phase Name	Phase Type	Start Date	End Date	Num Days Week	Num Days	Phase Description
1	Site Preparation	Site Preparation	4/1/2021	4/28/2021	5	20	
2	Grading	Grading	4/29/2021	6/30/2021	5	45	
3	Building Construction	Building Construction	7/1/2021	3/8/2023	5	440	
4	Paving	Paving	3/9/2023	4/26/2023	5	35	
5	Architectural Coating	Architectural Coating	9/1/2022	4/26/2023	5	170	

Acres of Grading (Site Preparation Phase): 0

Acres of Grading (Grading Phase): 26.05

Acres of Paving: 11.05

Residential Indoor: 0; Residential Outdoor: 0; Non-Residential Indoor: 818,610; Non-Residential Outdoor: 272,870; Striped Parking Area: 28,880 (Architectural Coating – sqft)

OffRoad Equipment

Phase Name	Offroad Equipment Type	Amount	Usage Hours	Horse Power	Load Factor
Site Preparation	Rubber Tired Dozers	3	8.00	247	0.40
Site Preparation	Tractors/Loaders/Backhoes	4	8.00	97	0.37
Grading	Excavators	2	8.00	158	0.38
Grading	Graders	1	8.00	187	0.41
Grading	Rubber Tired Dozers	1	8.00	247	0.40
Grading	Scrapers	2	8.00	367	0.48
Grading	Tractors/Loaders/Backhoes	2	8.00	97	0.37
Building Construction	Cranes	1	7.00	231	0.29
Building Construction	Forklifts	3	8.00	89	0.20
Building Construction	Generator Sets	1	8.00	84	0.74
Building Construction	Tractors/Loaders/Backhoes	3	7.00	97	0.37
Building Construction	Welders	1	8.00	46	0.45
Architectural Coating	Air Compressors	1	6.00	78	0.48
Paving	Pavers	2	8.00	130	0.42
Paving	Paving Equipment	2	8.00	132	0.36
Paving	Rollers	2	8.00	80	0.38

Trips and VMT

Phase Name	Offroad Equipment Count	Worker Trip Number	Vendor Trip Number	Hauling Trip Number	Worker Trip Length	Vendor Trip Length	Hauling Trip Length	Worker Vehicle Class	Vendor Vehicle Class	Hauling Vehicle Class
Site Preparation	7	18.00	0.00	0.00	14.70	6.90	20.00	LD_Mix	HDT_Mix	HHDT
Grading	8	20.00	0.00	0.00	14.70	6.90	20.00	LD_Mix	HDT_Mix	HHDT
Building Construction	9	479.00	187.00	0.00	14.70	6.90	20.00	LD_Mix	HDT_Mix	HHDT
Architectural Coating	1	96.00	0.00	0.00	14.70	6.90	20.00	LD_Mix	HDT_Mix	HHDT
Paving	6	15.00	0.00	0.00	14.70	6.90	20.00	LD_Mix	HDT_Mix	HHDT

3.1 Mitigation Measures Construction

Water Exposed Area

Water Unpaved Roads

Reduce Vehicle Speed on Unpaved Roads

3.2 Site Preparation - 2021

Unmitigated Construction On-Site

	ROG	NOx	CO	SO2	Fugitive PM10	Exhaust PM10	PM10 Total	Fugitive PM2.5	Exhaust PM2.5	PM2.5 Total	Bio- CO2	NBio- CO2	Total CO2	CH4	N2O	CO2e
Category	tons/yr										MT/yr					
Fugitive Dust					0.1807	0.0000	0.1807	0.0993	0.0000	0.0993	0.0000	0.0000	0.0000	0.0000	0.0000	0.0000
Off-Road	0.0389	0.4050	0.2115	3.8000e-004		0.0204	0.0204		0.0188	0.0188	0.0000	33.4357	33.4357	0.0108	0.0000	33.7061
Total	**0.0389**	**0.4050**	**0.2115**	**3.8000e-004**	**0.1807**	**0.0204**	**0.2011**	**0.0993**	**0.0188**	**0.1181**	**0.0000**	**33.4357**	**33.4357**	**0.0108**	**0.0000**	**33.7061**

3.2 Site Preparation - 2021

Unmitigated Construction Off-Site

	ROG	NOx	CO	SO2	Fugitive PM10	Exhaust PM10	PM10 Total	Fugitive PM2.5	Exhaust PM2.5	PM2.5 Total	Bio- CO2	NBio- CO2	Total CO2	CH4	N2O	CO2e
Category	tons/yr										MT/yr					
Hauling	0.0000	0.0000	0.0000	0.0000	0.0000	0.0000	0.0000	0.0000	0.0000	0.0000	0.0000	0.0000	0.0000	0.0000	0.0000	0.0000
Vendor	0.0000	0.0000	0.0000	0.0000	0.0000	0.0000	0.0000	0.0000	0.0000	0.0000	0.0000	0.0000	0.0000	0.0000	0.0000	0.0000
Worker	7.7000e-004	6.0000e-004	6.8100e-003	2.0000e-005	1.9700e-003	2.0000e-005	1.9900e-003	5.2000e-004	1.0000e-005	5.4000e-004	0.0000	1.7801	1.7801	5.0000e-005	0.0000	1.7814
Total	**7.7000e-004**	**6.0000e-004**	**6.8100e-003**	**2.0000e-005**	**1.9700e-003**	**2.0000e-005**	**1.9900e-003**	**5.2000e-004**	**1.0000e-005**	**5.4000e-004**	**0.0000**	**1.7801**	**1.7801**	**5.0000e-005**	**0.0000**	**1.7814**

Mitigated Construction On-Site

	ROG	NOx	CO	SO2	Fugitive PM10	Exhaust PM10	PM10 Total	Fugitive PM2.5	Exhaust PM2.5	PM2.5 Total	Bio- CO2	NBio- CO2	Total CO2	CH4	N2O	CO2e
Category	tons/yr										MT/yr					
Fugitive Dust					0.0705	0.0000	0.0705	0.0387	0.0000	0.0387	0.0000	0.0000	0.0000	0.0000	0.0000	0.0000
Off-Road	0.0389	0.4050	0.2115	3.8000e-004		0.0204	0.0204		0.0188	0.0188	0.0000	33.4357	33.4357	0.0108	0.0000	33.7060
Total	**0.0389**	**0.4050**	**0.2115**	**3.8000e-004**	**0.0705**	**0.0204**	**0.0909**	**0.0387**	**0.0188**	**0.0575**	**0.0000**	**33.4357**	**33.4357**	**0.0108**	**0.0000**	**33.7060**

3.2 Site Preparation - 2021

Mitigated Construction Off-Site

	ROG	NOx	CO	SO2	Fugitive PM10	Exhaust PM10	PM10 Total	Fugitive PM2.5	Exhaust PM2.5	PM2.5 Total	Bio- CO2	NBio- CO2	Total CO2	CH4	N2O	CO2e
Category	tons/yr										MT/yr					
Hauling	0.0000	0.0000	0.0000	0.0000	0.0000	0.0000	0.0000	0.0000	0.0000	0.0000	0.0000	0.0000	0.0000	0.0000	0.0000	0.0000
Vendor	0.0000	0.0000	0.0000	0.0000	0.0000	0.0000	0.0000	0.0000	0.0000	0.0000	0.0000	0.0000	0.0000	0.0000	0.0000	0.0000
Worker	7.7000e-004	6.0000e-004	6.8100e-003	2.0000e-005	1.9700e-003	2.0000e-005	1.9900e-003	5.2000e-004	1.0000e-005	5.4000e-004	0.0000	1.7801	1.7801	5.0000e-005	0.0000	1.7814
Total	**7.7000e-004**	**6.0000e-004**	**6.8100e-003**	**2.0000e-005**	**1.9700e-003**	**2.0000e-005**	**1.9900e-003**	**5.2000e-004**	**1.0000e-005**	**5.4000e-004**	**0.0000**	**1.7801**	**1.7801**	**5.0000e-005**	**0.0000**	**1.7814**

3.3 Grading - 2021

Unmitigated Construction On-Site

	ROG	NOx	CO	SO2	Fugitive PM10	Exhaust PM10	PM10 Total	Fugitive PM2.5	Exhaust PM2.5	PM2.5 Total	Bio- CO2	NBio- CO2	Total CO2	CH4	N2O	CO2e
Category	tons/yr										MT/yr					
Fugitive Dust					0.1493	0.0000	0.1493	0.0760	0.0000	0.0760	0.0000	0.0000	0.0000	0.0000	0.0000	0.0000
Off-Road	0.0943	1.0440	0.6948	1.4000e-003		0.0447	0.0447		0.0411	0.0411	0.0000	122.6137	122.6137	0.0397	0.0000	123.6051
Total	**0.0943**	**1.0440**	**0.6948**	**1.4000e-003**	**0.1493**	**0.0447**	**0.1940**	**0.0760**	**0.0411**	**0.1171**	**0.0000**	**122.6137**	**122.6137**	**0.0397**	**0.0000**	**123.6051**

3.3 Grading - 2021

Unmitigated Construction Off-Site

	ROG	NOx	CO	SO2	Fugitive PM10	Exhaust PM10	PM10 Total	Fugitive PM2.5	Exhaust PM2.5	PM2.5 Total	Bio- CO2	NBio- CO2	Total CO2	CH4	N2O	CO2e
Category	tons/yr										MT/yr					
Hauling	0.0000	0.0000	0.0000	0.0000	0.0000	0.0000	0.0000	0.0000	0.0000	0.0000	0.0000	0.0000	0.0000	0.0000	0.0000	0.0000
Vendor	0.0000	0.0000	0.0000	0.0000	0.0000	0.0000	0.0000	0.0000	0.0000	0.0000	0.0000	0.0000	0.0000	0.0000	0.0000	0.0000
Worker	1.9400e-003	1.5100e-003	0.0170	5.0000e-005	4.9300e-003	4.0000e-005	4.9700e-003	1.3100e-003	4.0000e-005	1.3500e-003	0.0000	4.4501	4.4501	1.3000e-004	0.0000	4.4534
Total	**1.9400e-003**	**1.5100e-003**	**0.0170**	**5.0000e-005**	**4.9300e-003**	**4.0000e-005**	**4.9700e-003**	**1.3100e-003**	**4.0000e-005**	**1.3500e-003**	**0.0000**	**4.4501**	**4.4501**	**1.3000e-004**	**0.0000**	**4.4534**

Mitigated Construction On-Site

	ROG	NOx	CO	SO2	Fugitive PM10	Exhaust PM10	PM10 Total	Fugitive PM2.5	Exhaust PM2.5	PM2.5 Total	Bio- CO2	NBio- CO2	Total CO2	CH4	N2O	CO2e
Category	tons/yr										MT/yr					
Fugitive Dust					0.0582	0.0000	0.0582	0.0296	0.0000	0.0296	0.0000	0.0000	0.0000	0.0000	0.0000	0.0000
Off-Road	0.0943	1.0440	0.6948	1.4000e-003		0.0447	0.0447		0.0411	0.0411	0.0000	122.6136	122.6136	0.0397	0.0000	123.6050
Total	**0.0943**	**1.0440**	**0.6948**	**1.4000e-003**	**0.0582**	**0.0447**	**0.1029**	**0.0296**	**0.0411**	**0.0707**	**0.0000**	**122.6136**	**122.6136**	**0.0397**	**0.0000**	**123.6050**

3.3 Grading - 2021

Mitigated Construction Off-Site

	ROG	NOx	CO	SO2	Fugitive PM10	Exhaust PM10	PM10 Total	Fugitive PM2.5	Exhaust PM2.5	PM2.5 Total	Bio- CO2	NBio- CO2	Total CO2	CH4	N2O	CO2e
Category	tons/yr										MT/yr					
Hauling	0.0000	0.0000	0.0000	0.0000	0.0000	0.0000	0.0000	0.0000	0.0000	0.0000	0.0000	0.0000	0.0000	0.0000	0.0000	0.0000
Vendor	0.0000	0.0000	0.0000	0.0000	0.0000	0.0000	0.0000	0.0000	0.0000	0.0000	0.0000	0.0000	0.0000	0.0000	0.0000	0.0000
Worker	1.9400e-003	1.5100e-003	0.0170	5.0000e-005	4.9300e-003	4.0000e-005	4.9700e-003	1.3100e-003	4.0000e-005	1.3500e-003	0.0000	4.4501	4.4501	1.3000e-004	0.0000	4.4534
Total	**1.9400e-003**	**1.5100e-003**	**0.0170**	**5.0000e-005**	**4.9300e-003**	**4.0000e-005**	**4.9700e-003**	**1.3100e-003**	**4.0000e-005**	**1.3500e-003**	**0.0000**	**4.4501**	**4.4501**	**1.3000e-004**	**0.0000**	**4.4534**

3.4 Building Construction - 2021

Unmitigated Construction On-Site

	ROG	NOx	CO	SO2	Fugitive PM10	Exhaust PM10	PM10 Total	Fugitive PM2.5	Exhaust PM2.5	PM2.5 Total	Bio- CO2	NBio- CO2	Total CO2	CH4	N2O	CO2e
Category	tons/yr										MT/yr					
Off-Road	0.1255	1.1505	1.0940	1.7800e-003		0.0633	0.0633		0.0595	0.0595	0.0000	152.8806	152.8806	0.0369	0.0000	153.8027
Total	**0.1255**	**1.1505**	**1.0940**	**1.7800e-003**		**0.0633**	**0.0633**		**0.0595**	**0.0595**	**0.0000**	**152.8806**	**152.8806**	**0.0369**	**0.0000**	**153.8027**

3.4 Building Construction - 2021

Unmitigated Construction Off-Site

	ROG	NOx	CO	SO2	Fugitive PM10	Exhaust PM10	PM10 Total	Fugitive PM2.5	Exhaust PM2.5	PM2.5 Total	Bio- CO2	NBio- CO2	Total CO2	CH4	N2O	CO2e
Category	tons/yr										MT/yr					
Hauling	0.0000	0.0000	0.0000	0.0000	0.0000	0.0000	0.0000	0.0000	0.0000	0.0000	0.0000	0.0000	0.0000	0.0000	0.0000	0.0000
Vendor	0.0383	1.2180	0.3302	3.1400e-003	0.0777	2.4800e-003	0.0802	0.0224	2.3700e-003	0.0248	0.0000	304.2261	304.2261	0.0187	0.0000	304.6926
Worker	0.1360	0.1059	1.1955	3.4600e-003	0.3464	2.8600e-003	0.3493	0.0920	2.6300e-003	0.0946	0.0000	312.6362	312.6362	9.2000e-003	0.0000	312.8662
Total	**0.1744**	**1.3239**	**1.5257**	**6.6000e-003**	**0.4242**	**5.3400e-003**	**0.4295**	**0.1145**	**5.0000e-003**	**0.1195**	**0.0000**	**616.8623**	**616.8623**	**0.0279**	**0.0000**	**617.5588**

Mitigated Construction On-Site

	ROG	NOx	CO	SO2	Fugitive PM10	Exhaust PM10	PM10 Total	Fugitive PM2.5	Exhaust PM2.5	PM2.5 Total	Bio- CO2	NBio- CO2	Total CO2	CH4	N2O	CO2e
Category	tons/yr										MT/yr					
Off-Road	0.1255	1.1505	1.0940	1.7800e-003		0.0633	0.0633		0.0595	0.0595	0.0000	152.8804	152.8804	0.0369	0.0000	153.8025
Total	**0.1255**	**1.1505**	**1.0940**	**1.7800e-003**		**0.0633**	**0.0633**		**0.0595**	**0.0595**	**0.0000**	**152.8804**	**152.8804**	**0.0369**	**0.0000**	**153.8025**

3.4 Building Construction - 2021

Mitigated Construction Off-Site

	ROG	NOx	CO	SO2	Fugitive PM10	Exhaust PM10	PM10 Total	Fugitive PM2.5	Exhaust PM2.5	PM2.5 Total	Bio- CO2	NBio- CO2	Total CO2	CH4	N2O	CO2e
Category	tons/yr										MT/yr					
Hauling	0.0000	0.0000	0.0000	0.0000	0.0000	0.0000	0.0000	0.0000	0.0000	0.0000	0.0000	0.0000	0.0000	0.0000	0.0000	0.0000
Vendor	0.0383	1.2180	0.3302	3.1400e-003	0.0777	2.4800e-003	0.0802	0.0224	2.3700e-003	0.0248	0.0000	304.2261	304.2261	0.0187	0.0000	304.6926
Worker	0.1360	0.1059	1.1955	3.4600e-003	0.3464	2.8600e-003	0.3493	0.0920	2.6300e-003	0.0946	0.0000	312.6362	312.6362	9.2000e-003	0.0000	312.8662
Total	**0.1744**	**1.3239**	**1.5257**	**6.6000e-003**	**0.4242**	**5.3400e-003**	**0.4295**	**0.1145**	**5.0000e-003**	**0.1195**	**0.0000**	**616.8623**	**616.8623**	**0.0279**	**0.0000**	**617.5588**

3.4 Building Construction - 2022

Unmitigated Construction On-Site

	ROG	NOx	CO	SO2	Fugitive PM10	Exhaust PM10	PM10 Total	Fugitive PM2.5	Exhaust PM2.5	PM2.5 Total	Bio- CO2	NBio- CO2	Total CO2	CH4	N2O	CO2e
Category	tons/yr										MT/yr					
Off-Road	0.2218	2.0300	2.1272	3.5000e-003		0.1052	0.1052		0.0990	0.0990	0.0000	301.2428	301.2428	0.0722	0.0000	303.0471
Total	**0.2218**	**2.0300**	**2.1272**	**3.5000e-003**		**0.1052**	**0.1052**		**0.0990**	**0.0990**	**0.0000**	**301.2428**	**301.2428**	**0.0722**	**0.0000**	**303.0471**

3.4 Building Construction - 2022

Unmitigated Construction Off-Site

	ROG	NOx	CO	SO2	Fugitive PM10	Exhaust PM10	PM10 Total	Fugitive PM2.5	Exhaust PM2.5	PM2.5 Total	Bio- CO2	NBio- CO2	Total CO2	CH4	N2O	CO2e
Category	tons/yr										MT/yr					
Hauling	0.0000	0.0000	0.0000	0.0000	0.0000	0.0000	0.0000	0.0000	0.0000	0.0000	0.0000	0.0000	0.0000	0.0000	0.0000	0.0000
Vendor	0.0709	2.2793	0.6155	6.1200e-003	0.1531	4.2800e-003	0.1574	0.0442	4.0900e-003	0.0483	0.0000	593.9699	593.9699	0.0355	0.0000	594.8569
Worker	0.2513	0.1884	2.1697	6.5700e-003	0.6824	5.4500e-003	0.6878	0.1812	5.0200e-003	0.1863	0.0000	594.1522	594.1522	0.0164	0.0000	594.5613
Total	**0.3221**	**2.4678**	**2.7851**	**0.0127**	**0.8355**	**9.7300e-003**	**0.8452**	**0.2254**	**9.1100e-003**	**0.2345**	**0.0000**	**1,188.1221**	**1,188.1221**	**0.0518**	**0.0000**	**1,189.4181**

Mitigated Construction On-Site

	ROG	NOx	CO	SO2	Fugitive PM10	Exhaust PM10	PM10 Total	Fugitive PM2.5	Exhaust PM2.5	PM2.5 Total	Bio- CO2	NBio- CO2	Total CO2	CH4	N2O	CO2e
Category	tons/yr										MT/yr					
Off-Road	0.2218	2.0300	2.1272	3.5000e-003		0.1052	0.1052		0.0990	0.0990	0.0000	301.2425	301.2425	0.0722	0.0000	303.0467
Total	**0.2218**	**2.0300**	**2.1272**	**3.5000e-003**		**0.1052**	**0.1052**		**0.0990**	**0.0990**	**0.0000**	**301.2425**	**301.2425**	**0.0722**	**0.0000**	**303.0467**

3.4 Building Construction - 2022

Mitigated Construction Off-Site

	ROG	NOx	CO	SO2	Fugitive PM10	Exhaust PM10	PM10 Total	Fugitive PM2.5	Exhaust PM2.5	PM2.5 Total	Bio- CO2	NBio- CO2	Total CO2	CH4	N2O	CO2e
Category	tons/yr										MT/yr					
Hauling	0.0000	0.0000	0.0000	0.0000	0.0000	0.0000	0.0000	0.0000	0.0000	0.0000	0.0000	0.0000	0.0000	0.0000	0.0000	0.0000
Vendor	0.0709	2.2793	0.6155	6.1200e-003	0.1531	4.2800e-003	0.1574	0.0442	4.0900e-003	0.0483	0.0000	593.9699	593.9699	0.0355	0.0000	594.8569
Worker	0.2513	0.1884	2.1697	6.5700e-003	0.6824	5.4500e-003	0.6878	0.1812	5.0200e-003	0.1863	0.0000	594.1522	594.1522	0.0164	0.0000	594.5613
Total	**0.3221**	**2.4678**	**2.7851**	**0.0127**	**0.8355**	**9.7300e-003**	**0.8452**	**0.2254**	**9.1100e-003**	**0.2345**	**0.0000**	**1,188.1221**	**1,188.1221**	**0.0518**	**0.0000**	**1,189.4181**

3.4 Building Construction - 2023

Unmitigated Construction On-Site

	ROG	NOx	CO	SO2	Fugitive PM10	Exhaust PM10	PM10 Total	Fugitive PM2.5	Exhaust PM2.5	PM2.5 Total	Bio- CO2	NBio- CO2	Total CO2	CH4	N2O	CO2e
Category	tons/yr										MT/yr					
Off-Road	0.0378	0.3452	0.3899	6.5000e-004		0.0168	0.0168		0.0158	0.0158	0.0000	55.6331	55.6331	0.0132	0.0000	55.9640
Total	**0.0378**	**0.3452**	**0.3899**	**6.5000e-004**		**0.0168**	**0.0168**		**0.0158**	**0.0158**	**0.0000**	**55.6331**	**55.6331**	**0.0132**	**0.0000**	**55.9640**

3.4 Building Construction - 2023

Unmitigated Construction Off-Site

	ROG	NOx	CO	SO2	Fugitive PM10	Exhaust PM10	PM10 Total	Fugitive PM2.5	Exhaust PM2.5	PM2.5 Total	Bio- CO2	NBio- CO2	Total CO2	CH4	N2O	CO2e
Category	tons/yr										MT/yr					
Hauling	0.0000	0.0000	0.0000	0.0000	0.0000	0.0000	0.0000	0.0000	0.0000	0.0000	0.0000	0.0000	0.0000	0.0000	0.0000	0.0000
Vendor	9.7100e-003	0.3179	0.1019	1.0900e-003	0.0283	3.7000e-004	0.0286	8.1600e-003	3.5000e-004	8.5100e-003	0.0000	106.2231	106.2231	5.7900e-003	0.0000	106.3678
Worker	0.0436	0.0315	0.3683	1.1700e-003	0.1260	9.8000e-004	0.1270	0.0335	9.0000e-004	0.0344	0.0000	105.6758	105.6758	2.7200e-003	0.0000	105.7438
Total	**0.0533**	**0.3494**	**0.4703**	**2.2600e-003**	**0.1542**	**1.3500e-003**	**0.1556**	**0.0416**	**1.2500e-003**	**0.0429**	**0.0000**	**211.8989**	**211.8989**	**8.5100e-003**	**0.0000**	**212.1116**

Mitigated Construction On-Site

	ROG	NOx	CO	SO2	Fugitive PM10	Exhaust PM10	PM10 Total	Fugitive PM2.5	Exhaust PM2.5	PM2.5 Total	Bio- CO2	NBio- CO2	Total CO2	CH4	N2O	CO2e
Category	tons/yr										MT/yr					
Off-Road	0.0378	0.3452	0.3899	6.5000e-004		0.0168	0.0168		0.0158	0.0158	0.0000	55.6331	55.6331	0.0132	0.0000	55.9639
Total	**0.0378**	**0.3452**	**0.3899**	**6.5000e-004**		**0.0168**	**0.0168**		**0.0158**	**0.0158**	**0.0000**	**55.6331**	**55.6331**	**0.0132**	**0.0000**	**55.9639**

3.4 Building Construction - 2023

Mitigated Construction Off-Site

	ROG	NOx	CO	SO2	Fugitive PM10	Exhaust PM10	PM10 Total	Fugitive PM2.5	Exhaust PM2.5	PM2.5 Total	Bio- CO2	NBio- CO2	Total CO2	CH4	N2O	CO2e
Category	tons/yr										MT/yr					
Hauling	0.0000	0.0000	0.0000	0.0000	0.0000	0.0000	0.0000	0.0000	0.0000	0.0000	0.0000	0.0000	0.0000	0.0000	0.0000	0.0000
Vendor	9.7100e-003	0.3179	0.1019	1.0900e-003	0.0283	3.7000e-004	0.0286	8.1600e-003	3.5000e-004	8.5100e-003	0.0000	106.2231	106.2231	5.7900e-003	0.0000	106.3678
Worker	0.0436	0.0315	0.3683	1.1700e-003	0.1260	9.8000e-004	0.1270	0.0335	9.0000e-004	0.0344	0.0000	105.6758	105.6758	2.7200e-003	0.0000	105.7438
Total	**0.0533**	**0.3494**	**0.4703**	**2.2600e-003**	**0.1542**	**1.3500e-003**	**0.1556**	**0.0416**	**1.2500e-003**	**0.0429**	**0.0000**	**211.8989**	**211.8989**	**8.5100e-003**	**0.0000**	**212.1116**

3.5 Paving - 2023

Unmitigated Construction On-Site

	ROG	NOx	CO	SO2	Fugitive PM10	Exhaust PM10	PM10 Total	Fugitive PM2.5	Exhaust PM2.5	PM2.5 Total	Bio- CO2	NBio- CO2	Total CO2	CH4	N2O	CO2e
Category	tons/yr										MT/yr					
Off-Road	0.0181	0.1784	0.2552	4.0000e-004		8.9300e-003	8.9300e-003		8.2100e-003	8.2100e-003	0.0000	35.0470	35.0470	0.0113	0.0000	35.3304
Paving	0.0145					0.0000	0.0000		0.0000	0.0000	0.0000	0.0000	0.0000	0.0000	0.0000	0.0000
Total	**0.0326**	**0.1784**	**0.2552**	**4.0000e-004**		**8.9300e-003**	**8.9300e-003**		**8.2100e-003**	**8.2100e-003**	**0.0000**	**35.0470**	**35.0470**	**0.0113**	**0.0000**	**35.3304**

3.5 Paving - 2023

Unmitigated Construction Off-Site

	ROG	NOx	CO	SO2	Fugitive PM10	Exhaust PM10	PM10 Total	Fugitive PM2.5	Exhaust PM2.5	PM2.5 Total	Bio- CO2	NBio- CO2	Total CO2	CH4	N2O	CO2e
Category	tons/yr										MT/yr					
Hauling	0.0000	0.0000	0.0000	0.0000	0.0000	0.0000	0.0000	0.0000	0.0000	0.0000	0.0000	0.0000	0.0000	0.0000	0.0000	0.0000
Vendor	0.0000	0.0000	0.0000	0.0000	0.0000	0.0000	0.0000	0.0000	0.0000	0.0000	0.0000	0.0000	0.0000	0.0000	0.0000	0.0000
Worker	1.0000e-003	7.2000e-004	8.4100e-003	3.0000e-005	2.8800e-003	2.0000e-005	2.9000e-003	7.6000e-004	2.0000e-005	7.8000e-004	0.0000	2.4130	2.4130	6.0000e-005	0.0000	2.4146
Total	**1.0000e-003**	**7.2000e-004**	**8.4100e-003**	**3.0000e-005**	**2.8800e-003**	**2.0000e-005**	**2.9000e-003**	**7.6000e-004**	**2.0000e-005**	**7.8000e-004**	**0.0000**	**2.4130**	**2.4130**	**6.0000e-005**	**0.0000**	**2.4146**

Mitigated Construction On-Site

	ROG	NOx	CO	SO2	Fugitive PM10	Exhaust PM10	PM10 Total	Fugitive PM2.5	Exhaust PM2.5	PM2.5 Total	Bio- CO2	NBio- CO2	Total CO2	CH4	N2O	CO2e
Category	tons/yr										MT/yr					
Off-Road	0.0181	0.1784	0.2552	4.0000e-004		8.9300e-003	8.9300e-003		8.2100e-003	8.2100e-003	0.0000	35.0470	35.0470	0.0113	0.0000	35.3304
Paving	0.0145					0.0000	0.0000		0.0000	0.0000	0.0000	0.0000	0.0000	0.0000	0.0000	0.0000
Total	**0.0326**	**0.1784**	**0.2552**	**4.0000e-004**		**8.9300e-003**	**8.9300e-003**		**8.2100e-003**	**8.2100e-003**	**0.0000**	**35.0470**	**35.0470**	**0.0113**	**0.0000**	**35.3304**

3.5 Paving - 2023

Mitigated Construction Off-Site

	ROG	NOx	CO	SO2	Fugitive PM10	Exhaust PM10	PM10 Total	Fugitive PM2.5	Exhaust PM2.5	PM2.5 Total	Bio- CO2	NBio- CO2	Total CO2	CH4	N2O	CO2e
Category	tons/yr										MT/yr					
Hauling	0.0000	0.0000	0.0000	0.0000	0.0000	0.0000	0.0000	0.0000	0.0000	0.0000	0.0000	0.0000	0.0000	0.0000	0.0000	0.0000
Vendor	0.0000	0.0000	0.0000	0.0000	0.0000	0.0000	0.0000	0.0000	0.0000	0.0000	0.0000	0.0000	0.0000	0.0000	0.0000	0.0000
Worker	1.0000e-003	7.2000e-004	8.4100e-003	3.0000e-005	2.8800e-003	2.0000e-005	2.9000e-003	7.6000e-004	2.0000e-005	7.8000e-004	0.0000	2.4130	2.4130	6.0000e-005	0.0000	2.4146
Total	**1.0000e-003**	**7.2000e-004**	**8.4100e-003**	**3.0000e-005**	**2.8800e-003**	**2.0000e-005**	**2.9000e-003**	**7.6000e-004**	**2.0000e-005**	**7.8000e-004**	**0.0000**	**2.4130**	**2.4130**	**6.0000e-005**	**0.0000**	**2.4146**

3.6 Architectural Coating - 2022

Unmitigated Construction On-Site

	ROG	NOx	CO	SO2	Fugitive PM10	Exhaust PM10	PM10 Total	Fugitive PM2.5	Exhaust PM2.5	PM2.5 Total	Bio- CO2	NBio- CO2	Total CO2	CH4	N2O	CO2e
Category	tons/yr										MT/yr					
Archit. Coating	1.3288					0.0000	0.0000		0.0000	0.0000	0.0000	0.0000	0.0000	0.0000	0.0000	0.0000
Off-Road	8.9000e-003	0.0613	0.0789	1.3000e-004		3.5500e-003	3.5500e-003		3.5500e-003	3.5500e-003	0.0000	11.1067	11.1067	7.2000e-004	0.0000	11.1247
Total	**1.3377**	**0.0613**	**0.0789**	**1.3000e-004**		**3.5500e-003**	**3.5500e-003**		**3.5500e-003**	**3.5500e-003**	**0.0000**	**11.1067**	**11.1067**	**7.2000e-004**	**0.0000**	**11.1247**

3.6 Architectural Coating - 2022

Unmitigated Construction Off-Site

	ROG	NOx	CO	SO2	Fugitive PM10	Exhaust PM10	PM10 Total	Fugitive PM2.5	Exhaust PM2.5	PM2.5 Total	Bio- CO2	NBio- CO2	Total CO2	CH4	N2O	CO2e
Category	tons/yr										MT/yr					
Hauling	0.0000	0.0000	0.0000	0.0000	0.0000	0.0000	0.0000	0.0000	0.0000	0.0000	0.0000	0.0000	0.0000	0.0000	0.0000	0.0000
Vendor	0.0000	0.0000	0.0000	0.0000	0.0000	0.0000	0.0000	0.0000	0.0000	0.0000	0.0000	0.0000	0.0000	0.0000	0.0000	0.0000
Worker	0.0169	0.0126	0.1455	4.4000e-004	0.0458	3.7000e-004	0.0461	0.0122	3.4000e-004	0.0125	0.0000	39.8455	39.8455	1.1000e-003	0.0000	39.8729
Total	**0.0169**	**0.0126**	**0.1455**	**4.4000e-004**	**0.0458**	**3.7000e-004**	**0.0461**	**0.0122**	**3.4000e-004**	**0.0125**	**0.0000**	**39.8455**	**39.8455**	**1.1000e-003**	**0.0000**	**39.8729**

Mitigated Construction On-Site

	ROG	NOx	CO	SO2	Fugitive PM10	Exhaust PM10	PM10 Total	Fugitive PM2.5	Exhaust PM2.5	PM2.5 Total	Bio- CO2	NBio- CO2	Total CO2	CH4	N2O	CO2e
Category	tons/yr										MT/yr					
Archit. Coating	1.3288					0.0000	0.0000		0.0000	0.0000	0.0000	0.0000	0.0000	0.0000	0.0000	0.0000
Off-Road	8.9000e-003	0.0613	0.0789	1.3000e-004		3.5500e-003	3.5500e-003		3.5500e-003	3.5500e-003	0.0000	11.1066	11.1066	7.2000e-004	0.0000	11.1247
Total	**1.3377**	**0.0613**	**0.0789**	**1.3000e-004**		**3.5500e-003**	**3.5500e-003**		**3.5500e-003**	**3.5500e-003**	**0.0000**	**11.1066**	**11.1066**	**7.2000e-004**	**0.0000**	**11.1247**

3.6 Architectural Coating - 2022

Mitigated Construction Off-Site

	ROG	NOx	CO	SO2	Fugitive PM10	Exhaust PM10	PM10 Total	Fugitive PM2.5	Exhaust PM2.5	PM2.5 Total	Bio- CO2	NBio- CO2	Total CO2	CH4	N2O	CO2e
Category	tons/yr										MT/yr					
Hauling	0.0000	0.0000	0.0000	0.0000	0.0000	0.0000	0.0000	0.0000	0.0000	0.0000	0.0000	0.0000	0.0000	0.0000	0.0000	0.0000
Vendor	0.0000	0.0000	0.0000	0.0000	0.0000	0.0000	0.0000	0.0000	0.0000	0.0000	0.0000	0.0000	0.0000	0.0000	0.0000	0.0000
Worker	0.0169	0.0126	0.1455	4.4000e-004	0.0458	3.7000e-004	0.0461	0.0122	3.4000e-004	0.0125	0.0000	39.8455	39.8455	1.1000e-003	0.0000	39.8729
Total	**0.0169**	**0.0126**	**0.1455**	**4.4000e-004**	**0.0458**	**3.7000e-004**	**0.0461**	**0.0122**	**3.4000e-004**	**0.0125**	**0.0000**	**39.8455**	**39.8455**	**1.1000e-003**	**0.0000**	**39.8729**

3.6 Architectural Coating - 2023

Unmitigated Construction On-Site

	ROG	NOx	CO	SO2	Fugitive PM10	Exhaust PM10	PM10 Total	Fugitive PM2.5	Exhaust PM2.5	PM2.5 Total	Bio- CO2	NBio- CO2	Total CO2	CH4	N2O	CO2e
Category	tons/yr										MT/yr					
Archit. Coating	1.2677					0.0000	0.0000		0.0000	0.0000	0.0000	0.0000	0.0000	0.0000	0.0000	0.0000
Off-Road	7.9500e-003	0.0541	0.0752	1.2000e-004		2.9400e-003	2.9400e-003		2.9400e-003	2.9400e-003	0.0000	10.5960	10.5960	6.3000e-004	0.0000	10.6119
Total	**1.2756**	**0.0541**	**0.0752**	**1.2000e-004**		**2.9400e-003**	**2.9400e-003**		**2.9400e-003**	**2.9400e-003**	**0.0000**	**10.5960**	**10.5960**	**6.3000e-004**	**0.0000**	**10.6119**

3.6 Architectural Coating - 2023

Unmitigated Construction Off-Site

	ROG	NOx	CO	SO2	Fugitive PM10	Exhaust PM10	PM10 Total	Fugitive PM2.5	Exhaust PM2.5	PM2.5 Total	Bio- CO2	NBio- CO2	Total CO2	CH4	N2O	CO2e
Category	tons/yr										MT/yr					
Hauling	0.0000	0.0000	0.0000	0.0000	0.0000	0.0000	0.0000	0.0000	0.0000	0.0000	0.0000	0.0000	0.0000	0.0000	0.0000	0.0000
Vendor	0.0000	0.0000	0.0000	0.0000	0.0000	0.0000	0.0000	0.0000	0.0000	0.0000	0.0000	0.0000	0.0000	0.0000	0.0000	0.0000
Worker	0.0151	0.0109	0.1277	4.0000e-004	0.0437	3.4000e-004	0.0440	0.0116	3.1000e-004	0.0119	0.0000	36.6225	36.6225	9.4000e-004	0.0000	36.6461
Total	**0.0151**	**0.0109**	**0.1277**	**4.0000e-004**	**0.0437**	**3.4000e-004**	**0.0440**	**0.0116**	**3.1000e-004**	**0.0119**	**0.0000**	**36.6225**	**36.6225**	**9.4000e-004**	**0.0000**	**36.6461**

Mitigated Construction On-Site

	ROG	NOx	CO	SO2	Fugitive PM10	Exhaust PM10	PM10 Total	Fugitive PM2.5	Exhaust PM2.5	PM2.5 Total	Bio- CO2	NBio- CO2	Total CO2	CH4	N2O	CO2e
Category	tons/yr										MT/yr					
Archit. Coating	1.2677					0.0000	0.0000		0.0000	0.0000	0.0000	0.0000	0.0000	0.0000	0.0000	0.0000
Off-Road	7.9500e-003	0.0541	0.0752	1.2000e-004		2.9400e-003	2.9400e-003		2.9400e-003	2.9400e-003	0.0000	10.5960	10.5960	6.3000e-004	0.0000	10.6118
Total	**1.2756**	**0.0541**	**0.0752**	**1.2000e-004**		**2.9400e-003**	**2.9400e-003**		**2.9400e-003**	**2.9400e-003**	**0.0000**	**10.5960**	**10.5960**	**6.3000e-004**	**0.0000**	**10.6118**

3.6 Architectural Coating - 2023

Mitigated Construction Off-Site

	ROG	NOx	CO	SO2	Fugitive PM10	Exhaust PM10	PM10 Total	Fugitive PM2.5	Exhaust PM2.5	PM2.5 Total	Bio- CO2	NBio- CO2	Total CO2	CH4	N2O	CO2e
Category	tons/yr										MT/yr					
Hauling	0.0000	0.0000	0.0000	0.0000	0.0000	0.0000	0.0000	0.0000	0.0000	0.0000	0.0000	0.0000	0.0000	0.0000	0.0000	0.0000
Vendor	0.0000	0.0000	0.0000	0.0000	0.0000	0.0000	0.0000	0.0000	0.0000	0.0000	0.0000	0.0000	0.0000	0.0000	0.0000	0.0000
Worker	0.0151	0.0109	0.1277	4.0000e-004	0.0437	3.4000e-004	0.0440	0.0116	3.1000e-004	0.0119	0.0000	36.6225	36.6225	9.4000e-004	0.0000	36.6461
Total	**0.0151**	**0.0109**	**0.1277**	**4.0000e-004**	**0.0437**	**3.4000e-004**	**0.0440**	**0.0116**	**3.1000e-004**	**0.0119**	**0.0000**	**36.6225**	**36.6225**	**9.4000e-004**	**0.0000**	**36.6461**

4.0 Operational Detail - Mobile

4.1 Mitigation Measures Mobile

	ROG	NOx	CO	SO2	Fugitive PM10	Exhaust PM10	PM10 Total	Fugitive PM2.5	Exhaust PM2.5	PM2.5 Total	Bio- CO2	NBio- CO2	Total CO2	CH4	N2O	CO2e
Category	tons/yr										MT/yr					
Mitigated	0.6701	10.9104	10.6989	0.0711	4.6581	0.0396	4.6976	1.2589	0.0370	1.2959	0.0000	6,740.9512	6,740.9512	0.2794	0.0000	6,747.9356
Unmitigated	0.6701	10.9104	10.6989	0.0711	4.6581	0.0396	4.6976	1.2589	0.0370	1.2959	0.0000	6,740.9512	6,740.9512	0.2794	0.0000	6,747.9356

4.2 Trip Summary Information

	Average Daily Trip Rate			Unmitigated	Mitigated
Land Use	Weekday	Saturday	Sunday	Annual VMT	Annual VMT
City Park	0.00	0.00	0.00		
General Light Industry	2,706.87	2,706.87	2706.87	11,986,773	11,986,773
Parking Lot	0.00	0.00	0.00		
Total	2,706.87	2,706.87	2,706.87	11,986,773	11,986,773

4.3 Trip Type Information

	Miles			Trip %			Trip Purpose %		
Land Use	H-W or C-W	H-S or C-C	H-O or C-NW	H-W or C-W	H-S or C-C	H-O or C-NW	Primary	Diverted	Pass-by
City Park	16.60	8.40	6.90	33.00	48.00	19.00	66	28	6
General Light Industry	16.60	8.40	6.90	59.00	28.00	13.00	92	5	3
Parking Lot	16.60	8.40	6.90	0.00	0.00	0.00	0	0	0

4.4 Fleet Mix

Land Use	LDA	LDT1	LDT2	MDV	LHD1	LHD2	MHD	HHD	OBUS	UBUS	MCY	SBUS	MH
City Park	0.786000	0.000000	0.000000	0.000000	0.000000	0.000000	0.080000	0.134000	0.000000	0.000000	0.000000	0.000000	0.000000
General Light Industry	0.786000	0.000000	0.000000	0.000000	0.000000	0.000000	0.080000	0.134000	0.000000	0.000000	0.000000	0.000000	0.000000
Parking Lot	0.786000	0.000000	0.000000	0.000000	0.000000	0.000000	0.080000	0.134000	0.000000	0.000000	0.000000	0.000000	0.000000

5.0 Energy Detail

Historical Energy Use: N

5.1 Mitigation Measures Energy

	ROG	NOx	CO	SO2	Fugitive PM10	Exhaust PM10	PM10 Total	Fugitive PM2.5	Exhaust PM2.5	PM2.5 Total	Bio- CO2	NBio- CO2	Total CO2	CH4	N2O	CO2e
Category	tons/yr										MT/yr					
Electricity Mitigated						0.0000	0.0000		0.0000	0.0000	0.0000	1,501.7411	1,501.7411	0.0819	0.0169	1,508.8382
Electricity Unmitigated						0.0000	0.0000		0.0000	0.0000	0.0000	1,501.7411	1,501.7411	0.0819	0.0169	1,508.8382
NaturalGas Mitigated	0.0533	0.4842	0.4067	2.9100e-003		0.0368	0.0368		0.0368	0.0368	0.0000	527.1220	527.1220	0.0101	9.6600e-003	530.2545
NaturalGas Unmitigated	0.0533	0.4842	0.4067	2.9100e-003		0.0368	0.0368		0.0368	0.0368	0.0000	527.1220	527.1220	0.0101	9.6600e-003	530.2545

5.2 Energy by Land Use - NaturalGas

Unmitigated

	NaturalGas Use	ROG	NOx	CO	SO2	Fugitive PM10	Exhaust PM10	PM10 Total	Fugitive PM2.5	Exhaust PM2.5	PM2.5 Total	Bio- CO2	NBio- CO2	Total CO2	CH4	N2O	CO2e
Land Use	kBTU/yr	tons/yr										MT/yr					
City Park	0	0.0000	0.0000	0.0000	0.0000		0.0000	0.0000		0.0000	0.0000	0.0000	0.0000	0.0000	0.0000	0.0000	0.0000
General Light Industry	9.87789e+006	0.0533	0.4842	0.4067	2.9100e-003		0.0368	0.0368		0.0368	0.0368	0.0000	527.1220	527.1220	0.0101	9.6600e-003	530.2545
Parking Lot	0	0.0000	0.0000	0.0000	0.0000		0.0000	0.0000		0.0000	0.0000	0.0000	0.0000	0.0000	0.0000	0.0000	0.0000
Total		**0.0533**	**0.4842**	**0.4067**	**2.9100e-003**		**0.0368**	**0.0368**		**0.0368**	**0.0368**	**0.0000**	**527.1220**	**527.1220**	**0.0101**	**9.6600e-003**	**530.2545**

Mitigated

	NaturalGas Use	ROG	NOx	CO	SO2	Fugitive PM10	Exhaust PM10	PM10 Total	Fugitive PM2.5	Exhaust PM2.5	PM2.5 Total	Bio- CO2	NBio- CO2	Total CO2	CH4	N2O	CO2e
Land Use	kBTU/yr	tons/yr										MT/yr					
City Park	0	0.0000	0.0000	0.0000	0.0000		0.0000	0.0000		0.0000	0.0000	0.0000	0.0000	0.0000	0.0000	0.0000	0.0000
General Light Industry	9.87789e+006	0.0533	0.4842	0.4067	2.9100e-003		0.0368	0.0368		0.0368	0.0368	0.0000	527.1220	527.1220	0.0101	9.6600e-003	530.2545
Parking Lot	0	0.0000	0.0000	0.0000	0.0000		0.0000	0.0000		0.0000	0.0000	0.0000	0.0000	0.0000	0.0000	0.0000	0.0000
Total		**0.0533**	**0.4842**	**0.4067**	**2.9100e-003**		**0.0368**	**0.0368**		**0.0368**	**0.0368**	**0.0000**	**527.1220**	**527.1220**	**0.0101**	**9.6600e-003**	**530.2545**

5.3 Energy by Land Use - Electricity

Unmitigated

	Electricity Use	Total CO2	CH4	N2O	CO2e
Land Use	kWh/yr	MT/yr			
City Park	0	0.0000	0.0000	0.0000	0.0000
General Light Industry	6.05771e+006	1,461.1069	0.0797	0.0165	1,468.0120
Parking Lot	168468	40.6342	2.2200e-003	4.6000e-004	40.8262
Total		**1,501.7411**	**0.0819**	**0.0170**	**1,508.8382**

Mitigated

	Electricity Use	Total CO2	CH4	N2O	CO2e
Land Use	kWh/yr	MT/yr			
City Park	0	0.0000	0.0000	0.0000	0.0000
General Light Industry	6.05771e+006	1,461.1069	0.0797	0.0165	1,468.0120
Parking Lot	168468	40.6342	2.2200e-003	4.6000e-004	40.8262
Total		**1,501.7411**	**0.0819**	**0.0170**	**1,508.8382**

6.0 Area Detail

6.1 Mitigation Measures Area

	ROG	NOx	CO	SO2	Fugitive PM10	Exhaust PM10	PM10 Total	Fugitive PM2.5	Exhaust PM2.5	PM2.5 Total	Bio- CO2	NBio- CO2	Total CO2	CH4	N2O	CO2e
Category	tons/yr										MT/yr					
Mitigated	2.2645	6.0000e-005	7.1400e-003	0.0000		3.0000e-005	3.0000e-005		3.0000e-005	3.0000e-005	0.0000	0.0139	0.0139	4.0000e-005	0.0000	0.0148
Unmitigated	2.2645	6.0000e-005	7.1400e-003	0.0000		3.0000e-005	3.0000e-005		3.0000e-005	3.0000e-005	0.0000	0.0139	0.0139	4.0000e-005	0.0000	0.0148

6.2 Area by SubCategory

Unmitigated

	ROG	NOx	CO	SO2	Fugitive PM10	Exhaust PM10	PM10 Total	Fugitive PM2.5	Exhaust PM2.5	PM2.5 Total	Bio- CO2	NBio- CO2	Total CO2	CH4	N2O	CO2e
SubCategory	tons/yr										MT/yr					
Architectural Coating	0.2596					0.0000	0.0000		0.0000	0.0000	0.0000	0.0000	0.0000	0.0000	0.0000	0.0000
Consumer Products	2.0042					0.0000	0.0000		0.0000	0.0000	0.0000	0.0000	0.0000	0.0000	0.0000	0.0000
Landscaping	6.6000e-004	6.0000e-005	7.1400e-003	0.0000		3.0000e-005	3.0000e-005		3.0000e-005	3.0000e-005	0.0000	0.0139	0.0139	4.0000e-005	0.0000	0.0148
Total	**2.2645**	**6.0000e-005**	**7.1400e-003**	**0.0000**		**3.0000e-005**	**3.0000e-005**		**3.0000e-005**	**3.0000e-005**	**0.0000**	**0.0139**	**0.0139**	**4.0000e-005**	**0.0000**	**0.0148**

6.2 Area by SubCategory

Mitigated

	ROG	NOx	CO	SO2	Fugitive PM10	Exhaust PM10	PM10 Total	Fugitive PM2.5	Exhaust PM2.5	PM2.5 Total	Bio- CO2	NBio- CO2	Total CO2	CH4	N2O	CO2e
SubCategory	tons/yr										MT/yr					
Architectural Coating	0.2596					0.0000	0.0000		0.0000	0.0000	0.0000	0.0000	0.0000	0.0000	0.0000	0.0000
Consumer Products	2.0042					0.0000	0.0000		0.0000	0.0000	0.0000	0.0000	0.0000	0.0000	0.0000	0.0000
Landscaping	6.6000e-004	6.0000e-005	7.1400e-003	0.0000		3.0000e-005	3.0000e-005		3.0000e-005	3.0000e-005	0.0000	0.0139	0.0139	4.0000e-005	0.0000	0.0148
Total	**2.2645**	**6.0000e-005**	**7.1400e-003**	**0.0000**		**3.0000e-005**	**3.0000e-005**		**3.0000e-005**	**3.0000e-005**	**0.0000**	**0.0139**	**0.0139**	**4.0000e-005**	**0.0000**	**0.0148**

7.0 Water Detail

7.1 Mitigation Measures Water

	Total CO2	CH4	N2O	CO2e
Category	MT/yr			
Mitigated	444.6633	4.1344	0.1017	578.3191
Unmitigated	444.6633	4.1344	0.1017	578.3191

7.2 Water by Land Use

Unmitigated

	Indoor/Outdoor Use	Total CO2	CH4	N2O	CO2e
Land Use	Mgal	MT/yr			
City Park	0 / 3.08594	8.2694	4.5000e-004	9.0000e-005	8.3085
General Light Industry	126.202 / 0	436.3939	4.1339	0.1016	570.0106
Parking Lot	0 / 0	0.0000	0.0000	0.0000	0.0000
Total		**444.6633**	**4.1344**	**0.1017**	**578.3191**

7.2 Water by Land Use

Mitigated

	Indoor/Outdoor Use	Total CO2	CH4	N2O	CO2e
Land Use	Mgal	MT/yr			
City Park	0 / 3.08594	8.2694	4.5000e-004	9.0000e-005	8.3085
General Light Industry	126.202 / 0	436.3939	4.1339	0.1016	570.0106
Parking Lot	0 / 0	0.0000	0.0000	0.0000	0.0000
Total		**444.6633**	**4.1344**	**0.1017**	**578.3191**

8.0 Waste Detail

8.1 Mitigation Measures Waste

Category/Year

	Total CO2	CH4	N2O	CO2e
	MT/yr			
Mitigated	137.4127	8.1209	0.0000	340.4342
Unmitigated	137.4127	8.1209	0.0000	340.4342

8.2 Waste by Land Use

Unmitigated

	Waste Disposed	Total CO2	CH4	N2O	CO2e
Land Use	tons	MT/yr			
City Park	0.22	0.0447	2.6400e-003	0.0000	0.1106
General Light Industry	676.72	137.3680	8.1182	0.0000	340.3235
Parking Lot	0	0.0000	0.0000	0.0000	0.0000
Total		**137.4127**	**8.1209**	**0.0000**	**340.4342**

8.2 Waste by Land Use

Mitigated

	Waste Disposed	Total CO2	CH4	N2O	CO2e
Land Use	tons	MT/yr			
City Park	0.22	0.0447	2.6400e-003	0.0000	0.1106
General Light Industry	676.72	137.3680	8.1182	0.0000	340.3235
Parking Lot	0	0.0000	0.0000	0.0000	0.0000
Total		**137.4127**	**8.1209**	**0.0000**	**340.4342**

9.0 Operational Offroad

Equipment Type	Number	Hours/Day	Days/Year	Horse Power	Load Factor	Fuel Type

10.0 Stationary Equipment

Fire Pumps and Emergency Generators

Equipment Type	Number	Hours/Day	Hours/Year	Horse Power	Load Factor	Fuel Type

Boilers

Equipment Type	Number	Heat Input/Day	Heat Input/Year	Boiler Rating	Fuel Type

User Defined Equipment

Equipment Type	Number

11.0 Vegetation

Irwindale 5175 Vincent Avenue

Los Angeles-South Coast County, Summer

1.0 Project Characteristics

1.1 Land Usage

Land Uses	Size	Metric	Lot Acreage	Floor Surface Area	Population
General Light Industry	545.74	1000sqft	12.41	545,740.00	0
Parking Lot	11.05	Acre	11.05	481,338.00	0
City Park	2.59	Acre	2.59	112,820.40	0

1.2 Other Project Characteristics

Urbanization	Urban	**Wind Speed (m/s)**	2.2	**Precipitation Freq (Days)**	33
Climate Zone	9			**Operational Year**	2023
Utility Company	Southern California Edison				
CO2 Intensity (lb/MWhr)	531.75	**CH4 Intensity (lb/MWhr)**	0.029	**N2O Intensity (lb/MWhr)**	0.006

1.3 User Entered Comments & Non-Default Data

Irwindale 5175 Vincent Avenue - Los Angeles-South Coast County, Summer

Project Characteristics - Op. year - 2023. CO2 Intensity factor adjusted to reflect RPS value in 2023 (note: CalEEMod default factor is from 2012) - factor reduced by 24.3% based on change in eligible renewables from 22% in 2013 to 41% by 2023.

Land Use - Unit Amounts: Unrefrigerated Warehouse-No Rail: 545,735 sf (on 12.41 acres); Landscaping: 112,749 sf (2.59 acres) Parking: 26.05-2.59-12.41 acres = 11.05 acres for parking. Total lot acreage: 26.05 acres.

Construction Phase - Default construction schedule based on project characteristics (note - architectural coatings phased assumed to also occur during paving and building construction phases).

Off-road Equipment -

Off-road Equipment -

Grading - Balanced soil import/export (from Ken Lee, email dated March 30, 2020). Assume total site is graded (26.05 acres).

Vehicle Trips - Trip rates from Traffic Impact Analysis (Ganddini, 2020): 4.96 trips per thousdand sf.

Energy Use -

Construction Off-road Equipment Mitigation - Reductions include: Water Exposed Area 3 times daily; Unpaved Road Mitigation (Moisture Content at 12%; Vehicle Speed 15 MPH).

Energy Mitigation -

Fleet Mix - Fleet Mix updated to reflect Traffic Study (Ganddini, 2020) - 78.6% Passenger Car; 13.4% Heavy-duty Trucks (3 and 4 axle); 8.0% Medium-duty Trucks (2-axle).

Table Name	Column Name	Default Value	New Value
tblConstDustMitigation	WaterUnpavedRoadMoistureContent	0	12
tblConstDustMitigation	WaterUnpavedRoadVehicleSpeed	0	15
tblConstructionPhase	NumDays	35.00	170.00
tblFleetMix	HHD	0.03	0.13
tblFleetMix	HHD	0.03	0.13
tblFleetMix	HHD	0.03	0.13
tblFleetMix	LDA	0.55	0.79
tblFleetMix	LDA	0.55	0.79
tblFleetMix	LDA	0.55	0.79
tblFleetMix	LDT1	0.04	0.00
tblFleetMix	LDT1	0.04	0.00
tblFleetMix	LDT1	0.04	0.00

tblFleetMix	LDT2	0.21	0.00
tblFleetMix	LDT2	0.21	0.00
tblFleetMix	LDT2	0.21	0.00
tblFleetMix	LHD1	0.02	0.00
tblFleetMix	LHD1	0.02	0.00
tblFleetMix	LHD1	0.02	0.00
tblFleetMix	LHD2	6.2270e-003	0.00
tblFleetMix	LHD2	6.2270e-003	0.00
tblFleetMix	LHD2	6.2270e-003	0.00
tblFleetMix	MCY	5.1840e-003	0.00
tblFleetMix	MCY	5.1840e-003	0.00
tblFleetMix	MCY	5.1840e-003	0.00
tblFleetMix	MDV	0.12	0.00
tblFleetMix	MDV	0.12	0.00
tblFleetMix	MDV	0.12	0.00
tblFleetMix	MH	8.6200e-004	0.00
tblFleetMix	MH	8.6200e-004	0.00
tblFleetMix	MH	8.6200e-004	0.00
tblFleetMix	MHD	0.02	0.08
tblFleetMix	MHD	0.02	0.08
tblFleetMix	MHD	0.02	0.08
tblFleetMix	OBUS	2.5460e-003	0.00
tblFleetMix	OBUS	2.5460e-003	0.00
tblFleetMix	OBUS	2.5460e-003	0.00
tblFleetMix	SBUS	6.9200e-004	0.00
tblFleetMix	SBUS	6.9200e-004	0.00
tblFleetMix	SBUS	6.9200e-004	0.00

tblFleetMix	UBUS	2.1330e-003	0.00
tblFleetMix	UBUS	2.1330e-003	0.00
tblFleetMix	UBUS	2.1330e-003	0.00
tblGrading	AcresOfGrading	112.50	26.05
tblLandUse	LotAcreage	12.53	12.41
tblProjectCharacteristics	CO2IntensityFactor	702.44	531.75
tblVehicleTrips	ST_TR	22.75	0.00
tblVehicleTrips	ST_TR	1.32	4.96
tblVehicleTrips	SU_TR	16.74	0.00
tblVehicleTrips	SU_TR	0.68	4.96
tblVehicleTrips	WD_TR	1.89	0.00
tblVehicleTrips	WD_TR	6.97	4.96

2.0 Emissions Summary

2.1 Overall Construction (Maximum Daily Emission)

Unmitigated Construction

	ROG	NOx	CO	SO2	Fugitive PM10	Exhaust PM10	PM10 Total	Fugitive PM2.5	Exhaust PM2.5	PM2.5 Total	Bio- CO2	NBio- CO2	Total CO2	CH4	N2O	CO2e
Year	lb/day										lb/day					
2021	4.5226	46.4588	40.6145	0.1298	18.2675	2.0461	20.3135	9.9840	1.8824	11.8664	0.0000	13,148.3393	13,148.3393	1.9495	0.0000	13,175.3284
2022	35.2993	35.8202	44.0350	0.1409	7.6244	0.9735	8.5979	2.0492	0.9203	2.9695	0.0000	14,248.8636	14,248.8636	1.0971	0.0000	14,276.2898
2023	34.8746	30.1730	41.7881	0.1370	7.6244	0.8346	8.4590	2.0492	0.7887	2.8379	0.0000	13,857.9983	13,857.9983	1.0410	0.0000	13,884.0239
Maximum	**35.2993**	**46.4588**	**44.0350**	**0.1409**	**18.2675**	**2.0461**	**20.3135**	**9.9840**	**1.8824**	**11.8664**	**0.0000**	**14,248.8636**	**14,248.8636**	**1.9495**	**0.0000**	**14,276.2898**

Mitigated Construction

	ROG	NOx	CO	SO2	Fugitive PM10	Exhaust PM10	PM10 Total	Fugitive PM2.5	Exhaust PM2.5	PM2.5 Total	Bio- CO2	NBio- CO2	Total CO2	CH4	N2O	CO2e
Year	lb/day										lb/day					
2021	4.5226	46.4588	40.6145	0.1298	7.2470	2.0461	9.2931	3.9263	1.8824	5.8087	0.0000	13,148.3393	13,148.3393	1.9495	0.0000	13,175.3284
2022	35.2993	35.8202	44.0350	0.1409	7.6244	0.9735	8.5979	2.0492	0.9203	2.9695	0.0000	14,248.8636	14,248.8636	1.0971	0.0000	14,276.2898
2023	34.8746	30.1730	41.7881	0.1370	7.6244	0.8346	8.4590	2.0492	0.7887	2.8379	0.0000	13,857.9983	13,857.9983	1.0410	0.0000	13,884.0239
Maximum	**35.2993**	**46.4588**	**44.0350**	**0.1409**	**7.6244**	**2.0461**	**9.2931**	**3.9263**	**1.8824**	**5.8087**	**0.0000**	**14,248.8636**	**14,248.8636**	**1.9495**	**0.0000**	**14,276.2898**

Irwindale 5175 Vincent Avenue - Los Angeles-South Coast County, Summer

	ROG	NOx	CO	SO2	Fugitive PM10	Exhaust PM10	PM10 Total	Fugitive PM2.5	Exhaust PM2.5	PM2.5 Total	Bio- CO2	NBio-CO2	Total CO2	CH4	N20	CO2e
Percent Reduction	**0.00**	**0.00**	**0.00**	**0.00**	**32.88**	**0.00**	**29.49**	**43.02**	**0.00**	**34.28**	**0.00**	**0.00**	**0.00**	**0.00**	**0.00**	**0.00**

2.2 Overall Operational

Unmitigated Operational

	ROG	NOx	CO	SO2	Fugitive PM10	Exhaust PM10	PM10 Total	Fugitive PM2.5	Exhaust PM2.5	PM2.5 Total	Bio- CO2	NBio- CO2	Total CO2	CH4	N2O	CO2e
Category	lb/day										lb/day					
Area	12.4100	5.2000e-004	0.0571	0.0000		2.0000e-004	2.0000e-004		2.0000e-004	2.0000e-004		0.1224	0.1224	3.2000e-004		0.1305
Energy	0.2919	2.6532	2.2287	0.0159		0.2016	0.2016		0.2016	0.2016		3,183.8498	3,183.8498	0.0610	0.0584	3,202.7698
Mobile	3.8282	58.6167	61.0560	0.4001	26.0859	0.2163	26.3022	7.0380	0.2024	7.2404		41,790.6029	41,790.6029	1.6839		41,832.7008
Total	**16.5300**	**61.2704**	**63.3418**	**0.4160**	**26.0859**	**0.4182**	**26.5041**	**7.0380**	**0.4042**	**7.4422**		**44,974.5751**	**44,974.5751**	**1.7453**	**0.0584**	**45,035.6011**

Mitigated Operational

	ROG	NOx	CO	SO2	Fugitive PM10	Exhaust PM10	PM10 Total	Fugitive PM2.5	Exhaust PM2.5	PM2.5 Total	Bio- CO2	NBio- CO2	Total CO2	CH4	N2O	CO2e
Category	lb/day										lb/day					
Area	12.4100	5.2000e-004	0.0571	0.0000		2.0000e-004	2.0000e-004		2.0000e-004	2.0000e-004		0.1224	0.1224	3.2000e-004		0.1305
Energy	0.2919	2.6532	2.2287	0.0159		0.2016	0.2016		0.2016	0.2016		3,183.8498	3,183.8498	0.0610	0.0584	3,202.7698
Mobile	3.8282	58.6167	61.0560	0.4001	26.0859	0.2163	26.3022	7.0380	0.2024	7.2404		41,790.6029	41,790.6029	1.6839		41,832.7008
Total	**16.5300**	**61.2704**	**63.3418**	**0.4160**	**26.0859**	**0.4182**	**26.5041**	**7.0380**	**0.4042**	**7.4422**		**44,974.5751**	**44,974.5751**	**1.7453**	**0.0584**	**45,035.6011**

	ROG	NOx	CO	SO2	Fugitive PM10	Exhaust PM10	PM10 Total	Fugitive PM2.5	Exhaust PM2.5	PM2.5 Total	Bio- CO2	NBio-CO2	Total CO2	CH4	N20	CO2e
Percent Reduction	**0.00**	**0.00**	**0.00**	**0.00**	**0.00**	**0.00**	**0.00**	**0.00**	**0.00**	**0.00**	**0.00**	**0.00**	**0.00**	**0.00**	**0.00**	**0.00**

3.0 Construction Detail

Construction Phase

Phase Number	Phase Name	Phase Type	Start Date	End Date	Num Days Week	Num Days	Phase Description
1	Site Preparation	Site Preparation	4/1/2021	4/28/2021	5	20	
2	Grading	Grading	4/29/2021	6/30/2021	5	45	
3	Building Construction	Building Construction	7/1/2021	3/8/2023	5	440	
4	Paving	Paving	3/9/2023	4/26/2023	5	35	
5	Architectural Coating	Architectural Coating	9/1/2022	4/26/2023	5	170	

Acres of Grading (Site Preparation Phase): 0

Acres of Grading (Grading Phase): 26.05

Acres of Paving: 11.05

Residential Indoor: 0; Residential Outdoor: 0; Non-Residential Indoor: 818,610; Non-Residential Outdoor: 272,870; Striped Parking Area: 28,880 (Architectural Coating – sqft)

OffRoad Equipment

Phase Name	Offroad Equipment Type	Amount	Usage Hours	Horse Power	Load Factor
Site Preparation	Rubber Tired Dozers	3	8.00	247	0.40
Site Preparation	Tractors/Loaders/Backhoes	4	8.00	97	0.37
Grading	Excavators	2	8.00	158	0.38
Grading	Graders	1	8.00	187	0.41
Grading	Rubber Tired Dozers	1	8.00	247	0.40
Grading	Scrapers	2	8.00	367	0.48
Grading	Tractors/Loaders/Backhoes	2	8.00	97	0.37
Building Construction	Cranes	1	7.00	231	0.29
Building Construction	Forklifts	3	8.00	89	0.20
Building Construction	Generator Sets	1	8.00	84	0.74
Building Construction	Tractors/Loaders/Backhoes	3	7.00	97	0.37
Building Construction	Welders	1	8.00	46	0.45
Architectural Coating	Air Compressors	1	6.00	78	0.48
Paving	Pavers	2	8.00	130	0.42
Paving	Paving Equipment	2	8.00	132	0.36
Paving	Rollers	2	8.00	80	0.38

Trips and VMT

Phase Name	Offroad Equipment Count	Worker Trip Number	Vendor Trip Number	Hauling Trip Number	Worker Trip Length	Vendor Trip Length	Hauling Trip Length	Worker Vehicle Class	Vendor Vehicle Class	Hauling Vehicle Class
Site Preparation	7	18.00	0.00	0.00	14.70	6.90	20.00	LD_Mix	HDT_Mix	HHDT
Grading	8	20.00	0.00	0.00	14.70	6.90	20.00	LD_Mix	HDT_Mix	HHDT
Building Construction	9	479.00	187.00	0.00	14.70	6.90	20.00	LD_Mix	HDT_Mix	HHDT
Architectural Coating	1	96.00	0.00	0.00	14.70	6.90	20.00	LD_Mix	HDT_Mix	HHDT
Paving	6	15.00	0.00	0.00	14.70	6.90	20.00	LD_Mix	HDT_Mix	HHDT

3.1 Mitigation Measures Construction

Water Exposed Area

Water Unpaved Roads

Reduce Vehicle Speed on Unpaved Roads

3.2 Site Preparation - 2021

Unmitigated Construction On-Site

	ROG	NOx	CO	SO2	Fugitive PM10	Exhaust PM10	PM10 Total	Fugitive PM2.5	Exhaust PM2.5	PM2.5 Total	Bio- CO2	NBio- CO2	Total CO2	CH4	N2O	CO2e
Category	lb/day										lb/day					
Fugitive Dust					18.0663	0.0000	18.0663	9.9307	0.0000	9.9307			0.0000			0.0000
Off-Road	3.8882	40.4971	21.1543	0.0380		2.0445	2.0445		1.8809	1.8809		3,685.6569	3,685.6569	1.1920		3,715.4573
Total	**3.8882**	**40.4971**	**21.1543**	**0.0380**	**18.0663**	**2.0445**	**20.1107**	**9.9307**	**1.8809**	**11.8116**		**3,685.6569**	**3,685.6569**	**1.1920**		**3,715.4573**

3.2 Site Preparation - 2021

Unmitigated Construction Off-Site

	ROG	NOx	CO	SO2	Fugitive PM10	Exhaust PM10	PM10 Total	Fugitive PM2.5	Exhaust PM2.5	PM2.5 Total	Bio- CO2	NBio- CO2	Total CO2	CH4	N2O	CO2e
Category	lb/day										lb/day					
Hauling	0.0000	0.0000	0.0000	0.0000	0.0000	0.0000	0.0000	0.0000	0.0000	0.0000		0.0000	0.0000	0.0000		0.0000
Vendor	0.0000	0.0000	0.0000	0.0000	0.0000	0.0000	0.0000	0.0000	0.0000	0.0000		0.0000	0.0000	0.0000		0.0000
Worker	0.0772	0.0530	0.7250	2.0600e-003	0.2012	1.6300e-003	0.2028	0.0534	1.5000e-003	0.0549		204.9786	204.9786	6.0400e-003		205.1296
Total	**0.0772**	**0.0530**	**0.7250**	**2.0600e-003**	**0.2012**	**1.6300e-003**	**0.2028**	**0.0534**	**1.5000e-003**	**0.0549**		**204.9786**	**204.9786**	**6.0400e-003**		**205.1296**

Mitigated Construction On-Site

	ROG	NOx	CO	SO2	Fugitive PM10	Exhaust PM10	PM10 Total	Fugitive PM2.5	Exhaust PM2.5	PM2.5 Total	Bio- CO2	NBio- CO2	Total CO2	CH4	N2O	CO2e
Category	lb/day										lb/day					
Fugitive Dust					7.0458	0.0000	7.0458	3.8730	0.0000	3.8730			0.0000			0.0000
Off-Road	3.8882	40.4971	21.1543	0.0380		2.0445	2.0445		1.8809	1.8809	0.0000	3,685.6569	3,685.6569	1.1920		3,715.4573
Total	**3.8882**	**40.4971**	**21.1543**	**0.0380**	**7.0458**	**2.0445**	**9.0903**	**3.8730**	**1.8809**	**5.7539**	**0.0000**	**3,685.6569**	**3,685.6569**	**1.1920**		**3,715.4573**

3.2 Site Preparation - 2021

Mitigated Construction Off-Site

	ROG	NOx	CO	SO2	Fugitive PM10	Exhaust PM10	PM10 Total	Fugitive PM2.5	Exhaust PM2.5	PM2.5 Total	Bio- CO2	NBio- CO2	Total CO2	CH4	N2O	CO2e
Category	lb/day										lb/day					
Hauling	0.0000	0.0000	0.0000	0.0000	0.0000	0.0000	0.0000	0.0000	0.0000	0.0000		0.0000	0.0000	0.0000		0.0000
Vendor	0.0000	0.0000	0.0000	0.0000	0.0000	0.0000	0.0000	0.0000	0.0000	0.0000		0.0000	0.0000	0.0000		0.0000
Worker	0.0772	0.0530	0.7250	2.0600e-003	0.2012	1.6300e-003	0.2028	0.0534	1.5000e-003	0.0549		204.9786	204.9786	6.0400e-003		205.1296
Total	**0.0772**	**0.0530**	**0.7250**	**2.0600e-003**	**0.2012**	**1.6300e-003**	**0.2028**	**0.0534**	**1.5000e-003**	**0.0549**		**204.9786**	**204.9786**	**6.0400e-003**		**205.1296**

3.3 Grading - 2021

Unmitigated Construction On-Site

	ROG	NOx	CO	SO2	Fugitive PM10	Exhaust PM10	PM10 Total	Fugitive PM2.5	Exhaust PM2.5	PM2.5 Total	Bio- CO2	NBio- CO2	Total CO2	CH4	N2O	CO2e
Category	lb/day										lb/day					
Fugitive Dust					6.6360	0.0000	6.6360	3.3765	0.0000	3.3765			0.0000			0.0000
Off-Road	4.1912	46.3998	30.8785	0.0620		1.9853	1.9853		1.8265	1.8265		6,007.0434	6,007.0434	1.9428		6,055.6134
Total	**4.1912**	**46.3998**	**30.8785**	**0.0620**	**6.6360**	**1.9853**	**8.6213**	**3.3765**	**1.8265**	**5.2030**		**6,007.0434**	**6,007.0434**	**1.9428**		**6,055.6134**

3.3 Grading - 2021

Unmitigated Construction Off-Site

	ROG	NOx	CO	SO2	Fugitive PM10	Exhaust PM10	PM10 Total	Fugitive PM2.5	Exhaust PM2.5	PM2.5 Total	Bio- CO2	NBio- CO2	Total CO2	CH4	N2O	CO2e
Category	lb/day										lb/day					
Hauling	0.0000	0.0000	0.0000	0.0000	0.0000	0.0000	0.0000	0.0000	0.0000	0.0000		0.0000	0.0000	0.0000		0.0000
Vendor	0.0000	0.0000	0.0000	0.0000	0.0000	0.0000	0.0000	0.0000	0.0000	0.0000		0.0000	0.0000	0.0000		0.0000
Worker	0.0857	0.0589	0.8056	2.2900e-003	0.2236	1.8100e-003	0.2254	0.0593	1.6600e-003	0.0610		227.7540	227.7540	6.7100e-003		227.9217
Total	**0.0857**	**0.0589**	**0.8056**	**2.2900e-003**	**0.2236**	**1.8100e-003**	**0.2254**	**0.0593**	**1.6600e-003**	**0.0610**		**227.7540**	**227.7540**	**6.7100e-003**		**227.9217**

Mitigated Construction On-Site

	ROG	NOx	CO	SO2	Fugitive PM10	Exhaust PM10	PM10 Total	Fugitive PM2.5	Exhaust PM2.5	PM2.5 Total	Bio- CO2	NBio- CO2	Total CO2	CH4	N2O	CO2e
Category	lb/day										lb/day					
Fugitive Dust					2.5880	0.0000	2.5880	1.3168	0.0000	1.3168			0.0000			0.0000
Off-Road	4.1912	46.3998	30.8785	0.0620		1.9853	1.9853		1.8265	1.8265	0.0000	6,007.0434	6,007.0434	1.9428		6,055.6134
Total	**4.1912**	**46.3998**	**30.8785**	**0.0620**	**2.5880**	**1.9853**	**4.5734**	**1.3168**	**1.8265**	**3.1434**	**0.0000**	**6,007.0434**	**6,007.0434**	**1.9428**		**6,055.6134**

3.3 Grading - 2021

Mitigated Construction Off-Site

	ROG	NOx	CO	SO2	Fugitive PM10	Exhaust PM10	PM10 Total	Fugitive PM2.5	Exhaust PM2.5	PM2.5 Total	Bio- CO2	NBio- CO2	Total CO2	CH4	N2O	CO2e
Category	lb/day										lb/day					
Hauling	0.0000	0.0000	0.0000	0.0000	0.0000	0.0000	0.0000	0.0000	0.0000	0.0000		0.0000	0.0000	0.0000		0.0000
Vendor	0.0000	0.0000	0.0000	0.0000	0.0000	0.0000	0.0000	0.0000	0.0000	0.0000		0.0000	0.0000	0.0000		0.0000
Worker	0.0857	0.0589	0.8056	2.2900e-003	0.2236	1.8100e-003	0.2254	0.0593	1.6600e-003	0.0610		227.7540	227.7540	6.7100e-003		227.9217
Total	**0.0857**	**0.0589**	**0.8056**	**2.2900e-003**	**0.2236**	**1.8100e-003**	**0.2254**	**0.0593**	**1.6600e-003**	**0.0610**		**227.7540**	**227.7540**	**6.7100e-003**		**227.9217**

3.4 Building Construction - 2021

Unmitigated Construction On-Site

	ROG	NOx	CO	SO2	Fugitive PM10	Exhaust PM10	PM10 Total	Fugitive PM2.5	Exhaust PM2.5	PM2.5 Total	Bio- CO2	NBio- CO2	Total CO2	CH4	N2O	CO2e
Category	lb/day										lb/day					
Off-Road	1.9009	17.4321	16.5752	0.0269		0.9586	0.9586		0.9013	0.9013		2,553.3639	2,553.3639	0.6160		2,568.7643
Total	**1.9009**	**17.4321**	**16.5752**	**0.0269**		**0.9586**	**0.9586**		**0.9013**	**0.9013**		**2,553.3639**	**2,553.3639**	**0.6160**		**2,568.7643**

3.4 Building Construction - 2021

Unmitigated Construction Off-Site

	ROG	NOx	CO	SO2	Fugitive PM10	Exhaust PM10	PM10 Total	Fugitive PM2.5	Exhaust PM2.5	PM2.5 Total	Bio- CO2	NBio- CO2	Total CO2	CH4	N2O	CO2e
Category	lb/day										lb/day					
Hauling	0.0000	0.0000	0.0000	0.0000	0.0000	0.0000	0.0000	0.0000	0.0000	0.0000		0.0000	0.0000	0.0000		0.0000
Vendor	0.5684	18.1557	4.7464	0.0481	1.1972	0.0371	1.2343	0.3447	0.0355	0.3802		5,140.2678	5,140.2678	0.3028		5,147.8385
Worker	2.0533	1.4113	19.2929	0.0548	5.3541	0.0433	5.3974	1.4199	0.0399	1.4598		5,454.7076	5,454.7076	0.1607		5,458.7257
Total	**2.6217**	**19.5671**	**24.0393**	**0.1029**	**6.5513**	**0.0804**	**6.6317**	**1.7646**	**0.0754**	**1.8400**		**10,594.9754**	**10,594.9754**	**0.4636**		**10,606.5641**

Mitigated Construction On-Site

	ROG	NOx	CO	SO2	Fugitive PM10	Exhaust PM10	PM10 Total	Fugitive PM2.5	Exhaust PM2.5	PM2.5 Total	Bio- CO2	NBio- CO2	Total CO2	CH4	N2O	CO2e
Category	lb/day										lb/day					
Off-Road	1.9009	17.4321	16.5752	0.0269		0.9586	0.9586		0.9013	0.9013	0.0000	2,553.3639	2,553.3639	0.6160		2,568.7643
Total	**1.9009**	**17.4321**	**16.5752**	**0.0269**		**0.9586**	**0.9586**		**0.9013**	**0.9013**	**0.0000**	**2,553.3639**	**2,553.3639**	**0.6160**		**2,568.7643**

3.4 Building Construction - 2021

Mitigated Construction Off-Site

	ROG	NOx	CO	SO2	Fugitive PM10	Exhaust PM10	PM10 Total	Fugitive PM2.5	Exhaust PM2.5	PM2.5 Total	Bio- CO2	NBio- CO2	Total CO2	CH4	N2O	CO2e
Category	lb/day										lb/day					
Hauling	0.0000	0.0000	0.0000	0.0000	0.0000	0.0000	0.0000	0.0000	0.0000	0.0000		0.0000	0.0000	0.0000		0.0000
Vendor	0.5684	18.1557	4.7464	0.0481	1.1972	0.0371	1.2343	0.3447	0.0355	0.3802		5,140.2678	5,140.2678	0.3028		5,147.8385
Worker	2.0533	1.4113	19.2929	0.0548	5.3541	0.0433	5.3974	1.4199	0.0399	1.4598		5,454.7076	5,454.7076	0.1607		5,458.7257
Total	**2.6217**	**19.5671**	**24.0393**	**0.1029**	**6.5513**	**0.0804**	**6.6317**	**1.7646**	**0.0754**	**1.8400**		**10,594.9754**	**10,594.9754**	**0.4636**		**10,606.5641**

3.4 Building Construction - 2022

Unmitigated Construction On-Site

	ROG	NOx	CO	SO2	Fugitive PM10	Exhaust PM10	PM10 Total	Fugitive PM2.5	Exhaust PM2.5	PM2.5 Total	Bio- CO2	NBio- CO2	Total CO2	CH4	N2O	CO2e
Category	lb/day										lb/day					
Off-Road	1.7062	15.6156	16.3634	0.0269		0.8090	0.8090		0.7612	0.7612		2,554.3336	2,554.3336	0.6120		2,569.6322
Total	**1.7062**	**15.6156**	**16.3634**	**0.0269**		**0.8090**	**0.8090**		**0.7612**	**0.7612**		**2,554.3336**	**2,554.3336**	**0.6120**		**2,569.6322**

3.4 Building Construction - 2022

Unmitigated Construction Off-Site

	ROG	NOx	CO	SO2	Fugitive PM10	Exhaust PM10	PM10 Total	Fugitive PM2.5	Exhaust PM2.5	PM2.5 Total	Bio- CO2	NBio- CO2	Total CO2	CH4	N2O	CO2e
Category	lb/day										lb/day					
Hauling	0.0000	0.0000	0.0000	0.0000	0.0000	0.0000	0.0000	0.0000	0.0000	0.0000		0.0000	0.0000	0.0000		0.0000
Vendor	0.5335	17.2658	4.4908	0.0476	1.1972	0.0325	1.2297	0.3447	0.0310	0.3757		5,095.4861	5,095.4861	0.2924		5,102.7964
Worker	1.9233	1.2748	17.7998	0.0528	5.3541	0.0419	5.3960	1.4199	0.0386	1.4585		5,262.8320	5,262.8320	0.1453		5,266.4634
Total	**2.4568**	**18.5406**	**22.2906**	**0.1005**	**6.5513**	**0.0744**	**6.6257**	**1.7646**	**0.0696**	**1.8343**		**10,358.3181**	**10,358.3181**	**0.4377**		**10,369.2598**

Mitigated Construction On-Site

	ROG	NOx	CO	SO2	Fugitive PM10	Exhaust PM10	PM10 Total	Fugitive PM2.5	Exhaust PM2.5	PM2.5 Total	Bio- CO2	NBio- CO2	Total CO2	CH4	N2O	CO2e
Category	lb/day										lb/day					
Off-Road	1.7062	15.6156	16.3634	0.0269		0.8090	0.8090		0.7612	0.7612	0.0000	2,554.3336	2,554.3336	0.6120		2,569.6322
Total	**1.7062**	**15.6156**	**16.3634**	**0.0269**		**0.8090**	**0.8090**		**0.7612**	**0.7612**	**0.0000**	**2,554.3336**	**2,554.3336**	**0.6120**		**2,569.6322**

3.4 Building Construction - 2022

Mitigated Construction Off-Site

	ROG	NOx	CO	SO2	Fugitive PM10	Exhaust PM10	PM10 Total	Fugitive PM2.5	Exhaust PM2.5	PM2.5 Total	Bio- CO2	NBio- CO2	Total CO2	CH4	N2O	CO2e
Category	lb/day										lb/day					
Hauling	0.0000	0.0000	0.0000	0.0000	0.0000	0.0000	0.0000	0.0000	0.0000	0.0000		0.0000	0.0000	0.0000		0.0000
Vendor	0.5335	17.2658	4.4908	0.0476	1.1972	0.0325	1.2297	0.3447	0.0310	0.3757		5,095.4861	5,095.4861	0.2924		5,102.7964
Worker	1.9233	1.2748	17.7998	0.0528	5.3541	0.0419	5.3960	1.4199	0.0386	1.4585		5,262.8320	5,262.8320	0.1453		5,266.4634
Total	**2.4568**	**18.5406**	**22.2906**	**0.1005**	**6.5513**	**0.0744**	**6.6257**	**1.7646**	**0.0696**	**1.8343**		**10,358.3181**	**10,358.3181**	**0.4377**		**10,369.2598**

3.4 Building Construction - 2023

Unmitigated Construction On-Site

	ROG	NOx	CO	SO2	Fugitive PM10	Exhaust PM10	PM10 Total	Fugitive PM2.5	Exhaust PM2.5	PM2.5 Total	Bio- CO2	NBio- CO2	Total CO2	CH4	N2O	CO2e
Category	lb/day										lb/day					
Off-Road	1.5728	14.3849	16.2440	0.0269		0.6997	0.6997		0.6584	0.6584		2,555.2099	2,555.2099	0.6079		2,570.4061
Total	**1.5728**	**14.3849**	**16.2440**	**0.0269**		**0.6997**	**0.6997**		**0.6584**	**0.6584**		**2,555.2099**	**2,555.2099**	**0.6079**		**2,570.4061**

3.4 Building Construction - 2023

Unmitigated Construction Off-Site

	ROG	NOx	CO	SO2	Fugitive PM10	Exhaust PM10	PM10 Total	Fugitive PM2.5	Exhaust PM2.5	PM2.5 Total	Bio- CO2	NBio- CO2	Total CO2	CH4	N2O	CO2e
Category	lb/day										lb/day					
Hauling	0.0000	0.0000	0.0000	0.0000	0.0000	0.0000	0.0000	0.0000	0.0000	0.0000		0.0000	0.0000	0.0000		0.0000
Vendor	0.3958	13.1006	4.0557	0.0461	1.1973	0.0151	1.2124	0.3447	0.0145	0.3592		4,935.0689	4,935.0689	0.2591		4,941.5470
Worker	1.8061	1.1534	16.3920	0.0509	5.3541	0.0407	5.3948	1.4199	0.0375	1.4574		5,070.1287	5,070.1287	0.1310		5,073.4029
Total	**2.2019**	**14.2540**	**20.4477**	**0.0969**	**6.5514**	**0.0559**	**6.6072**	**1.7647**	**0.0520**	**1.8166**		**10,005.1976**	**10,005.1976**	**0.3901**		**10,014.9499**

Mitigated Construction On-Site

	ROG	NOx	CO	SO2	Fugitive PM10	Exhaust PM10	PM10 Total	Fugitive PM2.5	Exhaust PM2.5	PM2.5 Total	Bio- CO2	NBio- CO2	Total CO2	CH4	N2O	CO2e
Category	lb/day										lb/day					
Off-Road	1.5728	14.3849	16.2440	0.0269		0.6997	0.6997		0.6584	0.6584	0.0000	2,555.2099	2,555.2099	0.6079		2,570.4061
Total	**1.5728**	**14.3849**	**16.2440**	**0.0269**		**0.6997**	**0.6997**		**0.6584**	**0.6584**	**0.0000**	**2,555.2099**	**2,555.2099**	**0.6079**		**2,570.4061**

3.4 Building Construction - 2023

Mitigated Construction Off-Site

	ROG	NOx	CO	SO2	Fugitive PM10	Exhaust PM10	PM10 Total	Fugitive PM2.5	Exhaust PM2.5	PM2.5 Total	Bio- CO2	NBio- CO2	Total CO2	CH4	N2O	CO2e
Category	lb/day										lb/day					
Hauling	0.0000	0.0000	0.0000	0.0000	0.0000	0.0000	0.0000	0.0000	0.0000	0.0000		0.0000	0.0000	0.0000		0.0000
Vendor	0.3958	13.1006	4.0557	0.0461	1.1973	0.0151	1.2124	0.3447	0.0145	0.3592		4,935.0689	4,935.0689	0.2591		4,941.5470
Worker	1.8061	1.1534	16.3920	0.0509	5.3541	0.0407	5.3948	1.4199	0.0375	1.4574		5,070.1287	5,070.1287	0.1310		5,073.4029
Total	**2.2019**	**14.2540**	**20.4477**	**0.0969**	**6.5514**	**0.0559**	**6.6072**	**1.7647**	**0.0520**	**1.8166**		**10,005.1976**	**10,005.1976**	**0.3901**		**10,014.9499**

3.5 Paving - 2023

Unmitigated Construction On-Site

	ROG	NOx	CO	SO2	Fugitive PM10	Exhaust PM10	PM10 Total	Fugitive PM2.5	Exhaust PM2.5	PM2.5 Total	Bio- CO2	NBio- CO2	Total CO2	CH4	N2O	CO2e
Category	lb/day										lb/day					
Off-Road	1.0327	10.1917	14.5842	0.0228		0.5102	0.5102		0.4694	0.4694		2,207.5841	2,207.5841	0.7140		2,225.4336
Paving	0.8272					0.0000	0.0000		0.0000	0.0000			0.0000			0.0000
Total	**1.8599**	**10.1917**	**14.5842**	**0.0228**		**0.5102**	**0.5102**		**0.4694**	**0.4694**		**2,207.5841**	**2,207.5841**	**0.7140**		**2,225.4336**

3.5 Paving - 2023

Unmitigated Construction Off-Site

	ROG	NOx	CO	SO2	Fugitive PM10	Exhaust PM10	PM10 Total	Fugitive PM2.5	Exhaust PM2.5	PM2.5 Total	Bio- CO2	NBio- CO2	Total CO2	CH4	N2O	CO2e
Category	lb/day										lb/day					
Hauling	0.0000	0.0000	0.0000	0.0000	0.0000	0.0000	0.0000	0.0000	0.0000	0.0000		0.0000	0.0000	0.0000		0.0000
Vendor	0.0000	0.0000	0.0000	0.0000	0.0000	0.0000	0.0000	0.0000	0.0000	0.0000		0.0000	0.0000	0.0000		0.0000
Worker	0.0566	0.0361	0.5133	1.5900e-003	0.1677	1.2800e-003	0.1689	0.0445	1.1700e-003	0.0456		158.7723	158.7723	4.1000e-003		158.8748
Total	**0.0566**	**0.0361**	**0.5133**	**1.5900e-003**	**0.1677**	**1.2800e-003**	**0.1689**	**0.0445**	**1.1700e-003**	**0.0456**		**158.7723**	**158.7723**	**4.1000e-003**		**158.8748**

Mitigated Construction On-Site

	ROG	NOx	CO	SO2	Fugitive PM10	Exhaust PM10	PM10 Total	Fugitive PM2.5	Exhaust PM2.5	PM2.5 Total	Bio- CO2	NBio- CO2	Total CO2	CH4	N2O	CO2e
Category	lb/day										lb/day					
Off-Road	1.0327	10.1917	14.5842	0.0228		0.5102	0.5102		0.4694	0.4694	0.0000	2,207.5841	2,207.5841	0.7140		2,225.4336
Paving	0.8272					0.0000	0.0000		0.0000	0.0000			0.0000			0.0000
Total	**1.8599**	**10.1917**	**14.5842**	**0.0228**		**0.5102**	**0.5102**		**0.4694**	**0.4694**	**0.0000**	**2,207.5841**	**2,207.5841**	**0.7140**		**2,225.4336**

3.5 Paving - 2023

Mitigated Construction Off-Site

	ROG	NOx	CO	SO2	Fugitive PM10	Exhaust PM10	PM10 Total	Fugitive PM2.5	Exhaust PM2.5	PM2.5 Total	Bio- CO2	NBio- CO2	Total CO2	CH4	N2O	CO2e
Category	lb/day										lb/day					
Hauling	0.0000	0.0000	0.0000	0.0000	0.0000	0.0000	0.0000	0.0000	0.0000	0.0000		0.0000	0.0000	0.0000		0.0000
Vendor	0.0000	0.0000	0.0000	0.0000	0.0000	0.0000	0.0000	0.0000	0.0000	0.0000		0.0000	0.0000	0.0000		0.0000
Worker	0.0566	0.0361	0.5133	1.5900e-003	0.1677	1.2800e-003	0.1689	0.0445	1.1700e-003	0.0456		158.7723	158.7723	4.1000e-003		158.8748
Total	**0.0566**	**0.0361**	**0.5133**	**1.5900e-003**	**0.1677**	**1.2800e-003**	**0.1689**	**0.0445**	**1.1700e-003**	**0.0456**		**158.7723**	**158.7723**	**4.1000e-003**		**158.8748**

3.6 Architectural Coating - 2022

Unmitigated Construction On-Site

	ROG	NOx	CO	SO2	Fugitive PM10	Exhaust PM10	PM10 Total	Fugitive PM2.5	Exhaust PM2.5	PM2.5 Total	Bio- CO2	NBio- CO2	Total CO2	CH4	N2O	CO2e
Category	lb/day										lb/day					
Archit. Coating	30.5463					0.0000	0.0000		0.0000	0.0000			0.0000			0.0000
Off-Road	0.2045	1.4085	1.8136	2.9700e-003		0.0817	0.0817		0.0817	0.0817		281.4481	281.4481	0.0183		281.9062
Total	**30.7508**	**1.4085**	**1.8136**	**2.9700e-003**		**0.0817**	**0.0817**		**0.0817**	**0.0817**		**281.4481**	**281.4481**	**0.0183**		**281.9062**

3.6 Architectural Coating - 2022

Unmitigated Construction Off-Site

	ROG	NOx	CO	SO2	Fugitive PM10	Exhaust PM10	PM10 Total	Fugitive PM2.5	Exhaust PM2.5	PM2.5 Total	Bio- CO2	NBio- CO2	Total CO2	CH4	N2O	CO2e
Category	lb/day										lb/day					
Hauling	0.0000	0.0000	0.0000	0.0000	0.0000	0.0000	0.0000	0.0000	0.0000	0.0000		0.0000	0.0000	0.0000		0.0000
Vendor	0.0000	0.0000	0.0000	0.0000	0.0000	0.0000	0.0000	0.0000	0.0000	0.0000		0.0000	0.0000	0.0000		0.0000
Worker	0.3855	0.2555	3.5674	0.0106	1.0731	8.4000e-003	1.0815	0.2846	7.7400e-003	0.2923		1,054.7638	1,054.7638	0.0291		1,055.4916
Total	**0.3855**	**0.2555**	**3.5674**	**0.0106**	**1.0731**	**8.4000e-003**	**1.0815**	**0.2846**	**7.7400e-003**	**0.2923**		**1,054.7638**	**1,054.7638**	**0.0291**		**1,055.4916**

Mitigated Construction On-Site

	ROG	NOx	CO	SO2	Fugitive PM10	Exhaust PM10	PM10 Total	Fugitive PM2.5	Exhaust PM2.5	PM2.5 Total	Bio- CO2	NBio- CO2	Total CO2	CH4	N2O	CO2e
Category	lb/day										lb/day					
Archit. Coating	30.5463					0.0000	0.0000		0.0000	0.0000			0.0000			0.0000
Off-Road	0.2045	1.4085	1.8136	2.9700e-003		0.0817	0.0817		0.0817	0.0817	0.0000	281.4481	281.4481	0.0183		281.9062
Total	**30.7508**	**1.4085**	**1.8136**	**2.9700e-003**		**0.0817**	**0.0817**		**0.0817**	**0.0817**	**0.0000**	**281.4481**	**281.4481**	**0.0183**		**281.9062**

3.6 Architectural Coating - 2022

Mitigated Construction Off-Site

	ROG	NOx	CO	SO2	Fugitive PM10	Exhaust PM10	PM10 Total	Fugitive PM2.5	Exhaust PM2.5	PM2.5 Total	Bio- CO2	NBio- CO2	Total CO2	CH4	N2O	CO2e
Category	lb/day										lb/day					
Hauling	0.0000	0.0000	0.0000	0.0000	0.0000	0.0000	0.0000	0.0000	0.0000	0.0000		0.0000	0.0000	0.0000		0.0000
Vendor	0.0000	0.0000	0.0000	0.0000	0.0000	0.0000	0.0000	0.0000	0.0000	0.0000		0.0000	0.0000	0.0000		0.0000
Worker	0.3855	0.2555	3.5674	0.0106	1.0731	8.4000e-003	1.0815	0.2846	7.7400e-003	0.2923		1,054.7638	1,054.7638	0.0291		1,055.4916
Total	**0.3855**	**0.2555**	**3.5674**	**0.0106**	**1.0731**	**8.4000e-003**	**1.0815**	**0.2846**	**7.7400e-003**	**0.2923**		**1,054.7638**	**1,054.7638**	**0.0291**		**1,055.4916**

3.6 Architectural Coating - 2023

Unmitigated Construction On-Site

	ROG	NOx	CO	SO2	Fugitive PM10	Exhaust PM10	PM10 Total	Fugitive PM2.5	Exhaust PM2.5	PM2.5 Total	Bio- CO2	NBio- CO2	Total CO2	CH4	N2O	CO2e
Category	lb/day										lb/day					
Archit. Coating	30.5463					0.0000	0.0000		0.0000	0.0000			0.0000			0.0000
Off-Road	0.1917	1.3030	1.8111	2.9700e-003		0.0708	0.0708		0.0708	0.0708		281.4481	281.4481	0.0168		281.8690
Total	**30.7380**	**1.3030**	**1.8111**	**2.9700e-003**		**0.0708**	**0.0708**		**0.0708**	**0.0708**		**281.4481**	**281.4481**	**0.0168**		**281.8690**

3.6 Architectural Coating - 2023

Unmitigated Construction Off-Site

	ROG	NOx	CO	SO2	Fugitive PM10	Exhaust PM10	PM10 Total	Fugitive PM2.5	Exhaust PM2.5	PM2.5 Total	Bio- CO2	NBio- CO2	Total CO2	CH4	N2O	CO2e
Category	lb/day										lb/day					
Hauling	0.0000	0.0000	0.0000	0.0000	0.0000	0.0000	0.0000	0.0000	0.0000	0.0000		0.0000	0.0000	0.0000		0.0000
Vendor	0.0000	0.0000	0.0000	0.0000	0.0000	0.0000	0.0000	0.0000	0.0000	0.0000		0.0000	0.0000	0.0000		0.0000
Worker	0.3620	0.2312	3.2853	0.0102	1.0731	8.1600e-003	1.0812	0.2846	7.5100e-003	0.2921		1,016.1427	1,016.1427	0.0263		1,016.7989
Total	**0.3620**	**0.2312**	**3.2853**	**0.0102**	**1.0731**	**8.1600e-003**	**1.0812**	**0.2846**	**7.5100e-003**	**0.2921**		**1,016.1427**	**1,016.1427**	**0.0263**		**1,016.7989**

Mitigated Construction On-Site

	ROG	NOx	CO	SO2	Fugitive PM10	Exhaust PM10	PM10 Total	Fugitive PM2.5	Exhaust PM2.5	PM2.5 Total	Bio- CO2	NBio- CO2	Total CO2	CH4	N2O	CO2e
Category	lb/day										lb/day					
Archit. Coating	30.5463					0.0000	0.0000		0.0000	0.0000			0.0000			0.0000
Off-Road	0.1917	1.3030	1.8111	2.9700e-003		0.0708	0.0708		0.0708	0.0708	0.0000	281.4481	281.4481	0.0168		281.8690
Total	**30.7380**	**1.3030**	**1.8111**	**2.9700e-003**		**0.0708**	**0.0708**		**0.0708**	**0.0708**	**0.0000**	**281.4481**	**281.4481**	**0.0168**		**281.8690**

3.6 Architectural Coating - 2023

Mitigated Construction Off-Site

	ROG	NOx	CO	SO2	Fugitive PM10	Exhaust PM10	PM10 Total	Fugitive PM2.5	Exhaust PM2.5	PM2.5 Total	Bio- CO2	NBio- CO2	Total CO2	CH4	N2O	CO2e
Category	lb/day										lb/day					
Hauling	0.0000	0.0000	0.0000	0.0000	0.0000	0.0000	0.0000	0.0000	0.0000	0.0000		0.0000	0.0000	0.0000		0.0000
Vendor	0.0000	0.0000	0.0000	0.0000	0.0000	0.0000	0.0000	0.0000	0.0000	0.0000		0.0000	0.0000	0.0000		0.0000
Worker	0.3620	0.2312	3.2853	0.0102	1.0731	8.1600e-003	1.0812	0.2846	7.5100e-003	0.2921		1,016.1427	1,016.1427	0.0263		1,016.7989
Total	**0.3620**	**0.2312**	**3.2853**	**0.0102**	**1.0731**	**8.1600e-003**	**1.0812**	**0.2846**	**7.5100e-003**	**0.2921**		**1,016.1427**	**1,016.1427**	**0.0263**		**1,016.7989**

4.0 Operational Detail - Mobile

4.1 Mitigation Measures Mobile

	ROG	NOx	CO	SO2	Fugitive PM10	Exhaust PM10	PM10 Total	Fugitive PM2.5	Exhaust PM2.5	PM2.5 Total	Bio- CO2	NBio- CO2	Total CO2	CH4	N2O	CO2e
Category	lb/day										lb/day					
Mitigated	3.8282	58.6167	61.0560	0.4001	26.0859	0.2163	26.3022	7.0380	0.2024	7.2404		41,790.6029	41,790.6029	1.6839		41,832.7008
Unmitigated	3.8282	58.6167	61.0560	0.4001	26.0859	0.2163	26.3022	7.0380	0.2024	7.2404		41,790.6029	41,790.6029	1.6839		41,832.7008

4.2 Trip Summary Information

	Average Daily Trip Rate			Unmitigated	Mitigated
Land Use	Weekday	Saturday	Sunday	Annual VMT	Annual VMT
City Park	0.00	0.00	0.00		
General Light Industry	2,706.87	2,706.87	2706.87	11,986,773	11,986,773
Parking Lot	0.00	0.00	0.00		
Total	2,706.87	2,706.87	2,706.87	11,986,773	11,986,773

4.3 Trip Type Information

	Miles			Trip %			Trip Purpose %		
Land Use	H-W or C-W	H-S or C-C	H-O or C-NW	H-W or C-W	H-S or C-C	H-O or C-NW	Primary	Diverted	Pass-by
City Park	16.60	8.40	6.90	33.00	48.00	19.00	66	28	6
General Light Industry	16.60	8.40	6.90	59.00	28.00	13.00	92	5	3
Parking Lot	16.60	8.40	6.90	0.00	0.00	0.00	0	0	0

4.4 Fleet Mix

Land Use	LDA	LDT1	LDT2	MDV	LHD1	LHD2	MHD	HHD	OBUS	UBUS	MCY	SBUS	MH
City Park	0.786000	0.000000	0.000000	0.000000	0.000000	0.000000	0.080000	0.134000	0.000000	0.000000	0.000000	0.000000	0.000000
General Light Industry	0.786000	0.000000	0.000000	0.000000	0.000000	0.000000	0.080000	0.134000	0.000000	0.000000	0.000000	0.000000	0.000000
Parking Lot	0.786000	0.000000	0.000000	0.000000	0.000000	0.000000	0.080000	0.134000	0.000000	0.000000	0.000000	0.000000	0.000000

5.0 Energy Detail

Historical Energy Use: N

5.1 Mitigation Measures Energy

	ROG	NOx	CO	SO2	Fugitive PM10	Exhaust PM10	PM10 Total	Fugitive PM2.5	Exhaust PM2.5	PM2.5 Total	Bio- CO2	NBio- CO2	Total CO2	CH4	N2O	CO2e
Category	lb/day										lb/day					
NaturalGas Mitigated	0.2919	2.6532	2.2287	0.0159		0.2016	0.2016		0.2016	0.2016		3,183.8498	3,183.8498	0.0610	0.0584	3,202.7698
NaturalGas Unmitigated	0.2919	2.6532	2.2287	0.0159		0.2016	0.2016		0.2016	0.2016		3,183.8498	3,183.8498	0.0610	0.0584	3,202.7698

5.2 Energy by Land Use - NaturalGas

Unmitigated

	NaturalGas Use	ROG	NOx	CO	SO2	Fugitive PM10	Exhaust PM10	PM10 Total	Fugitive PM2.5	Exhaust PM2.5	PM2.5 Total	Bio- CO2	NBio- CO2	Total CO2	CH4	N2O	CO2e
Land Use	kBTU/yr	lb/day										lb/day					
City Park	0	0.0000	0.0000	0.0000	0.0000		0.0000	0.0000		0.0000	0.0000		0.0000	0.0000	0.0000	0.0000	0.0000
General Light Industry	27062.7	0.2919	2.6532	2.2287	0.0159		0.2016	0.2016		0.2016	0.2016		3,183.8498	3,183.8498	0.0610	0.0584	3,202.7698
Parking Lot	0	0.0000	0.0000	0.0000	0.0000		0.0000	0.0000		0.0000	0.0000		0.0000	0.0000	0.0000	0.0000	0.0000
Total		**0.2919**	**2.6532**	**2.2287**	**0.0159**		**0.2016**	**0.2016**		**0.2016**	**0.2016**		**3,183.8498**	**3,183.8498**	**0.0610**	**0.0584**	**3,202.7698**

Mitigated

	NaturalGas Use	ROG	NOx	CO	SO2	Fugitive PM10	Exhaust PM10	PM10 Total	Fugitive PM2.5	Exhaust PM2.5	PM2.5 Total	Bio- CO2	NBio- CO2	Total CO2	CH4	N2O	CO2e
Land Use	kBTU/yr	lb/day										lb/day					
City Park	0	0.0000	0.0000	0.0000	0.0000		0.0000	0.0000		0.0000	0.0000		0.0000	0.0000	0.0000	0.0000	0.0000
General Light Industry	27.0627	0.2919	2.6532	2.2287	0.0159		0.2016	0.2016		0.2016	0.2016		3,183.8498	3,183.8498	0.0610	0.0584	3,202.7698
Parking Lot	0	0.0000	0.0000	0.0000	0.0000		0.0000	0.0000		0.0000	0.0000		0.0000	0.0000	0.0000	0.0000	0.0000
Total		**0.2919**	**2.6532**	**2.2287**	**0.0159**		**0.2016**	**0.2016**		**0.2016**	**0.2016**		**3,183.8498**	**3,183.8498**	**0.0610**	**0.0584**	**3,202.7698**

6.0 Area Detail

6.1 Mitigation Measures Area

	ROG	NOx	CO	SO2	Fugitive PM10	Exhaust PM10	PM10 Total	Fugitive PM2.5	Exhaust PM2.5	PM2.5 Total	Bio- CO2	NBio- CO2	Total CO2	CH4	N2O	CO2e
Category	lb/day										lb/day					
Mitigated	12.4100	5.2000e-004	0.0571	0.0000		2.0000e-004	2.0000e-004		2.0000e-004	2.0000e-004		0.1224	0.1224	3.2000e-004		0.1305
Unmitigated	12.4100	5.2000e-004	0.0571	0.0000		2.0000e-004	2.0000e-004		2.0000e-004	2.0000e-004		0.1224	0.1224	3.2000e-004		0.1305

6.2 Area by SubCategory

Unmitigated

	ROG	NOx	CO	SO2	Fugitive PM10	Exhaust PM10	PM10 Total	Fugitive PM2.5	Exhaust PM2.5	PM2.5 Total	Bio- CO2	NBio- CO2	Total CO2	CH4	N2O	CO2e
SubCategory	lb/day										lb/day					
Architectural Coating	1.4227					0.0000	0.0000		0.0000	0.0000			0.0000			0.0000
Consumer Products	10.9820					0.0000	0.0000		0.0000	0.0000			0.0000			0.0000
Landscaping	5.2900e-003	5.2000e-004	0.0571	0.0000		2.0000e-004	2.0000e-004		2.0000e-004	2.0000e-004		0.1224	0.1224	3.2000e-004		0.1305
Total	**12.4099**	**5.2000e-004**	**0.0571**	**0.0000**		**2.0000e-004**	**2.0000e-004**		**2.0000e-004**	**2.0000e-004**		**0.1224**	**0.1224**	**3.2000e-004**		**0.1305**

6.2 Area by SubCategory

Mitigated

	ROG	NOx	CO	SO2	Fugitive PM10	Exhaust PM10	PM10 Total	Fugitive PM2.5	Exhaust PM2.5	PM2.5 Total	Bio- CO2	NBio- CO2	Total CO2	CH4	N2O	CO2e
SubCategory	lb/day										lb/day					
Architectural Coating	1.4227					0.0000	0.0000		0.0000	0.0000			0.0000			0.0000
Consumer Products	10.9820					0.0000	0.0000		0.0000	0.0000			0.0000			0.0000
Landscaping	5.2900e-003	5.2000e-004	0.0571	0.0000		2.0000e-004	2.0000e-004		2.0000e-004	2.0000e-004		0.1224	0.1224	3.2000e-004		0.1305
Total	**12.4099**	**5.2000e-004**	**0.0571**	**0.0000**		**2.0000e-004**	**2.0000e-004**		**2.0000e-004**	**2.0000e-004**		**0.1224**	**0.1224**	**3.2000e-004**		**0.1305**

7.0 Water Detail

7.1 Mitigation Measures Water

8.0 Waste Detail

8.1 Mitigation Measures Waste

9.0 Operational Offroad

Equipment Type	Number	Hours/Day	Days/Year	Horse Power	Load Factor	Fuel Type

10.0 Stationary Equipment

Fire Pumps and Emergency Generators

Equipment Type	Number	Hours/Day	Hours/Year	Horse Power	Load Factor	Fuel Type

Boilers

Equipment Type	Number	Heat Input/Day	Heat Input/Year	Boiler Rating	Fuel Type

User Defined Equipment

Equipment Type	Number

11.0 Vegetation

Irwindale 5175 Vincent Avenue

Los Angeles-South Coast County, Winter

1.0 Project Characteristics

1.1 Land Usage

Land Uses	Size	Metric	Lot Acreage	Floor Surface Area	Population
General Light Industry	545.74	1000sqft	12.41	545,740.00	0
Parking Lot	11.05	Acre	11.05	481,338.00	0
City Park	2.59	Acre	2.59	112,820.40	0

1.2 Other Project Characteristics

Urbanization	Urban	**Wind Speed (m/s)**	2.2	**Precipitation Freq (Days)**	33
Climate Zone	9			**Operational Year**	2023
Utility Company	Southern California Edison				
CO2 Intensity (lb/MWhr)	531.75	**CH4 Intensity (lb/MWhr)**	0.029	**N2O Intensity (lb/MWhr)**	0.006

1.3 User Entered Comments & Non-Default Data

Irwindale 5175 Vincent Avenue - Los Angeles-South Coast County, Winter

Project Characteristics - Op. year - 2023. CO2 Intensity factor adjusted to reflect RPS value in 2023 (note: CalEEMod default factor is from 2012) - factor reduced by 24.3% based on change in eligible renewables from 22% in 2013 to 41% by 2023.

Land Use - Unit Amounts: Unrefrigerated Warehouse-No Rail: 545,735 sf (on 12.41 acres); Landscaping: 112,749 sf (2.59 acres) Parking: 26.05-2.59-12.41 acres = 11.05 acres for parking. Total lot acreage: 26.05 acres.

Construction Phase - Default construction schedule based on project characteristics (note - architectural coatings phased assumed to also occur during paving and building construction phases).

Off-road Equipment -

Off-road Equipment -

Grading - Balanced soil import/export (from Ken Lee, email dated March 30, 2020). Assume total site is graded (26.05 acres).

Vehicle Trips - Trip rates from Traffic Impact Analysis (Ganddini, 2020): 4.96 trips per thousdand sf.

Energy Use -

Construction Off-road Equipment Mitigation - Reductions include: Water Exposed Area 3 times daily; Unpaved Road Mitigation (Moisture Content at 12%; Vehicle Speed 15 MPH).

Energy Mitigation -

Fleet Mix - Fleet Mix updated to reflect Traffic Study (Ganddini, 2020) - 78.6% Passenger Car; 13.4% Heavy-duty Trucks (3 and 4 axle); 8.0% Medium-duty Trucks (2-axle).

Table Name	Column Name	Default Value	New Value
tblConstDustMitigation	WaterUnpavedRoadMoistureContent	0	12
tblConstDustMitigation	WaterUnpavedRoadVehicleSpeed	0	15
tblConstructionPhase	NumDays	35.00	170.00
tblFleetMix	HHD	0.03	0.13
tblFleetMix	HHD	0.03	0.13
tblFleetMix	HHD	0.03	0.13
tblFleetMix	LDA	0.55	0.79
tblFleetMix	LDA	0.55	0.79
tblFleetMix	LDA	0.55	0.79
tblFleetMix	LDT1	0.04	0.00
tblFleetMix	LDT1	0.04	0.00
tblFleetMix	LDT1	0.04	0.00

tblFleetMix	LDT2	0.21	0.00
tblFleetMix	LDT2	0.21	0.00
tblFleetMix	LDT2	0.21	0.00
tblFleetMix	LHD1	0.02	0.00
tblFleetMix	LHD1	0.02	0.00
tblFleetMix	LHD1	0.02	0.00
tblFleetMix	LHD2	6.2270e-003	0.00
tblFleetMix	LHD2	6.2270e-003	0.00
tblFleetMix	LHD2	6.2270e-003	0.00
tblFleetMix	MCY	5.1840e-003	0.00
tblFleetMix	MCY	5.1840e-003	0.00
tblFleetMix	MCY	5.1840e-003	0.00
tblFleetMix	MDV	0.12	0.00
tblFleetMix	MDV	0.12	0.00
tblFleetMix	MDV	0.12	0.00
tblFleetMix	MH	8.6200e-004	0.00
tblFleetMix	MH	8.6200e-004	0.00
tblFleetMix	MH	8.6200e-004	0.00
tblFleetMix	MHD	0.02	0.08
tblFleetMix	MHD	0.02	0.08
tblFleetMix	MHD	0.02	0.08
tblFleetMix	OBUS	2.5460e-003	0.00
tblFleetMix	OBUS	2.5460e-003	0.00
tblFleetMix	OBUS	2.5460e-003	0.00
tblFleetMix	SBUS	6.9200e-004	0.00
tblFleetMix	SBUS	6.9200e-004	0.00
tblFleetMix	SBUS	6.9200e-004	0.00

tblFleetMix	UBUS	2.1330e-003	0.00
tblFleetMix	UBUS	2.1330e-003	0.00
tblFleetMix	UBUS	2.1330e-003	0.00
tblGrading	AcresOfGrading	112.50	26.05
tblLandUse	LotAcreage	12.53	12.41
tblProjectCharacteristics	CO2IntensityFactor	702.44	531.75
tblVehicleTrips	ST_TR	22.75	0.00
tblVehicleTrips	ST_TR	1.32	4.96
tblVehicleTrips	SU_TR	16.74	0.00
tblVehicleTrips	SU_TR	0.68	4.96
tblVehicleTrips	WD_TR	1.89	0.00
tblVehicleTrips	WD_TR	6.97	4.96

2.0 Emissions Summary

2.1 Overall Construction (Maximum Daily Emission)

Unmitigated Construction

	ROG	NOx	CO	SO2	Fugitive PM10	Exhaust PM10	PM10 Total	Fugitive PM2.5	Exhaust PM2.5	PM2.5 Total	Bio- CO2	NBio- CO2	Total CO2	CH4	N2O	CO2e
Year	lb/day										lb/day					
2021	4.7816	46.4651	39.4650	0.1253	18.2675	2.0461	20.3135	9.9840	1.8824	11.8664	0.0000	12,688.8079	12,688.8079	1.9491	0.0000	12,716.0553
2022	35.5923	35.9366	42.6495	0.1359	7.6244	0.9746	8.5989	2.0492	0.9213	2.9705	0.0000	13,739.5002	13,739.5002	1.1055	0.0000	13,767.1370
2023	35.1529	30.2608	40.3979	0.1322	7.6244	0.8353	8.4597	2.0492	0.7895	2.8387	0.0000	13,368.8637	13,368.8637	1.0463	0.0000	13,395.0216
Maximum	**35.5923**	**46.4651**	**42.6495**	**0.1359**	**18.2675**	**2.0461**	**20.3135**	**9.9840**	**1.8824**	**11.8664**	**0.0000**	**13,739.5002**	**13,739.5002**	**1.9491**	**0.0000**	**13,767.1370**

Mitigated Construction

	ROG	NOx	CO	SO2	Fugitive PM10	Exhaust PM10	PM10 Total	Fugitive PM2.5	Exhaust PM2.5	PM2.5 Total	Bio- CO2	NBio- CO2	Total CO2	CH4	N2O	CO2e
Year	lb/day										lb/day					
2021	4.7816	46.4651	39.4650	0.1253	7.2470	2.0461	9.2931	3.9263	1.8824	5.8087	0.0000	12,688.8079	12,688.8079	1.9491	0.0000	12,716.0553
2022	35.5923	35.9366	42.6495	0.1359	7.6244	0.9746	8.5989	2.0492	0.9213	2.9705	0.0000	13,739.5002	13,739.5002	1.1055	0.0000	13,767.1370
2023	35.1529	30.2608	40.3979	0.1322	7.6244	0.8353	8.4597	2.0492	0.7895	2.8387	0.0000	13,368.8637	13,368.8637	1.0463	0.0000	13,395.0216
Maximum	**35.5923**	**46.4651**	**42.6495**	**0.1359**	**7.6244**	**2.0461**	**9.2931**	**3.9263**	**1.8824**	**5.8087**	**0.0000**	**13,739.5002**	**13,739.5002**	**1.9491**	**0.0000**	**13,767.1370**

Irwindale 5175 Vincent Avenue - Los Angeles-South Coast County, Winter

	ROG	NOx	CO	SO2	Fugitive PM10	Exhaust PM10	PM10 Total	Fugitive PM2.5	Exhaust PM2.5	PM2.5 Total	Bio- CO2	NBio-CO2	Total CO2	CH4	N20	CO2e
Percent Reduction	0.00	0.00	0.00	0.00	32.88	0.00	29.49	43.02	0.00	34.27	0.00	0.00	0.00	0.00	0.00	0.00

2.2 Overall Operational

Unmitigated Operational

	ROG	NOx	CO	SO2	Fugitive PM10	Exhaust PM10	PM10 Total	Fugitive PM2.5	Exhaust PM2.5	PM2.5 Total	Bio- CO2	NBio- CO2	Total CO2	CH4	N2O	CO2e
Category	lb/day										lb/day					
Area	12.4100	5.2000e-004	0.0571	0.0000		2.0000e-004	2.0000e-004		2.0000e-004	2.0000e-004		0.1224	0.1224	3.2000e-004		0.1305
Energy	0.2919	2.6532	2.2287	0.0159		0.2016	0.2016		0.2016	0.2016		3,183.8498	3,183.8498	0.0610	0.0584	3,202.7698
Mobile	3.7522	58.9864	58.3292	0.3858	26.0859	0.2194	26.3052	7.0380	0.2052	7.2432		40,322.6978	40,322.6978	1.7206		40,365.7138
Total	**16.4540**	**61.6401**	**60.6149**	**0.4017**	**26.0859**	**0.4212**	**26.5071**	**7.0380**	**0.4071**	**7.4451**		**43,506.6700**	**43,506.6700**	**1.7820**	**0.0584**	**43,568.6141**

Mitigated Operational

	ROG	NOx	CO	SO2	Fugitive PM10	Exhaust PM10	PM10 Total	Fugitive PM2.5	Exhaust PM2.5	PM2.5 Total	Bio- CO2	NBio- CO2	Total CO2	CH4	N2O	CO2e
Category	lb/day										lb/day					
Area	12.4100	5.2000e-004	0.0571	0.0000		2.0000e-004	2.0000e-004		2.0000e-004	2.0000e-004		0.1224	0.1224	3.2000e-004		0.1305
Energy	0.2919	2.6532	2.2287	0.0159		0.2016	0.2016		0.2016	0.2016		3,183.8498	3,183.8498	0.0610	0.0584	3,202.7698
Mobile	3.7522	58.9864	58.3292	0.3858	26.0859	0.2194	26.3052	7.0380	0.2052	7.2432		40,322.6978	40,322.6978	1.7206		40,365.7138
Total	**16.4540**	**61.6401**	**60.6149**	**0.4017**	**26.0859**	**0.4212**	**26.5071**	**7.0380**	**0.4071**	**7.4451**		**43,506.6700**	**43,506.6700**	**1.7820**	**0.0584**	**43,568.6141**

	ROG	NOx	CO	SO2	Fugitive PM10	Exhaust PM10	PM10 Total	Fugitive PM2.5	Exhaust PM2.5	PM2.5 Total	Bio- CO2	NBio-CO2	Total CO2	CH4	N20	CO2e
Percent Reduction	**0.00**	**0.00**	**0.00**	**0.00**	**0.00**	**0.00**	**0.00**	**0.00**	**0.00**	**0.00**	**0.00**	**0.00**	**0.00**	**0.00**	**0.00**	**0.00**

3.0 Construction Detail

Construction Phase

Phase Number	Phase Name	Phase Type	Start Date	End Date	Num Days Week	Num Days	Phase Description
1	Site Preparation	Site Preparation	4/1/2021	4/28/2021	5	20	
2	Grading	Grading	4/29/2021	6/30/2021	5	45	
3	Building Construction	Building Construction	7/1/2021	3/8/2023	5	440	
4	Paving	Paving	3/9/2023	4/26/2023	5	35	
5	Architectural Coating	Architectural Coating	9/1/2022	4/26/2023	5	170	

Acres of Grading (Site Preparation Phase): 0

Acres of Grading (Grading Phase): 26.05

Acres of Paving: 11.05

Residential Indoor: 0; Residential Outdoor: 0; Non-Residential Indoor: 818,610; Non-Residential Outdoor: 272,870; Striped Parking Area: 28,880 (Architectural Coating – sqft)

OffRoad Equipment

Phase Name	Offroad Equipment Type	Amount	Usage Hours	Horse Power	Load Factor
Site Preparation	Rubber Tired Dozers	3	8.00	247	0.40
Site Preparation	Tractors/Loaders/Backhoes	4	8.00	97	0.37
Grading	Excavators	2	8.00	158	0.38
Grading	Graders	1	8.00	187	0.41
Grading	Rubber Tired Dozers	1	8.00	247	0.40
Grading	Scrapers	2	8.00	367	0.48
Grading	Tractors/Loaders/Backhoes	2	8.00	97	0.37
Building Construction	Cranes	1	7.00	231	0.29
Building Construction	Forklifts	3	8.00	89	0.20
Building Construction	Generator Sets	1	8.00	84	0.74
Building Construction	Tractors/Loaders/Backhoes	3	7.00	97	0.37
Building Construction	Welders	1	8.00	46	0.45
Architectural Coating	Air Compressors	1	6.00	78	0.48
Paving	Pavers	2	8.00	130	0.42
Paving	Paving Equipment	2	8.00	132	0.36
Paving	Rollers	2	8.00	80	0.38

Trips and VMT

Phase Name	Offroad Equipment Count	Worker Trip Number	Vendor Trip Number	Hauling Trip Number	Worker Trip Length	Vendor Trip Length	Hauling Trip Length	Worker Vehicle Class	Vendor Vehicle Class	Hauling Vehicle Class
Site Preparation	7	18.00	0.00	0.00	14.70	6.90	20.00	LD_Mix	HDT_Mix	HHDT
Grading	8	20.00	0.00	0.00	14.70	6.90	20.00	LD_Mix	HDT_Mix	HHDT
Building Construction	9	479.00	187.00	0.00	14.70	6.90	20.00	LD_Mix	HDT_Mix	HHDT
Architectural Coating	1	96.00	0.00	0.00	14.70	6.90	20.00	LD_Mix	HDT_Mix	HHDT
Paving	6	15.00	0.00	0.00	14.70	6.90	20.00	LD_Mix	HDT_Mix	HHDT

3.1 Mitigation Measures Construction

Water Exposed Area

Water Unpaved Roads

Reduce Vehicle Speed on Unpaved Roads

3.2 Site Preparation - 2021

Unmitigated Construction On-Site

	ROG	NOx	CO	SO2	Fugitive PM10	Exhaust PM10	PM10 Total	Fugitive PM2.5	Exhaust PM2.5	PM2.5 Total	Bio- CO2	NBio- CO2	Total CO2	CH4	N2O	CO2e
Category	lb/day										lb/day					
Fugitive Dust					18.0663	0.0000	18.0663	9.9307	0.0000	9.9307			0.0000			0.0000
Off-Road	3.8882	40.4971	21.1543	0.0380		2.0445	2.0445		1.8809	1.8809		3,685.6569	3,685.6569	1.1920		3,715.4573
Total	**3.8882**	**40.4971**	**21.1543**	**0.0380**	**18.0663**	**2.0445**	**20.1107**	**9.9307**	**1.8809**	**11.8116**		**3,685.6569**	**3,685.6569**	**1.1920**		**3,715.4573**

3.2 Site Preparation - 2021

Unmitigated Construction Off-Site

	ROG	NOx	CO	SO2	Fugitive PM10	Exhaust PM10	PM10 Total	Fugitive PM2.5	Exhaust PM2.5	PM2.5 Total	Bio- CO2	NBio- CO2	Total CO2	CH4	N2O	CO2e
Category	lb/day										lb/day					
Hauling	0.0000	0.0000	0.0000	0.0000	0.0000	0.0000	0.0000	0.0000	0.0000	0.0000		0.0000	0.0000	0.0000		0.0000
Vendor	0.0000	0.0000	0.0000	0.0000	0.0000	0.0000	0.0000	0.0000	0.0000	0.0000		0.0000	0.0000	0.0000		0.0000
Worker	0.0858	0.0587	0.6629	1.9400e-003	0.2012	1.6300e-003	0.2028	0.0534	1.5000e-003	0.0549		193.0052	193.0052	5.6800e-003		193.1472
Total	**0.0858**	**0.0587**	**0.6629**	**1.9400e-003**	**0.2012**	**1.6300e-003**	**0.2028**	**0.0534**	**1.5000e-003**	**0.0549**		**193.0052**	**193.0052**	**5.6800e-003**		**193.1472**

Mitigated Construction On-Site

	ROG	NOx	CO	SO2	Fugitive PM10	Exhaust PM10	PM10 Total	Fugitive PM2.5	Exhaust PM2.5	PM2.5 Total	Bio- CO2	NBio- CO2	Total CO2	CH4	N2O	CO2e
Category	lb/day										lb/day					
Fugitive Dust					7.0458	0.0000	7.0458	3.8730	0.0000	3.8730			0.0000			0.0000
Off-Road	3.8882	40.4971	21.1543	0.0380		2.0445	2.0445		1.8809	1.8809	0.0000	3,685.6569	3,685.6569	1.1920		3,715.4573
Total	**3.8882**	**40.4971**	**21.1543**	**0.0380**	**7.0458**	**2.0445**	**9.0903**	**3.8730**	**1.8809**	**5.7539**	**0.0000**	**3,685.6569**	**3,685.6569**	**1.1920**		**3,715.4573**

3.2 Site Preparation - 2021

Mitigated Construction Off-Site

	ROG	NOx	CO	SO2	Fugitive PM10	Exhaust PM10	PM10 Total	Fugitive PM2.5	Exhaust PM2.5	PM2.5 Total	Bio- CO2	NBio- CO2	Total CO2	CH4	N2O	CO2e
Category	lb/day										lb/day					
Hauling	0.0000	0.0000	0.0000	0.0000	0.0000	0.0000	0.0000	0.0000	0.0000	0.0000		0.0000	0.0000	0.0000		0.0000
Vendor	0.0000	0.0000	0.0000	0.0000	0.0000	0.0000	0.0000	0.0000	0.0000	0.0000		0.0000	0.0000	0.0000		0.0000
Worker	0.0858	0.0587	0.6629	1.9400e-003	0.2012	1.6300e-003	0.2028	0.0534	1.5000e-003	0.0549		193.0052	193.0052	5.6800e-003		193.1472
Total	**0.0858**	**0.0587**	**0.6629**	**1.9400e-003**	**0.2012**	**1.6300e-003**	**0.2028**	**0.0534**	**1.5000e-003**	**0.0549**		**193.0052**	**193.0052**	**5.6800e-003**		**193.1472**

3.3 Grading - 2021

Unmitigated Construction On-Site

	ROG	NOx	CO	SO2	Fugitive PM10	Exhaust PM10	PM10 Total	Fugitive PM2.5	Exhaust PM2.5	PM2.5 Total	Bio- CO2	NBio- CO2	Total CO2	CH4	N2O	CO2e
Category	lb/day										lb/day					
Fugitive Dust					6.6360	0.0000	6.6360	3.3765	0.0000	3.3765			0.0000			0.0000
Off-Road	4.1912	46.3998	30.8785	0.0620		1.9853	1.9853		1.8265	1.8265		6,007.0434	6,007.0434	1.9428		6,055.6134
Total	**4.1912**	**46.3998**	**30.8785**	**0.0620**	**6.6360**	**1.9853**	**8.6213**	**3.3765**	**1.8265**	**5.2030**		**6,007.0434**	**6,007.0434**	**1.9428**		**6,055.6134**

3.3 Grading - 2021

Unmitigated Construction Off-Site

	ROG	NOx	CO	SO2	Fugitive PM10	Exhaust PM10	PM10 Total	Fugitive PM2.5	Exhaust PM2.5	PM2.5 Total	Bio- CO2	NBio- CO2	Total CO2	CH4	N2O	CO2e
Category	lb/day										lb/day					
Hauling	0.0000	0.0000	0.0000	0.0000	0.0000	0.0000	0.0000	0.0000	0.0000	0.0000		0.0000	0.0000	0.0000		0.0000
Vendor	0.0000	0.0000	0.0000	0.0000	0.0000	0.0000	0.0000	0.0000	0.0000	0.0000		0.0000	0.0000	0.0000		0.0000
Worker	0.0954	0.0652	0.7365	2.1500e-003	0.2236	1.8100e-003	0.2254	0.0593	1.6600e-003	0.0610		214.4502	214.4502	6.3100e-003		214.6080
Total	**0.0954**	**0.0652**	**0.7365**	**2.1500e-003**	**0.2236**	**1.8100e-003**	**0.2254**	**0.0593**	**1.6600e-003**	**0.0610**		**214.4502**	**214.4502**	**6.3100e-003**		**214.6080**

Mitigated Construction On-Site

	ROG	NOx	CO	SO2	Fugitive PM10	Exhaust PM10	PM10 Total	Fugitive PM2.5	Exhaust PM2.5	PM2.5 Total	Bio- CO2	NBio- CO2	Total CO2	CH4	N2O	CO2e
Category	lb/day										lb/day					
Fugitive Dust					2.5880	0.0000	2.5880	1.3168	0.0000	1.3168			0.0000			0.0000
Off-Road	4.1912	46.3998	30.8785	0.0620		1.9853	1.9853		1.8265	1.8265	0.0000	6,007.0434	6,007.0434	1.9428		6,055.6134
Total	**4.1912**	**46.3998**	**30.8785**	**0.0620**	**2.5880**	**1.9853**	**4.5734**	**1.3168**	**1.8265**	**3.1434**	**0.0000**	**6,007.0434**	**6,007.0434**	**1.9428**		**6,055.6134**

3.3 Grading - 2021

Mitigated Construction Off-Site

	ROG	NOx	CO	SO2	Fugitive PM10	Exhaust PM10	PM10 Total	Fugitive PM2.5	Exhaust PM2.5	PM2.5 Total	Bio- CO2	NBio- CO2	Total CO2	CH4	N2O	CO2e
Category	lb/day										lb/day					
Hauling	0.0000	0.0000	0.0000	0.0000	0.0000	0.0000	0.0000	0.0000	0.0000	0.0000		0.0000	0.0000	0.0000		0.0000
Vendor	0.0000	0.0000	0.0000	0.0000	0.0000	0.0000	0.0000	0.0000	0.0000	0.0000		0.0000	0.0000	0.0000		0.0000
Worker	0.0954	0.0652	0.7365	2.1500e-003	0.2236	1.8100e-003	0.2254	0.0593	1.6600e-003	0.0610		214.4502	214.4502	6.3100e-003		214.6080
Total	**0.0954**	**0.0652**	**0.7365**	**2.1500e-003**	**0.2236**	**1.8100e-003**	**0.2254**	**0.0593**	**1.6600e-003**	**0.0610**		**214.4502**	**214.4502**	**6.3100e-003**		**214.6080**

3.4 Building Construction - 2021

Unmitigated Construction On-Site

	ROG	NOx	CO	SO2	Fugitive PM10	Exhaust PM10	PM10 Total	Fugitive PM2.5	Exhaust PM2.5	PM2.5 Total	Bio- CO2	NBio- CO2	Total CO2	CH4	N2O	CO2e
Category	lb/day										lb/day					
Off-Road	1.9009	17.4321	16.5752	0.0269		0.9586	0.9586		0.9013	0.9013		2,553.3639	2,553.3639	0.6160		2,568.7643
Total	**1.9009**	**17.4321**	**16.5752**	**0.0269**		**0.9586**	**0.9586**		**0.9013**	**0.9013**		**2,553.3639**	**2,553.3639**	**0.6160**		**2,568.7643**

3.4 Building Construction - 2021

Unmitigated Construction Off-Site

	ROG	NOx	CO	SO2	Fugitive PM10	Exhaust PM10	PM10 Total	Fugitive PM2.5	Exhaust PM2.5	PM2.5 Total	Bio- CO2	NBio- CO2	Total CO2	CH4	N2O	CO2e
Category	lb/day										lb/day					
Hauling	0.0000	0.0000	0.0000	0.0000	0.0000	0.0000	0.0000	0.0000	0.0000	0.0000		0.0000	0.0000	0.0000		0.0000
Vendor	0.5967	18.1182	5.2504	0.0468	1.1972	0.0383	1.2355	0.3447	0.0366	0.3813		4,999.3613	4,999.3613	0.3227		5,007.4299
Worker	2.2840	1.5623	17.6395	0.0516	5.3541	0.0433	5.3974	1.4199	0.0399	1.4598		5,136.0827	5,136.0827	0.1511		5,139.8611
Total	**2.8807**	**19.6804**	**22.8898**	**0.0983**	**6.5513**	**0.0816**	**6.6329**	**1.7646**	**0.0765**	**1.8411**		**10,135.4440**	**10,135.4440**	**0.4739**		**10,147.2910**

Mitigated Construction On-Site

	ROG	NOx	CO	SO2	Fugitive PM10	Exhaust PM10	PM10 Total	Fugitive PM2.5	Exhaust PM2.5	PM2.5 Total	Bio- CO2	NBio- CO2	Total CO2	CH4	N2O	CO2e
Category	lb/day										lb/day					
Off-Road	1.9009	17.4321	16.5752	0.0269		0.9586	0.9586		0.9013	0.9013	0.0000	2,553.3639	2,553.3639	0.6160		2,568.7643
Total	**1.9009**	**17.4321**	**16.5752**	**0.0269**		**0.9586**	**0.9586**		**0.9013**	**0.9013**	**0.0000**	**2,553.3639**	**2,553.3639**	**0.6160**		**2,568.7643**

3.4 Building Construction - 2021

Mitigated Construction Off-Site

	ROG	NOx	CO	SO2	Fugitive PM10	Exhaust PM10	PM10 Total	Fugitive PM2.5	Exhaust PM2.5	PM2.5 Total	Bio- CO2	NBio- CO2	Total CO2	CH4	N2O	CO2e
Category	lb/day										lb/day					
Hauling	0.0000	0.0000	0.0000	0.0000	0.0000	0.0000	0.0000	0.0000	0.0000	0.0000		0.0000	0.0000	0.0000		0.0000
Vendor	0.5967	18.1182	5.2504	0.0468	1.1972	0.0383	1.2355	0.3447	0.0366	0.3813		4,999.3613	4,999.3613	0.3227		5,007.4299
Worker	2.2840	1.5623	17.6395	0.0516	5.3541	0.0433	5.3974	1.4199	0.0399	1.4598		5,136.0827	5,136.0827	0.1511		5,139.8611
Total	**2.8807**	**19.6804**	**22.8898**	**0.0983**	**6.5513**	**0.0816**	**6.6329**	**1.7646**	**0.0765**	**1.8411**		**10,135.4440**	**10,135.4440**	**0.4739**		**10,147.2910**

3.4 Building Construction - 2022

Unmitigated Construction On-Site

	ROG	NOx	CO	SO2	Fugitive PM10	Exhaust PM10	PM10 Total	Fugitive PM2.5	Exhaust PM2.5	PM2.5 Total	Bio- CO2	NBio- CO2	Total CO2	CH4	N2O	CO2e
Category	lb/day										lb/day					
Off-Road	1.7062	15.6156	16.3634	0.0269		0.8090	0.8090		0.7612	0.7612		2,554.3336	2,554.3336	0.6120		2,569.6322
Total	**1.7062**	**15.6156**	**16.3634**	**0.0269**		**0.8090**	**0.8090**		**0.7612**	**0.7612**		**2,554.3336**	**2,554.3336**	**0.6120**		**2,569.6322**

3.4 Building Construction - 2022

Unmitigated Construction Off-Site

	ROG	NOx	CO	SO2	Fugitive PM10	Exhaust PM10	PM10 Total	Fugitive PM2.5	Exhaust PM2.5	PM2.5 Total	Bio- CO2	NBio- CO2	Total CO2	CH4	N2O	CO2e
Category	lb/day										lb/day					
Hauling	0.0000	0.0000	0.0000	0.0000	0.0000	0.0000	0.0000	0.0000	0.0000	0.0000		0.0000	0.0000	0.0000		0.0000
Vendor	0.5602	17.2188	4.9699	0.0463	1.1972	0.0335	1.2308	0.3447	0.0321	0.3768		4,954.9442	4,954.9442	0.3114		4,962.7293
Worker	2.1452	1.4109	16.2466	0.0497	5.3541	0.0419	5.3960	1.4199	0.0386	1.4585		4,955.5877	4,955.5877	0.1365		4,958.9990
Total	**2.7053**	**18.6297**	**21.2164**	**0.0961**	**6.5513**	**0.0754**	**6.6268**	**1.7646**	**0.0707**	**1.8353**		**9,910.5319**	**9,910.5319**	**0.4479**		**9,921.7283**

Mitigated Construction On-Site

	ROG	NOx	CO	SO2	Fugitive PM10	Exhaust PM10	PM10 Total	Fugitive PM2.5	Exhaust PM2.5	PM2.5 Total	Bio- CO2	NBio- CO2	Total CO2	CH4	N2O	CO2e
Category	lb/day										lb/day					
Off-Road	1.7062	15.6156	16.3634	0.0269		0.8090	0.8090		0.7612	0.7612	0.0000	2,554.3336	2,554.3336	0.6120		2,569.6322
Total	**1.7062**	**15.6156**	**16.3634**	**0.0269**		**0.8090**	**0.8090**		**0.7612**	**0.7612**	**0.0000**	**2,554.3336**	**2,554.3336**	**0.6120**		**2,569.6322**

3.4 Building Construction - 2022

Mitigated Construction Off-Site

	ROG	NOx	CO	SO2	Fugitive PM10	Exhaust PM10	PM10 Total	Fugitive PM2.5	Exhaust PM2.5	PM2.5 Total	Bio- CO2	NBio- CO2	Total CO2	CH4	N2O	CO2e
Category	lb/day										lb/day					
Hauling	0.0000	0.0000	0.0000	0.0000	0.0000	0.0000	0.0000	0.0000	0.0000	0.0000		0.0000	0.0000	0.0000		0.0000
Vendor	0.5602	17.2188	4.9699	0.0463	1.1972	0.0335	1.2308	0.3447	0.0321	0.3768		4,954.9442	4,954.9442	0.3114		4,962.7293
Worker	2.1452	1.4109	16.2466	0.0497	5.3541	0.0419	5.3960	1.4199	0.0386	1.4585		4,955.5877	4,955.5877	0.1365		4,958.9990
Total	**2.7053**	**18.6297**	**21.2164**	**0.0961**	**6.5513**	**0.0754**	**6.6268**	**1.7646**	**0.0707**	**1.8353**		**9,910.5319**	**9,910.5319**	**0.4479**		**9,921.7283**

3.4 Building Construction - 2023

Unmitigated Construction On-Site

	ROG	NOx	CO	SO2	Fugitive PM10	Exhaust PM10	PM10 Total	Fugitive PM2.5	Exhaust PM2.5	PM2.5 Total	Bio- CO2	NBio- CO2	Total CO2	CH4	N2O	CO2e
Category	lb/day										lb/day					
Off-Road	1.5728	14.3849	16.2440	0.0269		0.6997	0.6997		0.6584	0.6584		2,555.2099	2,555.2099	0.6079		2,570.4061
Total	**1.5728**	**14.3849**	**16.2440**	**0.0269**		**0.6997**	**0.6997**		**0.6584**	**0.6584**		**2,555.2099**	**2,555.2099**	**0.6079**		**2,570.4061**

3.4 Building Construction - 2023

Unmitigated Construction Off-Site

	ROG	NOx	CO	SO2	Fugitive PM10	Exhaust PM10	PM10 Total	Fugitive PM2.5	Exhaust PM2.5	PM2.5 Total	Bio- CO2	NBio- CO2	Total CO2	CH4	N2O	CO2e
Category	lb/day										lb/day					
Hauling	0.0000	0.0000	0.0000	0.0000	0.0000	0.0000	0.0000	0.0000	0.0000	0.0000		0.0000	0.0000	0.0000		0.0000
Vendor	0.4162	13.0411	4.4162	0.0448	1.1973	0.0159	1.2132	0.3447	0.0152	0.3599		4,801.0625	4,801.0625	0.2741		4,807.9160
Worker	2.0210	1.2760	14.9336	0.0479	5.3541	0.0407	5.3948	1.4199	0.0375	1.4574		4,774.2916	4,774.2916	0.1229		4,777.3632
Total	**2.4371**	**14.3172**	**19.3498**	**0.0927**	**6.5514**	**0.0566**	**6.6080**	**1.7647**	**0.0527**	**1.8174**		**9,575.3540**	**9,575.3540**	**0.3970**		**9,585.2792**

Mitigated Construction On-Site

	ROG	NOx	CO	SO2	Fugitive PM10	Exhaust PM10	PM10 Total	Fugitive PM2.5	Exhaust PM2.5	PM2.5 Total	Bio- CO2	NBio- CO2	Total CO2	CH4	N2O	CO2e
Category	lb/day										lb/day					
Off-Road	1.5728	14.3849	16.2440	0.0269		0.6997	0.6997		0.6584	0.6584	0.0000	2,555.2099	2,555.2099	0.6079		2,570.4061
Total	**1.5728**	**14.3849**	**16.2440**	**0.0269**		**0.6997**	**0.6997**		**0.6584**	**0.6584**	**0.0000**	**2,555.2099**	**2,555.2099**	**0.6079**		**2,570.4061**

3.4 Building Construction - 2023

Mitigated Construction Off-Site

	ROG	NOx	CO	SO2	Fugitive PM10	Exhaust PM10	PM10 Total	Fugitive PM2.5	Exhaust PM2.5	PM2.5 Total	Bio- CO2	NBio- CO2	Total CO2	CH4	N2O	CO2e
Category	lb/day										lb/day					
Hauling	0.0000	0.0000	0.0000	0.0000	0.0000	0.0000	0.0000	0.0000	0.0000	0.0000		0.0000	0.0000	0.0000		0.0000
Vendor	0.4162	13.0411	4.4162	0.0448	1.1973	0.0159	1.2132	0.3447	0.0152	0.3599		4,801.0625	4,801.0625	0.2741		4,807.9160
Worker	2.0210	1.2760	14.9336	0.0479	5.3541	0.0407	5.3948	1.4199	0.0375	1.4574		4,774.2916	4,774.2916	0.1229		4,777.3632
Total	**2.4371**	**14.3172**	**19.3498**	**0.0927**	**6.5514**	**0.0566**	**6.6080**	**1.7647**	**0.0527**	**1.8174**		**9,575.3540**	**9,575.3540**	**0.3970**		**9,585.2792**

3.5 Paving - 2023

Unmitigated Construction On-Site

	ROG	NOx	CO	SO2	Fugitive PM10	Exhaust PM10	PM10 Total	Fugitive PM2.5	Exhaust PM2.5	PM2.5 Total	Bio- CO2	NBio- CO2	Total CO2	CH4	N2O	CO2e
Category	lb/day										lb/day					
Off-Road	1.0327	10.1917	14.5842	0.0228		0.5102	0.5102		0.4694	0.4694		2,207.5841	2,207.5841	0.7140		2,225.4336
Paving	0.8272					0.0000	0.0000		0.0000	0.0000			0.0000			0.0000
Total	**1.8599**	**10.1917**	**14.5842**	**0.0228**		**0.5102**	**0.5102**		**0.4694**	**0.4694**		**2,207.5841**	**2,207.5841**	**0.7140**		**2,225.4336**

3.5 Paving - 2023

Unmitigated Construction Off-Site

	ROG	NOx	CO	SO2	Fugitive PM10	Exhaust PM10	PM10 Total	Fugitive PM2.5	Exhaust PM2.5	PM2.5 Total	Bio- CO2	NBio- CO2	Total CO2	CH4	N2O	CO2e
Category	lb/day										lb/day					
Hauling	0.0000	0.0000	0.0000	0.0000	0.0000	0.0000	0.0000	0.0000	0.0000	0.0000		0.0000	0.0000	0.0000		0.0000
Vendor	0.0000	0.0000	0.0000	0.0000	0.0000	0.0000	0.0000	0.0000	0.0000	0.0000		0.0000	0.0000	0.0000		0.0000
Worker	0.0633	0.0400	0.4677	1.5000e-003	0.1677	1.2800e-003	0.1689	0.0445	1.1700e-003	0.0456		149.5081	149.5081	3.8500e-003		149.6043
Total	**0.0633**	**0.0400**	**0.4677**	**1.5000e-003**	**0.1677**	**1.2800e-003**	**0.1689**	**0.0445**	**1.1700e-003**	**0.0456**		**149.5081**	**149.5081**	**3.8500e-003**		**149.6043**

Mitigated Construction On-Site

	ROG	NOx	CO	SO2	Fugitive PM10	Exhaust PM10	PM10 Total	Fugitive PM2.5	Exhaust PM2.5	PM2.5 Total	Bio- CO2	NBio- CO2	Total CO2	CH4	N2O	CO2e
Category	lb/day										lb/day					
Off-Road	1.0327	10.1917	14.5842	0.0228		0.5102	0.5102		0.4694	0.4694	0.0000	2,207.5841	2,207.5841	0.7140		2,225.4336
Paving	0.8272					0.0000	0.0000		0.0000	0.0000			0.0000			0.0000
Total	**1.8599**	**10.1917**	**14.5842**	**0.0228**		**0.5102**	**0.5102**		**0.4694**	**0.4694**	**0.0000**	**2,207.5841**	**2,207.5841**	**0.7140**		**2,225.4336**

3.5 Paving - 2023

Mitigated Construction Off-Site

	ROG	NOx	CO	SO2	Fugitive PM10	Exhaust PM10	PM10 Total	Fugitive PM2.5	Exhaust PM2.5	PM2.5 Total	Bio- CO2	NBio- CO2	Total CO2	CH4	N2O	CO2e
Category	lb/day										lb/day					
Hauling	0.0000	0.0000	0.0000	0.0000	0.0000	0.0000	0.0000	0.0000	0.0000	0.0000		0.0000	0.0000	0.0000		0.0000
Vendor	0.0000	0.0000	0.0000	0.0000	0.0000	0.0000	0.0000	0.0000	0.0000	0.0000		0.0000	0.0000	0.0000		0.0000
Worker	0.0633	0.0400	0.4677	1.5000e-003	0.1677	1.2800e-003	0.1689	0.0445	1.1700e-003	0.0456		149.5081	149.5081	3.8500e-003		149.6043
Total	**0.0633**	**0.0400**	**0.4677**	**1.5000e-003**	**0.1677**	**1.2800e-003**	**0.1689**	**0.0445**	**1.1700e-003**	**0.0456**		**149.5081**	**149.5081**	**3.8500e-003**		**149.6043**

3.6 Architectural Coating - 2022

Unmitigated Construction On-Site

	ROG	NOx	CO	SO2	Fugitive PM10	Exhaust PM10	PM10 Total	Fugitive PM2.5	Exhaust PM2.5	PM2.5 Total	Bio- CO2	NBio- CO2	Total CO2	CH4	N2O	CO2e
Category	lb/day										lb/day					
Archit. Coating	30.5463					0.0000	0.0000		0.0000	0.0000			0.0000			0.0000
Off-Road	0.2045	1.4085	1.8136	2.9700e-003		0.0817	0.0817		0.0817	0.0817		281.4481	281.4481	0.0183		281.9062
Total	**30.7508**	**1.4085**	**1.8136**	**2.9700e-003**		**0.0817**	**0.0817**		**0.0817**	**0.0817**		**281.4481**	**281.4481**	**0.0183**		**281.9062**

3.6 Architectural Coating - 2022

Unmitigated Construction Off-Site

	ROG	NOx	CO	SO2	Fugitive PM10	Exhaust PM10	PM10 Total	Fugitive PM2.5	Exhaust PM2.5	PM2.5 Total	Bio- CO2	NBio- CO2	Total CO2	CH4	N2O	CO2e
Category	lb/day										lb/day					
Hauling	0.0000	0.0000	0.0000	0.0000	0.0000	0.0000	0.0000	0.0000	0.0000	0.0000		0.0000	0.0000	0.0000		0.0000
Vendor	0.0000	0.0000	0.0000	0.0000	0.0000	0.0000	0.0000	0.0000	0.0000	0.0000		0.0000	0.0000	0.0000		0.0000
Worker	0.4299	0.2828	3.2561	9.9700e-003	1.0731	8.4000e-003	1.0815	0.2846	7.7400e-003	0.2923		993.1867	993.1867	0.0274		993.8704
Total	**0.4299**	**0.2828**	**3.2561**	**9.9700e-003**	**1.0731**	**8.4000e-003**	**1.0815**	**0.2846**	**7.7400e-003**	**0.2923**		**993.1867**	**993.1867**	**0.0274**		**993.8704**

Mitigated Construction On-Site

	ROG	NOx	CO	SO2	Fugitive PM10	Exhaust PM10	PM10 Total	Fugitive PM2.5	Exhaust PM2.5	PM2.5 Total	Bio- CO2	NBio- CO2	Total CO2	CH4	N2O	CO2e
Category	lb/day										lb/day					
Archit. Coating	30.5463					0.0000	0.0000		0.0000	0.0000			0.0000			0.0000
Off-Road	0.2045	1.4085	1.8136	2.9700e-003		0.0817	0.0817		0.0817	0.0817	0.0000	281.4481	281.4481	0.0183		281.9062
Total	**30.7508**	**1.4085**	**1.8136**	**2.9700e-003**		**0.0817**	**0.0817**		**0.0817**	**0.0817**	**0.0000**	**281.4481**	**281.4481**	**0.0183**		**281.9062**

3.6 Architectural Coating - 2022

Mitigated Construction Off-Site

	ROG	NOx	CO	SO2	Fugitive PM10	Exhaust PM10	PM10 Total	Fugitive PM2.5	Exhaust PM2.5	PM2.5 Total	Bio- CO2	NBio- CO2	Total CO2	CH4	N2O	CO2e
Category	lb/day										lb/day					
Hauling	0.0000	0.0000	0.0000	0.0000	0.0000	0.0000	0.0000	0.0000	0.0000	0.0000		0.0000	0.0000	0.0000		0.0000
Vendor	0.0000	0.0000	0.0000	0.0000	0.0000	0.0000	0.0000	0.0000	0.0000	0.0000		0.0000	0.0000	0.0000		0.0000
Worker	0.4299	0.2828	3.2561	9.9700e-003	1.0731	8.4000e-003	1.0815	0.2846	7.7400e-003	0.2923		993.1867	993.1867	0.0274		993.8704
Total	**0.4299**	**0.2828**	**3.2561**	**9.9700e-003**	**1.0731**	**8.4000e-003**	**1.0815**	**0.2846**	**7.7400e-003**	**0.2923**		**993.1867**	**993.1867**	**0.0274**		**993.8704**

3.6 Architectural Coating - 2023

Unmitigated Construction On-Site

	ROG	NOx	CO	SO2	Fugitive PM10	Exhaust PM10	PM10 Total	Fugitive PM2.5	Exhaust PM2.5	PM2.5 Total	Bio- CO2	NBio- CO2	Total CO2	CH4	N2O	CO2e
Category	lb/day										lb/day					
Archit. Coating	30.5463					0.0000	0.0000		0.0000	0.0000			0.0000			0.0000
Off-Road	0.1917	1.3030	1.8111	2.9700e-003		0.0708	0.0708		0.0708	0.0708		281.4481	281.4481	0.0168		281.8690
Total	**30.7380**	**1.3030**	**1.8111**	**2.9700e-003**		**0.0708**	**0.0708**		**0.0708**	**0.0708**		**281.4481**	**281.4481**	**0.0168**		**281.8690**

3.6 Architectural Coating - 2023

Unmitigated Construction Off-Site

	ROG	NOx	CO	SO2	Fugitive PM10	Exhaust PM10	PM10 Total	Fugitive PM2.5	Exhaust PM2.5	PM2.5 Total	Bio- CO2	NBio- CO2	Total CO2	CH4	N2O	CO2e
Category	lb/day										lb/day					
Hauling	0.0000	0.0000	0.0000	0.0000	0.0000	0.0000	0.0000	0.0000	0.0000	0.0000		0.0000	0.0000	0.0000		0.0000
Vendor	0.0000	0.0000	0.0000	0.0000	0.0000	0.0000	0.0000	0.0000	0.0000	0.0000		0.0000	0.0000	0.0000		0.0000
Worker	0.4050	0.2557	2.9930	9.6000e-003	1.0731	8.1600e-003	1.0812	0.2846	7.5100e-003	0.2921		956.8518	956.8518	0.0246		957.4674
Total	**0.4050**	**0.2557**	**2.9930**	**9.6000e-003**	**1.0731**	**8.1600e-003**	**1.0812**	**0.2846**	**7.5100e-003**	**0.2921**		**956.8518**	**956.8518**	**0.0246**		**957.4674**

Mitigated Construction On-Site

	ROG	NOx	CO	SO2	Fugitive PM10	Exhaust PM10	PM10 Total	Fugitive PM2.5	Exhaust PM2.5	PM2.5 Total	Bio- CO2	NBio- CO2	Total CO2	CH4	N2O	CO2e
Category	lb/day										lb/day					
Archit. Coating	30.5463					0.0000	0.0000		0.0000	0.0000			0.0000			0.0000
Off-Road	0.1917	1.3030	1.8111	2.9700e-003		0.0708	0.0708		0.0708	0.0708	0.0000	281.4481	281.4481	0.0168		281.8690
Total	**30.7380**	**1.3030**	**1.8111**	**2.9700e-003**		**0.0708**	**0.0708**		**0.0708**	**0.0708**	**0.0000**	**281.4481**	**281.4481**	**0.0168**		**281.8690**

3.6 Architectural Coating - 2023

Mitigated Construction Off-Site

	ROG	NOx	CO	SO2	Fugitive PM10	Exhaust PM10	PM10 Total	Fugitive PM2.5	Exhaust PM2.5	PM2.5 Total	Bio- CO2	NBio- CO2	Total CO2	CH4	N2O	CO2e
Category	lb/day										lb/day					
Hauling	0.0000	0.0000	0.0000	0.0000	0.0000	0.0000	0.0000	0.0000	0.0000	0.0000		0.0000	0.0000	0.0000		0.0000
Vendor	0.0000	0.0000	0.0000	0.0000	0.0000	0.0000	0.0000	0.0000	0.0000	0.0000		0.0000	0.0000	0.0000		0.0000
Worker	0.4050	0.2557	2.9930	9.6000e-003	1.0731	8.1600e-003	1.0812	0.2846	7.5100e-003	0.2921		956.8518	956.8518	0.0246		957.4674
Total	**0.4050**	**0.2557**	**2.9930**	**9.6000e-003**	**1.0731**	**8.1600e-003**	**1.0812**	**0.2846**	**7.5100e-003**	**0.2921**		**956.8518**	**956.8518**	**0.0246**		**957.4674**

4.0 Operational Detail - Mobile

4.1 Mitigation Measures Mobile

	ROG	NOx	CO	SO2	Fugitive PM10	Exhaust PM10	PM10 Total	Fugitive PM2.5	Exhaust PM2.5	PM2.5 Total	Bio- CO2	NBio- CO2	Total CO2	CH4	N2O	CO2e
Category	lb/day										lb/day					
Mitigated	3.7522	58.9864	58.3292	0.3858	26.0859	0.2194	26.3052	7.0380	0.2052	7.2432		40,322.6978	40,322.6978	1.7206		40,365.7138
Unmitigated	3.7522	58.9864	58.3292	0.3858	26.0859	0.2194	26.3052	7.0380	0.2052	7.2432		40,322.6978	40,322.6978	1.7206		40,365.7138

4.2 Trip Summary Information

	Average Daily Trip Rate			Unmitigated	Mitigated
Land Use	Weekday	Saturday	Sunday	Annual VMT	Annual VMT
City Park	0.00	0.00	0.00		
General Light Industry	2,706.87	2,706.87	2706.87	11,986,773	11,986,773
Parking Lot	0.00	0.00	0.00		
Total	2,706.87	2,706.87	2,706.87	11,986,773	11,986,773

4.3 Trip Type Information

	Miles			Trip %			Trip Purpose %		
Land Use	H-W or C-W	H-S or C-C	H-O or C-NW	H-W or C-W	H-S or C-C	H-O or C-NW	Primary	Diverted	Pass-by
City Park	16.60	8.40	6.90	33.00	48.00	19.00	66	28	6
General Light Industry	16.60	8.40	6.90	59.00	28.00	13.00	92	5	3
Parking Lot	16.60	8.40	6.90	0.00	0.00	0.00	0	0	0

4.4 Fleet Mix

Land Use	LDA	LDT1	LDT2	MDV	LHD1	LHD2	MHD	HHD	OBUS	UBUS	MCY	SBUS	MH
City Park	0.786000	0.000000	0.000000	0.000000	0.000000	0.000000	0.080000	0.134000	0.000000	0.000000	0.000000	0.000000	0.000000
General Light Industry	0.786000	0.000000	0.000000	0.000000	0.000000	0.000000	0.080000	0.134000	0.000000	0.000000	0.000000	0.000000	0.000000
Parking Lot	0.786000	0.000000	0.000000	0.000000	0.000000	0.000000	0.080000	0.134000	0.000000	0.000000	0.000000	0.000000	0.000000

5.0 Energy Detail

Historical Energy Use: N

5.1 Mitigation Measures Energy

	ROG	NOx	CO	SO2	Fugitive PM10	Exhaust PM10	PM10 Total	Fugitive PM2.5	Exhaust PM2.5	PM2.5 Total	Bio- CO2	NBio- CO2	Total CO2	CH4	N2O	CO2e
Category	lb/day										lb/day					
NaturalGas Mitigated	0.2919	2.6532	2.2287	0.0159		0.2016	0.2016		0.2016	0.2016		3,183.8498	3,183.8498	0.0610	0.0584	3,202.7698
NaturalGas Unmitigated	0.2919	2.6532	2.2287	0.0159		0.2016	0.2016		0.2016	0.2016		3,183.8498	3,183.8498	0.0610	0.0584	3,202.7698

5.2 Energy by Land Use - NaturalGas

Unmitigated

	NaturalGas Use	ROG	NOx	CO	SO2	Fugitive PM10	Exhaust PM10	PM10 Total	Fugitive PM2.5	Exhaust PM2.5	PM2.5 Total	Bio- CO2	NBio- CO2	Total CO2	CH4	N2O	CO2e
Land Use	kBTU/yr	lb/day										lb/day					
City Park	0	0.0000	0.0000	0.0000	0.0000		0.0000	0.0000		0.0000	0.0000		0.0000	0.0000	0.0000	0.0000	0.0000
General Light Industry	27062.7	0.2919	2.6532	2.2287	0.0159		0.2016	0.2016		0.2016	0.2016		3,183.8498	3,183.8498	0.0610	0.0584	3,202.7698
Parking Lot	0	0.0000	0.0000	0.0000	0.0000		0.0000	0.0000		0.0000	0.0000		0.0000	0.0000	0.0000	0.0000	0.0000
Total		**0.2919**	**2.6532**	**2.2287**	**0.0159**		**0.2016**	**0.2016**		**0.2016**	**0.2016**		**3,183.8498**	**3,183.8498**	**0.0610**	**0.0584**	**3,202.7698**

Mitigated

	NaturalGas Use	ROG	NOx	CO	SO2	Fugitive PM10	Exhaust PM10	PM10 Total	Fugitive PM2.5	Exhaust PM2.5	PM2.5 Total	Bio- CO2	NBio- CO2	Total CO2	CH4	N2O	CO2e
Land Use	kBTU/yr	lb/day										lb/day					
City Park	0	0.0000	0.0000	0.0000	0.0000		0.0000	0.0000		0.0000	0.0000		0.0000	0.0000	0.0000	0.0000	0.0000
General Light Industry	27.0627	0.2919	2.6532	2.2287	0.0159		0.2016	0.2016		0.2016	0.2016		3,183.8498	3,183.8498	0.0610	0.0584	3,202.7698
Parking Lot	0	0.0000	0.0000	0.0000	0.0000		0.0000	0.0000		0.0000	0.0000		0.0000	0.0000	0.0000	0.0000	0.0000
Total		**0.2919**	**2.6532**	**2.2287**	**0.0159**		**0.2016**	**0.2016**		**0.2016**	**0.2016**		**3,183.8498**	**3,183.8498**	**0.0610**	**0.0584**	**3,202.7698**

6.0 Area Detail

6.1 Mitigation Measures Area

	ROG	NOx	CO	SO2	Fugitive PM10	Exhaust PM10	PM10 Total	Fugitive PM2.5	Exhaust PM2.5	PM2.5 Total	Bio- CO2	NBio- CO2	Total CO2	CH4	N2O	CO2e
Category	lb/day										lb/day					
Mitigated	12.4100	5.2000e-004	0.0571	0.0000		2.0000e-004	2.0000e-004		2.0000e-004	2.0000e-004		0.1224	0.1224	3.2000e-004		0.1305
Unmitigated	12.4100	5.2000e-004	0.0571	0.0000		2.0000e-004	2.0000e-004		2.0000e-004	2.0000e-004		0.1224	0.1224	3.2000e-004		0.1305

6.2 Area by SubCategory

Unmitigated

	ROG	NOx	CO	SO2	Fugitive PM10	Exhaust PM10	PM10 Total	Fugitive PM2.5	Exhaust PM2.5	PM2.5 Total	Bio- CO2	NBio- CO2	Total CO2	CH4	N2O	CO2e
SubCategory	lb/day										lb/day					
Architectural Coating	1.4227					0.0000	0.0000		0.0000	0.0000			0.0000			0.0000
Consumer Products	10.9820					0.0000	0.0000		0.0000	0.0000			0.0000			0.0000
Landscaping	5.2900e-003	5.2000e-004	0.0571	0.0000		2.0000e-004	2.0000e-004		2.0000e-004	2.0000e-004		0.1224	0.1224	3.2000e-004		0.1305
Total	**12.4099**	**5.2000e-004**	**0.0571**	**0.0000**		**2.0000e-004**	**2.0000e-004**		**2.0000e-004**	**2.0000e-004**		**0.1224**	**0.1224**	**3.2000e-004**		**0.1305**

6.2 Area by SubCategory

Mitigated

	ROG	NOx	CO	SO2	Fugitive PM10	Exhaust PM10	PM10 Total	Fugitive PM2.5	Exhaust PM2.5	PM2.5 Total	Bio- CO2	NBio- CO2	Total CO2	CH4	N2O	CO2e
SubCategory	lb/day										lb/day					
Architectural Coating	1.4227					0.0000	0.0000		0.0000	0.0000			0.0000			0.0000
Consumer Products	10.9820					0.0000	0.0000		0.0000	0.0000			0.0000			0.0000
Landscaping	5.2900e-003	5.2000e-004	0.0571	0.0000		2.0000e-004	2.0000e-004		2.0000e-004	2.0000e-004		0.1224	0.1224	3.2000e-004		0.1305
Total	**12.4099**	**5.2000e-004**	**0.0571**	**0.0000**		**2.0000e-004**	**2.0000e-004**		**2.0000e-004**	**2.0000e-004**		**0.1224**	**0.1224**	**3.2000e-004**		**0.1305**

7.0 Water Detail

7.1 Mitigation Measures Water

8.0 Waste Detail

8.1 Mitigation Measures Waste

9.0 Operational Offroad

Equipment Type	Number	Hours/Day	Days/Year	Horse Power	Load Factor	Fuel Type

10.0 Stationary Equipment

Fire Pumps and Emergency Generators

Equipment Type	Number	Hours/Day	Hours/Year	Horse Power	Load Factor	Fuel Type

Boilers

Equipment Type	Number	Heat Input/Day	Heat Input/Year	Boiler Rating	Fuel Type

User Defined Equipment

Equipment Type	Number

11.0 Vegetation

APPENDIX B.3

Energy Consumption Estimates

On-road Mobile (Operational) Energy Usage

Unmitigated:

Step 1:

Therefore:

Average Daily VMT:

31,783 Source: Traffic Study

Step 2: Given:

Fleet Mix (CalEEMod Output)

LDA	LDT1	LDT2	MDV	LHD1	LHD2	MHD	HHD	OBUS	UBUS	MCY	SBUS	MH
78.6000%	0.0000%	0.0000%	0.0000%	0.0000%	0.0000%	0.0000%	21.4000%	0.0000%	0.0000%	0.0000%	0.0000%	0.0000%

And:

Gasoline MPG Factors for each Vehicle Class - Year 2023 (EMFAC2017 Output)

LDA	LDT1	LDT2	MDV	MCY	MH
31.11312056	26.7922	25.19389	20.44271367	35.75039431	5.202069986

Diesel MPG Factors for each Vehicle Class - Year 2023 (EMFAC2017 Output)

LHD1	LHD2	MHD	HHD	OBUS	UBUS	SBUS
22.07550589	19.8821	10.16203	6.05090806	5.063316024	6.325036602	7.682109

Therefore:

Weighted Average MPG Factors

Gasoline: **31.1** Diesel: **6.1**

Step 3: **Therefore:**

803 **daily gallons of gasoline** **1,124** **daily gallons of diesel**

or

293,069	**annual gallons of gasoline**	**410,284**	**annual gallons of diesel**

Off-road Mobile (Construction) Energy Usage

Note: For the sake of simplicity, and as a conservative estimation, it was assumed that all off-road vehicles use diesel fuel as an energy source.
Demolition, Site preparation and grading off-road mobile vehicle on-site gallons of fuel are calculated below.

Given Factor:	**157.3**	**metric tons**	**CO2**	**(provided in CalEEMod Output File)**
Conversion Factor:	2204.6262	pounds	per metric ton	
Intermediate Result:	**346,812**	**pounds**	**CO2**	
Conversion Factor:	22.38	pounds	CO2 per 1 gallon of diesel fuel	Source: U.S. EIA, 2016
Final Result:	**15,496.53**	**gallons**	**diesel fuel**	http://www.eia.gov/tools/faqs/faq.cfm?id=307&t=11

Mitigated Onsite Scenario	Total CO2 (MT/yr) (provided in CalEEMod Output File)

On-road Mobile (Construction) Energy Usage - Site Preparation

Step 1: **Total Daily Worker Trips (CalEEMod Output)**

18

Worker Trip Length (miles) (CalEEMod Output)

14.7

Therefore:

Average Worker Daily VMT:

265

Step 2: Given:

Assumed Fleet Mix for Workers (Percentage mix is provided on Appendix A: Calculation Details for CalEEMOD p. 15)

LDA	LDT1	LDT2
0.5	0.25	0.25

And:

Gasoline MPG Factors for each Vehicle Class (from EMFAC2017) - Year 2023

LDA	LDT1	LDT2
31.113121	**26.7922**	**25.19389**

Therefore:

Weighted Average Worker MPG Factor

28.6

Step 3: **Therefore:**

9.3 **Worker daily gallons of gasoline**

Step 4: 20 **# of Days (CalEEMod Output)**

Therefore:

Result: **185** **Total gallons of gasoline**

On-road Mobile (Construction) Energy Usage - Grading

Step 1: **Total Daily Worker Trips (CalEEMod Output)**

20

Worker Trip Length (miles) (CalEEMod Output)

14.7

Therefore:

Average Worker Daily VMT:

294

Step 2: Given:

Assumed Fleet Mix for Workers (Percentage mix is provided on Appendix A: Calculation Details for CalEEMOD p. 15)

LDA	LDT1	LDT2
0.5	0.25	0.25

And:

Gasoline MPG Factors for each Vehicle Class (from EMFAC2017) - Year 2023

LDA	LDT1	LDT2
31.113121	26.7922	25.19389

Therefore:

Weighted Average Worker MPG Factor

28.6

Step 3: **Therefore:**

10.3 **Worker daily gallons of gasoline**

Step 4: 45 **# of Days (CalEEMod Output)**

Therefore:

Result: **463** **Total gallons of gasoline**

On-road Mobile (Construction) Energy Usage - Building Construction

Step 1:

Total Daily Worker Trips (CalEEMod Output)

479	5%	**24**

Total Daily Vendor Trips (CalEEMod Output)

187	5%	**9**

Note: Assumes 5% of Project site under construction at given point in time (on average) until buildout.

Worker Trip Length (miles) (CalEEMod Output)

14.7

Vendor Trip Length (miles) (CalEEMod Output)

6.9

Therefore:

Average Worker Daily VMT:

352

Average Vendor Daily VMT:

65

Step 2: Given:

Assumed Fleet Mix for Workers (Percentage mix is provided on Appendix A: Calculation Details for CalEEMOD p. 15)

LDA	LDT1	LDT2
0.5	0.25	0.25

Assumed Fleet Mix for Vendors

Fleet Mix for Workers (CalEEMod Output)

MHD	HHD
0%	100%

And:

MPG Factors for each Vehicle Class (from EMFAC2017) - Year 2023

Gasoline:

LDA	LDT1	LDT2
31.1131206	26.7922	25.19389

Diesel:

MHD	HHD
10.16202951	6.050908

Therefore:

Weighted Average Worker (Gasoline) MPG Factor

28.6

Weighted Average Vendor (Diesel) MPG Factor

6.1

Step 3:

Therefore:

12 **Worker daily gallons of gasoline**

Therefore:

11 **Vendor daily gallons of diesel**

Step 4:

440 **# of Days (CalEEMod Output)**

Therefore:

5,425 **Total gallons of gasoline**

Therefore:

4,691 **Total gallons of diesel**

On-road Mobile (Construction) Energy Usage - Paving

Step 1: **Total Daily Worker Trips (CalEEMod Output)**

15

Worker Trip Length (miles) (CalEEMod Output)

14.7

Therefore:

Average Worker Daily VMT:

221

Step 2: Given:

Assumed Fleet Mix for Workers (Percentage mix is provided on Appendix A: Calculation Details for CalEEMOD p. 15)

LDA	LDT1	LDT2
0.5	0.25	0.25

And:

Gasoline MPG Factors for each Vehicle Class (from EMFAC2017) - Year 2023

LDA	LDT1	LDT2
31.113121	26.7922	25.19389

Therefore:

Weighted Average Worker MPG Factor

28.6

Step 3: **Therefore:**

7.7 **Worker daily gallons of gasoline**

Step 4: 35 **# of Days (CalEEMod Output)**

Therefore:

Result: **270** **Total gallons of gasoline**

On-road Mobile (Construction) Energy Usage - Architectural Coating

Step 1: **Total Daily Worker Trips (CalEEMod Output)**

96	5%	5

Note: Assumes 5% of Plan Area under construction at given point in time (on average) until buildout.

Worker Trip Length (miles) (CalEEMod Output)

14.7

Therefore:

Average Worker Daily VMT:

71

Step 2: Given:

Assumed Fleet Mix for Workers (Percentage mix is provided on Appendix A: Calculation Details for CalEEMOD p. 15)

LDA	LDT1	LDT2
0.5	0.25	0.25

And:

Gasoline MPG Factors for each Vehicle Class (EMFAC2017 Output) - Year 2023

LDA	LDT1	LDT2
31.113121	26.7922	25.19389

Therefore:

Weighted Average Worker MPG Factor

28.6

Step 3: **Therefore:**

2.5 **Worker daily gallons of gasoline**

Step 4: 170 **# of Days (CalEEMod Output)**

Therefore:

Result: **420** **Total gallons of gasoline**

EMFAC2017 (v1.0.2) Emissions Inventory
Region Type: County
Region: LOS ANGELES
Calendar Year: 2023
Season: Annual
Vehicle Classification: EMFAC2011 Categories
Units: miles/day for VMT, trips/day for Trips, tons/day for Emissions, 1000 gallons/day for Fuel Consumption. Note 'day' in the unit is operation day.

Region	Calendar Year	Vehicle Category	Model Year	Speed	Fuel	Population	VMT	Fuel Consumption	MPG		
LOS ANGELES	2023	All Other Buses	Aggregated	Aggregated	DSL	2453.780294	150763	14.31029644	**10.53528**		
LOS ANGELES	2023	LDA	Aggregated	Aggregated	GAS	4079718.343	1.54E+08	4943.660073	**31.11312**		
LOS ANGELES	2023	LDA	Aggregated	Aggregated	DSL	37620.08952	1468847	30.23068474	**48.58796**		
LOS ANGELES	2023	LDA	Aggregated	Aggregated	ELEC	93246.42895	3877173	0	**#DIV/0!**		
LOS ANGELES	2023	LDT1	Aggregated	Aggregated	GAS	480759.8328	17733494	661.8900744	**26.7922**		
LOS ANGELES	2023	LDT1	Aggregated	Aggregated	DSL	257.6434833	6250.547	0.282612153	**22.11705**		
LOS ANGELES	2023	LDT1	Aggregated	Aggregated	ELEC	4694.098206	199559.1	0	**#DIV/0!**		
LOS ANGELES	2023	LDT2	Aggregated	Aggregated	GAS	1420577.957	53205335	2111.835151	**25.19389**		
LOS ANGELES	2023	LDT2	Aggregated	Aggregated	DSL	9886.840992	410652.3	11.47875608	**35.77498**		
LOS ANGELES	2023	LDT2	Aggregated	Aggregated	ELEC	18529.7361	593086.6	0	**#DIV/0!**		
LOS ANGELES	2023	LHD1	Aggregated	Aggregated	GAS	107353.7456	3873368	366.2400016	**10.57604**		
LOS ANGELES	2023	LHD1	Aggregated	Aggregated	DSL	71099.52621	2976583	134.8364525	**22.07551**		
LOS ANGELES	2023	LHD2	Aggregated	Aggregated	GAS	18246.17882	636806.1	69.11659593	**9.213505**		
LOS ANGELES	2023	LHD2	Aggregated	Aggregated	DSL	28768.3231	1158888	58.28800151	**19.8821**		
LOS ANGELES	2023	MCY	Aggregated	Aggregated	GAS	188536.3972	1317300	36.84713681	**35.75039**		
LOS ANGELES	2023	MDV	Aggregated	Aggregated	GAS	951148.1238	33069619	1617.672656	**20.44271**		
LOS ANGELES	2023	MDV	Aggregated	Aggregated	DSL	21713.14607	843603.4	30.49995102	**27.65917**		
LOS ANGELES	2023	MDV	Aggregated	Aggregated	ELEC	10527.8392	347358.6	0	**#DIV/0!**		
LOS ANGELES	2023	MH	Aggregated	Aggregated	GAS	19632.08957	198292.7	38.11803067	**5.20207**		
LOS ANGELES	2023	MH	Aggregated	Aggregated	DSL	6442.422087	66663.72	6.253802478	**10.65971**		
LOS ANGELES	2023	Motor Coach	Aggregated	Aggregated	DSL	671.8209096	94677.59	14.10776679	**6.711026**		
LOS ANGELES	2023	OBUS	Aggregated	Aggregated	GAS	4020.759353	164000.6	32.38996349	**5.063316**		
LOS ANGELES	2023	PTO	Aggregated	Aggregated	DSL	0	79942.03	15.4668659	**5.168599**		
LOS ANGELES	2023	SBUS	Aggregated	Aggregated	GAS	1498.084511	60378.45	6.505272296	**9.281464**		
LOS ANGELES	2023	SBUS	Aggregated	Aggregated	DSL	3895.844354	123040.6	16.01651846	**7.682109**	**MHD**	
LOS ANGELES	2023	T6 Ag	Aggregated	Aggregated	DSL	11.67476155	97.07385	0.011080203	**8.761017**	**10.16203**	
LOS ANGELES	2023	T6 CAIRP heavy	Aggregated	Aggregated	DSL	349.6383777	68307.7	5.741529689	**11.89713**		
LOS ANGELES	2023	T6 CAIRP small	Aggregated	Aggregated	DSL	184.7839559	9654.964	0.864549799	**11.16762**		
LOS ANGELES	2023	T6 instate construction hea	Aggregated	Aggregated	DSL	2618.326334	172411.6	16.16246622	**10.66741**		
LOS ANGELES	2023	T6 instate construction sma	Aggregated	Aggregated	DSL	8139.325817	456545.6	42.39392411	**10.76913**		
LOS ANGELES	2023	T6 instate heavy	Aggregated	Aggregated	DSL	10786.51244	1499121	130.4795504	**11.48932**		
LOS ANGELES	2023	T6 instate small	Aggregated	Aggregated	DSL	38175.77868	2025193	186.7456954	**10.84465**		
LOS ANGELES	2023	T6 OOS heavy	Aggregated	Aggregated	DSL	202.1917854	39591.66	3.325627066	**11.90502**		
LOS ANGELES	2023	T6 OOS small	Aggregated	Aggregated	DSL	105.7912941	5491.948	0.492296399	**11.15578**		
LOS ANGELES	2023	T6 Public	Aggregated	Aggregated	DSL	4562.406266	71552.49	8.604352208	**8.315849**		
LOS ANGELES	2023	T6 utility	Aggregated	Aggregated	DSL	1029.350505	17254.27	1.751558673	**9.850811**		
LOS ANGELES	2023	T6TS	Aggregated	Aggregated	GAS	14791.98296	816335	159.4208227	**5.12063**	**HHD**	
LOS ANGELES	2023	T7 Ag	Aggregated	Aggregated	DSL	5.450542727	89.56607	0.015745035	**5.688528**	**6.050908**	
LOS ANGELES	2023	T7 CAIRP	Aggregated	Aggregated	DSL	6343.347191	1154321	161.4619094	**7.149182**		
LOS ANGELES	2023	T7 CAIRP construction	Aggregated	Aggregated	DSL	679.1643287	123844.8	16.39059596	**7.555842**		
LOS ANGELES	2023	T7 NNOOS	Aggregated	Aggregated	DSL	7121.061939	1407158	187.176984	**7.517796**		
LOS ANGELES	2023	T7 NOOS	Aggregated	Aggregated	DSL	2513.987908	453542	65.04522279	**6.972719**		
LOS ANGELES	2023	T7 POLA	Aggregated	Aggregated	DSL	8519.119436	1135876	176.1245414	**6.449277**		
LOS ANGELES	2023	T7 Public	Aggregated	Aggregated	DSL	5566.242618	112766.5	19.11724284	**5.898678**		
LOS ANGELES	2023	T7 Single	Aggregated	Aggregated	DSL	6149.267846	402604	58.13099302	**6.925807**		
LOS ANGELES	2023	T7 single construction	Aggregated	Aggregated	DSL	4427.380162	307236.1	43.27968855	**7.098851**		
LOS ANGELES	2023	T7 SWCV	Aggregated	Aggregated	DSL	1267.904477	51803.42	25.53003199	**2.029117**		
LOS ANGELES	2023	T7 SWCV	Aggregated	Aggregated	NG	2800.075382	114024.8	50.24085774	**2.269564**		
LOS ANGELES	2023	T7 tractor	Aggregated	Aggregated	DSL	12343.86745	1684212	222.0396063	**7.585188**		
LOS ANGELES	2023	T7 tractor construction	Aggregated	Aggregated	DSL	3720.516306	253442.7	35.83999783	**7.071505**		
LOS ANGELES	2023	T7 utility	Aggregated	Aggregated	DSL	410.896106	8338.94	1.314768721	**6.342514**		
LOS ANGELES	2023	T7IS	Aggregated	Aggregated	GAS	53.11282542	6012.489	1.428465935	**4.209053**		
LOS ANGELES	2023	UBUS	Aggregated	Aggregated	GAS	466.4659792	33779.5	7.764629988	**4.350433**		
LOS ANGELES	2023	UBUS	Aggregated	Aggregated	DSL	37.1389	5105.145	0.807132926	**6.325037**		
LOS ANGELES	2023	UBUS	Aggregated	Aggregated	ELEC	14	1217.554	0	**#DIV/0!**		
LOS ANGELES	2023	UBUS	Aggregated	Aggregated	NG	4202.367788	445285.1	113.219219	**3.932947**		

APPENDIX B.4

Air Toxics Health Risk Assessment (HRA)

ANALYSIS OF PUBLIC HEALTH RISKS

FOR THE

5175 VINCENT AVENUE PROJECT

IRWINDALE, CALIFORNIA

DECEMBER 1, 2020

PROJECT TITLE

5175 Vincent Avenue Project

PREPARED BY:

De Novo Planning Group
1020 Suncast Lane Suite 106
El Dorado Hills, CA 95762

CONTACT PERSON AND PHONE NUMBER

Steve McMurtry – Principal Planner
De Novo Planning Group
1020 Suncast Lane Suite 106
El Dorado Hills, CA 95762
smcmurtry@denovoplanning.com
(916) 580-9818

CONTENTS

INTRODUCTION 2
PROJECT LOCATION AND SETTING 2
PROJECT BACKGROUND 2
PROJECT DESCRIPTION 2
GENERAL PLAN AND ZONING DESIGNATIONS 3
SURROUNDING LAND USES 3
SCOPE OF RISK ASSESMENT 4
SIGNIFICANCE CRITERIA 4
EMISSION SOURCES AND EXPOSURE 5
DAILY TRUCK TRIPS 7
EMISSION RATES 7
EXPOSURE ASSESSMENT 8
RISK ASSESSMENT 9
RISK ASSESSMENT RESULTS 10
CUMULATIVE RISKS 15
REPORT PREPARERS & REFERENCES 15

FIGURES:

FIGURE-1: PROJECT-GENERATED MAXIMUM RESIDENTIAL CANCER RISK PER MILLION PERSONS (30-YEAR) - 95TH PERCENTILE METHOD 12
FIGURE-2: PROJECT-GENERATED MAXIMUM WORKPLACE CANCER RISK (25-YEAR) - 95TH PERCENTILE METHOD 13
FIGURE-3: PROJECT-GENERATED CHRONIC MAXIMUM RISK (LONG-TERM EXPOSURE; HAZARD INDEX) 14

APPENDICES:

APPENDIX 1: EMISSION RATES AND EMISSIONS CALCULATIONS
APPENDIX 2: WIND ROSE

INTRODUCTION

This Health Risk Assessment (HRA) was prepared to assess potential public health risks that may be present at the proposed 5175 Vincent Avenue Project in the city of Irwindale, Los Angeles County, California. This report analyzes the emissions of toxic air pollutants within the project area and their impacts on public health.

PROJECT LOCATION AND SETTING

The 5175 Vincent Avenue Project site is located north of a Los Angeles County-owned pit, east of Allen Drive, south of East Arrow Highway, and west of Vincent Avenue in Irwindale, California. The Project site totals approximately 26.05 acres and is comprised of two vacant parcels; one of which is an undeveloped, recently filled, former aggregate mine pit known as the Manning Pit. The 2018 Assessor's Parcel Numbers (APNs) for the Project site are 8417-034-015 and 8417-034-016 (formally APNs: 8417-034-904, 8417-034-910, and 8417-034-911). The elevation of the site ranges from approximately 400 feet to 460 feet above mean sea level (MSL). The property is immediately adjacent to unincorporated Los Angeles County to the south and east.

PROJECT BACKGROUND

The Project site is the general location of the Irwindale Pit No. 1 (Manning Brothers Pit) Project, which proposed reclamation of the historic mining pit. Mining of the Manning Pit began in the 1930s and was completed in the 1970s. The City of Irwindale acquired the northern portion of the pit (approximately 37 acres) in the late 1980s from the County of Los Angeles, and the County retained the remainder (approximately 45 acres) which is currently used as a supplemental water recharge basin in conjunction with the Irwindale Recharge Basin, located just to the west.

After its acquisition, the City began backfilling the site with a variety of construction debris. However, backfilling was stopped in 1992 when it was discovered that improper filling methods had been used by the contractor. In 2008, the City approved new remediation plans and an Initial Study/Mitigated Negative Declaration (which was subsequently amended in 2009) to excavate the improperly filled site and backfill again according to all local, regional, state and federal standards.

PROJECT DESCRIPTION

The Project proposes development of a 545,735-sf concrete tilt-up industrial warehouse building on the 26.05-acre site. Approximately 540,447 sf would be ground floor area and 5,000 sf would be mezzanine area.

A high-cube warehouse is a building that typically has at least 200,000 gross sf of floor area, has a ceiling height of 24 feet or more, and is used primarily for the storage and/or consolidation of manufactured goods (and to a lesser extent, raw materials) prior to their distribution to retail locations or other warehouses. Given that the proposed Project includes an industrial warehouse building totaling 545,735 square feet, it is classified as a high-cube warehouse building.

A typical high-cube warehouse has a high level of on-site automation and logistics management. The automation and logistics enable highly-efficient processing of goods through the high-cube warehouse. High-cube warehouses are generally grouped into five types: transload facility, short-term storage facility, fulfillment center, parcel hub, and cold storage facility. However, the proposed Project, specifically excludes fulfillment center, parcel hub, and cold storage facility as a potential end user of the building. The applicant has indicated that these three uses (fulfillment center, parcel hub, and cold storage facility) are not proposed uses, and the applicant has agreed to conditions on the Project that would prohibit these uses at the Project site.

End users could include light industrial or manufacturing uses. However, there is not a specific end user/business established for the proposed building at this time. There are a variety of possible businesses that could occupy and operate their business from the proposed building. The uses for the proposed building may include any of the following: Manufacturing Warehouse, Light Industrial, High-Cube Short-term, and High-Cube Transload. These uses are allowed under the Industrial/Business Park land use designation and M-2 "Heavy Manufacturing" zoning designation.

Access to the Project site would be provided at two locations: one entrance off Vincent Avenue in the southeastern corner of the site, and another entrance off Vincent Avenue in the northeastern corner of the site. Each of these access points allow for emergency vehicle access. As part of the Project, Vincent Avenue along the Project site's frontage would be improved to its ultimate half-section width, including landscaping and parkway improvements, as required by the City of Irwindale. The improvements would provide continuous sidewalks adjacent to the site that would connect to existing sidewalks within the area. Bicycle parking would also be provided.

The site plan includes 199 standard parking stalls and 181 trailer stalls, which would be provided along the perimeter of the site. The trailer parking stalls would be located along the western and eastern boundaries of the site, while the standard parking stalls would be located along the northern and southern boundaries. Two gates would be provided: one near the northwestern corner of the site, and one near the southwestern corner of the site.

GENERAL PLAN AND ZONING DESIGNATIONS

The Project site is designated as "Industrial/Business Park" and "Residential" by the City's General Plan Land Use Map and is zoned as M-2 "Heavy Manufacturing. The Project applicant is requesting a General Plan Amendment to change the current designation from "Residential" to "Industrial/Business Park" for a 6.93-acre portion of APN 8417-034-016. The Project site is also subject to the Irwindale Commercial & Industrial Design Guidelines.

SURROUNDING LAND USES

Residential uses are located to the east and west of the Project site. Commercial uses are located to the north of the Project site. Land to the south of the Project site would remain undeveloped.

The nearest existing residential receptors are located just to the east of the Project site, beyond Vincent Avenue. The nearest non-residential receptors are located just to the north of the Project site.

SCOPE OF RISK ASSESSMENT

Preparation of risk assessments is a three-step process. The first step is to identify potential contaminants that may lead to public health risks. The second step is to assess the magnitude of contaminants that may reach the public (exposure assessment). The last step is to calculate the magnitude of the health risk as a result of exposure to harmful contaminants on the basis of the toxicology of the contaminants.

The Office of Environmental Health Hazard Assessment and the South Coast Air Quality Management District (SCAQMD) provide guidance on the procedures that should be used, including, toxicological data for individual contaminants. While this risk assessment uses certain procedures and data from these Guidelines, this assessment is not intended to satisfy the reporting requirements under AB-2588 "Air Toxics" Hot Spots program.

The health risks that are evaluated in this study include:

- Residential Cancer Risk (30-year exposure);
- Workplace Cancer Risk (25-year exposure; start at age 16); and
- Acute and Chronic Hazard Indices.

The 30-year risk applies to residential areas where exposure may potentially occur 24 hours/day, 365 days/year. The 25-year risk is applicable to workplace exposure and therefore accounts for a reduced exposure for the fact that individuals typically would be exposed only during working hours. Non-cancer risks can be described as acute (short-term, exposure) or chronic health impacts.

SIGNIFICANCE CRITERIA

The following significance criteria shown in Table 1, based on guidance from the SCAQMD, are used in this report to assess the significance of public health risks.

TABLE 1: THRESHOLDS OF SIGNIFICANCE FOR PUBLIC HEALTH RISKS

Risk Metric	*Significance Threshold*
Residential Cancer Risk	10 per million
Workplace Cancer Risk	10 per million
Chronic and Acute non-cancer hazard Indices	non-cancer health hazard exposure index of 1.0

SOURCE: SCAQMD, 2015.

As shown in Table 1, a project that contributes a cancer risk in excess of 10 new cases in a population of one million persons at identified receptors, or a non-cancer hazard index of greater than or equal to 1.0 would be considered to have a significant project-level impact.

EMISSION SOURCES AND EXPOSURE

The source of toxic air pollutants (TACs) from the proposed Project is diesel particulate matter (DPM) from on-site truck idle and mobile emissions, and off-site mobile emissions. The Project would not operate with trucks that contain Truck Refrigeration Units (TRUs), since the proposed project would not allow for a cold storage warehouse facility.

Based on numerous studies by the California Air Resources Board (ARB), DPM represents the largest single contributor to public health risks. Additionally, in its comprehensive assessment of diesel exhaust, OEHHA analyzed more than 30 studies of people who worked around diesel equipment, including truck drivers, railroad workers, and equipment operators. The studies showed these workers were more likely to develop lung cancer than workers who were not exposed to diesel emissions. These studies provide strong evidence that long-term occupational exposure to diesel exhaust increases the risk of lung cancer. Exposure to diesel exhaust can have immediate health effects. Diesel exhaust can irritate the eyes, nose, throat, and lungs, and it can cause coughs, headaches, lightheadedness, and nausea. In studies with human volunteers, diesel exhaust particles made people with allergies more susceptible to the materials to which they are allergic, such as dust and pollen. Exposure to diesel exhaust also causes inflammation in the lungs, which may aggravate chronic respiratory symptoms and increase the frequency or intensity of asthma attacks.

CARB identified DPM as a TAC in 1998. Mobile sources (including trucks, buses, automobiles, trains, ships, and farm equipment) are by far the largest source of diesel emissions. The exhaust from diesel engines includes hundreds of different gaseous and particulate components, many of which are toxic. Diesel exhaust is composed of two phases, either gas or particulate; both contribute to the risk. The gas phase is composed of many of the urban HAPs, such as acetaldehyde, acrolein, benzene, 1,3-butadiene, formaldehyde, and polycyclic aromatic hydrocarbons. The particulate phase has many different types that can be classified by size or composition. The sizes of diesel particulates of greatest health concern are fine and ultrafine particles. These particles may be composed of elemental carbon with adsorbed compounds such as organics, sulfates, nitrates, metals, and other trace elements. Diesel exhaust is emitted from a broad range of on- and off-road diesel engines. As the Project would accommodate daily visits from heavy-duty diesel trucks during operations, an analysis of DPM was performed using the USEPA-approved AERMOD model.

The significance thresholds for TAC exposure requires an evaluation of non-cancer risk stated in terms of a hazard index. Non-cancer chronic impacts are calculated by dividing the annual average concentration by the REL for that substance. The potential for acute non-cancer hazards is evaluated by comparing the maximum short-term exposure level to an acute REL. RELs are designed to protect sensitive individuals within the population. The calculation of acute non-cancer impacts is similar to the procedure for chronic non-cancer impacts. An acute or chronic hazard index of 1.0 is considered individually significant. The hazard index is calculated by dividing the acute or chronic exposure by the reference exposure level.

Vehicle DPM emissions were estimated using emission factors for course particulate matter less than 10 microns in diameter (PM_{10}) generated with the 2017 version of the EMission FACtor model (EMFAC) developed by CARB. EMFAC 2017 is a mathematical model that was developed to calculate emission rates from motor vehicles that operate on highways, freeways, and local roads in California and is commonly used by CARB to project changes in future emissions from on-road mobile sources. The most recent version of this model, EMFAC 2017, incorporates regional motor vehicle data, information and estimates regarding the distribution of vehicle miles traveled by speed, and number of starts per day. The most important improvement in EMFAC 2017 is the integration of the new data and methods to estimate emissions from diesel trucks and buses. The model includes the emissions benefits of the truck and bus rule and the previously adopted rules for other on-road diesel equipment.

For this Project, annual average PM_{10} emission factors were generated by running EMFAC 2017 for vehicles in the Basin within Los Angeles County.[1] EMFAC generates emission factors in terms of grams of pollutant emitted per vehicle activity and can calculate a matrix of emission factors at specific values of vehicle speed, temperature, and relative humidity. The model was run for speeds traveled on and within the vicinity of the Project site.

Emissions from the following sources of TACs were analyzed and are shown in Table 2:

- Truck on-site mobile emissions
- Truck on-site idling emissions
- Truck off-site mobile emissions

[1] With the exception of idling emission rates, which were provided from Tables 3.2-41 and 43 of the *EMFAC2014 Volume III - Technical Documentation Guidebook* (for the sake of a conservative analysis, as this guidebook uses emission factors that were established prior to the most recent improvements in fuel efficiency in California and the United States as a whole, such as the Pavley standards.

TABLE 2: EMISSION SOURCE ASSUMPTIONS

Source Type / Emission	Configuration	Assumptions
On-site Mobile Diesel Truck Circulation (DPM) *Modeled as line-volume sources* Configuration = Separated 2W	Plume height = 30 ft Plume width = 30 ft Length = based on path of travel Surface-Based/Elevated = Surface-based	• On-site travel of 580 trucks trips per day; 290 trucks visiting the site per day (Ganddini, 2020). • Traveling distance based on proposed site plan layout. • PM_{10} mobile emissions factor provided by EMFAC 2017 (EMFAC 2014 Parameters: Los Angeles County, Annual, 5 mph, Emission Factor for T7 Heavy-Heavy Duty Diesel trucks)
On-site Diesel Truck Idling (DPM) *Modeled as volume sources* Release Height = 6.0 ft	• On-site Idle of 290 trucks per day (Ganddini, 2020).	• 15 minutes idling per vehicle • Emissions Factors based on EMFAC 2014 Technical Documentation Guidebook average of summer and winter high idle emissions rates
Off-site Mobile Diesel Truck Travel (DPM) *Modeled as line-volume sources* Configuration = Separated 2W	Plume height = 30 ft Plume width = 30 ft Length = based on path of travel Surface-Based/Elevated = Surface-based	• On-site travel of 580 trucks trips per day; 290 trucks visiting the site per day (Ganddini, 2020); broken down based on trip distribution provided by the Project Traffic Impact Analysis (Ganddini, 2020). • Traveling distance based on proposed site plan layout. • PM_{10} mobile emissions factor provided by EMFAC 2017 (EMFAC 2017 Parameters: Los Angeles County, Annual, 35 mph, Emission Factor for T7 Heavy-Heavy Duty Diesel trucks)

DAILY TRUCK TRIPS

The total diesel truck trips generated by the proposed Project is based on a Traffic Impact Analysis for the proposed Project prepared by Ganddini (2020). A highly conservative estimate of 580 truck trips per day was used, which is based on the 'light industrial' land use provided by the Institute of Transportation Engineers (ITE) Trip Generation Manual (10th Edition, 2017).

EMISSION RATES

Table 3 provides emission factors and the resultant emissions. For calculations, data outputs, and reference documents please see Appendices 1 and 2 of this HRA.

TABLE 3: EMISSION RATES BY SOURCE

Source	Pollutant	Volume/Size	Emission Factor	Emissions (lbs/yr)
On-site Diesel Truck (Mobile) Circulation	Diesel Particulate Matter (DPM)	290 trucks per day traveling 0.4 miles	0.012450207 g/mile	1.162147235
On-site Diesel Truck Idling	Diesel Particulate Matter (DPM)	290 trucks per day idling 15 minutes	0.0035 g/hr -vehicle	0.204189149
Off-site Diesel Truck (Mobile) Travel	Diesel Particulate Matter (DPM)	290 trucks per day, distributed based on the trip distribution as provided within the Traffic Study	0.009284707 g/mile	2.816671267

SOURCES: EMFAC 2014 (ON-SITE DIESEL TRUCK CIRCULATION); TABLES 3.2-41 AND 42, OF THE EMFAC2014 VOLUME III - TECHNICAL DOCUMENTATION GUIDEBOOK ON IDLING EMISSIONS; EMFAC 2017 WEB DATABASE (V.1.0.2); GANDDINI, 2020. SEE TABLE 2 OF THIS DOCUMENT AND APPENDIX 1 FOR FURTHER DETAIL.
NOTES: LBS = POUNDS; YR = YEAR; G = GRAMS; HP = HORSEPOWER

EXPOSURE ASSESSMENT

Exposure assessment involves translating the emission rate (e.g., lbs/hr, g/hr) of individual toxic air contaminants into the concentration (e.g., grams/cubic meter g /sec m^2 or parts per million) of each toxic air contaminant. The key step in performing an exposure assessment is the application of an air dispersion model. The dispersion model incorporates the local meteorological data (wind speed, wind direction, local temperature, inversions, etc.), stack height, exhaust flow characteristics, and other features such as terrain and building downwash into the dispersion of individual air contaminant. The Lakes Environmental AERMOD Version 9.9.0 (AERMOD Version 19191) dispersion model was employed for this assessment.

AERMOD is a steady-state, multiple-source, Gaussian dispersion model designed for use with emission sources situated in terrain where ground elevations can exceed the stack heights of the emission sources (not a factor in this case). AERMOD requires hourly meteorological data consisting of wind vector, wind speed, temperature, stability class, and mixing height. Surface and upper air meteorological data provided by the SCAQMD for Azusa Meteorological Station was selected as being the most representative meteorology based on proximity to the Project site as well as being within the same SCAQMD source receptor area (SRA). The SCAQMD divides the Basin into 38 SRAs to forecast and report air quality. Both the Project site and the Azusa Meteorological Station are located in SCAQMD SRA 9, known as the East San Gabriel Valley.

Emissions sources in the model include two area sources to represent the loading docks located at sixteen different locations on the Project site. Additionally, emissions sources in the model include a volume line source (comprised of 61 volume sources) representing the onsite truck circulation at the Project site. Further, there are three volume line sources representing off-site truck circulation into and out of the project site (and travelling along neighboring roadways). One

volume line source (comprised of 60 volume sources) represents the offsite truck circulation extending approximately 0.7 miles to the south of the Project site along Vincent Avenue; another volume line source (comprised of 70 volume sources) represents offsite truck circulation extending approximately 0.8 mile west of the Project site along Arrow Highway; and the third offsite volume line source (comprised of 45 volume sources) represents offsite truck circulation extending approximately 0.5 miles to the north of the Project site along Vincent Avenue. The separated line 2W volume source was employed consistent with the recommendations of the California Air Pollution Control Officers Association (CAPCOA) Health Risk Assessments for Proposed Land Use Projects (2009) document (page 54), which provides guidance for modeling roads/line sources in AERMOD. This guidance is necessary since AERMOD does not have a pollutant source option directly specific to mobile sources. According to CAPCOA, the best method for modeling emissions from travelling truck vehicles in AERMOD is to use a series of multiple volume sources. 2W volume sources involves a series of volume sources to approximate a line source. Using the width of the road as the length of the side of a single volume source, the number of volume sources along the length of the road is determined by dividing the length of the road by 2W. The number of volume sources is then determined in order to replicate a mobile source of pollutants traveling a roadway within the AERMOD software. This methodology is consistent with the USEPA AERMOD User's Guide. AERMOD can be used to predict the concentrations of pollutants emitted from vehicles on roads.

Regulatory Defaults: AERMOD was executed with the U.S. EPA regulatory default option, which is required by SCAQMD.

Urban Dispersion Option: AERMOD was executed using the urban modeling option, which is SCAQMD policy for all air quality impact analyses in its jurisdiction. All sources were modeled with urban effects using the population of Los Angeles County (population: 9,818,605).

Building Downwash: The Project site building and neighboring commercial buildings were included in AERMOD. However, BPIP/BPIP-Prime could not be modeled for the proposed Project, since there are no point/flair sources as part of the Project.

Modeling Receptor Grid: A rectangular (x-y) coordinate system was used. A region located within 500 meters of the Project site boundaries was used with receptor spacing of 50 meters. A grid of receptors at 75 meters apart were also placed around the Project site (i.e. fenceline) boundary. Additional receptors were added at all of the nearest sensitive receptors surrounding the Project site. Additional sensitive receptors were placed along nearby roadways and in-between receptors, to allow for analysis throughout the modelling extent and to allow for a visual representation of dispersion contours. Receptors were added in accordance with the scope and size of the Project site.

Meteorological Data: Five years of meteorological data was used in the exposure assessment. The meteorological ("Met) data (wind speed, wind direction, temperature, etc.) were recorded at the SCAQMD's Azusa location, for the period January 1, 2012 to December 31, 2016. This location was chosen because it was the closest meteorological site to the Project site, and because weather characteristics in Irwindale were determined to be similar at this location. Overall wind patterns

are based on the five years of hourly wind data. Winds are predominant from the west. Calm winds occur only 0.17% of the time (See Appendix 2 for wind rose).

Terrain: The AERMAP terrain data pre-processor was used to generate terrain data from the United States Geological Survey (USGS). The National Elevation Dataset (NED) data in GeoTIFF format was used to develop terrain data.

RISK ASSESSMENT

Once the emissions rates of individual air contaminants has been calculated, and an air dispersion model has been run through AERMOD, the next step in determining health risks is to determine the cancer risk, and acute and chronic incident rates. The Hotspots Analysis and Reporting Program (HARP) is a software suite used to assist with the programmatic requirements of the Air Toxics "Hot Spots" Program [Assembly Bill (AB) 2588]. HARP combines the tools needed to implement the requirements of AB 2588, such as reporting a facilities emissions inventory, determining a facilities prioritization score, conducting air dispersion modeling, and performing a facility health risk assessment. This study utilized the HARP2 Air Dispersion and Risk Tool with dispersion plot files created in AERMOD. Period and 1-hour dispersion files we used in combination with HARP-2 risk modelling software to calculate risk scenarios for residential, and workplace cancer rates, as well as acute and chronic incidences. After the risk assessment was complete HARP-2, plot files were then imported back into AREMOD for spatial and visual representation, and analysis of impact areas.

The Intake Rate Percentile sets the intake rate at which a person is exposed to the air pollutant. This study utilized the '95th Percentile (High End)' intake rate percentile to assess risk each scenario, to provide a conservative estimate of Project health risks. Additionally, the 'SCAQMD mandatory minimum pathways' were selected for pathways to evaluate.

RISK ASSESSMENT RESULTS

The results of the risk analysis indicate that cancer risks vary depending on the exposure scenario (residential or worker) and on location. In general, locations nearest the Project site have the greatest exposure and the associated risks are considerably lower as distance from the Project site increases. Table 4 displays the residential and workplace cancer risk, and acute and chronic

incidence rate results at nearest receptors. Figures 1 through 3 display a spatial representation of the associated risk by selected risk scenarios.

TABLE 4: SUMMARY OF MAXIMUM HEALTH RISKS

Risk Metric	Maximum Risk (per million persons)	Significance Threshold	Is Threshold Exceeded?
Residential Cancer Risk (0-year exposure)[1]	3.73	10 per million	No
Workplace Cancer Risk (25-year exposure)[2]	0.26	10 per million	No
Chronic (non-cancer)	<0.01	Hazard Index ≥1	No
Acute (non-cancer)[3]	0	Hazard Index ≥1	No

SOURCES: AERMOD 9.9.0 (V.19191) (LAKES ENVIRONMENTAL SOFTWARE, 2020); AND HARP-2 AIR DISPERSION AND RISK TOOL NOTES: [1]THE MAXIMUM RESIDENTIAL CANCER RISK WOULD BE FOR A RESIDENCE LOCATED APPROXIMATELY 75 FEET TO THE EAST OF THE PROJECT SITE. THE INCREMENTAL RESIDENTIAL CANCER RISK (30-YEAR EXPOSURE) AT THIS LOCATION IS AS PROVIDED WITHIN THIS TABLE.[2]THE VALUE PROVIDED FOR MAXIMUM WORKPLACE CANCER RISK IS THE MAXIMUM VALUE PROVIDED AT THE NEAREST WORKPLACE LOCATION, LOCATED APPROXIMATELY 5 FEET TO THE NORTH OF THE PROJECT SITE. [3]ACUTE (NON-CANCER) RISKS WERE NOT ESTIMATED, SINCE DPM DOES NOT HAVE SHORT-TERM TOXICITY VALUES.

The primary sources of TAC emissions from the Project result from the on-site and off-site truck travel. Idling of the trucks on-site generated the least emissions.

Variation of risk at all locations for residential cancer risk is shown in Figure 1. It should be noted that the nearest residential receptor, located at approximately 75 feet east of the Project site (east of Vincent Avenue and north of East Chadmont Street), would experience the highest maximum 30-year cancer risk (approximately 3.73 per million). Overall, the results show that residential 30-year cancer risk would remain below 10 in a million at areas near the Project site that contain residential receptors. Furthermore, it is very unlikely any individual would remain at the same location for 30 years; therefore, this result represents a conservative estimate.

Variation of risk at all locations for workplace cancer is shown in Figure 2. Overall, the results show that 25-year workplace cancer risk using the '95th Percentile" method would remain below 10 in a million threshold. The nearest workplace receptor is located just to the north of the Project site, which would experience a workplace cancer risk of 0.26 in a million. This maximum risk level represents the worst-case scenario for 25-year workplace cancer risk.

Variation of risk at all locations for chronic exposure to DPM is shown in Figure 3. Chronic or long-term exposure DPM can result is non-cancer health effects. Chronic non-cancer hazard results show that chronic risk on and near the Project site would remain below the hazard index of ≥1, with a maximum value of approximately less than 0.01. Acute non-cancer health effects were not provided by the modeling, since DPM does not have short-term toxicity values.

FIGURE-1: PROJECT-GENERATED MAXIMUM RESIDENTIAL CANCER RISK PER MILLION PERSONS (30-YEAR) – 95TH PERCENTILE METHOD

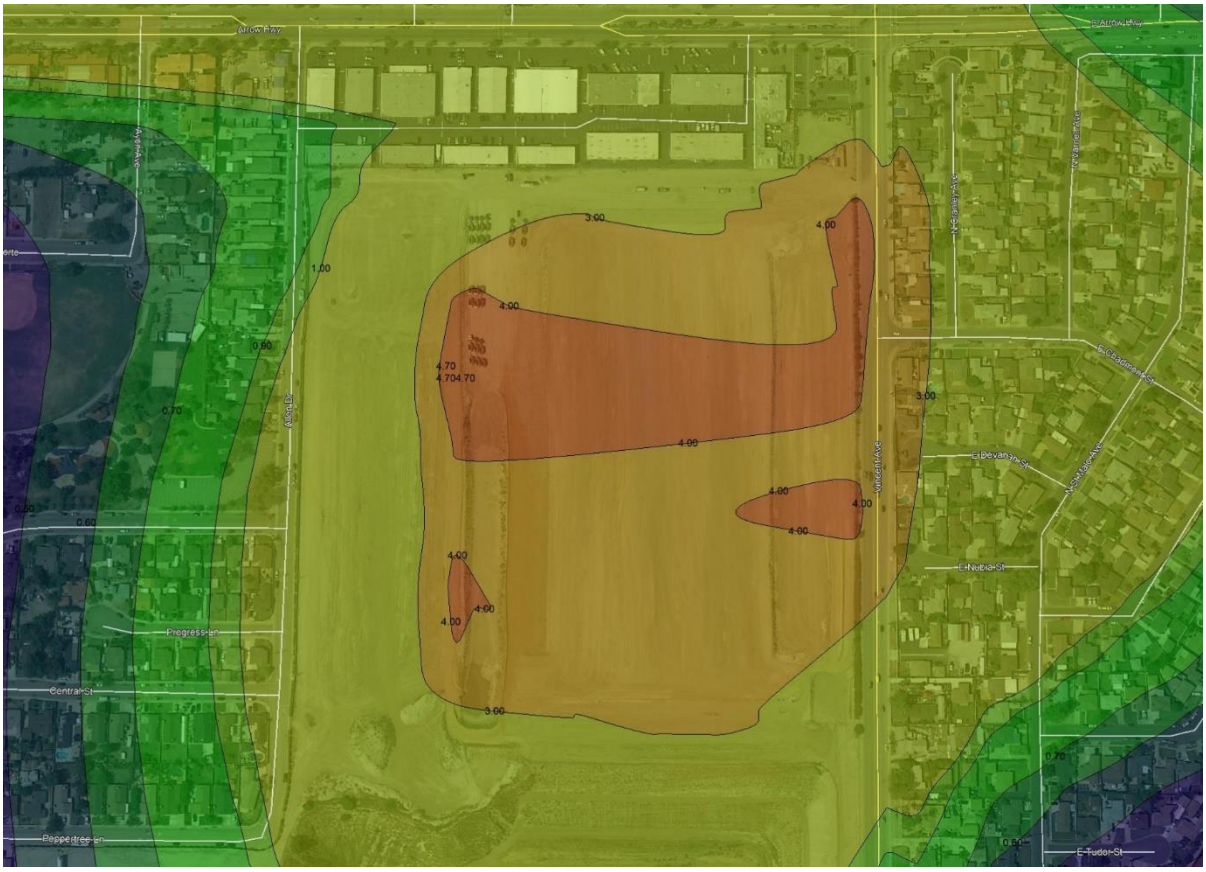

Sources: Prepared by De Novo Planning Group (2020); Lakes Environmental AERMOD View (v. 19191); HARP-2 Air Dispersion and Risk Tool (dated 19121); Google Earth.

FIGURE-2: PROJECT-GENERATED MAXIMUM WORKPLACE CANCER RISK (25-YEAR) - 95TH PERCENTILE METHOD

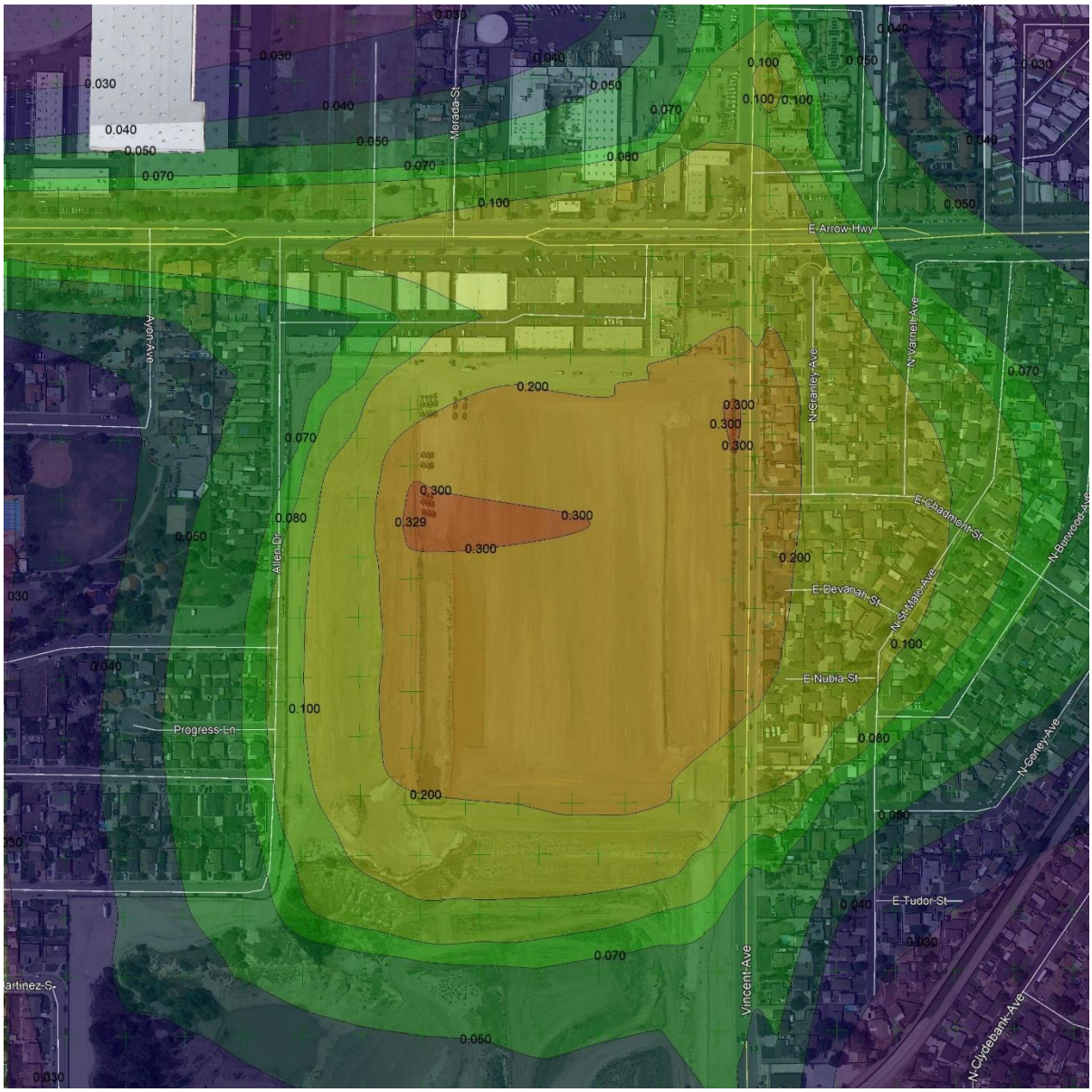

Sources: Prepared by De Novo Planning Group (2020); Lakes Environmental AERMOD View (v. 19191); HARP-2 Air Dispersion and Risk Tool (dated 19121); Google Earth.

FIGURE-3: PROJECT-GENERATED CHRONIC MAXIMUM RISK (LONG-TERM EXPOSURE; HAZARD INDEX)

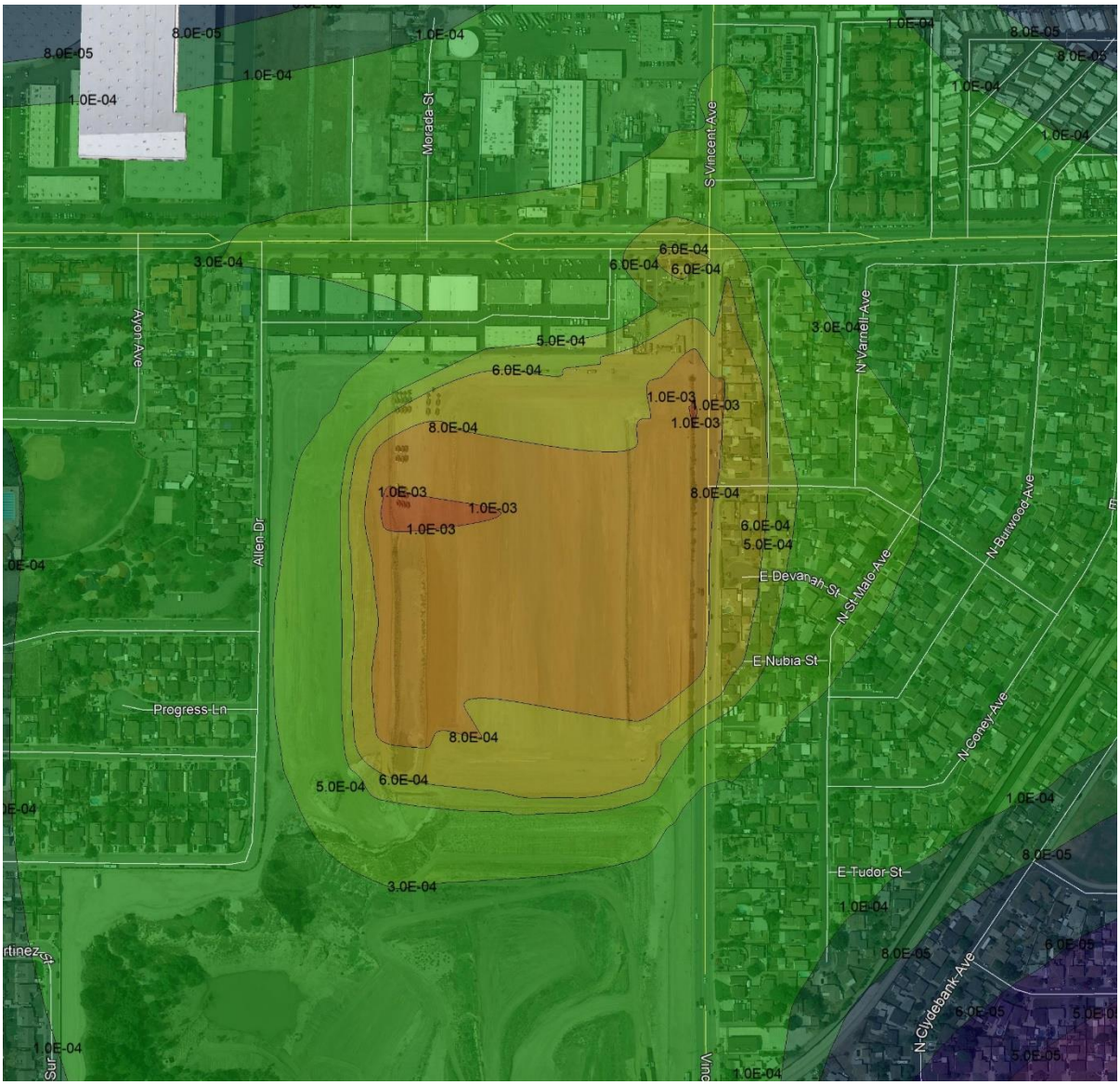

Sources: Prepared by De Novo Planning Group (2020); Lakes Environmental AERMOD View (v. 19191); HARP-2 Air Dispersion and Risk Tool (dated 19121); Google Earth.

CUMULATIVE RISKS

It is worth noting that the SCAQMD has conducted an in-depth analysis of TACs and their resulting health risks for all of Southern California. This study, the Multiple Air Toxics Exposure Study in the South Coast Air Basin, MATES IV," shows that cancer risk has decreased more than 50 percent between MATES III (2008) and MATES IV (2015).

MATES-IV is the most comprehensive dataset documenting the ambient air toxic levels and health risks associated with the Basin emissions. Therefore, MATES-IV study represents the baseline health risk for a cumulative analysis. MATES-IV estimates the average excess cancer risk level from exposure to TACs is less than 400 in one million basin-wide. These model estimates were based on monitoring data collected at 10 fixed sites within the Basin. None of the fixed monitoring sites are within the local area of the Project site. However, MATES-IV has extrapolated the excess cancer risk levels throughout the basin by modeling the specific grids. According to the latest online MATES-IV Carcinogenic Risk Interactive Map, MATES-IV modeling predicted an excess cancer risk of 1,067.39 in one million for the grid that contains the Project site. DPM is included in this cancer risk along with all other TAC sources. DPM accounts for 68 percent of the total risk shown in MATES-IV. The proposed Project would incrementally increase this risk to those living and working in the immediate vicinity of the proposed Project, as well as those in the surrounding environs, up to the maximum risks as disclosed in Table 4 (previous).

REPORT PREPARERS

This document was prepared by De Novo Planning Group, Inc. of El Dorado Hills under the direction of the City of Irwindale. De Novo Planning Group staff participating in document preparation included the following:

- Steve McMurtry, Principal Planner (916-580-9818)
- Josh Smith, Associate Planner (916-805-1281)
- William Crenshaw, Associate Planner (916-235-0116)

REFERENCES

CAPCOA. 2009. *Health Risk Assessments for Proposed Land Use Projects*.

CARB. 2000. *Risk Reduction Plan to Reduce Particulate Matter Emissions from Diesel-Fueled Engines and Vehicles*.

CARB 2015. HARP, and AERMOD Course 296 *User's Guide for Health Risk Assessment and Dispersion Modeling.*

CARB 2014. EMFAC. Emission Rates tables 3.2-41 and 42, of the EMFAC2014 *Volume III - Technical Documentation Guidebook:* http://www.arb.ca.gov/msei/downloads/emfac2014/emfac2014-vol3-technical-documentation-052015.pdf

CARB. 2020. EMFAC Web Database PM10 Mobile Emissions Factors (Los Angeles County, 5 MPH and 35 MPH, emission rates for Heavy-Heavy Duty Diesel CA International Registration Plan Trucks)

CARB. 2020. Hotspots Analysis and Reporting Program (HARP). Air Dispersion and Modeling and Risk Tool. Model last updated May 1, 2019.

Available: https://www.arb.ca.gov/toxics/harp/harp.htm

California Environmental Protection Agency (2011) Air Resources Board (ARB) Stationary Source Division Emissions Assessment Branch. 2011. *Guidelines for In-Use Diesel-Fueled Transport Refrigeration Units (TRU) and TRU Generator Sets, and Facilities Where TRUs Operate*. Updated January 2011.

Ganddini. 2020. Vincent Avenue Industrial Building Traffic Impact Analysis.

Lakes Environmental Software. 2020. AERMOD Version 9.9.0 (v.19191). Available: https://www.weblakes.com/products/aermod/index.html

Michael Krause. 2018. South Coast Air Quality Management District. Personal communications, 8/8/2018.

Office of Environmental Health Hazard Assessment. 2015. Risk Assessment Guidelines. Guidance Manual for Preparation of Health Risk Assessments. February 2015. Available: https://oehha.ca.gov/media/downloads/crnr/2015guidancemanual.pdf

SCAQMD. 2008. Multiple Air Toxics Exposure Study in the South Coast Air Basin, MATES III. Available online at: https://www.aqmd.gov/home/air-quality/air-quality-studies/health-studies/mates-iii

SCAQMD. 2015. Multiple Air Toxics Exposure Study in the South Coast Air Basin, MATES IV. Final Report. May. Available: https://www.aqmd.gov/docs/default-source/air-quality/air-toxic-studies/mates-iv/mates-iv-final-draft-report-4-1-15.pdf?sfvrsn=7

SCAQMD. 2016. AERMOD Table 1. Meteorological Sites. Meteorological Stations & Years of Meteorological Data Available. Available: https://www.aqmd.gov/home/air-quality/air-quality-data-studies/meteorological-data/aermod-table-1

SCAQMD. 2019. SCAQMD Air Quality Significance Thresholds. Available: http://www.aqmd.gov/docs/default-source/ceqa/handbook/scaqmd-air-quality-significance-thresholds.pdf?sfvrsn=2

United States Environmental Protection Agency. 2019. AERMOD Implementation Guide. August 2019. Available:

This page left intentionally blank.

Appendix 1: Emissions Rates and Emission Calculations

EMFAC2017 (v1.0.2) Emission Rates
Region Type: Sub-Area
Region: Los Angeles (SC)
Calendar Year: 2023
Season: Annual
Vehicle Classification: EMFAC2011 Categories
Units: miles/day for VMT, g/mile for RUNEX, PMBW and PMTW. Note 'day' in the unit is operation day.

Region	Calendar Year	Vehicle Category	Model Year	Speed	Fuel	VMT	PM10_RUNEX
Los Angeles (SC)	2023	T7 CAIRP	Aggregated	5	DSL	1752.63	0.012450207
Los Angeles (SC)	2023	T7 CAIRP	Aggregated	10	DSL	5567.821	0.01094876
Los Angeles (SC)	2023	T7 CAIRP	Aggregated	15	DSL	15124.43	0.00867407
Los Angeles (SC)	2023	T7 CAIRP	Aggregated	20	DSL	42417.71	0.00737032
Los Angeles (SC)	2023	T7 CAIRP	Aggregated	25	DSL	88457.77	0.00703751
Los Angeles (SC)	2023	T7 CAIRP	Aggregated	30	DSL	119920.6	0.007675639
Los Angeles (SC)	2023	T7 CAIRP	Aggregated	35	DSL	91679.61	0.009284707
Los Angeles (SC)	2023	T7 CAIRP	Aggregated	40	DSL	90637.22	0.011864715
Los Angeles (SC)	2023	T7 CAIRP	Aggregated	45	DSL	87460.02	0.015415662
Los Angeles (SC)	2023	T7 CAIRP	Aggregated	50	DSL	90817.34	0.019937549
Los Angeles (SC)	2023	T7 CAIRP	Aggregated	55	DSL	110566.2	0.025430375
Los Angeles (SC)	2023	T7 CAIRP	Aggregated	60	DSL	188792.9	0.03189414
Los Angeles (SC)	2023	T7 CAIRP	Aggregated	65	DSL	152557.9	0.039328845
Los Angeles (SC)	2023	T7 CAIRP	Aggregated	70	DSL	105.3171	0.039328845
Los Angeles (SC)	2023	T7 CAIRP	Aggregated	75	DSL	0	0
Los Angeles (SC)	2023	T7 CAIRP	Aggregated	80	DSL	0	0
Los Angeles (SC)	2023	T7 CAIRP	Aggregated	85	DSL	0	0
Los Angeles (SC)	2023	T7 CAIRP	Aggregated	90	DSL	0	0

Derived Emission Factors (average of Heavy Duty Truck Fleet Mix - T7)

On-site Mobile (5 mph) (g/mile)	Off-site Mobile (35 mph) (g/mile)
0.012450207	0.009284707

Truck Idling Emission Rates

Idling Emission Rates taken from tables 3.2-41 and 42, of the EMFAC2014 Volume III - Technical Documentation Guidebook:
http://www.arb.ca.gov/msei/downloads/emfac2014/emfac2014-vol3-technical-documentation-052015.pdf

pounds per gram: 0.00220462

Idling Emissions:

Table 3.2-40: Revised HHD Diesel Truck Low Idle Emission Rates (after 2009)	PM10	**0.001**	g/hr-truck	
Table 3.2-41: High Idle Emissions Rates for Summer (2009 and later)	PM10	**0.003**	g/hr-truck	Note: the following calculation uses an average of the summer and
Table 3.2-42: High Idle Emissions Rates for Winter (2009 and later)	PM10	**0.004**	g/hr-truck	winter high idle emissions rates for the emission factor calcs.

0.000875	g/15 minutes-truck	Note: assuming 15 minutes of idling per truck (conservative estimate)
0.000875	g/day-truck	
24	hours in day	
290	# of trucks	Source: Ganddini Traffic Impact Analysis, 2020

Therefore:

0.25375	g/day-all trucks
92.61875	g/year-all trucks
0.204189149	lbs/year-all trucks

Therefore:

0.010572917	g/hr-all trucks
0.000176215	g/min-all trucks
2.93692E-06	g/sec-all trucks

82	Max Hour truck trips	Source: Ganddini Traffic Impact Analysis, 2020

0.07175	g/15 minutes-max hour vehicles
0.0001582	lbs/15 minutes-max hour vehicles

Annual Emissions:	**0.012761822**	lbs/year-all trucks for each of the	**16** idling points
Max Hr Emissions:	**0.00000989**	lbs/hour-all trucks for each of the	**16** idling points

Mobile Truck Emissions

pounds per gram: 0.00220462

Line Source Volume #1 (note: on-site):

Assumptions:	Factor:		Source:
1. Average distanced travelled on-site per truck (round-trip):	0.4	miles/truck	Based on Site Plan (conservative estimate)
2. # of trucks per day visiting the project site:	290	trucks/day	Source: Ganddini Traffic Impact Analysis, 2020
3. PM10 Mobile Emissions Factors (Los Angeles County, 5 MPH, HHDT):	0.012450207	g/mile	EMFAC2017 (Year 2023 Heavy Duty Truck Fleet Mix)

Therefore:

Total daily PM10 On-site Mobile Emissions Generated by the project:

1.444223961	**g/day-all vehicles**
0.003183965	lbs/day-all vehicles
1.162147235	**lbs/year-all vehicles**

Max Hr Emissions

82.00 Peak hour truck trips Source: Ganddini Traffic Study, 2020

0.2 miles/truck trip (each truck trip travels one half of the distance of the round-trip distance)

0.204183388	**g/day-max hour vehicles**
0.000450147	lbs/day-max hour vehicles
0.000018756	**lbs/hour-max hour vehicles**

Line Source Volume #2 (note: off-site - south):

Assumptions:	Factor:		Source:
1. Distanced travelled off-site per truck trip along this line (one-way):	0.7	miles/truck trip	As measured by Google Maps
2. # of trucks trips per day following this line source (15% of total truck trips):	87	trucks trips/day	Source: Ganddini Traffic Impact Analysis, 2020
3. PM10 Mobile Emissions Factors (Los Angeles County, 35 MPH, HHDT):	0.009284707	g/mile	EMFAC2017 (Year 2023 Heavy Duty Truck Fleet Mix)

Therefore:

Total daily PM10 On-site Mobile Emissions Generated this line source:

0.56543866	**g/day-all vehicles**
0.001246577	lbs/day-all vehicles
0.455000743	**lbs/year-all vehicles**

Max Hr Emissions

82 Peak hour truck trips (Source: Kuntzman Associates, Inc., 2018)

0.532942185	**g/day-max hour vehicles**
0.001174935	lbs/day-max hour vehicles
0.000048956	**lbs/hour-max hour vehicles**

Line Source Volume #3 (note: off-site - west):

Assumptions:	Factor:		Source:
1. Distanced travelled off-site per truck trip along this line (one-way):	0.8	miles/truck trip	As measured by Google Maps
2. # of trucks trips per day following this line source (40% of total):	232	trucks trips/day	Source: Ganddini Traffic Impact Analysis, 2020
3. PM10 Mobile Emissions Factors (Los Angeles County, 35 MPH, HHDT):	0.009284707	g/mile	EMFAC2017 (Year 2023 Heavy Duty Truck Fleet Mix)

Therefore:

Total daily PM10 On-site Mobile Emissions Generated this line source:

1.72324163	**g/day-all vehicles**
0.003799093	lbs/day-all vehicles
1.386668932	**lbs/year-all vehicles**

Max Hr Emissions

82 Peak hour truck trips (Source: Kuntzman Associates, Inc., 2018)

0.609076783	**g/day-max hour vehicles**
0.001342783	lbs/day-max hour vehicles
0.000055949	**lbs/hour-max hour vehicles**

Line Source Volume #4 (note: off-site - north):

Assumptions:	Factor:		Source:
1. Distanced travelled off-site per truck trip along this line (one-way):	0.5	miles/truck trip	As measured by Google Maps
2. # of trucks trips per day following this line source (45% of total):	261	trucks trips/day	Source: Ganddini Traffic Impact Analysis, 2020
3. PM10 Mobile Emissions Factors (Los Angeles County, 35 MPH, HHDT):	0.009284707	g/mile	EMFAC2017 (Year 2023 Heavy Duty Truck Fleet Mix)

Therefore:

Total daily PM10 On-site Mobile Emissions Generated this line source:

1.211654271	**g/day-all vehicles**
0.002671237	lbs/day-all vehicles
0.975001592	**lbs/year-all vehicles**

Max Hr Emissions

82 Peak hour truck trips (Source: Kuntzman Associates, Inc., 2018)

0.380672989	**g/day-max hour vehicles**
0.000839239	lbs/day-max hour vehicles
0.000034968	**lbs/hour-max hour vehicles**

Appendix 2: Wind Rose

WIND ROSE PLOT:

Station #3179

DISPLAY:

Wind Speed
Direction (blowing from)

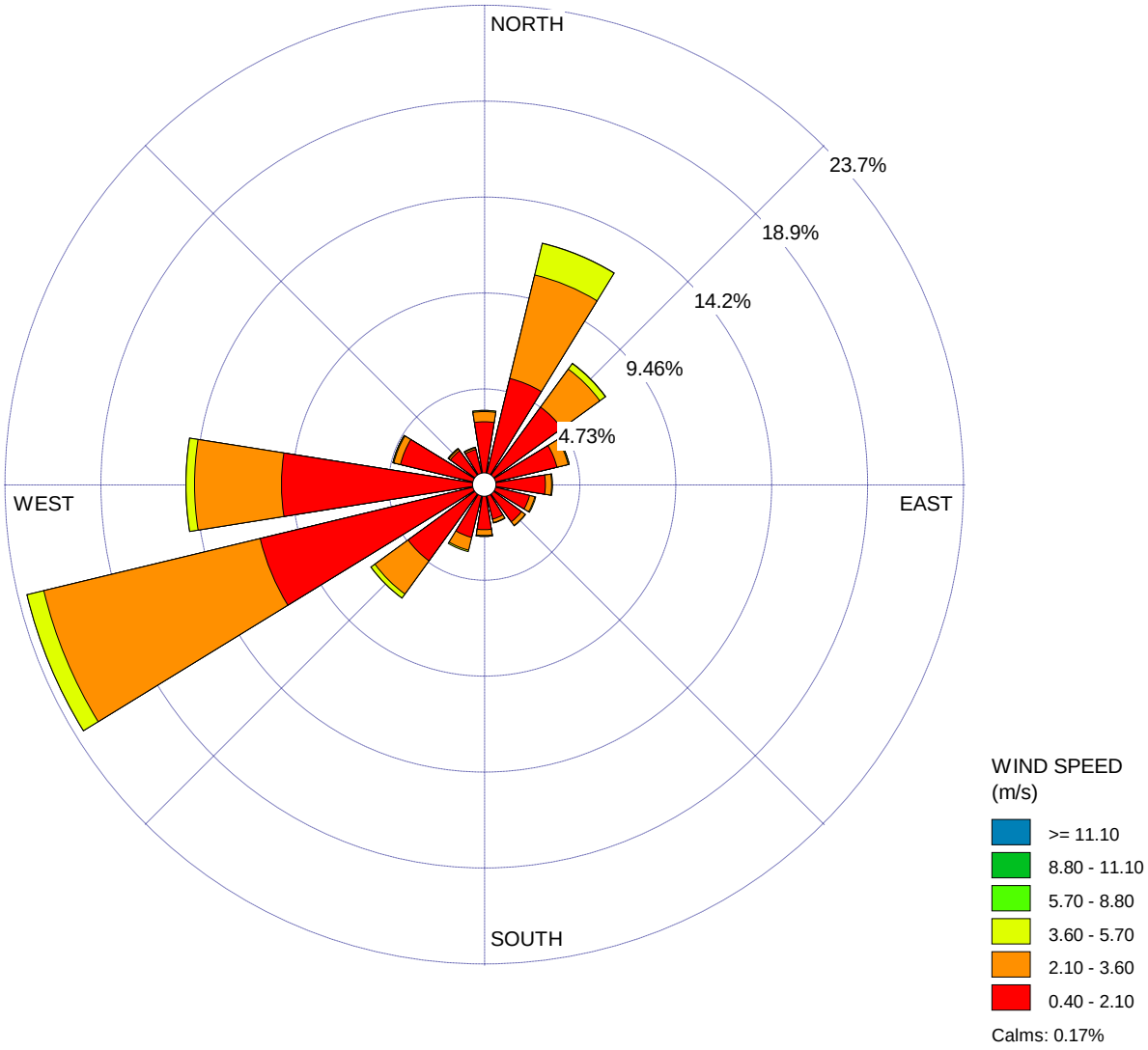

COMMENTS:	DATA PERIOD: **Start Date: 1/1/2012 - 00:00** **End Date: 12/31/2016 - 23:59**	COMPANY NAME: **South Coast Air Quality Management District**	
		MODELER: **Melissa Sheffer**	
	CALM WINDS: **0.17%**	TOTAL COUNT: **42845 hrs.**	
	AVG. WIND SPEED: **1.70 m/s**	DATE: **5/25/2017**	PROJECT NO.:

Appendix C

Noise Data

Environmental Noise Assessment

5175 Vincent Avenue

City of Irwindale, California

June 11, 2020

Project # 200107

Prepared for:

De Novo Planning Group
180 E. Main Street, Suite 108
Tustin, CA 92780

Prepared by:

Saxelby Acoustics LLC

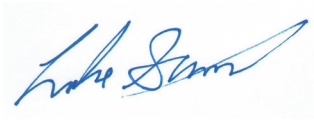



Luke Saxelby, INCE Bd. Cert.
Principal Consultant
Board Certified, Institute of Noise Control Engineering (INCE)

(916) 760-8821
www.SaxNoise.com | Luke@SaxNoise.com
915 Highland Pointe Drive, Suite 250
Roseville, CA 95678

Appendix A: Acoustical Terminology

Acoustics	The science of sound.
Ambient Noise	The distinctive acoustical characteristics of a given space consisting of all noise sources audible at that location. In many cases, the term ambient is used to describe an existing or pre-project condition such as the setting in an environmental noise study.
ASTC	Apparent Sound Transmission Class. Similar to STC but includes sound from flanking paths and correct for room reverberation. A larger number means more attenuation. The scale, like the decibel scale for sound, is logarithmic.
Attenuation	The reduction of an acoustic signal.
A-Weighting	A frequency-response adjustment of a sound level meter that conditions the output signal to approximate human response.
Decibel or dB	Fundamental unit of sound, A Bell is defined as the logarithm of the ratio of the sound pressure squared over the reference pressure squared. A Decibel is one-tenth of a Bell.
CNEL	Community Noise Equivalent Level. Defined as the 24-hour average noise level with noise occurring during evening hours (7 - 10 p.m.) weighted by +5 dBA and nighttime hours weighted by +10 dBA.
DNL	See definition of Ldn.
IIC	Impact Insulation Class. An integer-number rating of how well a building floor attenuates impact sounds, such as footsteps. A larger number means more attenuation. The scale, like the decibel scale for sound, is logarithmic.
Frequency	The measure of the rapidity of alterations of a periodic signal, expressed in cycles per second or hertz (Hz).
Ldn	Day/Night Average Sound Level. Similar to CNEL but with no evening weighting.
Leq	Equivalent or energy-averaged sound level.
Lmax	The highest root-mean-square (RMS) sound level measured over a given period of time.
L(n)	The sound level exceeded a described percentile over a measurement period. For instance, an hourly L50 is the sound level exceeded 50% of the time during the one-hour period.
Loudness	A subjective term for the sensation of the magnitude of sound.
NIC	Noise Isolation Class. A rating of the noise reduction between two spaces. Similar to STC but includes sound from flanking paths and no correction for room reverberation.
NNIC	Normalized Noise Isolation Class. Similar to NIC but includes a correction for room reverberation.
Noise	Unwanted sound.
NRC	Noise Reduction Coefficient. NRC is a single-number rating of the sound-absorption of a material equal to the arithmetic mean of the sound-absorption coefficients in the 250, 500, 1000, and 2,000 Hz octave frequency bands rounded to the nearest multiple of 0.05. It is a representation of the amount of sound energy absorbed upon striking a particular surface. An NRC of 0 indicates perfect reflection; an NRC of 1 indicates perfect absorption.
RT60	The time it takes reverberant sound to decay by 60 dB once the source has been removed.
Sabin	The unit of sound absorption. One square foot of material absorbing 100% of incident sound has an absorption of 1 Sabin.
SEL	Sound Exposure Level. SEL is a rating, in decibels, of a discrete event, such as an aircraft flyover or train pass by, that compresses the total sound energy into a one-second event.
SPC	Speech Privacy Class. SPC is a method of rating speech privacy in buildings. It is designed to measure the degree of speech privacy provided by a closed room, indicating the degree to which conversations occurring within are kept private from listeners outside the room.
STC	Sound Transmission Class. STC is an integer rating of how well a building partition attenuates airborne sound. It is widely used to rate interior partitions, ceilings/floors, doors, windows and exterior wall configurations. The STC rating is typically used to rate the sound transmission of a specific building element when tested in laboratory conditions where flanking paths around the assembly don't exist. A larger number means more attenuation. The scale, like the decibel scale for sound, is logarithmic.
Threshold of Hearing	The lowest sound that can be perceived by the human auditory system, generally considered to be 0 dB for persons with perfect hearing.
Threshold of Pain	Approximately 120 dB above the threshold of hearing.
Impulsive	Sound of short duration, usually less than one second, with an abrupt onset and rapid decay.
Simple Tone	Any sound which can be judged as audible as a single pitch or set of single pitches.

SAXELBY ACOUSTICS
Acoustics • Noise • Vibration

Appendix B: Continuous and Short-Term Ambient Noise Measurement Results



Appendix B1: Continuous Noise Monitoring Results

Site: LT-1
Project: 5175 Vincent Ave. Irwindale
Meter: LDL 812-1
Location: Northeastern Project Boundary
Calibrator: CAL200
Coordinates: 34.1058500°, -117.9255560°

Date	Time	Measured Level, dBA			
		L_{eq}	L_{max}	L_{50}	L_{90}
Tuesday, February 11, 2020	16:00	71.9	92.7	68.8	59.3
Tuesday, February 11, 2020	17:00	73.0	96.8	68.9	59.3
Tuesday, February 11, 2020	18:00	70.5	84.0	68.0	60.1
Tuesday, February 11, 2020	19:00	69.0	83.9	65.9	57.6
Tuesday, February 11, 2020	20:00	69.9	95.4	64.5	55.5
Tuesday, February 11, 2020	21:00	69.8	99.0	62.0	53.9
Tuesday, February 11, 2020	22:00	65.8	86.6	59.5	52.0
Tuesday, February 11, 2020	23:00	65.9	87.0	56.5	51.3
Wednesday, February 12, 2020	0:00	63.3	87.3	53.3	48.1
Wednesday, February 12, 2020	1:00	60.2	81.4	50.5	46.6
Wednesday, February 12, 2020	2:00	60.2	79.8	50.0	46.8
Wednesday, February 12, 2020	3:00	63.5	87.9	53.7	47.9
Wednesday, February 12, 2020	4:00	66.3	84.7	60.1	53.0
Wednesday, February 12, 2020	5:00	68.7	85.9	63.5	57.1
Wednesday, February 12, 2020	6:00	70.2	85.0	67.3	59.7
Wednesday, February 12, 2020	7:00	71.8	85.2	69.6	61.5
Wednesday, February 12, 2020	8:00	70.8	85.1	68.8	60.4
Wednesday, February 12, 2020	9:00	69.8	87.5	66.6	56.1
Wednesday, February 12, 2020	10:00	69.7	88.5	66.4	54.6
Wednesday, February 12, 2020	11:00	69.3	84.2	66.5	54.2
Wednesday, February 12, 2020	12:00	70.0	85.2	67.0	55.2
Wednesday, February 12, 2020	13:00	69.7	82.0	67.1	55.1
Wednesday, February 12, 2020	14:00	71.5	93.2	68.3	57.7
Wednesday, February 12, 2020	15:00	71.7	91.6	68.9	59.6

Statistics	Leq	Lmax	L50	L90
Day Average	70.7	88.9	67.2	57.3
Night Average	66.0	85.1	57.1	51.4
Day Low	69.0	82.0	62.0	53.9
Day High	73.0	99.0	69.6	61.5
Night Low	60.2	79.8	50.0	46.6
Night High	70.2	87.9	67.3	59.7
Ldn	73.5	Day %		83.0
CNEL	73.8	Night %		17.0

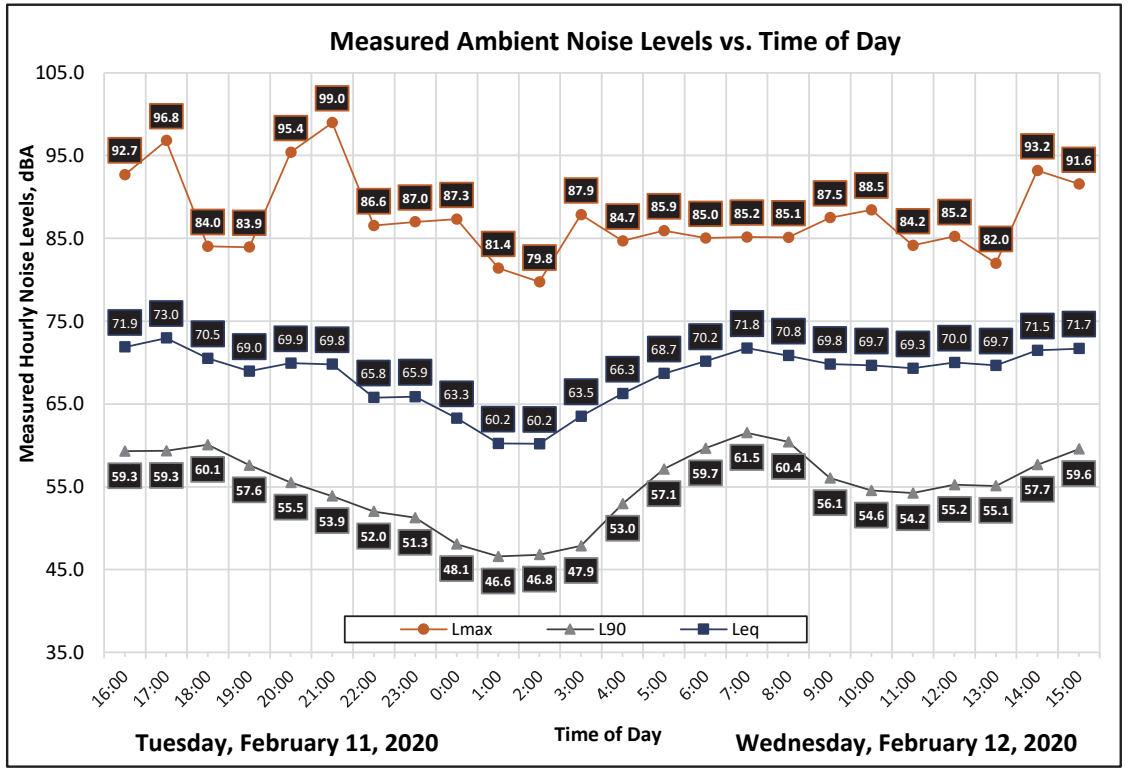



Appendix B2: Continuous Noise Monitoring Results

Site: LT-2
Project: 5175 Vincent Ave. Irwindale
Meter: LDL 820-2
Location: Southeastern Project Boundary
Calibrator: CAL200
Coordinates: 34.1033290°, -117.9255740°

Date	Time	Measured Level, dBA			
		L_{eq}	L_{max}	L_{50}	L_{90}
Tuesday, February 11, 2020	16:00	73.7	88.6	71.5	59.1
Tuesday, February 11, 2020	17:00	73.7	87.0	71.7	62.1
Tuesday, February 11, 2020	18:00	72.8	83.8	70.7	62.0
Tuesday, February 11, 2020	19:00	71.1	85.9	68.1	58.1
Tuesday, February 11, 2020	20:00	70.2	89.3	66.4	56.8
Tuesday, February 11, 2020	21:00	69.8	95.0	63.7	55.7
Tuesday, February 11, 2020	22:00	68.0	88.1	61.7	52.8
Tuesday, February 11, 2020	23:00	66.4	89.7	58.1	52.6
Wednesday, February 12, 2020	0:00	65.6	89.5	56.3	49.1
Wednesday, February 12, 2020	1:00	62.4	84.3	52.4	49.4
Wednesday, February 12, 2020	2:00	62.2	83.6	52.6	49.4
Wednesday, February 12, 2020	3:00	65.5	90.4	55.4	51.1
Wednesday, February 12, 2020	4:00	68.7	91.8	61.2	52.2
Wednesday, February 12, 2020	5:00	70.3	85.1	64.9	56.7
Wednesday, February 12, 2020	6:00	72.1	83.5	68.9	59.9
Wednesday, February 12, 2020	7:00	74.4	89.8	73.0	62.8
Wednesday, February 12, 2020	8:00	73.4	85.7	71.7	62.3
Wednesday, February 12, 2020	9:00	71.6	87.2	68.7	56.9
Wednesday, February 12, 2020	10:00	71.2	86.0	68.0	54.1
Wednesday, February 12, 2020	11:00	71.4	86.0	68.2	53.8
Wednesday, February 12, 2020	12:00	72.2	89.2	69.5	54.4
Wednesday, February 12, 2020	13:00	71.9	86.7	69.5	55.7
Wednesday, February 12, 2020	14:00	73.2	90.0	71.2	59.1
Wednesday, February 12, 2020	15:00	73.7	89.2	71.6	61.3

Statistics	Leq	Lmax	L50	L90
Day Average	72.5	88.0	69.6	58.3
Night Average	67.9	87.3	59.0	52.6
Day Low	69.8	83.8	63.7	53.8
Day High	74.4	95.0	73.0	62.8
Night Low	62.2	83.5	52.4	49.1
Night High	72.1	91.8	68.9	59.9
Ldn	75.3	Day %		82.7
CNEL	75.6	Night %		17.3

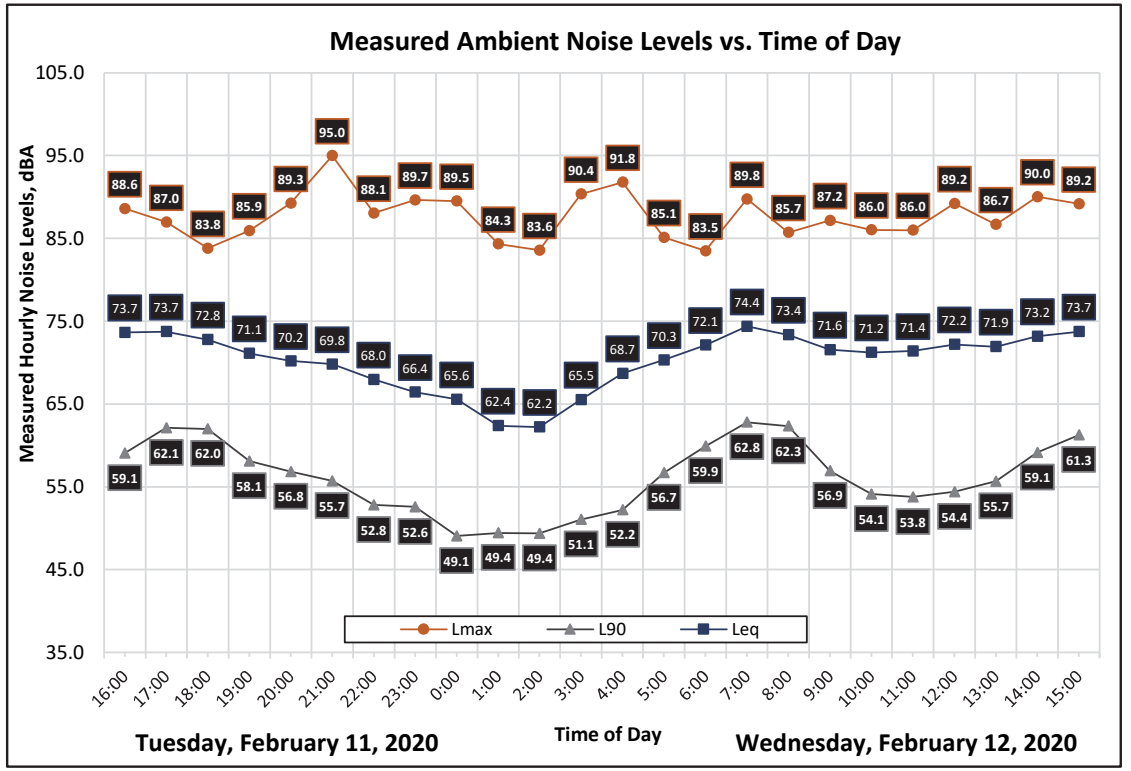



Appendix B3: Continuous Noise Monitoring Results

Site: LT-3
Project: 5175 Vincent Ave. Irwindale
Meter: LDL 820-1
Location: Southwestern Project Boundary
Calibrator: CAL200
Coordinates: 34.1060816°, -117.9295424°

Date	Time	Measured Level, dBA			
		L_{eq}	L_{max}	L_{50}	L_{90}
Tuesday, February 11, 2020	17:00	48.9	69.7	46.5	44.3
Tuesday, February 11, 2020	18:00	48.6	62.2	47.4	45.6
Tuesday, February 11, 2020	19:00	51.0	69.0	49.1	46.4
Tuesday, February 11, 2020	20:00	52.1	61.0	51.4	49.1
Tuesday, February 11, 2020	21:00	53.5	68.5	52.7	50.7
Tuesday, February 11, 2020	22:00	53.0	64.8	52.0	48.6
Tuesday, February 11, 2020	23:00	52.5	61.6	51.6	47.6
Tuesday, February 11, 2020	0:00	52.6	59.9	52.3	49.0
Wednesday, February 12, 2020	1:00	54.6	79.9	51.9	49.2
Wednesday, February 12, 2020	2:00	52.7	62.1	51.7	48.6
Wednesday, February 12, 2020	3:00	53.9	59.9	53.4	50.9
Wednesday, February 12, 2020	4:00	53.5	75.5	51.5	47.6
Wednesday, February 12, 2020	5:00	57.4	79.0	56.6	54.1
Wednesday, February 12, 2020	6:00	56.4	67.7	55.8	53.6
Wednesday, February 12, 2020	7:00	56.2	68.7	55.9	53.3
Wednesday, February 12, 2020	8:00	52.8	74.0	47.5	44.3
Wednesday, February 12, 2020	9:00	48.6	72.6	44.5	41.5
Wednesday, February 12, 2020	10:00	46.8	63.6	42.6	39.8
Wednesday, February 12, 2020	11:00	48.5	67.5	43.0	40.3
Wednesday, February 12, 2020	12:00	48.4	68.1	44.4	41.4
Wednesday, February 12, 2020	13:00	49.4	66.9	46.1	42.5
Wednesday, February 12, 2020	14:00	48.5	66.4	45.4	42.3
Wednesday, February 12, 2020	15:00	49.7	69.8	46.4	43.9
Wednesday, February 12, 2020	16:00	53.8	77.7	46.8	43.5

Statistics	Leq	Lmax	L50	L90
Day Average	51.3	68.4	47.3	44.6
Night Average	54.4	67.8	53.0	49.9
Day Low	46.8	61.0	42.6	39.8
Day High	56.2	77.7	55.9	53.3
Night Low	52.5	59.9	51.5	47.6
Night High	57.4	79.9	56.6	54.1
Ldn	60.5	Day %		44.9
CNEL	60.7	Night %		55.1

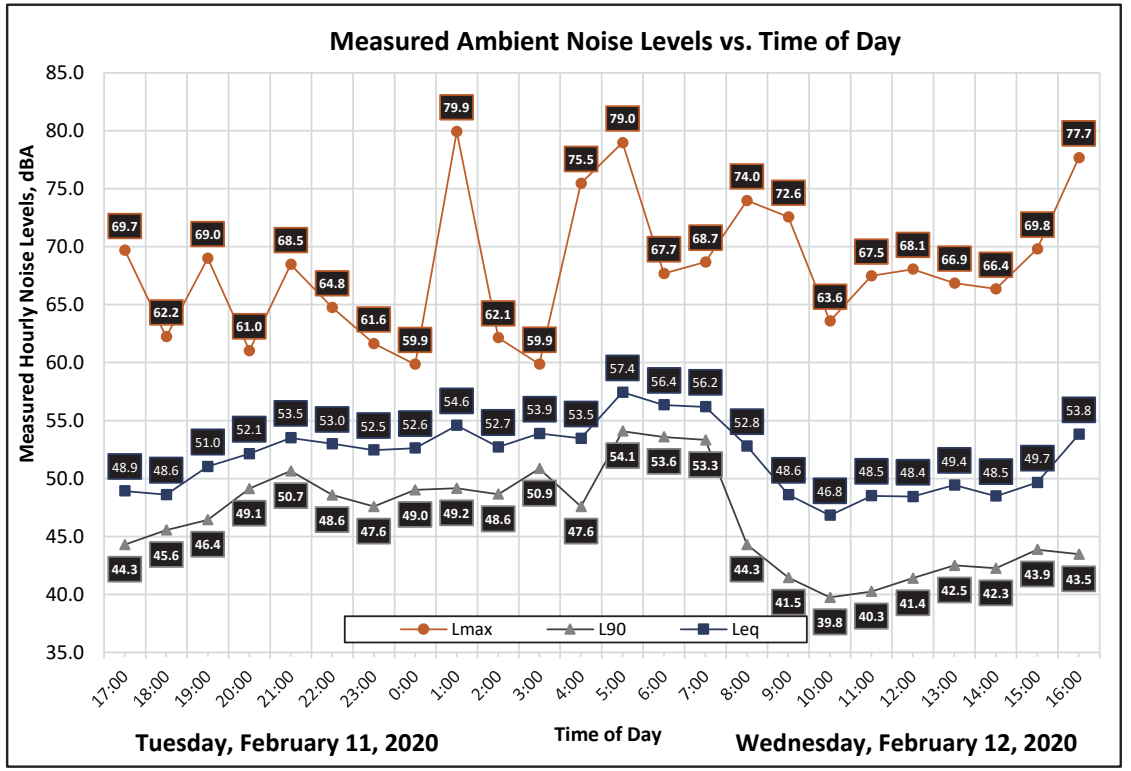



Appendix B4: Continuous Noise Monitoring Results

Site: LT-4
Project: 5175 Vincent Ave. Irwindale
Location: Northwestern Project Boundary
Coordinates: 34.1027966°, -117.9296225°
Meter: LDL 812-2
Calibrator: CAL200

Date	Time	Measured Level, dBA			
		L_{eq}	L_{max}	L_{50}	L_{90}
Tuesday, February 11, 2020	17:00	50.5	68.7	48.6	46.2
Tuesday, February 11, 2020	18:00	51.0	73.0	48.9	46.1
Tuesday, February 11, 2020	19:00	51.7	73.7	48.5	46.4
Tuesday, February 11, 2020	20:00	50.2	61.6	49.4	47.6
Tuesday, February 11, 2020	21:00	51.5	66.2	50.6	48.6
Tuesday, February 11, 2020	22:00	50.8	62.7	50.0	46.4
Tuesday, February 11, 2020	23:00	52.2	64.6	51.5	46.7
Tuesday, February 11, 2020	0:00	52.1	60.7	51.1	48.4
Wednesday, February 12, 2020	1:00	52.3	68.4	51.2	49.1
Wednesday, February 12, 2020	2:00	52.9	58.9	52.4	49.8
Wednesday, February 12, 2020	3:00	52.5	65.2	51.6	49.4
Wednesday, February 12, 2020	4:00	54.0	69.5	52.6	47.0
Wednesday, February 12, 2020	5:00	55.2	67.4	54.5	52.2
Wednesday, February 12, 2020	6:00	57.8	78.8	56.7	54.2
Wednesday, February 12, 2020	7:00	55.4	66.9	54.6	52.6
Wednesday, February 12, 2020	8:00	53.6	78.4	48.9	46.1
Wednesday, February 12, 2020	9:00	49.3	65.8	46.8	44.0
Wednesday, February 12, 2020	10:00	47.6	66.5	44.7	42.4
Wednesday, February 12, 2020	11:00	48.0	65.3	44.7	42.7
Wednesday, February 12, 2020	12:00	49.9	69.9	46.0	43.7
Wednesday, February 12, 2020	13:00	49.3	65.5	46.7	44.3
Wednesday, February 12, 2020	14:00	50.0	66.2	47.2	45.1
Wednesday, February 12, 2020	15:00	51.2	67.9	48.7	46.3
Wednesday, February 12, 2020	16:00	53.0	73.9	48.4	45.6

Statistics	Leq	Lmax	L50	L90
Day Average	51.3	68.6	48.2	45.8
Night Average	53.8	66.2	52.4	49.2
Day Low	47.6	61.6	44.7	42.4
Day High	55.4	78.4	54.6	52.6
Night Low	50.8	58.9	50.0	46.4
Night High	57.8	78.8	56.7	54.2
Ldn	60.0	Day %		48.2
CNEL	60.1	Night %		51.8

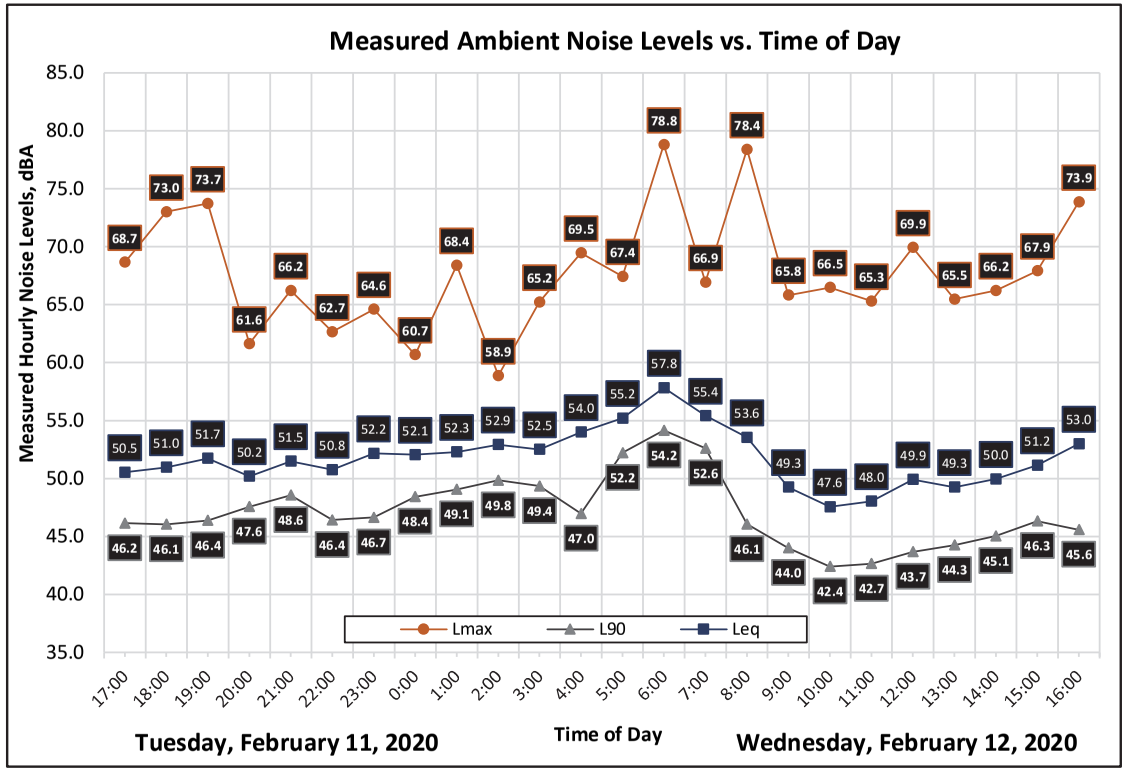



Appendix C: Traffic Noise Calculation Inputs and Results



Appendix C-1

FHWA-RD-77-108 Highway Traffic Noise Prediction Model

Project #: 190602
Description: 5175 Vincent Avenue - Existing
Ldn/CNEL: Ldn
Hard/Soft: Soft

Segment	Roadway	Segment	ADT	Day %	Eve %	Night %	% Med. Trucks	% Hvy. Trucks	Speed	Distance	Offset (dB)	Contours (ft.) - No Offset 60 dBA	65 dBA	70 dBA	Level, dBA
1	Arrow Hwy.	Maine Ave. to Azusa Canyon Rd.	24,540	83	0	17	2.0%	5.0%	45	160	0	389	181	84	65.8
2	Arrow Hwy.	Azusa Canyon Rd. to 4th St.	28,630	83	0	17	2.0%	5.0%	45	500	0	431	200	93	59.0
3	Arrow Hwy.	4th St. to Irwindale Ave.	26,900	83	0	17	2.0%	5.0%	45	80	0	414	192	89	70.7
4	Arrow Hwy.	Irwindale Ave. to Vincent Ave.	22,430	83	0	17	2.0%	5.0%	45	60	0	367	170	79	71.8
5	Arrow Hwy.	East of Vincent Ave.	22,290	83	0	17	2.0%	5.0%	45	50	0	365	169	79	73.0
6	Azusa Ave.	Paramount St. Gladstone St.	19,400	83	0	17	2.0%	5.0%	35	70	0	248	115	53	68.2
7	Cypress St.	West of Vincent Ave.	15,680	83	0	17	1.0%	1.0%	40	100	0	172	80	37	63.5
8	Cypress St.	East of Vincent Ave.	16,090	83	0	17	1.0%	1.0%	40	50	0	175	81	38	68.2
9	Gladstone St.	Vincent Ave. to Vernon Ave.	15,740	83	0	17	2.0%	5.0%	45	45	0	289	134	62	72.1
10	Gladstone St.	Vernon Ave. to Azusa Ave.	14,760	83	0	17	2.0%	5.0%	45	65	0	277	129	60	69.5
11	Irwindale Ave.	South of Arrow Hwy.	15,650	83	0	17	1.0%	1.0%	35	50	0	139	64	30	66.7
13	Vincent Ave.	Gladstone St. to Arrow Hwy.	9,470	83	0	17	2.0%	5.0%	50	50	0	236	110	51	70.1
14	Vincent Ave.	Project North Driveway to Project South Driveway	10,860	83	0	17	2.0%	5.0%	50	50	0	259	120	56	70.7
15	Vincent Ave.	Project South Driveway to Cypress St.	10,860	83	0	17	2.0%	5.0%	50	45	0	259	120	56	71.4
16	Vincent Ave.	Project South Driveway to Cypress St.	11,130	83	0	17	2.0%	5.0%	50	45	0	263	122	57	71.5
17	Vincent Ave.	Cypress St. to San Bernardino Rd.	12,960	83	0	17	2.0%	5.0%	40	45	0	220	102	47	70.4
18	Vincent Ave.	San Bernardino to Badillo St.	15,220	83	0	17	2.0%	5.0%	40	500	-5	245	114	53	50.4
19	Vincent Ave.	Badillo St. to Puente Ave.	17,940	83	0	17	2.0%	5.0%	40	55	0	274	127	59	70.5
20	Vincent Ave.	Puente Ave. to Rowland St.	18,500	83	0	17	2.0%	5.0%	40	50	0	279	130	60	71.2
21	Vincent Ave.	Rowland St. to Workman Ave.	19,530	83	0	17	2.0%	5.0%	40	50	0	290	134	62	71.4
22	Vincent Ave.	Workman Ave. to I-10 WB Ramps	22,640	83	0	17	2.0%	5.0%	40	60	0	320	148	69	70.9

SAXELBY ACOUSTICS
Acoustics · Noise · Vibration

Appendix C-2

FHWA-RD-77-108 Highway Traffic Noise Prediction Model

Project #: 190602
Description: 5175 Vincent Avenue - Existing Plus Project
Ldn/CNEL: Ldn
Hard/Soft: Soft

Segment	Roadway	Segment	ADT	Day %	Eve %	Night %	% Med. Trucks	% Hvy. Trucks	Speed	Distance	Offset (dB)	Contours (ft.) - No Offset 60 dBA	65 dBA	70 dBA	Level, dBA
1	Arrow Hwy.	Maine Ave. to Azusa Canyon Rd.	25,830	83	0	17	2.3%	5.4%	45	160	0	415	193	89	66.2
2	Arrow Hwy.	Azusa Canyon Rd. to 4th St.	30,000	83	0	17	2.3%	5.4%	45	500	0	457	212	99	59.4
3	Arrow Hwy.	4th St. to Irwindale Ave.	28,270	83	0	17	2.3%	5.4%	45	80	0	440	204	95	71.1
4	Arrow Hwy.	Irwindale Ave. to Vincent Ave.	23,880	83	0	17	2.4%	5.5%	45	60	0	396	184	85	72.3
5	Arrow Hwy.	East of Vincent Ave.	22,570	83	0	17	2.1%	5.1%	45	50	0	371	172	80	73.1
6	Azusa Ave.	Paramount St. Gladstone St.	20,000	83	0	17	2.2%	5.3%	35	70	0	259	120	56	68.5
7	Cypress St.	West of Vincent Ave.	15,760	83	0	17	1.0%	1.0%	40	100	0	173	80	37	63.6
8	Cypress St.	East of Vincent Ave.	16,170	83	0	17	1.0%	1.0%	40	50	0	176	81	38	68.2
9	Gladstone St.	Vincent Ave. to Vernon Ave.	16,780	83	0	17	2.4%	5.5%	45	45	0	313	145	68	72.6
10	Gladstone St.	Vernon Ave. to Azusa Ave.	15,500	83	0	17	2.3%	5.4%	45	65	0	295	137	64	69.8
11	Irwindale Ave.	South of Arrow Hwy.	15,730	83	0	17	1.0%	1.0%	35	50	0	139	65	30	66.7
13	Vincent Ave.	Gladstone St. to Arrow Hwy.	11,150	83	0	17	2.9%	6.3%	50	50	0	285	132	61	71.3
14	Vincent Ave.	Project North Driveway to Project South Driveway	12,800	83	0	17	2.9%	6.3%	50	50	0	312	145	67	71.9
15	Vincent Ave.	Project South Driveway to Cypress St.	11,820	83	0	17	2.5%	5.7%	50	45	0	286	133	62	72.0
16	Vincent Ave.	Project South Driveway to Cypress St.	12,090	83	0	17	2.5%	5.7%	50	45	0	290	134	62	72.1
17	Vincent Ave.	Cypress St. to San Bernardino Rd.	13,760	83	0	17	2.4%	5.5%	40	45	0	238	111	51	70.9
18	Vincent Ave.	San Bernardino to Badillo St.	16,020	83	0	17	2.3%	5.4%	40	500	-5	262	122	57	50.8
19	Vincent Ave.	Badillo St. to Puente Ave.	18,580	83	0	17	2.2%	5.3%	40	55	0	287	133	62	70.8
20	Vincent Ave.	Puente Ave. to Rowland St.	19,140	83	0	17	2.2%	5.3%	40	50	0	292	136	63	71.5
21	Vincent Ave.	Rowland St. to Workman Ave.	20,050	83	0	17	2.2%	5.2%	40	50	0	300	139	65	71.7
22	Vincent Ave.	Workman Ave. to I-10 WB Ramps	23,160	83	0	17	2.1%	5.2%	40	60	0	330	153	71	71.1

Appendix C-3

FHWA-RD-77-108 Highway Traffic Noise Prediction Model

Project #: 190602
Description: 5175 Vincent Avenue - Future Baseline no Project
Ldn/CNEL: Ldn
Hard/Soft: Soft

Segment	Roadway	Segment	ADT	Day %	Eve %	Night %	% Med. Trucks	% Hvy. Trucks	Speed	Distance	Offset (dB)	Contours (ft.) - No Offset 60 dBA	65 dBA	70 dBA	Level, dBA
1	Arrow Hwy.	Maine Ave. to Azusa Canyon Rd.	24,790	83	0	17	2.0%	5.0%	45	160	0	392	182	84	65.8
2	Arrow Hwy.	Azusa Canyon Rd. to 4th St.	28,920	83	0	17	2.0%	5.0%	45	500	0	434	202	94	59.1
3	Arrow Hwy.	4th St. to Irwindale Ave.	27,180	83	0	17	2.0%	5.0%	45	80	0	417	193	90	70.7
4	Arrow Hwy.	Irwindale Ave. to Vincent Ave.	22,660	83	0	17	2.0%	5.0%	45	60	0	369	171	80	71.8
5	Arrow Hwy.	East of Vincent Ave.	22,500	83	0	17	2.0%	5.0%	45	50	0	367	170	79	73.0
6	Azusa Ave.	Paramount St. Gladstone St.	19,600	83	0	17	2.0%	5.0%	35	70	0	249	116	54	68.3
7	Cypress St.	West of Vincent Ave.	15,840	83	0	17	1.0%	1.0%	40	100	0	173	80	37	63.6
8	Cypress St.	East of Vincent Ave.	16,250	83	0	17	1.0%	1.0%	40	50	0	176	82	38	68.2
9	Gladstone St.	Vincent Ave. to Vernon Ave.	15,900	83	0	17	2.0%	5.0%	45	45	0	291	135	63	72.2
10	Gladstone St.	Vernon Ave. to Azusa Ave.	14,920	83	0	17	2.0%	5.0%	45	65	0	279	130	60	69.5
11	Irwindale Ave.	South of Arrow Hwy.	15,810	83	0	17	1.0%	1.0%	35	50	0	140	65	30	66.7
13	Vincent Ave.	Gladstone St. to Arrow Hwy.	9,570	83	0	17	2.0%	5.0%	50	50	0	238	110	51	70.2
14	Vincent Ave.	Project North Driveway to Project South Driveway	10,970	83	0	17	2.0%	5.0%	50	50	0	260	121	56	70.7
15	Vincent Ave.	Project South Driveway to Cypress St.	10,970	83	0	17	2.0%	5.0%	50	45	0	260	121	56	71.4
16	Vincent Ave.	Project South Driveway to Cypress St.	11,230	83	0	17	2.0%	5.0%	50	45	0	264	123	57	71.5
17	Vincent Ave.	Cypress St. to San Bernardino Rd.	13,080	83	0	17	2.0%	5.0%	40	45	0	222	103	48	70.4
18	Vincent Ave.	San Bernardino to Badillo St.	15,390	83	0	17	2.0%	5.0%	40	500	-5	247	115	53	50.4
19	Vincent Ave.	Badillo St. to Puente Ave.	18,120	83	0	17	2.0%	5.0%	40	55	0	276	128	59	70.5
20	Vincent Ave.	Puente Ave. to Rowland St.	18,670	83	0	17	2.0%	5.0%	40	50	0	281	131	61	71.3
21	Vincent Ave.	Rowland St. to Workman Ave.	19,710	83	0	17	2.0%	5.0%	40	50	0	292	135	63	71.5
22	Vincent Ave.	Workman Ave. to I-10 WB Ramps	22,870	83	0	17	2.0%	5.0%	40	60	0	322	149	69	70.9

Appendix C-4

FHWA-RD-77-108 Highway Traffic Noise Prediction Model

Project #: 190602
Description: 5175 Vincent Avenue - Future Baseline with Project
Ldn/CNEL: Ldn
Hard/Soft: Soft

Segment	Roadway	Segment	ADT	Day %	Eve %	Night %	% Med. Trucks	% Hvy. Trucks	Speed	Distance	Offset (dB)	Contours (ft.) - No Offset 60 dBA	65 dBA	70 dBA	Level, dBA
1	Arrow Hwy.	Maine Ave. to Azusa Canyon Rd.	26,080	83	0	17	2.3%	5.4%	45	160	0	417	194	90	66.2
2	Arrow Hwy.	Azusa Canyon Rd. to 4th St.	30,290	83	0	17	2.3%	5.4%	45	500	0	460	214	99	59.5
3	Arrow Hwy.	4th St. to Irwindale Ave.	28,550	83	0	17	2.3%	5.4%	45	80	0	443	206	95	71.2
4	Arrow Hwy.	Irwindale Ave. to Vincent Ave.	24,110	83	0	17	2.4%	5.5%	45	60	0	399	185	86	72.3
5	Arrow Hwy.	East of Vincent Ave.	22,780	83	0	17	2.1%	5.1%	45	50	0	373	173	80	73.1
6	Azusa Ave.	Paramount St. Gladstone St.	20,200	83	0	17	2.2%	5.2%	35	70	0	260	121	56	68.6
7	Cypress St.	West of Vincent Ave.	15,920	83	0	17	1.0%	1.0%	40	100	0	174	81	37	63.6
8	Cypress St.	East of Vincent Ave.	16,330	83	0	17	1.0%	1.0%	40	50	0	177	82	38	68.2
9	Gladstone St.	Vincent Ave. to Vernon Ave.	16,940	83	0	17	2.4%	5.5%	45	45	0	315	146	68	72.7
10	Gladstone St.	Vernon Ave. to Azusa Ave.	15,660	83	0	17	2.3%	5.4%	45	65	0	297	138	64	69.9
11	Irwindale Ave.	South of Arrow Hwy.	15,890	83	0	17	1.0%	1.0%	35	50	0	140	65	30	66.7
13	Vincent Ave.	Gladstone St. to Arrow Hwy.	11,250	83	0	17	2.9%	6.2%	50	50	0	286	133	62	71.4
14	Vincent Ave.	Project North Driveway to Project South Driveway	12,910	83	0	17	2.5%	5.1%	50	50	0	294	136	63	71.5
15	Vincent Ave.	Project South Driveway to Cypress St.	11,930	83	0	17	2.0%	4.4%	50	45	0	267	124	57	71.6
16	Vincent Ave.	Project South Driveway to Cypress St.	12,190	83	0	17	2.5%	5.7%	50	45	0	291	135	63	72.2
17	Vincent Ave.	Cypress St. to San Bernardino Rd.	13,880	83	0	17	2.4%	5.5%	40	45	0	240	111	52	70.9
18	Vincent Ave.	San Bernardino to Badillo St.	16,190	83	0	17	2.3%	5.4%	40	500	-5	264	123	57	50.8
19	Vincent Ave.	Badillo St. to Puente Ave.	18,760	83	0	17	2.2%	5.3%	40	55	0	289	134	62	70.8
20	Vincent Ave.	Puente Ave. to Rowland St.	19,310	83	0	17	2.2%	5.3%	40	50	0	294	136	63	71.5
21	Vincent Ave.	Rowland St. to Workman Ave.	20,230	83	0	17	2.2%	5.2%	40	50	0	302	140	65	71.7
22	Vincent Ave.	Workman Ave. to I-10 WB Ramps	23,390	83	0	17	2.1%	5.2%	40	60	0	332	154	71	71.1

Appendix C-5

FHWA-RD-77-108 Highway Traffic Noise Prediction Model

Project #: 190602
Description: 5175 Vincent Avenue - Future Baseline Cumulative no Project
Ldn/CNEL: Ldn
Hard/Soft: Soft

Segment	Roadway	Segment	ADT	Day %	Eve %	Night %	% Med. Trucks	% Hvy. Trucks	Speed	Distance	Offset (dB)	Contours (ft.) - No Offset 60 dBA	65 dBA	70 dBA	Level, dBA
1	Arrow Hwy.	Maine Ave. to Azusa Canyon Rd.	27,550	83	0	17	2.0%	5.0%	45	160	0	420	195	91	66.3
2	Arrow Hwy.	Azusa Canyon Rd. to 4th St.	31,250	83	0	17	2.0%	5.0%	45	500	0	457	212	99	59.4
3	Arrow Hwy.	4th St. to Irwindale Ave.	29,510	83	0	17	2.0%	5.0%	45	80	0	440	204	95	71.1
4	Arrow Hwy.	Irwindale Ave. to Vincent Ave.	25,270	83	0	17	2.0%	5.0%	45	60	0	397	184	86	72.3
5	Arrow Hwy.	East of Vincent Ave.	23,420	83	0	17	2.0%	5.0%	45	50	0	377	175	81	73.2
6	Azusa Ave.	Paramount St. Gladstone St.	20,490	83	0	17	2.0%	5.0%	35	70	0	257	119	55	68.5
7	Cypress St.	West of Vincent Ave.	15,850	83	0	17	1.0%	1.0%	40	100	0	173	80	37	63.6
8	Cypress St.	East of Vincent Ave.	16,280	83	0	17	1.0%	1.0%	40	50	0	176	82	38	68.2
9	Gladstone St.	Vincent Ave. to Vernon Ave.	16,330	83	0	17	2.0%	5.0%	45	45	0	297	138	64	72.3
10	Gladstone St.	Vernon Ave. to Azusa Ave.	15,340	83	0	17	2.0%	5.0%	45	65	0	285	132	61	69.6
11	Irwindale Ave.	South of Arrow Hwy.	16,370	83	0	17	1.0%	1.0%	35	50	0	143	66	31	66.8
13	Vincent Ave.	Gladstone St. to Arrow Hwy.	10,210	83	0	17	2.0%	5.0%	50	50	0	248	115	53	70.4
14	Vincent Ave.	Project North Driveway to Project South Driveway	11,730	83	0	17	2.0%	5.0%	50	50	0	272	126	59	71.0
15	Vincent Ave.	Project South Driveway to Cypress St.	11,730	83	0	17	2.0%	5.0%	50	45	0	272	126	59	71.7
16	Vincent Ave.	Project South Driveway to Cypress St.	11,990	83	0	17	2.0%	5.0%	50	45	0	276	128	60	71.8
17	Vincent Ave.	Cypress St. to San Bernardino Rd.	13,800	83	0	17	2.0%	5.0%	40	45	0	230	107	50	70.6
18	Vincent Ave.	San Bernardino to Badillo St.	16,110	83	0	17	2.0%	5.0%	40	500	-5	255	118	55	50.6
19	Vincent Ave.	Badillo St. to Puente Ave.	18,590	83	0	17	2.0%	5.0%	40	55	0	280	130	60	70.6
20	Vincent Ave.	Puente Ave. to Rowland St.	19,140	83	0	17	2.0%	5.0%	40	50	0	286	133	62	71.4
21	Vincent Ave.	Rowland St. to Workman Ave.	19,980	83	0	17	2.0%	5.0%	40	50	0	294	137	63	71.5
22	Vincent Ave.	Workman Ave. to I-10 WB Ramps	23,150	83	0	17	2.0%	5.0%	40	60	0	325	151	70	71.0

Appendix C-6

FHWA-RD-77-108 Highway Traffic Noise Prediction Model

Project #: 190602
Description: 5175 Vincent Avenue - Future Baseline Cumulative with Project
Ldn/CNEL: Ldn
Hard/Soft: Soft

Segment	Roadway	Segment	ADT	Day %	Eve %	Night %	% Med. Trucks	% Hvy. Trucks	Speed	Distance	Offset (dB)	Contours (ft.) - No Offset 60 dBA	65 dBA	70 dBA	Level, dBA
1	Arrow Hwy.	Maine Ave. to Azusa Canyon Rd.	28,840	83	0	17	2.3%	5.4%	45	160	0	445	207	96	66.7
2	Arrow Hwy.	Azusa Canyon Rd. to 4th St.	32,620	83	0	17	2.3%	5.4%	45	500	0	482	224	104	59.8
3	Arrow Hwy.	4th St. to Irwindale Ave.	30,880	83	0	17	2.3%	5.4%	45	80	0	466	216	100	71.5
4	Arrow Hwy.	Irwindale Ave. to Vincent Ave.	26,720	83	0	17	2.3%	5.5%	45	60	0	425	197	92	72.8
5	Arrow Hwy.	East of Vincent Ave.	23,700	83	0	17	2.1%	5.1%	45	50	0	383	178	83	73.3
6	Azusa Ave.	Paramount St. Gladstone St.	21,090	83	0	17	2.2%	5.2%	35	70	0	268	124	58	68.7
7	Cypress St.	West of Vincent Ave.	15,930	83	0	17	1.0%	1.0%	40	100	0	174	81	37	63.6
8	Cypress St.	East of Vincent Ave.	16,360	83	0	17	1.0%	1.0%	40	50	0	177	82	38	68.2
9	Gladstone St.	Vincent Ave. to Vernon Ave.	17,370	83	0	17	2.4%	5.5%	45	45	0	320	149	69	72.8
10	Gladstone St.	Vernon Ave. to Azusa Ave.	16,080	83	0	17	2.3%	5.4%	45	65	0	302	140	65	70.0
11	Irwindale Ave.	South of Arrow Hwy.	16,450	83	0	17	1.0%	1.0%	35	50	0	143	67	31	66.9
13	Vincent Ave.	Gladstone St. to Arrow Hwy.	11,890	83	0	17	2.9%	6.2%	50	50	0	296	137	64	71.6
14	Vincent Ave.	Project North Driveway to Project South Driveway	13,670	83	0	17	2.9%	6.2%	50	50	0	325	151	70	72.2
15	Vincent Ave.	Project South Driveway to Cypress St.	12,690	83	0	17	2.5%	5.6%	50	45	0	299	139	64	72.3
16	Vincent Ave.	Project South Driveway to Cypress St.	12,950	83	0	17	2.5%	5.6%	50	45	0	303	140	65	72.4
17	Vincent Ave.	Cypress St. to San Bernardino Rd.	14,600	83	0	17	2.3%	5.5%	40	45	0	247	115	53	71.1
18	Vincent Ave.	San Bernardino to Badillo St.	16,910	83	0	17	2.3%	5.4%	40	500	-5	272	126	59	51.0
19	Vincent Ave.	Badillo St. to Puente Ave.	19,230	83	0	17	2.2%	5.3%	40	55	0	293	136	63	70.9
20	Vincent Ave.	Puente Ave. to Rowland St.	19,780	83	0	17	2.2%	5.3%	40	50	0	299	139	64	71.6
21	Vincent Ave.	Rowland St. to Workman Ave.	20,500	83	0	17	2.2%	5.2%	40	50	0	304	141	66	71.8
22	Vincent Ave.	Workman Ave. to I-10 WB Ramps	23,670	83	0	17	2.1%	5.2%	40	60	0	334	155	72	71.2

Appendix D

Traffic Impact Analysis

VINCENT AVENUE INDUSTRIAL BUILDING TRAFFIC IMPACT ANALYSIS

City of Irwindale
June 30, 2020
(Updated December 15, 2020)

Traffic Engineering ● Transportation Planning ● Parking ● Noise & Vibration
Air Quality ● Global Climate Change ● Health Risk Assessment

VINCENT AVENUE INDUSTRIAL BUILDING TRAFFIC IMPACT ANALYSIS

City of Irwindale
June 30, 2020
(Updated December 15, 2020)

prepared by
Brandon Alvarado, EIT
Giancarlo Ganddini, PE, PTP



GANDDINI GROUP INC
550 Parkcenter Drive, Suite 202
Santa Ana, CA 92705
(714) 795-3100 | www.ganddini.com

19257

TABLE OF CONTENTS

EXECUTIVE SUMMARY

1. INTRODUCTION 1
Purpose and Objectives 1
Project Description 1
Study Area 1
Analysis Scenarios 2

2. METHODOLOGY 5
Level of Service/General Plan Conformance Analysis (Non-CEQA) 5
Intersection Capacity Utilization Methodology 5
Intersection Delay Methodology 6
Performance Standards 6
Requirements for Improvements 7
Vehicle Miles Traveled Analysis (CEQA) 8

3. EXISTING CONDITIONS 9
Existing Roadway System 9
Existing Traffic Volumes 9
Existing Intersection Capacity Utilization/Level of Service 9
City of Irwindale General Plan Circulation Element 9
City of Irwindale Truck Routes 9
Existing Pedestrian and Bicycle Routes 9
Transit Facilities 10
Existing Traffic Signal Warrant Analysis 10

4. PROJECT TRIP FORECASTS 20
Project Description 20
Project Trip Generation 20
Project Trip Distribution and Assignment 20

5. FUTURE VOLUME FORECASTS 26
Cumulative Trips 26
Ambient Growth Rate 26
Other Development 26
Analysis Scenario Volume Forecasts 26
Existing Plus Project 26
Future Baseline Without Project 26
Future Baseline With Project 26
Future Baseline Plus Cumulative Projects Without Project 26
Future Baseline Plus Cumulative Projects With Project 27

6. FUTURE OPERATIONAL ANALYSIS 40
Existing Plus Project 40
Intersection Capacity Utilization/Delay and Levels of Service 40
Significant Impact Evaluation 40
Future Baseline Without Project 40
Intersection Capacity Utilization/Delay and Levels of Service 40
Future Baseline With Project 41
Intersection Capacity Utilization/Delay and Levels of Service 41
Significant Impact Evaluation 41
Future Baseline Plus Cumulative Projects Without Project 42

Intersection Capacity Utilization/Delay and Levels of Service 42
Future Baseline Plus Cumulative Projects With Project 42
Intersection Capacity Utilization/Delay and Levels of Service 42
Significant Impact Evaluation 42

7. FREEWAY ANALYSIS 61

Definition of Deficiency and Significant Impact 61
Project Threshold Evaluation 61
California Department of Transportation Percent of Capacity Threshold 61
California Department of Transportation Freeway Review 62

8. CONGESTION MANAGEMENT PROGRAM 63

9. VEHICLE MILES TRAVELED (VMT) 64

Background 64
Threshold of Significance 64
Screening Assessment 64
VMT Analysis 66
VMT Mitigation Measures 67

10. MITIGATION MEASURES 70

Summary of Level of Service Mitigation Measures (Non-CEQA) 70
Project Fair Share Contribution 70
Summary of VMT Mitigation Measures (CEQA) 71

11. CONCLUSIONS 73

Circulation Recommendations 73

APPENDICES

Appendix A Glossary

Appendix B Volume Count Worksheets

Appendix C Level of Service Worksheets

Appendix D Other Development Data

Appendix E Traffic Signal Warrant Worksheets

Appendix F SGVCOG VMT Evaluation Tool Report

LIST OF TABLES

Table 1. Existing Intersection Levels of Service 11

Table 2. Project Trip Generation 21

Table 3. Cumulative Projects Trip Generation 28

Table 4. Existing Plus Project Intersection Levels of Service 44

Table 5. Existing Plus Project Significant Impact Evaluation 46

Table 6. Future Baseline Without Project Intersection Levels of Service 49

Table 7. Future Baseline With Project Intersection Levels of Service 50

Table 8. Future Baseline With Project Significant Impact Evaluation 52

Table 9. Future Baseline Plus Cumulative Projects Without Project Intersection Levels of Service 55

Table 10. Future Baseline Plus Cumulative Projects With Project Intersection Levels of Service 56
Table 11. Future Baseline Plus Cumulative Projects With Projects Significant Impact Evaluation 58
Table 12. City of Irwindale VMT Thresholds of Significance 69
Table 13. Project Fair Share Contribution 72

LIST OF FIGURES

Figure 1. Project Location Map 3
Figure 2. Site Plan 4
Figure 3. Existing Lane Geometry and Intersection Traffic Controls 12
Figure 4. Existing AM Peak Hour Intersection Turning Movement Volumes 13
Figure 5. Existing PM Peak Hour Intersection Turning Movement Volumes 14
Figure 6. City of Irwindale General Plan Circulation Element 15
Figure 7. City of Irwindale General Plan Truck Routes 16
Figure 8. Existing Pedestrian Facilities 17
Figure 9. City of Irwindale Bicycle Master Plan 18
Figure 10. Transit Service Map 19
Figure 11. Project Trip Distribution – Cars 22
Figure 12. Project Trip Distribution – Trucks 23
Figure 13. Project AM Peak Hour Intersection Turning Movement Volumes 24
Figure 14. Project PM Peak Hour Intersection Turning Movement Volumes 25
Figure 15. Cumulative Project Location Map 29
Figure 16. Existing Plus Project AM Peak Hour Intersection Turning Movement Volumes 30
Figure 17. Existing Plus Project PM Peak Hour Intersection Turning Movement Volumes 31
Figure 18. Future Baseline Without Project AM Peak Hour Intersection Turning Movement Volumes 32
Figure 19. Future Baseline Without Project PM Peak Hour Intersection Turning Movement Volumes 33
Figure 20. Future Baseline With Project AM Peak Hour Intersection Turning Movement Volumes 34
Figure 21. Future Baseline With Project PM Peak Hour Intersection Turning Movement Volumes 35
Figure 22. Future Baseline Plus Cumulative Projects Without Project AM Peak Hour Intersection Turning Movement Volumes 36
Figure 23. Future Baseline Plus Cumulative Projects Without Project PM Peak Hour Intersection Turning Movement Volumes 37
Figure 24. Future Baseline Plus Cumulative Projects With Project AM Peak Hour Intersection Turning Movement Volumes 38
Figure 25. Future Baseline Plus Cumulative Projects With Project PM Peak Hour Intersection Turning Movement Volumes 39
Figure 26. Circulation Recommendations 74

EXECUTIVE SUMMARY

The purpose of this traffic impact analysis is to provide an assessment of traffic operations resulting from development of the proposed Vincent Avenue Industrial Building and to identify measures necessary to mitigate potentially significant traffic impacts. The traffic issues related to the proposed land use and development have been evaluated in the context of the California Environmental Quality Act (CEQA). The City of Irwindale is the lead agency responsible for evaluation of potential environmental impacts associated with the proposed project. This traffic impact analysis includes Existing Plus Project conditions and Year 2020 (cumulative) traffic conditions.

Although this is a technical study, effort has been made to write the report clearly and concisely. A glossary is provided in Appendix A to assist the reader with traffic engineering terms.

Project Description

The approximately 26-acre project site is located west of Vincent Avenue between Arrow Highway and the Little Dalton Wash Channel in the City of Irwindale. The proposed project consists of a 545,735 square foot industrial building. The project site is proposed to provide full access driveways to Vincent Avenue. The land is zoned M-2 (Heavy Manufacturing), designated "Industrial/Business Park" and "Residential" by the City of Irwindale General Plan, and subject to the Irwindale Commercial & Industrial Design Guidelines.

Existing Level of Service

Existing Conditions: The study intersections currently operate within acceptable Levels of Service during the peak hours for Existing traffic conditions, except for the following study intersections that operate at unacceptable Levels of Service (see Table 1):

- I-605 Freeway NB Ramps/Live Oak Avenue - #2 (morning/evening peak hours)
- Azusa Canyon Road/Arrow Highway - #9 (morning/evening peak hours)

Project Trip Generation

The proposed project is forecast to generate a total of approximately 3,437 daily trips in passenger car equivalents, 485 passenger car equivalent trips of which will occur during the morning peak hour and 436 passenger car equivalent trips of which will occur during the evening peak hour (see Table 2).

Future Level of Service & Improvements (Non-CEQA)

Existing Plus Project Conditions: The study intersections are projected to operate within acceptable Levels of Service during the peak hours for Existing Plus Project traffic conditions, except for the following study intersections that are projected to operate at unacceptable Levels of Service (see Table 4):

- I-605 Freeway NB Ramps/Live Oak Avenue - #2 (morning/evening peak hours)
- Azusa Canyon Road/Arrow Highway - #9 (morning/evening peak hours)
- Vincent Avenue/Gladstone Street - #17 (evening peak hour only)
- Alameda Avenue/I-210 WB Ramps/1st Street - #34 (morning peak hour only)

The proposed project is forecast to result in no significant traffic impact with the following study intersection improvements for Existing Plus Project traffic conditions:

- Mitigation Measure #2A-2C: I-605 Freeway NB Ramps/Live Oak Avenue - #2
  - Install a traffic signal.
  - Construct an additional right-turn lane at the northbound approach.
  - Construct an additional right-turn lane at the southbound approach.

- Mitigation Measure #9A-9B: Azusa Canyon Road/Arrow Highway - #9
  - Re-stripe to create a shared through/right-turn lane at the eastbound approach.
  - Re-stripe to create a shared through-right-turn lane at the westbound approach.

- Mitigation Measure #17: Vincent Avenue/Gladstone Street - #17
  - Re-stripe to create a shared left-turn/through/right-turn lane at the northbound approach.

- Mitigation Measure #34A-34B: Alameda Avenue/I-210 WB Ramps/1st Street - #34
  - Restripe the westbound approach to consist of two left turn lanes, one through lane, and one right turn lane
  - Modify signalization as necessary to accommodate east-west protected signal phasing, including necessary signal poles, mast arms, and signal heads.

Future Baseline Without Project Conditions: The study intersections are projected to operate within acceptable Levels of Service during the peak hours for Future Baseline Without Project traffic conditions, except for the following study intersections that are projected to operate at unacceptable Levels of Service (see Table 6):

- I-605 Freeway NB Ramps/Live Oak Avenue - #2 (morning/evening peak hours)
- Azusa Canyon Road/Arrow Highway - #9 (morning/evening peak hours)
- Alameda Avenue/I-210 WB Ramps/1st Street - #34 (morning peak hour only)

Future Baseline With Project Conditions: The study intersections are projected to operate within acceptable Levels of Service during the peak hours for Future Baseline With Project traffic conditions, except for the following study intersections that are projected to operate at unacceptable Levels of Service (see Table 7):

- I-605 Freeway NB Ramps/Live Oak Avenue - #2 (morning/evening peak hours)
- Arrow Highway/Live Oak Avenue - #7 (evening peak hour only)
- Azusa Canyon Road/Arrow Highway - #9 (morning/evening peak hours)
- Vincent Avenue/Gladstone Street - #17 (evening peak hour only)
- Alameda Avenue/I-210 WB Ramps/1st Street - #34 (morning peak hour only)

The proposed project is forecast to result in no significant traffic impact with the following study intersection improvements for Future Baseline With Project traffic conditions:

- Mitigation Measure #2A-2C: I-605 Freeway NB Ramps/Live Oak Avenue - #2
  - Install a traffic signal.
  - Construct an additional right-turn lane at the northbound approach.
  - Construct an additional right-turn lane at the southbound approach.

- Mitigation Measure #7A-7B: Arrow Highway/Live Oak Avenue - #7
  - Re-stripe to create an additional through lane at the eastbound approach.
  - Re-stripe to create an additional through lane at the westbound approach.

- Mitigation Measure #9A-9B: Azusa Canyon Road/Arrow Highway - #9
  - Re-stripe to create a shared through/right-turn lane at the eastbound approach.
  - Re-stripe to create a shared through-right-turn lane at the westbound approach.

- Mitigation Measure #17: Vincent Avenue/Gladstone Street - #17
  - Re-stripe to create a shared left-turn/through/right-turn lane at the northbound approach.

- Mitigation Measure #34A-34B: Alameda Avenue/I-210 WB Ramps/1st Street - #34
  - Restripe the westbound approach to consist of two left turn lanes, one through lane, and one right turn lane.
  - Modify signalization as necessary to accommodate east-west protected signal phasing, including necessary signal poles, mast arms, and signal heads.

Future Baseline Plus Cumulative Projects Without Project Conditions: The study intersections are projected to operate within acceptable Levels of Service during the peak hours for Future Baseline Plus Cumulative Projects Without Project traffic conditions, except for the following study intersections that are projected to operate at unacceptable Levels of Service (see Table 8):

- I-605 Freeway SB On-Ramp/Live Oak Avenue - #1 (evening peak hour only)
- I-605 Freeway NB Ramps/Live Oak Avenue - #2 (morning/evening peak hours)
- Rivergrade Road/Live Oak Avenue - #4 (evening peak hour only)
- Arrow Highway/Live Oak Avenue - #7 (evening peak hour only)
- Azusa Canyon Road/Arrow Highway - #9 (morning/evening peak hours)
- Alameda Avenue/I-210 WB Ramps/1st Street - #34 (morning peak hour only)

Future Baseline Plus Cumulative Projects With Project Conditions: The study intersections are projected to operate within acceptable Levels of Service during the peak hours for Future Baseline Plus Cumulative Projects With Project traffic conditions, except for the following study intersections that are projected to operate at unacceptable Levels of Service (see Table 10):

- I-605 Freeway SB On-Ramp/Live Oak Avenue - #1 (evening peak hour only)
- I-605 Freeway NB Ramps/Live Oak Avenue - #2 (morning/evening peak hours)
- Rivergrade Road/Live Oak Avenue - #4 (evening peak hour only)
- Arrow Highway/Live Oak Avenue - #7 (evening peak hour only)
- Azusa Canyon Road/Arrow Highway - #9 (morning/evening peak hours)
- Vincent Avenue/Gladstone Street - #17 (evening peak hour only)
- Vincent Avenue/Arrow Highway - #18 (evening peak hour only)
- Alameda Avenue/I-210 WB Ramps/1st Street - #34 (morning peak hour only)

The proposed project is forecast to result in no significant traffic impact with the following study intersection improvements for Future Baseline Plus Cumulative Projects With Project traffic conditions:

- Mitigation Measure #1: I-605 Freeway SB On-Ramp/ Live Oak Avenue - #1
  - Construct an additional left-turn lane at the westbound approach. Construct a receiving lane on the southern leg.

- Mitigation Measure #2A-2D: I-605 Freeway NB Ramps/Live Oak Avenue - #2
  - Install a traffic signal.
  - Construct an additional right-turn lane at the northbound approach.
  - Construct an additional right-turn lane at the southbound approach.
  - Re-stripe to create an additional through lane at the westbound approach.

- Mitigation Measure #7A-7B: Arrow Highway/Live Oak Avenue - #7
  - Re-stripe to create an additional through lane at the eastbound approach.
  - Re-stripe to create an additional through lane at the westbound approach.

- Mitigation Measure #9A-9B: Azusa Canyon Road/Arrow Highway - #9
  - Re-stripe to create a shared through/right-turn lane at the eastbound approach.
  - Re-stripe to create a shared through-right-turn lane at the westbound approach.

- Mitigation Measure #17: Vincent Avenue/Gladstone Street - #17
  - Re-stripe to create a shared left-turn/through/right-turn lane at the northbound approach.

- Mitigation Measure #18: Vincent Avenue/Arrow Highway - #18
  - Re-stripe to create a shared through/right-turn lane at the eastbound approach.

- Mitigation Measure #34A-34B: Alameda Avenue/I-210 WB Ramps/1st Street - #34
  - Restripe the westbound approach to consist of two left turn lanes, one through lane, and one right turn lane.
  - Modify signalization as necessary to accommodate east-west protected signal phasing, including necessary signal poles, mast arms, and signal heads.

Vehicle Miles Traveled (VMT) Analysis (CEQA)

The project-generated home-based work VMT per employee is equal to 17.38 with implementation of the proposed Mitigation Measure VMT-1, which does not exceed the City-established threshold of 15% below City of Irwindale average, or 19.13 home-based work VMT per employee; therefore, the proposed project would result in less than significant VMT impact with mitigation.

VMT Mitigation Measures

To mitigate the project VMT impacts to a less than significant level, the following mitigation measure is proposed:

Mitigation Measure VMT-1
The project employer shall be required to provide general commute benefits to employees, which may include financial subsidies or pre-tax deductions for transit, carpooling, and vanpooling activities. All employees shall be eligible for alternative transportation benefits.

The project-generated home-based work VMT per employee is equal to 17.38 with implementation of the proposed Mitigation Measure VMT-1, which does not exceed the City-established threshold of 15% below the City of Irwindale average, or 19.13 home-based work VMT per employee; therefore, the proposed project would result in less than significant VMT impact with mitigation.

Circulation Recommendations

Site-specific circulation and access recommendations are depicted on Figure 26.

Construct Vincent Avenue along the project site frontage at its ultimate half-section width, including landscaping and parkway improvements in conjunction with development, or as required by the City of Irwindale.

The site shall provide sufficient parking spaces to meet City of Irwindale parking code requirements in order to service on-site parking demand.

Sight distance at project access driveways should comply with applicable City of Irwindale/California Department of Transportation sight distance standards. The final grading, landscaping, and street improvement plans shall demonstrate that sight distance standards are met. Such plans must be reviewed by the City and approved as consistent with this measure prior to issue of grading permits.

On-site traffic signing and striping should be implemented in conjunction with detailed construction plans for the project. On-site traffic control plans shall comply with the California Manual of Uniform Traffic Control Devices (2014).

As is the case for any roadway design, the City of Irwindale should periodically review traffic operations in the vicinity of the project once the project is constructed to assure that the traffic operations are satisfactory.

1. INTRODUCTION

This section describes the purpose of this traffic impact analysis, project location, proposed development, and study area. Figure 1 shows the project location map and Figure 2 illustrates the conceptual site plan.

PURPOSE AND OBJECTIVES

The purpose of this traffic impact analysis is to provide an assessment of traffic operations resulting from development of the proposed Vincent Avenue Industrial Building and to identify measures necessary to mitigate potentially significant traffic impacts. The traffic issues related to the proposed land use and development have been evaluated in the context of the California Environmental Quality Act (CEQA). The City of Irwindale is the lead agency responsible for evaluation of potential environmental impacts associated with the proposed project. This traffic impact analysis includes Existing traffic conditions, Existing Plus Project traffic conditions, Future Baseline traffic conditions without and with the project, and Future Baseline Plus Cumulative Projects traffic conditions without and with the project.

Although this is a technical study, effort has been made to write the report clearly and concisely. A glossary is provided in Appendix A to assist the reader with traffic engineering terms.

PROJECT DESCRIPTION

The approximately 26-acre project site is located west of Vincent Avenue between Arrow Highway and the Little Dalton Wash Channel in the City of Irwindale. The proposed project consists of a 545,735 square foot industrial building. The project site is proposed to provide full access driveways to Vincent Avenue. The land is zoned M-2 (Heavy Manufacturing), designated "Industrial/Business Park", and "Residential" by the City of Irwindale General Plan, and subject to the Irwindale Commercial & Industrial Design Guidelines.

Project buildout is planned to occur over a period of two years. Therefore, this traffic impact analysis assumes the project will be completed and generating trips at its ultimate potential by Year 2020.

STUDY AREA

Based on scoping discussions with City of Irwindale staff, the study area consists of the following study intersections:

Study Intersections[1]	Jurisdiction
1. I-605 SB On-Ramp (NS) at Live Oak Avenue (EW)	Caltrans
2. I-605 NB Ramps (NS) at Live Oak Avenue (EW)	Caltrans
3. Graham Road (NS) at Live Oak Avenue (EW)	Irwindale
4. Rivergrade Road (NS) at Live Oak Avenue (EW)	Irwindale/Baldwin Park
5. Stewart Avenue (NS) at Live Oak Avenue (EW)	Irwindale/Baldwin Park
6. Baldwin Park Boulevard (NS) at Live Oak Avenue (EW)	Irwindale/Baldwin Park
7. Arrow Highway (NS) at Live Oak Avenue (EW)	Irwindale
8. Maine Avenue (NS) at Arrow Highway (EW)	Irwindale/Baldwin Park
9. Azusa Canyon Road (NS) at Arrow Highway (EW)	Irwindale
10. 4th Street (NS) at Arrow Highway (EW)	Irwindale
11. Irwindale Avenue (NS) at I-210 WB Ramps (EW)	Caltrans
12. Irwindale Avenue (NS) at I-210 EB Ramps (EW)	Caltrans

[1] (NS) = north-south roadway; (EW) = east-west roadway

Study Intersections[1]	Jurisdiction
13. Irwindale Avenue (NS) at Jardin De Roca/Irwindale Road (EW)	Irwindale
14. Irwindale Avenue (NS) at 1st Street (EW)	Irwindale/Azusa
15. Irwindale Avenue (NS) at Gladstone Street (EW)	Irwindale/Azusa
16. Irwindale Avenue (NS) at Arrow Highway (EW)	Irwindale
17. Vincent Avenue (NS) at Gladstone Street (EW)	Azusa
18. Vincent Avenue (NS) at Arrow Highway (EW)	Irwindale/Azusa/County
19. Vincent Avenue (NS) at Project North Driveway (EW)	Irwindale
20. Vincent Avenue (NS) at Project South Driveway (EW)	Irwindale
21. Vincent Avenue (NS) at Cypress Street (EW)	County of Los Angeles
22. Vincent Avenue (NS) at San Bernardino Road (EW)	Covina/County
23. Vincent Avenue (NS) at Badillo Street (EW)	Covina/West Covina
24. Vincent Avenue (NS) at Puente Avenue (EW)	West Covina
25. Vincent Avenue (NS) at Rowland Avenue (EW)	West Covina
26. Vincent Avenue (NS) at Workman Avenue (EW)	West Covina
27. Vincent Avenue (NS) at I-10 WB Ramps (EW)	Caltrans
28. Vincent Avenue (NS) at I-10 EB Ramps (EW)	Caltrans
29. Vernon Avenue/Lake Ellen Avenue (NS) at Gladstone Street (EW)	Azusa/County
30. Azusa Avenue (NS) at I-210 EB Ramps (EW)	Caltrans
31. Azusa Avenue (NS) at Paramount Street (EW)	Azusa
32. Azusa Avenue (NS) at Gladstone Street (EW)	Azusa/County
33. Azusa Avenue/San Gabriel Avenue (NS) at 1st Street (EW)	Azusa
34. Alameda Avenue/I-210 WB Ramps (NS) at 1st Street (EW)	Azusa/Caltrans

The study intersections are analyzed in accordance with the methodologies and significance criteria required by the respective jurisdictions.

ANALYSIS SCENARIOS

In accordance with City of Irwindale requirements, the following scenarios are analyzed:

- Existing
- Existing Plus Project
- Future Baseline Without Project
- Future Baseline Plus Project
- Future Baseline Plus Cumulative Projects Without Project
- Future Baseline Plus Cumulative Projects With Project

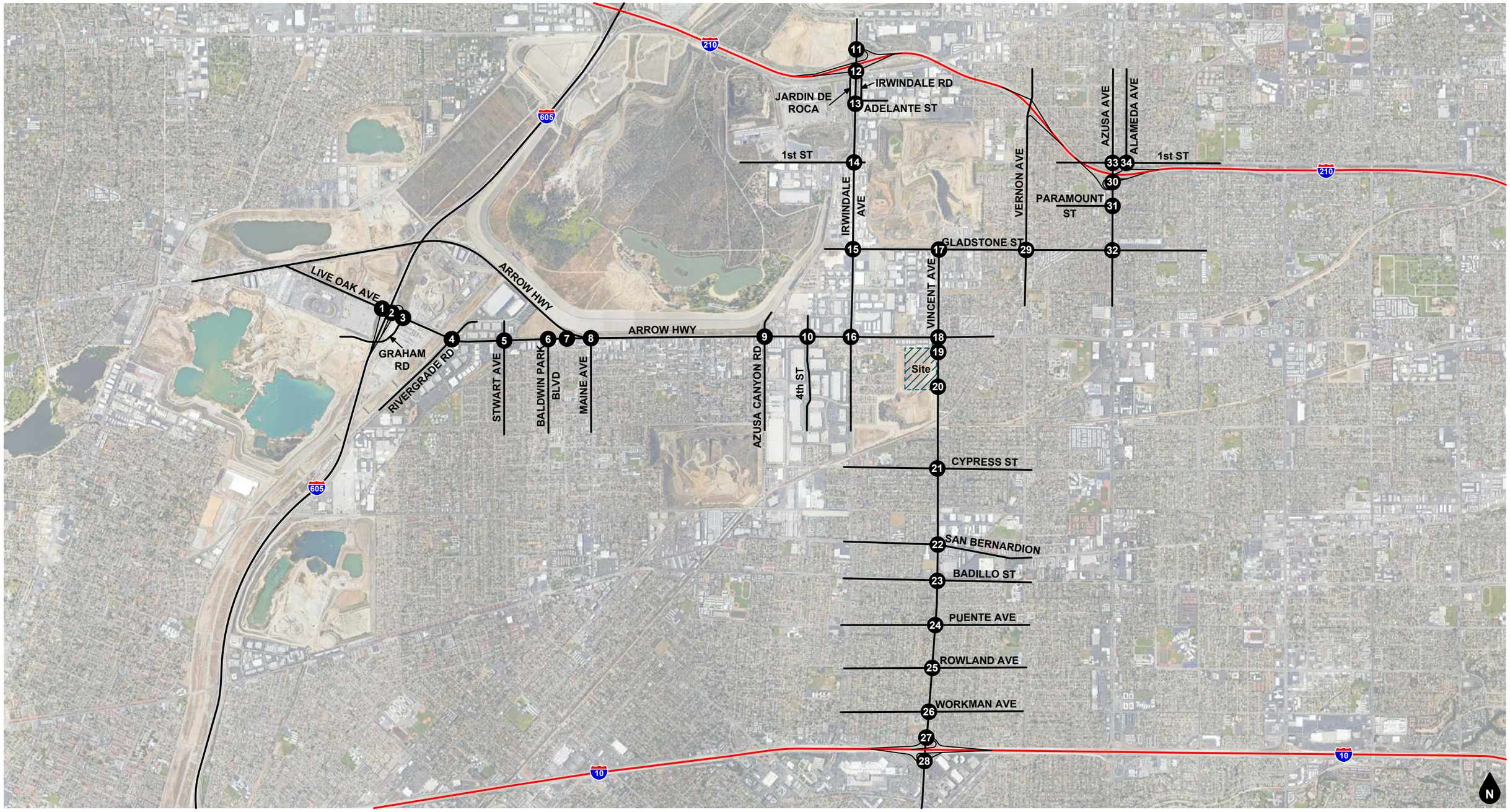

Legend

(#) Study Intersection

Figure 1
Project Location Map

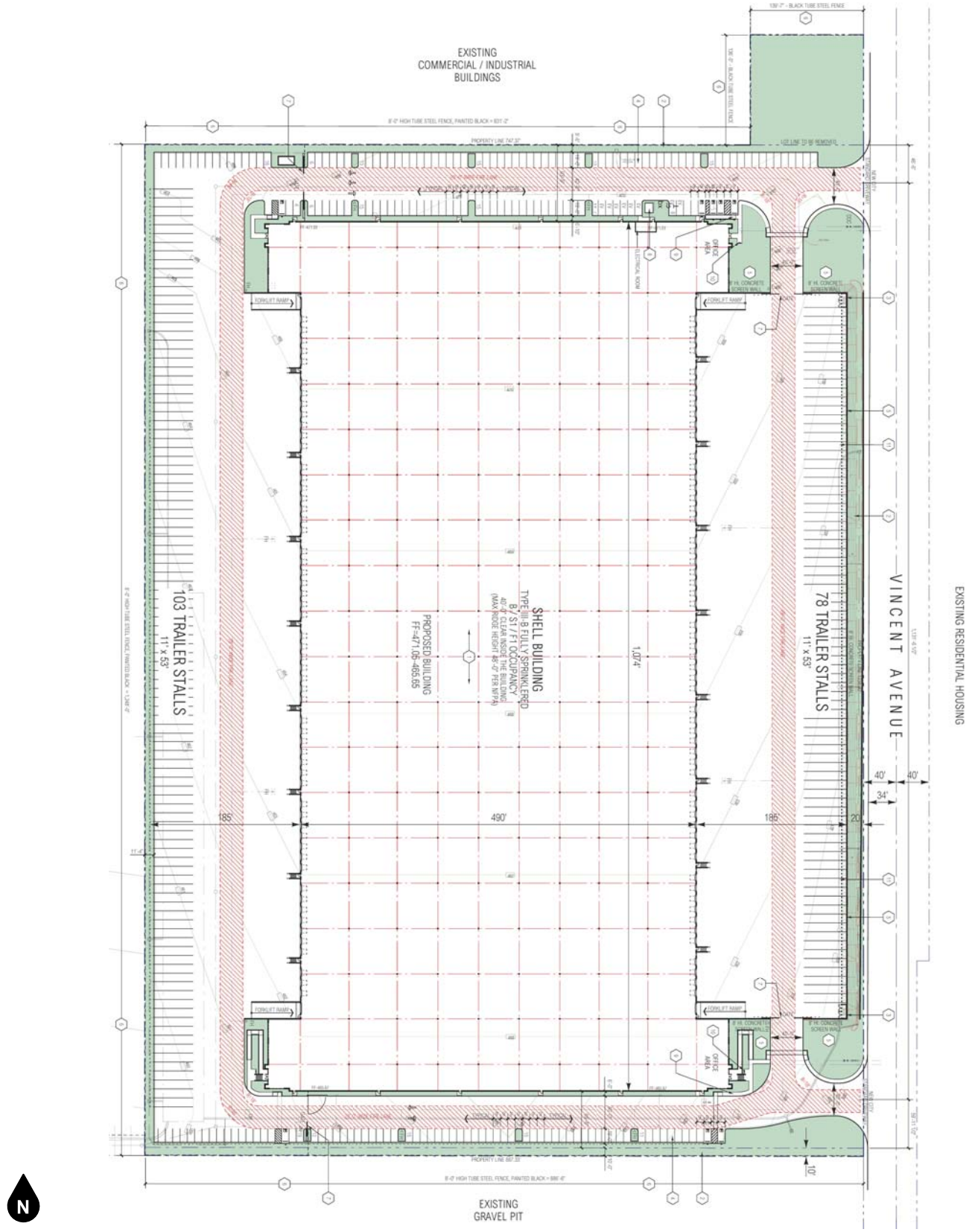

Figure 2
Site Plan

2. METHODOLOGY

This section describes the analysis methodologies used to assess transportation facility performance as adopted by the respective jurisdictional agencies.

LEVEL OF SERVICE/GENERAL PLAN CONFORMANCE ANALYSIS (NON-CEQA)

Level of Service analysis is performed for assessing General Plan operational compliance. In accordance with CEQA provisions, any Level of Service impacts identified are solely for General Plan compliance and would not constitute a significant impact under CEQA.

Intersection Capacity Utilization Methodology

Analysis of signalized intersections within the City of Irwindale is based on the Intersection Capacity Utilization (ICU) methodology. The ICU methodology compares the traffic volume using the intersection to the capacity of the intersection. The resulting volume-to-capacity ratio represents that portion of the hour required to provide sufficient capacity to accommodate all intersection traffic if all approaches operate at capacity.

The volume-to-capacity ratio is then correlated to a performance measure known as Level of Service based on the following thresholds:

Level of Service	Volume/Capacity Ratio
A	≤ 0.600
B	0.601 to 0.700
C	0.701 to 0.800
D	0.801 to 0.900
E	0.901 to 1.000
F	> 1.000

Source: Transportation Research Board, Interim Materials on Highway Capacity, Transportation Research Circular No. 212, January 1980.

Level of Service is used to qualitatively describe the performance of a roadway facility, ranging from Level of Service A (free-flow conditions) to Level of Service F (extreme congestion and system failure). ICU analysis was performed using the Vistro (Version 6.00-00) software.

Based on City of Irwindale guidelines[2], the ICU analysis utilizes the following parameters: 1,600 vehicles per hour per lane for through and turn lanes, 2,880 vehicles per hour for dual left-turn lanes, and a total clearance adjustment of 10 percent (i.e., 0.10 added to critical Volume/Capacity).

If the paved lane width of a shared through/right turn lane is wide enough to permit a separate right turn, it is common practice for a right turn lane to be considered "de facto." To function as a de facto right turn lane there must be sufficient width for right turning vehicles to travel outside the through lane. This analysis uses a minimum lane width of 19 feet from curb to lane stripe, but in most cases the lane was 20 feet or greater. Additionally, a de facto right turn lane was only considered where on-street parking is prohibited near the intersection approach.

[2] City of Irwindale Policy Guidelines for Traffic Impact Reports; December 30, 2014.

INTERSECTION DELAY METHODOLOGY

The technique used to assess the performance of unsignalized intersections and intersections within the City of Irwindale and California Department of Transportation jurisdictions is known as the intersection delay methodology based on the procedures contained in the Highway Capacity Manual. The methodology compares the traffic volume using the intersection to the capacity of the intersection to calculate the delay associated with the traffic control at the intersection. The intersection delay is then correlated to a performance measure known as Level of Service based on the following thresholds:

Level of Service	Intersection Control Delay (Seconds / Vehicle)	
	Signalized Intersection	Unsignalized Intersection
A	≤ 10.0	≤ 10.0
B	> 10.0 to ≤ 20.0	> 10.0 to ≤ 15.0
C	> 20.0 to ≤ 35.0	> 15.0 to ≤ 25.0
D	> 35.0 to ≤ 55.0	> 25.0 to ≤ 35.0
E	> 55.0 to ≤ 80.0	> 35.0 to ≤ 50.0
F	> 80.0	> 50.0

Source: Transportation Research Board, Highway Capacity Manual (6th Edition).

Level of Service is used to qualitatively describe the performance of a roadway facility, ranging from Level of Service A (free-flow conditions) to Level of Service F (extreme congestion and system failure). Intersection delay analysis was performed using the Vistro (Version 6.00-00) software.

The Level of Service analysis for signalized intersections has been performed using optimized signal timing. This analysis has included an assumed lost time of two seconds per phase. Traffic signal timing optimization has considered pedestrian safety and signal coordination requirements. Appropriate time for pedestrian crossings has also been considered in the signalized intersection analysis. The following formula has been used to calculate the pedestrian minimum times for all Highway Capacity Manual runs:

(Curb to curb distance) / (3.5 feet/second) + 7 seconds.

In accordance with the City of Irwindale, the intersection analysis uses optimized signal timing, two seconds of lost time per phase, and 1,900 vehicles per hour of green per lane. State Highway intersections are analyzed based on measured existing peak hour factors, coordinated signal timing between freeway ramp intersections, and default saturation flow rates.

The peak hour intersection turning movement volumes have been adjusted to peak 15-minute volumes for analysis purposes using the existing observed peak 15 minute to peak hour factors for all scenarios analyzed. Where feasible improvements in accordance with the local jurisdiction's General Plan and which result in acceptable operations cannot be identified, the General Plan Buildout (Year 2040) peak hour factor has been adjusted upwards to 0.95. This is to account for the effects of congestion on peak spreading. Peak spreading refers to the tendency of traffic volumes to spread more evenly across time as congestion increases.

Performance Standards

City of Irwindale. The City of Irwindale General Plan has established Level of Service D as the minimum acceptable peak hour intersection Level of Service for intersections in the City of Irwindale. The acceptable Level of Service at State Highway facilities is E in accordance with County of Los Angeles Congestion Management Plan.

City of Azusa. The City of Azusa General Plan has established Level of Service D as the minimum acceptable peak hour intersection Level of Service for intersections in the City of Azusa.

City of Covina. The City of Covina General Plan has established Level of Service D as the minimum acceptable peak hour intersection Level of Service for intersections in the City of Covina.

City of West Covina. The City of West Covina General Plan has established Level of Service D as the minimum acceptable peak hour intersection Level of Service for intersections in the City of West Covina.
County of Los Angeles. The County of Los Angeles General Plan states that the acceptable Level of Service is determined on a case-by-case basis, but Level of Service D is generally the desired minimum acceptable Level of Service.

California Department of Transportation. As stated in the Guide for the Preparation of Traffic Impact Studies (State of California, 2002), "Caltrans endeavors to maintain a target LOS [Level of Service] at the transition between LOS "C" and LOS "D" on State highway facilities". The California Department of Transportation acknowledges this may not always be feasible and recommends consultation with the California Department of Transportation to determine the appropriate target Level of Service. For consistency with the County of Los Angeles Congestion Management Plan criteria used for freeway mainline sections and freeway ramps local requirements, this analysis defines Level of Service E as the minimum acceptable Level of Service for State Highway facilities.

Requirements for Improvements

City of Irwindale: The City of Irwindale General Plan identifies the following criteria:

- When a signalized intersection operates at Level of Service D or better under existing or future baseline conditions and the addition of the project trips degrades the intersection operations to Level of Service E or F. The project mitigation should bring the facility to operate at Level of Service D at minimum.
- When a signalized intersection operates at Level of Service E or better under existing or future baseline conditions and the addition of project trips degrades the intersection operations to Level of Service F or increases the V/C by 0.02 or greater, the project mitigation should bring the facility to operate at Level of Service E at minimum.
- When a signalized intersection operates at Level of Service F under existing or future baseline conditions and the addition of more than 50 peak hour project trips contributes to the continuing operational failure at the intersection or increases the V/C by 0.02 or greater. The project mitigation should bring the facility to pre-project conditions, which typically are defined as existing conditions.
- At an unsignalized intersection, when the minor stop-controlled approach operates at Level of Service F and does not have acceptable operation in terms of total control delay, and the addition of project trips increases the total control delay to more than 4.0 vehicle hours for a single lane approach or 5.0 vehicle hours for a multilane approach. The project mitigation should bring the facility to operate at Level of Service E minimum or to bring the total control delay to less than 4.0 vehicle hours for a single lane approach or 5.0 vehicle hours for a multilane approach at a minimum.
- At an unsignalized intersection, when the minor stop-controlled approach operates at Level of Service F and does not have an acceptable operation in terms of total control delay, and the addition of more than 50 peak hour project trips contributes to the continuing operational failure at the minor approach. The project mitigation should bring the facility to pre-project or existing conditions.

County of Los Angeles: For intersections located outside the City of Irwindale, the criteria from the Los Angeles County Traffic Impact Analysis Report Guidelines (Public Works Department, January 1997) were used. According to these criteria, a project traffic impact is considered significant if the project related increase in the volume to capacity ratio equals or exceeds the thresholds shown below:

Pre-Project Conditions		Project-Related Volume/Capacity Increase
Level of Service	Volume to Capacity	
C	0.71 - 0.80	0.04 or more
D	0.81 - 0.90	0.02 or more
E/F	0.91 - more	0.01 or more

If a project is forecast to cause a significant traffic impact, feasible mitigation measures that will reduce the impact to a less than significant level are identified. Mitigation measures can be in many forms, including the addition of lanes, traffic control modification, or demand management measures. If no feasible mitigation measures can be identified for a significantly impacted facility, the impact will remain significant and unavoidable and a statement of overriding considerations is required.

VEHICLE MILES TRAVELED ANALYSIS (CEQA)

The methodology used to evaluate the impact of land use and transportation projects under CEQA is known as Vehicle Miles Traveled (VMT). In general terms, VMT quantifies the amount and distance of automobile travel attributable to a project or region. Additional information and a project assessment is provided in the Vehicle Miles Traveled section presented later in this report.

3. EXISTING CONDITIONS

EXISTING ROADWAY SYSTEM

Figure 3 identifies the Existing number of through lanes and intersection controls based on a field survey of the study area.

Regional access to the project area is provided by the I-605 Freeway to the west, I-10 Freeway to the south, and the I-210 Freeway to the north. Key north-south roadways providing local access include Irwindale Avenue, Vincent Avenue, and Lark Ellen Avenue. Key east-west roadways providing local access include Gladstone Street, Arrow Highway, and Cypress Street.

EXISTING TRAFFIC VOLUMES

Existing peak hour intersection turning movement volumes are based upon morning peak period and evening peak period intersection turning movement counts obtained in May/August/November 2017, May/June 2018 and January 2019 during typical weekday conditions. The morning peak period was counted between 7:00 AM and 9:00 AM and the evening peak period was counted between 4:00 PM and 6:00 PM. The actual peak hour within the peak period is the four consecutive 15-minute periods with the highest total volume when all movements are added together. Thus, the weekday evening peak hour at one intersection may be 4:45 PM to 5:45 PM if those four consecutive 15-minute periods have the highest combined volume. Intersection turning movement count worksheets are provided in Appendix B.

Figure 4 and Figure 5 show the Existing morning peak hour and evening peak hour intersection turning movement volumes, respectively.

EXISTING INTERSECTION CAPACITY UTILIZATION/LEVEL OF SERVICE

The study intersection Levels of Service for existing traffic conditions have been calculated and are shown in Table 1. Existing Level of Service worksheets are provided in Appendix C.

As shown in Table 1, the study intersections currently operate within acceptable Levels of Service during the peak hours for Existing traffic conditions, except for the following study intersections that currently operate at unacceptable Levels of Service (E or F) during the peak hours:

- I-605 Freeway NB Ramps/Live Oak Avenue - #2 (morning/evening peak hours)
- Azusa Canyon Road/Arrow Highway - #9 (morning/evening peak hours)

CITY OF IRWINDALE GENERAL PLAN CIRCULATION ELEMENT

Figure 6 shows the City of Irwindale General Plan Circulation Element. This figure shows the nature and extent of arterial highways that are needed to adequately serve the ultimate development depicted by the Land Use Element of the General Plan.

CITY OF IRWINDALE TRUCK ROUTES

Figure 7 identifies the designated truck routes in the City of Irwindale.

EXISTING PEDESTRIAN AND BICYCLE ROUTES

Existing pedestrian facilities in the vicinity of the project site are shown on Figure 8. Figure 9 shows the City of Irwindale Bicycle route map. There are Buffered Bike Lanes/Separated Bikeways (Class II/IV) recommended along Live Oak Avenue, Arrow Highway, Azusa Canyon Road, and Irwindale Avenue in the project vicinity.

TRANSIT FACILITIES

Figure 10 shows existing transit service within the City of Irwindale. The study area is served by the Foothill Transit and Baldwin Park Transit. As shown on Figure 10, Foothill Transit Routes 185/272/492 and the Baldwin Park Teal Line provide transit service along parts of Live Oak Avenue, Baldwin Park Boulevard, Arrow Highway, and Irwindale Avenue. The nearest transit stop is for Foothill Transit Route 492 located at the intersection of Vincent Avenue/Arrow Highway approximately 300 feet from the project site.

EXISTING TRAFFIC SIGNAL WARRANT ANALYSIS

A traffic signal appears to currently be warranted at the following study intersection for Existing traffic conditions (see Appendix E):

- I-605 Freeway NB Ramps/Live Oak Avenue - #2

The unsignalized intersections have been evaluated for a traffic signal using the California Department of Transportation Warrant 3 Peak Hour traffic signal warrant analysis, as specified in the California Manual of Uniform Traffic Control Devices (2014).

Table 1
Existing Intersection Levels of Service

ID	Study Intersection	Traffic Control[1]	AM Peak Hour V/C[2] or [Delay][3]	AM Peak Hour LOS[4]	PM Peak Hour V/C[2] or [Delay][3]	PM Peak Hour LOS[4]
1.	I-605 SB On-Ramp at Live Oak Ave	TS	0.513	A	0.776	C
2.	I-605 NB On-Ramp at Live Oak Ave	CSS	[67.9]	F	[138.6]	F
3.	Graham Rd at Live Oak Ave	TS	0.565	A	0.565	A
4.	Rivergrade Rd at Live Oak Ave	TS	0.581	A	0.877	D
5.	Stewart Ave at Live Oak Ave	TS	0.804	D	0.758	C
6.	Baldwin Park Blvd at Live Oak Ave	TS	0.595	A	0.734	C
7.	Arrow Hwy at Live Oak Ave	TS	0.622	B	0.888	D
8.	Maine Ave at Arrow Hwy	TS	0.787	C	0.807	D
9.	Azusa Canyon Rd at Arrow Hwy	TS	0.921	E	0.897	D
10.	4th St at Arrow Hwy	TS	0.343	A	0.551	A
11.	Irwindale Ave at I-210 WB Ramps	TS	0.459	A	0.536	A
12.	Irwindale Ave at I-210 EB Ramps	TS	0.665	B	0.741	C
13.	Irwindale Ave at Jardin De Roca/Irwindale Rd	TS	0.565	A	0.692	B
14.	Irwindale Ave at 1st St	TS	0.503	A	0.444	A
15.	Irwindale Ave at Gladstone St	TS	0.644	B	0.646	B
16.	Irwindale Ave at Arrow Hwy	TS	0.840	D	0.754	C
17.	Vincent Ave at Gladstone St	TS	0.521	A	0.836	D
18.	Vincent Ave at Arrow Hwy	TS	0.676	B	0.776	C
21.	Vincent Ave at Cypress St	TS	0.641	B	0.720	C
22.	Vincent Ave at San Bernardino Rd	TS	0.650	B	0.652	B
23.	Vincent Ave at Badillo St	TS	0.607	B	0.757	C
24.	Vincent Ave at Puente Ave	TS	0.576	A	0.628	B
25.	Vincent Ave at Rowland Ave	TS	0.535	A	0.604	B
26.	Vincent Ave at Workman Ave	TS	0.609	B	0.685	B
27.	Vincent Ave at I-10 WB Ramps	TS	0.433	A	0.447	A
28.	Vincent Ave at I-10 EB Ramps	TS	0.482	A	0.536	A
29.	Vernon Ave/Lake Ellen Ave at Gladstone St	TS	0.681	B	0.726	C
30.	Azusa Ave at I-210 EB Ramps	TS	0.659	B	0.654	B
31.	Azusa Ave at Paramount St	TS	0.587	A	0.631	B
32.	Azusa Ave at Gladstone St	TS	0.726	C	0.730	C
33.	Azusa Ave/San Gabriel Ave at 1st St	TS	0.663	B	0.658	B
34.	Alameda Ave/I-210 WB Ramps at 1st St	TS	0.896	D	0.687	B

Notes:

(1) TS = Traffic Signal; CSS = Cross Street Stop; AWS = All Way Stop

(2) V/C = Volume/Capacity

(3) Delay is shown in [seconds/vehicle]. Delay is reported for un-signalized study intersections. For intersections with cross street stop control, LOS is based on average delay of the worst individual lane (or movements sharing a lane).

(4) LOS = Level of Service

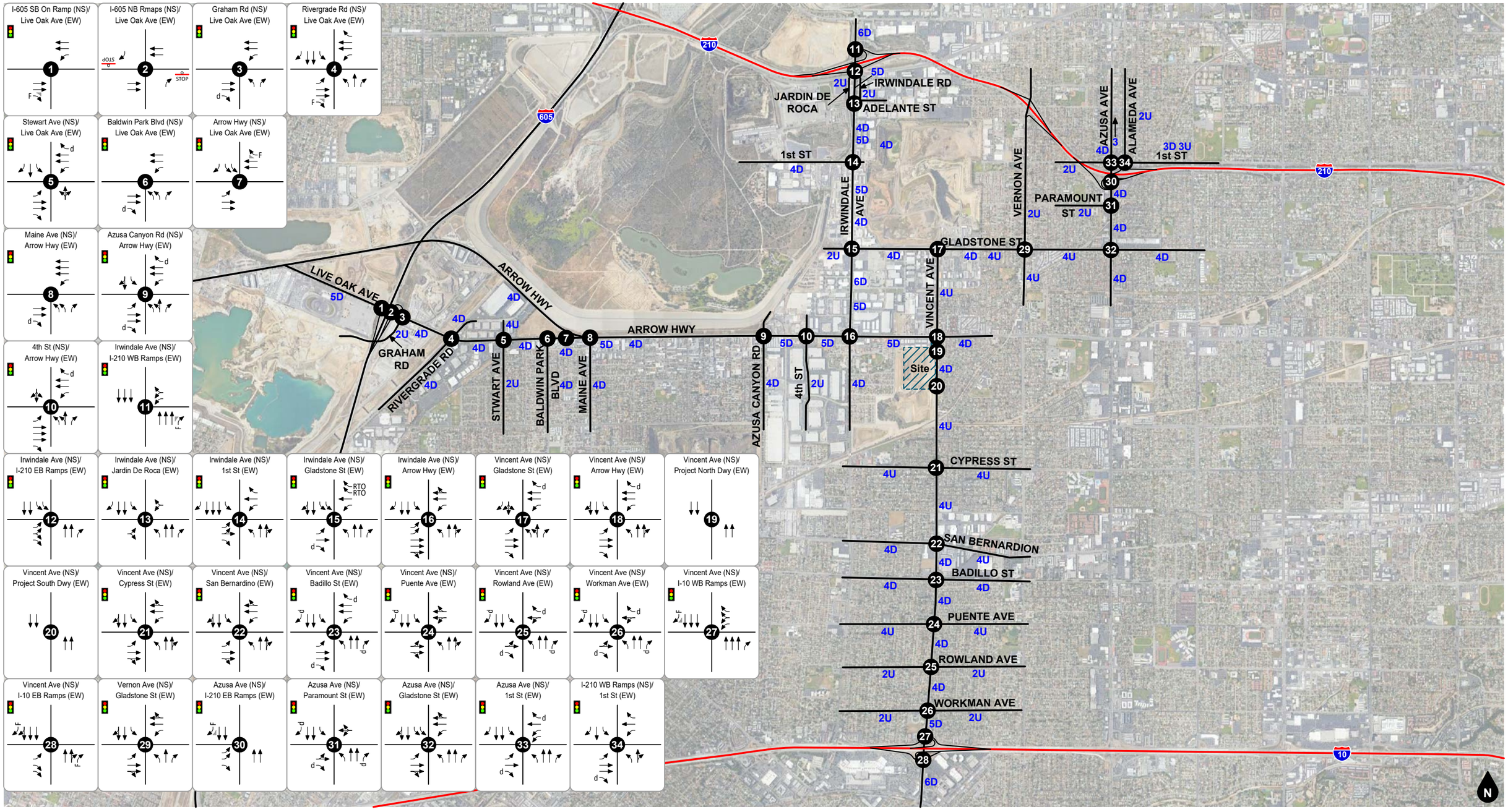

Legend

Traffic Signal		Existing Lane	
Stop Sign		RTO	Right Turn Overlap
#D	#-Lane Divided Roadway	F	Free Right Turn Lane
#U	#-Lane Undivided Roadway	d	De Facto Right Turn Lane

Figure 3
Existing Lane Geometry and Intersection Traffic Controls

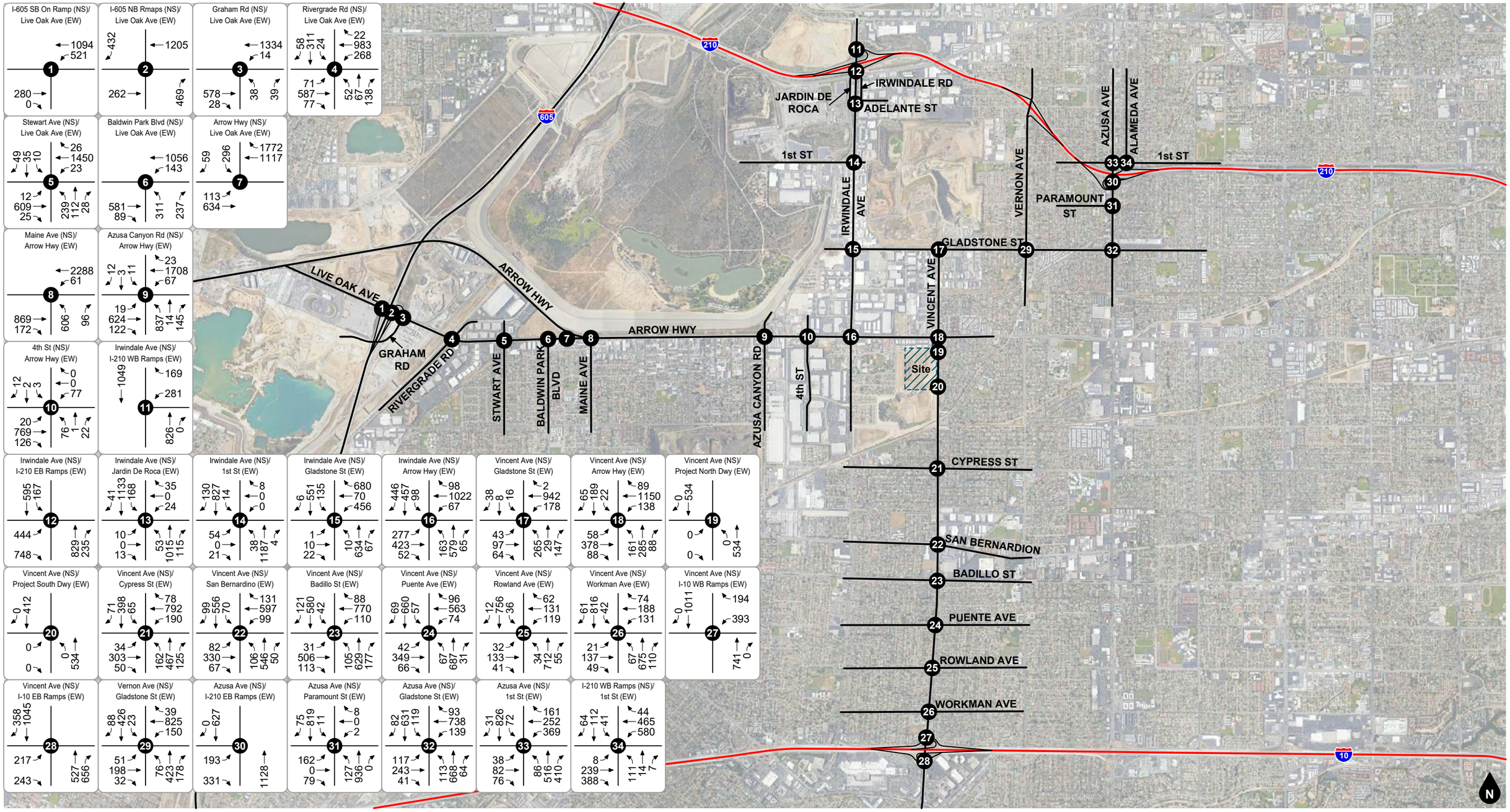

Legend

(#) Study Intersection

Figure 4
Existing AM Peak Hour Intersection Turning Movement Volumes

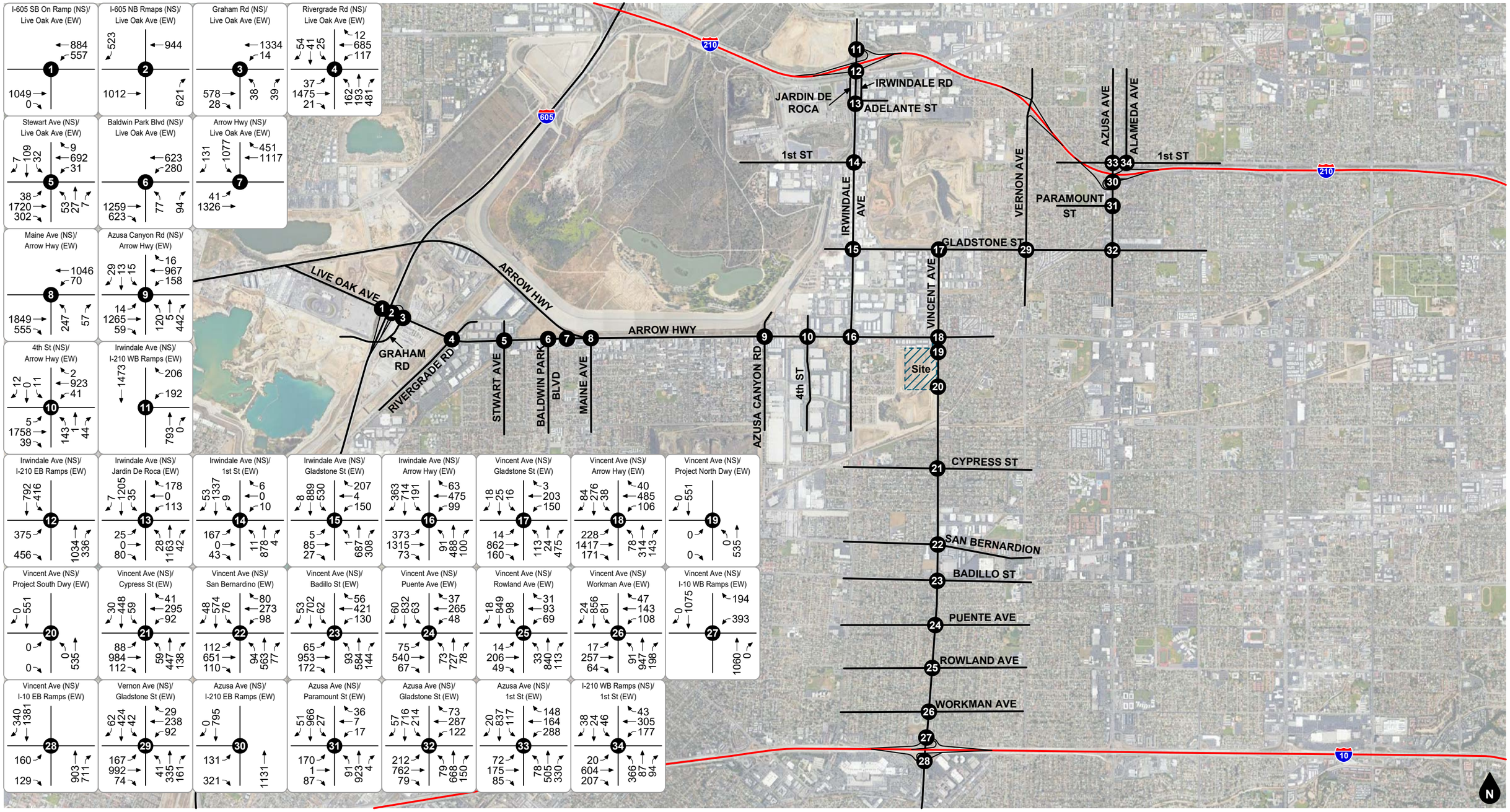

Legend

Study Intersection

Figure 5
Existing PM Peak Hour Intersection Turning Movement Volumes

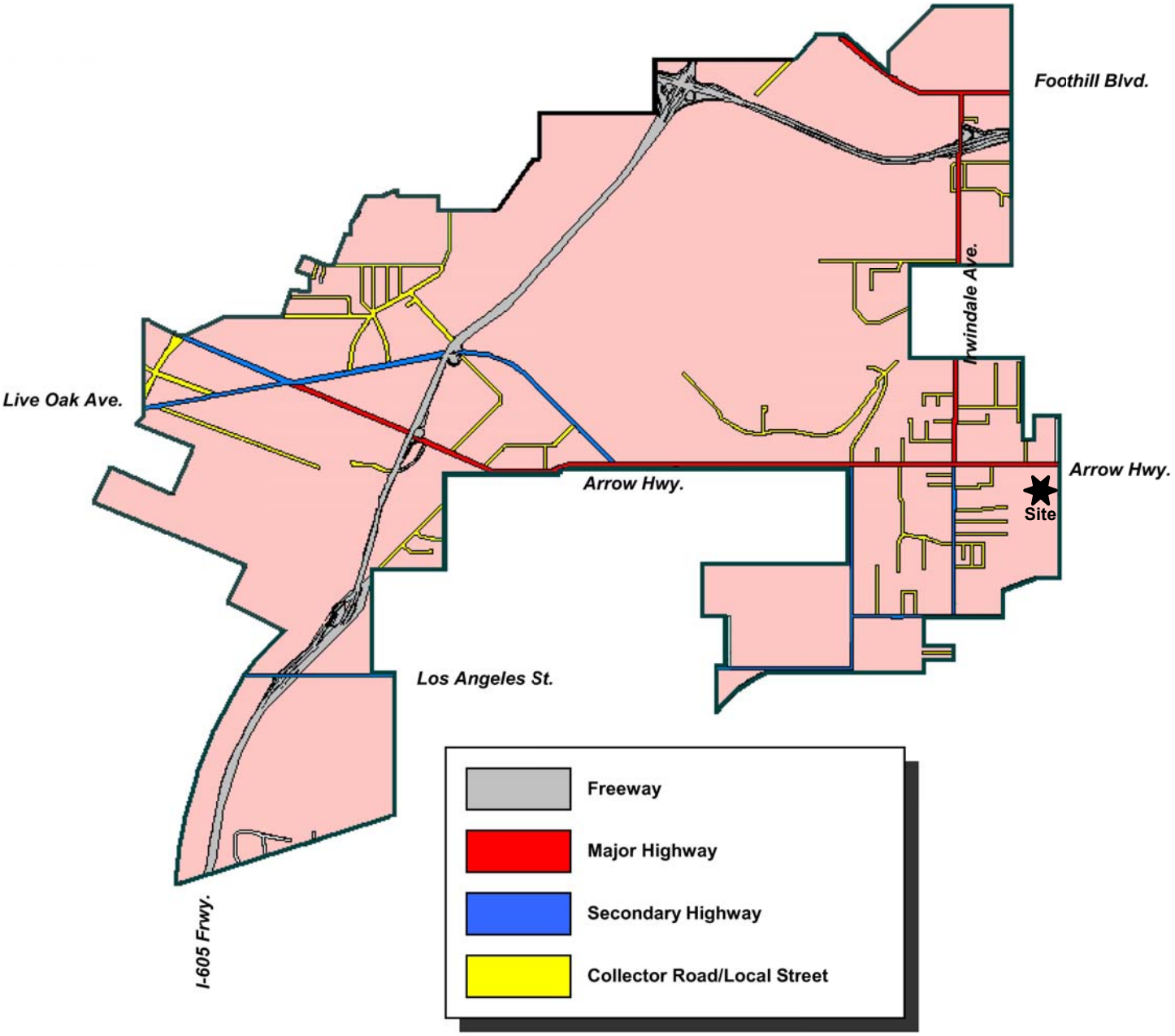

Figure 6
City of Irwindale General Plan Circulation Element

Source: City of Irwindale

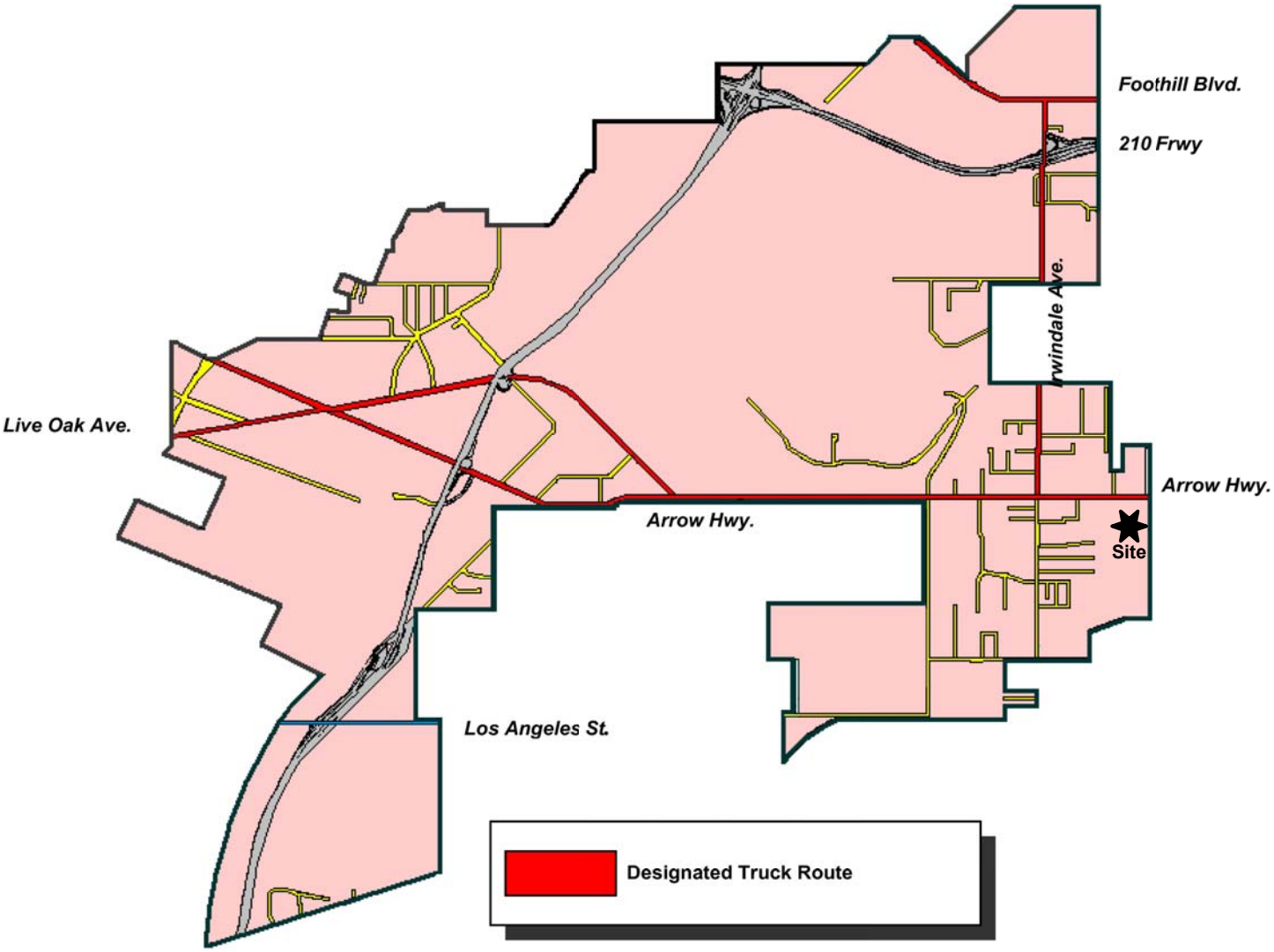

Figure 7
City of Irwindale General Plan Truck Routes

Source: City of Irwindale

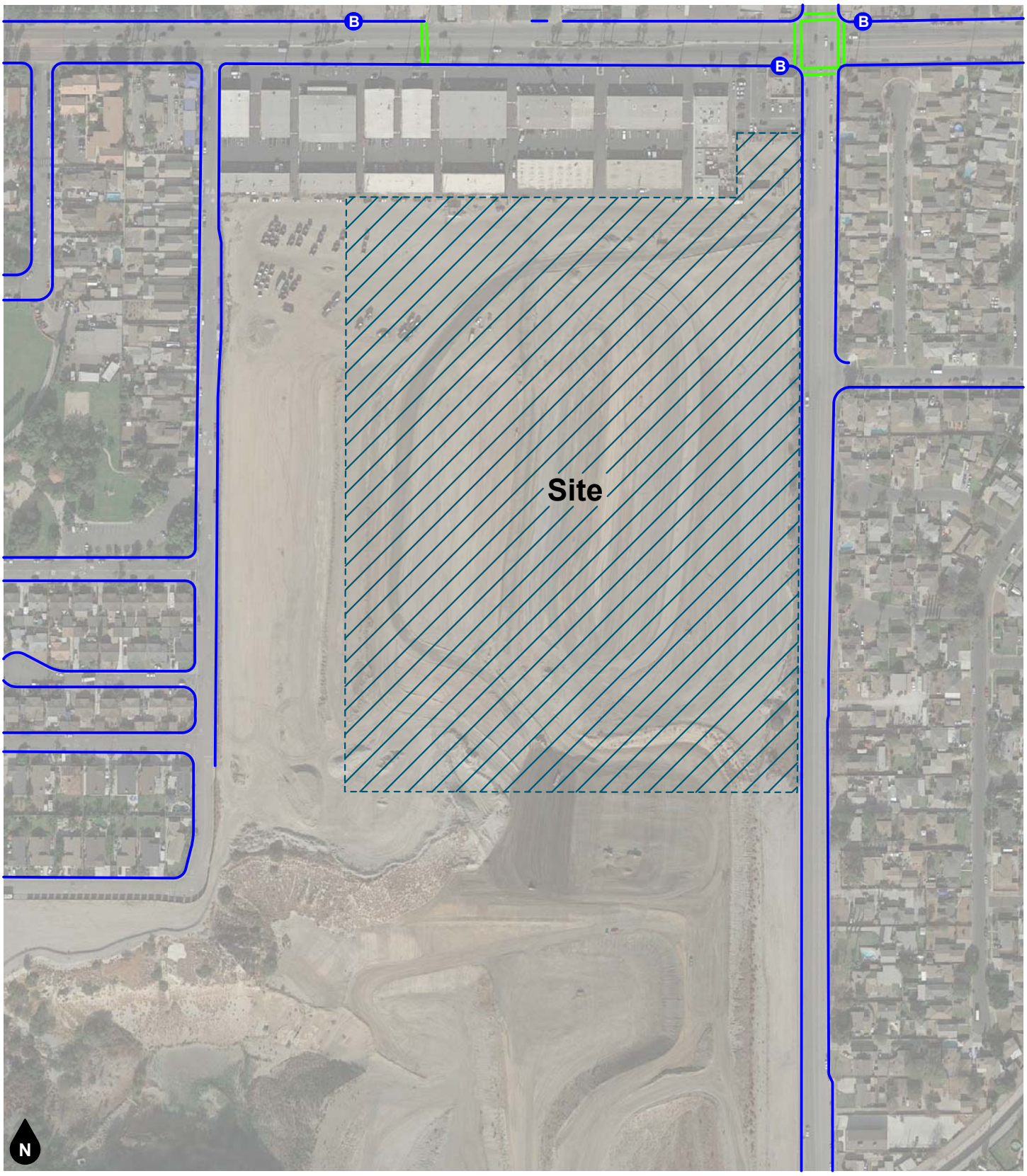

Legend
- Sidewalk
- Cross Walk
- B Bus Stop

Figure 8
Existing Pedestrian Facilities

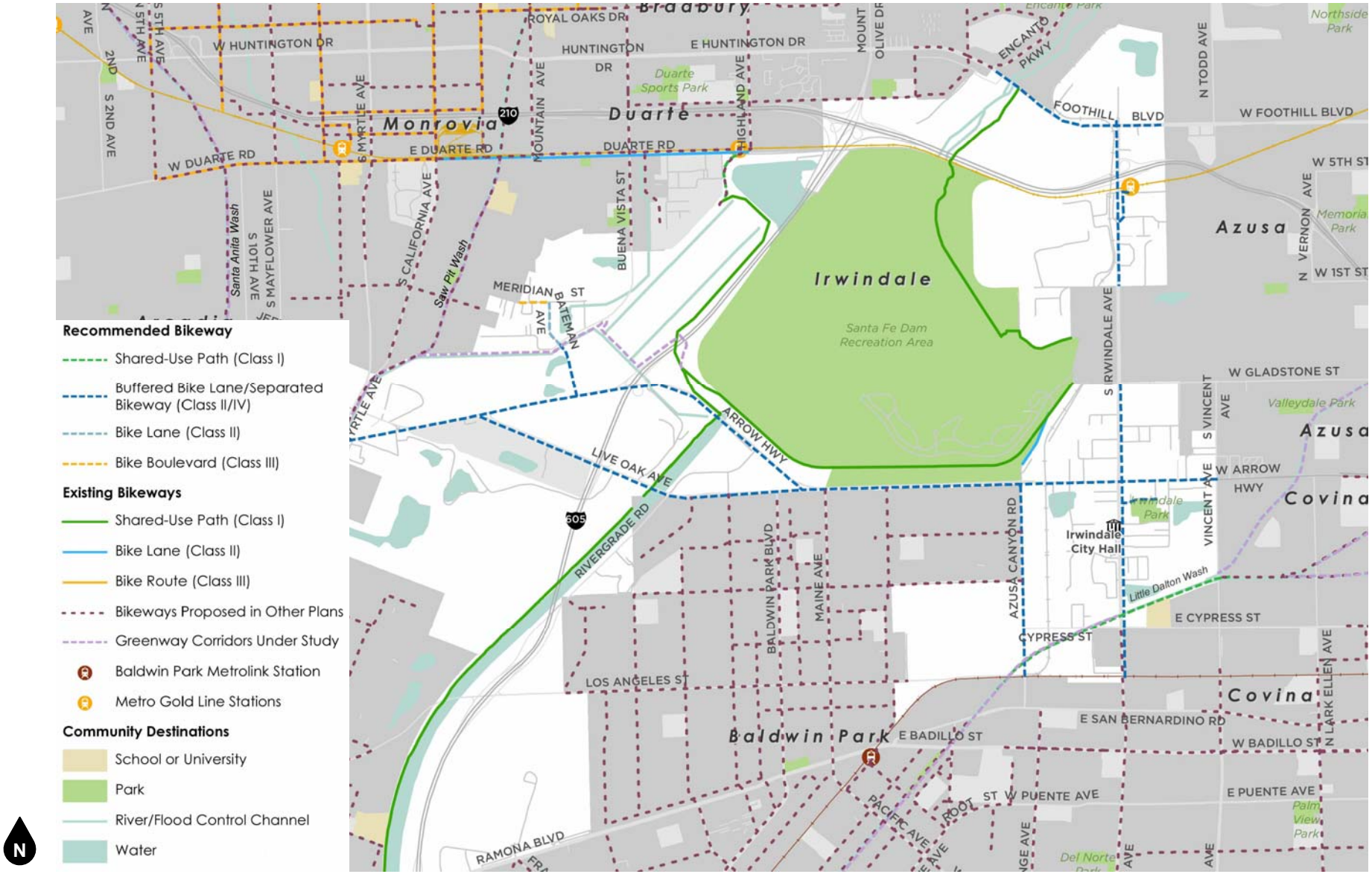

Figure 9
City of Irwindale Bicycle Master Plan

Source: City of Irwindale

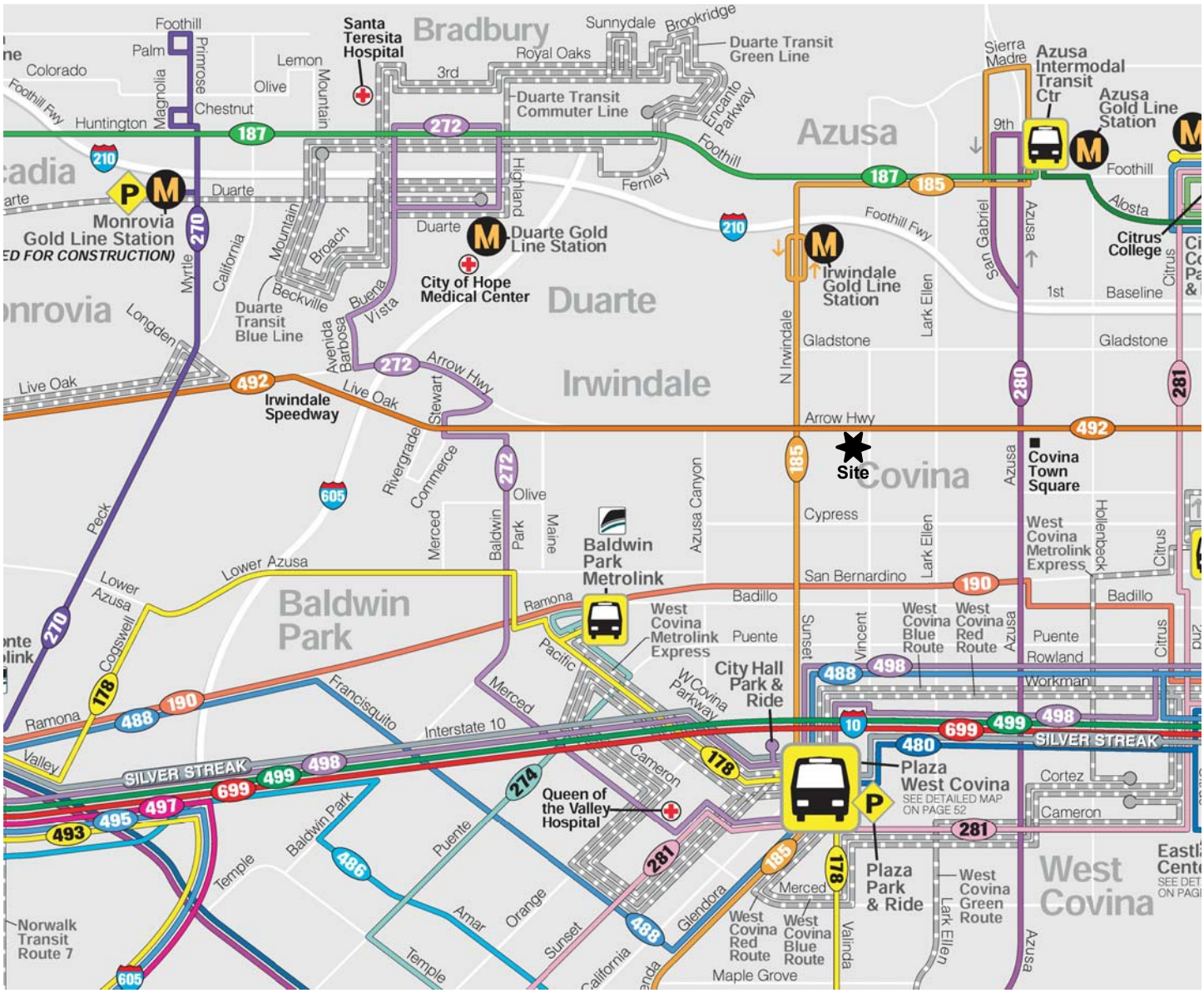
Bradbury
Azusa
Duarte
Irwindale
Covina
Baldwin Park
West Covina
Site
Santa Teresita Hospital
Duarte Transit Green Line
Duarte Transit Commuter Line
Azusa Intermodal Transit Ctr
Azusa Gold Line Station
Monrovia Gold Line Station
Duarte Gold Line Station
City of Hope Medical Center
Irwindale Gold Line Station
Citrus College
Duarte Transit Blue Line
Irwindale Speedway
Covina Town Square
Baldwin Park Metrolink
West Covina Metrolink Express
City Hall Park & Ride
Queen of the Valley Hospital
Plaza West Covina
SEE DETAILED MAP ON PAGE 52
Plaza Park & Ride
West Covina Green Route
West Covina Red Route
West Covina Blue Route
West Covina Metrolink Express
Norwalk Transit Route 7
SILVER STREAK
Foothill
Arrow Hwy
Live Oak
Lower Azusa
Ramona
Interstate 10
Gladstone
Baseline
1st
9th
Cypress
San Bernardino
Badillo
Puente
Rowland
Workman
Cortez
Cameron
Merced
Maple Grove
Glendora
Valinda
Lark Ellen
Azusa
Citrus
Hollenbeck
Sunset
Vincent
Fernley
Alosta
Sierra Madre
Foothill Fwy
Duarte
Huntington
Colorado
Palm
Foothill
Primrose
Chestnut
Olive
Lemon
Mountain
Magnolia
Myrtle
California
Broach
Beckville
Buena Vista
Avenida Barbosa
Longden
Peck
Rivergrade
Commerce
Stewart
Merced
Baldwin Park
Maine
Azusa Canyon
Cogswell
Francisquito
Pacific
W Covina Parkway
Temple
Baldwin Park
Puente
Amar
Orange
Sunset
Valley
Encanto Parkway
Royal Oaks
3rd
Sunnydale
Brookridge
Highland
N Irwindale
San Gabriel
Lark Ellen
Azusa
Citrus
Maple Grove
Cameron
Merced
Temple
Valley
Ramona
Lower Azusa
Peck
Myrtle
Primrose
Magnolia
Mountain
Lemon
Olive
Chestnut
Foothill
Huntington
Colorado
Palm
Duarte
Monrovia
Arcadia
Irwindale
Duarte
Baldwin Park
Covina
West Covina
Bradbury
Azusa
Sierra Madre

4. PROJECT TRIP FORECASTS

This section describes how project trip generation, trip distribution, and trip assignment forecasts were developed. The forecast project volumes are illustrated on figures contained in this section.

PROJECT DESCRIPTION

The approximately 26-acre project site is located west of Vincent Avenue between Arrow Highway and the Little Dalton Wash Channel in the City of Irwindale. The proposed project consists of a 545,735 square foot industrial building. The project site is proposed to provide full access driveways to Vincent Avenue.

PROJECT TRIP GENERATION

The trips generated by the project are determined by multiplying an appropriate trip generation rate by the quantity of land use. Trip generation rates are predicated on the assumption that energy costs, the availability of roadway capacity, the availability of vehicles to drive, and life styles remain similar to what are known today. A major change in these variables may affect trip generation rates.

Trip generation rates were determined for daily trips, morning peak hour inbound and outbound trips, and evening peak hour inbound and outbound trips for the proposed land use. By multiplying the trip generation rates by the land use quantity, the traffic volumes are determined. Table 2 shows the project trip generation based upon rates obtained from the Institute of Transportation Engineers, Trip Generation Manual, 10th Edition, 2017 and the City of Fontana, Truck Trip Generation Study, August 2003. In addition, the project trips generated were converted into passenger car equivalents.

As shown in Table 2, the proposed project is forecast to generate approximately 3,437 daily trips in passenger car equivalents, 485 passenger car equivalent trips of which will occur during the morning peak hour and 436 passenger car equivalent trips of which will occur during the evening peak hour.

PROJECT TRIP DISTRIBUTION AND ASSIGNMENT

Figure 11 and Figure 12 show the directional distributions of the project trips. The forecast project trip distributions were determined in consultation with City staff based on review of existing traffic volume data, surrounding land uses, and the local and regional roadway facilities in the project vicinity.

Based on the identified project trip generation and distributions, morning and evening peak hour intersection turning movement volumes expected from the project are shown on Figure 13 and Figure 14, respectively.

Table 2
Project Trip Generation

Descriptor	Quantity	Units[1]	Type of Vehicle: Passenger Car	2 Axle Truck	3 Axle Truck	4+ Axle Truck	Total Trucks	Total
Land Use: Light Industrial	545.735	TSF	78.6%	8.0%	3.9%	9.5%	21.4%	100%
Trip Generation Rates[2] in trips per TSF								
Daily			3.899	0.397	0.193	0.471	1.061	4.96
Morning Peak Hour			0.550	0.056	0.027	0.067	0.150	0.70
Evening Peak Hour			0.495	0.050	0.025	0.060	0.135	0.63
Trip Generation in Vehicles								
Daily			2,128	217	106	257	580	2,708
Morning Peak Hour								
Inbound			264	27	13	32	72	336
Outbound			36	4	2	4	10	46
Total			300	31	15	36	82	382
Evening Peak Hour								
Inbound			35	4	2	4	10	45
Outbound			235	24	12	28	64	299
Total			270	28	14	32	74	344
Passenger Car Equivalent's (PCE'S) Factor[3]			1.00	1.50	2.00	3.00		
Trip Generation in PCE's								
Daily			2,128	326	212	771	1,309	3,437
Morning Peak Hour								
Inbound			264	41	26	96	163	427
Outbound			36	6	4	12	22	58
Total			300	47	30	108	185	485
Evening Peak Hour								
Inbound			35	6	4	12	22	57
Outbound			235	36	24	84	144	379
Total			270	42	28	96	166	436

Notes:

(1) TSF = Thousand Square Feet

(2) Source: Institute of Transportation Engineers, Trip Generation Manual, 10th Edition, 2017, Land Use Code 150 and City of Fontana, Truck Trip Generation Study, August 2003.

(3) Passenger Car Equivalent factors are recommended by San Bernardino Associated Governments.

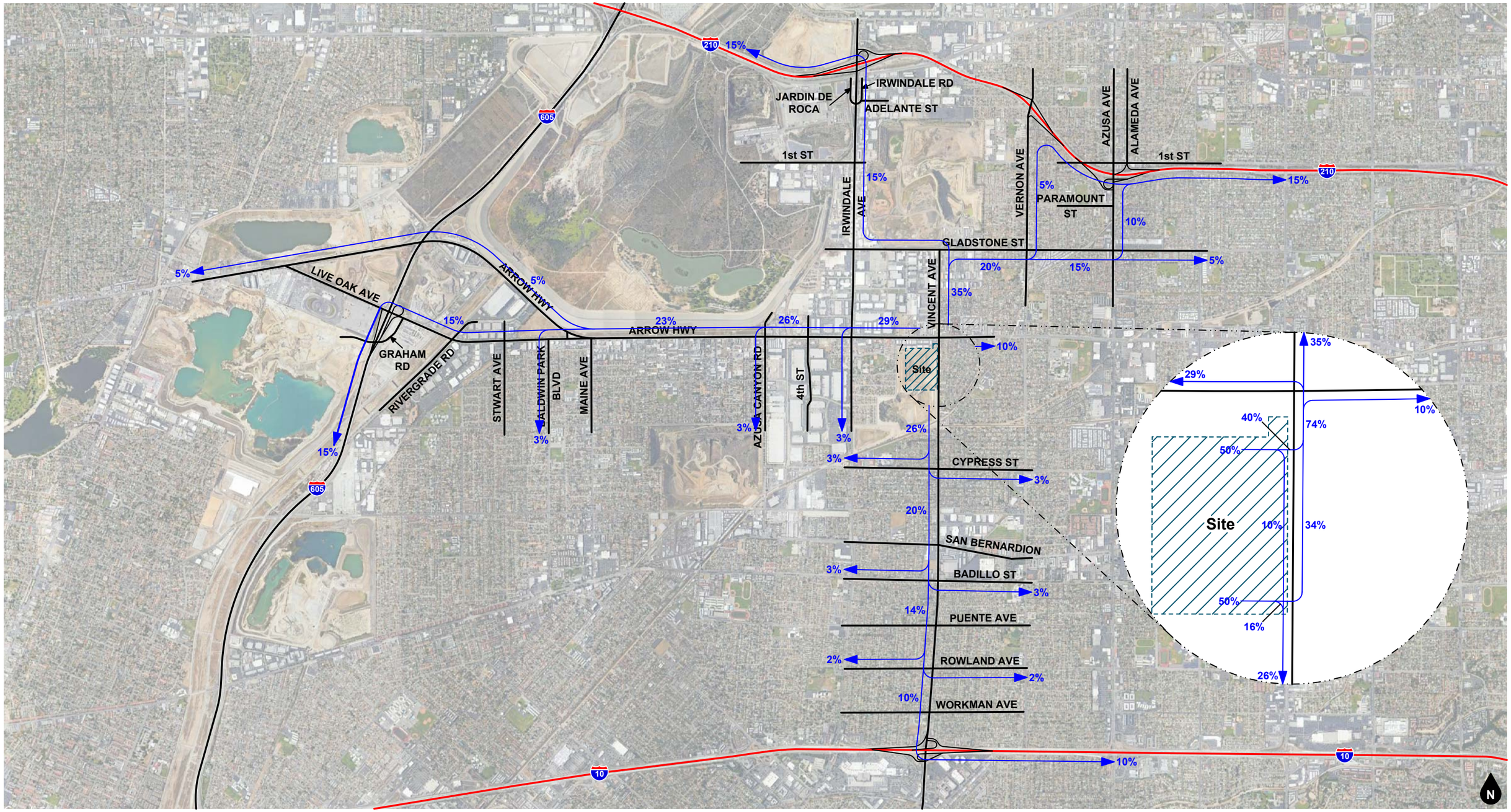

Legend

10% Percent To/From Project

Figure 11
Project Trip Distribution - Cars

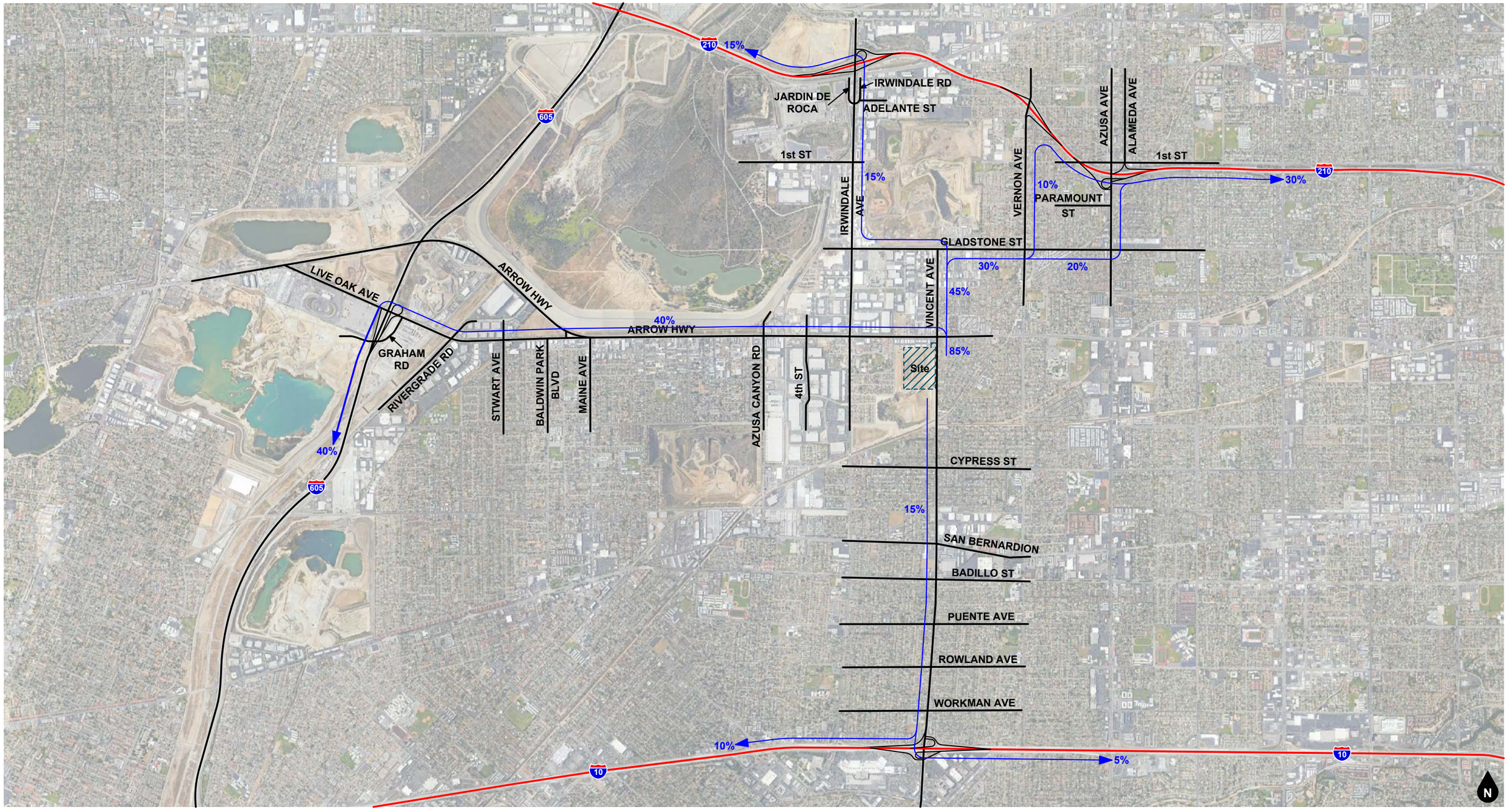

Legend

10% Percent To/From Project

Figure 12
Project Trip Distribution - Trucks

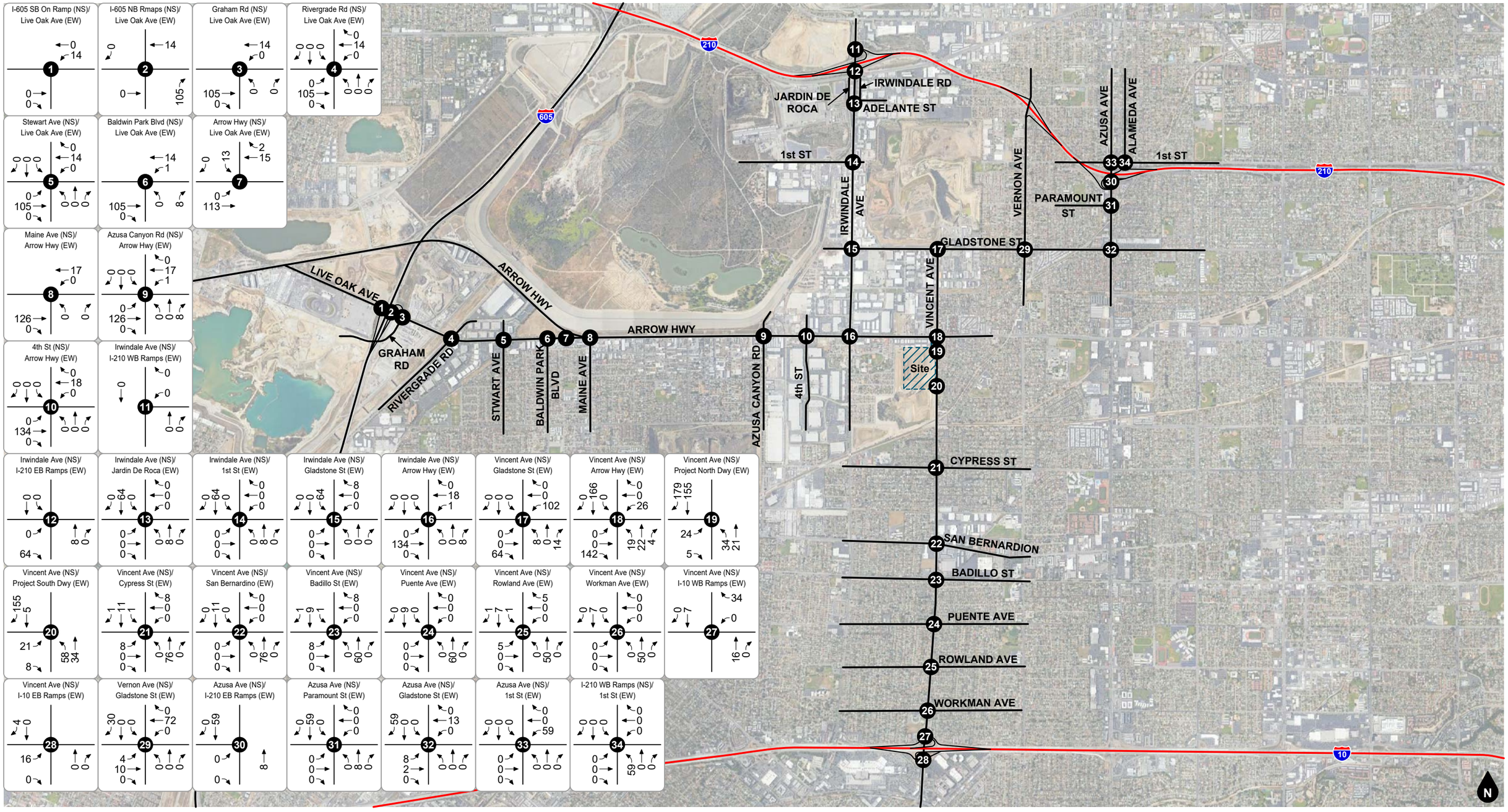

Legend

Study Intersection

Figure 13
Project AM Peak Hour Intersection Turning Movement Volumes

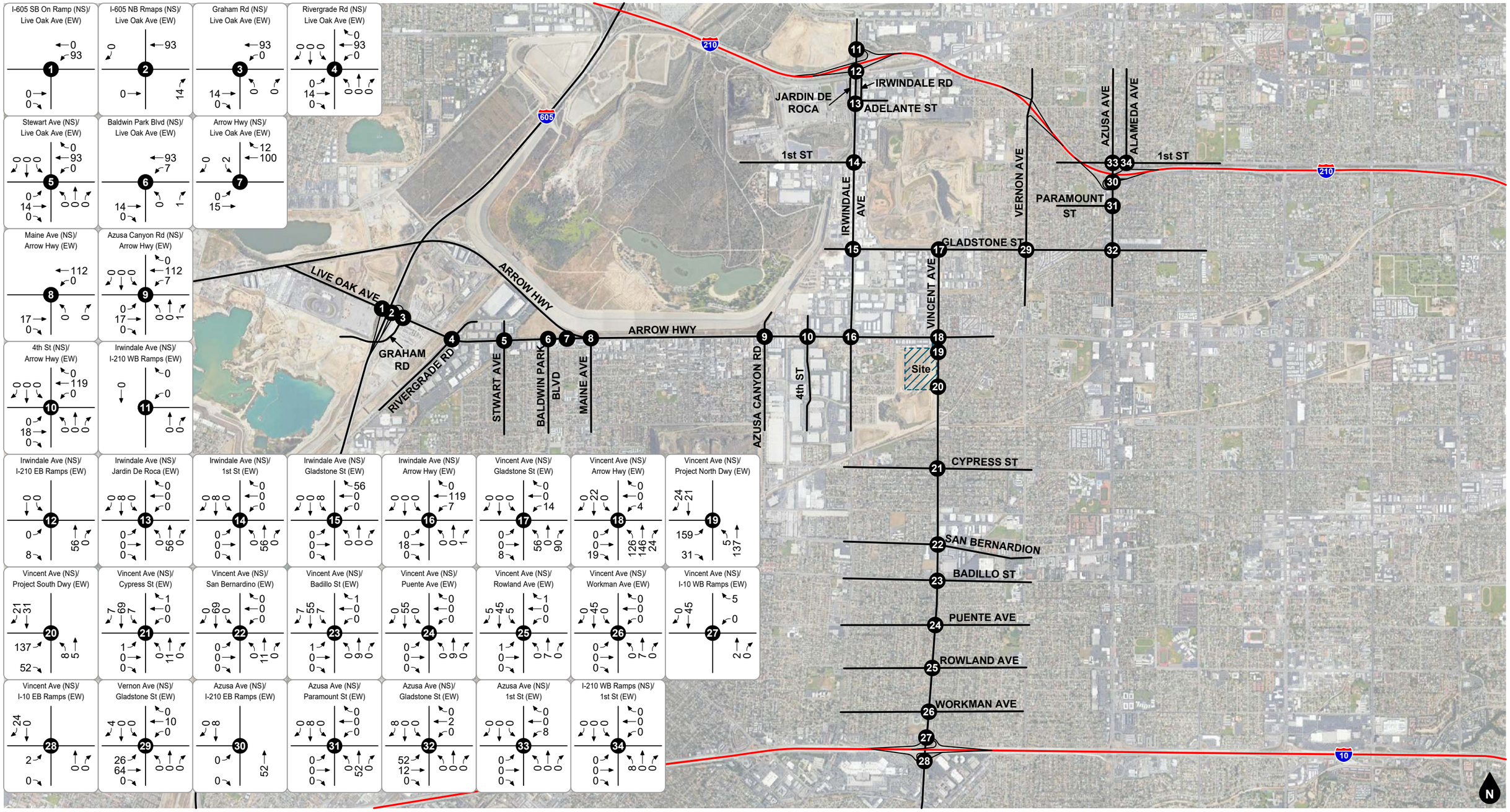

Legend

(#) Study Intersection

Figure 14
Project PM Peak Hour Intersection Turning Movement Volumes

5. FUTURE VOLUME FORECASTS

This section describes how future volume forecasts for each analysis scenario were developed. Forecast study area volumes are illustrated on figures contained in this section.

CUMULATIVE TRIPS

To assess future traffic conditions, existing traffic volumes are combined with project trips, regional ambient growth, and trips generated by other developments. Project buildout is planned to occur over a period of three to seven years. For purposes of this traffic impact analysis, the seven year buildout time frame is conservative since it would result in additional background traffic growth. Therefore, this traffic impact analysis assumes the project will be completed and generating trips at its ultimate potential by year 2020.

Ambient Growth Rate

To account for ambient traffic growth, existing traffic volumes were increased by 2 percent per year over a two year period based on traffic growth factors contained in the Los Angeles County 2010 Congestion Management Program (Exhibit D-1, RSA 26).

Other Development

Other cumulative projects (see Appendix D) with the potential to add trips to the study area were identified. Trips associated with other cumulative projects in the study area were assigned to the study intersections as appropriate. The trip generation forecasts for other cumulative projects are included in Table 3. The other cumulative projects location map is shown on Figure 15.

ANALYSIS SCENARIO VOLUME FORECASTS

Existing Plus Project

The traffic volumes for Existing Plus Project conditions were derived by adding project generated trips to existing traffic volumes. Existing Plus Project morning and evening peak hour intersection turning movement volumes are shown on Figure 16 and Figure 17, respectively.

Future Baseline Without Project

To assess Future Baseline Without Project traffic conditions, existing traffic volumes were combined with ambient growth. Future Baseline Without Project morning and evening peak hour intersection turning movement volumes are shown on Figure 18 and Figure 19, respectively.

Future Baseline With Project

To assess Future Baseline With Project traffic conditions, project generated trips were added to Future Baseline Without Project traffic volumes. Future Baseline With Project morning and evening peak hour intersection turning movement volumes are shown on Figure 20 and Figure 21, respectively.

Future Baseline Plus Cumulative Projects Without Project

To assess Future Baseline Plus Cumulative Projects Without Project traffic conditions, existing traffic volumes were combined with ambient growth and cumulative projects. Future Baseline Plus Cumulative Projects Without Project morning and evening peak hour intersection turning movement volumes are shown on Figure 22 and Figure 23, respectively.

Future Baseline Plus Cumulative Projects With Project

To assess Future Baseline Plus Cumulative Projects With Project traffic conditions, project generated trips were added to Future Baseline Plus Cumulative Projects Without Project traffic volumes. Future Baseline Plus Cumulative Projects With Project morning and evening peak hour intersection turning movement volumes are shown on Figure 24 and Figure 25, respectively.

Table 3
Cumulative Projects Trip Generation

ID	Project/Land Use	Quantity	Units[1]	Source[2]	Trips Generated						
					Morning Peak Hour			Evening Peak Hour			
					In	Out	Total	In	Out	Total	Daily
City of Irwindale											
I1	Pilot Flying J Travel Center and Truck Sales										
	Truck Stop	20.670	TSF	ITE 950	274	274	548	249	221	470	9,416
	Pass-By (62% AM, 56% PM)[3]				-170	-170	-340	-139	-124	-263	-603
	Truck Sales	30.000	TSF	ITE 840	41	15	56	29	44	73	835
I2	Panattoni Industrial - 1200 Arrow Hwy	130.366	TSF	ITE 110	81	10	91	10	72	82	647
I3	Panattoni Industrial - 16203 Arrow Hwy	85.400	TSF	ITE 130	27	7	34	7	27	34	288
I4	Ayala Industrial Building	80.000	TSF	ITE 130	26	6	32	6	26	32	270
I5	Wendy's	2.300	TSF	ITE 934	47	45	92	39	36	75	1,083
	Pass-By (49% AM, 50% PM)				-23	-22	-45	-20	-18	-38	-83
I6	Reliance II Specific Plan										
	Industrial Park	1,853.500	TSF	ITE 130	593	148	741	148	593	741	6,246
	Shopping Center	10.000	TSF	ITE 820	6	3	9	18	20	38	378
	Pass-By (34% PM)							-6	-7	-13	-13
I7	City of Hope Medical Offices	90.000	TSF	ITE 720	195	55	250	87	224	311	3,132
I8	The Park at Live Oak Specific Plan										
	Industrial Park	1,451.400	TSF	ITE 130	464	117	581	116	465	581	4,891
	Shopping Center	98.600	TSF	ITE 820	125	76	201	258	280	538	5,955
	Pass-By (34% PM)				0	0	0	-88	-95	-183	-183
I9	Materials Recovery Facility & Transfer Station	6,000.00	TPD	STUDY	350	314	664	336	328	664	8,333
City of Baldwin Park											
B1	4923 Fortin Street - Single Family Residential	15	DU	ITE 210	3	8	11	9	6	15	142
B2	5115 Azusa Canyon Road Warehouse	90.000	TSF	ITE 150	12	3	15	5	12	17	157
City of Azusa											
A1	525 N. Azusa Avenue										
	Multi-Family Residential	102	DU	ITE 220	11	36	47	36	21	57	747
	Retail	4.600	TSF	ITE 820	3	1	4	8	10	18	174
A2	California Grand Village Azusa Greens	256	DU	ITE 252	18	33	51	36	31	67	947
A3	198 S. Peckham Road - Industrial	12.184	TSF	ITE 110	8	1	9	1	7	8	60
A4	Azusa Business Center	462.491	TSF	ITE 130	148	37	185	37	148	185	1,559
A5	Block 36										
	Multi-Family Residential	120	DU	ITE 220	13	42	55	42	25	67	878
	Retail	32.530	TSF	ITE 820	19	12	31	60	64	124	1,228
	Pass-By (34% PM)							-20	-22	-42	-42
A6	Starbucks	1.850	TSF	ITE 937	84	81	165	40	40	80	1,518
	Pass-By (49% AM)[4]				-41	-40	-81	0	0	0	-81
A7	Lagunitas Brewing Company	342.629	TSF	ITE 140	164	48	212	72	158	230	1,347
A8	CT Azusa Center - Industrial	181.800	TSF	ITE 130	58	15	73	15	58	73	613
A10	Crow Holdings Industrial	146.000	TSF	ITE 130	47	11	58	12	46	58	492
A11	Gladstone Senior Villas	60	DU	ITE 252	4	8	12	8	8	16	222
City of West Covina											
W1	Public Storage	25.000	TSF	ITE 151	2	1	3	2	2	4	38
W2	1415 W Garvey Avenue Assisted Living	78.703	TSF	ITE 254	9	6	15	8	12	20	205
Total Trips Generated by Other Developments					2,598	1,181	3,779	1,421	2,718	4,139	50,796

Notes:

(1) TSF = Thousand Square Feet; DU = Dwelling Units; TPD = Tons Per Day

(2) ITE = Institute of Transportation Engineers, Trip Generation Manual, 10th Edition, 2017; ### = Land Use Code

(3) Exact pass-by data not available, the pass-by rates for Service Station (ITE 945) were used.

(4) Exact pass-by data not available, the AM pass-by rate for Fast-food Restaurant w/ Drive-Thru (ITE 934) was used.

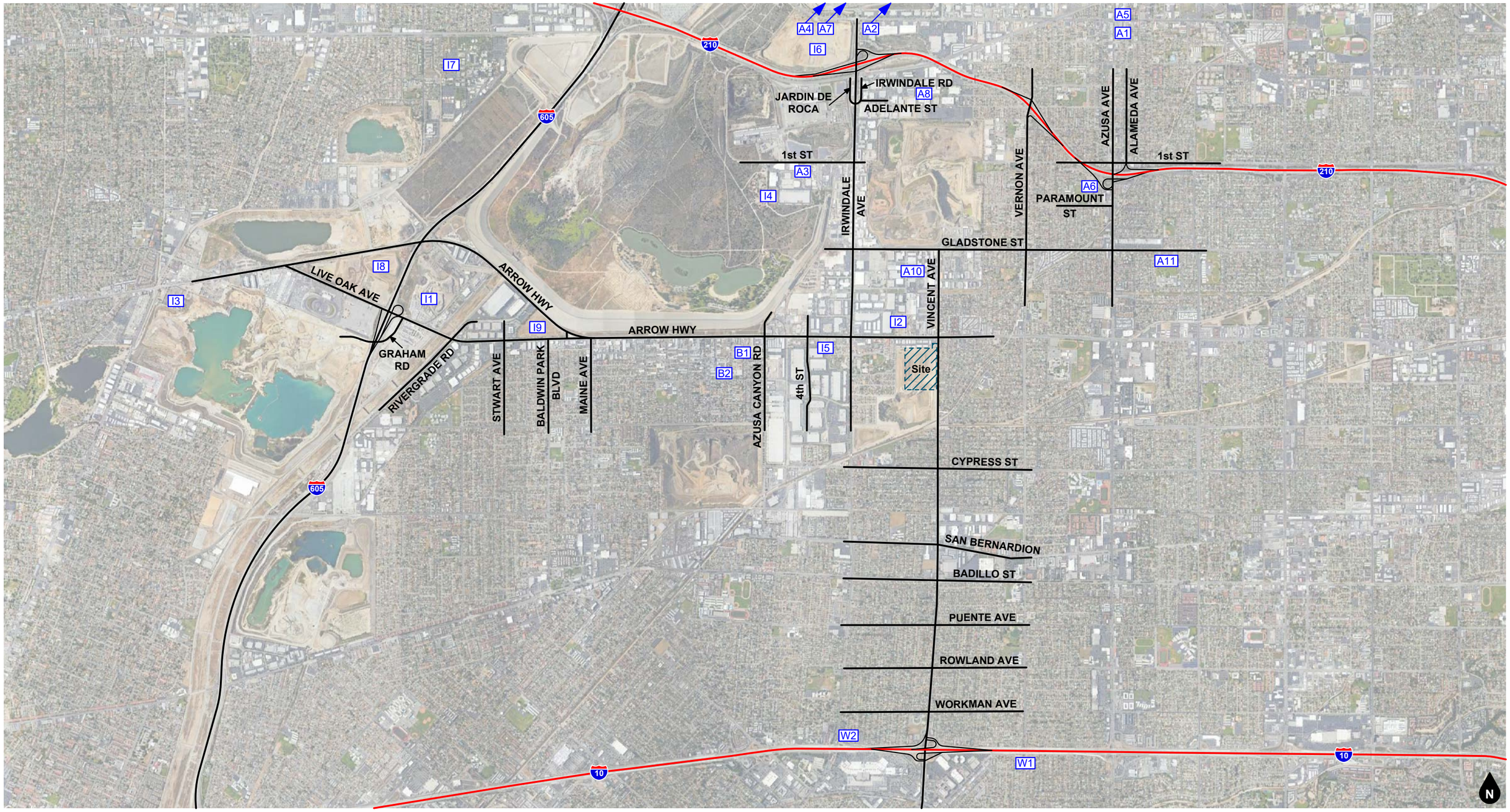

Legend

[#] Traffic Analysis Zone

Figure 15
Cumulative Project Location Map

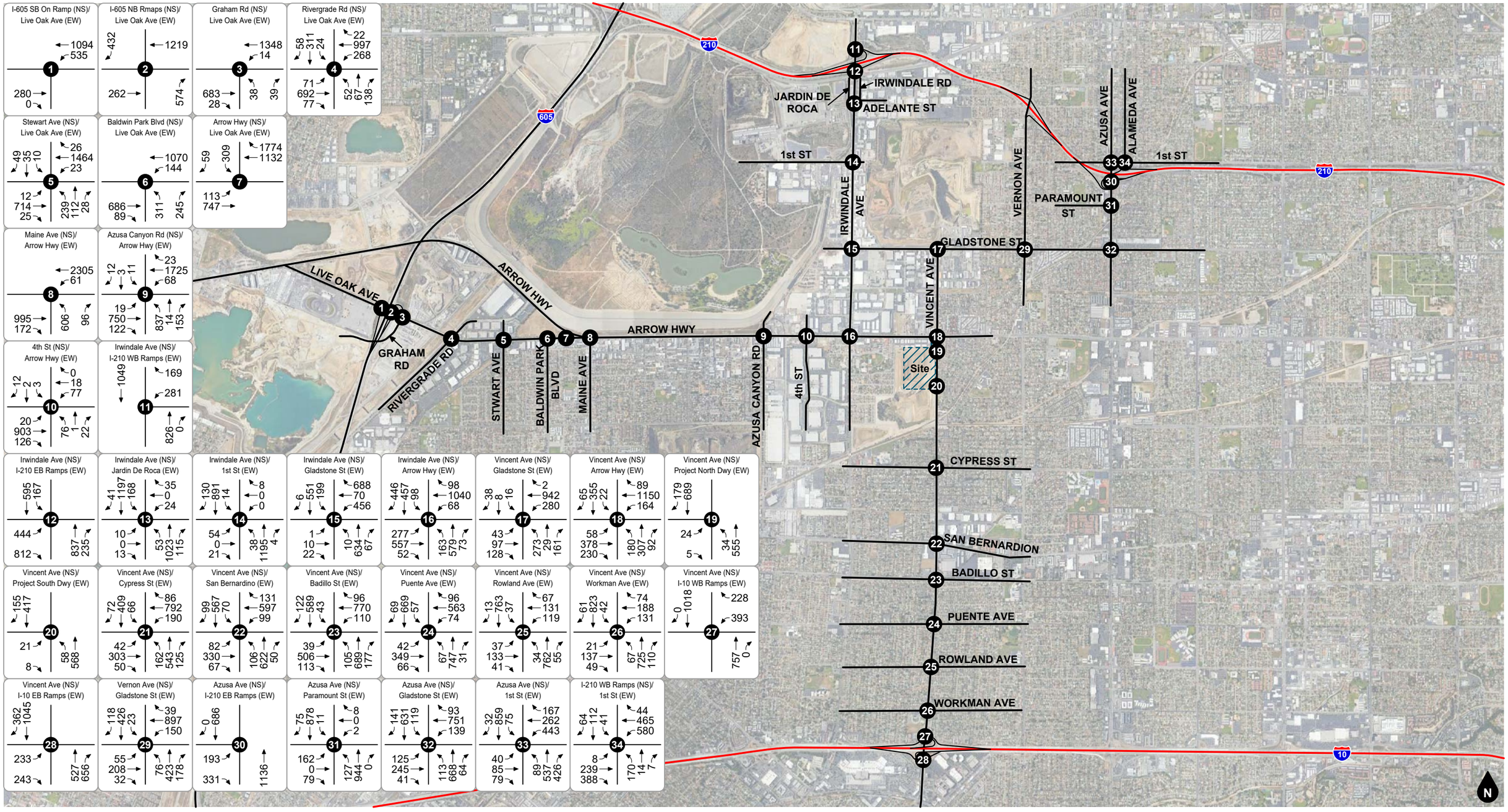

Legend

(#) Study Intersection

Figure 16
Existing Plus Project
AM Peak Hour Intersection Turning Movement Volumes

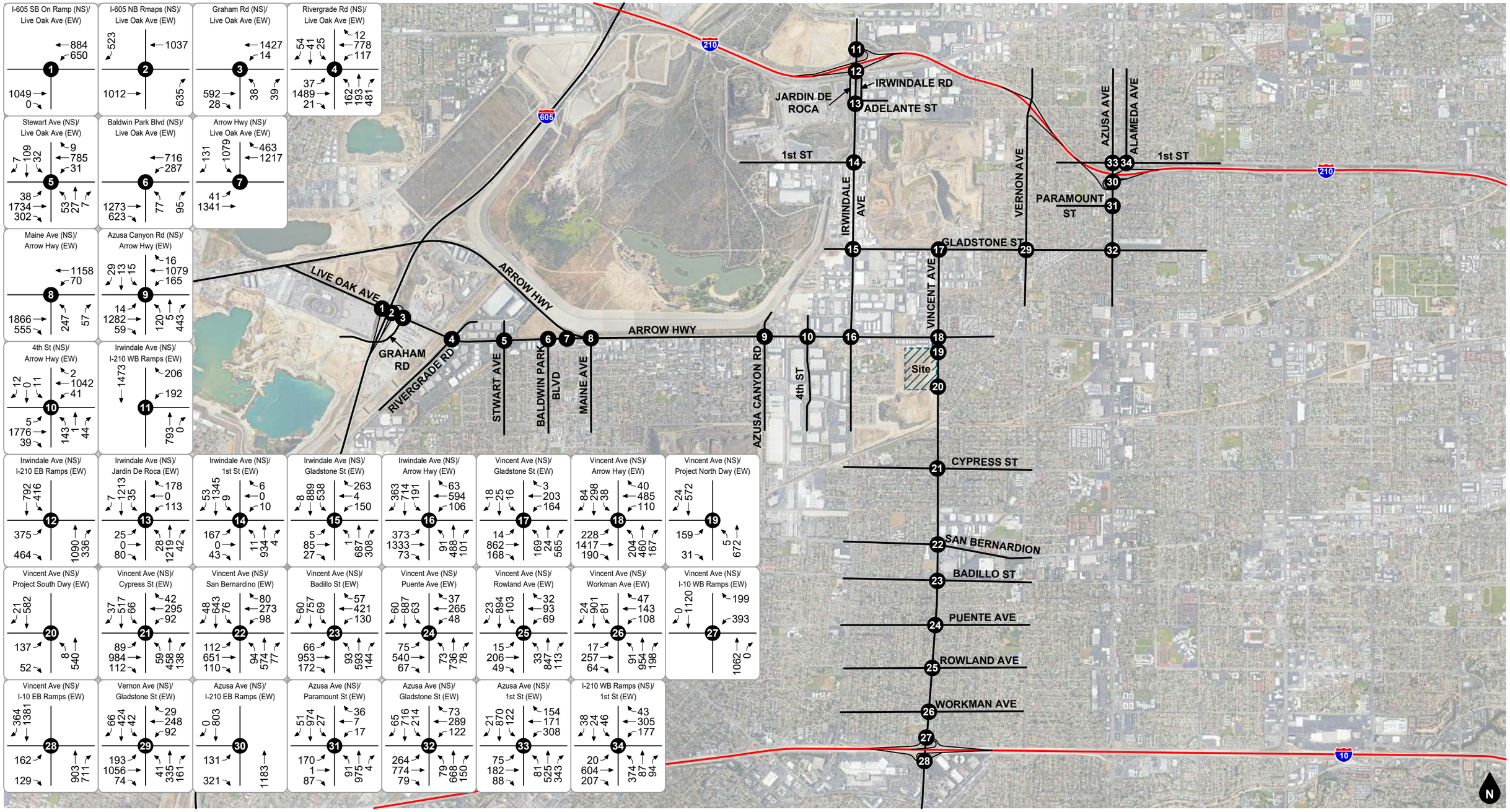

Legend

Study Intersection

Figure 17
Existing Plus Project
PM Peak Hour Intersection Turning Movement Volumes

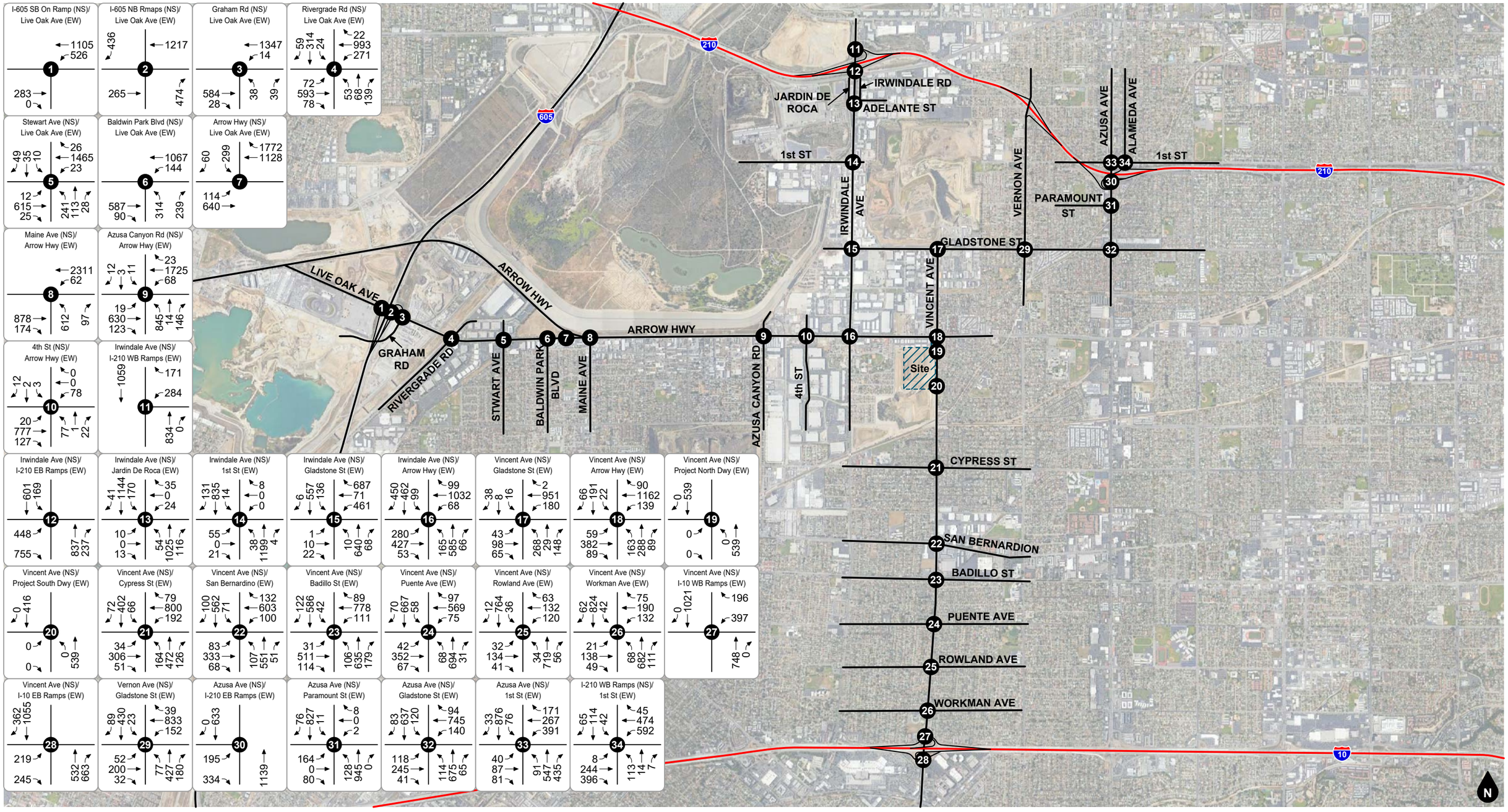

Legend

Study Intersection

Figure 18
Future Baseline Without Project
AM Peak Hour Intersection Turning Movement Volumes

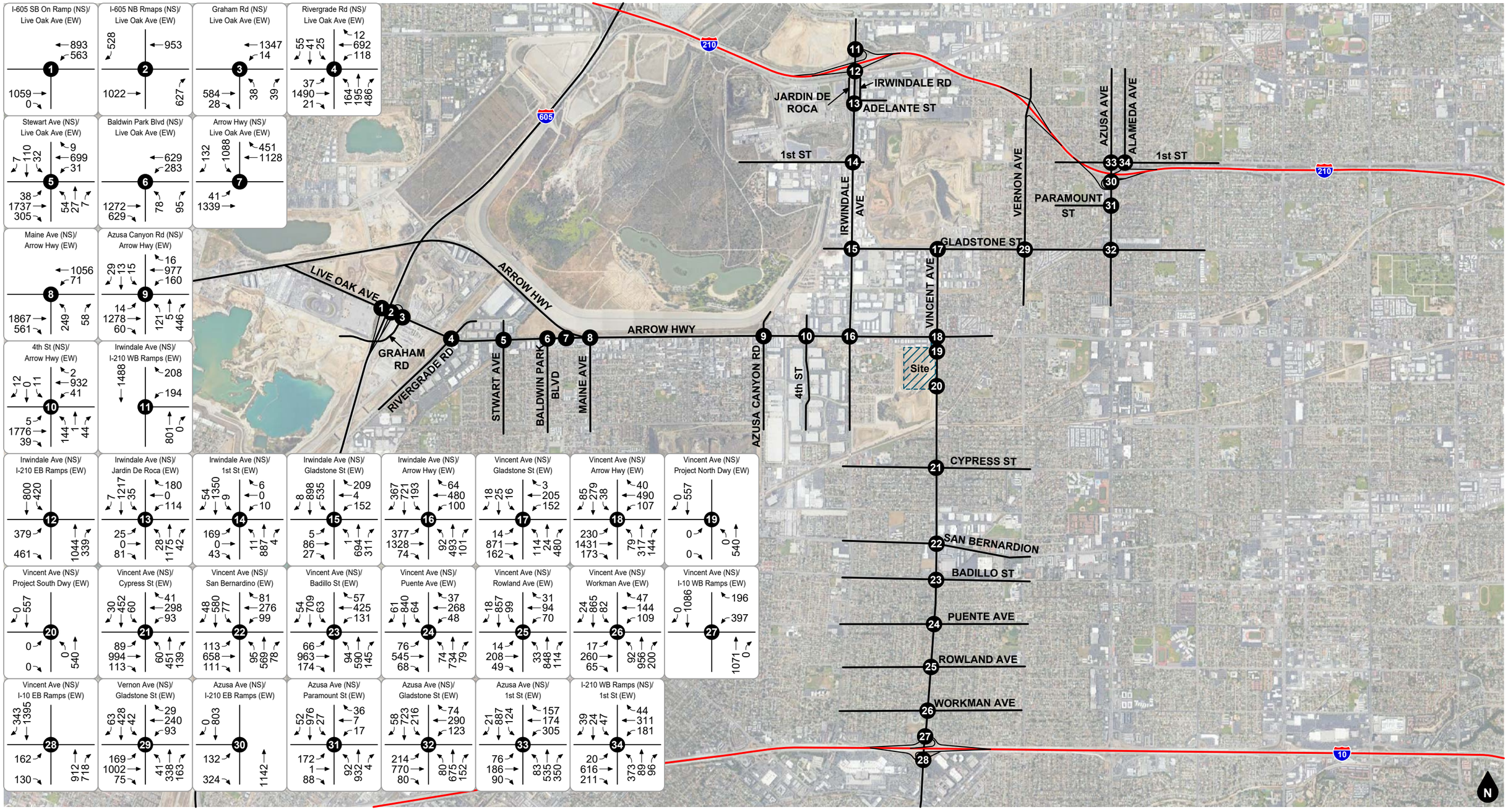

Legend

(#) Study Intersection

Figure 19
Future Baseline Without Project
PM Peak Hour Intersection Turning Movement Volumes

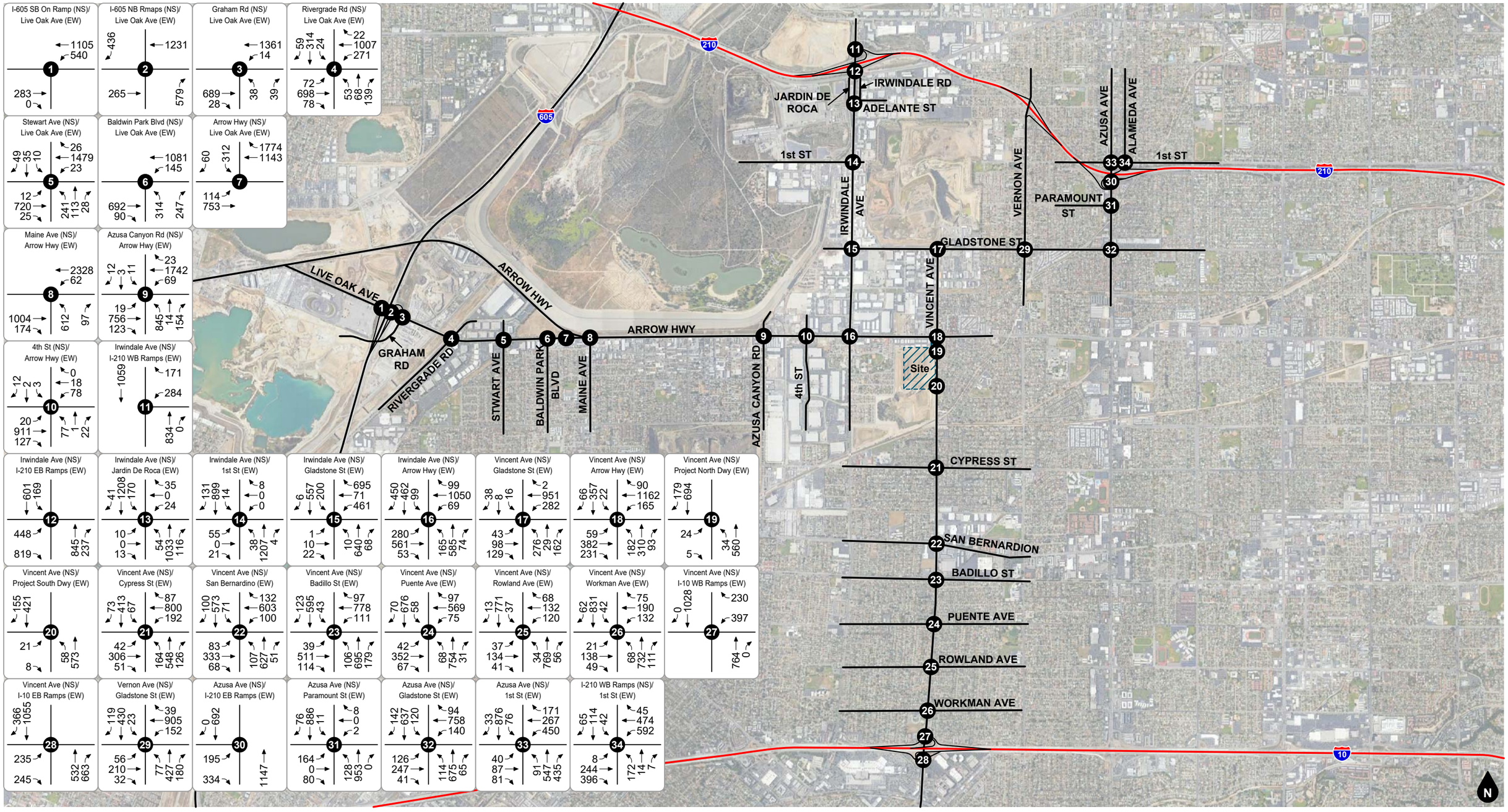

Legend

(#) Study Intersection

Figure 20
Future Baseline With Project
AM Peak Hour Intersection Turning Movement Volumes

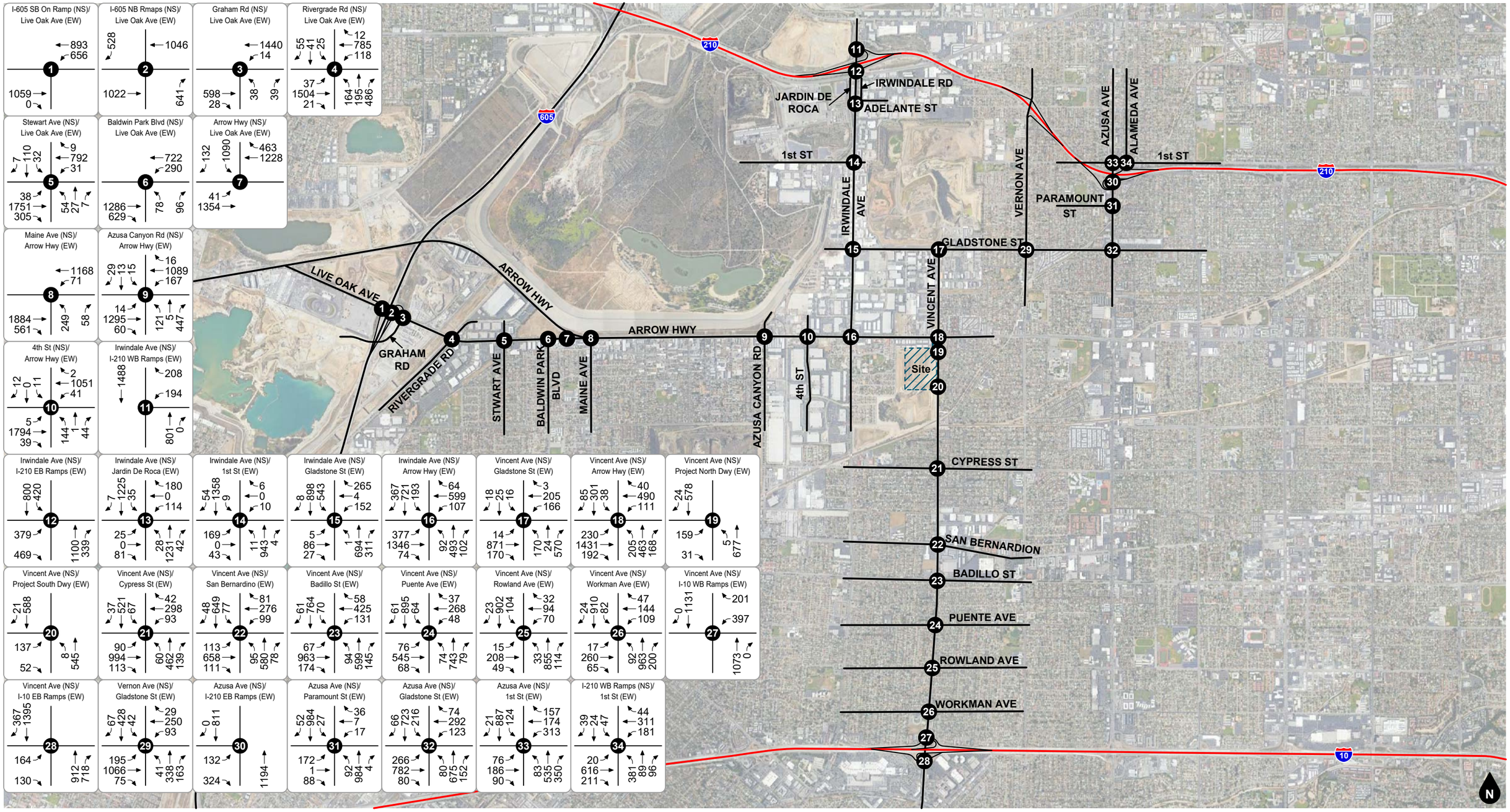

Legend

Study Intersection

Figure 21
Future Baseline With Project
PM Peak Hour Intersection Turning Movement Volumes

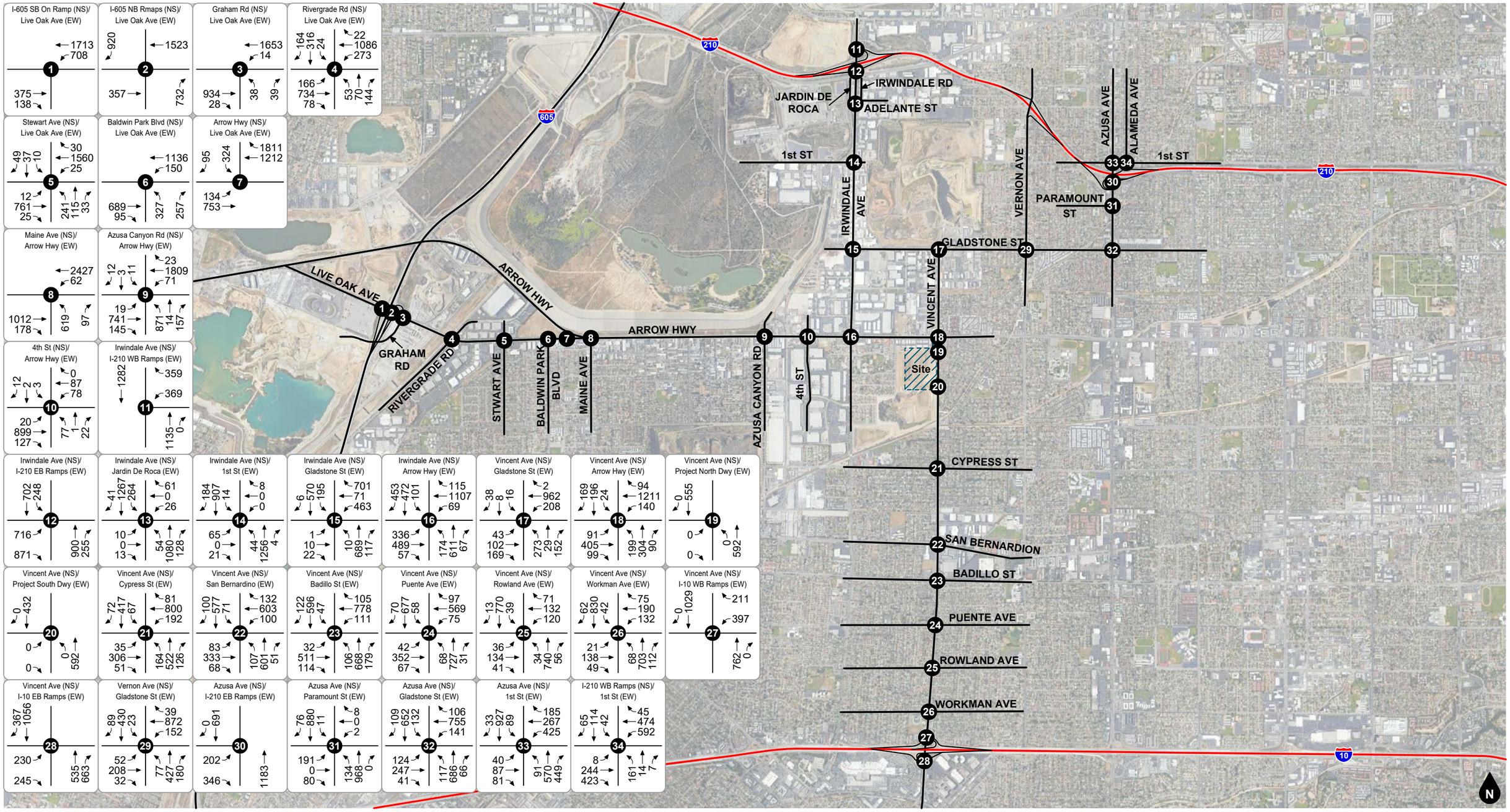

Legend

Study Intersection

Figure 22
Future Baseline Plus Cumulative Projects Without Project
AM Peak Hour Intersection Turning Movement Volumes

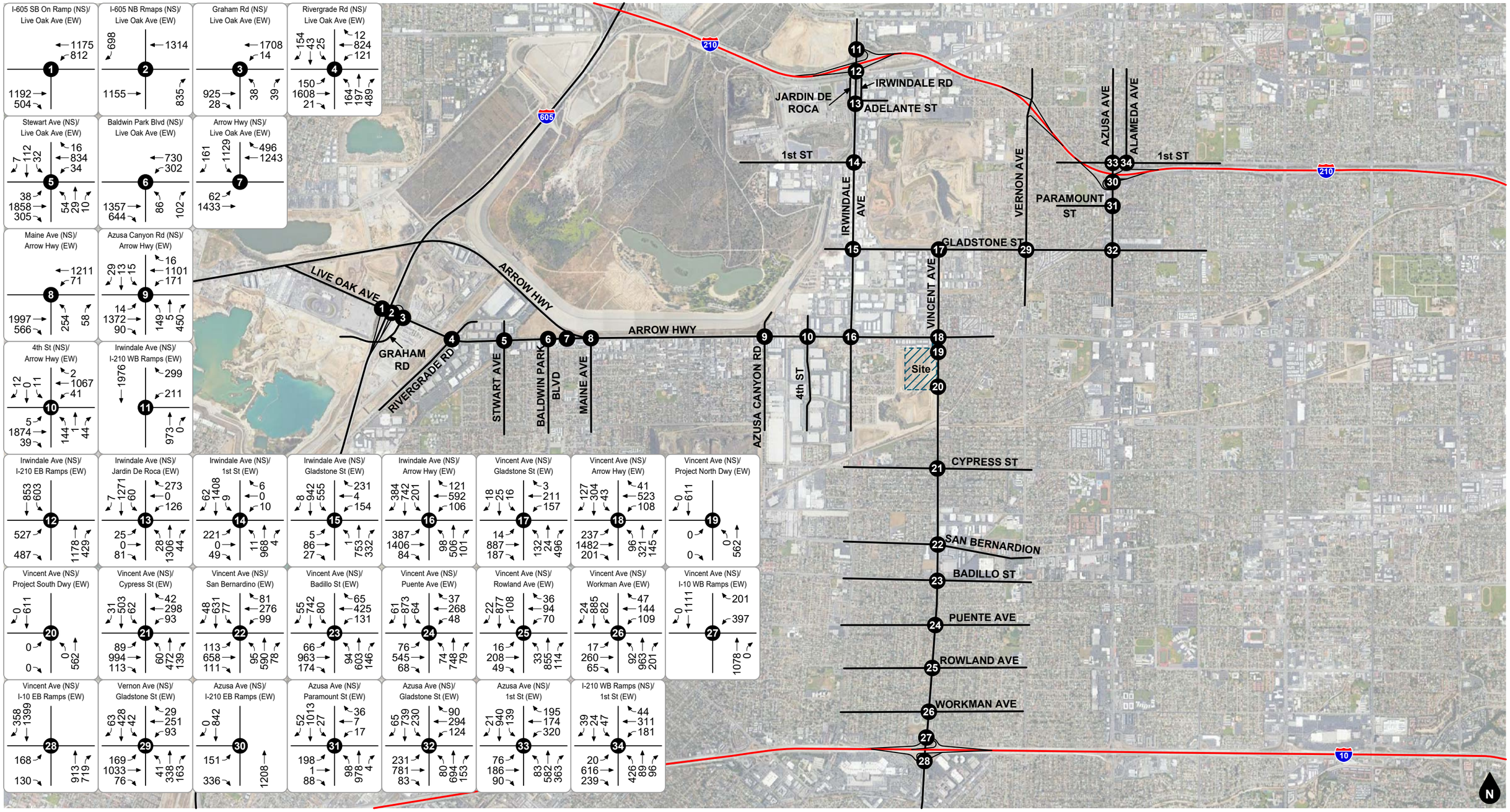

Legend

Study Intersection

Figure 23
Future Baseline Plus Cumulative Projects Without Project
PM Peak Hour Intersection Turning Movement Volumes

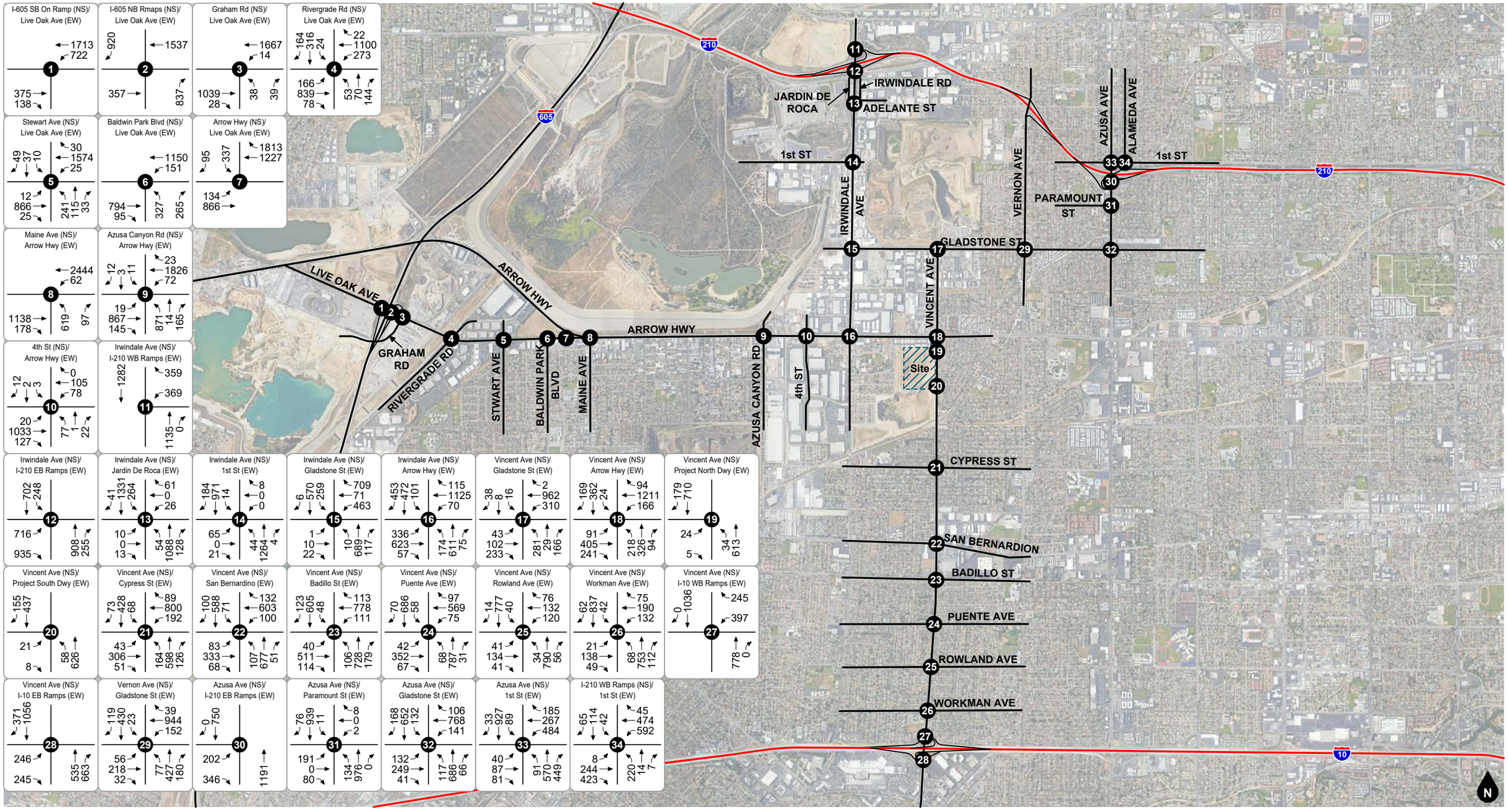

Legend

Study Intersection

Figure 24
Future Baseline Plus Cumulative Projects With Project
AM Peak Hour Intersection Turning Movement Volumes

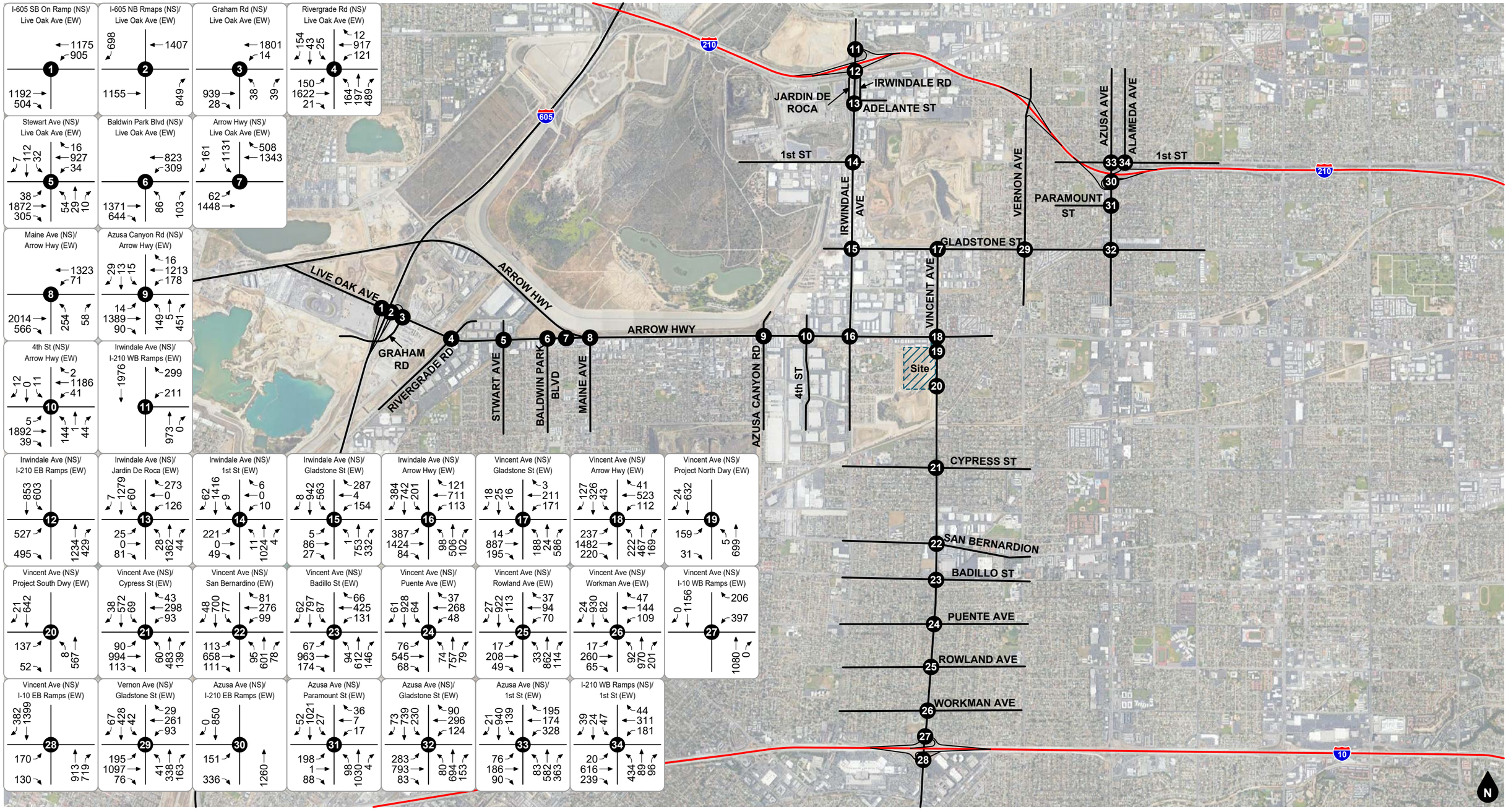

Legend

Study Intersection

Figure 25
Future Baseline Plus Cumulative Projects With Project
PM Peak Hour Intersection Turning Movement Volumes

6. FUTURE OPERATIONAL ANALYSIS

Detailed intersection Level of Service calculation worksheets for each of the following analysis scenarios are provided in Appendix C.

EXISTING PLUS PROJECT

Intersection Capacity Utilization/Delay and Levels of Service

The Intersection Capacity Utilization/delay and Levels of Service for Existing Plus Project traffic conditions, without and with improvements, are shown in Table 4. As shown in Table 4, the study intersections are projected to operate within acceptable Levels of Service during the peak hours for Existing Plus Project traffic conditions, except for the following study intersections that are projected to operate at unacceptable Levels of Service (E or F) during the peak hours:

- I-605 Freeway NB Ramps/Live Oak Avenue - #2 (morning/evening peak hours)
- Azusa Canyon Road/Arrow Highway - #9 (morning/evening peak hours)
- Vincent Avenue/Gladstone Street - #17 (evening peak hour only)
- Alameda Avenue/I-210 WB Ramps/1st Street - #34 (morning peak hour only)

Significant Impact Evaluation

Table 4 evaluates the change in performance between Existing and Existing Plus Project traffic conditions at the study intersections. As shown in Table 4, the proposed project is forecast to result in no significant traffic impacts with the following study intersection improvements for Existing Plus Project traffic conditions:

- Mitigation Measure #2A-2C: I-605 Freeway NB Ramps/Live Oak Avenue - #2
  - Install a traffic signal.
  - Construct an additional right-turn lane at the northbound approach.
  - Construct an additional right-turn lane at the southbound approach.

- Mitigation Measure #9A-9B: Azusa Canyon Road/Arrow Highway - #9
  - Re-stripe to create a shared through/right-turn lane at the eastbound approach.
  - Re-stripe to create a shared through-right-turn lane at the westbound approach.

- Mitigation Measure #17: Vincent Avenue/Gladstone Street - #17
  - Re-stripe to create a shared left-turn/through/right-turn lane at the northbound approach.

- Mitigation Measure #34A-34B: Alameda Avenue/I-210 WB Ramps/1st Street - #34
  - Restripe the westbound approach to consist of two left turn lanes, one through lane, and one right turn lane.
  - Modify signalization as necessary to accommodate east-west protected signal phasing, including necessary signal poles, mast arms, and signal heads.

FUTURE BASELINE WITHOUT PROJECT

Intersection Capacity Utilization/Delay and Levels of Service

The Intersection Capacity Utilization/delay and Levels of Service for Future Baseline Without Project traffic conditions are shown in Table 5. As shown in Table 5, the study intersections are projected to operate within acceptable Levels of Service during the peak hours for Future Baseline Without Project traffic conditions,

except for the following study intersections that are projected to operate at unacceptable Levels of Service (E or F) during the peak hours:

- I-605 Freeway NB Ramps/Live Oak Avenue - #2 (morning/evening peak hours)
- Azusa Canyon Road/Arrow Highway - #9 (morning/evening peak hours)
- Alameda Avenue/I-210 WB Ramps/1st Street - #34 (morning peak hour only)

FUTURE BASELINE WITH PROJECT

Intersection Capacity Utilization/Delay and Levels of Service

The Intersection Capacity Utilization/delay and Levels of Service for Future Baseline With Project traffic conditions, without and with improvements, are shown in Table 7. As shown in Table 7, the study intersections are projected to operate within acceptable Levels of Service during the peak hours for Future Baseline With Project traffic conditions, except for the following study intersections that are projected to operate at generally unacceptable Levels of Service (E or F) during the peak hours:

- I-605 Freeway NB Ramps/Live Oak Avenue - #2 (morning/evening peak hours)
- Arrow Highway/Live Oak Avenue - #7 (evening peak hour only)
- Azusa Canyon Road/Arrow Highway - #9 (morning/evening peak hours)
- Vincent Avenue/Gladstone Street - #17 (evening peak hour only)
- Alameda Avenue/I-210 WB Ramps/1st Street - #34 (morning peak hour only)

Significant Impact Evaluation

Table 8 evaluates the change in performance between Future Baseline Without Project and Future Baseline With Project traffic conditions at the study intersections. As shown in Table 8, the proposed project is forecast to result in no significant traffic impacts with the following study intersection improvements for Future Baseline With Project traffic conditions:

- Mitigation Measure #2A-2C: I-605 Freeway NB Ramps/Live Oak Avenue - #2
  - Install a traffic signal.
  - Construct an additional right-turn lane at the northbound approach.
  - Construct an additional right-turn lane at the southbound approach.

- Mitigation Measure #7A-7B: Arrow Highway/Live Oak Avenue - #7
  - Re-stripe to create an additional through lane at the eastbound approach.
  - Re-stripe to create an additional through lane at the westbound approach.

- Mitigation Measure #9A-9B: Azusa Canyon Road/Arrow Highway - #9
  - Re-stripe to create a shared through/right-turn lane at the eastbound approach.
  - Re-stripe to create a shared through-right-turn lane at the westbound approach.

- Mitigation Measure #17: Vincent Avenue/Gladstone Street - #17
  - Re-stripe to create a shared left-turn/through/right-turn lane at the northbound approach.

- Mitigation Measure #34A-34B: Alameda Avenue/I-210 WB Ramps/1st Street - #34
  - Restripe the westbound approach to consist of two left turn lanes, one through lane, and one right turn lane.
  - Modify signalization as necessary to accommodate east-west protected signal phasing, including necessary signal poles, mast arms, and signal heads.

FUTURE BASELINE PLUS CUMULATIVE PROJECTS WITHOUT PROJECT

Intersection Capacity Utilization/Delay and Levels of Service

The Intersection Capacity Utilization/delay and Levels of Service for Future Baseline Plus Cumulative Projects Without Project traffic conditions are shown in Table 9. As shown in Table 9, the study intersections are projected to operate within acceptable Levels of Service during the peak hours for Future Baseline Plus Cumulative Projects Without Project traffic conditions, except for the following study intersections that are projected to operate at unacceptable Levels of Service (E or F) during the peak hours:

- I-605 Freeway SB On-Ramp/Live Oak Avenue - #1 (evening peak hour only)
- I-605 Freeway NB Ramps/Live Oak Avenue - #2 (morning/evening peak hours)
- Rivergrade Road/Live Oak Avenue - #4 (evening peak hour only)
- Arrow Highway/Live Oak Avenue - #7 (evening peak hour only)
- Azusa Canyon Road/Arrow Highway - #9 (morning/evening peak hours)
- Alameda Avenue/I-210 WB Ramps/1st Street - #34 (morning peak hour only)

FUTURE BASELINE PLUS CUMULATIVE PROJECTS WITH PROJECT

Intersection Capacity Utilization/Delay and Levels of Service

The Intersection Capacity Utilization/delay and Levels of Service for Future Baseline Plus Cumulative Projects With Project traffic conditions, without and with improvements, are shown in Table 10. As shown in Table 10, the study intersections are projected to operate within acceptable Levels of Service during the peak hours for Future Baseline Plus Cumulative Projects With Project, except for the following study intersections that are projected to operate at unacceptable Levels of Service (E or F) during the peak hours:

- I-605 Freeway SB On-Ramp/Live Oak Avenue - #1 (evening peak hour only)
- I-605 Freeway NB Ramps/Live Oak Avenue - #2 (morning/evening peak hours)
- Rivergrade Road/Live Oak Avenue - #4 (evening peak hour only)
- Arrow Highway/Live Oak Avenue - #7 (evening peak hour only)
- Azusa Canyon Road/Arrow Highway - #9 (morning/evening peak hours)
- Vincent Avenue/Gladstone Street - #17 (evening peak hour only)
- Vincent Avenue/Arrow Highway - #18 (evening peak hour only)
- Alameda Avenue/I-210 WB Ramps/1st Street - #34 (morning peak hour only)

Significant Impact Evaluation

Table 11 evaluates the change in performance between Future Baseline Plus Cumulative Projects Without Project and Future Baseline Plus Cumulative Projects With Project traffic conditions at the study intersections. As shown in Table 11, the proposed project is forecast to result in no significant traffic impacts with the following study intersection improvements for Future Baseline Plus Cumulative Projects With Project traffic conditions:

- Mitigation Measure #1: I-605 Freeway SB On-Ramp/ Live Oak Avenue - #1
  - Construct an additional left-turn lane at the westbound approach. Construct a receiving lane on the southern leg.

- Mitigation Measure #2A-2D: I-605 Freeway NB Ramps/Live Oak Avenue - #2
  - Install a traffic signal.
  - Construct an additional right-turn lane at the northbound approach.
  - Construct an additional right-turn lane at the southbound approach.
  - Re-stripe to create an additional through lane at the westbound approach.

- Mitigation Measure #7A-7B: Arrow Highway/Live Oak Avenue - #7
  - Re-stripe to create an additional through lane at the eastbound approach.
  - Re-stripe to create an additional through lane at the westbound approach.

- Mitigation Measure #9A-9B: Azusa Canyon Road/Arrow Highway - #9
  - Re-stripe to create a shared through/right-turn lane at the eastbound approach.
  - Re-stripe to create a shared through-right-turn lane at the westbound approach.

- Mitigation Measure #17: Vincent Avenue/Gladstone Street - #17
  - Re-stripe to create a shared left-turn/through/right-turn lane at the northbound approach.

- Mitigation Measure #18: Vincent Avenue/Arrow Highway - #18
  - Re-stripe to create a shared through/right-turn lane at the eastbound approach.

- Mitigation Measure #34A-34B: Alameda Avenue/I-210 WB Ramps/1st Street - #34
  - Restripe the westbound approach to consist of two left turn lanes, one through lane, and one right turn lane.
  - Modify signalization as necessary to accommodate east-west protected signal phasing, including necessary signal poles, mast arms, and signal heads.

Table 4
Page 1 of 2
Existing Plus Project Intersection Levels of Service

ID	Study Intersection	Traffic Control[1]	AM Peak Hour V/C[2] or [Delay][3]	AM Peak Hour LOS[4]	PM Peak Hour V/C[2] or [Delay][3]	PM Peak Hour LOS[4]
1.	I-605 SB On-Ramp at Live Oak Ave	TS	0.522	A	0.834	D
2.	I-605 NB On-Ramp at Live Oak Ave	CSS	[70.8]	F	[149.2]	F
	- With Mitigation	TS	0.795	C	0.786	C
3.	Graham Rd at Live Oak Ave	TS	0.569	A	0.594	A
4.	Rivergrade Rd at Live Oak Ave	TS	0.613	B	0.882	D
5.	Stewart Ave at Live Oak Ave	TS	0.808	D	0.763	C
6.	Baldwin Park Blvd at Live Oak Ave	TS	0.605	B	0.743	C
7.	Arrow Hwy at Live Oak Ave	TS	0.632	B	0.894	D
8.	Maine Ave at Arrow Hwy	TS	0.791	C	0.813	D
9.	Azusa Canyon Rd at Arrow Hwy	TS	0.926	E	0.907	E
	- With Mitigation	TS	0.751	C	0.649	B
10.	4th St at Arrow Hwy	TS	0.371	A	0.555	A
11.	Irwindale Ave at I-210 WB Ramps	TS	0.459	A	0.536	A
12.	Irwindale Ave at I-210 EB Ramps	TS	0.681	B	0.760	C
13.	Irwindale Ave at Jardin De Roca/Irwindale Rd	TS	0.568	A	0.700	B
14.	Irwindale Ave at 1st St	TS	0.505	A	0.457	A
15.	Irwindale Ave at Gladstone St	TS	0.666	B	0.648	B
16.	Irwindale Ave at Arrow Hwy	TS	0.846	D	0.763	C
17.	Vincent Ave at Gladstone St	TS	0.530	A	0.903	E
	- With Mitigation	TS	0.526	A	0.734	C
18.	Vincent Ave at Arrow Hwy	TS	0.740	C	0.858	D
19.	Vincent Ave at Project North Dwy	CSS	[14.6]	B	[17.0]	C
20.	Vincent Ave at Project South Dwy	CSS	[12.7]	B	[16.1]	C
21.	Vincent Ave at Cypress St	TS	0.652	B	0.728	C
22.	Vincent Ave at San Bernardino Rd	TS	0.653	B	0.674	B
23.	Vincent Ave at Badillo St	TS	0.615	B	0.774	C
24.	Vincent Ave at Puente Ave	TS	0.594	A	0.645	B
25.	Vincent Ave at Rowland Ave	TS	0.542	A	0.610	B
26.	Vincent Ave at Workman Ave	TS	0.612	B	0.688	B
27.	Vincent Ave at I-10 WB Ramps	TS	0.455	A	0.458	A
28.	Vincent Ave at I-10 EB Ramps	TS	0.492	A	0.538	A
29.	Vernon Ave/Lake Ellen Ave at Gladstone St	TS	0.706	C	0.746	C
30.	Azusa Ave at I-210 EB Ramps	TS	0.662	B	0.670	B
31.	Azusa Ave at Paramount St	TS	0.606	B	0.633	B
32.	Azusa Ave at Gladstone St	TS	0.754	C	0.736	C
33.	Azusa Ave/San Gabriel Ave at 1st St	TS	0.685	B	0.661	B

Table 4
Page 2 of 2
Existing Plus Project Intersection Levels of Service

ID	Study Intersection	Traffic Control[1]	AM Peak Hour V/C[2] or [Delay][3]	AM Peak Hour LOS[4]	PM Peak Hour V/C[2] or [Delay][3]	PM Peak Hour LOS[4]
34.	Alameda Ave/I-210 WB Ramps at 1st St	TS	0.936	E	0.692	B
	- With Mitigation	TS	0.742	C	0.633	B

Notes:

(1) TS = Traffic Signal; CSS = Cross Street Stop; AWS = All Way Stop

(2) V/C = Volume/Capacity

(3) Delay is shown in [seconds/vehicle]. Delay is reported for un-signalized study intersections. For intersections with cross street stop control, LOS is based on average delay of the worst individual lane (or movements sharing a lane).

(4) LOS = Level of Service

Table 5
Page 1 of 3
Existing Plus Project Significant Impact Evaluation

Signalized Intersections												
	AM Peak Hour						PM Peak Hour					
	Without Project		With Project				Without Project		With Project			
ID Study Intersection	V/C[1]	LOS[2]	V/C[1]	LOS[2]	Change	Significant Impact?	V/C[1]	LOS[2]	V/C[1]	LOS[2]	Change	Significant Impact?
1. I-605 SB On-Ramp at Live Oak Ave	0.513	A	0.522	A	+0.009	No	0.776	C	0.834	D	+0.058	No
3. Graham Rd at Live Oak Ave	0.565	A	0.569	A	+0.004	No	0.565	A	0.594	A	+0.029	No
4. Rivergrade Rd at Live Oak Ave	0.581	A	0.613	B	+0.032	No	0.877	D	0.882	D	+0.005	No
5. Stewart Ave at Live Oak Ave	0.804	D	0.808	D	+0.004	No	0.758	C	0.763	C	+0.005	No
6. Baldwin Park Blvd at Live Oak Ave	0.595	A	0.605	B	+0.0	No	0.734	C	0.743	C	+0.0	No
7. Arrow Hwy at Live Oak Ave	0.622	B	0.632	B	+0.010	No	0.888	D	0.894	D	+0.006	No
8. Maine Ave at Arrow Hwy	0.787	C	0.791	C	+0.004	No	0.807	D	0.813	D	+0.006	No
9. Azusa Canyon Rd at Arrow Hwy	0.921	E	0.926	E	+0.005	No	0.897	D	0.907	E	+0.010	Yes
- With Mitigation	n/a	n/a	0.751	C	-	No	n/a	n/a	0.649	B	-	No
10. 4th St at Arrow Hwy	0.343	A	0.371	A	+0.0	No	0.551	A	0.555	A	+0.0	No
11. Irwindale Ave at I-210 WB Ramps	0.459	A	0.459	A	-	No	0.536	A	0.536	A	-	No
12. Irwindale Ave at I-210 EB Ramps	0.665	B	0.681	B	+0.016	No	0.741	C	0.760	C	+0.019	No
13. Irwindale Ave at Jardin De Roca/Irwindale Rd	0.565	A	0.568	A	+0.003	No	0.692	B	0.700	B	+0.008	No
14. Irwindale Ave at 1st St	0.503	A	0.505	A	+0.002	No	0.444	A	0.457	A	+0.013	No
15. Irwindale Ave at Gladstone St	0.644	B	0.666	B	+0.022	No	0.646	B	0.648	B	+0.002	No
16. Irwindale Ave at Arrow Hwy	0.840	D	0.846	D	+0.006	No	0.754	C	0.763	C	+0.009	No
17. Vincent Ave at Gladstone St	0.521	A	0.530	A	+0.009	No	0.836	D	0.903	E	+0.067	Yes
- With Mitigation	n/a	n/a	0.526	A	-	No	n/a	n/a	0.734	C	-	No
18. Vincent Ave at Arrow Hwy	0.676	B	0.740	C	+0.064	No	0.776	C	0.858	D	+0.082	No
21. Vincent Ave at Cypress St	0.641	B	0.652	B	+0.011	No	0.720	C	0.728	C	+0.008	No
22. Vincent Ave at San Bernardino Rd	0.650	B	0.653	B	+0.003	No	0.652	B	0.674	B	+0.022	No

Table 5
Page 2 of 3
Existing Plus Project Significant Impact Evaluation

Signalized Intersections												
	AM Peak Hour						PM Peak Hour					
	Without Project		With Project				Without Project		With Project			
ID Study Intersection	V/C[1]	LOS[2]	V/C[1]	LOS[2]	Change	Significant Impact?	V/C[1]	LOS[2]	V/C[1]	LOS[2]	Change	Significant Impact?
23. Vincent Ave at Badillo St	0.607	B	0.615	B	+0.008	No	0.757	C	0.774	C	+0.017	No
24. Vincent Ave at Puente Ave	0.576	A	0.594	A	+0.018	No	0.628	B	0.645	B	+0.017	No
25. Vincent Ave at Rowland Ave	0.535	A	0.542	A	+0.007	No	0.604	B	0.610	B	+0.006	No
26. Vincent Ave at Workman Ave	0.609	B	0.612	B	+0.003	No	0.685	B	0.688	B	+0.003	No
27. Vincent Ave at I-10 WB Ramps	0.433	A	0.455	A	+0.022	No	0.447	A	0.458	A	+0.011	No
28. Vincent Ave at I-10 EB Ramps	0.482	A	0.492	A	+0.010	No	0.536	A	0.538	A	+0.002	No
29. Vernon Ave/Lake Ellen Ave at Gladstone St	0.681	B	0.706	C	+0.025	No	0.726	C	0.746	C	+0.020	No
30. Azusa Ave at I-210 EB Ramps	0.659	B	0.662	B	+0.003	No	0.654	B	0.670	B	+0.016	No
31. Azusa Ave at Paramount St	0.587	A	0.606	B	+0.019	No	0.631	B	0.633	B	+0.002	No
32. Azusa Ave at Gladstone St	0.726	C	0.754	C	+0.028	No	0.730	C	0.736	C	+0.006	No
33. Azusa Ave/San Gabriel Ave at 1st St	0.663	B	0.685	B	+0.022	No	0.658	B	0.661	B	+0.003	No
34. Alameda Ave/I-210 WB Ramps at 1st St	0.896	D	0.936	E	+0.040	Yes	0.687	B	0.692	B	+0.005	No
- With Mitigation	n/a	n/a	0.742	C	-	No	n/a	n/a	0.633	B	-	No

Table 5
Page 3 of 3
Existing Plus Project Significant Impact Evaluation

Unsignalized Intersections										
	AM Peak Hour					PM Peak Hour				
	With Project					With Project				
ID Intersection	[Delay][1]	LOS[2]	LOS E or F?	Traffic Signal Warranted?	Significant Impact?	[Delay][1]	LOS[2]	LOS E or F?	Traffic Signal Warranted?	Significant Impact?
2. I-605 NB On-Ramp at Live Oak Ave	[70.8]	F	Yes	Yes	Yes	[149.2]	F	Yes	Yes	Yes
- With Mitigation	0.795	C	No	n/a	No	0.786	C	No	n/a	No
19. Vincent Ave at Project North Dwy	[14.6]	B	No	n/a[3]	No	[17.0]	C	No	n/a	No
20. Vincent Ave at Project South Dwy	[12.7]	B	No	n/a[3]	No	[16.1]	C	No	n/a	No

Notes:
(1) V/C = Volume/Capacity; [Delay] is shown in seconds/vehicle

(2) LOS = Level of Service

(3) n/a = not applicable; peak hour traffic signal warrant only evaluated for LOS E or F conditions.

Table 6
Future Baseline Without Project Intersection Levels of Service

ID	Study Intersection	Traffic Control[1]	AM Peak Hour V/C[2] or [Delay][3]	AM Peak Hour LOS[4]	PM Peak Hour V/C[2] or [Delay][3]	PM Peak Hour LOS[4]
1.	I-605 SB On-Ramp at Live Oak Ave	TS	0.517	A	0.783	C
2.	I-605 NB On-Ramp at Live Oak Ave	CSS	[72.6]	F	[147.0]	F
3.	Graham Rd at Live Oak Ave	TS	0.569	A	0.569	A
4.	Rivergrade Rd at Live Oak Ave	TS	0.587	A	0.885	D
5.	Stewart Ave at Live Oak Ave	TS	0.810	D	0.765	C
6.	Baldwin Park Blvd at Live Oak Ave	TS	0.542	A	0.701	C
7.	Arrow Hwy at Live Oak Ave	TS	0.628	B	0.896	D
8.	Maine Ave at Arrow Hwy	TS	0.794	C	0.814	D
9.	Azusa Canyon Rd at Arrow Hwy	TS	0.929	E	0.904	E
10.	4th St at Arrow Hwy	TS	0.346	A	0.555	A
11.	Irwindale Ave at I-210 WB Ramps	TS	0.463	A	0.540	A
12.	Irwindale Ave at I-210 EB Ramps	TS	0.671	B	0.747	C
13.	Irwindale Ave at Jardin De Roca/Irwindale Rd	TS	0.570	A	0.697	B
14.	Irwindale Ave at 1st St	TS	0.507	A	0.447	A
15.	Irwindale Ave at Gladstone St	TS	0.649	B	0.651	B
16.	Irwindale Ave at Arrow Hwy	TS	0.848	D	0.761	C
17.	Vincent Ave at Gladstone St	TS	0.525	A	0.843	D
18.	Vincent Ave at Arrow Hwy	TS	0.682	B	0.782	C
21.	Vincent Ave at Cypress St	TS	0.647	B	0.726	C
22.	Vincent Ave at San Bernardino Rd	TS	0.655	B	0.658	B
23.	Vincent Ave at Badillo St	TS	0.612	B	0.763	C
24.	Vincent Ave at Puente Ave	TS	0.581	A	0.633	B
25.	Vincent Ave at Rowland Ave	TS	0.539	A	0.609	B
26.	Vincent Ave at Workman Ave	TS	0.614	B	0.691	B
27.	Vincent Ave at I-10 WB Ramps	TS	0.437	A	0.450	A
28.	Vincent Ave at I-10 EB Ramps	TS	0.486	A	0.541	A
29.	Vernon Ave/Lake Ellen Ave at Gladstone St	TS	0.686	B	0.732	C
30.	Azusa Ave at I-210 EB Ramps	TS	0.665	B	0.659	B
31.	Azusa Ave at Paramount St	TS	0.592	A	0.636	B
32.	Azusa Ave at Gladstone St	TS	0.732	C	0.737	C
33.	Azusa Ave/San Gabriel Ave at 1st St	TS	0.645	B	0.669	B
34.	Alameda Ave/I-210 WB Ramps at 1st St	TS	0.913	E	0.699	B

Notes:

(1) TS = Traffic Signal; CSS = Cross Street Stop; AWS = All Way Stop

(2) V/C = Volume/Capacity

(3) Delay is shown in [seconds/vehicle]. Delay is reported for un-signalized study intersections. For intersections with cross street stop control, LOS is based on average delay of the worst individual lane (or movements sharing a lane).

(4) LOS = Level of Service

Table 7
Page 1 of 2
Future Baseline With Project Intersection Levels of Service

ID	Study Intersection	Traffic Control[1]	AM Peak Hour V/C[2] or [Delay][3]	AM Peak Hour LOS[4]	PM Peak Hour V/C[2] or [Delay][3]	PM Peak Hour LOS[4]
1.	I-605 SB On-Ramp at Live Oak Ave	TS	0.526	A	0.841	D
2.	I-605 NB On-Ramp at Live Oak Ave	CSS	[75.7]	F	[157.8]	F
	- With Mitigation	TS	0.802	D	0.792	C
3.	Graham Rd at Live Oak Ave	TS	0.573	A	0.598	A
4.	Rivergrade Rd at Live Oak Ave	TS	0.619	B	0.889	D
5.	Stewart Ave at Live Oak Ave	TS	0.815	D	0.769	C
6.	Baldwin Park Blvd at Live Oak Ave	TS	0.547	A	0.710	C
7.	Arrow Hwy at Live Oak Ave	TS	0.637	B	0.902	E
	- With Mitigation	TS	0.518	A	0.761	C
8.	Maine Ave at Arrow Hwy	TS	0.798	C	0.820	D
9.	Azusa Canyon Rd at Arrow Hwy	TS	0.934	E	0.915	E
	- With Mitigation	TS	0.757	C	0.792	C
10.	4th St at Arrow Hwy	TS	0.374	A	0.559	A
11.	Irwindale Ave at I-210 WB Ramps	TS	0.463	A	0.540	A
12.	Irwindale Ave at I-210 EB Ramps	TS	0.687	B	0.766	C
13.	Irwindale Ave at Jardin De Roca/Irwindale Rd	TS	0.572	A	0.706	C
14.	Irwindale Ave at 1st St	TS	0.509	A	0.461	A
15.	Irwindale Ave at Gladstone St	TS	0.671	B	0.654	B
16.	Irwindale Ave at Arrow Hwy	TS	0.853	D	0.769	C
17.	Vincent Ave at Gladstone St	TS	0.533	A	0.911	E
	- With Mitigation	TS	0.529	A	0.740	C
18.	Vincent Ave at Arrow Hwy	TS	0.746	C	0.865	D
19.	Vincent Ave at Project North Dwy	CSS	[14.7]	B	[17.3]	C
20.	Vincent Ave at Project South Dwy	CSS	[12.8]	B	[16.2]	C
21.	Vincent Ave at Cypress St	TS	0.658	B	0.734	C
22.	Vincent Ave at San Bernardino Rd	TS	0.659	B	0.679	B
23.	Vincent Ave at Badillo St	TS	0.620	B	0.780	C
24.	Vincent Ave at Puente Ave	TS	0.599	A	0.650	B
25.	Vincent Ave at Rowland Ave	TS	0.545	A	0.615	B
26.	Vincent Ave at Workman Ave	TS	0.617	B	0.693	B
27.	Vincent Ave at I-10 WB Ramps	TS	0.458	A	0.461	A
28.	Vincent Ave at I-10 EB Ramps	TS	0.496	A	0.542	A
29.	Vernon Ave/Lake Ellen Ave at Gladstone St	TS	0.711	C	0.752	C
30.	Azusa Ave at I-210 EB Ramps	TS	0.667	B	0.676	B
31.	Azusa Ave at Paramount St	TS	0.611	B	0.639	B
32.	Azusa Ave at Gladstone St	TS	0.760	C	0.743	C
33.	Azusa Ave/San Gabriel Ave at 1st St	TS	0.696	B	0.672	B

Table 7
Page 2 of 2
Future Baseline With Project Intersection Levels of Service

ID	Study Intersection	Traffic Control[1]	AM Peak Hour V/C[2] or [Delay][3]	AM Peak Hour LOS[4]	PM Peak Hour V/C[2] or [Delay][3]	PM Peak Hour LOS[4]
34.	Alameda Ave/I-210 WB Ramps at 1st St	TS	0.952	E	0.704	C
	- With Mitigation	TS	0.754	C	0.644	B

Notes:

(1) TS = Traffic Signal; CSS = Cross Street Stop; AWS = All Way Stop

(2) V/C = Volume/Capacity

(3) Delay is shown in [seconds/vehicle]. Delay is reported for un-signalized study intersections. For intersections with cross street stop control, LOS is based on average delay of the worst individual lane (or movements sharing a lane).

(4) LOS = Level of Service

Table 8
Page 1 of 3
Future Baseline With Project Significant Impact Evaluation

Signalized Intersections												
	AM Peak Hour						PM Peak Hour					
	Without Project		With Project				Without Project		With Project			
ID Study Intersection	V/C[1]	LOS[2]	V/C[1]	LOS[2]	Change	Significant Impact?	V/C[1]	LOS[2]	V/C[1]	LOS[2]	Change	Significant Impact?
1. I-605 SB On-Ramp at Live Oak Ave	0.517	A	0.526	A	+0.009	No	0.783	C	0.841	D	+0.058	No
3. Graham Rd at Live Oak Ave	0.569	A	0.573	A	+0.004	No	0.569	A	0.598	A	+0.029	No
4. Rivergrade Rd at Live Oak Ave	0.587	A	0.619	B	+0.032	No	0.885	D	0.889	D	+0.004	No
5. Stewart Ave at Live Oak Ave	0.810	D	0.815	D	+0.005	No	0.765	C	0.769	C	+0.004	No
6. Baldwin Park Blvd at Live Oak Ave	0.542	A	0.547	A	+0.0	No	0.701	C	0.710	C	+0.0	No
7. Arrow Hwy at Live Oak Ave	0.628	B	0.637	B	+0.009	No	0.896	D	0.902	E	+0.006	Yes
- With Mitigation	n/a	n/a	0.518	A	-	No	n/a	n/a	0.761	C	-	No
8. Maine Ave at Arrow Hwy	0.794	C	0.798	C	+0.004	No	0.814	D	0.820	D	+0.006	No
9. Azusa Canyon Rd at Arrow Hwy	0.929	E	0.934	E	+0.005	No	0.904	E	0.915	E	+0.011	No
- With Mitigation[3]	n/a	n/a	0.757	C	-	No	n/a	n/a	0.792	C	-	No
10. 4th St at Arrow Hwy	0.346	A	0.374	A	+0.0	No	0.555	A	0.559	A	+0.0	No
11. Irwindale Ave at I-210 WB Ramps	0.463	A	0.463	A	-	No	0.540	A	0.540	A	-	No
12. Irwindale Ave at I-210 EB Ramps	0.671	B	0.687	B	+0.016	No	0.747	C	0.766	C	+0.019	No
13. Irwindale Ave at Jardin De Roca/Irwindale Rd	0.570	A	0.572	A	+0.002	No	0.697	B	0.706	C	+0.009	No
14. Irwindale Ave at 1st St	0.507	A	0.509	A	+0.002	No	0.447	A	0.461	A	+0.014	No
15. Irwindale Ave at Gladstone St	0.649	B	0.671	B	+0.022	No	0.651	B	0.654	B	+0.003	No
16. Irwindale Ave at Arrow Hwy	0.848	D	0.853	D	+0.005	No	0.761	C	0.769	C	+0.008	No
17. Vincent Ave at Gladstone St	0.525	A	0.533	A	+0.008	No	0.843	D	0.911	E	+0.068	Yes
- With Mitigation	n/a	n/a	0.529	A	-	No	n/a	n/a	0.740	C	-	No
18. Vincent Ave at Arrow Hwy	0.682	B	0.746	C	+0.064	No	0.782	C	0.865	D	+0.083	No
21. Vincent Ave at Cypress St	0.647	B	0.658	B	+0.011	No	0.726	C	0.734	C	+0.008	No
22. Vincent Ave at San Bernardino Rd	0.655	B	0.659	B	+0.004	No	0.658	B	0.679	B	+0.021	No

Table 8
Page 2 of 3
Future Baseline With Project Significant Impact Evaluation

Signalized Intersections												
	AM Peak Hour						PM Peak Hour					
	Without Project		With Project				Without Project		With Project			
ID Study Intersection	V/C[1]	LOS[2]	V/C[1]	LOS[2]	Change	Significant Impact?	V/C[1]	LOS[2]	V/C[1]	LOS[2]	Change	Significant Impact?
23. Vincent Ave at Badillo St	0.612	B	0.620	B	+0.008	No	0.763	C	0.780	C	+0.017	No
24. Vincent Ave at Puente Ave	0.581	A	0.599	A	+0.018	No	0.633	B	0.650	B	+0.017	No
25. Vincent Ave at Rowland Ave	0.539	A	0.545	A	+0.006	No	0.609	B	0.615	B	+0.006	No
26. Vincent Ave at Workman Ave	0.614	B	0.617	B	+0.003	No	0.691	B	0.693	B	+0.002	No
27. Vincent Ave at I-10 WB Ramps	0.437	A	0.458	A	+0.021	No	0.450	A	0.461	A	+0.011	No
28. Vincent Ave at I-10 EB Ramps	0.486	A	0.496	A	+0.010	No	0.541	A	0.542	A	+0.001	No
29. Vernon Ave/Lake Ellen Ave at Gladstone St	0.686	B	0.711	C	+0.025	No	0.732	C	0.752	C	+0.020	No
30. Azusa Ave at I-210 EB Ramps	0.665	B	0.667	B	+0.002	No	0.659	B	0.676	B	+0.017	No
31. Azusa Ave at Paramount St	0.592	A	0.611	B	+0.019	No	0.636	B	0.639	B	+0.003	No
32. Azusa Ave at Gladstone St	0.732	C	0.760	C	+0.028	No	0.737	C	0.743	C	+0.006	No
33. Azusa Ave/San Gabriel Ave at 1st St	0.645	B	0.696	B	+0.051	No	0.669	B	0.672	B	+0.003	No
34. Alameda Ave/I-210 WB Ramps at 1st St	0.913	E	0.952	E	+0.039	Yes	0.699	B	0.704	C	+0.005	No
- With Mitigation	n/a	n/a	0.754	C	-	No	n/a	n/a	0.644	B	-	No

Table 8
Page 3 of 3
Future Baseline With Project Significant Impact Evaluation

Unsignalized Intersections										
	AM Peak Hour					PM Peak Hour				
	With Project					With Project				
ID Intersection	[Delay][1]	LOS[2]	LOS E or F?	Traffic Signal Warranted?	Significant Impact?	[Delay][1]	LOS[2]	LOS E or F?	Traffic Signal Warranted?	Significant Impact?
2. I-605 NB On-Ramp at Live Oak Ave	[75.7]	F	Yes	Yes	Yes	[157.8]	F	Yes	Yes	Yes
- With Mitigation	0.802	D	No	n/a	No	0.792	C	No	n/a	No
19. Vincent Ave at Project North Dwy	[14.7]	B	No	n/a[4]	No	[17.3]	C	No	n/a[4]	No
20. Vincent Ave at Project South Dwy	[12.8]	B	No	n/a[4]	No	[16.2]	C	No	n/a[4]	No

Notes:

(1) V/C = Volume/Capacity; [Delay] is shown in seconds/vehicle

(2) LOS = Level of Service

(3) Previously an impact under Existing Plus Project conditions.

(4) n/a = not applicable; peak hour traffic signal warrant only evaluated for LOS E or F conditions.

Table 9
Future Baseline Plus Cumulative Projects Without Project Intersection Levels of Service

ID	Study Intersection	Traffic Control[1]	AM Peak Hour V/C[2] or [Delay][3]	AM Peak Hour LOS[4]	PM Peak Hour V/C[2] or [Delay][3]	PM Peak Hour LOS[4]
1.	I-605 SB On-Ramp at Live Oak Ave	TS	0.660	B	0.980	E
2.	I-605 NB On-Ramp at Live Oak Ave	CSS	[772.3]	F	[397.4]	F
3.	Graham Rd at Live Oak Ave	TS	0.665	B	0.682	B
4.	Rivergrade Rd at Live Oak Ave	TS	0.679	B	0.924	E
5.	Stewart Ave at Live Oak Ave	TS	0.844	D	0.806	D
6.	Baldwin Park Blvd at Live Oak Ave	TS	0.596	A	0.743	C
7.	Arrow Hwy at Live Oak Ave	TS	0.675	B	0.940	E
8.	Maine Ave at Arrow Hwy	TS	0.821	D	0.857	D
9.	Azusa Canyon Rd at Arrow Hwy	TS	0.963	E	0.943	E
10.	4th St at Arrow Hwy	TS	0.371	A	0.576	A
11.	Irwindale Ave at I-210 WB Ramps	TS	0.595	A	0.699	B
12.	Irwindale Ave at I-210 EB Ramps	TS	0.798	C	0.889	D
13.	Irwindale Ave at Jardin De Roca/Irwindale Rd	TS	0.663	B	0.811	D
14.	Irwindale Ave at 1st St	TS	0.528	A	0.485	A
15.	Irwindale Ave at Gladstone St	TS	0.686	B	0.678	B
16.	Irwindale Ave at Arrow Hwy	TS	0.885	D	0.792	C
17.	Vincent Ave at Gladstone St	TS	0.531	A	0.869	D
18.	Vincent Ave at Arrow Hwy	TS	0.774	C	0.825	D
21.	Vincent Ave at Cypress St	TS	0.653	B	0.734	C
22.	Vincent Ave at San Bernardino Rd	TS	0.660	B	0.674	B
23.	Vincent Ave at Badillo St	TS	0.616	B	0.773	C
24.	Vincent Ave at Puente Ave	TS	0.591	A	0.643	B
25.	Vincent Ave at Rowland Ave	TS	0.543	A	0.618	B
26.	Vincent Ave at Workman Ave	TS	0.616	B	0.693	B
27.	Vincent Ave at I-10 WB Ramps	TS	0.446	A	0.457	A
28.	Vincent Ave at I-10 EB Ramps	TS	0.493	A	0.545	A
29.	Vernon Ave/Lake Ellen Ave at Gladstone St	TS	0.698	B	0.742	C
30.	Azusa Ave at I-210 EB Ramps	TS	0.686	B	0.688	B
31.	Azusa Ave at Paramount St	TS	0.629	B	0.668	B
32.	Azusa Ave at Gladstone St	TS	0.758	C	0.749	C
33.	Azusa Ave/San Gabriel Ave at 1st St	TS	0.704	C	0.691	B
34.	Alameda Ave/I-210 WB Ramps at 1st St	TS	0.962	E	0.734	C

Notes:

(1) TS = Traffic Signal; CSS = Cross Street Stop; AWS = All Way Stop

(2) V/C = Volume/Capacity

(3) Delay is shown in [seconds/vehicle]. Delay is reported for un-signalized study intersections. For intersections with cross street stop control, LOS is based on average delay of the worst individual lane (or movements sharing a lane).

(4) LOS = Level of Service

Table 10
Page 1 of 2
Future Baseline Plus Cumulative Projects With Project Intersection Levels of Service

ID	Study Intersection	Traffic Control[1]	AM Peak Hour V/C[2] or [Delay][3]	AM Peak Hour LOS[4]	PM Peak Hour V/C[2] or [Delay][3]	PM Peak Hour LOS[4]
1.	I-605 SB On-Ramp at Live Oak Ave	TS	0.668	B	1.038	F
	- With Mitigation	TS	0.635	B	0.755	C
2.	I-605 NB On-Ramp at Live Oak Ave	CSS	[785.2]	F	[411.4]	F
	- With Mitigation	TS	0.969	E	0.944	E
3.	Graham Rd at Live Oak Ave	TS	0.669	B	0.711	C
4.	Rivergrade Rd at Live Oak Ave	TS	0.683	B	0.928	E
5.	Stewart Ave at Live Oak Ave	TS	0.849	D	0.810	D
6.	Baldwin Park Blvd at Live Oak Ave	TS	0.600	A	0.751	C
7.	Arrow Hwy at Live Oak Ave	TS	0.684	B	0.951	E
	- With Mitigation	TS	0.556	A	0.811	D
8.	Maine Ave at Arrow Hwy	TS	0.824	D	0.862	D
9.	Azusa Canyon Rd at Arrow Hwy	TS	0.968	E	0.953	E
	- With Mitigation	TS	0.783	C	0.828	D
10.	4th St at Arrow Hwy	TS	0.399	A	0.579	A
11.	Irwindale Ave at I-210 WB Ramps	TS	0.595	A	0.699	B
12.	Irwindale Ave at I-210 EB Ramps	TS	0.814	D	0.908	E
13.	Irwindale Ave at Jardin De Roca/Irwindale Rd	TS	0.666	B	0.828	D
14.	Irwindale Ave at 1st St	TS	0.530	A	0.502	A
15.	Irwindale Ave at Gladstone St	TS	0.708	C	0.681	B
16.	Irwindale Ave at Arrow Hwy	TS	0.891	D	0.800	C
17.	Vincent Ave at Gladstone St	TS	0.539	A	0.937	E
	- With Mitigation	TS	0.535	A	0.761	C
18.	Vincent Ave at Arrow Hwy	TS	0.838	D	0.913	E
	- With Mitigation	TS	0.838	D	0.805	D
19.	Vincent Ave at Project North Dwy	CSS	[15.0]	B	[18.4]	C
20.	Vincent Ave at Project South Dwy	CSS	[13.1]	B	[17.2]	C
21.	Vincent Ave at Cypress St	TS	0.673	B	0.742	C
22.	Vincent Ave at San Bernardino Rd	TS	0.663	B	0.695	B
23.	Vincent Ave at Badillo St	TS	0.626	B	0.791	C
24.	Vincent Ave at Puente Ave	TS	0.610	B	0.660	B
25.	Vincent Ave at Rowland Ave	TS	0.556	A	0.624	B
26.	Vincent Ave at Workman Ave	TS	0.618	B	0.696	B
27.	Vincent Ave at I-10 WB Ramps	TS	0.469	A	0.470	A
28.	Vincent Ave at I-10 EB Ramps	TS	0.503	A	0.546	A
29.	Vernon Ave/Lake Ellen Ave at Gladstone St	TS	0.723	C	0.762	C
30.	Azusa Ave at I-210 EB Ramps	TS	0.688	B	0.704	C
31.	Azusa Ave at Paramount St	TS	0.648	B	0.670	B

Table 10
Page 2 of 2
Future Baseline Plus Cumulative Projects With Project Intersection Levels of Service

ID	Study Intersection	Traffic Control[1]	AM Peak Hour V/C[2] or [Delay][3]	AM Peak Hour LOS[4]	PM Peak Hour V/C[2] or [Delay][3]	PM Peak Hour LOS[4]
32.	Azusa Ave at Gladstone St	TS	0.785	C	0.755	C
33.	Azusa Ave/San Gabriel Ave at 1st St	TS	0.727	C	0.694	B
34.	Alameda Ave/I-210 WB Ramps at 1st St	TS	1.001	F	0.740	C
	- With Mitigation	TS	0.803	D	0.679	B

Notes:
(1) TS = Traffic Signal; CSS = Cross Street Stop; AWS = All Way Stop

(2) V/C = Volume/Capacity

(3) Delay is shown in [seconds/vehicle]. Delay is reported for un-signalized study intersections. For intersections with cross street stop control, LOS is based on average delay of the worst individual lane (or movements sharing a lane).

(4) LOS = Level of Service

Table 11
Page 1 of 3

Future Baseline Plus Cumulative Projects With Project Significant Impact Evaluation

Signalized Intersections												
	AM Peak Hour						PM Peak Hour					
	Without Project		With Project				Without Project		With Project			
ID Study Intersection	V/C[1]	LOS[2]	V/C[1]	LOS[2]	Change	Significant Impact?	V/C[1]	LOS[2]	V/C[1]	LOS[2]	Change	Significant Impact?
1. I-605 SB On-Ramp at Live Oak Ave	0.660	B	0.668	B	+0.008	No	0.980	E	1.038	F	+0.058	Yes
- With Mitigation	n/a	n/a	0.635	B	-	No	n/a	n/a	0.755	C	-	No
3. Graham Rd at Live Oak Ave	0.665	B	0.669	B	+0.004	No	0.682	B	0.711	C	+0.029	No
4. Rivergrade Rd at Live Oak Ave	0.679	B	0.683	B	+0.004	No	0.924	E	0.928	E	+0.004	No
5. Stewart Ave at Live Oak Ave	0.844	D	0.849	D	+0.005	No	0.806	D	0.810	D	+0.004	No
6. Baldwin Park Blvd at Live Oak Ave	0.596	A	0.600	A	+0.0	No	0.743	C	0.751	C	+0.0	No
7. Arrow Hwy at Live Oak Ave	0.675	B	0.684	B	+0.009	No	0.940	E	0.951	E	+0.011	No
- With Mitigation[3]	n/a	n/a	0.556	A	-	No	n/a	n/a	0.811	D	-	No
8. Maine Ave at Arrow Hwy	0.821	D	0.824	D	+0.003	No	0.857	D	0.862	D	+0.005	No
9. Azusa Canyon Rd at Arrow Hwy	0.963	E	0.968	E	+0.005	No	0.943	E	0.953	E	+0.010	No
- With Mitigation[4]	n/a	n/a	0.783	C	-	No	n/a	n/a	0.828	D	-	No
10. 4th St at Arrow Hwy	0.371	A	0.399	A	+0.0	No	0.576	A	0.579	A	+0.0	No
11. Irwindale Ave at I-210 WB Ramps	0.595	A	0.595	A	-	No	0.699	B	0.699	B	-	No
12. Irwindale Ave at I-210 EB Ramps	0.798	C	0.814	D	+0.016	No	0.889	D	0.908	E	+0.019	No
13. Irwindale Ave at Jardin De Roca/Irwindale Rd	0.663	B	0.666	B	+0.003	No	0.811	D	0.828	D	+0.017	No
14. Irwindale Ave at 1st St	0.528	A	0.530	A	+0.002	No	0.485	A	0.502	A	+0.017	No
15. Irwindale Ave at Gladstone St	0.686	B	0.708	C	+0.022	No	0.678	B	0.681	B	+0.003	No
16. Irwindale Ave at Arrow Hwy	0.885	D	0.891	D	+0.006	No	0.792	C	0.800	C	+0.008	No
17. Vincent Ave at Gladstone St	0.531	A	0.539	A	+0.008	No	0.869	D	0.937	E	+0.068	Yes
- With Mitigation	n/a	n/a	0.535	A	-	No	n/a	n/a	0.761	C	-	No
18. Vincent Ave at Arrow Hwy	0.774	C	0.838	D	+0.064	No	0.825	D	0.913	E	+0.088	Yes
- With Mitigation	n/a	n/a	0.838	D	-	No	n/a	n/a	0.805	D	-	No
21. Vincent Ave at Cypress St	0.653	B	0.673	B	+0.020	No	0.734	C	0.742	C	+0.008	No

Table 11
Page 2 of 3
Future Baseline Plus Cumulative Projects With Project Significant Impact Evaluation

Signalized Intersections												
	AM Peak Hour						PM Peak Hour					
	Without Project		With Project				Without Project		With Project			
ID Study Intersection	V/C[1]	LOS[2]	V/C[1]	LOS[2]	Change	Significant Impact?	V/C[1]	LOS[2]	V/C[1]	LOS[2]	Change	Significant Impact?
22. Vincent Ave at San Bernardino Rd	0.660	B	0.663	B	+0.003	No	0.674	B	0.695	B	+0.021	No
23. Vincent Ave at Badillo St	0.616	B	0.626	B	+0.010	No	0.773	C	0.791	C	+0.018	No
24. Vincent Ave at Puente Ave	0.591	A	0.610	B	+0.019	No	0.643	B	0.660	B	+0.017	No
25. Vincent Ave at Rowland Ave	0.543	A	0.556	A	+0.013	No	0.618	B	0.624	B	+0.006	No
26. Vincent Ave at Workman Ave	0.616	B	0.618	B	+0.002	No	0.693	B	0.696	B	+0.003	No
27. Vincent Ave at I-10 WB Ramps	0.446	A	0.469	A	+0.023	No	0.457	A	0.470	A	+0.013	No
28. Vincent Ave at I-10 EB Ramps	0.493	A	0.503	A	+0.010	No	0.545	A	0.546	A	+0.001	No
29. Vernon Ave/Lake Ellen Ave at Gladstone St	0.698	B	0.723	C	+0.025	No	0.742	C	0.762	C	+0.020	No
30. Azusa Ave at I-210 EB Ramps	0.686	B	0.688	B	+0.002	No	0.688	B	0.704	C	+0.016	No
31. Azusa Ave at Paramount St	0.629	B	0.648	B	+0.019	No	0.668	B	0.670	B	+0.002	No
32. Azusa Ave at Gladstone St	0.758	C	0.785	C	+0.027	No	0.749	C	0.755	C	+0.006	No
33. Azusa Ave/San Gabriel Ave at 1st St	0.704	C	0.727	C	+0.023	No	0.691	B	0.694	B	+0.003	No
34. Alameda Ave/I-210 WB Ramps at 1st St	0.962	E	1.001	F	+0.039	Yes	0.734	C	0.740	C	+0.006	No
- With Mitigation	n/a	n/a	0.803	D	-	No	n/a	n/a	0.679	B	-	No

Table 11
Page 3 of 3

Future Baseline Plus Cumulative Projects With Project Significant Impact Evaluation

Unsignalized Intersections										
	AM Peak Hour					PM Peak Hour				
	With Project					With Project				
ID Intersection	[Delay][1]	LOS[2]	LOS E or F?	Traffic Signal Warranted?	Significant Impact?	[Delay][1]	LOS[2]	LOS E or F?	Traffic Signal Warranted?	Significant Impact?
2. I-605 NB On-Ramp at Live Oak Ave	[785.2]	F	Yes	Yes	Yes	[411.4]	F	Yes	Yes	Yes
- With Mitigation	0.969	E	Yes	n/a	No	0.944	E	Yes	n/a	No
19. Vincent Ave at Project North Dwy	[15.0]	B	No	n/a[5]	No	[18.4]	C	No	n/a[5]	No
20. Vincent Ave at Project South Dwy	[13.1]	B	No	n/a[5]	No	[17.2]	C	No	n/a[5]	No

Notes:

(1) V/C = Volume/Capacity; [Delay] is shown in seconds/vehicle

(2) LOS = Level of Service

(3) Previously an impact under Future Baseline With Project conditions.

(4) Previously an impact under Existing Plus Project conditions.

(5) n/a = not applicable; peak hour traffic signal warrant only evaluated for LOS E or F conditions.

7. FREEWAY ANALYSIS

This section presents an analysis of potential effects of the proposed Project on Caltrans facilities. This section discusses the prescribed methodology assess whether Freeway mainline or ramp analysis is required, and definition of deficiency and significant traffic impact are discussed.

DEFINITION OF DEFICIENCY AND SIGNIFICANT IMPACT

The California Department of Transportation Guide for the Preparation of Traffic Impact Studies states that an endeavor is made to maintain a target Level of Service of between "D" or better on State highway facilities; however, California Department of Transportation acknowledges that this may not always be feasible. If an existing State Highway facility is operating at less than the appropriate Level of Service, the existing Measures of Effectiveness for Level of Service should be maintained.

PROJECT THRESHOLD EVALUATION

The freeway which will experience the most project generated trips is the I-605 Freeway which is four (4) lanes in each direction and located approximately 3.3 miles west of the project site.

The Los Angeles County Congestion Management Program (2010) has been reviewed for the definition of feasible level of service for this study. The Congestion Management Program definition of deficiency is based on maintaining a Level of Service standard of Level of Service E or better, except where an existing Level of Service F condition is identified in the Congestion Management Program document.

Based on the mainline average daily traffic volume (167,000 vehicles per day) and the capacity of an eight lane State Highway as specified in the Congestion Management Program, the I-605 Freeway mainline currently operates at Levels of Service B to C during the morning and evening peak hours. The proposed development is forecast to contribute between 107 to 119 two-way trips to the study area freeway mainline or ramps during the peak hours.

CALIFORNIA DEPARTMENT OF TRANSPORTATION PERCENT OF CAPACITY THRESHOLD

The traffic impact analysis must include all freeway mainline segments and ramp terminals for which the project contributes above a certain minimum amount. Pursuant to the Freeway agreement executed in October 2013 and updated December 2015 between LADOT and California Department of Transportation - District 7, traffic studies may be required to conduct a focused freeway impact analysis if the proposed project meets any of the following criteria.[3]

- The project's peak hour trips would result in a 1% or more increase to the freeway mainline capacity of a freeway segment operating at LOS E or F; or
- The project's peak hour trips would result in a 2% or more increase to the freeway mainline capacity of a freeway segment operating at LOS D; or
- The project's peak hour trips would result in a 1% or more increase to the capacity of a freeway off-ramp operating at LOS E or F; or
- The project's peak hour trips would result in a 2% or more increase to the capacity of a freeway off-ramp operating at LOS D.

[3] Source: Traffic Study Policies & Procedures, City of Los Angeles Department of Transportation, (December 2016).

Project Trip Threshold for Freeway Analysis										
Level of Service	Volume Increase	Mainline Lane Capacity	Ramp Lane Capacity	Mainline Lanes					Ramp Lanes	
				6	5	4	3	2	2	1
D	2%	1,500	850	240	180	120	90	60	34	17
E/F	1%	1,500	850	120	90	60	45	30	17	9

CALIFORNIA DEPARTMENT OF TRANSPORTATION FREEWAY REVIEW

The project trip contribution to the freeway system is below the threshold for further analysis. The project does not contribute trips greater than 1% of freeway capacity for mainline segments or ramps with Level of Service E or F or 2% freeway capacity volume for mainline segments or ramps with Level of Service D.

8. CONGESTION MANAGEMENT PROGRAM

The Congestion Management Program uses the following criteria to determine if a proposed development requires analysis of Congestion Management Program monitored facilities:

- All CMP arterial monitoring intersections, including monitored freeway on- or off-ramp intersections, where the proposed project will add 50 or more trips during either the morning or evening weekday peak hours;
- Mainline freeway monitoring locations where the project will 150 or more trips, in either direction, during either the morning or evening weekday peak hours.

The CMP traffic impact analysis guidelines establish that a significant project impact occurs when the following threshold is exceeded:

- The proposed project increases traffic demand on a CMP facility by 2% of capacity (V/C ≥ 0.02), causing LOS F (V/C > 1.00)

If the facility is already at LOS F, a significant impact occurs when the proposed project increases traffic demand on a CMP facility by 2% of capacity (V/C ≥ 0.02).

This traffic impact analysis has evaluated key intersections to which the proposed project is forecast to contribute 50 or more peak hour trips, none of which are CMP-monitored intersections; therefore, no further CMP analysis is required.

9. VEHICLE MILES TRAVELED (VMT)

This section presents the Vehicle Miles Traveled (VMT) analysis for compliance with current CEQA guidelines.

BACKGROUND

California Senate Bill 743 (SB 743) directed the State Office of Planning and Research (OPR) to amend the California Environmental Quality Act (CEQA) Guidelines for evaluating transportation impacts to provide alternatives to Level of Service that "promote the reduction of greenhouse gas emissions, the development of multimodal transportation networks, and a diversity of land uses." In December 2018, the California Natural Resources Agency certified and adopted the updated CEQA Guidelines package. The amended CEQA Guidelines, specifically Section 15064.3, recommend the use of Vehicle Miles Travelled (VMT) as the primary metric for the evaluation of transportation impacts associated with land use and transportation projects. In general terms, VMT quantifies the amount and distance of automobile travel attributable to a project or region. All agencies and projects State-wide are required to utilize the updated CEQA guidelines recommending use of VMT for evaluating transportation impacts as of July 1, 2020.

The updated CEQA Guidelines allow for lead agency discretion in establishing methodologies and thresholds provided there is substantial evidence to demonstrate that the established procedures promote the intended goals of the legislation. Where quantitative models or methods are unavailable, Section 15064.3 allows agencies to assess VMT qualitatively using factors such as availability of transit and proximity to other destinations. The *Technical Advisory on Evaluating Transportation Impacts in CEQA* (State of California, December 2018) ["*Technical Advisory*"] provides technical considerations regarding methodologies and thresholds with a focus on office, residential, and retail developments as these projects tend to have the greatest influence on VMT.

THRESHOLD OF SIGNIFICANCE

The City of Irwindale adopted Resolution No. 2020-53-3163 in November 2020, which establishes VMT thresholds of significance for purposes of analyzing transportation impacts under CEQA. Table 12 shows the City of Irwindale VMT thresholds of significance as adopted via Resolution No. 2020-53-3163.

Since the proposed project consists of an industrial land use, the applicable VMT per service population is defined as home-base work VMT per employee. Based on the City-adopted thresholds, a "yes" to any of the following applicable criteria would indicate a significant VMT impact:

- Project Impact: Would the project-generated home-based work VMT per employee exceed a level of 15% below City of Irwindale average home-based work VMT per employee?

- Cumulative Impact: Would the project increase the total regional VMT compared to cumulative no project conditions?

- Cumulative Impact: Is the project inconsistent with the SCAG RTP/SCS (Southern California Association of Governments Regional Transportation Plan/Sustainable Communities Strategy)?

SCREENING ASSESSMENT

Since City of Irwindale VMT thresholds do not include screening criteria, the project VMT screening assessment is based on guidance from the State's *Technical Advisory* and review of draft VMT procedures for the San Gabriel Valley Council of Governments (SGVCOG). The *Technical Advisory* provides the following potential screening criteria for certain land development projects that may be presumed to result in a less than significant VMT impact:

- Local serving retail, schools, daycare, student housing, etc.
- Small projects generating less than 110 trips per day.
- Residential and office projects located in areas with low-VMT.
- Projects near transit stations or major transit stop.
- Residential projects with a high percentage of affordable housing.

For mixed-use projects, the *Technical Advisory* recommends that lead agencies can evaluate each component of a mixed-use project independently and apply the thresholds of significance for each lane use (e.g., office and retail). Alternatively, a lead agency may consider only the project's dominant use. In the analysis of each use, a project should take credit for internal capture.

Screening Assessment for Local Serving Uses

The *Technical Advisory* defines local serving retail as less than 50,000 square feet. New retail development typically redistributes shopping trips rather than creating new trips. By adding retail opportunities into the urban fabric and thereby improving proximity, local-serving retail tends to shorten trips and reduce VMT. Similarly, other local serving uses such as schools, daycare, student housing, and public facilities would typically improve the proximity of such uses within the community, thereby shortening travel distances and reducing VMT.

The proposed project does not include a retail component; therefore, this screening criteria does not apply.

Screening Assessment for Small Projects

As noted in the *Technical Advisory*, CEQA Guidelines § 15301, subdivision (e)(2) provides a categorical exemption for existing facilities, including additions to existing structures of up to 10,000 square feet, so long as the project is in an area where public infrastructure is available to allow for maximum planned development and the project is not in an environmentally sensitive area. Typical project types for which trip generation increases relatively linearly with building footprint (i.e., general office building, single tenant office building, office park, and business park) generate or attract an additional 110-124 trips per 10,000 square feet. Therefore, absent substantial evidence otherwise, it is reasonable to conclude that the addition of 110 or fewer trips could be considered not to lead to a significant impact.

Early adopters of the VMT metric are using similar or slightly higher thresholds for small projects. The Cities of Santa Ana and San Jose, for example, have adopted a screening threshold for small infill projects based on 110 daily trips. The City of Los Angeles has established a screening threshold for projects that generate fewer than 250 net daily trips. The draft guidelines by the San Diego Section of the Institute of Transportation Engineers recommends a screening threshold as high as 1,000 daily trips for projects that are consistent with a General or Community Plan or 500 daily trips for projects that are inconsistent with a General or Community Plan.

As previously shown in Table 2, the proposed project is forecast to generate more than 110 net new daily weekday trips; therefore, the proposed project does not satisfy this screening criteria.

Screening Assessment for Projects in Low VMT Areas

The *Technical Advisory* provides guidance indicating that residential and office projects located in areas with low VMT and that exhibit similar VMT-related features (e.g., density, mix of uses, transit accessibility), will typically exhibit similarly low VMT. Identifying low VMT areas requires maps to be created using VMT data from travel surveys or a travel demand model that illustrate areas that are below the established VMT threshold.

Low VMT screening was assessed using the SGVCOG VMT Evaluation Tool, which was developed by SGVCOG on behalf of member agencies, including the City of Irwindale, is based on the Southern California Association of Governments (SCAG) Regional Travel Demand Model (2016 Regional Transportation Plan Base Year 2012 data version). Based on the SGVCOG VMT Evaluation Tool, the proposed project is located in a zone that is between 0-15% below the existing baseline VMT for the City of Irwindale. Since the City's threshold of significance is 15% below the existing baseline VMT, the proposed project does not satisfy the low VMT screening criteria.

Screening Assessment for Projects Near Transit Stations

As noted in the *Technical Advisory*, CEQA Guideline Section 15064.3, subdivision (b)(1) states that lead agencies generally should presume that certain projects proposed within one-half mile of an existing major transit stop or an existing stop along a high-quality transit corridor[4] will have a less than significant impact on VMT. This presumption would not apply, however, if project-specific information indicates that the project may still generate significant levels of VMT.

Based on review of the Southern California Association of Governments (SCAG) High Quality Transit Area map for the year 2016, the proposed project is not located within one-half mile of a major transit stop or high quality transit corridor; therefore, the proposed project does not satisfy this screening criteria.

Screening Assessment for Affordable Housing

The *Technical Advisory* notes that adding affordable housing to infill locations generally improves jobs-housing match, in turn shortening commutes and reducing VMT. In areas where existing jobs-housing match is closer to optimal, lower income housing nevertheless generates less VMT than market-rate housing. Therefore, a project consisting of a high percentage of affordable housing may be a basis for the lead agency to find a less-than-significant impact on VMT. Evidence supports a presumption of less than significant impact for a 100 percent affordable residential development (or the residential component of a mixed-use development) in infill locations. Lead agencies may develop their own presumption of less than significant impact for residential projects containing a particular amount of affordable housing, based on local circumstances and evidence. Furthermore, a project which includes any affordable residential units may factor the effect of the affordability on VMT into the assessment of VMT generated by those units.

The proposed project does not contain an affordable housing component; therefore, this screening criteria does not apply.

VMT ANALYSIS

Since the proposed project does not satisfy any of the screening criteria, a detailed VMT analysis for the project was performed using the SGVCOG VMT Evaluation Tool. The SGVCOG VMT Evaluation Tool was developed using data from the SCAG Regional Travel Demand Model (2016 Regional Transportation Plan Base Year 2012 data version). The project site is located in Assessor's Parcel Numbers 8417-034-015 and 8417-034-016 both of which are located in Traffic Analysis Zone (TAZ) 22307100. A baseline year of 2020 was used for the analysis. The SGVCOG VMT Evaluation Tool report is provided in Appendix F.

- *Project Impact: Would the project-generated home-based work VMT per employee exceed a level of 15% below City of Irwindale average home-based work VMT per employee?*

  The project would result in less than significant project VMT impact with mitigation. Based on the SGVCOG VMT Evaluation Tool, the average City of Irwindale VMT for the 2020 baseline year is 22.51 home-based work VMT per employee. Accordingly, a project impact would be significant if the project-

[4] Pub. Resources Code, § 21155 ("For purposes of this section, a high-quality transit corridor means a corridor with fixed route bus service with service intervals no longer than 15 minutes during peak commute hours.").

generated home-based work VMT per employee exceeds 19.13. As shown in the SGVCOG VMT Evaluation Tool report (see Appendix F), the project-generated home-based work VMT per employee is equal to 21.72. Therefore, the proposed project would exceed the City-established threshold without mitigation. With implementation of the proposed Mitigation Measure VMT-1 as described in the following section, the project-generated home-based work VMT per employee is equal to 17.38. Therefore, the proposed project would result in no significant project VMT impact with implementation of Mitigation Measure VMT-1.

- *Cumulative Impact: Would the project increase the total regional VMT compared to cumulative no project conditions?*

  The project would result in a less than significant cumulative VMT impact with mitigation. The State's *Technical Advisory* notes that a project's cumulative impacts are based on an assessment of whether the *""incremental effects of an individual project are considerable when viewed in connection with the effects of past projects, the effects of other current projects, and the effects of probable future projects." (Pub. Resources Code, § 21083, subd. (b)(2); see CEQA Guidelines, § 15064, subd. (h)(1).)"* The *Technical Advisory* further clarifies that a project that falls below an efficiency-based threshold (such as VMT per employee) that is aligned with long-term environmental goals and relevant plans would have no cumulative impact distinct from the project impact. Accordingly, a finding of a less than significant project impact would imply a less than significant cumulative impact, and vice versa. Since the project is forecast to generate VMT that is 15% below the City of Irwindale average, the project would not increase the total regional VMT. Therefore, the proposed project would result in no significant cumulative VMT impact with implementation of Mitigation Measure VMT-1.

- *Cumulative Impact: Is the project inconsistent with the SCAG RTP/SCS (Southern California Association of Governments Regional Transportation Plan/Sustainable Communities Strategy)?*

  The project would result in a less than significant cumulative VMT impact. The SCAG 2020-2045 RTP/SCS, also known as Connect SoCal, was developed with input from all 197 local jurisdictions, including the City of Irwindale. The information used to develop the RTP/SCS includes the current land use, socio-economic demographics, and sustainability practices and is documented in a Data Map/Book[5] for each jurisdiction. The Data Map/Book illustrates that the project site is designated as "Industrial" land use in the 2016 SCAG Land Use Codes. Therefore, the proposed project is consistent with the SCAG RTP/SCS.

VMT MITIGATION MEASURES

To mitigate the project VMT impacts to a less than significant level, the following mitigation measure is proposed:

Mitigation Measure VMT-1
The project employer shall be required to provide general commute benefits to employees, which may include financial subsidies or pre-tax deductions for transit, carpooling, and vanpooling activities. All employees shall be eligible for alternative transportation benefits.

The strategy's evidence is from a study that contains several case studies on the influence of commuter benefits on employee travel.[6] The one most fitting for this category is that travel impacts are affected by the magnitude of the benefit and the quality of travel options available. Mode shifts tend to be greatest if current transit use is low. In New York City, where transit commute rates are already high, transit benefits only increased transit use 16% to 23%, while in Philadelphia, transit commuting increased 32%. Similarly, only 30%

[5] *Connect SoCal: The 2020-2045 Regional Transportation Plan/Sustainable Communities Strategy Local Input & Envisioning Process Data Map/Book for the City of Irwindale* (Southern California Association of Governments, November 2019).
[6] Litman, Todd. 2017. *Understanding Transport Demands and Elasticities*. Victoria Transport Policy Institute (VTPI).

of employees who received transit benefits who work in San Francisco increased their transit use, while 44% of those in other parts of the region commuted by transit more. The 44% figure was used in the SGVCOG VMT Evaluation Tool and an assumption was made of a one-to-one relationship between increased transit use and reduced commute VMT. The reduction in VMT was calculated using the following formula:

% VMT reduction = % reduction in commute VMT x % of employees eligible for benefits

As shown in the SGVCOG VMT Evaluation Tool Report (see Appendix F), the project-generated home-based work VMT per employee is equal to 17.38 with implementation of the proposed Mitigation Measure VMT-1, which does not exceed the City-established threshold of 15% below the City of Irwindale average, or 19.13 home-based work VMT per employee; therefore, the proposed project would result in less than significant VMT impact with mitigation.

Table 12
City of Irwindale VMT Thresholds of Significance

Project Type	Thresholds
Land Use Plan	1. Project Impact: A significant impact would occur if the VMT rate for the plan would exceed a level of 15% below the applicable baseline VMT rate. 2. Cumulative Project Effect: A significant impact would occur if the project increases total regional VMT compared to cumulative no project conditions.
Land Use Project	1. Project Impact: A significant impact would occur if the VMT rate for the project would exceed a level of 15% below the applicable baseline VMT rate. 2. Cumulative Project Effect: A significant impact would occur if the project increases total regional VMT compared to cumulative no project conditions.
Retail Project (over 50,000 square feet)	1. Project Impact: A significant impact would occur if the VMT rate for the project would exceed a level of 15% below the applicable baseline VMT rate. 2. Cumulative Project Effect: A significant impact would occur if the project increases total VMT in the study area compared to baseline conditions.
Transportation Project	A significant impact would occur if the project causes a net increase in total regional VMT compared to baseline conditions, opening year no project conditions, or cumulative no project conditions.
All land use and transportation projects	A significant impact would occur if the project is inconsistent with the RTP/SCS (SCAG Regional Transportation Plan/Sustainable Communities Strategy).

Notes:
(1) The baseline VMT rate is defined as the City of Irwindale average VMT rate per applicable service population.
(2) The baseline VMT is subject to change pending updates to the SCAG RTP model.

10. MITIGATION MEASURES

This section summarizes the mitigation measures identified in previous sections and calculates the project trip contribution percentage of new trips at each study intersection for which mitigation measures have been identified.

SUMMARY OF LEVEL OF SERVICE MITIGATION MEASURES (NON-CEQA)

The following mitigation measures are recommended for Future Baseline Plus Cumulative Projects With Project traffic conditions:

- Mitigation Measure #1: I-605 Freeway SB On-Ramp/ Live Oak Avenue - #1
  - Construct an additional left-turn lane at the westbound approach. Construct a receiving lane on the southern leg.

- Mitigation Measure #2A-2D: I-605 Freeway NB Ramps/Live Oak Avenue - #2
  - Install a traffic signal.
  - Construct an additional right-turn lane at the northbound approach.
  - Construct an additional right-turn lane at the southbound approach.
  - Re-stripe to create an additional through lane at the westbound approach.

- Mitigation Measure #7A-7B: Arrow Highway/Live Oak Avenue - #7
  - Re-stripe to create an additional through lane at the eastbound approach.
  - Re-stripe to create an additional through lane at the westbound approach.

- Mitigation Measure #9A-9B: Azusa Canyon Road/Arrow Highway - #9
  - Re-stripe to create a shared through/right-turn lane at the eastbound approach.
  - Re-stripe to create a shared through-right-turn lane at the westbound approach.

- Mitigation Measure #17: Vincent Avenue/Gladstone Street - #17
  - Re-stripe to create a shared left-turn/through/right-turn lane at the northbound approach.

- Mitigation Measure #18: Vincent Avenue/Arrow Highway - #18
  - Re-stripe to create a shared through/right-turn lane at the eastbound approach.

- Mitigation Measure #34A-34B: Alameda Avenue/I-210 WB Ramps/1st Street - #34
  - Restripe the westbound approach to consist of two left turn lanes, one through lane, and one right turn lane
  - Modify signalization as necessary to accommodate east-west protected signal phasing, including necessary signal poles, mast arms, and signal heads.

Project Fair Share Contribution

Table 13 shows the project fair share percentage of new traffic at the significantly impact intersections for which mitigation measure improvements have been identified. The project fair share is based on the proportion of project peak hour traffic contributed to the improvement location relative to the total new peak hour traffic volume. The project fair share shown is intended only for the discussion purposes of this traffic impact analysis and does not imply any legal responsibility or formula for contributions or mitigation.

SUMMARY OF VMT MITIGATION MEASURES (CEQA)

To mitigate the project VMT impacts to a less than significant level, the following mitigation measure is proposed:

Mitigation Measure VMT-1
The project employer shall be required to provide general commute benefits to employees, which may include financial subsidies or pre-tax deductions for transit, carpooling, and vanpooling activities. All employees shall be eligible for alternative transportation benefits.

Table 13
Project Fair Share Contribution

Intersection	Peak Hour	Existing Traffic Volume	Project Trips	Existing Plus Project Traffic Volume	Project Fair Share %
I-605 SB On-Ramp at Live Oak Ave	Morning	2,242	14	2,256	0.6%
	Evening	3,604	93	3,697	2.5%
I-605 NB On-Ramp at Live Oak Ave	Morning	2,368	119	2,487	4.8%
	Evening	3,100	107	3,207	3.3%
Arrow Hwy at Live Oak Ave	Morning	3,991	143	4,134	3.5%
	Evening	4,143	129	4,272	3.0%
Azusa Canyon Rd at Arrow Hwy	Morning	3,585	152	3,737	4.1%
	Evening	3,103	137	3,240	4.2%
Vincent Ave at Gladstone St	Morning	1,829	188	2,017	9.3%
	Evening	2,063	168	2,231	7.5%
Vincent Ave at Arrow Hwy	Morning	2,711	379	3,090	12.3%
	Evening	3,380	341	3,721	9.2%
Alameda Ave/I-210 WB Ramps at 1st St	Morning	2,073	59	2,132	2.8%
	Evening	2,011	8	2,019	0.4%

11. CONCLUSIONS

CIRCULATION RECOMMENDATIONS

Site-specific circulation and access recommendations are depicted on Figure 26.

Construct Vincent Avenue along the project site frontage at its ultimate half-section width, including landscaping and parkway improvements in conjunction with development, or as required by the City of Irwindale.

The site shall provide sufficient parking spaces to meet City of Irwindale parking code requirements in order to service on-site parking demand.

Sight distance at project access driveways should comply with applicable City of Irwindale/California Department of Transportation sight distance standards. The final grading, landscaping, and street improvement plans shall demonstrate that sight distance standards are met. Such plans must be reviewed by the City and approved as consistent with this measure prior to issue of grading permits.

On-site traffic signing and striping should be implemented in conjunction with detailed construction plans for the project. On-site traffic control plans shall comply with the California Manual of Uniform Traffic Control Devices (2014).

As is the case for any roadway design, the City of Irwindale should periodically review traffic operations in the vicinity of the project once the project is constructed to assure that the traffic operations are satisfactory.

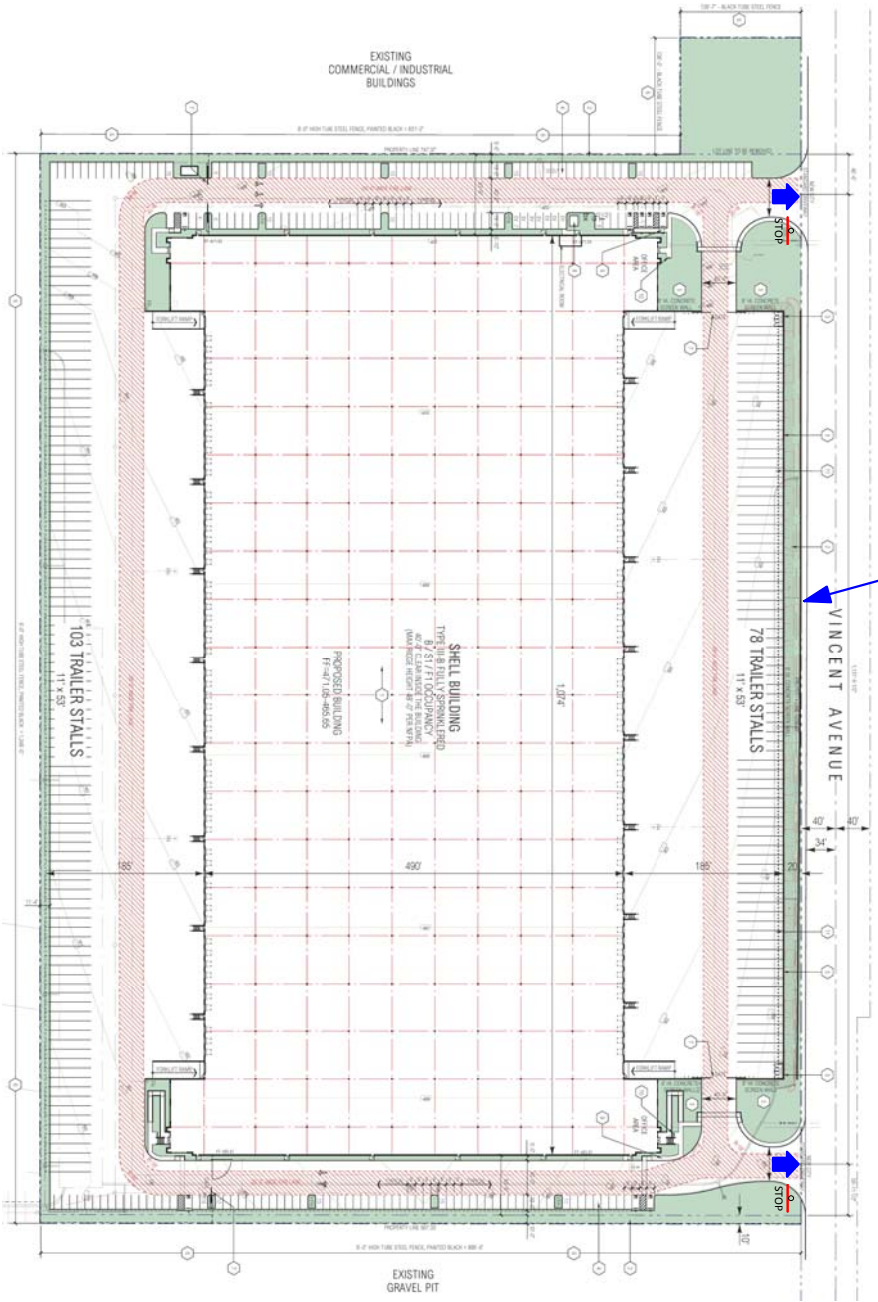

Construct Vincent Avenue along the project site frontage at its ultimate half-section width, including landscaping and parkway improvements in conjunction with development, or as required by the City of Irwindale.

The site shall provide sufficient parking spaces to meet City of Irwindale parking code requirements in order to service on-site parking demand.

Sight distance at project access driveways should comply with applicable City of Irwindale/California Department of Transportation sight distance standards. The final grading, landscaping, and street improvement plans shall demonstrate that sight distance standards are met. Such plans must be reviewed by the City and approved as consistent with this measure prior to issue of grading permits.

On-site traffic signing and striping should be implemented in conjunction with detailed construction plans for the project. On-site traffic control plans shall comply with the California Manual of Uniform Traffic Control Devices (2014).

As is the case for any roadway design, the City of Irwindale should periodically review traffic operations in the vicinity of the project once the project is constructed to assure that the traffic operations are satisfactory.

N

Legend
STOP Stop Sign
Full Access Driveway

Figure 26
Circulation Recommendations

APPENDICES

Appendix A Glossary

Appendix B Volume Count Worksheets

Appendix C Level of Service Worksheets

Appendix D Other Development Data

Appendix E Traffic Signal Warrant Worksheets

Appendix F SGVCOG VMT Evaluation Tool Report

APPENDIX A

GLOSSARY

GLOSSARY OF TERMS

ACRONYMS

AC	Acres
ADT	Average Daily Traffic
Caltrans	California Department of Transportation
DU	Dwelling Unit
ICU	Intersection Capacity Utilization
LOS	Level of Service
TSF	Thousand Square Feet
V/C	Volume/Capacity
VMT	Vehicle Miles Traveled

TERMS

AVERAGE DAILY TRAFFIC: The average 24-hour volume for a stated period divided by the number of days in that period. For example, Annual Average Daily Traffic is the total volume during a year divided by 365 days.

BANDWIDTH: The number of seconds of green time available for through traffic in a signal progression.

BOTTLENECK: A point of constriction along a roadway that limits the amount of traffic that can proceed downstream from its location.

CAPACITY: The maximum number of vehicles that can be reasonably expected to pass over a given section of a lane or a roadway in a given time period.

CHANNELIZATION: The separation or regulation of conflicting traffic movements into definite paths of travel by the use of pavement markings, raised islands, or other suitable means to facilitate the safe and orderly movements of both vehicles and pedestrians.

CLEARANCE INTERVAL: Nearly same as yellow time. If there is an all red interval after the end of a yellow, then that is also added into the clearance interval.

CONTROL DELAY: The component of delay, typically expressed in seconds per vehicle, resulting from the type of traffic control at an intersection. Control delay is measured by comparison with the uncontrolled condition; it includes delay incurred by slowing down, stopping/waiting, and speeding up.

CORDON: An imaginary line around an area across which vehicles, persons, or other items are counted (in and out).

CORNER SIGHT DISTANCE: The minimum sight distance required by the driver of a vehicle to cross or enter the lanes of the major roadway without requiring approaching traffic travelling at a given speed to radically alter their speed or trajectory. Corner sight distance is measured from the driver's eye at 42 inches above the pavement to an object height of 36 inches above the pavement in the center of the nearest approach lane.

CYCLE LENGTH: The time period in seconds required for a traffic signal to complete one full cycle of indications.

CUL-DE-SAC: A local street open at one end only and with special provisions for turning around.

DAILY CAPACITY: A theoretical value representing the daily traffic volume that will typically result in a peak hour volume equal to the capacity of the roadway.

DELAY: The time consumed while traffic is impeded in its movement by some element over which it has no control, usually expressed in seconds per vehicle.

DEMAND RESPONSIVE SIGNAL: Same as traffic-actuated signal.

DENSITY: The number of vehicles occupying in a unit length of the through traffic lanes of a roadway at any given instant. Usually expressed in vehicles per mile.

DETECTOR: A device that responds to a physical stimulus and transmits a resulting impulse to the signal controller.

DESIGN SPEED: A speed selected for purposes of design. Features of a highway, such as curvature, superelevation, and sight distance (upon which the safe operation of vehicles is dependent) are correlated to design speed.

DIRECTIONAL SPLIT: The percent of traffic in the peak direction at any point in time.

DIVERSION: The rerouting of peak hour traffic to avoid congestion.

FORCED FLOW: Opposite of free flow.

FREE FLOW: Volumes are well below capacity. Vehicles can maneuver freely and travel is unimpeded by other traffic.

GAP: Time or distance between successive vehicles in a traffic stream, rear bumper to front bumper.

HEADWAY: Time or distance spacing between successive vehicles in a traffic stream, front bumper to front bumper.

INTERCONNECTED SIGNAL SYSTEM: A number of intersections that are connected to achieve signal progression.

LEVEL OF SERVICE: A qualitative measure of a number of factors, which include speed and travel time, traffic interruptions, freedom to maneuver, safety, driving comfort and convenience, and operating costs.

LOOP DETECTOR: A vehicle detector consisting of a loop of wire embedded in the roadway, energized by alternating current and producing an output circuit closure when passed over by a vehicle.

MINIMUM ACCEPTABLE GAP: Smallest time headway between successive vehicles in a traffic stream into which another vehicle is willing and able to cross or merge.

MULTI-MODAL: More than one mode; such as automobile, bus transit, rail rapid transit, and bicycle transportation modes.

OFFSET: The time interval in seconds between the beginning of green at one intersection and the beginning of green at an adjacent intersection.

PLATOON: A closely grouped component of traffic that is composed of several vehicles moving, or standing ready to move, with clear spaces ahead and behind.

PASSENGER CAR EQUIVALENT (PCE): A metric used to assess the impact of larger vehicles, such as trucks, recreational vehicles, and buses, by converting the traffic volume of larger vehicles to an equivalent number of passenger cars.

PEAK HOUR: The 60 consecutive minutes with the highest number of vehicles.

PRETIMED SIGNAL: A type of traffic signal that directs traffic to stop and go on a predetermined time schedule without regard to traffic conditions. Also, fixed time signal.

PROGRESSION: A term used to describe the progressive movement of traffic through several signalized intersections.

QUEUE: The number of vehicles waiting at a service area such as a traffic signal, stop sign, or access gate.

QUEUE LENGTH: The length of vehicle queue, typically expressed in feet, waiting at a service area such as a traffic signal, stop sign, or access gate.

SCREEN-LINE: An imaginary line or physical feature across which all trips are counted, normally to verify the validity of mathematical traffic models.

SHARED/RECIPROCAL PARKING AGREEMENT: A written binding document executed between property owners to provide a designated number of off-street parking stalls within a designated area to be available for specified businesses or land uses.

SIGHT DISTANCE: The continuous length of roadway visible to a driver or roadway user.

SIGNAL CYCLE: The time period in seconds required for one complete sequence of signal indications.

SIGNAL PHASE: The part of the signal cycle allocated to one or more traffic movements.

STACKING DISTANCE: The length of area available behind a service area, such as a traffic signal or gate, for vehicle queueing to occur.

STARTING DELAY: The delay experienced in initiating the movement of queued traffic from a stop to an average running speed through an intersection.

STOPPING SIGHT DISTANCE: The minimum distance required by the driver of a vehicle on the major roadway travelling at a given speed to bring the vehicle to a stop after an object on the road becomes visible. Stopping sight distance is measured from the driver's eye at 42 inches above the pavement to an object height of 6 inches above the pavement.

TRAFFIC-ACTUATED SIGNAL: A type of traffic signal that directs traffic to stop and go in accordance with the demands of traffic, as registered by the actuation of detectors.

TRIP: The movement of a person or vehicle from one location (origin) to another (destination). For example, from home to store to home is two trips, not one.

TRIP-END: One end of a trip at either the origin or destination (i.e., each trip has two trip-ends). A trip-end occurs when a person, object, or message is transferred to or from a vehicle.

TRIP GENERATION RATE: The quantity of trips produced and/or attracted by a specific land use stated in terms of units such as per dwelling, per acre, and per 1,000 square feet of floor space.

TRUCK: A vehicle having dual tires on one or more axles, or having more than two axles.

TURNING RADIUS: The circular arc formed by the smallest turning path radius of the front outside tire of a vehicle, such as that performed by a U-turn maneuver. This is based on the length and width of the wheel base as well as the steering mechanism of the vehicle.

UNBALANCED FLOW: Heavier traffic flow in one direction than the other. On a daily basis, most facilities have balanced flow. During the peak hours, flow is seldom balanced in an urban area.

VEHICLE MILES OF TRAVEL: A measure of the amount of usage of a section of highway, obtained by multiplying the average daily traffic by length of facility in miles.

APPENDIX B

VOLUME COUNT WORKSHEETS

Counts Unlimited
PO Box 1178
Corona, CA 92878
(951) 268-6268

City of Irwindale
N/S: I-605 Southbound On Ramp
E/W: Live Oak Avenue
Weather: Clear

File Name : 07_IRW_605S On Lo AM
Site Code : 05117783
Start Date : 11/28/2017
Page No : 1

Groups Printed- Passenger Vehicles - Large 2 Axle Vehicles - 3 Axle Vehicles - 4+ Axle Trucks

	Live Oak Avenue Westbound				I-605 Southbound On Ramp Northbound				Live Oak Avenue Eastbound						
Start Time	Left	Thru	RTOR	App. Total	Left	Right	RTOR	App. Total	Thru	Right	RTOR	App. Total	Exclu. Total	Inclu. Total	Int. Total
07:00 AM	159	283	0	442	0	0	0	0	64	85	0	149	0	591	591
07:15 AM	117	277	0	394	0	0	0	0	53	114	0	167	0	561	561
07:30 AM	115	256	0	371	0	0	0	0	68	84	0	152	0	523	523
07:45 AM	130	278	0	408	0	0	0	0	95	64	0	159	0	567	567
Total	521	1094	0	1615	0	0	0	0	280	347	0	627	0	2242	2242
08:00 AM	106	260	0	366	0	0	0	0	89	90	0	179	0	545	545
08:15 AM	86	260	0	346	0	0	0	0	96	86	0	182	0	528	528
08:30 AM	96	227	0	323	0	0	0	0	85	97	0	182	0	505	505
08:45 AM	118	211	0	329	0	0	0	0	76	116	0	192	0	521	521
Total	406	958	0	1364	0	0	0	0	346	389	0	735	0	2099	2099
Grand Total	927	2052	0	2979	0	0	0	0	626	736	0	1362	0	4341	4341
Apprch %	31.1	68.9			0	0			46	54					
Total %	21.4	47.3		68.6	0	0		0	14.4	17		31.4	0	100	
Passenger Vehicles	674	1836		2510	0	0		0	583	586		1169	0	0	3679
% Passenger Vehicles	72.7	89.5	0	84.3	0	0	0	0	93.1	79.6	0	85.8	0	0	84.8
Large 2 Axle Vehicles	70	92		162	0	0		0	26	40		66	0	0	228
% Large 2 Axle Vehicles	7.6	4.5	0	5.4	0	0	0	0	4.2	5.4	0	4.8	0	0	5.3
3 Axle Vehicles	65	48		113	0	0		0	6	42		48	0	0	161
% 3 Axle Vehicles	7	2.3	0	3.8	0	0	0	0	1	5.7	0	3.5	0	0	3.7
4+ Axle Trucks	118	76		194	0	0		0	11	68		79	0	0	273
% 4+ Axle Trucks	12.7	3.7	0	6.5	0	0	0	0	1.8	9.2	0	5.8	0	0	6.3

	Live Oak Avenue Westbound			I-605 Southbound On Ramp Northbound			Live Oak Avenue Eastbound			
Start Time	Left	Thru	App. Total	Left	Right	App. Total	Thru	Right	App. Total	Int. Total
Peak Hour Analysis From 07:00 AM to 08:45 AM - Peak 1 of 1										
Peak Hour for Entire Intersection Begins at 07:00 AM										
07:00 AM	**159**	**283**	**442**	0	0	0	64	85	149	**591**
07:15 AM	117	277	394	0	0	0	53	**114**	**167**	561
07:30 AM	115	256	371	0	0	0	68	84	152	523
07:45 AM	130	278	408	0	0	0	**95**	64	159	567
Total Volume	521	1094	1615	0	0	0	280	347	627	2242
% App. Total	32.3	67.7		0	0		44.7	55.3		
PHF	.819	.966	.913	.000	.000	.000	.737	.761	.939	.948

Counts Unlimited
PO Box 1178
Corona, CA 92878
(951) 268-6268

City of Irwindale
N/S: I-605 Southbound On Ramp
E/W: Live Oak Avenue
Weather: Clear

File Name : 07_IRW_605S On Lo AM
Site Code : 05117783
Start Date : 11/28/2017
Page No : 2

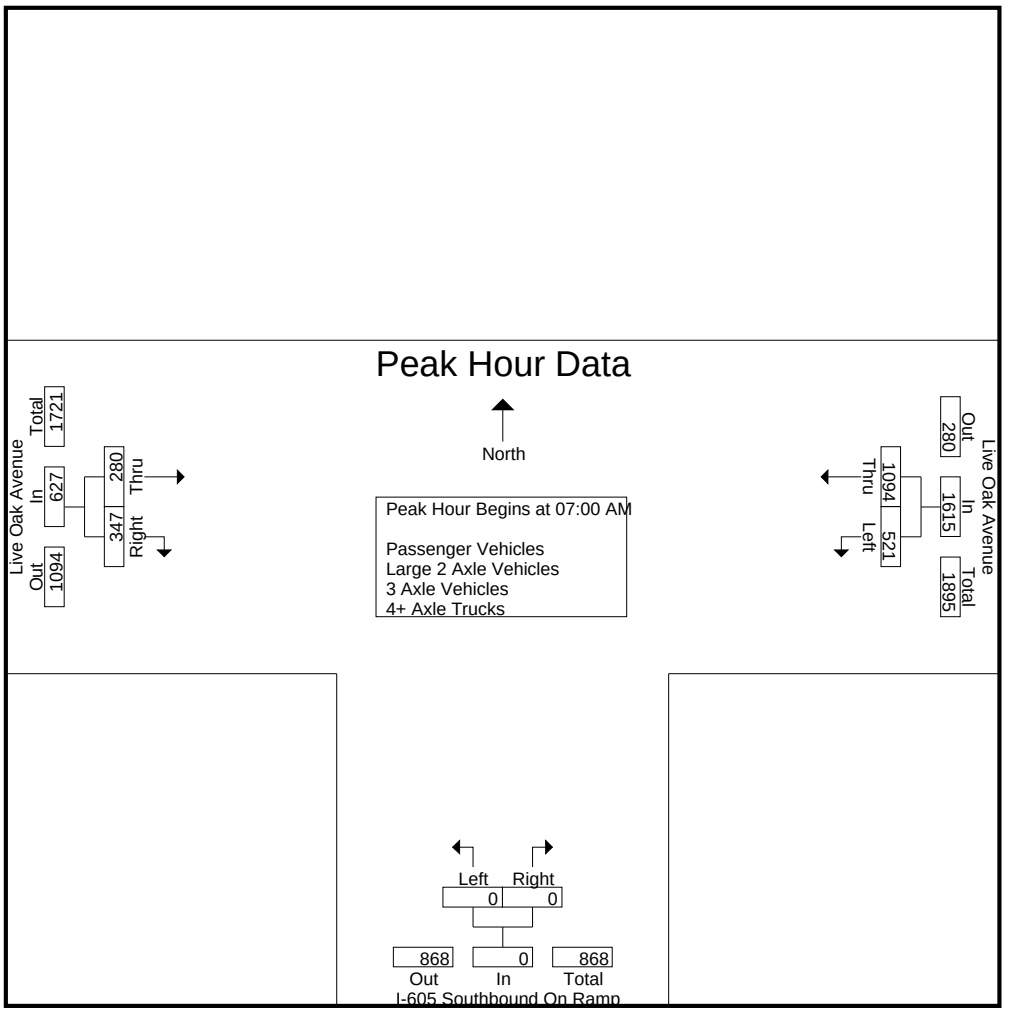

Peak Hour Analysis From 07:00 AM to 08:45 AM - Peak 1 of 1
Peak Hour for Each Approach Begins at:

	07:00 AM			07:00 AM			08:00 AM		
+0 mins.	**159**	**283**	**442**	0	0	0	89	90	179
+15 mins.	117	277	394	0	0	0	**96**	86	182
+30 mins.	115	256	371	0	0	0	85	97	182
+45 mins.	130	278	408	0	0	0	76	**116**	**192**
Total Volume	521	1094	1615	0	0	0	346	389	735
% App. Total	32.3	67.7		0	0		47.1	52.9	
PHF	.819	.966	.913	.000	.000	.000	.901	.838	.957

Counts Unlimited
PO Box 1178
Corona, CA 92878
(951) 268-6268

City of Irwindale
N/S: I-605 Southbound On Ramp
E/W: Live Oak Avenue
Weather: Clear

File Name : 07_IRW_605S On Lo AM
Site Code : 05117783
Start Date : 11/28/2017
Page No : 1

Groups Printed- Passenger Vehicles

	Live Oak Avenue Westbound				I-605 Southbound On Ramp Northbound				Live Oak Avenue Eastbound						
Start Time	Left	Thru	RTOR	App. Total	Left	Right	RTOR	App. Total	Thru	Right	RTOR	App. Total	Exclu. Total	Inclu. Total	Int. Total
07:00 AM	127	262	0	389	0	0	0	0	59	64	0	123	0	512	512
07:15 AM	91	246	0	337	0	0	0	0	47	93	0	140	0	477	477
07:30 AM	88	230	0	318	0	0	0	0	65	63	0	128	0	446	446
07:45 AM	95	253	0	348	0	0	0	0	91	50	0	141	0	489	489
Total	401	991	0	1392	0	0	0	0	262	270	0	532	0	1924	1924
08:00 AM	78	233	0	311	0	0	0	0	83	73	0	156	0	467	467
08:15 AM	62	235	0	297	0	0	0	0	87	74	0	161	0	458	458
08:30 AM	55	197	0	252	0	0	0	0	81	77	0	158	0	410	410
08:45 AM	78	180	0	258	0	0	0	0	70	92	0	162	0	420	420
Total	273	845	0	1118	0	0	0	0	321	316	0	637	0	1755	1755
Grand Total	674	1836	0	2510	0	0	0	0	583	586	0	1169	0	3679	3679
Apprch %	26.9	73.1			0	0			49.9	50.1					
Total %	18.3	49.9		68.2	0	0		0	15.8	15.9		31.8	0	100	

	Live Oak Avenue Westbound			I-605 Southbound On Ramp Northbound			Live Oak Avenue Eastbound			
Start Time	Left	Thru	App. Total	Left	Right	App. Total	Thru	Right	App. Total	Int. Total
Peak Hour Analysis From 07:00 AM to 07:45 AM - Peak 1 of 1										
Peak Hour for Entire Intersection Begins at 07:00 AM										
07:00 AM	**127**	**262**	**389**	0	0	0	59	64	123	**512**
07:15 AM	91	246	337	0	0	0	47	**93**	140	477
07:30 AM	88	230	318	0	0	0	65	63	128	446
07:45 AM	95	253	348	0	0	0	**91**	50	**141**	489
Total Volume	401	991	1392	0	0	0	262	270	532	1924
% App. Total	28.8	71.2		0	0		49.2	50.8		
PHF	.789	.946	.895	.000	.000	.000	.720	.726	.943	.939

Counts Unlimited
PO Box 1178
Corona, CA 92878
(951) 268-6268

City of Irwindale
N/S: I-605 Southbound On Ramp
E/W: Live Oak Avenue
Weather: Clear

File Name : 07_IRW_605S On Lo AM
Site Code : 05117783
Start Date : 11/28/2017
Page No : 2

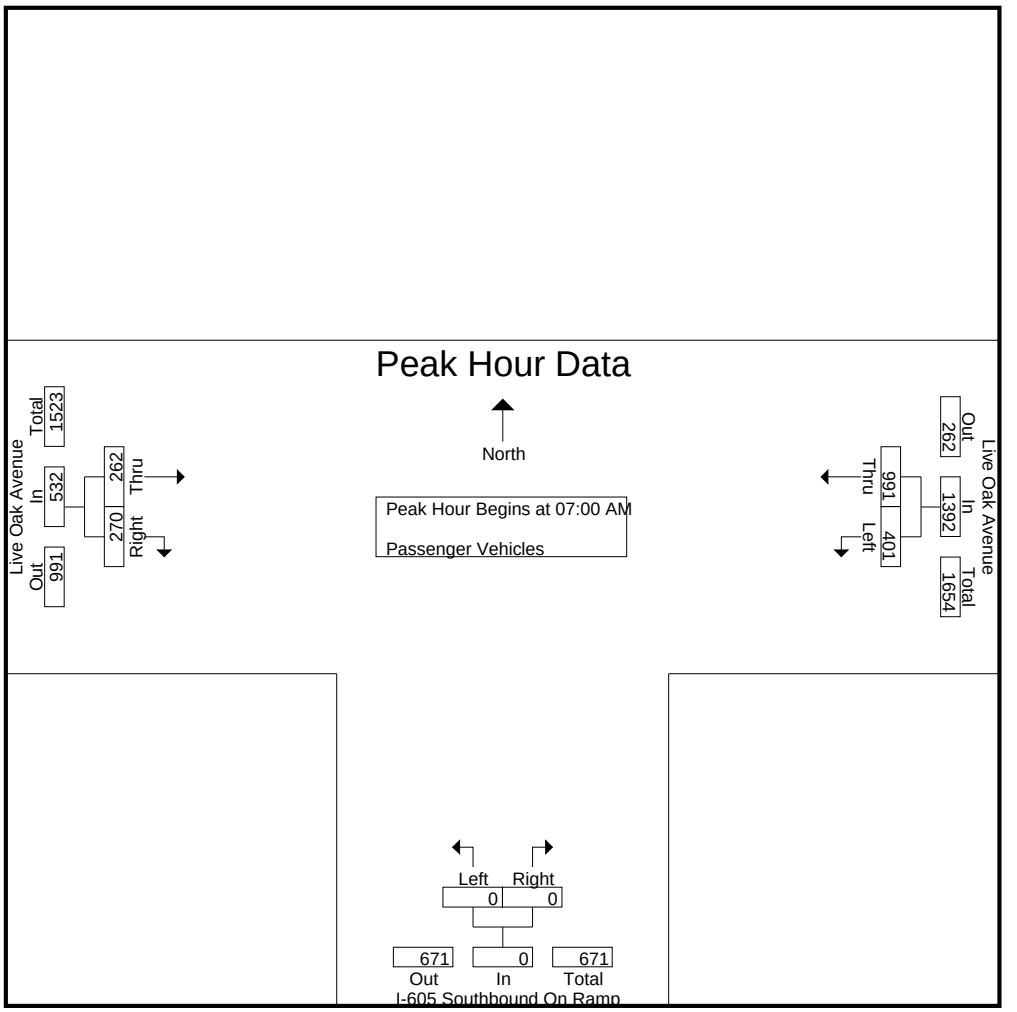

Peak Hour Analysis From 07:00 AM to 07:45 AM - Peak 1 of 1
Peak Hour for Each Approach Begins at:

	07:00 AM			07:00 AM			07:00 AM		
+0 mins.	**127**	**262**	**389**	0	0	0	59	64	123
+15 mins.	91	246	337	0	0	0	47	**93**	140
+30 mins.	88	230	318	0	0	0	65	63	128
+45 mins.	95	253	348	0	0	0	**91**	50	**141**
Total Volume	401	991	1392	0	0	0	262	270	532
% App. Total	28.8	71.2		0	0		49.2	50.8	
PHF	.789	.946	.895	.000	.000	.000	.720	.726	.943

Counts Unlimited
PO Box 1178
Corona, CA 92878
(951) 268-6268

City of Irwindale
N/S: I-605 Southbound On Ramp
E/W: Live Oak Avenue
Weather: Clear

File Name : 07_IRW_605S On Lo AM
Site Code : 05117783
Start Date : 11/28/2017
Page No : 1

Groups Printed- Large 2 Axle Vehicles

	Live Oak Avenue Westbound				I-605 Southbound On Ramp Northbound				Live Oak Avenue Eastbound						
Start Time	Left	Thru	RTOR	App. Total	Left	Right	RTOR	App. Total	Thru	Right	RTOR	App. Total	Exclu. Total	Inclu. Total	Int. Total
07:00 AM	11	5	0	16	0	0	0	0	4	6	0	10	0	26	26
07:15 AM	6	16	0	22	0	0	0	0	4	4	0	8	0	30	30
07:30 AM	12	12	0	24	0	0	0	0	1	4	0	5	0	29	29
07:45 AM	11	17	0	28	0	0	0	0	3	6	0	9	0	37	37
Total	40	50	0	90	0	0	0	0	12	20	0	32	0	122	122
08:00 AM	5	6	0	11	0	0	0	0	3	3	0	6	0	17	17
08:15 AM	7	14	0	21	0	0	0	0	6	2	0	8	0	29	29
08:30 AM	7	11	0	18	0	0	0	0	1	8	0	9	0	27	27
08:45 AM	11	11	0	22	0	0	0	0	4	7	0	11	0	33	33
Total	30	42	0	72	0	0	0	0	14	20	0	34	0	106	106
Grand Total	70	92	0	162	0	0	0	0	26	40	0	66	0	228	228
Apprch %	43.2	56.8			0	0			39.4	60.6					
Total %	30.7	40.4		71.1	0	0		0	11.4	17.5		28.9	0	100	

	Live Oak Avenue Westbound			I-605 Southbound On Ramp Northbound			Live Oak Avenue Eastbound			
Start Time	Left	Thru	App. Total	Left	Right	App. Total	Thru	Right	App. Total	Int. Total
Peak Hour Analysis From 07:00 AM to 07:45 AM - Peak 1 of 1										
Peak Hour for Entire Intersection Begins at 07:00 AM										
07:00 AM	11	5	16	0	0	0	**4**	**6**	**10**	26
07:15 AM	6	16	22	0	0	0	4	4	8	30
07:30 AM	**12**	12	24	0	0	0	1	4	5	29
07:45 AM	11	**17**	**28**	0	0	0	3	6	9	**37**
Total Volume	40	50	90	0	0	0	12	20	32	122
% App. Total	44.4	55.6		0	0		37.5	62.5		
PHF	.833	.735	.804	.000	.000	.000	.750	.833	.800	.824

Counts Unlimited
PO Box 1178
Corona, CA 92878
(951) 268-6268

City of Irwindale
N/S: I-605 Southbound On Ramp
E/W: Live Oak Avenue
Weather: Clear

File Name : 07_IRW_605S On Lo AM
Site Code : 05117783
Start Date : 11/28/2017
Page No : 2

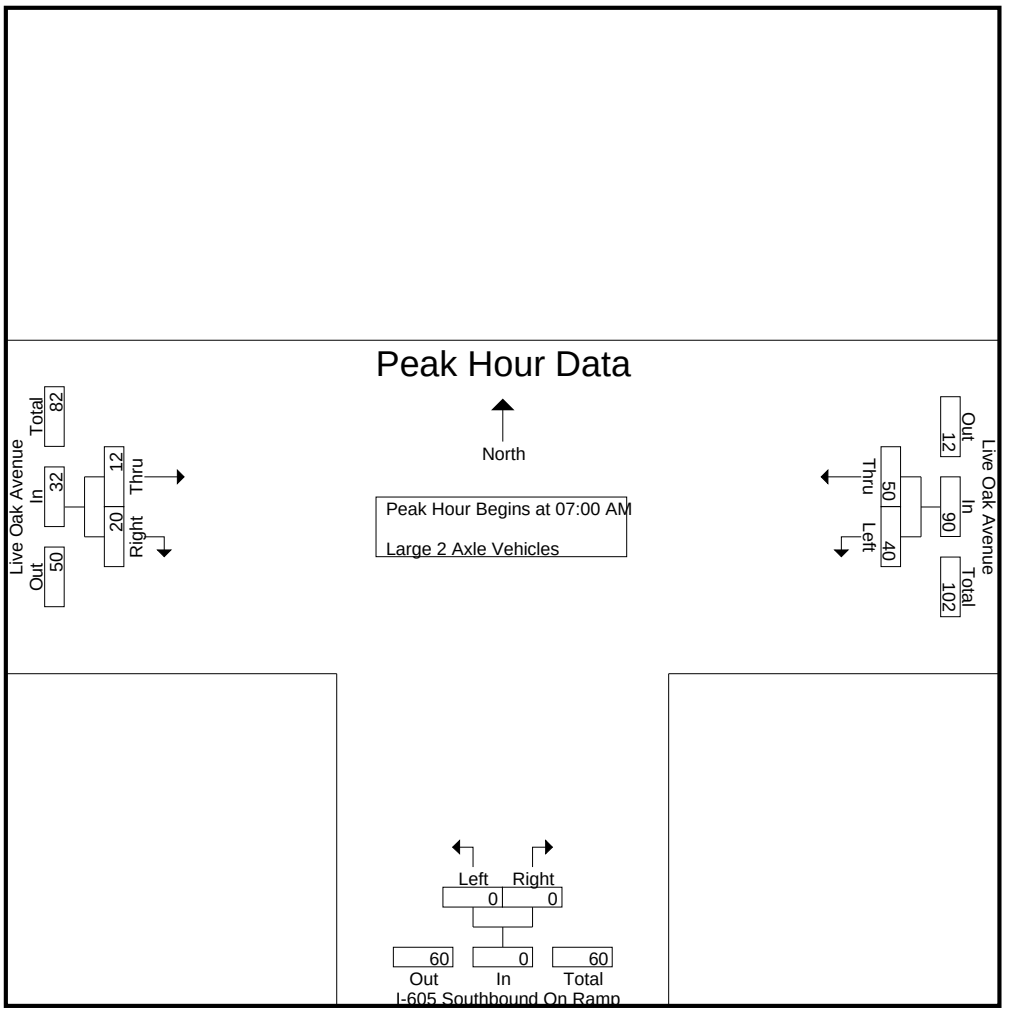

Peak Hour Analysis From 07:00 AM to 07:45 AM - Peak 1 of 1
Peak Hour for Each Approach Begins at:

	07:00 AM			07:00 AM			07:00 AM		
+0 mins.	11	5	16	0	0	0	**4**	**6**	**10**
+15 mins.	6	16	22	0	0	0	4	4	8
+30 mins.	**12**	12	24	0	0	0	1	4	5
+45 mins.	11	**17**	**28**	0	0	0	3	6	9
Total Volume	40	50	90	0	0	0	12	20	32
% App. Total	44.4	55.6		0	0		37.5	62.5	
PHF	.833	.735	.804	.000	.000	.000	.750	.833	.800

Counts Unlimited
PO Box 1178
Corona, CA 92878
(951) 268-6268

City of Irwindale
N/S: I-605 Southbound On Ramp
E/W: Live Oak Avenue
Weather: Clear

File Name : 07_IRW_605S On Lo AM
Site Code : 05117783
Start Date : 11/28/2017
Page No : 1

Groups Printed- 3 Axle Vehicles

	Live Oak Avenue Westbound				I-605 Southbound On Ramp Northbound				Live Oak Avenue Eastbound						
Start Time	Left	Thru	RTOR	App. Total	Left	Right	RTOR	App. Total	Thru	Right	RTOR	App. Total	Exclu. Total	Inclu. Total	Int. Total
07:00 AM	12	11	0	23	0	0	0	0	0	8	0	8	0	31	31
07:15 AM	7	5	0	12	0	0	0	0	0	7	0	7	0	19	19
07:30 AM	2	4	0	6	0	0	0	0	2	9	0	11	0	17	17
07:45 AM	12	4	0	16	0	0	0	0	0	5	0	5	0	21	21
Total	33	24	0	57	0	0	0	0	2	29	0	31	0	88	88
08:00 AM	4	7	0	11	0	0	0	0	1	3	0	4	0	15	15
08:15 AM	7	7	0	14	0	0	0	0	2	2	0	4	0	18	18
08:30 AM	12	4	0	16	0	0	0	0	1	2	0	3	0	19	19
08:45 AM	9	6	0	15	0	0	0	0	0	6	0	6	0	21	21
Total	32	24	0	56	0	0	0	0	4	13	0	17	0	73	73
Grand Total	65	48	0	113	0	0	0	0	6	42	0	48	0	161	161
Apprch %	57.5	42.5			0	0			12.5	87.5					
Total %	40.4	29.8		70.2	0	0		0	3.7	26.1		29.8	0	100	

	Live Oak Avenue Westbound			I-605 Southbound On Ramp Northbound			Live Oak Avenue Eastbound			
Start Time	Left	Thru	App. Total	Left	Right	App. Total	Thru	Right	App. Total	Int. Total
Peak Hour Analysis From 07:00 AM to 07:45 AM - Peak 1 of 1										
Peak Hour for Entire Intersection Begins at 07:00 AM										
07:00 AM	**12**	**11**	**23**	0	0	0	0	8	8	**31**
07:15 AM	7	5	12	0	0	0	0	7	7	19
07:30 AM	2	4	6	0	0	0	**2**	**9**	**11**	17
07:45 AM	12	4	16	0	0	0	0	5	5	21
Total Volume	33	24	57	0	0	0	2	29	31	88
% App. Total	57.9	42.1		0	0		6.5	93.5		
PHF	.688	.545	.620	.000	.000	.000	.250	.806	.705	.710

Counts Unlimited
PO Box 1178
Corona, CA 92878
(951) 268-6268

City of Irwindale
N/S: I-605 Southbound On Ramp
E/W: Live Oak Avenue
Weather: Clear

File Name : 07_IRW_605S On Lo AM
Site Code : 05117783
Start Date : 11/28/2017
Page No : 2

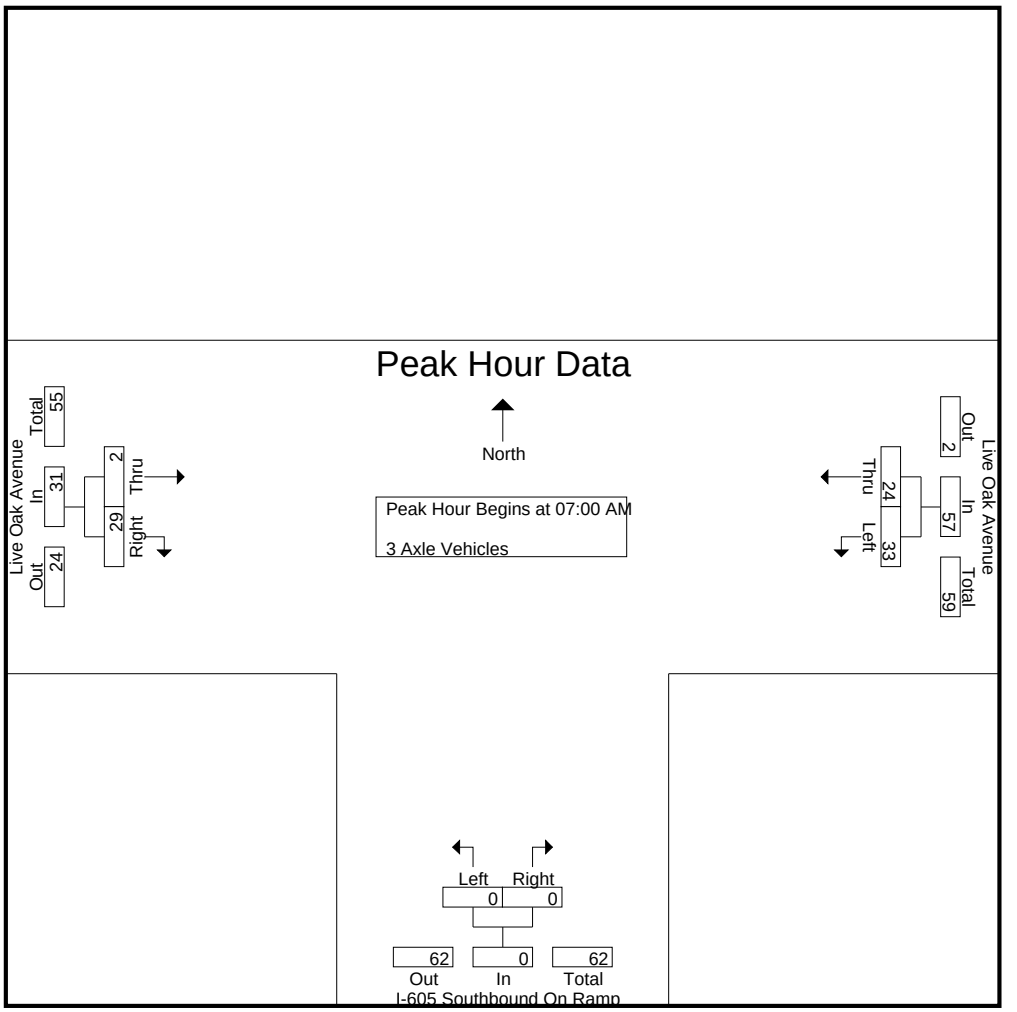

Peak Hour Analysis From 07:00 AM to 07:45 AM - Peak 1 of 1
Peak Hour for Each Approach Begins at:

	07:00 AM			07:00 AM			07:00 AM		
+0 mins.	**12**	**11**	**23**	0	0	0	0	8	8
+15 mins.	7	5	12	0	0	0	0	7	7
+30 mins.	2	4	6	0	0	0	**2**	**9**	**11**
+45 mins.	12	4	16	0	0	0	0	5	5
Total Volume	33	24	57	0	0	0	2	29	31
% App. Total	57.9	42.1		0	0		6.5	93.5	
PHF	.688	.545	.620	.000	.000	.000	.250	.806	.705

Counts Unlimited
PO Box 1178
Corona, CA 92878
(951) 268-6268

City of Irwindale
N/S: I-605 Southbound On Ramp
E/W: Live Oak Avenue
Weather: Clear

File Name : 07_IRW_605S On Lo AM
Site Code : 05117783
Start Date : 11/28/2017
Page No : 1

Groups Printed- 4+ Axle Trucks

	Live Oak Avenue Westbound				I-605 Southbound On Ramp Northbound				Live Oak Avenue Eastbound						
Start Time	Left	Thru	RTOR	App. Total	Left	Right	RTOR	App. Total	Thru	Right	RTOR	App. Total	Exclu. Total	Inclu. Total	Int. Total
07:00 AM	9	5	0	14	0	0	0	0	1	7	0	8	0	22	22
07:15 AM	13	10	0	23	0	0	0	0	2	10	0	12	0	35	35
07:30 AM	13	10	0	23	0	0	0	0	0	8	0	8	0	31	31
07:45 AM	12	4	0	16	0	0	0	0	1	3	0	4	0	20	20
Total	47	29	0	76	0	0	0	0	4	28	0	32	0	108	108
08:00 AM	19	14	0	33	0	0	0	0	2	11	0	13	0	46	46
08:15 AM	10	4	0	14	0	0	0	0	1	8	0	9	0	23	23
08:30 AM	22	15	0	37	0	0	0	0	2	10	0	12	0	49	49
08:45 AM	20	14	0	34	0	0	0	0	2	11	0	13	0	47	47
Total	71	47	0	118	0	0	0	0	7	40	0	47	0	165	165
Grand Total	118	76	0	194	0	0	0	0	11	68	0	79	0	273	273
Apprch %	60.8	39.2			0	0			13.9	86.1					
Total %	43.2	27.8		71.1	0	0		0	4	24.9		28.9	0	100	

	Live Oak Avenue Westbound			I-605 Southbound On Ramp Northbound			Live Oak Avenue Eastbound			
Start Time	Left	Thru	App. Total	Left	Right	App. Total	Thru	Right	App. Total	Int. Total
Peak Hour Analysis From 07:00 AM to 07:45 AM - Peak 1 of 1										
Peak Hour for Entire Intersection Begins at 07:00 AM										
07:00 AM	9	5	14	0	0	0	1	7	8	22
07:15 AM	**13**	**10**	**23**	0	0	0	**2**	**10**	**12**	**35**
07:30 AM	13	10	23	0	0	0	0	8	8	31
07:45 AM	12	4	16	0	0	0	1	3	4	20
Total Volume	47	29	76	0	0	0	4	28	32	108
% App. Total	61.8	38.2		0	0		12.5	87.5		
PHF	.904	.725	.826	.000	.000	.000	.500	.700	.667	.771

Counts Unlimited
PO Box 1178
Corona, CA 92878
(951) 268-6268

City of Irwindale
N/S: I-605 Southbound On Ramp
E/W: Live Oak Avenue
Weather: Clear

File Name : 07_IRW_605S On Lo AM
Site Code : 05117783
Start Date : 11/28/2017
Page No : 2

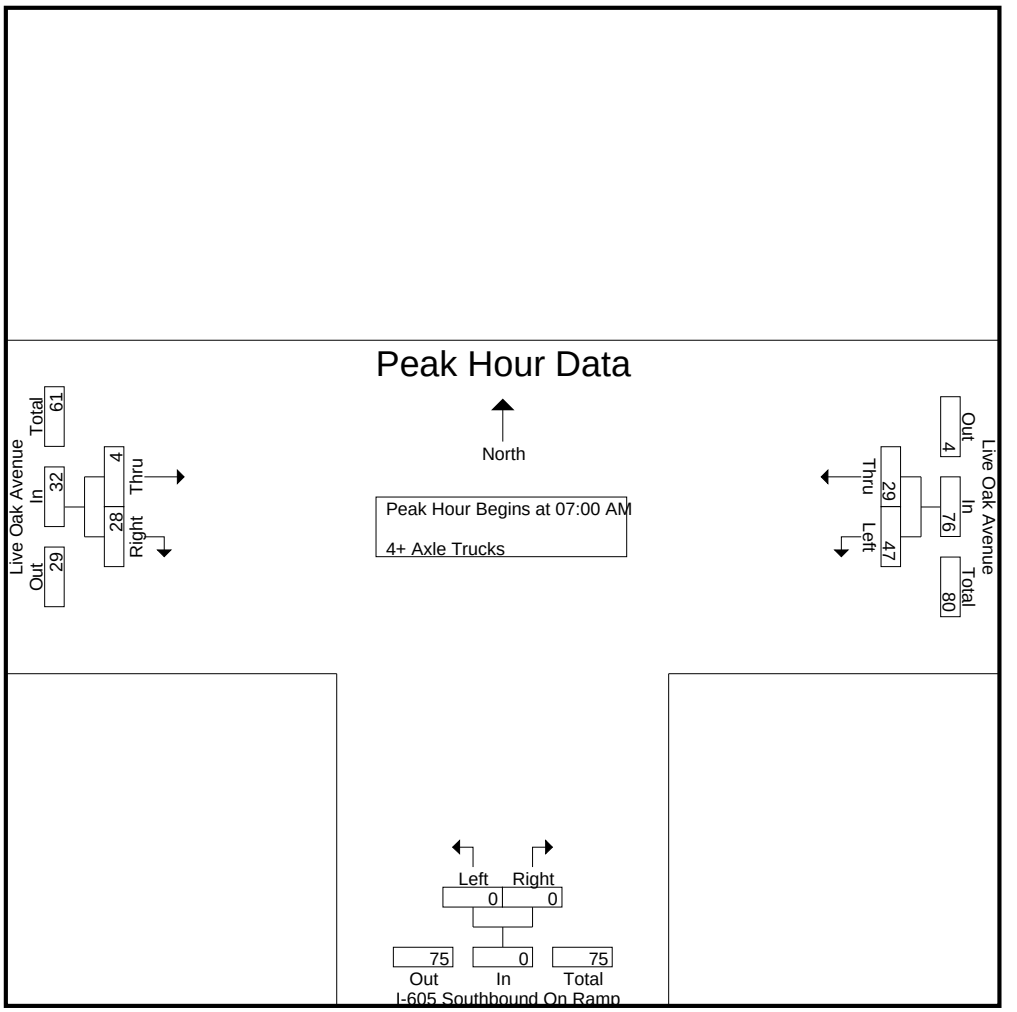

Peak Hour Analysis From 07:00 AM to 07:45 AM - Peak 1 of 1
Peak Hour for Each Approach Begins at:

	07:00 AM			07:00 AM			07:00 AM		
+0 mins.	9	5	14	0	0	0	1	7	8
+15 mins.	**13**	**10**	**23**	0	0	0	**2**	**10**	**12**
+30 mins.	13	10	23	0	0	0	0	8	8
+45 mins.	12	4	16	0	0	0	1	3	4
Total Volume	47	29	76	0	0	0	4	28	32
% App. Total	61.8	38.2		0	0		12.5	87.5	
PHF	.904	.725	.826	.000	.000	.000	.500	.700	.667

Counts Unlimited
PO Box 1178
Corona, CA 92878
(951) 268-6268

City of Irwindale
N/S: I-605 Southbound On Ramp
E/W: Live Oak Avenue
Weather: Clear

File Name : 07_IRW_605S On Lo PM
Site Code : 05117783
Start Date : 11/28/2017
Page No : 1

Groups Printed- Passenger Vehicles - Large 2 Axle Vehicles - 3 Axle Vehicles - 4+ Axle Trucks

	Live Oak Avenue Westbound				I-605 Southbound On Ramp Northbound				Live Oak Avenue Eastbound						
Start Time	Left	Thru	RTOR	App. Total	Left	Right	RTOR	App. Total	Thru	Right	RTOR	App. Total	Exclu. Total	Inclu. Total	Int. Total
04:00 PM	147	212	0	359	0	0	0	0	180	227	0	407	0	766	766
04:15 PM	124	195	0	319	0	0	0	0	205	227	0	432	0	751	751
04:30 PM	126	193	0	319	0	0	0	0	221	276	0	497	0	816	816
04:45 PM	146	200	0	346	0	0	0	0	262	293	0	555	0	901	901
Total	543	800	0	1343	0	0	0	0	868	1023	0	1891	0	3234	3234
05:00 PM	142	232	0	374	0	0	0	0	252	254	0	506	0	880	880
05:15 PM	145	234	0	379	0	0	0	0	263	297	0	560	0	939	939
05:30 PM	124	218	0	342	0	0	0	0	272	270	0	542	0	884	884
05:45 PM	102	229	0	331	0	0	0	0	209	273	0	482	0	813	813
Total	513	913	0	1426	0	0	0	0	996	1094	0	2090	0	3516	3516
Grand Total	1056	1713	0	2769	0	0	0	0	1864	2117	0	3981	0	6750	6750
Apprch %	38.1	61.9			0	0			46.8	53.2					
Total %	15.6	25.4		41	0	0		0	27.6	31.4		59	0	100	
Passenger Vehicles	974	1589		2563	0	0		0	1784	2020		3804	0	0	6367
% Passenger Vehicles	92.2	92.8	0	92.6	0	0	0	0	95.7	95.4	0	95.6	0	0	94.3
Large 2 Axle Vehicles	27	49		76	0	0		0	58	52		110	0	0	186
% Large 2 Axle Vehicles	2.6	2.9	0	2.7	0	0	0	0	3.1	2.5	0	2.8	0	0	2.8
3 Axle Vehicles	18	21		39	0	0		0	17	22		39	0	0	78
% 3 Axle Vehicles	1.7	1.2	0	1.4	0	0	0	0	0.9	1	0	1	0	0	1.2
4+ Axle Trucks	37	54		91	0	0		0	5	23		28	0	0	119
% 4+ Axle Trucks	3.5	3.2	0	3.3	0	0	0	0	0.3	1.1	0	0.7	0	0	1.8

	Live Oak Avenue Westbound			I-605 Southbound On Ramp Northbound			Live Oak Avenue Eastbound			
Start Time	Left	Thru	App. Total	Left	Right	App. Total	Thru	Right	App. Total	Int. Total
Peak Hour Analysis From 04:00 PM to 05:45 PM - Peak 1 of 1										
Peak Hour for Entire Intersection Begins at 04:45 PM										
04:45 PM	**146**	200	346	0	0	0	262	293	555	901
05:00 PM	142	232	374	0	0	0	252	254	506	880
05:15 PM	145	**234**	**379**	0	0	0	263	**297**	**560**	**939**
05:30 PM	124	218	342	0	0	0	**272**	270	542	884
Total Volume	557	884	1441	0	0	0	1049	1114	2163	3604
% App. Total	38.7	61.3		0	0		48.5	51.5		
PHF	.954	.944	.951	.000	.000	.000	.964	.938	.966	.960

Counts Unlimited
PO Box 1178
Corona, CA 92878
(951) 268-6268

City of Irwindale
N/S: I-605 Southbound On Ramp
E/W: Live Oak Avenue
Weather: Clear

File Name : 07_IRW_605S On Lo PM
Site Code : 05117783
Start Date : 11/28/2017
Page No : 2

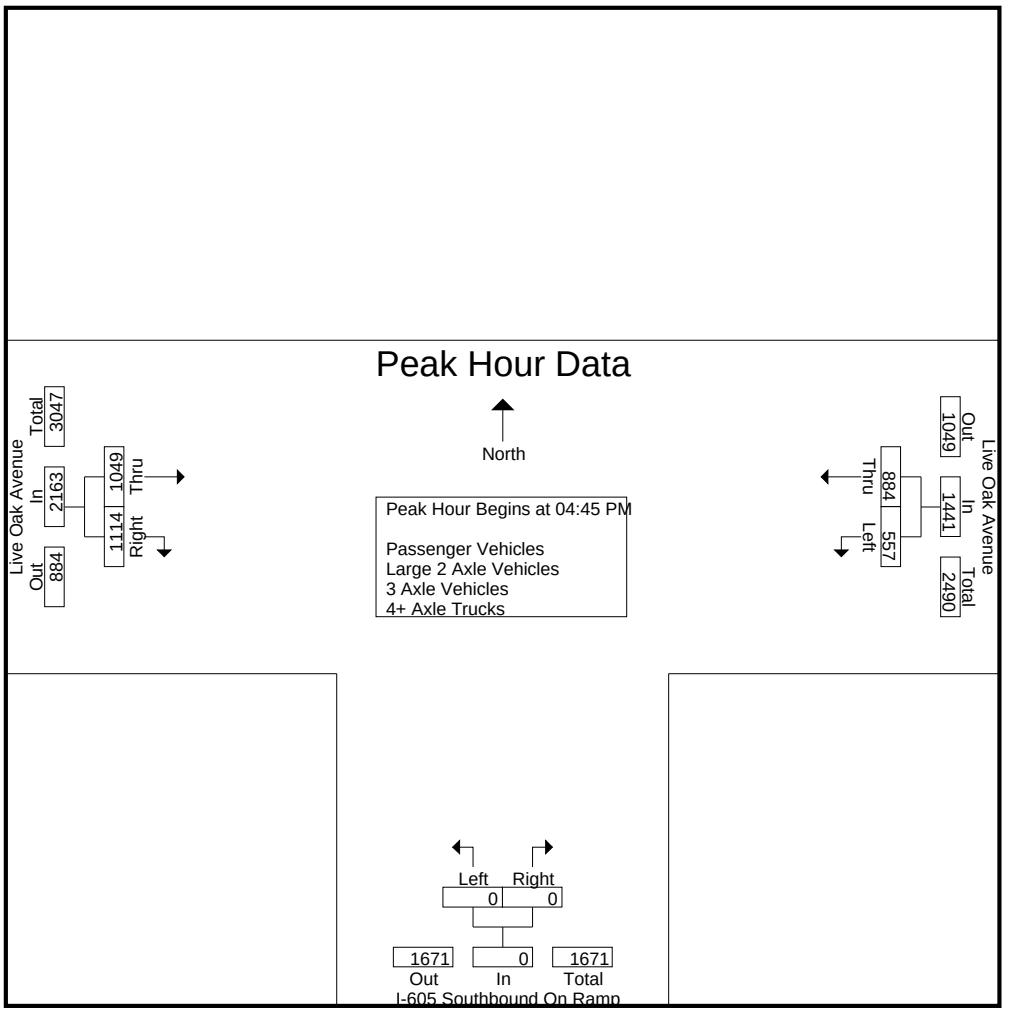

Peak Hour Analysis From 04:00 PM to 05:45 PM - Peak 1 of 1
Peak Hour for Each Approach Begins at:

	04:45 PM			04:00 PM			04:45 PM		
+0 mins.	**146**	200	346	0	0	0	262	293	555
+15 mins.	142	232	374	0	0	0	252	254	506
+30 mins.	145	**234**	**379**	0	0	0	263	**297**	**560**
+45 mins.	124	218	342	0	0	0	**272**	270	542
Total Volume	557	884	1441	0	0	0	1049	1114	2163
% App. Total	38.7	61.3		0	0		48.5	51.5	
PHF	.954	.944	.951	.000	.000	.000	.964	.938	.966

Counts Unlimited
PO Box 1178
Corona, CA 92878
(951) 268-6268

City of Irwindale
N/S: I-605 Southbound On Ramp
E/W: Live Oak Avenue
Weather: Clear

File Name : 07_IRW_605S On Lo PM
Site Code : 05117783
Start Date : 11/28/2017
Page No : 1

Groups Printed- Passenger Vehicles

	Live Oak Avenue Westbound				I-605 Southbound On Ramp Northbound				Live Oak Avenue Eastbound						
Start Time	Left	Thru	RTOR	App. Total	Left	Right	RTOR	App. Total	Thru	Right	RTOR	App. Total	Exclu. Total	Inclu. Total	Int. Total
04:00 PM	130	182	0	312	0	0	0	0	167	215	0	382	0	694	694
04:15 PM	109	170	0	279	0	0	0	0	193	217	0	410	0	689	689
04:30 PM	115	180	0	295	0	0	0	0	208	262	0	470	0	765	765
04:45 PM	134	191	0	325	0	0	0	0	249	271	0	520	0	845	845
Total	488	723	0	1211	0	0	0	0	817	965	0	1782	0	2993	2993
05:00 PM	134	217	0	351	0	0	0	0	247	239	0	486	0	837	837
05:15 PM	138	221	0	359	0	0	0	0	250	283	0	533	0	892	892
05:30 PM	119	209	0	328	0	0	0	0	263	262	0	525	0	853	853
05:45 PM	95	219	0	314	0	0	0	0	207	271	0	478	0	792	792
Total	486	866	0	1352	0	0	0	0	967	1055	0	2022	0	3374	3374
Grand Total	974	1589	0	2563	0	0	0	0	1784	2020	0	3804	0	6367	6367
Apprch %	38	62			0	0			46.9	53.1					
Total %	15.3	25		40.3	0	0		0	28	31.7		59.7	0	100	

	Live Oak Avenue Westbound			I-605 Southbound On Ramp Northbound			Live Oak Avenue Eastbound			
Start Time	Left	Thru	App. Total	Left	Right	App. Total	Thru	Right	App. Total	Int. Total
Peak Hour Analysis From 04:45 PM to 05:30 PM - Peak 1 of 1										
Peak Hour for Entire Intersection Begins at 04:45 PM										
04:45 PM	134	191	325	0	0	0	249	271	520	845
05:00 PM	134	217	351	0	0	0	247	239	486	837
05:15 PM	**138**	**221**	**359**	0	0	0	250	**283**	**533**	**892**
05:30 PM	119	209	328	0	0	0	**263**	262	525	853
Total Volume	525	838	1363	0	0	0	1009	1055	2064	3427
% App. Total	38.5	61.5		0	0		48.9	51.1		
PHF	.951	.948	.949	.000	.000	.000	.959	.932	.968	.960

Counts Unlimited
PO Box 1178
Corona, CA 92878
(951) 268-6268

City of Irwindale
N/S: I-605 Southbound On Ramp
E/W: Live Oak Avenue
Weather: Clear

File Name : 07_IRW_605S On Lo PM
Site Code : 05117783
Start Date : 11/28/2017
Page No : 2

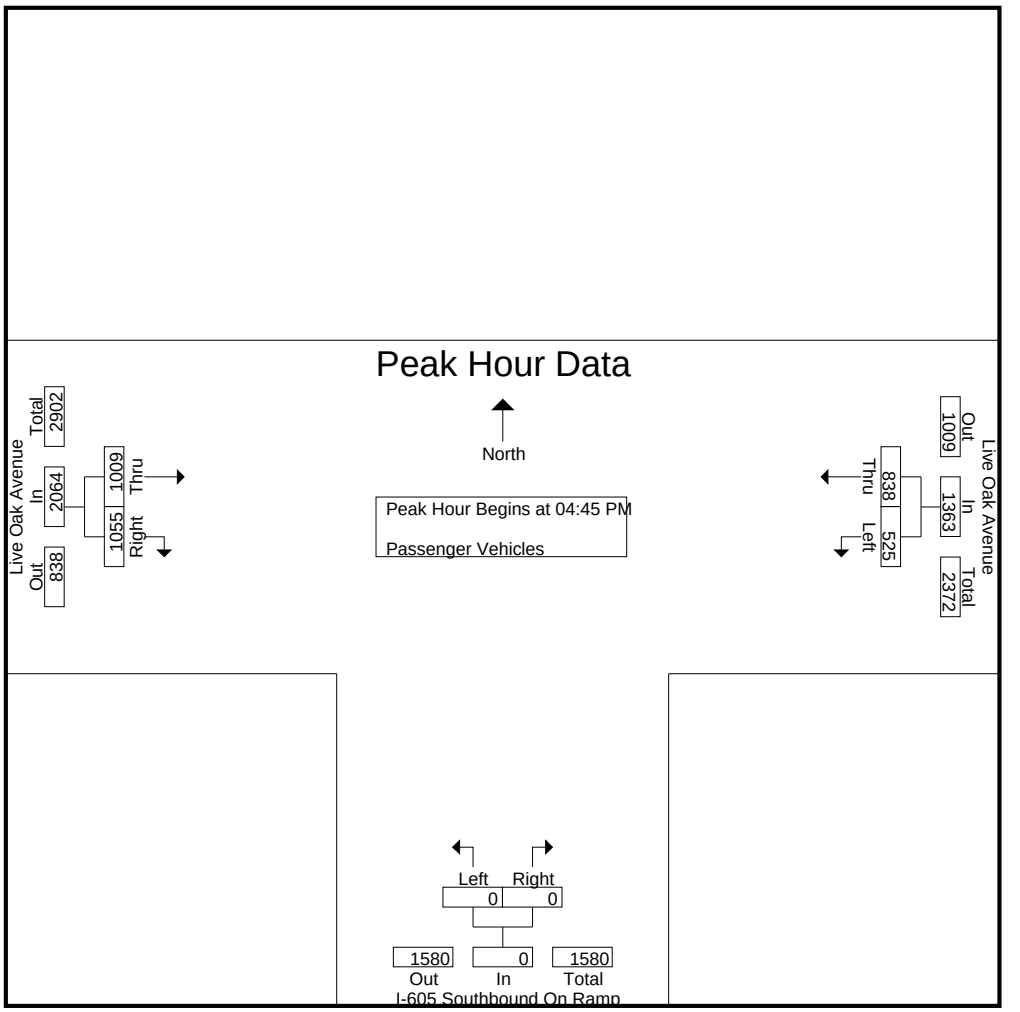

Peak Hour Analysis From 04:45 PM to 05:30 PM - Peak 1 of 1
Peak Hour for Each Approach Begins at:

	04:45 PM			04:45 PM			04:45 PM		
+0 mins.	134	191	325	0	0	0	249	271	520
+15 mins.	134	217	351	0	0	0	247	239	486
+30 mins.	**138**	**221**	**359**	0	0	0	250	**283**	**533**
+45 mins.	119	209	328	0	0	0	**263**	262	525
Total Volume	525	838	1363	0	0	0	1009	1055	2064
% App. Total	38.5	61.5		0	0		48.9	51.1	
PHF	.951	.948	.949	.000	.000	.000	.959	.932	.968

Counts Unlimited
PO Box 1178
Corona, CA 92878
(951) 268-6268

City of Irwindale
N/S: I-605 Southbound On Ramp
E/W: Live Oak Avenue
Weather: Clear

File Name : 07_IRW_605S On Lo PM
Site Code : 05117783
Start Date : 11/28/2017
Page No : 1

Groups Printed- Large 2 Axle Vehicles

	Live Oak Avenue Westbound				I-605 Southbound On Ramp Northbound				Live Oak Avenue Eastbound						
Start Time	Left	Thru	RTOR	App. Total	Left	Right	RTOR	App. Total	Thru	Right	RTOR	App. Total	Exclu. Total	Inclu. Total	Int. Total
04:00 PM	5	14	0	19	0	0	0	0	9	8	0	17	0	36	36
04:15 PM	4	8	0	12	0	0	0	0	7	9	0	16	0	28	28
04:30 PM	5	4	0	9	0	0	0	0	9	12	0	21	0	30	30
04:45 PM	1	2	0	3	0	0	0	0	9	6	0	15	0	18	18
Total	15	28	0	43	0	0	0	0	34	35	0	69	0	112	112
05:00 PM	3	5	0	8	0	0	0	0	5	5	0	10	0	18	18
05:15 PM	4	8	0	12	0	0	0	0	9	5	0	14	0	26	26
05:30 PM	2	3	0	5	0	0	0	0	9	5	0	14	0	19	19
05:45 PM	3	5	0	8	0	0	0	0	1	2	0	3	0	11	11
Total	12	21	0	33	0	0	0	0	24	17	0	41	0	74	74
Grand Total	27	49	0	76	0	0	0	0	58	52	0	110	0	186	186
Apprch %	35.5	64.5			0	0			52.7	47.3					
Total %	14.5	26.3		40.9	0	0		0	31.2	28		59.1	0	100	

	Live Oak Avenue Westbound			I-605 Southbound On Ramp Northbound			Live Oak Avenue Eastbound			
Start Time	Left	Thru	App. Total	Left	Right	App. Total	Thru	Right	App. Total	Int. Total
Peak Hour Analysis From 04:45 PM to 05:30 PM - Peak 1 of 1										
Peak Hour for Entire Intersection Begins at 04:45 PM										
04:45 PM	1	2	3	0	0	0	**9**	**6**	**15**	18
05:00 PM	3	5	8	0	0	0	5	5	10	18
05:15 PM	**4**	**8**	**12**	0	0	0	9	5	14	**26**
05:30 PM	2	3	5	0	0	0	9	5	14	19
Total Volume	10	18	28	0	0	0	32	21	53	81
% App. Total	35.7	64.3		0	0		60.4	39.6		
PHF	.625	.563	.583	.000	.000	.000	.889	.875	.883	.779

Counts Unlimited
PO Box 1178
Corona, CA 92878
(951) 268-6268

City of Irwindale
N/S: I-605 Southbound On Ramp
E/W: Live Oak Avenue
Weather: Clear

File Name : 07_IRW_605S On Lo PM
Site Code : 05117783
Start Date : 11/28/2017
Page No : 2

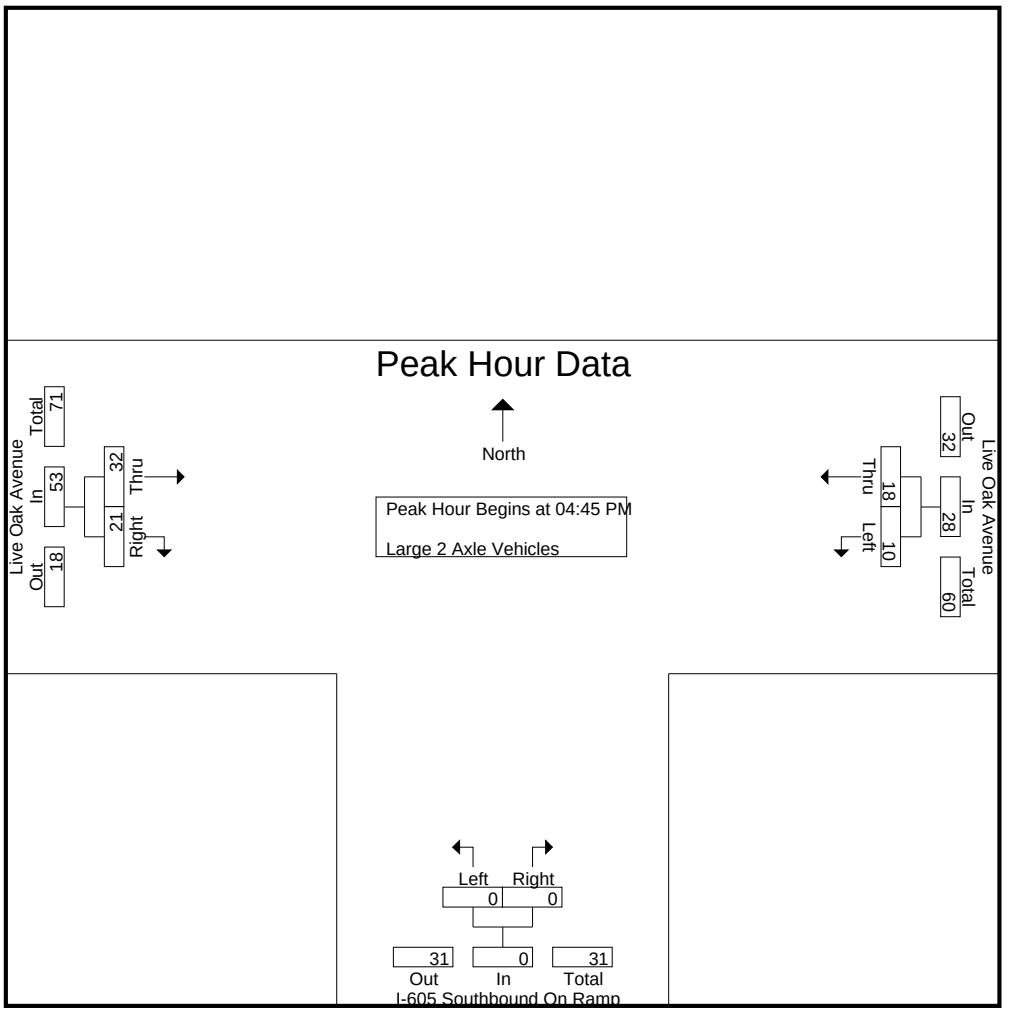

Peak Hour Analysis From 04:45 PM to 05:30 PM - Peak 1 of 1
Peak Hour for Each Approach Begins at:

	04:45 PM			04:45 PM			04:45 PM		
+0 mins.	1	2	3	0	0	0	**9**	**6**	**15**
+15 mins.	3	5	8	0	0	0	5	5	10
+30 mins.	**4**	**8**	**12**	0	0	0	9	5	14
+45 mins.	2	3	5	0	0	0	9	5	14
Total Volume	10	18	28	0	0	0	32	21	53
% App. Total	35.7	64.3		0	0		60.4	39.6	
PHF	.625	.563	.583	.000	.000	.000	.889	.875	.883

Counts Unlimited
PO Box 1178
Corona, CA 92878
(951) 268-6268

City of Irwindale
N/S: I-605 Southbound On Ramp
E/W: Live Oak Avenue
Weather: Clear

File Name : 07_IRW_605S On Lo PM
Site Code : 05117783
Start Date : 11/28/2017
Page No : 1

Groups Printed- 3 Axle Vehicles

	Live Oak Avenue Westbound				I-605 Southbound On Ramp Northbound				Live Oak Avenue Eastbound						
Start Time	Left	Thru	RTOR	App. Total	Left	Right	RTOR	App. Total	Thru	Right	RTOR	App. Total	Exclu. Total	Inclu. Total	Int. Total
04:00 PM	3	5	0	8	0	0	0	0	3	0	0	3	0	11	11
04:15 PM	6	5	0	11	0	0	0	0	3	0	0	3	0	14	14
04:30 PM	1	0	0	1	0	0	0	0	2	1	0	3	0	4	4
04:45 PM	1	3	0	4	0	0	0	0	4	10	0	14	0	18	18
Total	11	13	0	24	0	0	0	0	12	11	0	23	0	47	47
05:00 PM	1	5	0	6	0	0	0	0	0	4	0	4	0	10	10
05:15 PM	3	1	0	4	0	0	0	0	4	5	0	9	0	13	13
05:30 PM	0	1	0	1	0	0	0	0	0	2	0	2	0	3	3
05:45 PM	3	1	0	4	0	0	0	0	1	0	0	1	0	5	5
Total	7	8	0	15	0	0	0	0	5	11	0	16	0	31	31
Grand Total	18	21	0	39	0	0	0	0	17	22	0	39	0	78	78
Apprch %	46.2	53.8			0	0			43.6	56.4					
Total %	23.1	26.9		50	0	0		0	21.8	28.2		50	0	100	

	Live Oak Avenue Westbound			I-605 Southbound On Ramp Northbound			Live Oak Avenue Eastbound			
Start Time	Left	Thru	App. Total	Left	Right	App. Total	Thru	Right	App. Total	Int. Total
Peak Hour Analysis From 04:45 PM to 05:30 PM - Peak 1 of 1										
Peak Hour for Entire Intersection Begins at 04:45 PM										
04:45 PM	1	3	4	0	0	0	**4**	**10**	**14**	**18**
05:00 PM	1	**5**	**6**	0	0	0	0	4	4	10
05:15 PM	**3**	1	4	0	0	0	4	5	9	13
05:30 PM	0	1	1	0	0	0	0	2	2	3
Total Volume	5	10	15	0	0	0	8	21	29	44
% App. Total	33.3	66.7		0	0		27.6	72.4		
PHF	.417	.500	.625	.000	.000	.000	.500	.525	.518	.611

Counts Unlimited
PO Box 1178
Corona, CA 92878
(951) 268-6268

City of Irwindale
N/S: I-605 Southbound On Ramp
E/W: Live Oak Avenue
Weather: Clear

File Name : 07_IRW_605S On Lo PM
Site Code : 05117783
Start Date : 11/28/2017
Page No : 2

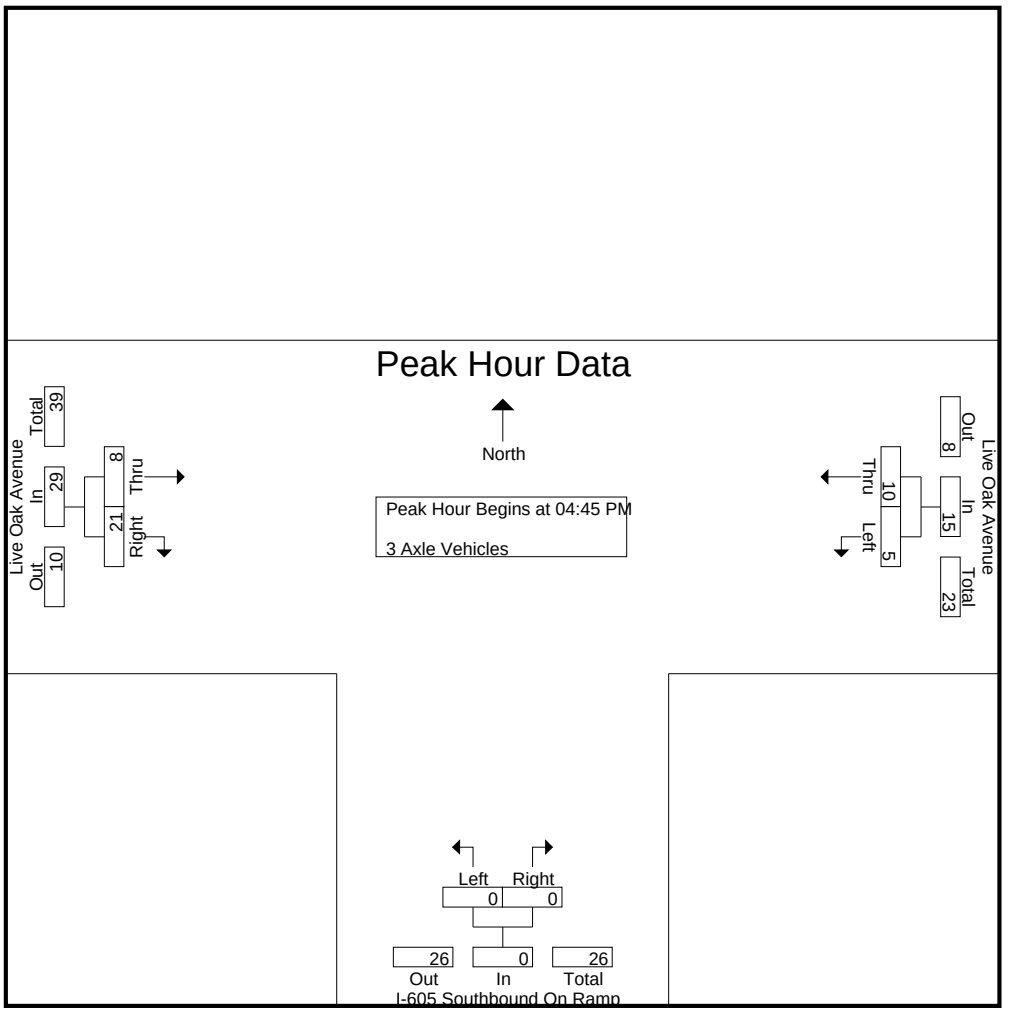

Peak Hour Analysis From 04:45 PM to 05:30 PM - Peak 1 of 1
Peak Hour for Each Approach Begins at:

	04:45 PM			04:45 PM			04:45 PM		
+0 mins.	1	3	4	0	0	0	**4**	**10**	**14**
+15 mins.	1	**5**	**6**	0	0	0	0	4	4
+30 mins.	**3**	1	4	0	0	0	4	5	9
+45 mins.	0	1	1	0	0	0	0	2	2
Total Volume	5	10	15	0	0	0	8	21	29
% App. Total	33.3	66.7		0	0		27.6	72.4	
PHF	.417	.500	.625	.000	.000	.000	.500	.525	.518

Counts Unlimited
PO Box 1178
Corona, CA 92878
(951) 268-6268

City of Irwindale
N/S: I-605 Southbound On Ramp
E/W: Live Oak Avenue
Weather: Clear

File Name : 07_IRW_605S On Lo PM
Site Code : 05117783
Start Date : 11/28/2017
Page No : 1

Groups Printed- 4+ Axle Trucks

	Live Oak Avenue Westbound				I-605 Southbound On Ramp Northbound				Live Oak Avenue Eastbound						
Start Time	Left	Thru	RTOR	App. Total	Left	Right	RTOR	App. Total	Thru	Right	RTOR	App. Total	Exclu. Total	Inclu. Total	Int. Total
04:00 PM	9	11	0	20	0	0	0	0	1	4	0	5	0	25	25
04:15 PM	5	12	0	17	0	0	0	0	2	1	0	3	0	20	20
04:30 PM	5	9	0	14	0	0	0	0	2	1	0	3	0	17	17
04:45 PM	10	4	0	14	0	0	0	0	0	6	0	6	0	20	20
Total	29	36	0	65	0	0	0	0	5	12	0	17	0	82	82
05:00 PM	4	5	0	9	0	0	0	0	0	6	0	6	0	15	15
05:15 PM	0	4	0	4	0	0	0	0	0	4	0	4	0	8	8
05:30 PM	3	5	0	8	0	0	0	0	0	1	0	1	0	9	9
05:45 PM	1	4	0	5	0	0	0	0	0	0	0	0	0	5	5
Total	8	18	0	26	0	0	0	0	0	11	0	11	0	37	37
Grand Total	37	54	0	91	0	0	0	0	5	23	0	28	0	119	119
Apprch %	40.7	59.3			0	0			17.9	82.1					
Total %	31.1	45.4		76.5	0	0		0	4.2	19.3		23.5	0	100	

	Live Oak Avenue Westbound			I-605 Southbound On Ramp Northbound			Live Oak Avenue Eastbound			
Start Time	Left	Thru	App. Total	Left	Right	App. Total	Thru	Right	App. Total	Int. Total
Peak Hour Analysis From 04:45 PM to 05:30 PM - Peak 1 of 1										
Peak Hour for Entire Intersection Begins at 04:45 PM										
04:45 PM	**10**	4	**14**	0	0	0	0	**6**	**6**	**20**
05:00 PM	4	**5**	9	0	0	0	0	6	6	15
05:15 PM	0	4	4	0	0	0	0	4	4	8
05:30 PM	3	5	8	0	0	0	0	1	1	9
Total Volume	17	18	35	0	0	0	0	17	17	52
% App. Total	48.6	51.4		0	0		0	100		
PHF	.425	.900	.625	.000	.000	.000	.000	.708	.708	.650

Counts Unlimited
PO Box 1178
Corona, CA 92878
(951) 268-6268

City of Irwindale
N/S: I-605 Southbound On Ramp
E/W: Live Oak Avenue
Weather: Clear

File Name : 07_IRW_605S On Lo PM
Site Code : 05117783
Start Date : 11/28/2017
Page No : 2

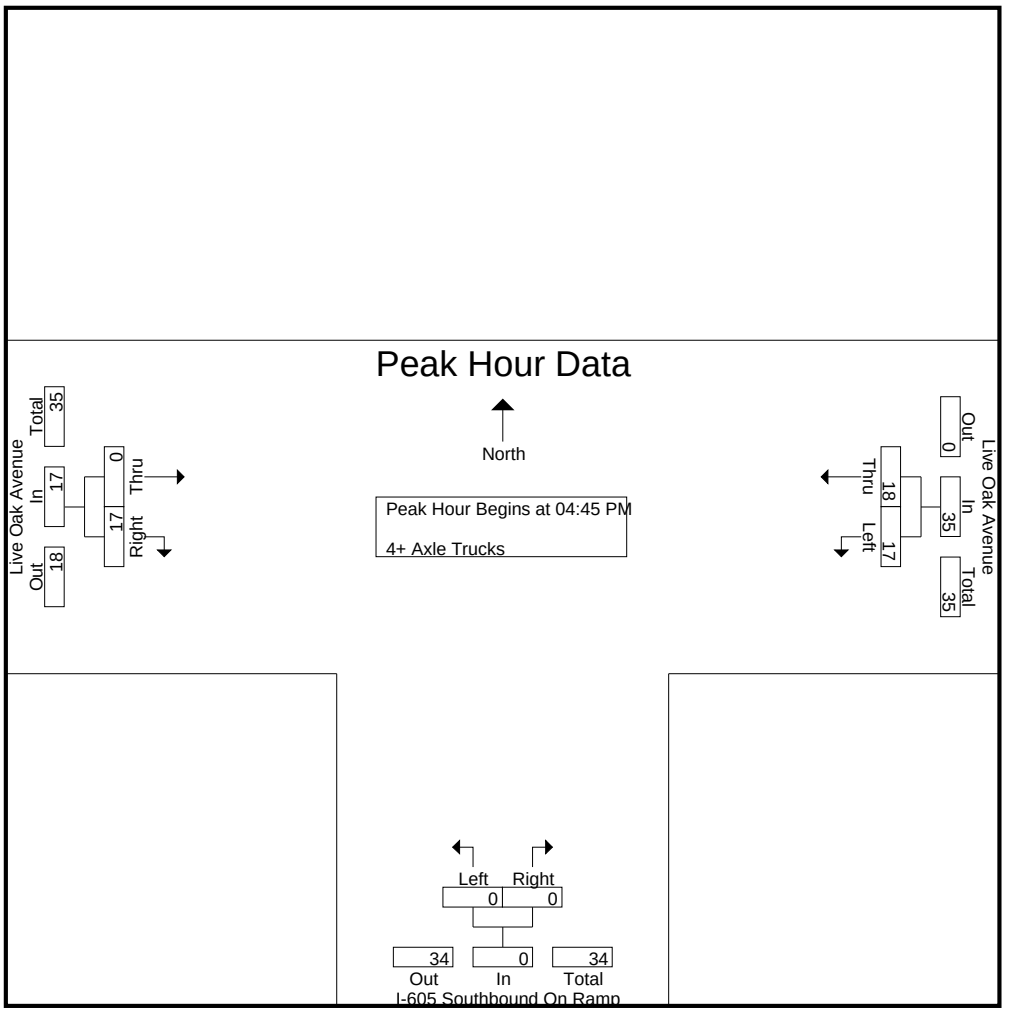

Peak Hour Analysis From 04:45 PM to 05:30 PM - Peak 1 of 1
Peak Hour for Each Approach Begins at:

	04:45 PM			04:45 PM			04:45 PM		
+0 mins.	**10**	4	**14**	0	0	0	0	**6**	**6**
+15 mins.	4	**5**	9	0	0	0	0	6	6
+30 mins.	0	4	4	0	0	0	0	4	4
+45 mins.	3	5	8	0	0	0	0	1	1
Total Volume	17	18	35	0	0	0	0	17	17
% App. Total	48.6	51.4		0	0		0	100	
PHF	.425	.900	.625	.000	.000	.000	.000	.708	.708

Location: Irwindale
N/S: I-605 Southbound On Ramp
E/W: Live Oak Avenue

Date: 11/28/2017
Day: Tuesday

PEDESTRIANS

	North Leg Dead End	East Leg Live Oak Avenue	South Leg I-605 SB On Ramp	West Leg Live Oak Avenue	TOTAL
7:00 AM	0	0	0	0	0
7:15 AM	0	0	0	0	0
7:30 AM	0	0	0	0	0
7:45 AM	0	0	0	0	0
8:00 AM	0	0	0	0	0
8:15 AM	0	0	0	0	0
8:30 AM	0	0	0	0	0
8:45 AM	0	0	0	0	0
TOTAL VOLUMES:	0	0	0	0	0

	North Leg Dead End	East Leg Live Oak Avenue	South Leg I-605 SB On Ramp	West Leg Live Oak Avenue	TOTAL
4:00 PM	0	0	0	0	0
4:15 PM	0	0	0	0	0
4:30 PM	0	0	0	0	0
4:45 PM	0	0	0	0	0
5:00 PM	0	0	0	0	0
5:15 PM	0	0	0	0	0
5:30 PM	0	0	0	0	0
5:45 PM	0	0	0	0	0
TOTAL VOLUMES:	0	0	0	0	0

Counts Unlimited
P.O. Box 1178
Corona, CA 92878
(951) 268-6268

Location: Irwindale
N/S: I-605 Southbound On Ramp
E/W: Live Oak Avenue

Date: 11/28/2017
Day: Tuesday

BICYCLES

	North Leg Dead End	East Leg Live Oak Avenue	South Leg I-605 SB On Ramp	West Leg Live Oak Avenue	TOTAL
7:00 AM	0	0	0	0	0
7:15 AM	1	0	0	0	1
7:30 AM	0	0	1	0	1
7:45 AM	0	0	1	0	1
8:00 AM	0	0	3	0	3
8:15 AM	0	0	0	0	0
8:30 AM	0	0	0	0	0
8:45 AM	0	0	0	0	0
TOTAL VOLUMES:	1	0	5	0	6

	North Leg Dead End	East Leg Live Oak Avenue	South Leg I-605 SB On Ramp	West Leg Live Oak Avenue	TOTAL
4:00 PM	1	0	0	0	1
4:15 PM	0	0	0	0	0
4:30 PM	0	0	1	0	1
4:45 PM	0	0	0	0	0
5:00 PM	0	0	0	0	0
5:15 PM	0	0	0	0	0
5:30 PM	0	0	0	0	0
5:45 PM	0	0	0	0	0
TOTAL VOLUMES:	1	0	1	0	2

Counts Unlimited
P.O. Box 1178
Corona, CA 92878
(951) 268-6268

Counts Unlimited
PO Box 1178
Corona, CA 92878
(951) 268-6268

City of Irwindale
N/S: I-605 Northbound Off Ramps
E/W: Live Oak Avenue
Weather: Clear

File Name : 08_IRW_605N Lo AM
Site Code : 05117783
Start Date : 11/28/2017
Page No : 1

Groups Printed- Passenger Vehicles - Large 2 Axle Vehicles - 3 Axle Vehicles - 4+ Axle Trucks

	I-605 Northbound Off Ramp Southbound					Live Oak Avenue Westbound					I-605 Northbound Off Ramp Northbound					Live Oak Avenue Eastbound							
Start Time	Left	Thru	Right	RTOR	App. Total	Left	Thru	Right	RTOR	App. Total	Left	Thru	Right	RTOR	App. Total	Left	Thru	Right	RTOR	App. Total	Exclu. Total	Inclu. Total	Int. Total
07:00 AM	0	0	104	0	104	0	344	0	0	344	0	0	107	0	107	0	53	0	0	53	0	608	608
07:15 AM	0	0	91	0	91	0	307	0	0	307	0	0	107	0	107	0	59	0	0	59	0	564	564
07:30 AM	0	0	119	0	119	0	255	0	0	255	0	0	116	0	116	0	63	0	0	63	0	553	553
07:45 AM	0	0	118	0	118	0	299	0	0	299	0	0	139	0	139	0	87	0	0	87	0	643	643
Total	0	0	432	0	432	0	1205	0	0	1205	0	0	469	0	469	0	262	0	0	262	0	2368	2368
08:00 AM	0	0	128	0	128	0	255	0	0	255	0	0	116	0	116	0	88	0	0	88	0	587	587
08:15 AM	0	0	135	0	135	0	223	0	0	223	0	0	128	0	128	0	90	0	0	90	0	576	576
08:30 AM	0	0	117	0	117	0	216	0	0	216	0	0	90	0	90	0	88	0	0	88	0	511	511
08:45 AM	0	0	121	0	121	0	225	0	0	225	0	0	130	0	130	0	87	0	0	87	0	563	563
Total	0	0	501	0	501	0	919	0	0	919	0	0	464	0	464	0	353	0	0	353	0	2237	2237
Grand Total	0	0	933	0	933	0	2124	0	0	2124	0	0	933	0	933	0	615	0	0	615	0	4605	4605
Apprch %	0	0	100			0	100	0			0	0	100			0	100	0					
Total %	0	0	20.3		20.3	0	46.1	0		46.1	0	0	20.3		20.3	0	13.4	0		13.4	0	100	
Passenger Vehicles	0	0	828		828	0	1783	0		1783	0	0	741		741	0	572	0		572	0	0	3924
% Passenger Vehicles	0	0	88.7	0	88.7	0	83.9	0	0	83.9	0	0	79.4	0	79.4	0	93	0	0	93	0	0	85.2
Large 2 Axle Vehicles	0	0	22		22	0	119	0		119	0	0	45		45	0	25	0		25	0	0	211
% Large 2 Axle Vehicles	0	0	2.4	0	2.4	0	5.6	0	0	5.6	0	0	4.8	0	4.8	0	4.1	0	0	4.1	0	0	4.6
3 Axle Vehicles	0	0	21		21	0	91	0		91	0	0	42		42	0	7	0		7	0	0	161
% 3 Axle Vehicles	0	0	2.3	0	2.3	0	4.3	0	0	4.3	0	0	4.5	0	4.5	0	1.1	0	0	1.1	0	0	3.5
4+ Axle Trucks	0	0	62		62	0	131	0		131	0	0	105		105	0	11	0		11	0	0	309
% 4+ Axle Trucks	0	0	6.6	0	6.6	0	6.2	0	0	6.2	0	0	11.3	0	11.3	0	1.8	0	0	1.8	0	0	6.7

	I-605 Northbound Off Ramp Southbound				Live Oak Avenue Westbound				I-605 Northbound Off Ramp Northbound				Live Oak Avenue Eastbound				
Start Time	Left	Thru	Right	App. Total	Left	Thru	Right	App. Total	Left	Thru	Right	App. Total	Left	Thru	Right	App. Total	Int. Total
Peak Hour Analysis From 07:00 AM to 08:45 AM - Peak 1 of 1																	
Peak Hour for Entire Intersection Begins at 07:00 AM																	
07:00 AM	0	0	104	104	0	**344**	0	**344**	0	0	107	107	0	53	0	53	608
07:15 AM	0	0	91	91	0	307	0	307	0	0	107	107	0	59	0	59	564
07:30 AM	0	0	**119**	**119**	0	255	0	255	0	0	116	116	0	63	0	63	553
07:45 AM	0	0	118	118	0	299	0	299	0	0	**139**	**139**	0	**87**	0	**87**	**643**
Total Volume	0	0	432	432	0	1205	0	1205	0	0	469	469	0	262	0	262	2368
% App. Total	0	0	100		0	100	0		0	0	100		0	100	0		
PHF	.000	.000	.908	.908	.000	.876	.000	.876	.000	.000	.844	.844	.000	.753	.000	.753	.921

Counts Unlimited
PO Box 1178
Corona, CA 92878
(951) 268-6268

City of Irwindale
N/S: I-605 Northbound Off Ramps
E/W: Live Oak Avenue
Weather: Clear

File Name : 08_IRW_605N Lo AM
Site Code : 05117783
Start Date : 11/28/2017
Page No : 2

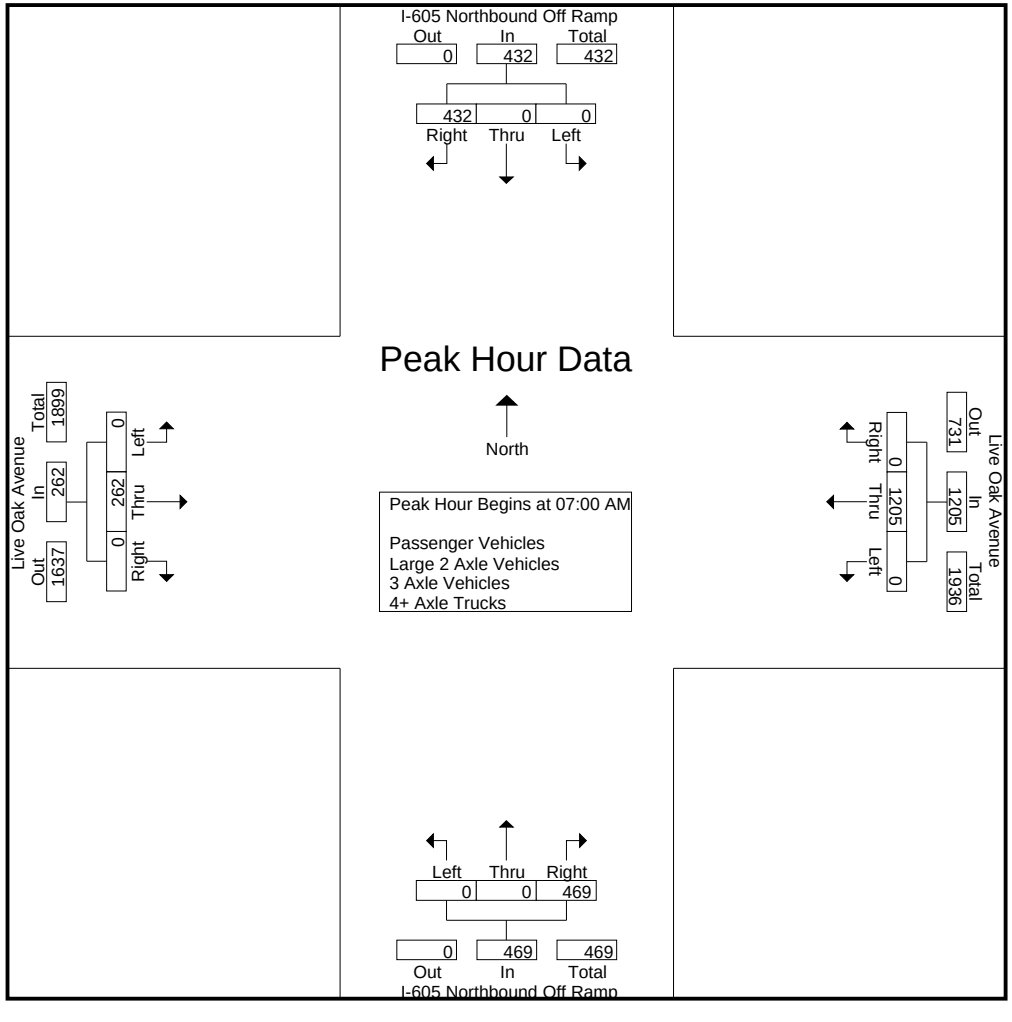

Counts Unlimited
PO Box 1178
Corona, CA 92878
(951) 268-6268

City of Irwindale
N/S: I-605 Northbound Off Ramps
E/W: Live Oak Avenue
Weather: Clear

File Name : 08_IRW_605N Lo AM
Site Code : 05117783
Start Date : 11/28/2017

	I-605 Northbound Off Ramp Southbound				Live Oak Avenue Westbound				I-605 Northbound Off Ramp Northbound				Live Oak Avenue Eastbound				
Start Time	Left	Thru	Right	App. Total	Left	Thru	Right	App. Total	Left	Thru	Right	App. Total	Left	Thru	Right	App. Total	Int. Total
Peak Hour Analysis From 07:00 AM to 08:45 AM - Peak 1 of 1																	
Peak Hour for Each Approach Begins at:																	
	08:00 AM				07:00 AM				07:30 AM				07:45 AM				
+0 mins.	0	0	128	128	0	**344**	0	**344**	0	0	116	116	0	87	0	87	
+15 mins.	0	0	**135**	**135**	0	307	0	307	0	0	**139**	**139**	0	88	0	88	
+30 mins.	0	0	117	117	0	255	0	255	0	0	116	116	0	**90**	0	**90**	
+45 mins.	0	0	121	121	0	299	0	299	0	0	128	128	0	88	0	88	
Total Volume	0	0	501	501	0	1205	0	1205	0	0	499	499	0	353	0	353	
% App. Total	0	0	100		0	100	0		0	0	100		0	100	0		
PHF	.000	.000	.928	.928	.000	.876	.000	.876	.000	.000	.897	.897	.000	.981	.000	.981	

Counts Unlimited
PO Box 1178
Corona, CA 92878
(951) 268-6268

City of Irwindale
N/S: I-605 Northbound Off Ramps
E/W: Live Oak Avenue
Weather: Clear

File Name : 08_IRW_605N Lo AM
Site Code : 05117783
Start Date : 11/28/2017
Page No : 1

Groups Printed- Passenger Vehicles

	I-605 Northbound Off Ramp Southbound					Live Oak Avenue Westbound					I-605 Northbound Off Ramp Northbound					Live Oak Avenue Eastbound							
Start Time	Left	Thru	Right	RTOR	App. Total	Left	Thru	Right	RTOR	App. Total	Left	Thru	Right	RTOR	App. Total	Left	Thru	Right	RTOR	App. Total	Exclu. Total	Inclu. Total	Int. Total
07:00 AM	0	0	94	0	94	0	304	0	0	304	0	0	90	0	90	0	48	0	0	48	0	536	536
07:15 AM	0	0	77	0	77	0	266	0	0	266	0	0	90	0	90	0	52	0	0	52	0	485	485
07:30 AM	0	0	107	0	107	0	218	0	0	218	0	0	97	0	97	0	60	0	0	60	0	482	482
07:45 AM	0	0	111	0	111	0	247	0	0	247	0	0	118	0	118	0	83	0	0	83	0	559	559
Total	0	0	389	0	389	0	1035	0	0	1035	0	0	395	0	395	0	243	0	0	243	0	2062	2062
08:00 AM	0	0	109	0	109	0	221	0	0	221	0	0	90	0	90	0	82	0	0	82	0	502	502
08:15 AM	0	0	126	0	126	0	189	0	0	189	0	0	93	0	93	0	81	0	0	81	0	489	489
08:30 AM	0	0	101	0	101	0	163	0	0	163	0	0	59	0	59	0	85	0	0	85	0	408	408
08:45 AM	0	0	103	0	103	0	175	0	0	175	0	0	104	0	104	0	81	0	0	81	0	463	463
Total	0	0	439	0	439	0	748	0	0	748	0	0	346	0	346	0	329	0	0	329	0	1862	1862
Grand Total	0	0	828	0	828	0	1783	0	0	1783	0	0	741	0	741	0	572	0	0	572	0	3924	3924
Apprch %	0	0	100			0	100	0			0	0	100			0	100	0					
Total %	0	0	21.1		21.1	0	45.4	0		45.4	0	0	18.9		18.9	0	14.6	0		14.6	0	100	

	I-605 Northbound Off Ramp Southbound				Live Oak Avenue Westbound				I-605 Northbound Off Ramp Northbound				Live Oak Avenue Eastbound				
Start Time	Left	Thru	Right	App. Total	Left	Thru	Right	App. Total	Left	Thru	Right	App. Total	Left	Thru	Right	App. Total	Int. Total
Peak Hour Analysis From 07:00 AM to 07:45 AM - Peak 1 of 1																	
Peak Hour for Entire Intersection Begins at 07:00 AM																	
07:00 AM	0	0	94	94	0	**304**	0	**304**	0	0	90	90	0	48	0	48	536
07:15 AM	0	0	77	77	0	266	0	266	0	0	90	90	0	52	0	52	485
07:30 AM	0	0	107	107	0	218	0	218	0	0	97	97	0	60	0	60	482
07:45 AM	0	0	**111**	**111**	0	247	0	247	0	0	**118**	**118**	0	**83**	0	**83**	**559**
Total Volume	0	0	389	389	0	1035	0	1035	0	0	395	395	0	243	0	243	2062
% App. Total	0	0	100		0	100	0		0	0	100		0	100	0		
PHF	.000	.000	.876	.876	.000	.851	.000	.851	.000	.000	.837	.837	.000	.732	.000	.732	.922

Counts Unlimited
PO Box 1178
Corona, CA 92878
(951) 268-6268

City of Irwindale
N/S: I-605 Northbound Off Ramps
E/W: Live Oak Avenue
Weather: Clear

File Name : 08_IRW_605N Lo AM
Site Code : 05117783
Start Date : 11/28/2017
Page No : 2

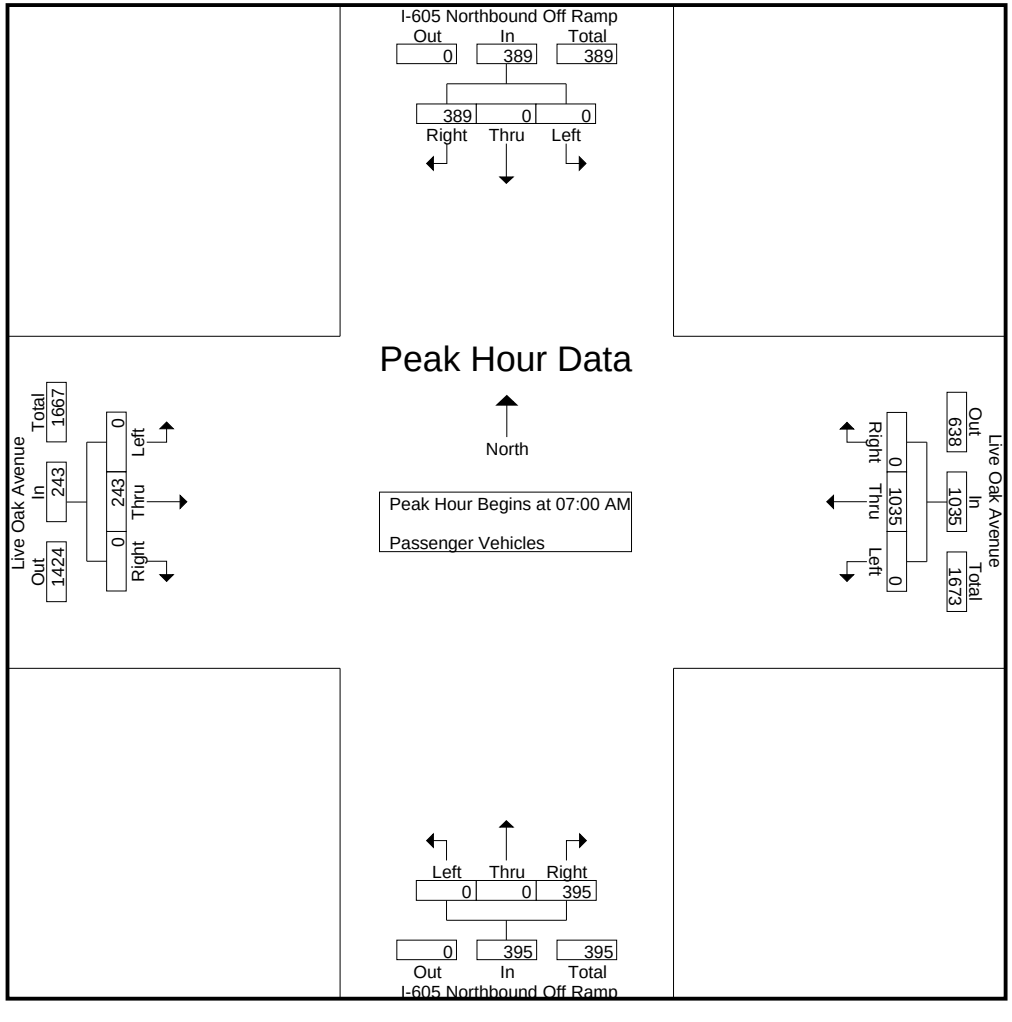

Counts Unlimited
PO Box 1178
Corona, CA 92878
(951) 268-6268

City of Irwindale
N/S: I-605 Northbound Off Ramps
E/W: Live Oak Avenue
Weather: Clear

File Name : 08_IRW_605N Lo AM
Site Code : 05117783
Start Date : 11/28/2017

	I-605 Northbound Off Ramp Southbound				Live Oak Avenue Westbound				I-605 Northbound Off Ramp Northbound				Live Oak Avenue Eastbound				
Start Time	Left	Thru	Right	App. Total	Left	Thru	Right	App. Total	Left	Thru	Right	App. Total	Left	Thru	Right	App. Total	Int. Total
Peak Hour Analysis From 07:00 AM to 07:45 AM - Peak 1 of 1																	
Peak Hour for Each Approach Begins at:																	
	07:00 AM				07:00 AM				07:00 AM				07:00 AM				
+0 mins.	0	0	94	94	0	**304**	0	**304**	0	0	90	90	0	48	0	48	
+15 mins.	0	0	77	77	0	266	0	266	0	0	90	90	0	52	0	52	
+30 mins.	0	0	107	107	0	218	0	218	0	0	97	97	0	60	0	60	
+45 mins.	0	0	**111**	**111**	0	247	0	247	0	0	**118**	**118**	0	**83**	0	**83**	
Total Volume	0	0	389	389	0	1035	0	1035	0	0	395	395	0	243	0	243	
% App. Total	0	0	100		0	100	0		0	0	100		0	100	0		
PHF	.000	.000	.876	.876	.000	.851	.000	.851	.000	.000	.837	.837	.000	.732	.000	.732	

Counts Unlimited
PO Box 1178
Corona, CA 92878
(951) 268-6268

City of Irwindale
N/S: I-605 Northbound Off Ramps
E/W: Live Oak Avenue
Weather: Clear

File Name : 08_IRW_605N Lo AM
Site Code : 05117783
Start Date : 11/28/2017
Page No : 1

Groups Printed- Large 2 Axle Vehicles

	I-605 Northbound Off Ramp Southbound					Live Oak Avenue Westbound					I-605 Northbound Off Ramp Northbound					Live Oak Avenue Eastbound							
Start Time	Left	Thru	Right	RTOR	App. Total	Left	Thru	Right	RTOR	App. Total	Left	Thru	Right	RTOR	App. Total	Left	Thru	Right	RTOR	App. Total	Exclu. Total	Inclu. Total	Int. Total
07:00 AM	0	0	1	0	1	0	12	0	0	12	0	0	3	0	3	0	3	0	0	3	0	19	19
07:15 AM	0	0	4	0	4	0	14	0	0	14	0	0	5	0	5	0	5	0	0	5	0	28	28
07:30 AM	0	0	1	0	1	0	18	0	0	18	0	0	5	0	5	0	1	0	0	1	0	25	25
07:45 AM	0	0	4	0	4	0	24	0	0	24	0	0	4	0	4	0	3	0	0	3	0	35	35
Total	0	0	10	0	10	0	68	0	0	68	0	0	17	0	17	0	12	0	0	12	0	107	107
08:00 AM	0	0	3	0	3	0	7	0	0	7	0	0	10	0	10	0	2	0	0	2	0	22	22
08:15 AM	0	0	3	0	3	0	13	0	0	13	0	0	8	0	8	0	6	0	0	6	0	30	30
08:30 AM	0	0	1	0	1	0	15	0	0	15	0	0	4	0	4	0	1	0	0	1	0	21	21
08:45 AM	0	0	5	0	5	0	16	0	0	16	0	0	6	0	6	0	4	0	0	4	0	31	31
Total	0	0	12	0	12	0	51	0	0	51	0	0	28	0	28	0	13	0	0	13	0	104	104
Grand Total	0	0	22	0	22	0	119	0	0	119	0	0	45	0	45	0	25	0	0	25	0	211	211
Apprch %	0	0	100			0	100	0			0	0	100			0	100	0					
Total %	0	0	10.4		10.4	0	56.4	0		56.4	0	0	21.3		21.3	0	11.8	0		11.8	0	100	

	I-605 Northbound Off Ramp Southbound				Live Oak Avenue Westbound				I-605 Northbound Off Ramp Northbound				Live Oak Avenue Eastbound				
Start Time	Left	Thru	Right	App. Total	Left	Thru	Right	App. Total	Left	Thru	Right	App. Total	Left	Thru	Right	App. Total	Int. Total
Peak Hour Analysis From 07:00 AM to 07:45 AM - Peak 1 of 1																	
Peak Hour for Entire Intersection Begins at 07:00 AM																	
07:00 AM	0	0	1	1	0	12	0	12	0	0	3	3	0	3	0	3	19
07:15 AM	0	0	**4**	**4**	0	14	0	14	0	0	**5**	**5**	0	**5**	0	**5**	28
07:30 AM	0	0	1	1	0	18	0	18	0	0	5	5	0	1	0	1	25
07:45 AM	0	0	4	4	0	**24**	0	**24**	0	0	4	4	0	3	0	3	**35**
Total Volume	0	0	10	10	0	68	0	68	0	0	17	17	0	12	0	12	107
% App. Total	0	0	100		0	100	0		0	0	100		0	100	0		
PHF	.000	.000	.625	.625	.000	.708	.000	.708	.000	.000	.850	.850	.000	.600	.000	.600	.764

Counts Unlimited
PO Box 1178
Corona, CA 92878
(951) 268-6268

City of Irwindale
N/S: I-605 Northbound Off Ramps
E/W: Live Oak Avenue
Weather: Clear

File Name : 08_IRW_605N Lo AM
Site Code : 05117783
Start Date : 11/28/2017
Page No : 2

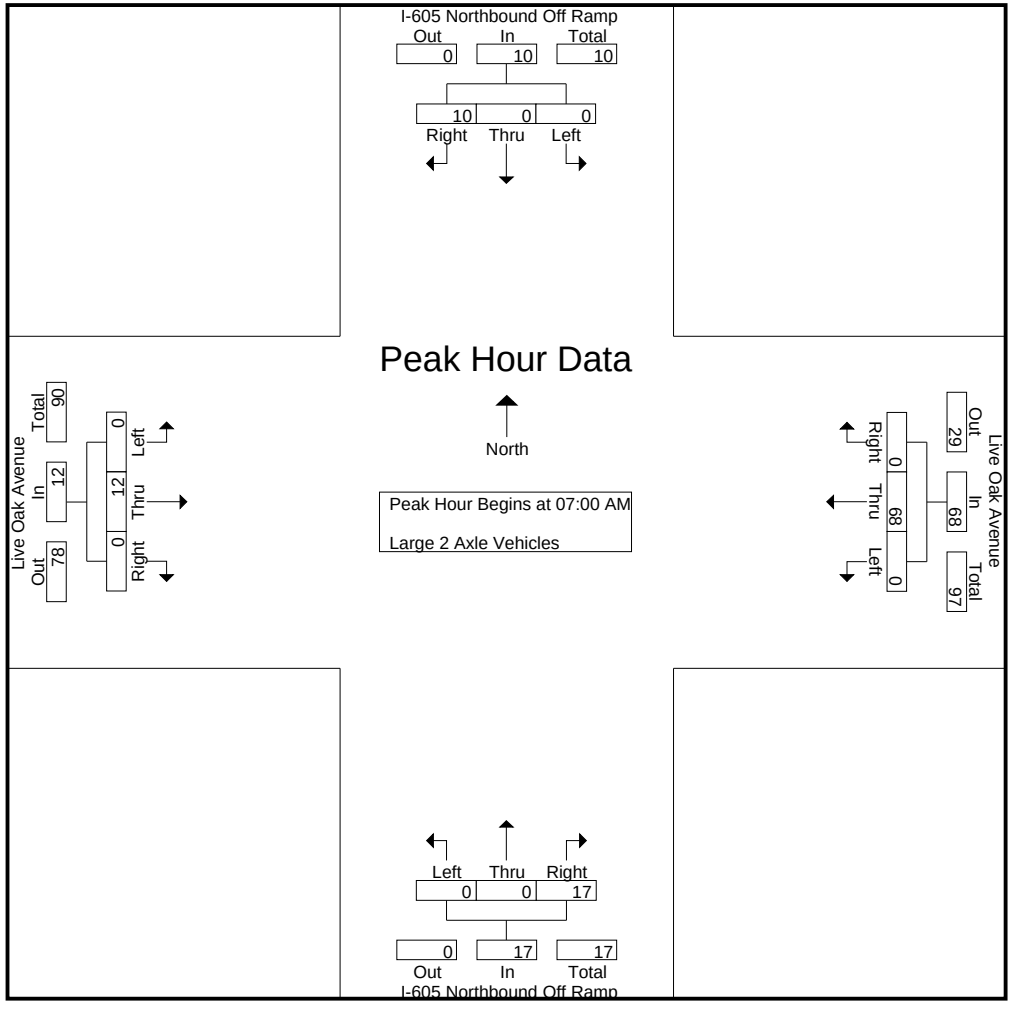

Counts Unlimited
PO Box 1178
Corona, CA 92878
(951) 268-6268

City of Irwindale
N/S: I-605 Northbound Off Ramps
E/W: Live Oak Avenue
Weather: Clear

File Name : 08_IRW_605N Lo AM
Site Code : 05117783
Start Date : 11/28/2017

	I-605 Northbound Off Ramp Southbound				Live Oak Avenue Westbound				I-605 Northbound Off Ramp Northbound				Live Oak Avenue Eastbound				
Start Time	Left	Thru	Right	App. Total	Left	Thru	Right	App. Total	Left	Thru	Right	App. Total	Left	Thru	Right	App. Total	Int. Total
Peak Hour Analysis From 07:00 AM to 07:45 AM - Peak 1 of 1																	
Peak Hour for Each Approach Begins at:																	
	07:00 AM				07:00 AM				07:00 AM				07:00 AM				
+0 mins.	0	0	1	1	0	12	0	12	0	0	3	3	0	3	0	3	
+15 mins.	0	0	**4**	**4**	0	14	0	14	0	0	**5**	**5**	0	**5**	0	**5**	
+30 mins.	0	0	1	1	0	18	0	18	0	0	5	5	0	1	0	1	
+45 mins.	0	0	4	4	0	**24**	0	**24**	0	0	4	4	0	3	0	3	
Total Volume	0	0	10	10	0	68	0	68	0	0	17	17	0	12	0	12	
% App. Total	0	0	100		0	100	0		0	0	100		0	100	0		
PHF	.000	.000	.625	.625	.000	.708	.000	.708	.000	.000	.850	.850	.000	.600	.000	.600	

Counts Unlimited
PO Box 1178
Corona, CA 92878
(951) 268-6268

City of Irwindale
N/S: I-605 Northbound Off Ramps
E/W: Live Oak Avenue
Weather: Clear

File Name : 08_IRW_605N Lo AM
Site Code : 05117783
Start Date : 11/28/2017
Page No : 1

Groups Printed- 3 Axle Vehicles

	I-605 Northbound Off Ramp Southbound					Live Oak Avenue Westbound					I-605 Northbound Off Ramp Northbound					Live Oak Avenue Eastbound							
Start Time	Left	Thru	Right	RTOR	App. Total	Left	Thru	Right	RTOR	App. Total	Left	Thru	Right	RTOR	App. Total	Left	Thru	Right	RTOR	App. Total	Exclu. Total	Inclu. Total	Int. Total
07:00 AM	0	0	5	0	5	0	17	0	0	17	0	0	1	0	1	0	1	0	0	1	0	24	24
07:15 AM	0	0	2	0	2	0	12	0	0	12	0	0	4	0	4	0	0	0	0	0	0	18	18
07:30 AM	0	0	2	0	2	0	6	0	0	6	0	0	4	0	4	0	2	0	0	2	0	14	14
07:45 AM	0	0	1	0	1	0	14	0	0	14	0	0	3	0	3	0	0	0	0	0	0	18	18
Total	0	0	10	0	10	0	49	0	0	49	0	0	12	0	12	0	3	0	0	3	0	74	74
08:00 AM	0	0	5	0	5	0	7	0	0	7	0	0	3	0	3	0	1	0	0	1	0	16	16
08:15 AM	0	0	2	0	2	0	10	0	0	10	0	0	11	0	11	0	2	0	0	2	0	25	25
08:30 AM	0	0	2	0	2	0	14	0	0	14	0	0	10	0	10	0	1	0	0	1	0	27	27
08:45 AM	0	0	2	0	2	0	11	0	0	11	0	0	6	0	6	0	0	0	0	0	0	19	19
Total	0	0	11	0	11	0	42	0	0	42	0	0	30	0	30	0	4	0	0	4	0	87	87
Grand Total	0	0	21	0	21	0	91	0	0	91	0	0	42	0	42	0	7	0	0	7	0	161	161
Apprch %	0	0	100			0	100	0			0	0	100			0	100	0					
Total %	0	0	13		13	0	56.5	0		56.5	0	0	26.1		26.1	0	4.3	0		4.3	0	100	

	I-605 Northbound Off Ramp Southbound				Live Oak Avenue Westbound				I-605 Northbound Off Ramp Northbound				Live Oak Avenue Eastbound				
Start Time	Left	Thru	Right	App. Total	Left	Thru	Right	App. Total	Left	Thru	Right	App. Total	Left	Thru	Right	App. Total	Int. Total
Peak Hour Analysis From 07:00 AM to 07:45 AM - Peak 1 of 1																	
Peak Hour for Entire Intersection Begins at 07:00 AM																	
07:00 AM	0	0	**5**	**5**	0	**17**	0	**17**	0	0	1	1	0	1	0	1	**24**
07:15 AM	0	0	2	2	0	12	0	12	0	0	**4**	**4**	0	0	0	0	18
07:30 AM	0	0	2	2	0	6	0	6	0	0	4	4	0	**2**	0	**2**	14
07:45 AM	0	0	1	1	0	14	0	14	0	0	3	3	0	0	0	0	18
Total Volume	0	0	10	10	0	49	0	49	0	0	12	12	0	3	0	3	74
% App. Total	0	0	100		0	100	0		0	0	100		0	100	0		
PHF	.000	.000	.500	.500	.000	.721	.000	.721	.000	.000	.750	.750	.000	.375	.000	.375	.771

Counts Unlimited
PO Box 1178
Corona, CA 92878
(951) 268-6268

City of Irwindale
N/S: I-605 Northbound Off Ramps
E/W: Live Oak Avenue
Weather: Clear

File Name : 08_IRW_605N Lo AM
Site Code : 05117783
Start Date : 11/28/2017
Page No : 2

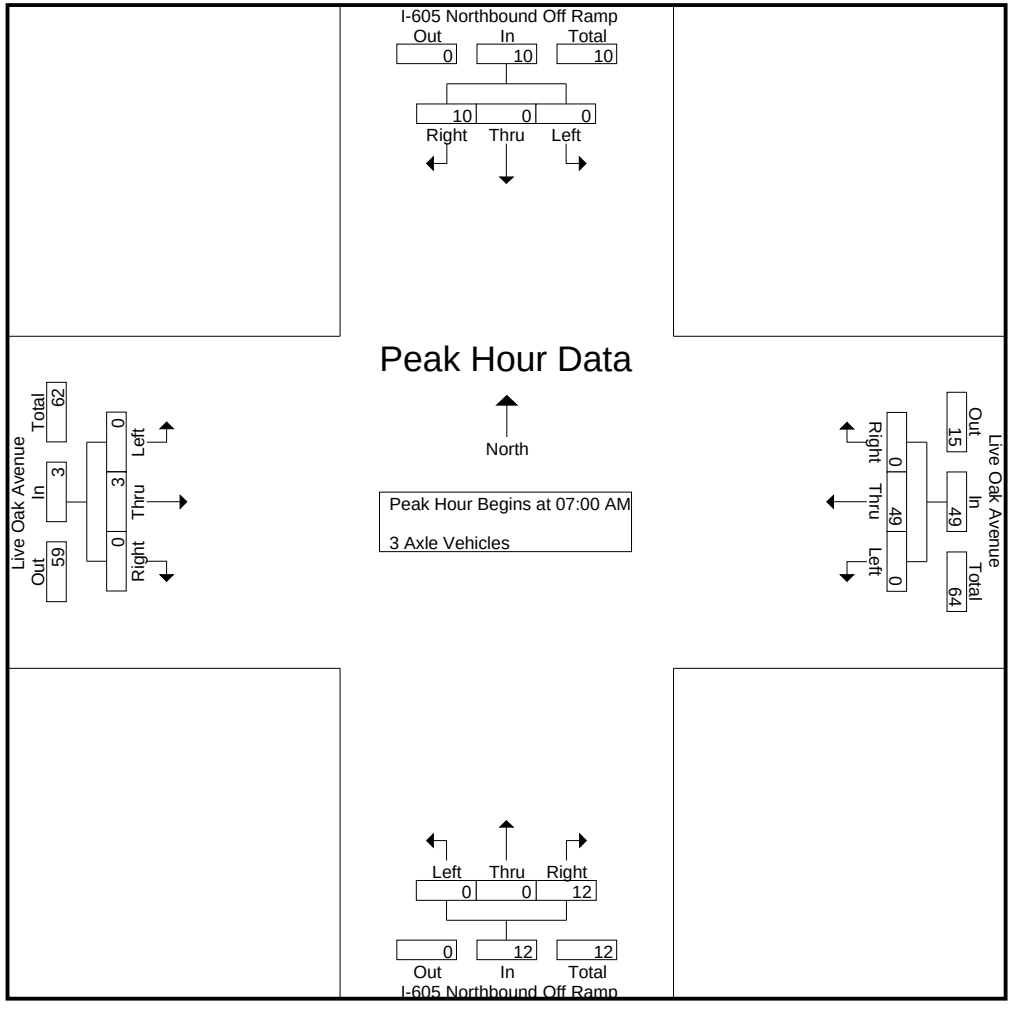

Counts Unlimited
PO Box 1178
Corona, CA 92878
(951) 268-6268

City of Irwindale
N/S: I-605 Northbound Off Ramps
E/W: Live Oak Avenue
Weather: Clear

File Name : 08_IRW_605N Lo AM
Site Code : 05117783
Start Date : 11/28/2017

	I-605 Northbound Off Ramp Southbound				Live Oak Avenue Westbound				I-605 Northbound Off Ramp Northbound				Live Oak Avenue Eastbound				
Start Time	Left	Thru	Right	App. Total	Left	Thru	Right	App. Total	Left	Thru	Right	App. Total	Left	Thru	Right	App. Total	Int. Total
Peak Hour Analysis From 07:00 AM to 07:45 AM - Peak 1 of 1																	
Peak Hour for Each Approach Begins at:																	
	07:00 AM				07:00 AM				07:00 AM				07:00 AM				
+0 mins.	0	0	**5**	**5**	0	**17**	0	**17**	0	0	1	1	0	1	0	1	
+15 mins.	0	0	2	2	0	12	0	12	0	0	**4**	**4**	0	0	0	0	
+30 mins.	0	0	2	2	0	6	0	6	0	0	4	4	0	**2**	0	**2**	
+45 mins.	0	0	1	1	0	14	0	14	0	0	3	3	0	0	0	0	
Total Volume	0	0	10	10	0	49	0	49	0	0	12	12	0	3	0	3	
% App. Total	0	0	100		0	100	0		0	0	100		0	100	0		
PHF	.000	.000	.500	.500	.000	.721	.000	.721	.000	.000	.750	.750	.000	.375	.000	.375	

Counts Unlimited
PO Box 1178
Corona, CA 92878
(951) 268-6268

City of Irwindale
N/S: I-605 Northbound Off Ramps
E/W: Live Oak Avenue
Weather: Clear

File Name : 08_IRW_605N Lo AM
Site Code : 05117783
Start Date : 11/28/2017
Page No : 1

Groups Printed- 4+ Axle Trucks

	I-605 Northbound Off Ramp Southbound					Live Oak Avenue Westbound					I-605 Northbound Off Ramp Northbound					Live Oak Avenue Eastbound							
Start Time	Left	Thru	Right	RTOR	App. Total	Left	Thru	Right	RTOR	App. Total	Left	Thru	Right	RTOR	App. Total	Left	Thru	Right	RTOR	App. Total	Exclu. Total	Inclu. Total	Int. Total
07:00 AM	0	0	4	0	4	0	11	0	0	11	0	0	13	0	13	0	1	0	0	1	0	29	29
07:15 AM	0	0	8	0	8	0	15	0	0	15	0	0	8	0	8	0	2	0	0	2	0	33	33
07:30 AM	0	0	9	0	9	0	13	0	0	13	0	0	10	0	10	0	0	0	0	0	0	32	32
07:45 AM	0	0	2	0	2	0	14	0	0	14	0	0	14	0	14	0	1	0	0	1	0	31	31
Total	0	0	23	0	23	0	53	0	0	53	0	0	45	0	45	0	4	0	0	4	0	125	125
08:00 AM	0	0	11	0	11	0	20	0	0	20	0	0	13	0	13	0	3	0	0	3	0	47	47
08:15 AM	0	0	4	0	4	0	11	0	0	11	0	0	16	0	16	0	1	0	0	1	0	32	32
08:30 AM	0	0	13	0	13	0	24	0	0	24	0	0	17	0	17	0	1	0	0	1	0	55	55
08:45 AM	0	0	11	0	11	0	23	0	0	23	0	0	14	0	14	0	2	0	0	2	0	50	50
Total	0	0	39	0	39	0	78	0	0	78	0	0	60	0	60	0	7	0	0	7	0	184	184
Grand Total	0	0	62	0	62	0	131	0	0	131	0	0	105	0	105	0	11	0	0	11	0	309	309
Apprch %	0	0	100			0	100	0			0	0	100			0	100	0					
Total %	0	0	20.1		20.1	0	42.4	0		42.4	0	0	34		34	0	3.6	0		3.6	0	100	

	I-605 Northbound Off Ramp Southbound				Live Oak Avenue Westbound				I-605 Northbound Off Ramp Northbound				Live Oak Avenue Eastbound				
Start Time	Left	Thru	Right	App. Total	Left	Thru	Right	App. Total	Left	Thru	Right	App. Total	Left	Thru	Right	App. Total	Int. Total
Peak Hour Analysis From 07:00 AM to 07:45 AM - Peak 1 of 1																	
Peak Hour for Entire Intersection Begins at 07:00 AM																	
07:00 AM	0	0	4	4	0	11	0	11	0	0	13	13	0	1	0	1	29
07:15 AM	0	0	8	8	0	**15**	0	**15**	0	0	8	8	0	**2**	0	**2**	**33**
07:30 AM	0	0	**9**	**9**	0	13	0	13	0	0	10	10	0	0	0	0	32
07:45 AM	0	0	2	2	0	14	0	14	0	0	**14**	**14**	0	1	0	1	31
Total Volume	0	0	23	23	0	53	0	53	0	0	45	45	0	4	0	4	125
% App. Total	0	0	100		0	100	0		0	0	100		0	100	0		
PHF	.000	.000	.639	.639	.000	.883	.000	.883	.000	.000	.804	.804	.000	.500	.000	.500	.947

Counts Unlimited
PO Box 1178
Corona, CA 92878
(951) 268-6268

City of Irwindale
N/S: I-605 Northbound Off Ramps
E/W: Live Oak Avenue
Weather: Clear

File Name : 08_IRW_605N Lo AM
Site Code : 05117783
Start Date : 11/28/2017
Page No : 2

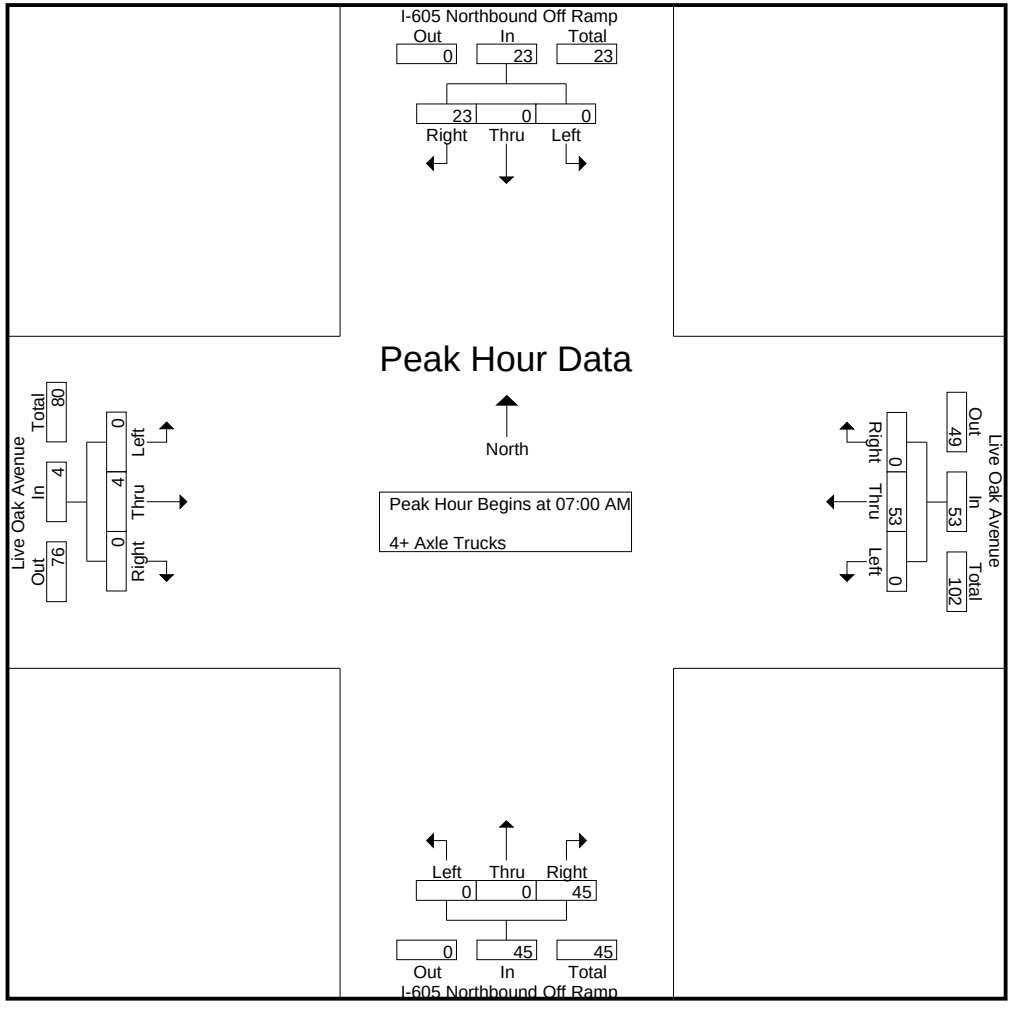

Counts Unlimited
PO Box 1178
Corona, CA 92878
(951) 268-6268

City of Irwindale
N/S: I-605 Northbound Off Ramps
E/W: Live Oak Avenue
Weather: Clear

File Name : 08_IRW_605N Lo AM
Site Code : 05117783
Start Date : 11/28/2017

	I-605 Northbound Off Ramp Southbound				Live Oak Avenue Westbound				I-605 Northbound Off Ramp Northbound				Live Oak Avenue Eastbound				
Start Time	Left	Thru	Right	App. Total	Left	Thru	Right	App. Total	Left	Thru	Right	App. Total	Left	Thru	Right	App. Total	Int. Total
Peak Hour Analysis From 07:00 AM to 07:45 AM - Peak 1 of 1																	
Peak Hour for Each Approach Begins at:																	
	07:00 AM				07:00 AM				07:00 AM				07:00 AM				
+0 mins.	0	0	4	4	0	11	0	11	0	0	13	13	0	1	0	1	
+15 mins.	0	0	8	8	0	**15**	0	**15**	0	0	8	8	0	**2**	0	**2**	
+30 mins.	0	0	**9**	**9**	0	13	0	13	0	0	10	10	0	0	0	0	
+45 mins.	0	0	2	2	0	14	0	14	0	0	**14**	**14**	0	1	0	1	
Total Volume	0	0	23	23	0	53	0	53	0	0	45	45	0	4	0	4	
% App. Total	0	0	100		0	100	0		0	0	100		0	100	0		
PHF	.000	.000	.639	.639	.000	.883	.000	.883	.000	.000	.804	.804	.000	.500	.000	.500	

Counts Unlimited
PO Box 1178
Corona, CA 92878
(951) 268-6268

City of Irwindale
N/S: I-605 Northbound Off Ramps
E/W: Live Oak Avenue
Weather: Clear

File Name : 08_IRW_605N Lo PM
Site Code : 05117783
Start Date : 11/28/2017
Page No : 1

Groups Printed- Passenger Vehicles - Large 2 Axle Vehicles - 3 Axle Vehicles - 4+ Axle Trucks

	I-605 Northbound Off Ramp Southbound					Live Oak Avenue Westbound					I-605 Northbound Off Ramp Northbound					Live Oak Avenue Eastbound							
Start Time	Left	Thru	Right	RTOR	App. Total	Left	Thru	Right	RTOR	App. Total	Left	Thru	Right	RTOR	App. Total	Left	Thru	Right	RTOR	App. Total	Exclu. Total	Inclu. Total	Int. Total
04:00 PM	0	0	148	0	148	0	219	0	0	219	0	0	171	0	171	0	186	0	0	186	0	724	724
04:15 PM	0	0	133	0	133	0	186	0	0	186	0	0	181	0	181	0	192	0	0	192	0	692	692
04:30 PM	0	0	116	0	116	0	215	0	0	215	0	0	177	0	177	0	203	0	0	203	0	711	711
04:45 PM	0	0	106	0	106	0	239	0	0	239	0	0	151	0	151	0	251	0	0	251	0	747	747
Total	0	0	503	0	503	0	859	0	0	859	0	0	680	0	680	0	832	0	0	832	0	2874	2874
05:00 PM	0	0	144	0	144	0	245	0	0	245	0	0	156	0	156	0	247	0	0	247	0	792	792
05:15 PM	0	0	140	0	140	0	249	0	0	249	0	0	157	0	157	0	254	0	0	254	0	800	800
05:30 PM	0	0	133	0	133	0	211	0	0	211	0	0	157	0	157	0	260	0	0	260	0	761	761
05:45 PM	0	0	153	0	153	0	180	0	0	180	0	0	184	0	184	0	221	0	0	221	0	738	738
Total	0	0	570	0	570	0	885	0	0	885	0	0	654	0	654	0	982	0	0	982	0	3091	3091
Grand Total	0	0	1073	0	1073	0	1744	0	0	1744	0	0	1334	0	1334	0	1814	0	0	1814	0	5965	5965
Apprch %	0	0	100			0	100	0			0	0	100			0	100	0					
Total %	0	0	18		18	0	29.2	0		29.2	0	0	22.4		22.4	0	30.4	0		30.4	0	100	
Passenger Vehicles	0	0	987		987	0	1641	0		1641	0	0	1255		1255	0	1743	0		1743	0	0	5626
% Passenger Vehicles	0	0	92	0	92	0	94.1	0	0	94.1	0	0	94.1	0	94.1	0	96.1	0	0	96.1	0	0	94.3
Large 2 Axle Vehicles	0	0	29		29	0	37	0		37	0	0	46		46	0	47	0		47	0	0	159
% Large 2 Axle Vehicles	0	0	2.7	0	2.7	0	2.1	0	0	2.1	0	0	3.4	0	3.4	0	2.6	0	0	2.6	0	0	2.7
3 Axle Vehicles	0	0	9		9	0	25	0		25	0	0	9		9	0	18	0		18	0	0	61
% 3 Axle Vehicles	0	0	0.8	0	0.8	0	1.4	0	0	1.4	0	0	0.7	0	0.7	0	1	0	0	1	0	0	1
4+ Axle Trucks	0	0	48		48	0	41	0		41	0	0	24		24	0	6	0		6	0	0	119
% 4+ Axle Trucks	0	0	4.5	0	4.5	0	2.4	0	0	2.4	0	0	1.8	0	1.8	0	0.3	0	0	0.3	0	0	2

	I-605 Northbound Off Ramp Southbound				Live Oak Avenue Westbound				I-605 Northbound Off Ramp Northbound				Live Oak Avenue Eastbound				
Start Time	Left	Thru	Right	App. Total	Left	Thru	Right	App. Total	Left	Thru	Right	App. Total	Left	Thru	Right	App. Total	Int. Total
Peak Hour Analysis From 04:00 PM to 05:45 PM - Peak 1 of 1																	
Peak Hour for Entire Intersection Begins at 04:45 PM																	
04:45 PM	0	0	106	106	0	239	0	239	0	0	151	151	0	251	0	251	747
05:00 PM	0	0	**144**	**144**	0	245	0	245	0	0	156	156	0	247	0	247	792
05:15 PM	0	0	140	140	0	**249**	0	**249**	0	0	**157**	**157**	0	254	0	254	**800**
05:30 PM	0	0	133	133	0	211	0	211	0	0	157	157	0	**260**	0	**260**	761
Total Volume	0	0	523	523	0	944	0	944	0	0	621	621	0	1012	0	1012	3100
% App. Total	0	0	100		0	100	0		0	0	100		0	100	0		
PHF	.000	.000	.908	.908	.000	.948	.000	.948	.000	.000	.989	.989	.000	.973	.000	.973	.969

Counts Unlimited
PO Box 1178
Corona, CA 92878
(951) 268-6268

City of Irwindale
N/S: I-605 Northbound Off Ramps
E/W: Live Oak Avenue
Weather: Clear

File Name : 08_IRW_605N Lo PM
Site Code : 05117783
Start Date : 11/28/2017
Page No : 2

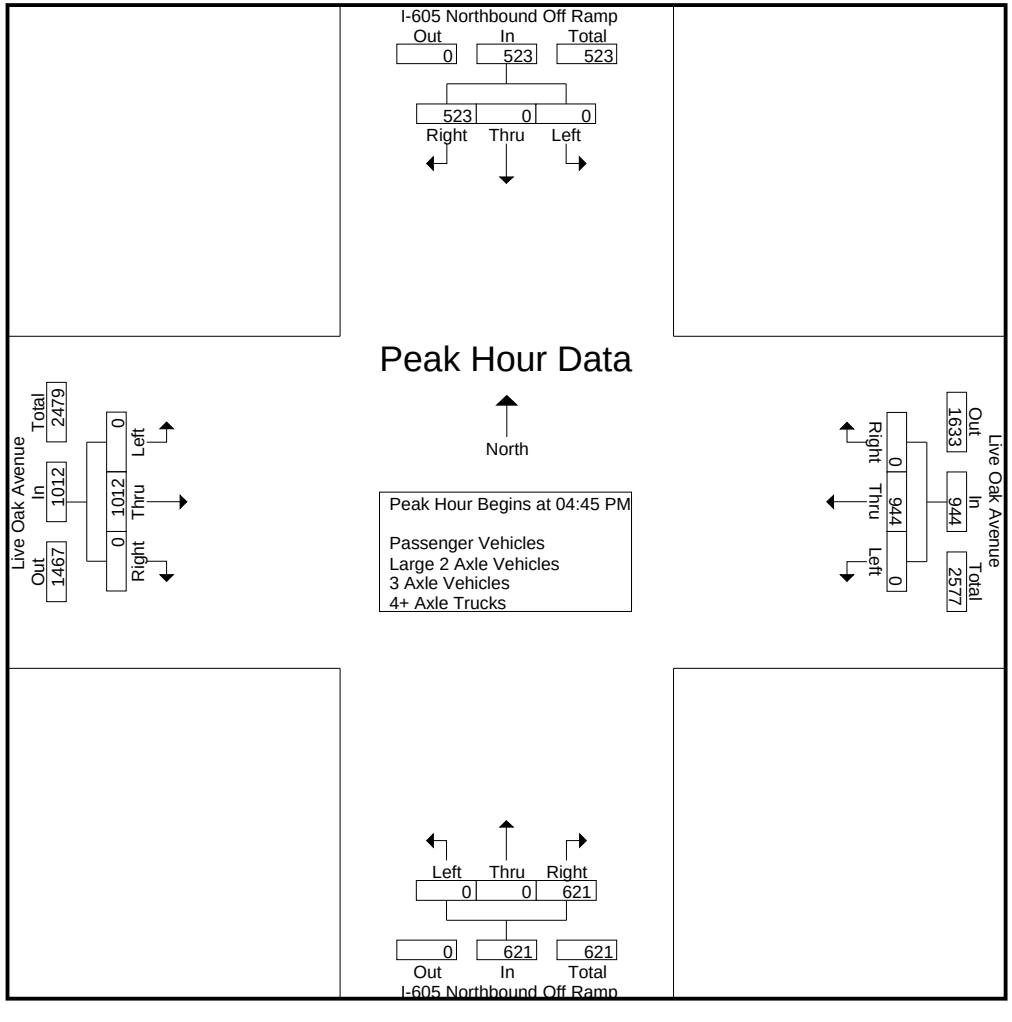

Counts Unlimited
PO Box 1178
Corona, CA 92878
(951) 268-6268

City of Irwindale
N/S: I-605 Northbound Off Ramps
E/W: Live Oak Avenue
Weather: Clear

File Name : 08_IRW_605N Lo PM
Site Code : 05117783
Start Date : 11/28/2017
Page No : 3

	I-605 Northbound Off Ramp Southbound				Live Oak Avenue Westbound				I-605 Northbound Off Ramp Northbound				Live Oak Avenue Eastbound				
Start Time	Left	Thru	Right	App. Total	Left	Thru	Right	App. Total	Left	Thru	Right	App. Total	Left	Thru	Right	App. Total	Int. Total
Peak Hour Analysis From 04:00 PM to 05:45 PM - Peak 1 of 1																	
Peak Hour for Each Approach Begins at:																	
	05:00 PM				04:30 PM				04:00 PM				04:45 PM				
+0 mins.	0	0	144	144	0	215	0	215	0	0	171	171	0	251	0	251	
+15 mins.	0	0	140	140	0	239	0	239	0	0	**181**	**181**	0	247	0	247	
+30 mins.	0	0	133	133	0	245	0	245	0	0	177	177	0	254	0	254	
+45 mins.	0	0	**153**	**153**	0	**249**	0	**249**	0	0	151	151	0	**260**	0	**260**	
Total Volume	0	0	570	570	0	948	0	948	0	0	680	680	0	1012	0	1012	
% App. Total	0	0	100		0	100	0		0	0	100		0	100	0		
PHF	.000	.000	.931	.931	.000	.952	.000	.952	.000	.000	.939	.939	.000	.973	.000	.973	

Counts Unlimited
PO Box 1178
Corona, CA 92878
(951) 268-6268

City of Irwindale
N/S: I-605 Northbound Off Ramps
E/W: Live Oak Avenue
Weather: Clear

File Name : 08_IRW_605N Lo PM
Site Code : 05117783
Start Date : 11/28/2017
Page No : 1

Groups Printed- Passenger Vehicles

	I-605 Northbound Off Ramp Southbound					Live Oak Avenue Westbound					I-605 Northbound Off Ramp Northbound					Live Oak Avenue Eastbound							
Start Time	Left	Thru	Right	RTOR	App. Total	Left	Thru	Right	RTOR	App. Total	Left	Thru	Right	RTOR	App. Total	Left	Thru	Right	RTOR	App. Total	Exclu. Total	Inclu. Total	Int. Total
04:00 PM	0	0	128	0	128	0	202	0	0	202	0	0	153	0	153	0	176	0	0	176	0	659	659
04:15 PM	0	0	117	0	117	0	162	0	0	162	0	0	167	0	167	0	181	0	0	181	0	627	627
04:30 PM	0	0	105	0	105	0	204	0	0	204	0	0	164	0	164	0	191	0	0	191	0	664	664
04:45 PM	0	0	99	0	99	0	224	0	0	224	0	0	145	0	145	0	239	0	0	239	0	707	707
Total	0	0	449	0	449	0	792	0	0	792	0	0	629	0	629	0	787	0	0	787	0	2657	2657
05:00 PM	0	0	132	0	132	0	235	0	0	235	0	0	150	0	150	0	242	0	0	242	0	759	759
05:15 PM	0	0	133	0	133	0	238	0	0	238	0	0	149	0	149	0	242	0	0	242	0	762	762
05:30 PM	0	0	126	0	126	0	205	0	0	205	0	0	153	0	153	0	255	0	0	255	0	739	739
05:45 PM	0	0	147	0	147	0	171	0	0	171	0	0	174	0	174	0	217	0	0	217	0	709	709
Total	0	0	538	0	538	0	849	0	0	849	0	0	626	0	626	0	956	0	0	956	0	2969	2969
Grand Total	0	0	987	0	987	0	1641	0	0	1641	0	0	1255	0	1255	0	1743	0	0	1743	0	5626	5626
Apprch %	0	0	100			0	100	0			0	0	100			0	100	0					
Total %	0	0	17.5		17.5	0	29.2	0		29.2	0	0	22.3		22.3	0	31	0		31	0	100	

	I-605 Northbound Off Ramp Southbound				Live Oak Avenue Westbound				I-605 Northbound Off Ramp Northbound				Live Oak Avenue Eastbound				
Start Time	Left	Thru	Right	App. Total	Left	Thru	Right	App. Total	Left	Thru	Right	App. Total	Left	Thru	Right	App. Total	Int. Total
Peak Hour Analysis From 04:45 PM to 05:30 PM - Peak 1 of 1																	
Peak Hour for Entire Intersection Begins at 04:45 PM																	
04:45 PM	0	0	99	99	0	224	0	224	0	0	145	145	0	239	0	239	707
05:00 PM	0	0	132	132	0	235	0	235	0	0	150	150	0	242	0	242	759
05:15 PM	0	0	**133**	**133**	0	**238**	0	**238**	0	0	149	149	0	242	0	242	**762**
05:30 PM	0	0	126	126	0	205	0	205	0	0	**153**	**153**	0	**255**	0	**255**	739
Total Volume	0	0	490	490	0	902	0	902	0	0	597	597	0	978	0	978	2967
% App. Total	0	0	100		0	100	0		0	0	100		0	100	0		
PHF	.000	.000	.921	.921	.000	.947	.000	.947	.000	.000	.975	.975	.000	.959	.000	.959	.973

Counts Unlimited
PO Box 1178
Corona, CA 92878
(951) 268-6268

City of Irwindale
N/S: I-605 Northbound Off Ramps
E/W: Live Oak Avenue
Weather: Clear

File Name : 08_IRW_605N Lo PM
Site Code : 05117783
Start Date : 11/28/2017
Page No : 2

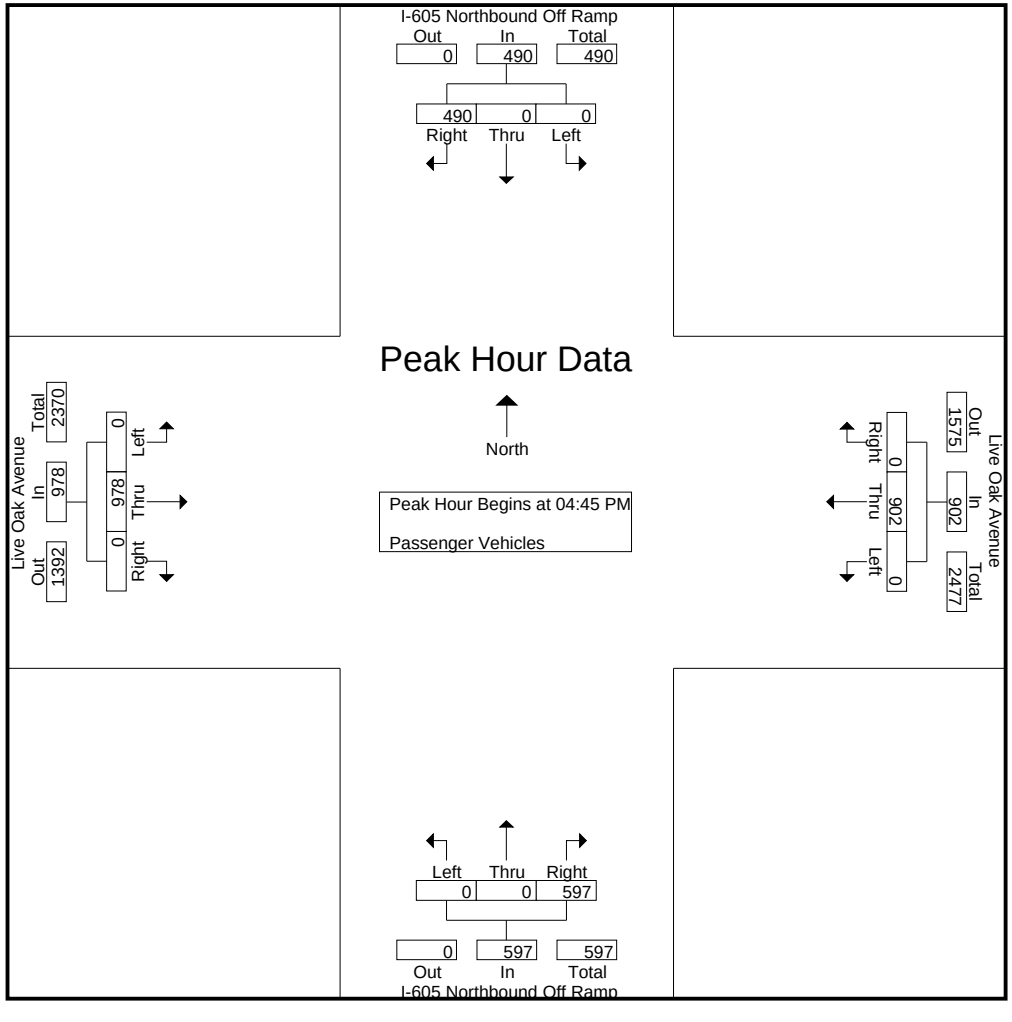

Counts Unlimited
PO Box 1178
Corona, CA 92878
(951) 268-6268

City of Irwindale
N/S: I-605 Northbound Off Ramps
E/W: Live Oak Avenue
Weather: Clear

File Name : 08_IRW_605N Lo PM
Site Code : 05117783
Start Date : 11/28/2017
Page No : 3

	I-605 Northbound Off Ramp Southbound				Live Oak Avenue Westbound				I-605 Northbound Off Ramp Northbound				Live Oak Avenue Eastbound				
Start Time	Left	Thru	Right	App. Total	Left	Thru	Right	App. Total	Left	Thru	Right	App. Total	Left	Thru	Right	App. Total	Int. Total
Peak Hour Analysis From 04:45 PM to 05:30 PM - Peak 1 of 1																	
Peak Hour for Each Approach Begins at:																	
	04:45 PM				04:45 PM				04:45 PM				04:45 PM				
+0 mins.	0	0	99	99	0	224	0	224	0	0	145	145	0	239	0	239	
+15 mins.	0	0	132	132	0	235	0	235	0	0	150	150	0	242	0	242	
+30 mins.	0	0	**133**	**133**	0	**238**	0	**238**	0	0	149	149	0	242	0	242	
+45 mins.	0	0	126	126	0	205	0	205	0	0	**153**	**153**	0	**255**	0	**255**	
Total Volume	0	0	490	490	0	902	0	902	0	0	597	597	0	978	0	978	
% App. Total	0	0	100		0	100	0		0	0	100		0	100	0		
PHF	.000	.000	.921	.921	.000	.947	.000	.947	.000	.000	.975	.975	.000	.959	.000	.959	

Counts Unlimited
PO Box 1178
Corona, CA 92878
(951) 268-6268

City of Irwindale
N/S: I-605 Northbound Off Ramps
E/W: Live Oak Avenue
Weather: Clear

File Name : 08_IRW_605N Lo PM
Site Code : 05117783
Start Date : 11/28/2017
Page No : 1

Groups Printed- Large 2 Axle Vehicles

	I-605 Northbound Off Ramp Southbound					Live Oak Avenue Westbound					I-605 Northbound Off Ramp Northbound					Live Oak Avenue Eastbound							
Start Time	Left	Thru	Right	RTOR	App. Total	Left	Thru	Right	RTOR	App. Total	Left	Thru	Right	RTOR	App. Total	Left	Thru	Right	RTOR	App. Total	Exclu. Total	Inclu. Total	Int. Total
04:00 PM	0	0	6	0	6	0	5	0	0	5	0	0	11	0	11	0	6	0	0	6	0	28	28
04:15 PM	0	0	6	0	6	0	7	0	0	7	0	0	8	0	8	0	6	0	0	6	0	27	27
04:30 PM	0	0	2	0	2	0	4	0	0	4	0	0	6	0	6	0	8	0	0	8	0	20	20
04:45 PM	0	0	1	0	1	0	2	0	0	2	0	0	2	0	2	0	7	0	0	7	0	12	12
Total	0	0	15	0	15	0	18	0	0	18	0	0	27	0	27	0	27	0	0	27	0	87	87
05:00 PM	0	0	6	0	6	0	4	0	0	4	0	0	5	0	5	0	5	0	0	5	0	20	20
05:15 PM	0	0	4	0	4	0	8	0	0	8	0	0	6	0	6	0	7	0	0	7	0	25	25
05:30 PM	0	0	2	0	2	0	3	0	0	3	0	0	1	0	1	0	5	0	0	5	0	11	11
05:45 PM	0	0	2	0	2	0	4	0	0	4	0	0	7	0	7	0	3	0	0	3	0	16	16
Total	0	0	14	0	14	0	19	0	0	19	0	0	19	0	19	0	20	0	0	20	0	72	72
Grand Total	0	0	29	0	29	0	37	0	0	37	0	0	46	0	46	0	47	0	0	47	0	159	159
Apprch %	0	0	100			0	100	0			0	0	100			0	100	0					
Total %	0	0	18.2		18.2	0	23.3	0		23.3	0	0	28.9		28.9	0	29.6	0		29.6	0	100	

	I-605 Northbound Off Ramp Southbound				Live Oak Avenue Westbound				I-605 Northbound Off Ramp Northbound				Live Oak Avenue Eastbound				
Start Time	Left	Thru	Right	App. Total	Left	Thru	Right	App. Total	Left	Thru	Right	App. Total	Left	Thru	Right	App. Total	Int. Total
Peak Hour Analysis From 04:45 PM to 05:30 PM - Peak 1 of 1																	
Peak Hour for Entire Intersection Begins at 04:45 PM																	
04:45 PM	0	0	1	1	0	2	0	2	0	0	2	2	0	**7**	0	**7**	12
05:00 PM	0	0	**6**	**6**	0	4	0	4	0	0	5	5	0	5	0	5	20
05:15 PM	0	0	4	4	0	**8**	0	**8**	0	0	**6**	**6**	0	7	0	7	**25**
05:30 PM	0	0	2	2	0	3	0	3	0	0	1	1	0	5	0	5	11
Total Volume	0	0	13	13	0	17	0	17	0	0	14	14	0	24	0	24	68
% App. Total	0	0	100		0	100	0		0	0	100		0	100	0		
PHF	.000	.000	.542	.542	.000	.531	.000	.531	.000	.000	.583	.583	.000	.857	.000	.857	.680

Counts Unlimited
PO Box 1178
Corona, CA 92878
(951) 268-6268

City of Irwindale
N/S: I-605 Northbound Off Ramps
E/W: Live Oak Avenue
Weather: Clear

File Name : 08_IRW_605N Lo PM
Site Code : 05117783
Start Date : 11/28/2017
Page No : 2

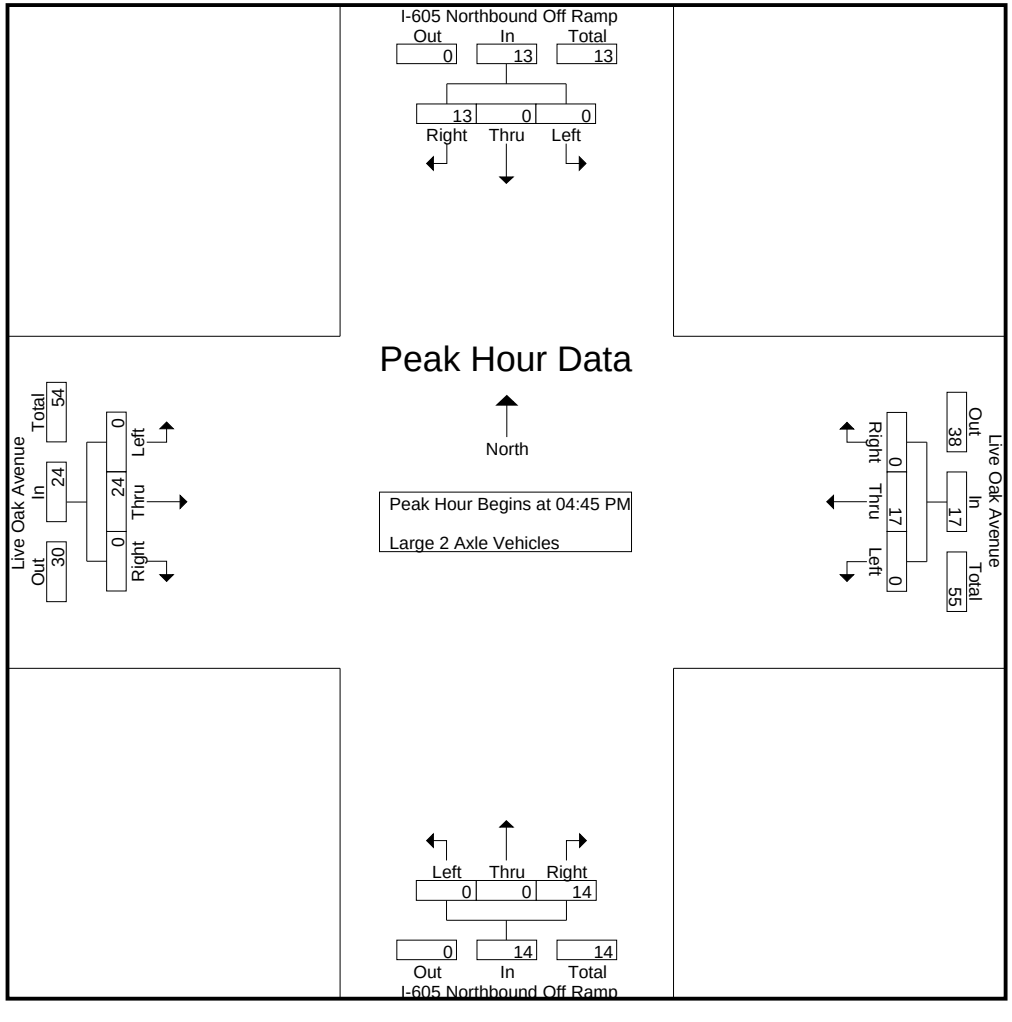

Counts Unlimited
PO Box 1178
Corona, CA 92878
(951) 268-6268

City of Irwindale
N/S: I-605 Northbound Off Ramps
E/W: Live Oak Avenue
Weather: Clear

File Name : 08_IRW_605N Lo PM
Site Code : 05117783
Start Date : 11/28/2017

	I-605 Northbound Off Ramp Southbound				Live Oak Avenue Westbound				I-605 Northbound Off Ramp Northbound				Live Oak Avenue Eastbound				
Start Time	Left	Thru	Right	App. Total	Left	Thru	Right	App. Total	Left	Thru	Right	App. Total	Left	Thru	Right	App. Total	Int. Total
Peak Hour Analysis From 04:45 PM to 05:30 PM - Peak 1 of 1																	
Peak Hour for Each Approach Begins at:																	
	04:45 PM				04:45 PM				04:45 PM				04:45 PM				
+0 mins.	0	0	1	1	0	2	0	2	0	0	2	2	0	**7**	0	**7**	
+15 mins.	0	0	**6**	**6**	0	4	0	4	0	0	5	5	0	5	0	5	
+30 mins.	0	0	4	4	0	**8**	0	**8**	0	0	**6**	**6**	0	7	0	7	
+45 mins.	0	0	2	2	0	3	0	3	0	0	1	1	0	5	0	5	
Total Volume	0	0	13	13	0	17	0	17	0	0	14	14	0	24	0	24	
% App. Total	0	0	100		0	100	0		0	0	100		0	100	0		
PHF	.000	.000	.542	.542	.000	.531	.000	.531	.000	.000	.583	.583	.000	.857	.000	.857	

Counts Unlimited
PO Box 1178
Corona, CA 92878
(951) 268-6268

City of Irwindale
N/S: I-605 Northbound Off Ramps
E/W: Live Oak Avenue
Weather: Clear

File Name : 08_IRW_605N Lo PM
Site Code : 05117783
Start Date : 11/28/2017
Page No : 1

Groups Printed- 3 Axle Vehicles

	I-605 Northbound Off Ramp Southbound					Live Oak Avenue Westbound					I-605 Northbound Off Ramp Northbound					Live Oak Avenue Eastbound							
Start Time	Left	Thru	Right	RTOR	App. Total	Left	Thru	Right	RTOR	App. Total	Left	Thru	Right	RTOR	App. Total	Left	Thru	Right	RTOR	App. Total	Exclu. Total	Inclu. Total	Int. Total
04:00 PM	0	0	3	0	3	0	5	0	0	5	0	0	2	0	2	0	3	0	0	3	0	13	13
04:15 PM	0	0	2	0	2	0	9	0	0	9	0	0	1	0	1	0	3	0	0	3	0	15	15
04:30 PM	0	0	0	0	0	0	2	0	0	2	0	0	3	0	3	0	2	0	0	2	0	7	7
04:45 PM	0	0	2	0	2	0	2	0	0	2	0	0	1	0	1	0	4	0	0	4	0	9	9
Total	0	0	7	0	7	0	18	0	0	18	0	0	7	0	7	0	12	0	0	12	0	44	44
05:00 PM	0	0	2	0	2	0	1	0	0	1	0	0	0	0	0	0	0	0	0	0	0	3	3
05:15 PM	0	0	0	0	0	0	2	0	0	2	0	0	1	0	1	0	5	0	0	5	0	8	8
05:30 PM	0	0	0	0	0	0	0	0	0	0	0	0	0	0	0	0	0	0	0	0	0	0	0
05:45 PM	0	0	0	0	0	0	4	0	0	4	0	0	1	0	1	0	1	0	0	1	0	6	6
Total	0	0	2	0	2	0	7	0	0	7	0	0	2	0	2	0	6	0	0	6	0	17	17
Grand Total	0	0	9	0	9	0	25	0	0	25	0	0	9	0	9	0	18	0	0	18	0	61	61
Apprch %	0	0	100			0	100	0			0	0	100			0	100	0					
Total %	0	0	14.8		14.8	0	41	0		41	0	0	14.8		14.8	0	29.5	0		29.5	0	100	

	I-605 Northbound Off Ramp Southbound				Live Oak Avenue Westbound				I-605 Northbound Off Ramp Northbound				Live Oak Avenue Eastbound				
Start Time	Left	Thru	Right	App. Total	Left	Thru	Right	App. Total	Left	Thru	Right	App. Total	Left	Thru	Right	App. Total	Int. Total
Peak Hour Analysis From 04:45 PM to 05:30 PM - Peak 1 of 1																	
Peak Hour for Entire Intersection Begins at 04:45 PM																	
04:45 PM	0	0	**2**	**2**	0	**2**	0	**2**	0	0	**1**	**1**	0	4	0	4	**9**
05:00 PM	0	0	2	2	0	1	0	1	0	0	0	0	0	0	0	0	3
05:15 PM	0	0	0	0	0	2	0	2	0	0	1	1	0	**5**	0	**5**	8
05:30 PM	0	0	0	0	0	0	0	0	0	0	0	0	0	0	0	0	0
Total Volume	0	0	4	4	0	5	0	5	0	0	2	2	0	9	0	9	20
% App. Total	0	0	100		0	100	0		0	0	100		0	100	0		
PHF	.000	.000	.500	.500	.000	.625	.000	.625	.000	.000	.500	.500	.000	.450	.000	.450	.556

Counts Unlimited
PO Box 1178
Corona, CA 92878
(951) 268-6268

City of Irwindale
N/S: I-605 Northbound Off Ramps
E/W: Live Oak Avenue
Weather: Clear

File Name : 08_IRW_605N Lo PM
Site Code : 05117783
Start Date : 11/28/2017
Page No : 2

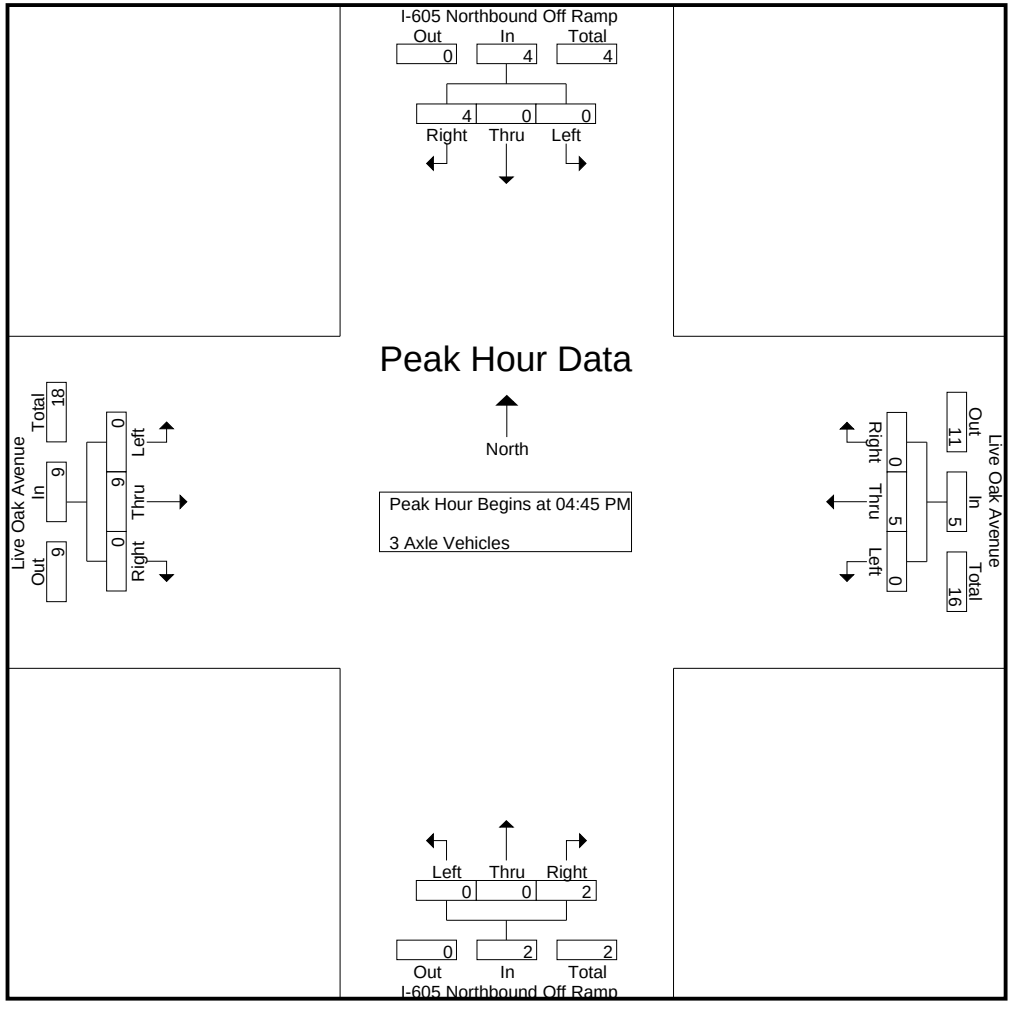

Counts Unlimited
PO Box 1178
Corona, CA 92878
(951) 268-6268

City of Irwindale
N/S: I-605 Northbound Off Ramps
E/W: Live Oak Avenue
Weather: Clear

File Name : 08_IRW_605N Lo PM
Site Code : 05117783
Start Date : 11/28/2017

	I-605 Northbound Off Ramp Southbound				Live Oak Avenue Westbound				I-605 Northbound Off Ramp Northbound				Live Oak Avenue Eastbound				
Start Time	Left	Thru	Right	App. Total	Left	Thru	Right	App. Total	Left	Thru	Right	App. Total	Left	Thru	Right	App. Total	Int. Total
Peak Hour Analysis From 04:45 PM to 05:30 PM - Peak 1 of 1																	
Peak Hour for Each Approach Begins at:																	
	04:45 PM				04:45 PM				04:45 PM				04:45 PM				
+0 mins.	0	0	**2**	**2**	0	**2**	0	**2**	0	0	**1**	**1**	0	4	0	4	
+15 mins.	0	0	2	2	0	1	0	1	0	0	0	0	0	0	0	0	
+30 mins.	0	0	0	0	0	2	0	2	0	0	1	1	0	**5**	0	**5**	
+45 mins.	0	0	0	0	0	0	0	0	0	0	0	0	0	0	0	0	
Total Volume	0	0	4	4	0	5	0	5	0	0	2	2	0	9	0	9	
% App. Total	0	0	100		0	100	0		0	0	100		0	100	0		
PHF	.000	.000	.500	.500	.000	.625	.000	.625	.000	.000	.500	.500	.000	.450	.000	.450	

Counts Unlimited
PO Box 1178
Corona, CA 92878
(951) 268-6268

City of Irwindale
N/S: I-605 Northbound Off Ramps
E/W: Live Oak Avenue
Weather: Clear

File Name : 08_IRW_605N Lo PM
Site Code : 05117783
Start Date : 11/28/2017

Groups Printed- 4+ Axle Trucks

	I-605 Northbound Off Ramp Southbound					Live Oak Avenue Westbound					I-605 Northbound Off Ramp Northbound					Live Oak Avenue Eastbound							
Start Time	Left	Thru	Right	RTOR	App. Total	Left	Thru	Right	RTOR	App. Total	Left	Thru	Right	RTOR	App. Total	Left	Thru	Right	RTOR	App. Total	Exclu. Total	Inclu. Total	Int. Total
04:00 PM	0	0	11	0	11	0	7	0	0	7	0	0	5	0	5	0	1	0	0	1	0	24	24
04:15 PM	0	0	8	0	8	0	8	0	0	8	0	0	5	0	5	0	2	0	0	2	0	23	23
04:30 PM	0	0	9	0	9	0	5	0	0	5	0	0	4	0	4	0	2	0	0	2	0	20	20
04:45 PM	0	0	4	0	4	0	11	0	0	11	0	0	3	0	3	0	1	0	0	1	0	19	19
Total	0	0	32	0	32	0	31	0	0	31	0	0	17	0	17	0	6	0	0	6	0	86	86
05:00 PM	0	0	4	0	4	0	5	0	0	5	0	0	1	0	1	0	0	0	0	0	0	10	10
05:15 PM	0	0	3	0	3	0	1	0	0	1	0	0	1	0	1	0	0	0	0	0	0	5	5
05:30 PM	0	0	5	0	5	0	3	0	0	3	0	0	3	0	3	0	0	0	0	0	0	11	11
05:45 PM	0	0	4	0	4	0	1	0	0	1	0	0	2	0	2	0	0	0	0	0	0	7	7
Total	0	0	16	0	16	0	10	0	0	10	0	0	7	0	7	0	0	0	0	0	0	33	33
Grand Total	0	0	48	0	48	0	41	0	0	41	0	0	24	0	24	0	6	0	0	6	0	119	119
Apprch %	0	0	100			0	100	0			0	0	100			0	100	0					
Total %	0	0	40.3		40.3	0	34.5	0		34.5	0	0	20.2		20.2	0	5	0		5	0	100	

	I-605 Northbound Off Ramp Southbound				Live Oak Avenue Westbound				I-605 Northbound Off Ramp Northbound				Live Oak Avenue Eastbound				
Start Time	Left	Thru	Right	App. Total	Left	Thru	Right	App. Total	Left	Thru	Right	App. Total	Left	Thru	Right	App. Total	Int. Total
Peak Hour Analysis From 04:45 PM to 05:30 PM - Peak 1 of 1																	
Peak Hour for Entire Intersection Begins at 04:45 PM																	
04:45 PM	0	0	4	4	0	**11**	0	**11**	0	0	**3**	**3**	0	**1**	0	**1**	**19**
05:00 PM	0	0	4	4	0	5	0	5	0	0	1	1	0	0	0	0	10
05:15 PM	0	0	3	3	0	1	0	1	0	0	1	1	0	0	0	0	5
05:30 PM	0	0	**5**	**5**	0	3	0	3	0	0	3	3	0	0	0	0	11
Total Volume	0	0	16	16	0	20	0	20	0	0	8	8	0	1	0	1	45
% App. Total	0	0	100		0	100	0		0	0	100		0	100	0		
PHF	.000	.000	.800	.800	.000	.455	.000	.455	.000	.000	.667	.667	.000	.250	.000	.250	.592

Counts Unlimited
PO Box 1178
Corona, CA 92878
(951) 268-6268

City of Irwindale
N/S: I-605 Northbound Off Ramps
E/W: Live Oak Avenue
Weather: Clear

File Name : 08_IRW_605N Lo PM
Site Code : 05117783
Start Date : 11/28/2017
Page No : 2

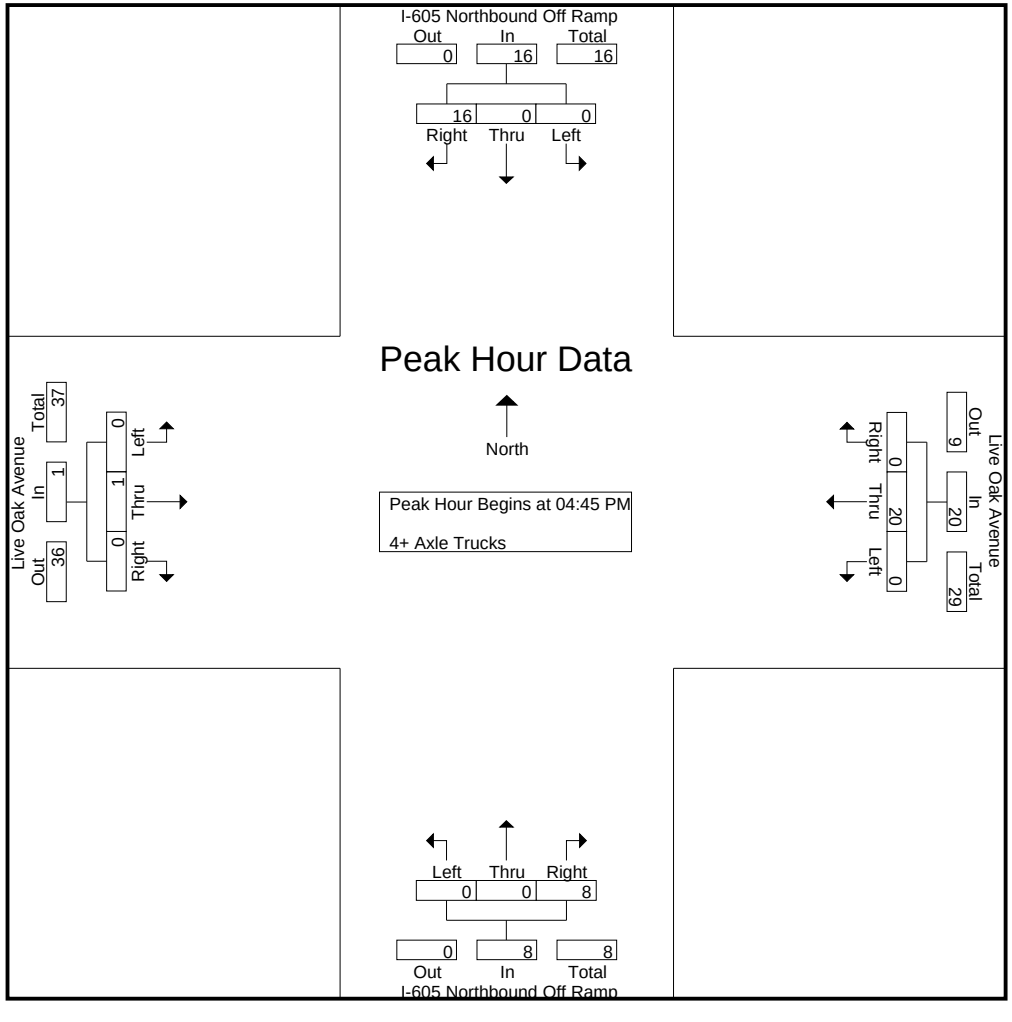

Counts Unlimited
PO Box 1178
Corona, CA 92878
(951) 268-6268

City of Irwindale
N/S: I-605 Northbound Off Ramps
E/W: Live Oak Avenue
Weather: Clear

File Name : 08_IRW_605N Lo PM
Site Code : 05117783
Start Date : 11/28/2017

	I-605 Northbound Off Ramp Southbound				Live Oak Avenue Westbound				I-605 Northbound Off Ramp Northbound				Live Oak Avenue Eastbound				
Start Time	Left	Thru	Right	App. Total	Left	Thru	Right	App. Total	Left	Thru	Right	App. Total	Left	Thru	Right	App. Total	Int. Total
Peak Hour Analysis From 04:45 PM to 05:30 PM - Peak 1 of 1																	
Peak Hour for Each Approach Begins at:																	
	04:45 PM				04:45 PM				04:45 PM				04:45 PM				
+0 mins.	0	0	4	4	0	**11**	0	**11**	0	0	**3**	**3**	0	**1**	0	**1**	
+15 mins.	0	0	4	4	0	5	0	5	0	0	1	1	0	0	0	0	
+30 mins.	0	0	3	3	0	1	0	1	0	0	1	1	0	0	0	0	
+45 mins.	0	0	**5**	**5**	0	3	0	3	0	0	3	3	0	0	0	0	
Total Volume	0	0	16	16	0	20	0	20	0	0	8	8	0	1	0	1	
% App. Total	0	0	100		0	100	0		0	0	100		0	100	0		
PHF	.000	.000	.800	.800	.000	.455	.000	.455	.000	.000	.667	.667	.000	.250	.000	.250	

Location: Irwindale
N/S: I-605 Northbound Off Ramps
E/W: Live Oak Avenue

Date: 11/28/2017
Day: Tuesday

PEDESTRIANS

	North Leg I-605 NB Off Ramp	East Leg Live Oak Avenue	South Leg I-605 NB Off Ramp	West Leg Live Oak Avenue	TOTAL
7:00 AM	0	0	0	0	0
7:15 AM	0	0	0	0	0
7:30 AM	0	0	0	0	0
7:45 AM	0	0	0	0	0
8:00 AM	0	0	0	0	0
8:15 AM	0	0	0	0	0
8:30 AM	0	0	0	0	0
8:45 AM	0	0	0	0	0
TOTAL VOLUMES:	0	0	0	0	0

	North Leg I-605 NB Off Ramp	East Leg Live Oak Avenue	South Leg I-605 NB Off Ramp	West Leg Live Oak Avenue	TOTAL
4:00 PM	0	0	0	0	0
4:15 PM	0	0	0	0	0
4:30 PM	0	0	0	0	0
4:45 PM	0	0	0	0	0
5:00 PM	0	0	0	0	0
5:15 PM	0	0	0	0	0
5:30 PM	0	0	0	0	0
5:45 PM	0	0	0	0	0
TOTAL VOLUMES:	0	0	0	0	0

Counts Unlimited
P.O. Box 1178
Corona, CA 92878
(951) 268-6268

Location: Irwindale
N/S: I-605 Northbound Off Ramps
E/W: Live Oak Avenue

Date: 11/28/2017
Day: Tuesday

BICYCLES

	North Leg I-605 NB Off Ramp	East Leg Live Oak Avenue	South Leg I-605 NB Off Ramp	West Leg Live Oak Avenue	TOTAL
7:00 AM	0	0	0	0	0
7:15 AM	1	0	0	0	1
7:30 AM	0	0	1	0	1
7:45 AM	0	0	1	0	1
8:00 AM	0	0	3	0	3
8:15 AM	0	0	0	0	0
8:30 AM	0	0	0	0	0
8:45 AM	0	0	0	0	0
TOTAL VOLUMES:	1	0	5	0	6

	North Leg I-605 NB Off Ramp	East Leg Live Oak Avenue	South Leg I-605 NB Off Ramp	West Leg Live Oak Avenue	TOTAL
4:00 PM	0	0	0	0	0
4:15 PM	0	0	0	0	0
4:30 PM	0	0	1	0	1
4:45 PM	0	0	0	0	0
5:00 PM	0	0	0	0	0
5:15 PM	0	0	0	0	0
5:30 PM	0	0	0	0	0
5:45 PM	0	0	0	0	0
TOTAL VOLUMES:	0	0	1	0	1

Counts Unlimited
P.O. Box 1178
Corona, CA 92878
(951) 268-6268

INTERSECTION TURNING MOVEMENT COUNTS

T218

PREPARED BY: AimTD LLC. tel: 714 253 7888 cs@aimtd.com

DATE: Tue, May 29, 18

LOCATION: Irwindale
NORTH & SOUTH: Graham
EAST & WEST: Live Oak

PROJECT #: SC1780
LOCATION #: 2
CONTROL: SIGNAL

NOTES:

AM / PM / MD / OTHER / OTHER — ▲ N, ◄ W, E ►, S ▼

		NORTHBOUND Graham			SOUTHBOUND Graham			EASTBOUND Live Oak			WESTBOUND Live Oak			
	LANES:	NL 0	NT X	NR 0	SL X	ST X	SR X	EL X	ET 2	ER 0	WL 1	WT 2	WR X	TOTAL
AM	7:00 AM	6	0	5	0	0	0	0	119	14	6	387	0	537
	7:15 AM	17	0	16	0	0	0	0	129	3	3	368	0	536
	7:30 AM	11	0	8	0	0	0	0	129	5	3	295	0	451
	7:45 AM	4	0	10	0	0	0	0	201	6	2	284	0	507
	8:00 AM	5	0	1	0	0	0	0	188	6	4	228	0	432
	8:15 AM	10	0	5	0	0	0	0	177	7	3	207	0	409
	8:30 AM	4	0	5	0	0	0	0	185	8	5	200	0	407
	8:45 AM	6	0	6	0	0	0	0	230	13	9	174	0	438
	VOLUMES	63	0	56	0	0	0	0	1,358	62	35	2,143	0	3,717
	APPROACH %	53%	0%	47%	0%	0%	0%	0%	96%	4%	2%	98%	0%	
	APP/DEPART	119	/	0	0	/	97	1,420	/	1,415	2,178	/	2,205	0
	BEGIN PEAK HR		7:00 AM											
	VOLUMES	38	0	39	0	0	0	0	578	28	14	1,334	0	2,031
	APPROACH %	49%	0%	51%	0%	0%	0%	0%	95%	5%	1%	99%	0%	
	PEAK HR FACTOR		0.583			0.000			0.732			0.858		0.946
	APP/DEPART	77	/	0	0	/	42	606	/	617	1,348	/	1,372	0
PM	4:00 PM	4	0	12	0	0	0	0	327	5	2	199	0	549
	4:15 PM	5	0	9	0	0	0	0	375	5	2	142	0	538
	4:30 PM	5	0	4	0	0	0	0	383	5	1	207	0	605
	4:45 PM	3	0	6	0	0	0	0	391	8	1	157	0	566
	5:00 PM	6	0	6	0	0	0	0	395	3	2	265	0	677
	5:15 PM	0	0	2	0	0	0	0	417	2	2	206	0	629
	5:30 PM	3	0	3	0	0	0	0	427	0	0	210	0	643
	5:45 PM	2	0	2	0	0	0	0	442	4	2	179	0	631
	VOLUMES	28	0	44	0	0	0	0	3,157	32	12	1,565	0	4,838
	APPROACH %	39%	0%	61%	0%	0%	0%	0%	99%	1%	1%	99%	0%	
	APP/DEPART	72	/	0	0	/	45	3,189	/	3,201	1,577	/	1,592	0
	BEGIN PEAK HR		5:00 PM											
	VOLUMES	11	0	13	0	0	0	0	1,681	9	6	860	0	2,580
	APPROACH %	46%	0%	54%	0%	0%	0%	0%	99%	1%	1%	99%	0%	
	PEAK HR FACTOR		0.500			0.000			0.947			0.811		0.953
	APP/DEPART	24	/	0	0	/	15	1,690	/	1,694	866	/	871	0

U-TURNS

	NB	SB	EB	WB	TTL
7:00 AM	0	0	0	0	0
7:15 AM	0	0	0	0	0
7:30 AM	0	0	0	0	0
7:45 AM	0	0	0	0	0
8:00 AM	0	0	0	0	0
8:15 AM	0	0	0	0	0
8:30 AM	1	0	0	0	1
8:45 AM	0	0	0	1	1
VOLUMES	1	0	0	1	2
4:00 PM	0	0	0	0	0
4:15 PM	1	0	0	0	1
4:30 PM	0	0	0	0	0
4:45 PM	0	0	0	0	0
5:00 PM	0	0	0	0	0
5:15 PM	0	0	0	0	0
5:30 PM	0	0	0	0	0
5:45 PM	0	0	0	0	0
VOLUMES	1	0	0	0	1

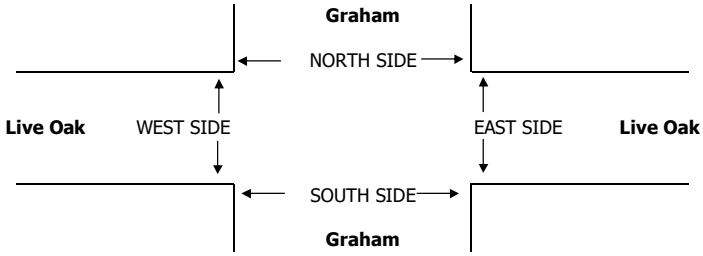

		PEDESTRIAN + BIKE CROSSINGS					PEDESTRIAN CROSSINGS					BICYCLE CROSSINGS				
		N SIDE	S SIDE	E SIDE	W SIDE	TOTAL	N SIDE	S SIDE	E SIDE	W SIDE	TOTAL	NS	SS	ES	WS	TOTAL
AM	7:00 AM	0	0	0	0	0	0	0	0	0	0	0	0	0	0	0
	7:15 AM	0	0	0	0	0	0	0	0	0	0	0	0	0	0	0
	7:30 AM	0	0	0	0	0	0	0	0	0	0	0	0	0	0	0
	7:45 AM	0	0	0	0	0	0	0	0	0	0	0	0	0	0	0
	8:00 AM	0	0	0	0	0	0	0	0	0	0	0	0	0	0	0
	8:15 AM	0	0	0	0	0	0	0	0	0	0	0	0	0	0	0
	8:30 AM	0	0	0	0	0	0	0	0	0	0	0	0	0	0	0
	8:45 AM	0	0	0	0	0	0	0	0	0	0	0	0	0	0	0
	TOTAL	0	0	0	0	0	0	0	0	0	0	0	0	0	0	0
	AM BEGIN PEAK HR	7:00 AM					0	0	0	0	0					
PM	4:00 PM	0	0	0	0	0	0	0	0	0	0	0	0	0	0	0
	4:15 PM	0	0	0	0	0	0	0	0	0	0	0	0	0	0	0
	4:30 PM	0	0	0	0	0	0	0	0	0	0	0	0	0	0	0
	4:45 PM	0	0	0	0	0	0	0	0	0	0	0	0	0	0	0
	5:00 PM	0	0	0	0	0	0	0	0	0	0	0	0	0	0	0
	5:15 PM	0	0	0	0	0	0	0	0	0	0	0	0	0	0	0
	5:30 PM	0	0	0	0	0	0	0	0	0	0	0	0	0	0	0
	5:45 PM	0	0	0	0	0	0	0	0	0	0	0	0	0	0	0
	TOTAL	0	0	0	0	0	0	0	0	0	0	0	0	0	0	0
	PM BEGIN PEAK HR	5:00 PM					0	0	0	0	0					

AimTD LLC

TURNING MOVEMENT COUNTS

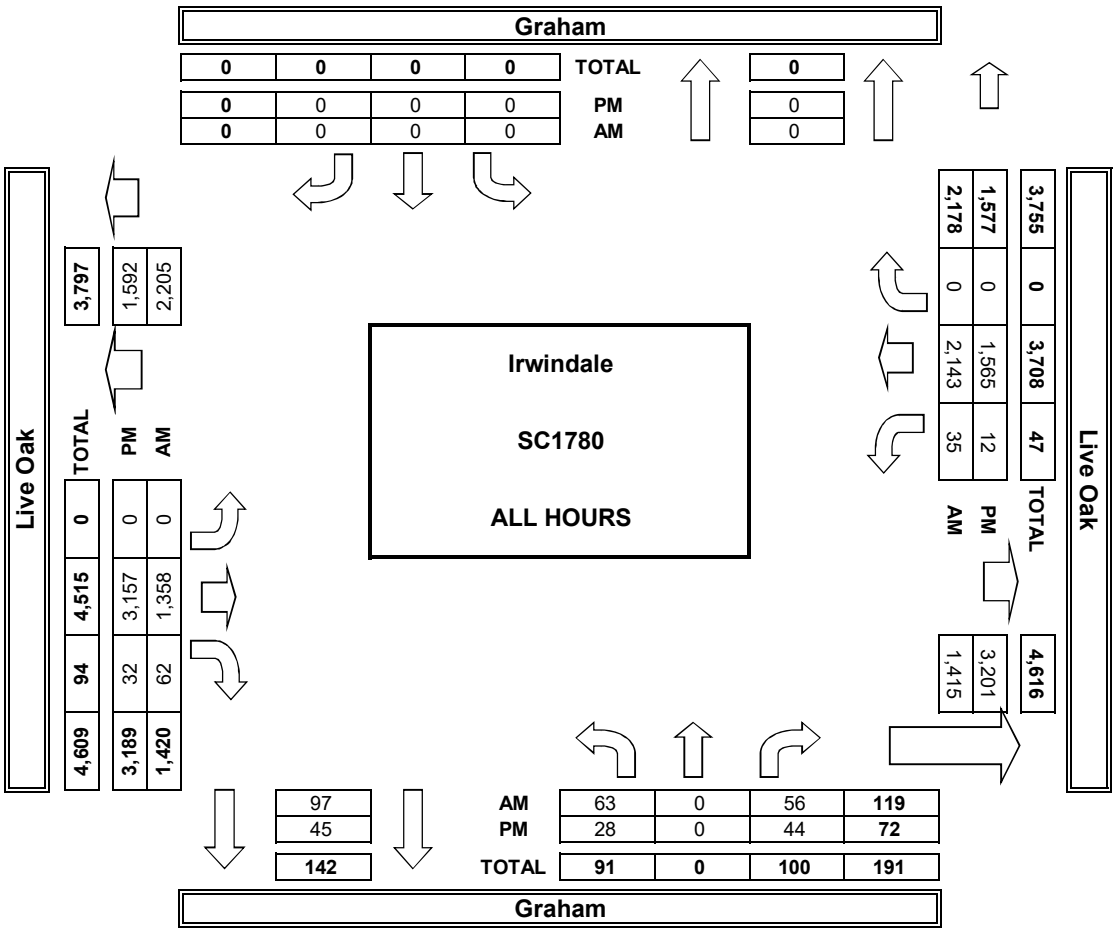

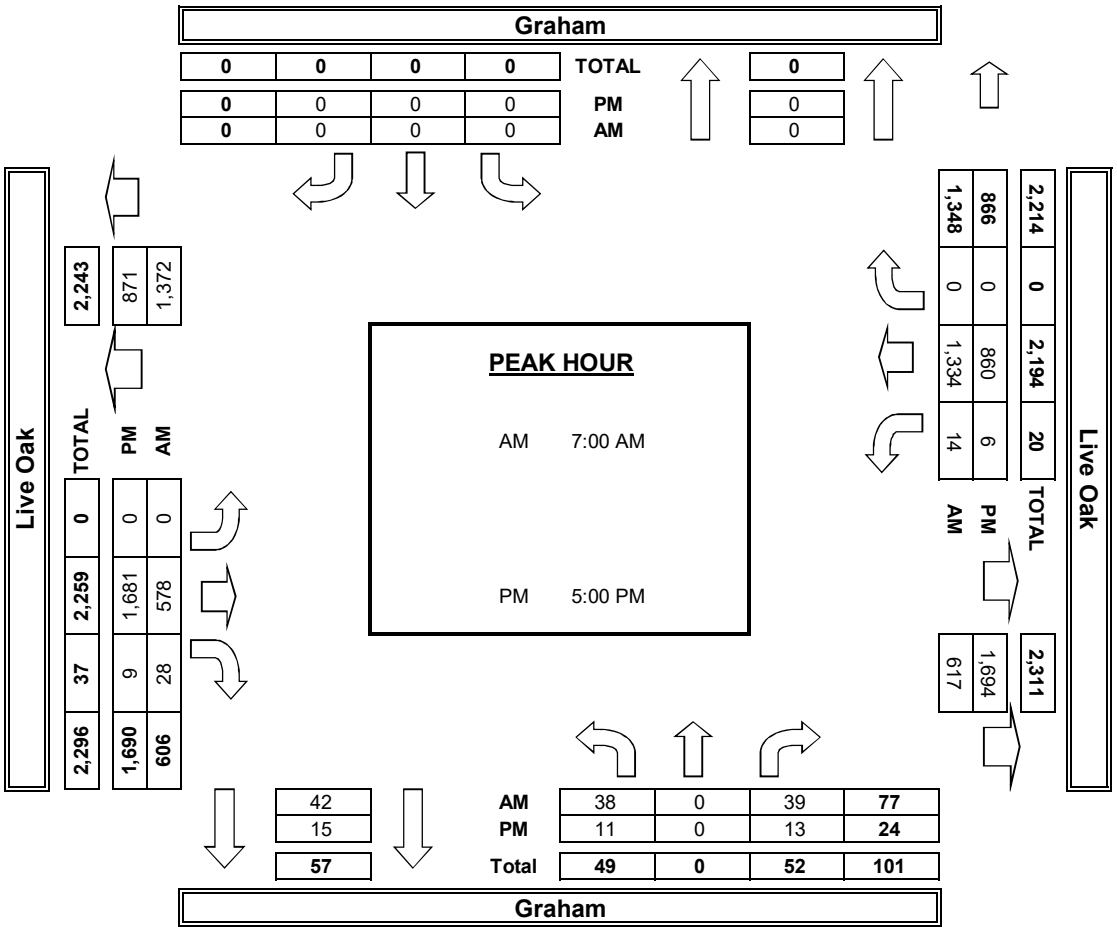

Counts Unlimited
PO Box 1178
Corona, CA 92878
(951) 268-6268

City of Irwindale
N/S: Rivergrade Road
E/W: Live Oak Avenue
Weather: Clear

File Name : 09_IRW_Riv Lo AM
Site Code : 05117783
Start Date : 11/28/2017
Page No : 1

Groups Printed- Passenger Vehicles - Large 2 Axle Vehicles - 3 Axle Vehicles - 4+ Axle Trucks

	Rivergrade Road Southbound					Live Oak Avenue Westbound					Rivergrade Road Northbound					Live Oak Avenue Eastbound							
Start Time	Left	Thru	Right	RTOR	App. Total	Left	Thru	Right	RTOR	App. Total	Left	Thru	Right	RTOR	App. Total	Left	Thru	Right	RTOR	App. Total	Exclu. Total	Inclu. Total	Int. Total
07:00 AM	5	31	6	4	42	63	280	4	2	347	15	5	24	17	44	18	112	16	0	146	23	579	602
07:15 AM	5	52	12	2	69	56	269	6	3	331	11	17	26	7	54	21	122	4	0	147	12	601	613
07:30 AM	8	73	16	6	97	70	249	9	2	328	14	17	39	23	70	16	143	18	1	177	32	672	704
07:45 AM	8	103	18	11	129	71	246	6	0	323	15	20	42	27	77	18	175	28	0	221	38	750	788
Total	26	259	52	23	337	260	1044	25	7	1329	55	59	131	74	245	73	552	66	1	691	105	2602	2707
08:00 AM	3	83	12	9	98	71	219	1	0	291	12	13	31	23	56	16	147	27	6	190	38	635	673
08:15 AM	4	43	6	3	53	61	211	2	0	274	11	9	43	31	63	21	151	30	4	202	38	592	630
08:30 AM	3	35	4	3	42	76	187	2	0	265	11	10	37	21	58	12	125	22	2	159	26	524	550
08:45 AM	5	33	9	6	47	44	178	3	0	225	11	15	30	19	56	20	150	34	3	204	28	532	560
Total	15	194	31	21	240	252	795	8	0	1055	45	47	141	94	233	69	573	113	15	755	130	2283	2413
Grand Total	41	453	83	44	577	512	1839	33	7	2384	100	106	272	168	478	142	1125	179	16	1446	235	4885	5120
Apprch %	7.1	78.5	14.4			21.5	77.1	1.4			20.9	22.2	56.9			9.8	77.8	12.4					
Total %	0.8	9.3	1.7		11.8	10.5	37.6	0.7		48.8	2	2.2	5.6		9.8	2.9	23	3.7		29.6	4.6	95.4	
Passenger Vehicles	36	420	34		510	494	1636	25		2161	85	78	195		475	83	986	172		1257	0	0	4403
% Passenger Vehicles	87.8	92.7	41	45.5	82.1	96.5	89	75.8	85.7	90.4	85	73.6	71.7	69.6	73.5	58.5	87.6	96.1	100	86	0	0	86
Large 2 Axle Vehicles	3	7	16		37	8	115	3		126	4	6	9		26	29	65	4		98	0	0	287
% Large 2 Axle Vehicles	7.3	1.5	19.3	25	6	1.6	6.3	9.1	0	5.3	4	5.7	3.3	4.2	4	20.4	5.8	2.2	0	6.7	0	0	5.6
3 Axle Vehicles	0	5	14		28	2	24	0		26	7	6	9		26	7	21	1		29	0	0	109
% 3 Axle Vehicles	0	1.1	16.9	20.5	4.5	0.4	1.3	0	0	1.1	7	5.7	3.3	2.4	4	4.9	1.9	0.6	0	2	0	0	2.1
4+ Axle Trucks	2	21	19		46	8	64	5		78	4	16	59		119	23	53	2		78	0	0	321
% 4+ Axle Trucks	4.9	4.6	22.9	9.1	7.4	1.6	3.5	15.2	14.3	3.3	4	15.1	21.7	23.8	18.4	16.2	4.7	1.1	0	5.3	0	0	6.3

	Rivergrade Road Southbound				Live Oak Avenue Westbound				Rivergrade Road Northbound				Live Oak Avenue Eastbound				
Start Time	Left	Thru	Right	App. Total	Left	Thru	Right	App. Total	Left	Thru	Right	App. Total	Left	Thru	Right	App. Total	Int. Total
Peak Hour Analysis From 07:00 AM to 08:45 AM - Peak 1 of 1																	
Peak Hour for Entire Intersection Begins at 07:15 AM																	
07:15 AM	5	52	12	69	56	**269**	6	**331**	11	17	26	54	**21**	122	4	147	601
07:30 AM	**8**	73	16	97	70	249	**9**	328	14	17	39	70	16	143	18	177	672
07:45 AM	8	**103**	**18**	**129**	**71**	246	6	323	**15**	**20**	**42**	**77**	18	**175**	**28**	**221**	**750**
08:00 AM	3	83	12	98	71	219	1	291	12	13	31	56	16	147	27	190	635
Total Volume	24	311	58	393	268	983	22	1273	52	67	138	257	71	587	77	735	2658
% App. Total	6.1	79.1	14.8		21.1	77.2	1.7		20.2	26.1	53.7		9.7	79.9	10.5		
PHF	.750	.755	.806	.762	.944	.914	.611	.961	.867	.838	.821	.834	.845	.839	.688	.831	.886

Counts Unlimited
PO Box 1178
Corona, CA 92878
(951) 268-6268

City of Irwindale
N/S: Rivergrade Road
E/W: Live Oak Avenue
Weather: Clear

File Name : 09_IRW_Riv Lo AM
Site Code : 05117783
Start Date : 11/28/2017
Page No : 2

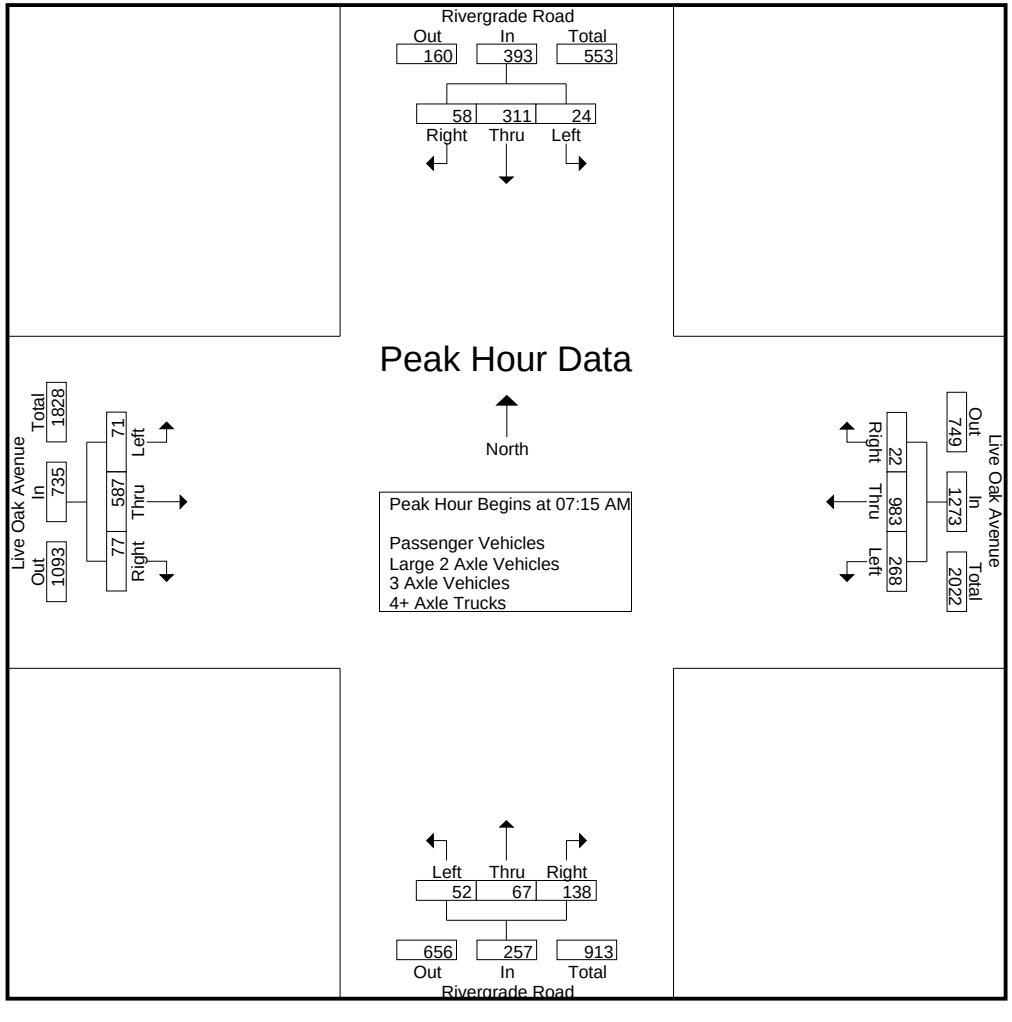

Counts Unlimited
PO Box 1178
Corona, CA 92878
(951) 268-6268

City of Irwindale
N/S: Rivergrade Road
E/W: Live Oak Avenue
Weather: Clear

File Name : 09_IRW_Riv Lo AM
Site Code : 05117783
Start Date : 11/28/2017
Page No : 3

	Rivergrade Road Southbound				Live Oak Avenue Westbound				Rivergrade Road Northbound				Live Oak Avenue Eastbound				
Start Time	Left	Thru	Right	App. Total	Left	Thru	Right	App. Total	Left	Thru	Right	App. Total	Left	Thru	Right	App. Total	Int. Total
Peak Hour Analysis From 07:00 AM to 08:45 AM - Peak 1 of 1																	
Peak Hour for Each Approach Begins at:																	
	07:15 AM				07:00 AM				07:30 AM				07:30 AM				
+0 mins.	5	52	12	69	63	**280**	4	**347**	14	17	39	70	16	143	18	177	
+15 mins.	**8**	73	16	97	56	269	6	331	**15**	**20**	42	**77**	18	**175**	28	**221**	
+30 mins.	8	**103**	**18**	**129**	70	249	**9**	328	12	13	31	56	16	147	27	190	
+45 mins.	3	83	12	98	**71**	246	6	323	11	9	**43**	63	**21**	151	**30**	202	
Total Volume	24	311	58	393	260	1044	25	1329	52	59	155	266	71	616	103	790	
% App. Total	6.1	79.1	14.8		19.6	78.6	1.9		19.5	22.2	58.3		9	78	13		
PHF	.750	.755	.806	.762	.915	.932	.694	.957	.867	.738	.901	.864	.845	.880	.858	.894	

Counts Unlimited
PO Box 1178
Corona, CA 92878
(951) 268-6268

City of Irwindale
N/S: Rivergrade Road
E/W: Live Oak Avenue
Weather: Clear

File Name : 09_IRW_Riv Lo AM
Site Code : 05117783
Start Date : 11/28/2017
Page No : 1

Groups Printed- Passenger Vehicles

	Rivergrade Road Southbound					Live Oak Avenue Westbound					Rivergrade Road Northbound					Live Oak Avenue Eastbound							
Start Time	Left	Thru	Right	RTOR	App. Total	Left	Thru	Right	RTOR	App. Total	Left	Thru	Right	RTOR	App. Total	Left	Thru	Right	RTOR	App. Total	Exclu. Total	Inclu. Total	Int. Total
07:00 AM	5	30	4	3	39	61	266	2	1	329	15	4	16	11	35	11	98	16	0	125	15	528	543
07:15 AM	4	44	5	0	53	54	245	5	3	304	8	13	18	4	39	16	105	4	0	125	7	521	528
07:30 AM	8	67	8	4	83	69	222	8	2	299	12	14	28	14	54	9	129	18	1	156	21	592	613
07:45 AM	8	99	8	6	115	68	221	6	0	295	14	13	34	24	61	12	158	27	0	197	30	668	698
Total	25	240	25	13	290	252	954	21	6	1227	49	44	96	53	189	48	490	65	1	603	73	2309	2382
08:00 AM	3	77	5	4	85	70	198	0	0	268	12	11	26	18	49	9	124	26	6	159	28	561	589
08:15 AM	2	41	2	1	45	59	179	1	0	239	9	7	28	19	44	9	128	29	4	166	24	494	518
08:30 AM	3	32	0	0	35	71	156	1	0	228	8	6	26	14	40	6	112	21	2	139	16	442	458
08:45 AM	3	30	2	2	35	42	149	2	0	193	7	10	19	13	36	11	132	31	3	174	18	438	456
Total	11	180	9	7	200	242	682	4	0	928	36	34	99	64	169	35	496	107	15	638	86	1935	2021
Grand Total	36	420	34	20	490	494	1636	25	6	2155	85	78	195	117	358	83	986	172	16	1241	159	4244	4403
Apprch %	7.3	85.7	6.9			22.9	75.9	1.2			23.7	21.8	54.5			6.7	79.5	13.9					
Total %	0.8	9.9	0.8		11.5	11.6	38.5	0.6		50.8	2	1.8	4.6		8.4	2	23.2	4.1		29.2	3.6	96.4	

	Rivergrade Road Southbound				Live Oak Avenue Westbound				Rivergrade Road Northbound				Live Oak Avenue Eastbound				
Start Time	Left	Thru	Right	App. Total	Left	Thru	Right	App. Total	Left	Thru	Right	App. Total	Left	Thru	Right	App. Total	Int. Total
Peak Hour Analysis From 07:15 AM to 08:00 AM - Peak 1 of 1																	
Peak Hour for Entire Intersection Begins at 07:15 AM																	
07:15 AM	4	44	5	53	54	**245**	5	**304**	8	13	18	39	**16**	105	4	125	521
07:30 AM	**8**	67	**8**	83	69	222	**8**	299	12	**14**	28	54	9	129	18	156	592
07:45 AM	8	**99**	8	**115**	68	221	6	295	**14**	13	**34**	**61**	12	**158**	**27**	**197**	**668**
08:00 AM	3	77	5	85	**70**	198	0	268	12	11	26	49	9	124	26	159	561
Total Volume	23	287	26	336	261	886	19	1166	46	51	106	203	46	516	75	637	2342
% App. Total	6.8	85.4	7.7		22.4	76	1.6		22.7	25.1	52.2		7.2	81	11.8		
PHF	.719	.725	.813	.730	.932	.904	.594	.959	.821	.911	.779	.832	.719	.816	.694	.808	.876

Counts Unlimited
PO Box 1178
Corona, CA 92878
(951) 268-6268

City of Irwindale
N/S: Rivergrade Road
E/W: Live Oak Avenue
Weather: Clear

File Name : 09_IRW_Riv Lo AM
Site Code : 05117783
Start Date : 11/28/2017
Page No : 2

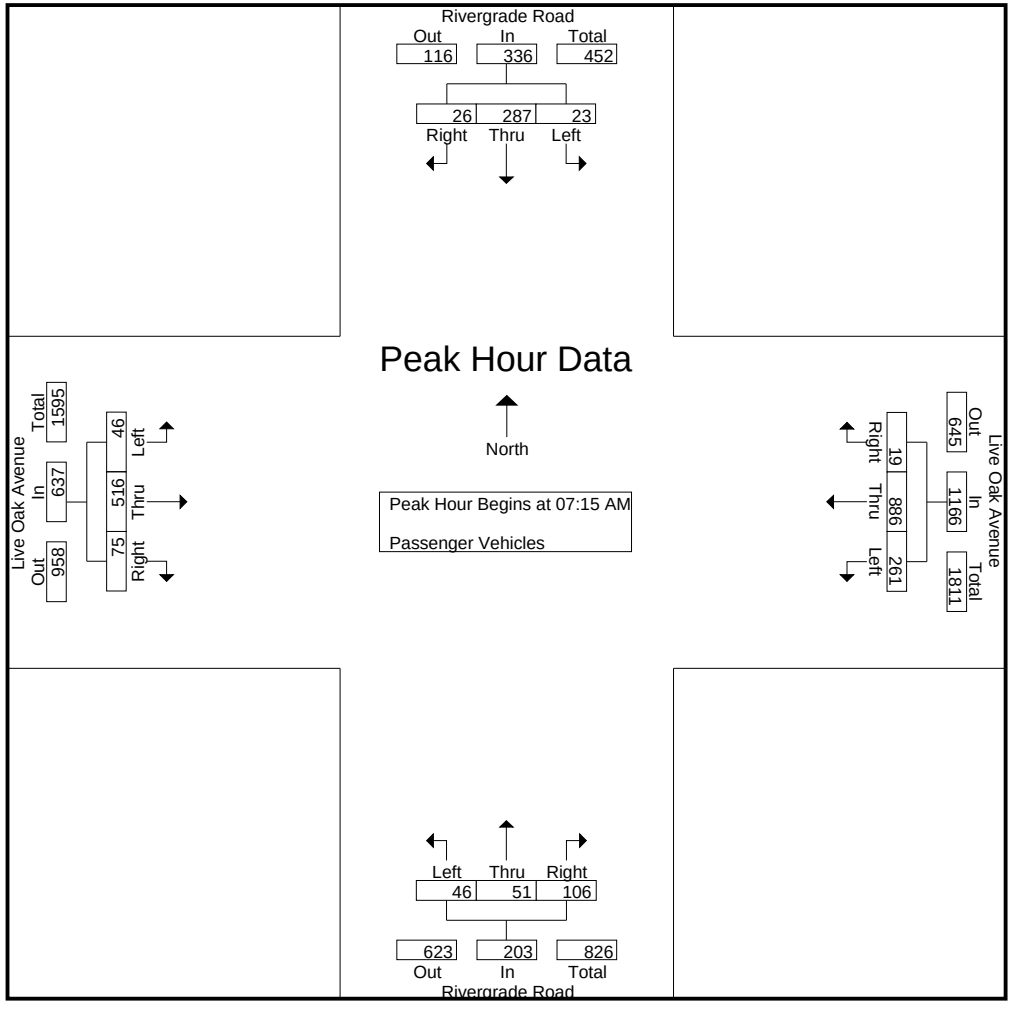

Counts Unlimited
PO Box 1178
Corona, CA 92878
(951) 268-6268

City of Irwindale
N/S: Rivergrade Road
E/W: Live Oak Avenue
Weather: Clear

File Name : 09_IRW_Riv Lo AM
Site Code : 05117783
Start Date : 11/28/2017
Page No : 3

	Rivergrade Road Southbound				Live Oak Avenue Westbound				Rivergrade Road Northbound				Live Oak Avenue Eastbound				
Start Time	Left	Thru	Right	App. Total	Left	Thru	Right	App. Total	Left	Thru	Right	App. Total	Left	Thru	Right	App. Total	Int. Total
Peak Hour Analysis From 07:15 AM to 08:00 AM - Peak 1 of 1																	
Peak Hour for Each Approach Begins at:																	
	07:15 AM				07:15 AM				07:15 AM				07:15 AM				
+0 mins.	4	44	5	53	54	**245**	5	**304**	8	13	18	39	**16**	105	4	125	
+15 mins.	**8**	67	**8**	83	69	222	**8**	299	12	**14**	28	54	9	129	18	156	
+30 mins.	8	**99**	8	**115**	68	221	6	295	**14**	13	**34**	**61**	12	**158**	**27**	**197**	
+45 mins.	3	77	5	85	**70**	198	0	268	12	11	26	49	9	124	26	159	
Total Volume	23	287	26	336	261	886	19	1166	46	51	106	203	46	516	75	637	
% App. Total	6.8	85.4	7.7		22.4	76	1.6		22.7	25.1	52.2		7.2	81	11.8		
PHF	.719	.725	.813	.730	.932	.904	.594	.959	.821	.911	.779	.832	.719	.816	.694	.808	

Counts Unlimited
PO Box 1178
Corona, CA 92878
(951) 268-6268

City of Irwindale
N/S: Rivergrade Road
E/W: Live Oak Avenue
Weather: Clear

File Name : 09_IRW_Riv Lo AM
Site Code : 05117783
Start Date : 11/28/2017
Page No : 1

Groups Printed- Large 2 Axle Vehicles

	Rivergrade Road Southbound					Live Oak Avenue Westbound					Rivergrade Road Northbound					Live Oak Avenue Eastbound							
Start Time	Left	Thru	Right	RTOR	App. Total	Left	Thru	Right	RTOR	App. Total	Left	Thru	Right	RTOR	App. Total	Left	Thru	Right	RTOR	App. Total	Exclu. Total	Inclu. Total	Int. Total
07:00 AM	0	0	0	0	0	1	10	1	0	12	0	0	1	1	1	3	6	0	0	9	1	22	23
07:15 AM	1	0	3	1	4	1	14	0	0	15	0	0	1	0	1	5	8	0	0	13	1	33	34
07:30 AM	0	2	2	1	4	0	24	0	0	24	1	0	1	1	2	4	6	0	0	10	2	40	42
07:45 AM	0	1	3	2	4	1	16	0	0	17	0	2	0	0	2	4	8	0	0	12	2	35	37
Total	1	3	8	4	12	3	64	1	0	68	1	2	3	2	6	16	28	0	0	44	6	130	136
08:00 AM	0	1	2	2	3	0	9	0	0	9	0	1	0	0	1	4	11	0	0	15	2	28	30
08:15 AM	1	1	1	0	3	2	15	1	0	18	1	0	3	3	4	6	13	0	0	19	3	44	47
08:30 AM	0	2	1	1	3	1	11	1	0	13	0	2	1	1	3	2	3	1	0	6	2	25	27
08:45 AM	1	0	4	4	5	2	16	0	0	18	2	1	2	1	5	1	10	3	0	14	5	42	47
Total	2	4	8	7	14	5	51	2	0	58	3	4	6	5	13	13	37	4	0	54	12	139	151
Grand Total	3	7	16	11	26	8	115	3	0	126	4	6	9	7	19	29	65	4	0	98	18	269	287
Apprch %	11.5	26.9	61.5			6.3	91.3	2.4			21.1	31.6	47.4			29.6	66.3	4.1					
Total %	1.1	2.6	5.9		9.7	3	42.8	1.1		46.8	1.5	2.2	3.3		7.1	10.8	24.2	1.5		36.4	6.3	93.7	

	Rivergrade Road Southbound				Live Oak Avenue Westbound				Rivergrade Road Northbound				Live Oak Avenue Eastbound				
Start Time	Left	Thru	Right	App. Total	Left	Thru	Right	App. Total	Left	Thru	Right	App. Total	Left	Thru	Right	App. Total	Int. Total
Peak Hour Analysis From 07:15 AM to 08:00 AM - Peak 1 of 1																	
Peak Hour for Entire Intersection Begins at 07:15 AM																	
07:15 AM	**1**	0	**3**	**4**	**1**	14	0	15	0	0	**1**	1	**5**	8	0	13	33
07:30 AM	0	**2**	2	4	0	**24**	0	**24**	**1**	0	1	**2**	4	6	0	10	**40**
07:45 AM	0	1	3	4	1	16	0	17	0	**2**	0	2	4	8	0	12	35
08:00 AM	0	1	2	3	0	9	0	9	0	1	0	1	4	**11**	0	**15**	28
Total Volume	1	4	10	15	2	63	0	65	1	3	2	6	17	33	0	50	136
% App. Total	6.7	26.7	66.7		3.1	96.9	0		16.7	50	33.3		34	66	0		
PHF	.250	.500	.833	.938	.500	.656	.000	.677	.250	.375	.500	.750	.850	.750	.000	.833	.850

Counts Unlimited
PO Box 1178
Corona, CA 92878
(951) 268-6268

City of Irwindale
N/S: Rivergrade Road
E/W: Live Oak Avenue
Weather: Clear

File Name : 09_IRW_Riv Lo AM
Site Code : 05117783
Start Date : 11/28/2017
Page No : 2

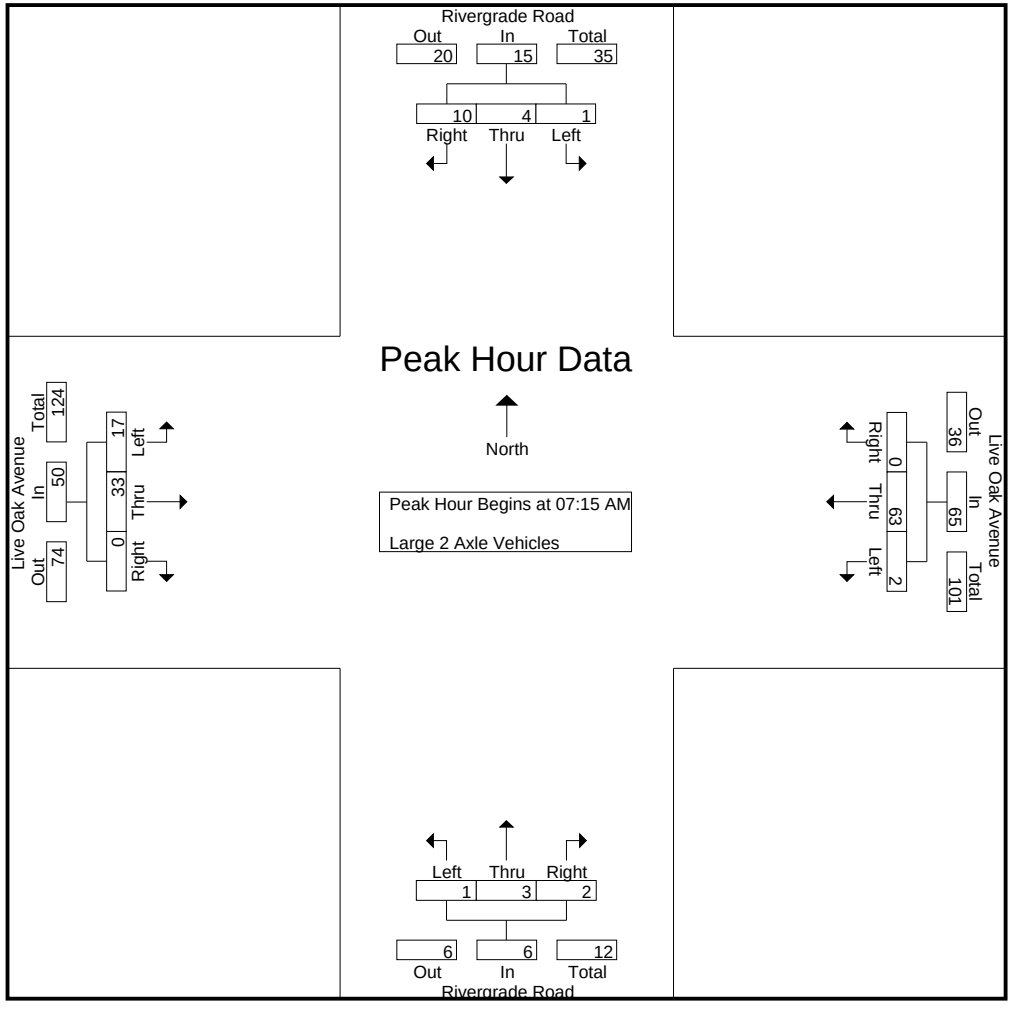

Counts Unlimited
PO Box 1178
Corona, CA 92878
(951) 268-6268

City of Irwindale
N/S: Rivergrade Road
E/W: Live Oak Avenue
Weather: Clear

File Name : 09_IRW_Riv Lo AM
Site Code : 05117783
Start Date : 11/28/2017
Page No : 3

	Rivergrade Road Southbound				Live Oak Avenue Westbound				Rivergrade Road Northbound				Live Oak Avenue Eastbound				
Start Time	Left	Thru	Right	App. Total	Left	Thru	Right	App. Total	Left	Thru	Right	App. Total	Left	Thru	Right	App. Total	Int. Total
Peak Hour Analysis From 07:15 AM to 08:00 AM - Peak 1 of 1																	
Peak Hour for Each Approach Begins at:																	
	07:15 AM				07:15 AM				07:15 AM				07:15 AM				
+0 mins.	**1**	0	**3**	**4**	**1**	14	0	15	0	0	**1**	1	**5**	8	0	13	
+15 mins.	0	**2**	2	4	0	**24**	0	**24**	**1**	0	1	**2**	4	6	0	10	
+30 mins.	0	1	3	4	1	16	0	17	0	**2**	0	2	4	8	0	12	
+45 mins.	0	1	2	3	0	9	0	9	0	1	0	1	4	**11**	0	**15**	
Total Volume	1	4	10	15	2	63	0	65	1	3	2	6	17	33	0	50	
% App. Total	6.7	26.7	66.7		3.1	96.9	0		16.7	50	33.3		34	66	0		
PHF	.250	.500	.833	.938	.500	.656	.000	.677	.250	.375	.500	.750	.850	.750	.000	.833	

Counts Unlimited
PO Box 1178
Corona, CA 92878
(951) 268-6268

City of Irwindale
N/S: Rivergrade Road
E/W: Live Oak Avenue
Weather: Clear

File Name : 09_IRW_Riv Lo AM
Site Code : 05117783
Start Date : 11/28/2017
Page No : 1

Groups Printed- 3 Axle Vehicles

	Rivergrade Road Southbound					Live Oak Avenue Westbound					Rivergrade Road Northbound					Live Oak Avenue Eastbound							
Start Time	Left	Thru	Right	RTOR	App. Total	Left	Thru	Right	RTOR	App. Total	Left	Thru	Right	RTOR	App. Total	Left	Thru	Right	RTOR	App. Total	Exclu. Total	Inclu. Total	Int. Total
07:00 AM	0	0	2	1	2	0	1	0	0	1	0	0	0	0	0	1	1	0	0	2	1	5	6
07:15 AM	0	1	1	1	2	0	2	0	0	2	2	4	1	1	7	0	1	0	0	1	2	12	14
07:30 AM	0	1	3	1	4	1	0	0	0	1	1	0	1	0	2	1	4	0	0	5	1	12	13
07:45 AM	0	1	4	2	5	1	3	0	0	4	0	0	0	0	0	0	1	0	0	1	2	10	12
Total	0	3	10	5	13	2	6	0	0	8	3	4	2	1	9	2	7	0	0	9	6	39	45
08:00 AM	0	0	0	0	0	0	2	0	0	2	0	0	0	0	0	2	1	0	0	3	0	5	5
08:15 AM	0	0	2	2	2	0	8	0	0	8	1	1	2	1	4	1	5	1	0	7	3	21	24
08:30 AM	0	1	2	2	3	0	3	0	0	3	2	0	4	2	6	1	5	0	0	6	4	18	22
08:45 AM	0	1	0	0	1	0	5	0	0	5	1	1	1	0	3	1	3	0	0	4	0	13	13
Total	0	2	4	4	6	0	18	0	0	18	4	2	7	3	13	5	14	1	0	20	7	57	64
Grand Total	0	5	14	9	19	2	24	0	0	26	7	6	9	4	22	7	21	1	0	29	13	96	109
Apprch %	0	26.3	73.7			7.7	92.3	0			31.8	27.3	40.9			24.1	72.4	3.4					
Total %	0	5.2	14.6		19.8	2.1	25	0		27.1	7.3	6.2	9.4		22.9	7.3	21.9	1		30.2	11.9	88.1	

	Rivergrade Road Southbound				Live Oak Avenue Westbound				Rivergrade Road Northbound				Live Oak Avenue Eastbound				
Start Time	Left	Thru	Right	App. Total	Left	Thru	Right	App. Total	Left	Thru	Right	App. Total	Left	Thru	Right	App. Total	Int. Total
Peak Hour Analysis From 07:15 AM to 08:00 AM - Peak 1 of 1																	
Peak Hour for Entire Intersection Begins at 07:15 AM																	
07:15 AM	0	**1**	1	2	0	2	0	2	**2**	**4**	**1**	**7**	0	1	0	1	**12**
07:30 AM	0	1	3	4	**1**	0	0	1	1	0	1	2	1	**4**	0	**5**	12
07:45 AM	0	1	**4**	**5**	1	**3**	0	**4**	0	0	0	0	0	1	0	1	10
08:00 AM	0	0	0	0	0	2	0	2	0	0	0	0	**2**	1	0	3	5
Total Volume	0	3	8	11	2	7	0	9	3	4	2	9	3	7	0	10	39
% App. Total	0	27.3	72.7		22.2	77.8	0		33.3	44.4	22.2		30	70	0		
PHF	.000	.750	.500	.550	.500	.583	.000	.563	.375	.250	.500	.321	.375	.438	.000	.500	.813

Counts Unlimited
PO Box 1178
Corona, CA 92878
(951) 268-6268

City of Irwindale
N/S: Rivergrade Road
E/W: Live Oak Avenue
Weather: Clear

File Name : 09_IRW_Riv Lo AM
Site Code : 05117783
Start Date : 11/28/2017
Page No : 2

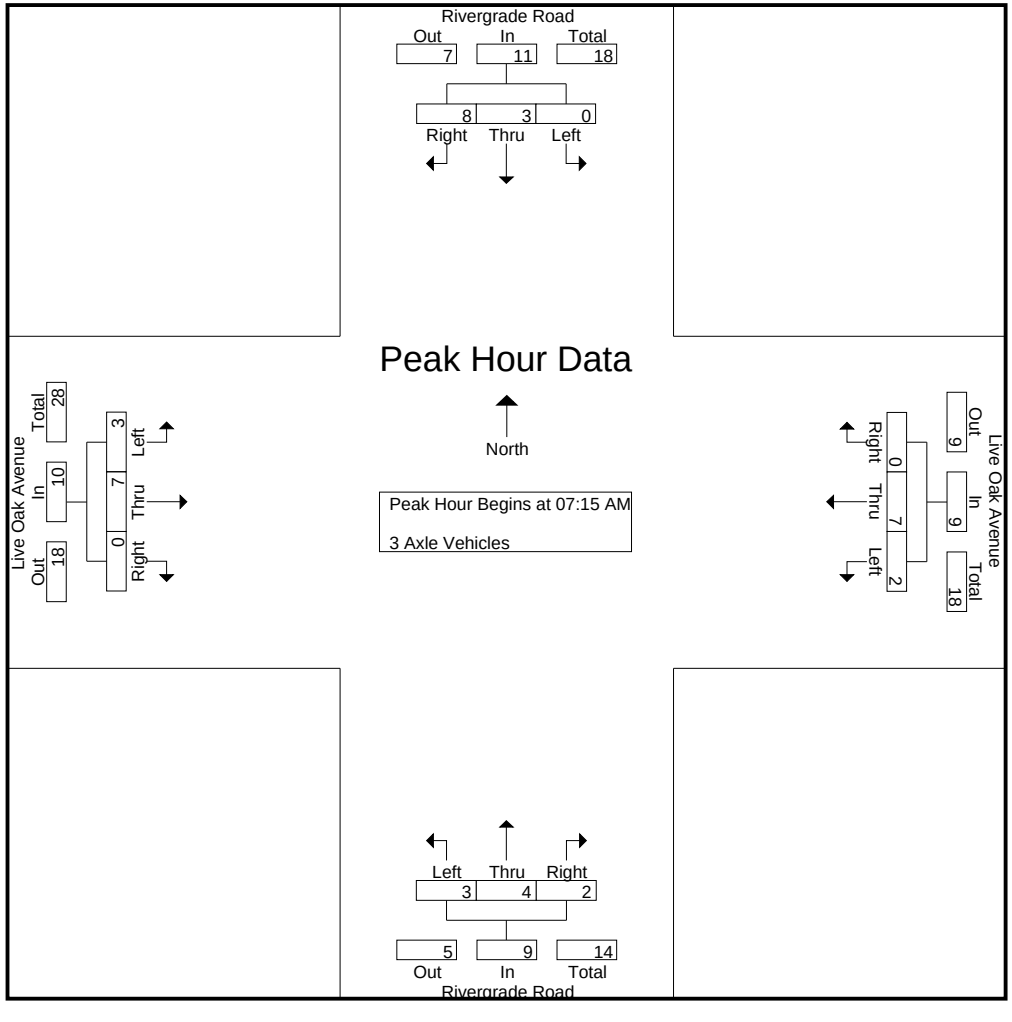

Counts Unlimited
PO Box 1178
Corona, CA 92878
(951) 268-6268

City of Irwindale
N/S: Rivergrade Road
E/W: Live Oak Avenue
Weather: Clear

File Name : 09_IRW_Riv Lo AM
Site Code : 05117783
Start Date : 11/28/2017
Page No : 3

	Rivergrade Road Southbound				Live Oak Avenue Westbound				Rivergrade Road Northbound				Live Oak Avenue Eastbound				
Start Time	Left	Thru	Right	App. Total	Left	Thru	Right	App. Total	Left	Thru	Right	App. Total	Left	Thru	Right	App. Total	Int. Total
Peak Hour Analysis From 07:15 AM to 08:00 AM - Peak 1 of 1																	
Peak Hour for Each Approach Begins at:																	
	07:15 AM				07:15 AM				07:15 AM				07:15 AM				
+0 mins.	0	**1**	1	2	0	2	0	2	**2**	**4**	**1**	**7**	0	1	0	1	
+15 mins.	0	1	3	4	**1**	0	0	1	1	0	1	2	1	**4**	0	**5**	
+30 mins.	0	1	**4**	**5**	1	**3**	0	**4**	0	0	0	0	0	1	0	1	
+45 mins.	0	0	0	0	0	2	0	2	0	0	0	0	**2**	1	0	3	
Total Volume	0	3	8	11	2	7	0	9	3	4	2	9	3	7	0	10	
% App. Total	0	27.3	72.7		22.2	77.8	0		33.3	44.4	22.2		30	70	0		
PHF	.000	.750	.500	.550	.500	.583	.000	.563	.375	.250	.500	.321	.375	.438	.000	.500	

Counts Unlimited
PO Box 1178
Corona, CA 92878
(951) 268-6268

City of Irwindale
N/S: Rivergrade Road
E/W: Live Oak Avenue
Weather: Clear

File Name : 09_IRW_Riv Lo AM
Site Code : 05117783
Start Date : 11/28/2017
Page No : 1

Groups Printed- 4+ Axle Trucks

	Rivergrade Road Southbound					Live Oak Avenue Westbound					Rivergrade Road Northbound					Live Oak Avenue Eastbound							
Start Time	Left	Thru	Right	RTOR	App. Total	Left	Thru	Right	RTOR	App. Total	Left	Thru	Right	RTOR	App. Total	Left	Thru	Right	RTOR	App. Total	Exclu. Total	Inclu. Total	Int. Total
07:00 AM	0	1	0	0	1	1	3	1	1	5	0	1	7	5	8	3	7	0	0	10	6	24	30
07:15 AM	0	7	3	0	10	1	8	1	0	10	1	0	6	2	7	0	8	0	0	8	2	35	37
07:30 AM	0	3	3	0	6	0	3	1	0	4	0	3	9	8	12	2	4	0	0	6	8	28	36
07:45 AM	0	2	3	1	5	1	6	0	0	7	1	5	8	3	14	2	8	1	0	11	4	37	41
Total	0	13	9	1	22	3	20	3	1	26	2	9	30	18	41	7	27	1	0	35	20	124	144
08:00 AM	0	5	5	3	10	1	10	1	0	12	0	1	5	5	6	1	11	1	0	13	8	41	49
08:15 AM	1	1	1	0	3	0	9	0	0	9	0	1	10	8	11	5	5	0	0	10	8	33	41
08:30 AM	0	0	1	0	1	4	17	0	0	21	1	2	6	4	9	3	5	0	0	8	4	39	43
08:45 AM	1	2	3	0	6	0	8	1	0	9	1	3	8	5	12	7	5	0	0	12	5	39	44
Total	2	8	10	3	20	5	44	2	0	51	2	7	29	22	38	16	26	1	0	43	25	152	177
Grand Total	2	21	19	4	42	8	64	5	1	77	4	16	59	40	79	23	53	2	0	78	45	276	321
Apprch %	4.8	50	45.2			10.4	83.1	6.5			5.1	20.3	74.7			29.5	67.9	2.6					
Total %	0.7	7.6	6.9		15.2	2.9	23.2	1.8		27.9	1.4	5.8	21.4		28.6	8.3	19.2	0.7		28.3	14	86	

	Rivergrade Road Southbound				Live Oak Avenue Westbound				Rivergrade Road Northbound				Live Oak Avenue Eastbound				
Start Time	Left	Thru	Right	App. Total	Left	Thru	Right	App. Total	Left	Thru	Right	App. Total	Left	Thru	Right	App. Total	Int. Total
Peak Hour Analysis From 07:15 AM to 08:00 AM - Peak 1 of 1																	
Peak Hour for Entire Intersection Begins at 07:15 AM																	
07:15 AM	0	**7**	3	**10**	**1**	8	**1**	10	**1**	0	6	7	0	8	0	8	35
07:30 AM	0	3	3	6	0	3	1	4	0	3	**9**	12	**2**	4	0	6	28
07:45 AM	0	2	3	5	1	6	0	7	1	**5**	8	**14**	2	8	**1**	11	37
08:00 AM	0	5	**5**	10	1	**10**	1	**12**	0	1	5	6	1	**11**	1	**13**	**41**
Total Volume	0	17	14	31	3	27	3	33	2	9	28	39	5	31	2	38	141
% App. Total	0	54.8	45.2		9.1	81.8	9.1		5.1	23.1	71.8		13.2	81.6	5.3		
PHF	.000	.607	.700	.775	.750	.675	.750	.688	.500	.450	.778	.696	.625	.705	.500	.731	.860

Counts Unlimited
PO Box 1178
Corona, CA 92878
(951) 268-6268

City of Irwindale
N/S: Rivergrade Road
E/W: Live Oak Avenue
Weather: Clear

File Name : 09_IRW_Riv Lo AM
Site Code : 05117783
Start Date : 11/28/2017
Page No : 2

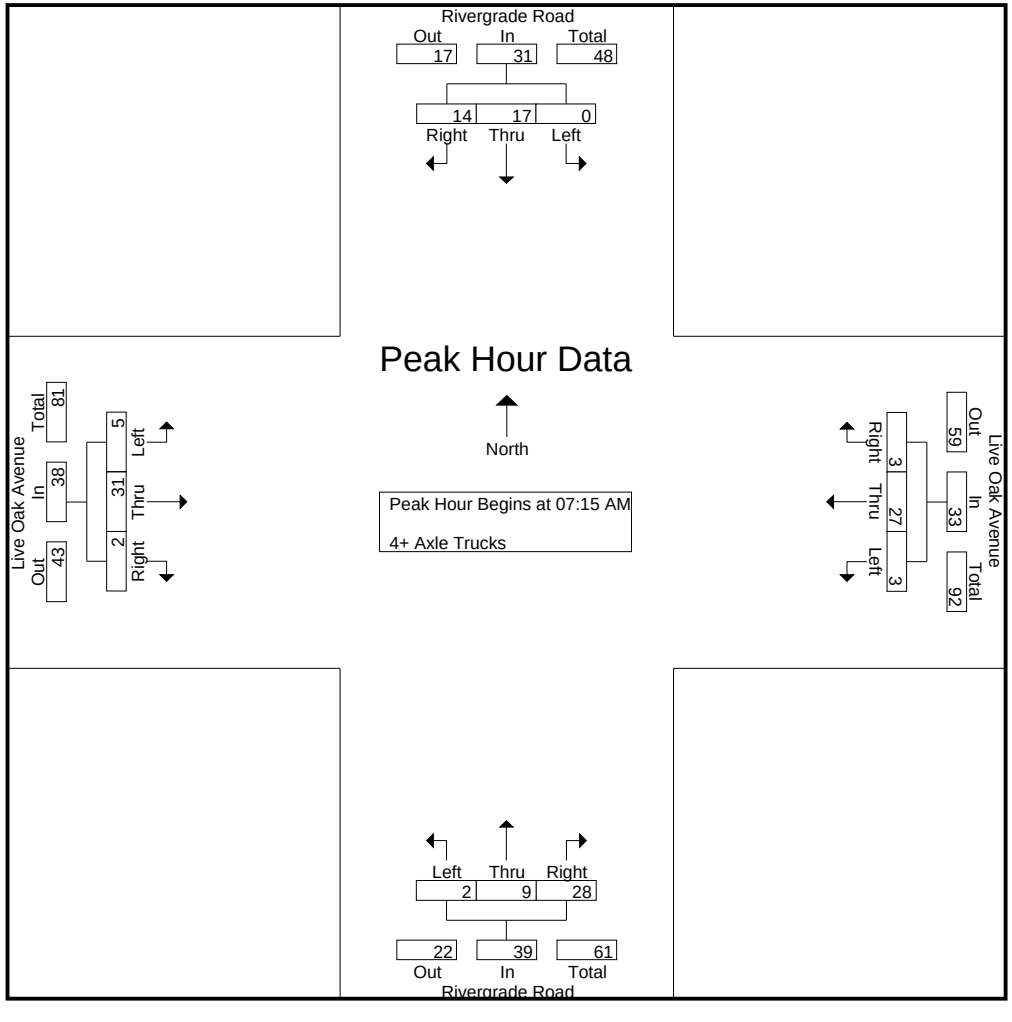

Counts Unlimited
PO Box 1178
Corona, CA 92878
(951) 268-6268

City of Irwindale
N/S: Rivergrade Road
E/W: Live Oak Avenue
Weather: Clear

File Name : 09_IRW_Riv Lo AM
Site Code : 05117783
Start Date : 11/28/2017
Page No : 3

	Rivergrade Road Southbound				Live Oak Avenue Westbound				Rivergrade Road Northbound				Live Oak Avenue Eastbound				
Start Time	Left	Thru	Right	App. Total	Left	Thru	Right	App. Total	Left	Thru	Right	App. Total	Left	Thru	Right	App. Total	Int. Total
Peak Hour Analysis From 07:15 AM to 08:00 AM - Peak 1 of 1																	
Peak Hour for Each Approach Begins at:																	
	07:15 AM				07:15 AM				07:15 AM				07:15 AM				
+0 mins.	0	**7**	3	**10**	**1**	8	**1**	10	**1**	0	6	7	0	8	0	8	
+15 mins.	0	3	3	6	0	3	1	4	0	3	**9**	12	**2**	4	0	6	
+30 mins.	0	2	3	5	1	6	0	7	1	**5**	8	**14**	2	8	**1**	11	
+45 mins.	0	5	**5**	10	1	**10**	1	**12**	0	1	5	6	1	**11**	1	**13**	
Total Volume	0	17	14	31	3	27	3	33	2	9	28	39	5	31	2	38	
% App. Total	0	54.8	45.2		9.1	81.8	9.1		5.1	23.1	71.8		13.2	81.6	5.3		
PHF	.000	.607	.700	.775	.750	.675	.750	.688	.500	.450	.778	.696	.625	.705	.500	.731	

Counts Unlimited
PO Box 1178
Corona, CA 92878
(951) 268-6268

City of Irwindale
N/S: Rivergrade Road
E/W: Live Oak Avenue
Weather: Clear

File Name : 09_IRW_Riv Lo PM
Site Code : 05117783
Start Date : 11/28/2017
Page No : 1

Groups Printed- Passenger Vehicles - Large 2 Axle Vehicles - 3 Axle Vehicles - 4+ Axle Trucks

	Rivergrade Road Southbound					Live Oak Avenue Westbound					Rivergrade Road Northbound					Live Oak Avenue Eastbound							
Start Time	Left	Thru	Right	RTOR	App. Total	Left	Thru	Right	RTOR	App. Total	Left	Thru	Right	RTOR	App. Total	Left	Thru	Right	RTOR	App. Total	Exclu. Total	Inclu. Total	Int. Total
04:00 PM	4	8	14	13	26	20	154	1	1	175	17	25	81	39	123	12	349	5	0	366	53	690	743
04:15 PM	3	11	7	4	21	18	154	2	0	174	19	27	83	30	129	8	362	11	0	381	34	705	739
04:30 PM	1	7	16	14	24	30	178	1	0	209	35	57	122	38	214	5	360	0	0	365	52	812	864
04:45 PM	6	12	10	4	28	29	171	6	1	206	43	41	119	42	203	9	383	10	1	402	48	839	887
Total	14	38	47	35	99	97	657	10	2	764	114	150	405	149	669	34	1454	26	1	1514	187	3046	3233
05:00 PM	6	12	15	11	33	33	176	3	0	212	39	46	154	71	239	11	385	5	1	401	83	885	968
05:15 PM	12	10	13	8	35	25	160	2	0	187	45	49	86	33	180	12	347	6	1	365	42	767	809
05:30 PM	6	3	9	7	18	24	148	6	3	178	39	31	90	44	160	12	427	7	0	446	54	802	856
05:45 PM	6	8	6	4	20	23	143	3	1	169	23	27	93	24	143	11	365	9	0	385	29	717	746
Total	30	33	43	30	106	105	627	14	4	746	146	153	423	172	722	46	1524	27	2	1597	208	3171	3379
Grand Total	44	71	90	65	205	202	1284	24	6	1510	260	303	828	321	1391	80	2978	53	3	3111	395	6217	6612
Apprch %	21.5	34.6	43.9			13.4	85	1.6			18.7	21.8	59.5			2.6	95.7	1.7					
Total %	0.7	1.1	1.4		3.3	3.2	20.7	0.4		24.3	4.2	4.9	13.3		22.4	1.3	47.9	0.9		50	6	94	
Passenger Vehicles	41	66	73		234	196	1197	19		1418	253	290	790		1638	75	2859	53		2990	0	0	6280
% Passenger Vehicles	93.2	93	81.1	83.1	86.7	97	93.2	79.2	100	93.5	97.3	95.7	95.4	95	95.7	93.8	96	100	100	96	0	0	95
Large 2 Axle Vehicles	1	0	5		11	3	42	2		47	1	10	21		41	3	89	0		92	0	0	191
% Large 2 Axle Vehicles	2.3	0	5.6	7.7	4.1	1.5	3.3	8.3	0	3.1	0.4	3.3	2.5	2.8	2.4	3.8	3	0	0	3	0	0	2.9
3 Axle Vehicles	1	0	2		3	1	18	0		19	2	1	6		9	0	7	0		7	0	0	38
% 3 Axle Vehicles	2.3	0	2.2	0	1.1	0.5	1.4	0	0	1.3	0.8	0.3	0.7	0	0.5	0	0.2	0	0	0.2	0	0	0.6
4+ Axle Trucks	1	5	10		22	2	27	3		32	4	2	11		24	2	23	0		25	0	0	103
% 4+ Axle Trucks	2.3	7	11.1	9.2	8.1	1	2.1	12.5	0	2.1	1.5	0.7	1.3	2.2	1.4	2.5	0.8	0	0	0.8	0	0	1.6

	Rivergrade Road Southbound				Live Oak Avenue Westbound				Rivergrade Road Northbound				Live Oak Avenue Eastbound				
Start Time	Left	Thru	Right	App. Total	Left	Thru	Right	App. Total	Left	Thru	Right	App. Total	Left	Thru	Right	App. Total	Int. Total
Peak Hour Analysis From 04:00 PM to 05:45 PM - Peak 1 of 1																	
Peak Hour for Entire Intersection Begins at 04:30 PM																	
04:30 PM	1	7	**16**	24	30	**178**	1	209	35	**57**	122	214	5	360	0	365	812
04:45 PM	6	**12**	10	28	29	171	**6**	206	43	41	119	203	9	383	**10**	**402**	839
05:00 PM	6	12	15	33	**33**	176	3	**212**	39	46	**154**	**239**	11	**385**	5	401	**885**
05:15 PM	**12**	10	13	**35**	25	160	2	187	**45**	49	86	180	**12**	347	6	365	767
Total Volume	25	41	54	120	117	685	12	814	162	193	481	836	37	1475	21	1533	3303
% App. Total	20.8	34.2	45		14.4	84.2	1.5		19.4	23.1	57.5		2.4	96.2	1.4		
PHF	.521	.854	.844	.857	.886	.962	.500	.960	.900	.846	.781	.874	.771	.958	.525	.953	.933

Counts Unlimited
PO Box 1178
Corona, CA 92878
(951) 268-6268

City of Irwindale
N/S: Rivergrade Road
E/W: Live Oak Avenue
Weather: Clear

File Name : 09_IRW_Riv Lo PM
Site Code : 05117783
Start Date : 11/28/2017
Page No : 2

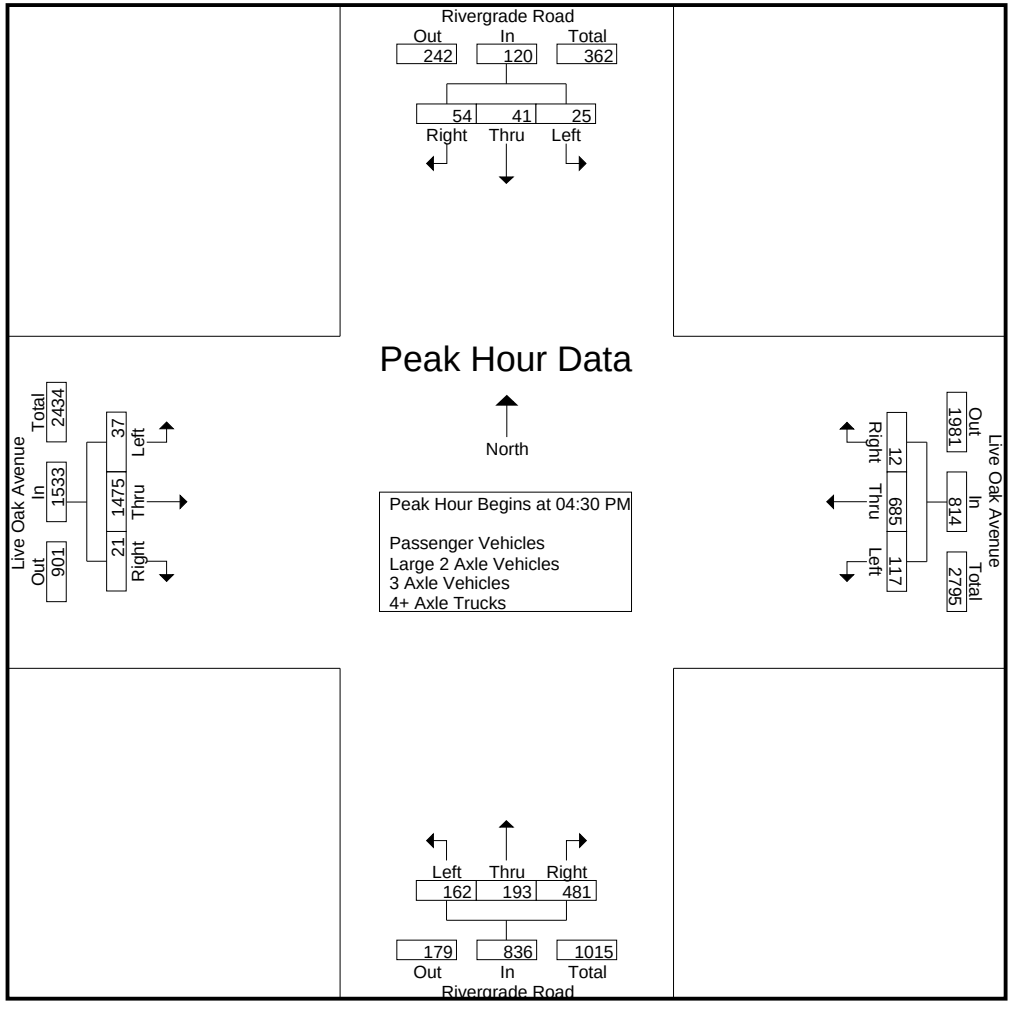

Counts Unlimited
PO Box 1178
Corona, CA 92878
(951) 268-6268

City of Irwindale
N/S: Rivergrade Road
E/W: Live Oak Avenue
Weather: Clear

File Name : 09_IRW_Riv Lo PM
Site Code : 05117783
Start Date : 11/28/2017
Page No : 3

	Rivergrade Road Southbound				Live Oak Avenue Westbound				Rivergrade Road Northbound				Live Oak Avenue Eastbound				
Start Time	Left	Thru	Right	App. Total	Left	Thru	Right	App. Total	Left	Thru	Right	App. Total	Left	Thru	Right	App. Total	Int. Total
Peak Hour Analysis From 04:00 PM to 05:45 PM - Peak 1 of 1																	
Peak Hour for Each Approach Begins at:																	
	04:30 PM				04:30 PM				04:30 PM				04:45 PM				
+0 mins.	1	7	**16**	24	30	**178**	1	209	35	**57**	122	214	9	383	**10**	402	
+15 mins.	6	**12**	10	28	29	171	**6**	206	43	41	119	203	11	385	5	401	
+30 mins.	6	12	15	33	**33**	176	3	**212**	39	46	**154**	**239**	**12**	347	6	365	
+45 mins.	**12**	10	13	**35**	25	160	2	187	**45**	49	86	180	12	**427**	7	**446**	
Total Volume	25	41	54	120	117	685	12	814	162	193	481	836	44	1542	28	1614	
% App. Total	20.8	34.2	45		14.4	84.2	1.5		19.4	23.1	57.5		2.7	95.5	1.7		
PHF	.521	.854	.844	.857	.886	.962	.500	.960	.900	.846	.781	.874	.917	.903	.700	.905	

Counts Unlimited
PO Box 1178
Corona, CA 92878
(951) 268-6268

City of Irwindale
N/S: Rivergrade Road
E/W: Live Oak Avenue
Weather: Clear

File Name : 09_IRW_Riv Lo PM
Site Code : 05117783
Start Date : 11/28/2017
Page No : 1

Groups Printed- Passenger Vehicles

	Rivergrade Road Southbound					Live Oak Avenue Westbound					Rivergrade Road Northbound					Live Oak Avenue Eastbound							
Start Time	Left	Thru	Right	RTOR	App. Total	Left	Thru	Right	RTOR	App. Total	Left	Thru	Right	RTOR	App. Total	Left	Thru	Right	RTOR	App. Total	Exclu. Total	Inclu. Total	Int. Total
04:00 PM	3	8	12	11	23	20	137	1	1	158	16	23	70	34	109	11	322	5	0	338	46	628	674
04:15 PM	3	10	6	4	19	17	134	1	0	152	17	26	78	27	121	8	342	11	0	361	31	653	684
04:30 PM	1	7	12	11	20	29	167	0	0	196	35	53	117	36	205	4	342	0	0	346	47	767	814
04:45 PM	6	11	7	4	24	28	163	4	1	195	41	39	115	41	195	9	371	10	1	390	47	804	851
Total	13	36	37	30	86	94	601	6	2	701	109	141	380	138	630	32	1377	26	1	1435	171	2852	3023
05:00 PM	5	11	12	8	28	33	166	2	0	201	38	44	148	69	230	11	373	5	1	389	78	848	926
05:15 PM	12	8	12	7	32	24	149	2	0	175	45	48	84	33	177	11	337	6	1	354	41	738	779
05:30 PM	5	3	8	6	16	23	144	6	3	173	38	30	87	41	155	10	416	7	0	433	50	777	827
05:45 PM	6	8	4	3	18	22	137	3	1	162	23	27	91	24	141	11	356	9	0	376	28	697	725
Total	28	30	36	24	94	102	596	13	4	711	144	149	410	167	703	43	1482	27	2	1552	197	3060	3257
Grand Total	41	66	73	54	180	196	1197	19	6	1412	253	290	790	305	1333	75	2859	53	3	2987	368	5912	6280
Apprch %	22.8	36.7	40.6			13.9	84.8	1.3			19	21.8	59.3			2.5	95.7	1.8					
Total %	0.7	1.1	1.2		3	3.3	20.2	0.3		23.9	4.3	4.9	13.4		22.5	1.3	48.4	0.9		50.5	5.9	94.1	

	Rivergrade Road Southbound				Live Oak Avenue Westbound				Rivergrade Road Northbound				Live Oak Avenue Eastbound				
Start Time	Left	Thru	Right	App. Total	Left	Thru	Right	App. Total	Left	Thru	Right	App. Total	Left	Thru	Right	App. Total	Int. Total
Peak Hour Analysis From 04:30 PM to 05:15 PM - Peak 1 of 1																	
Peak Hour for Entire Intersection Begins at 04:30 PM																	
04:30 PM	1	7	**12**	20	29	**167**	0	196	35	**53**	117	205	4	342	0	346	767
04:45 PM	6	**11**	7	24	28	163	**4**	195	41	39	115	195	9	371	**10**	**390**	804
05:00 PM	5	11	12	28	**33**	166	2	**201**	38	44	**148**	**230**	**11**	**373**	5	389	**848**
05:15 PM	**12**	8	12	**32**	24	149	2	175	**45**	48	84	177	11	337	6	354	738
Total Volume	24	37	43	104	114	645	8	767	159	184	464	807	35	1423	21	1479	3157
% App. Total	23.1	35.6	41.3		14.9	84.1	1		19.7	22.8	57.5		2.4	96.2	1.4		
PHF	.500	.841	.896	.813	.864	.966	.500	.954	.883	.868	.784	.877	.795	.954	.525	.948	.931

Counts Unlimited
PO Box 1178
Corona, CA 92878
(951) 268-6268

City of Irwindale
N/S: Rivergrade Road
E/W: Live Oak Avenue
Weather: Clear

File Name : 09_IRW_Riv Lo PM
Site Code : 05117783
Start Date : 11/28/2017
Page No : 2

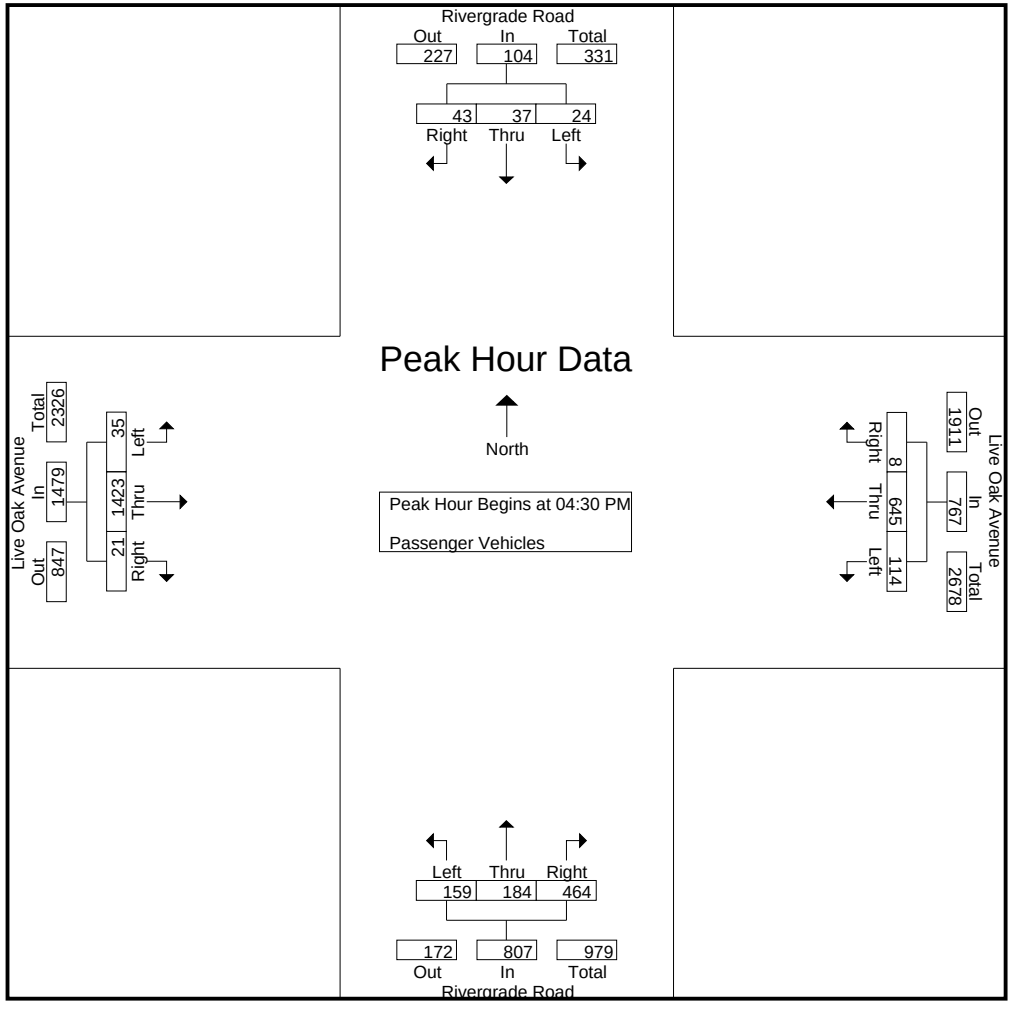

Counts Unlimited
PO Box 1178
Corona, CA 92878
(951) 268-6268

City of Irwindale
N/S: Rivergrade Road
E/W: Live Oak Avenue
Weather: Clear

File Name : 09_IRW_Riv Lo PM
Site Code : 05117783
Start Date : 11/28/2017
Page No : 3

	Rivergrade Road Southbound				Live Oak Avenue Westbound				Rivergrade Road Northbound				Live Oak Avenue Eastbound				
Start Time	Left	Thru	Right	App. Total	Left	Thru	Right	App. Total	Left	Thru	Right	App. Total	Left	Thru	Right	App. Total	Int. Total
Peak Hour Analysis From 04:30 PM to 05:15 PM - Peak 1 of 1																	
Peak Hour for Each Approach Begins at:																	
	04:30 PM				04:30 PM				04:30 PM				04:30 PM				
+0 mins.	1	7	**12**	20	29	**167**	0	196	35	**53**	117	205	4	342	0	346	
+15 mins.	6	**11**	7	24	28	163	**4**	195	41	39	115	195	9	371	**10**	**390**	
+30 mins.	5	11	12	28	**33**	166	2	**201**	38	44	**148**	**230**	**11**	**373**	5	389	
+45 mins.	**12**	8	12	**32**	24	149	2	175	**45**	48	84	177	11	337	6	354	
Total Volume	24	37	43	104	114	645	8	767	159	184	464	807	35	1423	21	1479	
% App. Total	23.1	35.6	41.3		14.9	84.1	1		19.7	22.8	57.5		2.4	96.2	1.4		
PHF	.500	.841	.896	.813	.864	.966	.500	.954	.883	.868	.784	.877	.795	.954	.525	.948	

Counts Unlimited
PO Box 1178
Corona, CA 92878
(951) 268-6268

City of Irwindale
N/S: Rivergrade Road
E/W: Live Oak Avenue
Weather: Clear

File Name : 09_IRW_Riv Lo PM
Site Code : 05117783
Start Date : 11/28/2017
Page No : 1

Groups Printed- Large 2 Axle Vehicles

	Rivergrade Road Southbound					Live Oak Avenue Westbound					Rivergrade Road Northbound					Live Oak Avenue Eastbound							
Start Time	Left	Thru	Right	RTOR	App. Total	Left	Thru	Right	RTOR	App. Total	Left	Thru	Right	RTOR	App. Total	Left	Thru	Right	RTOR	App. Total	Exclu. Total	Inclu. Total	Int. Total
04:00 PM	0	0	0	0	0	0	9	0	0	9	0	2	5	2	7	0	19	0	0	19	2	35	37
04:15 PM	0	0	0	0	0	0	7	1	0	8	0	1	4	3	5	0	13	0	0	13	3	26	29
04:30 PM	0	0	2	2	2	0	4	0	0	4	0	4	4	1	8	0	12	0	0	12	3	26	29
04:45 PM	0	0	0	0	0	1	4	1	0	6	0	1	2	1	3	0	7	0	0	7	1	16	17
Total	0	0	2	2	2	1	24	2	0	27	0	8	15	7	23	0	51	0	0	51	9	103	112
05:00 PM	1	0	1	1	2	0	6	0	0	6	0	0	3	1	3	0	10	0	0	10	2	21	23
05:15 PM	0	0	1	1	1	0	7	0	0	7	0	1	1	0	2	1	10	0	0	11	1	21	22
05:30 PM	0	0	0	0	0	1	3	0	0	4	1	1	1	1	3	2	10	0	0	12	1	19	20
05:45 PM	0	0	1	1	1	1	2	0	0	3	0	0	1	0	1	0	8	0	0	8	1	13	14
Total	1	0	3	3	4	2	18	0	0	20	1	2	6	2	9	3	38	0	0	41	5	74	79
Grand Total	1	0	5	5	6	3	42	2	0	47	1	10	21	9	32	3	89	0	0	92	14	177	191
Apprch %	16.7	0	83.3			6.4	89.4	4.3			3.1	31.2	65.6			3.3	96.7	0					
Total %	0.6	0	2.8		3.4	1.7	23.7	1.1		26.6	0.6	5.6	11.9		18.1	1.7	50.3	0		52	7.3	92.7	

	Rivergrade Road Southbound				Live Oak Avenue Westbound				Rivergrade Road Northbound				Live Oak Avenue Eastbound				
Start Time	Left	Thru	Right	App. Total	Left	Thru	Right	App. Total	Left	Thru	Right	App. Total	Left	Thru	Right	App. Total	Int. Total
Peak Hour Analysis From 04:30 PM to 05:15 PM - Peak 1 of 1																	
Peak Hour for Entire Intersection Begins at 04:30 PM																	
04:30 PM	0	0	**2**	**2**	0	4	0	4	0	**4**	**4**	**8**	0	**12**	0	**12**	**26**
04:45 PM	0	0	0	0	**1**	4	**1**	6	0	1	2	3	0	7	0	7	16
05:00 PM	**1**	0	1	2	0	6	0	6	0	0	3	3	0	10	0	10	21
05:15 PM	0	0	1	1	0	**7**	0	**7**	0	1	1	2	**1**	10	0	11	21
Total Volume	1	0	4	5	1	21	1	23	0	6	10	16	1	39	0	40	84
% App. Total	20	0	80		4.3	91.3	4.3		0	37.5	62.5		2.5	97.5	0		
PHF	.250	.000	.500	.625	.250	.750	.250	.821	.000	.375	.625	.500	.250	.813	.000	.833	.808

Counts Unlimited
PO Box 1178
Corona, CA 92878
(951) 268-6268

City of Irwindale
N/S: Rivergrade Road
E/W: Live Oak Avenue
Weather: Clear

File Name : 09_IRW_Riv Lo PM
Site Code : 05117783
Start Date : 11/28/2017
Page No : 2

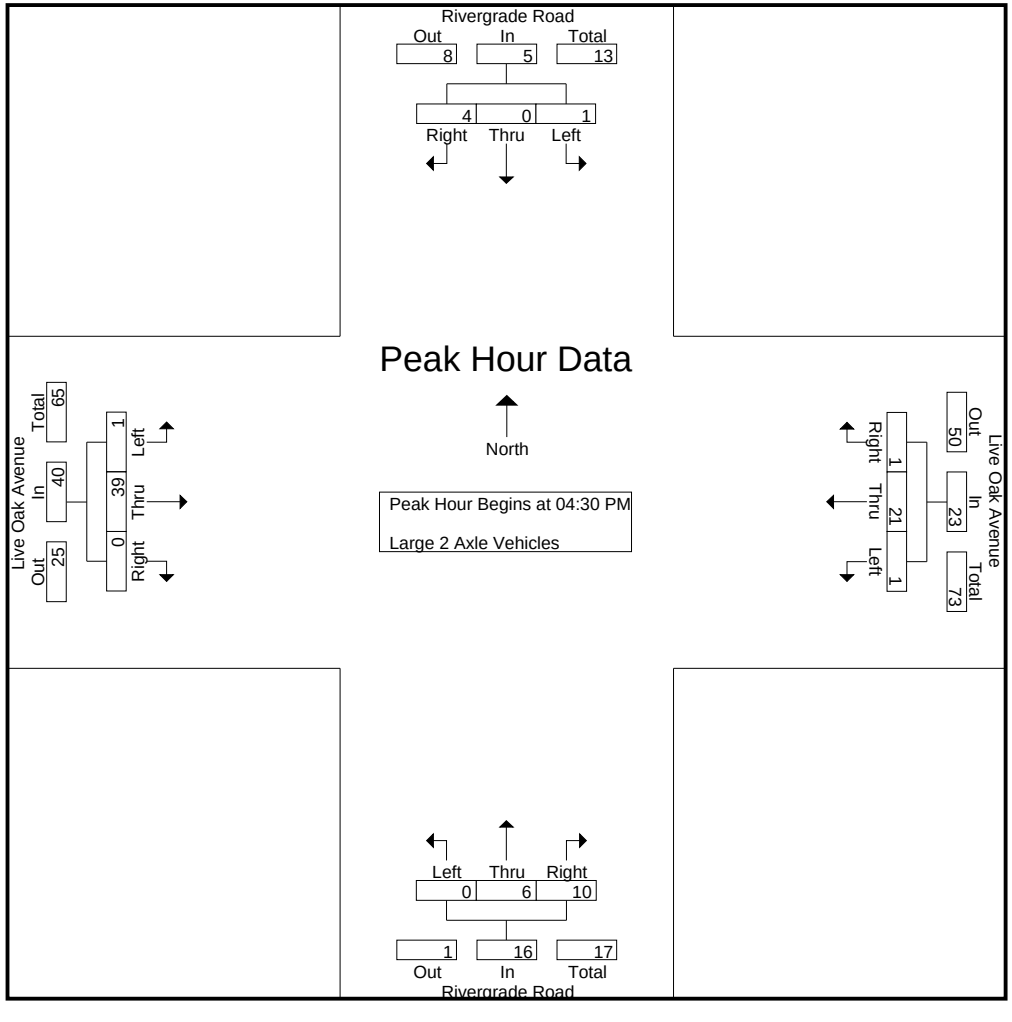

Counts Unlimited
PO Box 1178
Corona, CA 92878
(951) 268-6268

City of Irwindale
N/S: Rivergrade Road
E/W: Live Oak Avenue
Weather: Clear

File Name : 09_IRW_Riv Lo PM
Site Code : 05117783
Start Date : 11/28/2017

	Rivergrade Road Southbound				Live Oak Avenue Westbound				Rivergrade Road Northbound				Live Oak Avenue Eastbound				
Start Time	Left	Thru	Right	App. Total	Left	Thru	Right	App. Total	Left	Thru	Right	App. Total	Left	Thru	Right	App. Total	Int. Total
Peak Hour Analysis From 04:30 PM to 05:15 PM - Peak 1 of 1																	
Peak Hour for Each Approach Begins at:																	
	04:30 PM				04:30 PM				04:30 PM				04:30 PM				
+0 mins.	0	0	**2**	**2**	0	4	0	4	0	**4**	**4**	**8**	0	**12**	0	**12**	
+15 mins.	0	0	0	0	**1**	4	**1**	6	0	1	2	3	0	7	0	7	
+30 mins.	**1**	0	1	2	0	6	0	6	0	0	3	3	0	10	0	10	
+45 mins.	0	0	1	1	0	**7**	0	**7**	0	1	1	2	**1**	10	0	11	
Total Volume	1	0	4	5	1	21	1	23	0	6	10	16	1	39	0	40	
% App. Total	20	0	80		4.3	91.3	4.3		0	37.5	62.5		2.5	97.5	0		
PHF	.250	.000	.500	.625	.250	.750	.250	.821	.000	.375	.625	.500	.250	.813	.000	.833	

Counts Unlimited
PO Box 1178
Corona, CA 92878
(951) 268-6268

City of Irwindale
N/S: Rivergrade Road
E/W: Live Oak Avenue
Weather: Clear

File Name : 09_IRW_Riv Lo PM
Site Code : 05117783
Start Date : 11/28/2017
Page No : 1

Groups Printed- 3 Axle Vehicles

	Rivergrade Road Southbound					Live Oak Avenue Westbound					Rivergrade Road Northbound					Live Oak Avenue Eastbound							
Start Time	Left	Thru	Right	RTOR	App. Total	Left	Thru	Right	RTOR	App. Total	Left	Thru	Right	RTOR	App. Total	Left	Thru	Right	RTOR	App. Total	Exclu. Total	Inclu. Total	Int. Total
04:00 PM	0	0	0	0	0	0	3	0	0	3	0	0	3	0	3	0	2	0	0	2	0	8	8
04:15 PM	0	0	1	0	1	1	7	0	0	8	0	0	1	0	1	0	3	0	0	3	0	13	13
04:30 PM	0	0	0	0	0	0	1	0	0	1	0	0	0	0	0	0	1	0	0	1	0	2	2
04:45 PM	0	0	1	0	1	0	0	0	0	0	1	1	2	0	4	0	1	0	0	1	0	6	6
Total	0	0	2	0	2	1	11	0	0	12	1	1	6	0	8	0	7	0	0	7	0	29	29
05:00 PM	0	0	0	0	0	0	1	0	0	1	1	0	0	0	1	0	0	0	0	0	0	2	2
05:15 PM	0	0	0	0	0	0	1	0	0	1	0	0	0	0	0	0	0	0	0	0	0	1	1
05:30 PM	1	0	0	0	1	0	1	0	0	1	0	0	0	0	0	0	0	0	0	0	0	2	2
05:45 PM	0	0	0	0	0	0	4	0	0	4	0	0	0	0	0	0	0	0	0	0	0	4	4
Total	1	0	0	0	1	0	7	0	0	7	1	0	0	0	1	0	0	0	0	0	0	9	9
Grand Total	1	0	2	0	3	1	18	0	0	19	2	1	6	0	9	0	7	0	0	7	0	38	38
Apprch %	33.3	0	66.7			5.3	94.7	0			22.2	11.1	66.7			0	100	0					
Total %	2.6	0	5.3		7.9	2.6	47.4	0		50	5.3	2.6	15.8		23.7	0	18.4	0		18.4	0	100	

	Rivergrade Road Southbound				Live Oak Avenue Westbound				Rivergrade Road Northbound				Live Oak Avenue Eastbound				
Start Time	Left	Thru	Right	App. Total	Left	Thru	Right	App. Total	Left	Thru	Right	App. Total	Left	Thru	Right	App. Total	Int. Total
Peak Hour Analysis From 04:30 PM to 05:15 PM - Peak 1 of 1																	
Peak Hour for Entire Intersection Begins at 04:30 PM																	
04:30 PM	0	0	0	0	0	**1**	0	**1**	0	0	0	0	0	**1**	0	**1**	2
04:45 PM	0	0	**1**	**1**	0	0	0	0	**1**	**1**	**2**	**4**	0	1	0	1	**6**
05:00 PM	0	0	0	0	0	1	0	1	1	0	0	1	0	0	0	0	2
05:15 PM	0	0	0	0	0	1	0	1	0	0	0	0	0	0	0	0	1
Total Volume	0	0	1	1	0	3	0	3	2	1	2	5	0	2	0	2	11
% App. Total	0	0	100		0	100	0		40	20	40		0	100	0		
PHF	.000	.000	.250	.250	.000	.750	.000	.750	.500	.250	.250	.313	.000	.500	.000	.500	.458

Counts Unlimited
PO Box 1178
Corona, CA 92878
(951) 268-6268

City of Irwindale
N/S: Rivergrade Road
E/W: Live Oak Avenue
Weather: Clear

File Name : 09_IRW_Riv Lo PM
Site Code : 05117783
Start Date : 11/28/2017
Page No : 2

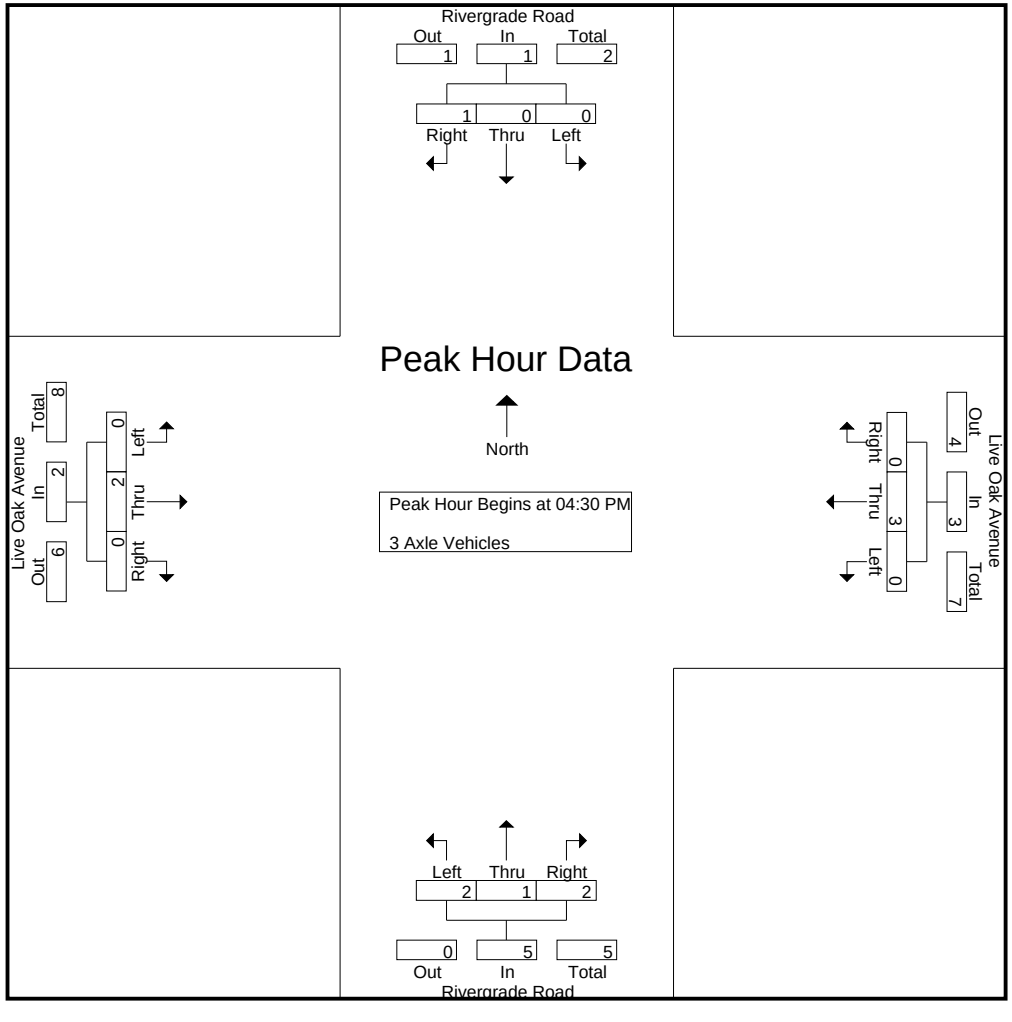

Counts Unlimited
PO Box 1178
Corona, CA 92878
(951) 268-6268

City of Irwindale
N/S: Rivergrade Road
E/W: Live Oak Avenue
Weather: Clear

File Name : 09_IRW_Riv Lo PM
Site Code : 05117783
Start Date : 11/28/2017
Page No : 3

	Rivergrade Road Southbound				Live Oak Avenue Westbound				Rivergrade Road Northbound				Live Oak Avenue Eastbound				
Start Time	Left	Thru	Right	App. Total	Left	Thru	Right	App. Total	Left	Thru	Right	App. Total	Left	Thru	Right	App. Total	Int. Total
Peak Hour Analysis From 04:30 PM to 05:15 PM - Peak 1 of 1																	
Peak Hour for Each Approach Begins at:																	
	04:30 PM				04:30 PM				04:30 PM				04:30 PM				
+0 mins.	0	0	0	0	0	**1**	0	**1**	0	0	0	0	0	**1**	0	**1**	
+15 mins.	0	0	**1**	**1**	0	0	0	0	**1**	**1**	**2**	**4**	0	1	0	1	
+30 mins.	0	0	0	0	0	1	0	1	1	0	0	1	0	0	0	0	
+45 mins.	0	0	0	0	0	1	0	1	0	0	0	0	0	0	0	0	
Total Volume	0	0	1	1	0	3	0	3	2	1	2	5	0	2	0	2	
% App. Total	0	0	100		0	100	0		40	20	40		0	100	0		
PHF	.000	.000	.250	.250	.000	.750	.000	.750	.500	.250	.250	.313	.000	.500	.000	.500	

Counts Unlimited
PO Box 1178
Corona, CA 92878
(951) 268-6268

City of Irwindale
N/S: Rivergrade Road
E/W: Live Oak Avenue
Weather: Clear

File Name : 09_IRW_Riv Lo PM
Site Code : 05117783
Start Date : 11/28/2017
Page No : 1

Groups Printed- 4+ Axle Trucks

	Rivergrade Road Southbound					Live Oak Avenue Westbound					Rivergrade Road Northbound					Live Oak Avenue Eastbound							
Start Time	Left	Thru	Right	RTOR	App. Total	Left	Thru	Right	RTOR	App. Total	Left	Thru	Right	RTOR	App. Total	Left	Thru	Right	RTOR	App. Total	Exclu. Total	Inclu. Total	Int. Total
04:00 PM	1	0	2	2	3	0	5	0	0	5	1	0	3	3	4	1	6	0	0	7	5	19	24
04:15 PM	0	1	0	0	1	0	6	0	0	6	2	0	0	0	2	0	4	0	0	4	0	13	13
04:30 PM	0	0	2	1	2	1	6	1	0	8	0	0	1	1	1	1	5	0	0	6	2	17	19
04:45 PM	0	1	2	0	3	0	4	1	0	5	1	0	0	0	1	0	4	0	0	4	0	13	13
Total	1	2	6	3	9	1	21	2	0	24	4	0	4	4	8	2	19	0	0	21	7	62	69
05:00 PM	0	1	2	2	3	0	3	1	0	4	0	2	3	1	5	0	2	0	0	2	3	14	17
05:15 PM	0	2	0	0	2	1	3	0	0	4	0	0	1	0	1	0	0	0	0	0	0	7	7
05:30 PM	0	0	1	1	1	0	0	0	0	0	0	0	2	2	2	0	1	0	0	1	3	4	7
05:45 PM	0	0	1	0	1	0	0	0	0	0	0	0	1	0	1	0	1	0	0	1	0	3	3
Total	0	3	4	3	7	1	6	1	0	8	0	2	7	3	9	0	4	0	0	4	6	28	34
Grand Total	1	5	10	6	16	2	27	3	0	32	4	2	11	7	17	2	23	0	0	25	13	90	103
Apprch %	6.2	31.2	62.5			6.2	84.4	9.4			23.5	11.8	64.7			8	92	0					
Total %	1.1	5.6	11.1		17.8	2.2	30	3.3		35.6	4.4	2.2	12.2		18.9	2.2	25.6	0		27.8	12.6	87.4	

	Rivergrade Road Southbound				Live Oak Avenue Westbound				Rivergrade Road Northbound				Live Oak Avenue Eastbound				
Start Time	Left	Thru	Right	App. Total	Left	Thru	Right	App. Total	Left	Thru	Right	App. Total	Left	Thru	Right	App. Total	Int. Total
Peak Hour Analysis From 04:30 PM to 05:15 PM - Peak 1 of 1																	
Peak Hour for Entire Intersection Begins at 04:30 PM																	
04:30 PM	0	0	**2**	2	**1**	**6**	**1**	**8**	0	0	1	1	**1**	**5**	0	**6**	**17**
04:45 PM	0	1	2	**3**	0	4	1	5	**1**	0	0	1	0	4	0	4	13
05:00 PM	0	1	2	3	0	3	1	4	0	**2**	**3**	**5**	0	2	0	2	14
05:15 PM	0	**2**	0	2	1	3	0	4	0	0	1	1	0	0	0	0	7
Total Volume	0	4	6	10	2	16	3	21	1	2	5	8	1	11	0	12	51
% App. Total	0	40	60		9.5	76.2	14.3		12.5	25	62.5		8.3	91.7	0		
PHF	.000	.500	.750	.833	.500	.667	.750	.656	.250	.250	.417	.400	.250	.550	.000	.500	.750

Counts Unlimited
PO Box 1178
Corona, CA 92878
(951) 268-6268

City of Irwindale
N/S: Rivergrade Road
E/W: Live Oak Avenue
Weather: Clear

File Name : 09_IRW_Riv Lo PM
Site Code : 05117783
Start Date : 11/28/2017
Page No : 2

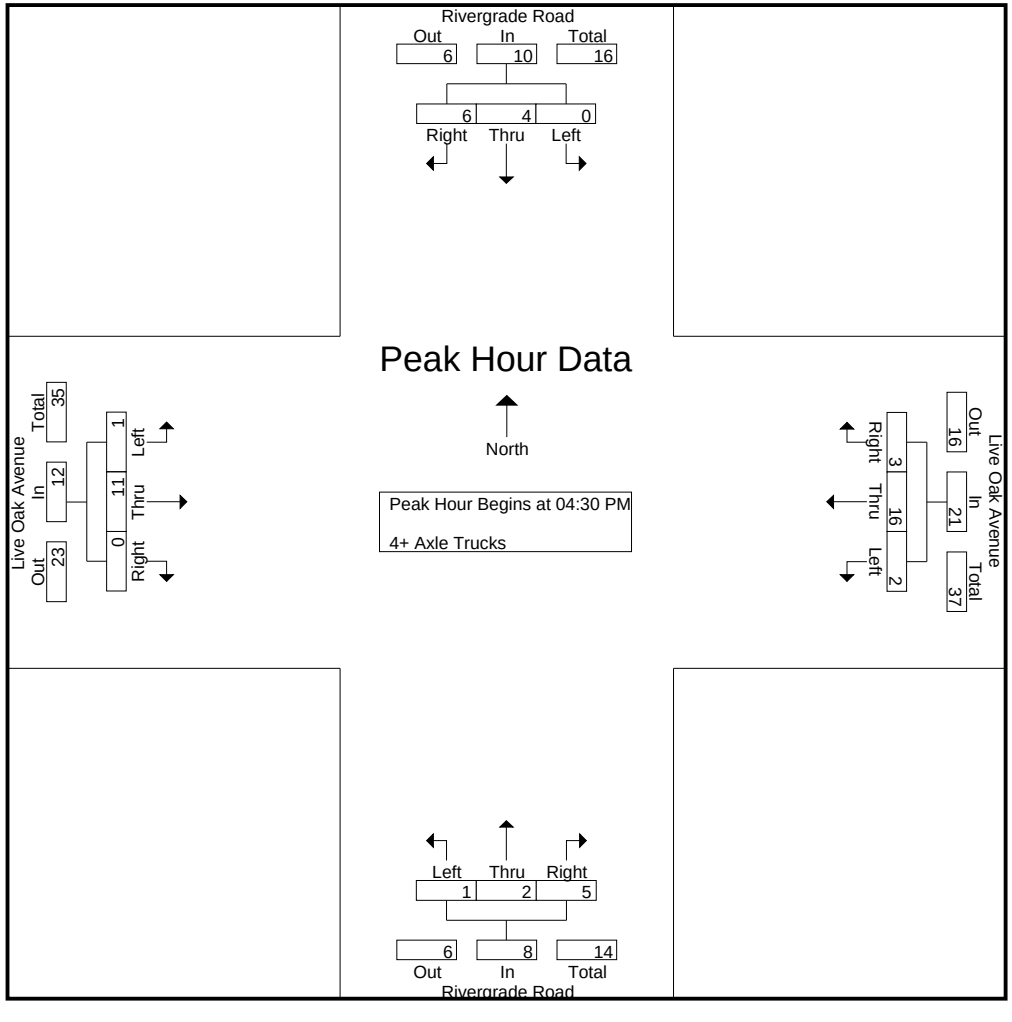

Counts Unlimited
PO Box 1178
Corona, CA 92878
(951) 268-6268

City of Irwindale
N/S: Rivergrade Road
E/W: Live Oak Avenue
Weather: Clear

File Name : 09_IRW_Riv Lo PM
Site Code : 05117783
Start Date : 11/28/2017

	Rivergrade Road Southbound				Live Oak Avenue Westbound				Rivergrade Road Northbound				Live Oak Avenue Eastbound				
Start Time	Left	Thru	Right	App. Total	Left	Thru	Right	App. Total	Left	Thru	Right	App. Total	Left	Thru	Right	App. Total	Int. Total
Peak Hour Analysis From 04:30 PM to 05:15 PM - Peak 1 of 1																	
Peak Hour for Each Approach Begins at:																	
	04:30 PM				04:30 PM				04:30 PM				04:30 PM				
+0 mins.	0	0	**2**	2	**1**	**6**	**1**	**8**	0	0	1	1	**1**	**5**	0	**6**	
+15 mins.	0	1	2	**3**	0	4	1	5	**1**	0	0	1	0	4	0	4	
+30 mins.	0	1	2	3	0	3	1	4	0	**2**	**3**	**5**	0	2	0	2	
+45 mins.	0	**2**	0	2	1	3	0	4	0	0	1	1	0	0	0	0	
Total Volume	0	4	6	10	2	16	3	21	1	2	5	8	1	11	0	12	
% App. Total	0	40	60		9.5	76.2	14.3		12.5	25	62.5		8.3	91.7	0		
PHF	.000	.500	.750	.833	.500	.667	.750	.656	.250	.250	.417	.400	.250	.550	.000	.500	

Location: Irwindale
N/S: Rivergrade Road
E/W: Live Oak Avenue



Date: 11/28/2017
Day: Tuesday

PEDESTRIANS

	North Leg Rivergrade Road	East Leg Live Oak Avenue	South Leg Rivergrade Road	West Leg Live Oak Avenue	TOTAL
7:00 AM	0	0	0	0	0
7:15 AM	0	2	0	0	2
7:30 AM	0	0	0	0	0
7:45 AM	0	1	0	0	1
8:00 AM	0	1	0	0	1
8:15 AM	0	0	0	0	0
8:30 AM	0	0	0	0	0
8:45 AM	0	0	1	0	1
TOTAL VOLUMES:	0	4	1	0	5

	North Leg Rivergrade Road	East Leg Live Oak Avenue	South Leg Rivergrade Road	West Leg Live Oak Avenue	TOTAL
4:00 PM	0	0	0	0	0
4:15 PM	0	0	0	0	0
4:30 PM	0	0	0	0	0
4:45 PM	0	0	0	0	0
5:00 PM	0	0	0	0	0
5:15 PM	0	2	0	0	2
5:30 PM	1	0	0	0	1
5:45 PM	1	2	0	0	3
TOTAL VOLUMES:	2	4	0	0	6

Counts Unlimited
P.O. Box 1178
Corona, CA 92878
(951) 268-6268

Location: Irwindale
N/S: Rivergrade Road
E/W: Live Oak Avenue

Date: 11/28/2017
Day: Tuesday

BICYCLES

	North Leg Rivergrade Road	East Leg Live Oak Avenue	South Leg Rivergrade Road	West Leg Live Oak Avenue	TOTAL
7:00 AM	1	0	0	1	2
7:15 AM	1	0	0	0	1
7:30 AM	0	0	1	0	1
7:45 AM	0	0	0	0	0
8:00 AM	0	1	1	0	2
8:15 AM	0	0	0	0	0
8:30 AM	0	0	0	0	0
8:45 AM	0	0	0	0	0
TOTAL VOLUMES:	2	1	2	1	6

	North Leg Rivergrade Road	East Leg Live Oak Avenue	South Leg Rivergrade Road	West Leg Live Oak Avenue	TOTAL
4:00 PM	0	0	0	0	0
4:15 PM	0	0	0	0	0
4:30 PM	1	0	0	0	1
4:45 PM	0	1	0	0	1
5:00 PM	1	0	1	0	2
5:15 PM	0	0	0	0	0
5:30 PM	0	0	0	0	0
5:45 PM	0	0	2	0	2
TOTAL VOLUMES:	2	1	3	0	6

Counts Unlimited
P.O. Box 1178
Corona, CA 92878
(951) 268-6268

Counts Unlimited
PO Box 1178
Corona, CA 92878
(951) 268-6268

City of Irwindale
N/S: Stewart Avenue
E/W: Live Oak Avenue
Weather: Clear

File Name : 10_IRW_St Lo AM
Site Code : 05117783
Start Date : 11/28/2017
Page No : 1

Groups Printed- Passenger Vehicles - Large 2 Axle Vehicles - 3 Axle Vehicles - 4+ Axle Trucks

	Stewart Avenue Southbound					Live Oak Avenue Westbound					Stewart Avenue Northbound					Live Oak Avenue Eastbound							
Start Time	Left	Thru	Right	RTOR	App. Total	Left	Thru	Right	RTOR	App. Total	Left	Thru	Right	RTOR	App. Total	Left	Thru	Right	RTOR	App. Total	Exclu. Total	Inclu. Total	Int. Total
07:00 AM	3	6	21	2	30	5	443	4	0	452	66	27	6	0	99	1	114	3	1	118	3	699	702
07:15 AM	2	7	5	2	14	3	397	7	3	407	65	25	6	0	96	1	125	3	0	129	5	646	651
07:30 AM	2	11	9	4	22	4	320	6	1	330	59	30	10	3	99	3	160	11	3	174	11	625	636
07:45 AM	3	11	14	3	28	11	290	9	3	310	49	30	6	0	85	7	210	8	2	225	8	648	656
Total	10	35	49	11	94	23	1450	26	7	1499	239	112	28	3	379	12	609	25	6	646	27	2618	2645
08:00 AM	1	12	15	8	28	7	277	6	3	290	40	21	8	3	69	3	173	9	1	185	15	572	587
08:15 AM	6	13	14	1	33	5	270	4	1	279	40	15	7	3	62	6	158	7	0	171	5	545	550
08:30 AM	2	6	13	5	21	7	210	3	0	220	23	13	3	1	39	1	159	13	1	173	7	453	460
08:45 AM	4	3	11	8	18	5	216	3	0	224	26	10	6	3	42	8	165	8	1	181	12	465	477
Total	13	34	53	22	100	24	973	16	4	1013	129	59	24	10	212	18	655	37	3	710	39	2035	2074
Grand Total	23	69	102	33	194	47	2423	42	11	2512	368	171	52	13	591	30	1264	62	9	1356	66	4653	4719
Apprch %	11.9	35.6	52.6			1.9	96.5	1.7			62.3	28.9	8.8			2.2	93.2	4.6					
Total %	0.5	1.5	2.2		4.2	1	52.1	0.9		54	7.9	3.7	1.1		12.7	0.6	27.2	1.3		29.1	1.4	98.6	
Passenger Vehicles	15	65	99		211	43	2180	38		2272	356	169	47		584	26	1049	57		1141	0	0	4208
% Passenger Vehicles	65.2	94.2	97.1	97	93	91.5	90	90.5	100	90.1	96.7	98.8	90.4	92.3	96.7	86.7	83	91.9	100	83.6	0	0	89.2
Large 2 Axle Vehicles	7	1	2		10	3	92	4		99	10	0	3		13	2	63	4		69	0	0	191
% Large 2 Axle Vehicles	30.4	1.4	2	0	4.4	6.4	3.8	9.5	0	3.9	2.7	0	5.8	0	2.2	6.7	5	6.5	0	5.1	0	0	4
3 Axle Vehicles	0	3	1		5	1	39	0		40	1	2	2		6	2	26	0		28	0	0	79
% 3 Axle Vehicles	0	4.3	1	3	2.2	2.1	1.6	0	0	1.6	0.3	1.2	3.8	7.7	1	6.7	2.1	0	0	2.1	0	0	1.7
4+ Axle Trucks	1	0	0		1	0	112	0		112	1	0	0		1	0	126	1		127	0	0	241
% 4+ Axle Trucks	4.3	0	0	0	0.4	0	4.6	0	0	4.4	0.3	0	0	0	0.2	0	10	1.6	0	9.3	0	0	5.1

	Stewart Avenue Southbound				Live Oak Avenue Westbound				Stewart Avenue Northbound				Live Oak Avenue Eastbound				
Start Time	Left	Thru	Right	App. Total	Left	Thru	Right	App. Total	Left	Thru	Right	App. Total	Left	Thru	Right	App. Total	Int. Total
Peak Hour Analysis From 07:00 AM to 08:45 AM - Peak 1 of 1																	
Peak Hour for Entire Intersection Begins at 07:00 AM																	
07:00 AM	**3**	6	**21**	**30**	5	**443**	4	**452**	**66**	27	6	**99**	1	114	3	118	**699**
07:15 AM	2	7	5	14	3	397	7	407	65	25	6	96	1	125	3	129	646
07:30 AM	2	**11**	9	22	4	320	6	330	59	**30**	**10**	99	3	160	**11**	174	625
07:45 AM	3	11	14	28	**11**	290	**9**	310	49	30	6	85	**7**	**210**	8	**225**	648
Total Volume	10	35	49	94	23	1450	26	1499	239	112	28	379	12	609	25	646	2618
% App. Total	10.6	37.2	52.1		1.5	96.7	1.7		63.1	29.6	7.4		1.9	94.3	3.9		
PHF	.833	.795	.583	.783	.523	.818	.722	.829	.905	.933	.700	.957	.429	.725	.568	.718	.936

Counts Unlimited
PO Box 1178
Corona, CA 92878
(951) 268-6268

City of Irwindale
N/S: Stewart Avenue
E/W: Live Oak Avenue
Weather: Clear

File Name : 10_IRW_St Lo AM
Site Code : 05117783
Start Date : 11/28/2017
Page No : 2

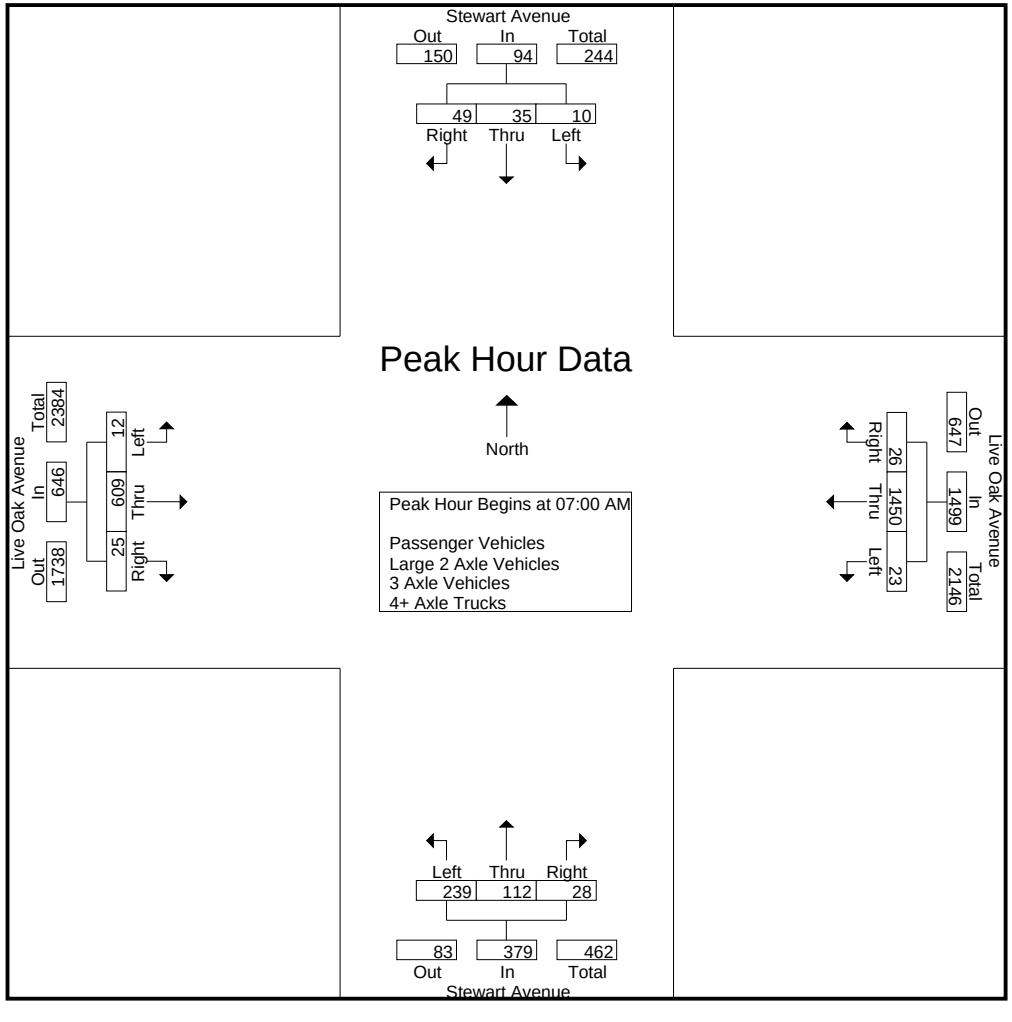

Counts Unlimited
PO Box 1178
Corona, CA 92878
(951) 268-6268

City of Irwindale
N/S: Stewart Avenue
E/W: Live Oak Avenue
Weather: Clear

File Name : 10_IRW_St Lo AM
Site Code : 05117783
Start Date : 11/28/2017
Page No : 3

	Stewart Avenue Southbound				Live Oak Avenue Westbound				Stewart Avenue Northbound				Live Oak Avenue Eastbound				
Start Time	Left	Thru	Right	App. Total	Left	Thru	Right	App. Total	Left	Thru	Right	App. Total	Left	Thru	Right	App. Total	Int. Total
Peak Hour Analysis From 07:00 AM to 08:45 AM - Peak 1 of 1																	
Peak Hour for Each Approach Begins at:																	
	07:30 AM				07:00 AM				07:00 AM				07:30 AM				
+0 mins.	2	11	9	22	5	**443**	4	**452**	**66**	27	6	**99**	3	160	**11**	174	
+15 mins.	3	11	14	28	3	397	7	407	65	25	6	96	**7**	**210**	8	**225**	
+30 mins.	1	12	**15**	28	4	320	6	330	59	**30**	**10**	99	3	173	9	185	
+45 mins.	**6**	**13**	14	**33**	**11**	290	**9**	310	49	30	6	85	6	158	7	171	
Total Volume	12	47	52	111	23	1450	26	1499	239	112	28	379	19	701	35	755	
% App. Total	10.8	42.3	46.8		1.5	96.7	1.7		63.1	29.6	7.4		2.5	92.8	4.6		
PHF	.500	.904	.867	.841	.523	.818	.722	.829	.905	.933	.700	.957	.679	.835	.795	.839	

Counts Unlimited
PO Box 1178
Corona, CA 92878
(951) 268-6268

City of Irwindale
N/S: Stewart Avenue
E/W: Live Oak Avenue
Weather: Clear

File Name : 10_IRW_St Lo AM
Site Code : 05117783
Start Date : 11/28/2017
Page No : 1

Groups Printed- Passenger Vehicles

	Stewart Avenue Southbound					Live Oak Avenue Westbound					Stewart Avenue Northbound					Live Oak Avenue Eastbound							
Start Time	Left	Thru	Right	RTOR	App. Total	Left	Thru	Right	RTOR	App. Total	Left	Thru	Right	RTOR	App. Total	Left	Thru	Right	RTOR	App. Total	Exclu. Total	Inclu. Total	Int. Total
07:00 AM	1	6	21	2	28	4	418	3	0	425	66	27	5	0	98	1	92	2	1	95	3	646	649
07:15 AM	1	7	5	2	13	3	359	6	3	368	63	25	6	0	94	1	99	2	0	102	5	577	582
07:30 AM	2	11	9	4	22	4	295	6	1	305	57	29	10	3	96	3	134	11	3	148	11	571	582
07:45 AM	1	11	13	3	25	11	265	9	3	285	47	30	5	0	82	5	188	8	2	201	8	593	601
Total	5	35	48	11	88	22	1337	24	7	1383	233	111	26	3	370	10	513	23	6	546	27	2387	2414
08:00 AM	1	10	15	8	26	7	252	5	3	264	38	20	8	3	66	3	144	7	1	154	15	510	525
08:15 AM	4	12	13	1	29	4	232	4	1	240	39	15	5	3	59	6	126	7	0	139	5	467	472
08:30 AM	2	5	12	4	19	6	180	2	0	188	21	13	3	1	37	1	124	12	1	137	6	381	387
08:45 AM	3	3	11	8	17	4	179	3	0	186	25	10	5	2	40	6	142	8	1	156	11	399	410
Total	10	30	51	21	91	21	843	14	4	878	123	58	21	9	202	16	536	34	3	586	37	1757	1794
Grand Total	15	65	99	32	179	43	2180	38	11	2261	356	169	47	12	572	26	1049	57	9	1132	64	4144	4208
Apprch %	8.4	36.3	55.3			1.9	96.4	1.7			62.2	29.5	8.2			2.3	92.7	5					
Total %	0.4	1.6	2.4		4.3	1	52.6	0.9		54.6	8.6	4.1	1.1		13.8	0.6	25.3	1.4		27.3	1.5	98.5	

	Stewart Avenue Southbound				Live Oak Avenue Westbound				Stewart Avenue Northbound				Live Oak Avenue Eastbound				
Start Time	Left	Thru	Right	App. Total	Left	Thru	Right	App. Total	Left	Thru	Right	App. Total	Left	Thru	Right	App. Total	Int. Total
Peak Hour Analysis From 07:00 AM to 07:45 AM - Peak 1 of 1																	
Peak Hour for Entire Intersection Begins at 07:00 AM																	
07:00 AM	1	6	**21**	**28**	4	**418**	3	**425**	**66**	27	5	**98**	1	92	2	95	**646**
07:15 AM	1	7	5	13	3	359	6	368	63	25	6	94	1	99	2	102	577
07:30 AM	**2**	**11**	9	22	4	295	6	305	57	29	**10**	96	3	134	**11**	148	571
07:45 AM	1	11	13	25	**11**	265	**9**	285	47	**30**	5	82	**5**	**188**	8	**201**	593
Total Volume	5	35	48	88	22	1337	24	1383	233	111	26	370	10	513	23	546	2387
% App. Total	5.7	39.8	54.5		1.6	96.7	1.7		63	30	7		1.8	94	4.2		
PHF	.625	.795	.571	.786	.500	.800	.667	.814	.883	.925	.650	.944	.500	.682	.523	.679	.924

Counts Unlimited
PO Box 1178
Corona, CA 92878
(951) 268-6268

City of Irwindale
N/S: Stewart Avenue
E/W: Live Oak Avenue
Weather: Clear

File Name : 10_IRW_St Lo AM
Site Code : 05117783
Start Date : 11/28/2017
Page No : 2

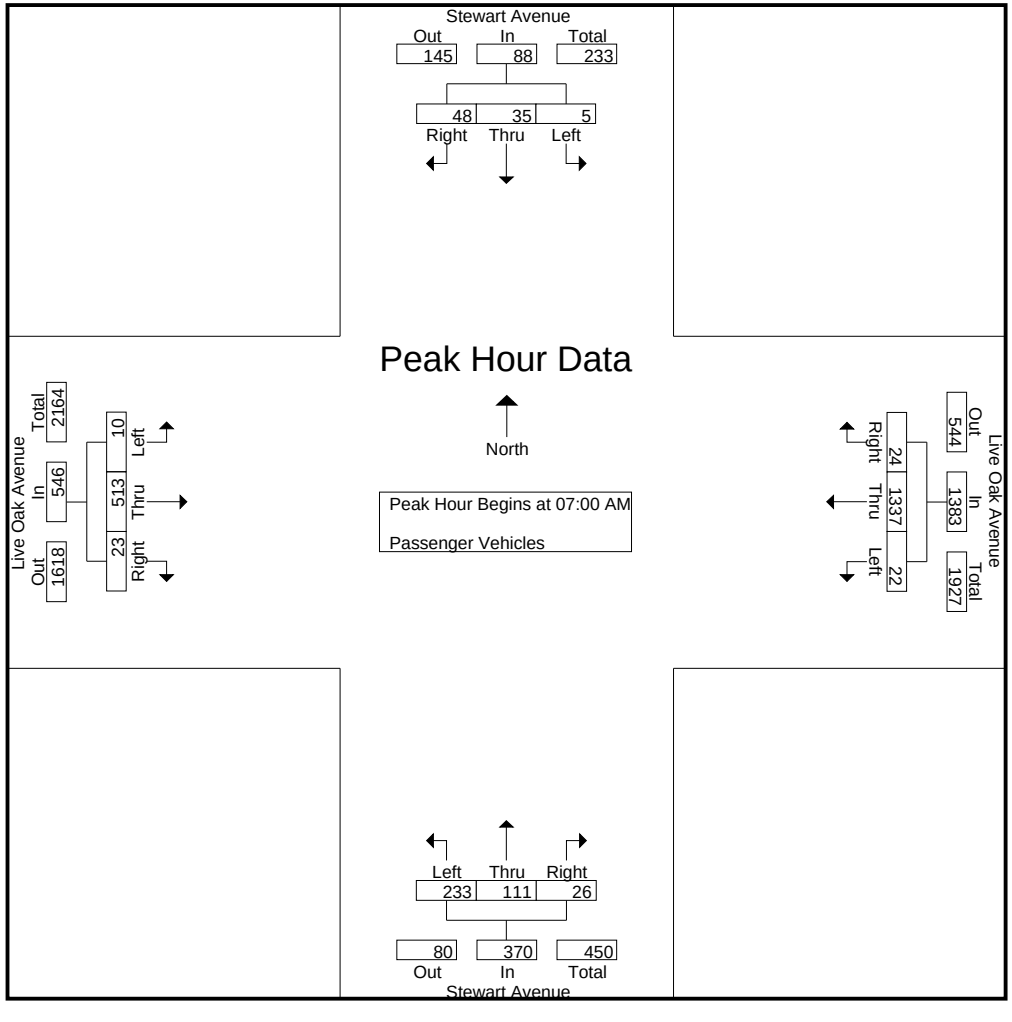

Counts Unlimited
PO Box 1178
Corona, CA 92878
(951) 268-6268

City of Irwindale
N/S: Stewart Avenue
E/W: Live Oak Avenue
Weather: Clear

File Name : 10_IRW_St Lo AM
Site Code : 05117783
Start Date : 11/28/2017
Page No : 3

	Stewart Avenue Southbound				Live Oak Avenue Westbound				Stewart Avenue Northbound				Live Oak Avenue Eastbound				
Start Time	Left	Thru	Right	App. Total	Left	Thru	Right	App. Total	Left	Thru	Right	App. Total	Left	Thru	Right	App. Total	Int. Total
Peak Hour Analysis From 07:00 AM to 07:45 AM - Peak 1 of 1																	
Peak Hour for Each Approach Begins at:																	
	07:00 AM				07:00 AM				07:00 AM				07:00 AM				
+0 mins.	1	6	**21**	**28**	4	**418**	3	**425**	**66**	27	5	**98**	1	92	2	95	
+15 mins.	1	7	5	13	3	359	6	368	63	25	6	94	1	99	2	102	
+30 mins.	**2**	**11**	9	22	4	295	6	305	57	29	**10**	96	3	134	**11**	148	
+45 mins.	1	11	13	25	**11**	265	**9**	285	47	**30**	5	82	**5**	**188**	8	**201**	
Total Volume	5	35	48	88	22	1337	24	1383	233	111	26	370	10	513	23	546	
% App. Total	5.7	39.8	54.5		1.6	96.7	1.7		63	30	7		1.8	94	4.2		
PHF	.625	.795	.571	.786	.500	.800	.667	.814	.883	.925	.650	.944	.500	.682	.523	.679	

Counts Unlimited
PO Box 1178
Corona, CA 92878
(951) 268-6268

City of Irwindale
N/S: Stewart Avenue
E/W: Live Oak Avenue
Weather: Clear

File Name : 10_IRW_St Lo AM
Site Code : 05117783
Start Date : 11/28/2017
Page No : 1

Groups Printed- Large 2 Axle Vehicles

	Stewart Avenue Southbound					Live Oak Avenue Westbound					Stewart Avenue Northbound					Live Oak Avenue Eastbound							
Start Time	Left	Thru	Right	RTOR	App. Total	Left	Thru	Right	RTOR	App. Total	Left	Thru	Right	RTOR	App. Total	Left	Thru	Right	RTOR	App. Total	Exclu. Total	Inclu. Total	Int. Total
07:00 AM	2	0	0	0	2	1	14	1	0	16	0	0	1	0	1	0	8	0	0	8	0	27	27
07:15 AM	1	0	0	0	1	0	21	1	0	22	2	0	0	0	2	0	8	1	0	9	0	34	34
07:30 AM	0	0	0	0	0	0	12	0	0	12	2	0	0	0	2	0	9	0	0	9	0	23	23
07:45 AM	2	0	1	0	3	0	11	0	0	11	2	0	1	0	3	1	5	0	0	6	0	23	23
Total	5	0	1	0	6	1	58	2	0	61	6	0	2	0	8	1	30	1	0	32	0	107	107
08:00 AM	0	0	0	0	0	0	11	1	0	12	2	0	0	0	2	0	7	2	0	9	0	23	23
08:15 AM	2	1	1	0	4	1	9	0	0	10	0	0	1	0	1	0	6	0	0	6	0	21	21
08:30 AM	0	0	0	0	0	1	6	1	0	8	1	0	0	0	1	0	12	1	0	13	0	22	22
08:45 AM	0	0	0	0	0	0	8	0	0	8	1	0	0	0	1	1	8	0	0	9	0	18	18
Total	2	1	1	0	4	2	34	2	0	38	4	0	1	0	5	1	33	3	0	37	0	84	84
Grand Total	7	1	2	0	10	3	92	4	0	99	10	0	3	0	13	2	63	4	0	69	0	191	191
Apprch %	70	10	20			3	92.9	4			76.9	0	23.1			2.9	91.3	5.8					
Total %	3.7	0.5	1		5.2	1.6	48.2	2.1		51.8	5.2	0	1.6		6.8	1	33	2.1		36.1	0	100	

	Stewart Avenue Southbound				Live Oak Avenue Westbound				Stewart Avenue Northbound				Live Oak Avenue Eastbound				
Start Time	Left	Thru	Right	App. Total	Left	Thru	Right	App. Total	Left	Thru	Right	App. Total	Left	Thru	Right	App. Total	Int. Total
Peak Hour Analysis From 07:00 AM to 07:45 AM - Peak 1 of 1																	
Peak Hour for Entire Intersection Begins at 07:00 AM																	
07:00 AM	**2**	0	0	2	**1**	14	**1**	16	0	0	**1**	1	0	8	0	8	27
07:15 AM	1	0	0	1	0	**21**	1	**22**	**2**	0	0	2	0	8	**1**	**9**	**34**
07:30 AM	0	0	0	0	0	12	0	12	2	0	0	2	0	**9**	0	9	23
07:45 AM	2	0	**1**	**3**	0	11	0	11	2	0	1	**3**	**1**	5	0	6	23
Total Volume	5	0	1	6	1	58	2	61	6	0	2	8	1	30	1	32	107
% App. Total	83.3	0	16.7		1.6	95.1	3.3		75	0	25		3.1	93.8	3.1		
PHF	.625	.000	.250	.500	.250	.690	.500	.693	.750	.000	.500	.667	.250	.833	.250	.889	.787

Counts Unlimited
PO Box 1178
Corona, CA 92878
(951) 268-6268

City of Irwindale
N/S: Stewart Avenue
E/W: Live Oak Avenue
Weather: Clear

File Name : 10_IRW_St Lo AM
Site Code : 05117783
Start Date : 11/28/2017
Page No : 2

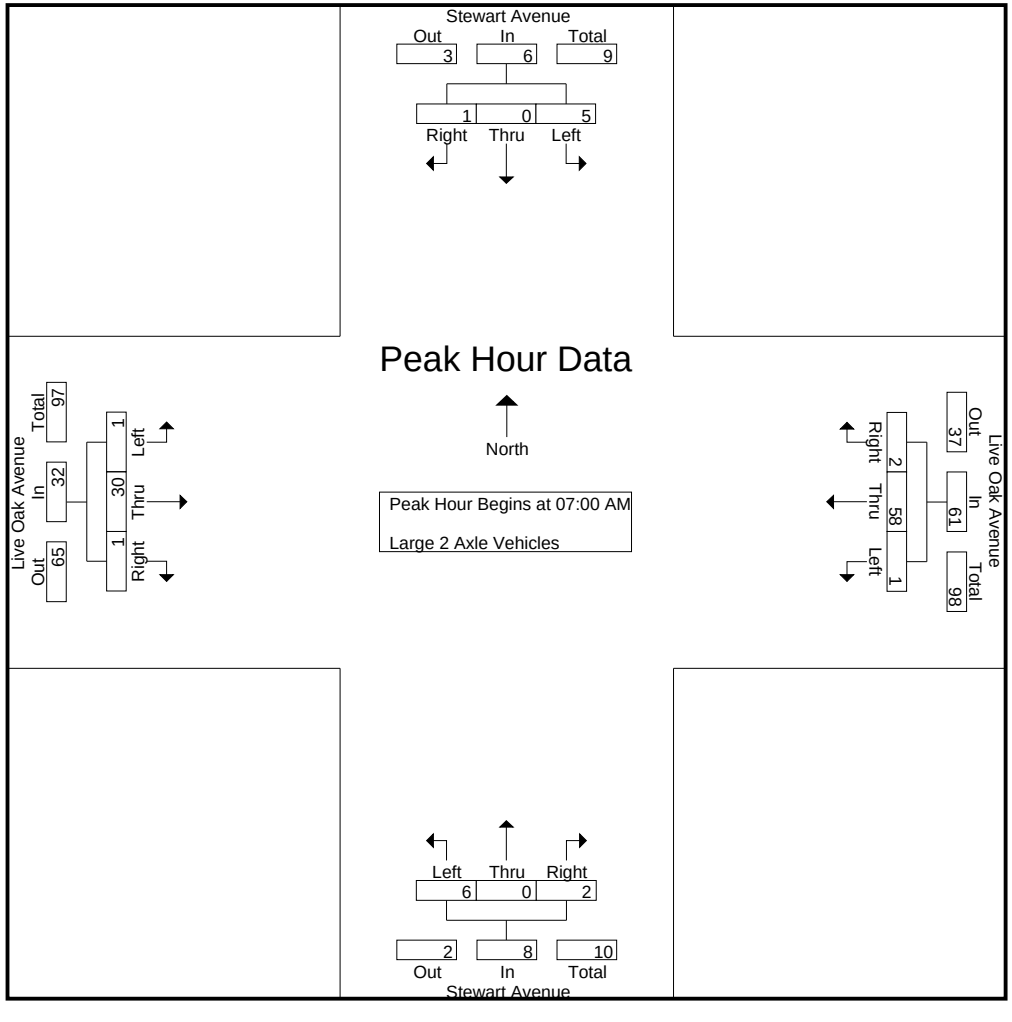

Counts Unlimited
PO Box 1178
Corona, CA 92878
(951) 268-6268

City of Irwindale
N/S: Stewart Avenue
E/W: Live Oak Avenue
Weather: Clear

File Name : 10_IRW_St Lo AM
Site Code : 05117783
Start Date : 11/28/2017
Page No : 3

	Stewart Avenue Southbound				Live Oak Avenue Westbound				Stewart Avenue Northbound				Live Oak Avenue Eastbound				
Start Time	Left	Thru	Right	App. Total	Left	Thru	Right	App. Total	Left	Thru	Right	App. Total	Left	Thru	Right	App. Total	Int. Total
Peak Hour Analysis From 07:00 AM to 07:45 AM - Peak 1 of 1																	
Peak Hour for Each Approach Begins at:																	
	07:00 AM				07:00 AM				07:00 AM				07:00 AM				
+0 mins.	**2**	0	0	2	**1**	14	**1**	16	0	0	**1**	1	0	8	0	8	
+15 mins.	1	0	0	1	0	**21**	1	**22**	**2**	0	0	2	0	8	**1**	**9**	
+30 mins.	0	0	0	0	0	12	0	12	2	0	0	2	0	**9**	0	9	
+45 mins.	2	0	**1**	**3**	0	11	0	11	2	0	1	**3**	**1**	5	0	6	
Total Volume	5	0	1	6	1	58	2	61	6	0	2	8	1	30	1	32	
% App. Total	83.3	0	16.7		1.6	95.1	3.3		75	0	25		3.1	93.8	3.1		
PHF	.625	.000	.250	.500	.250	.690	.500	.693	.750	.000	.500	.667	.250	.833	.250	.889	

Counts Unlimited
PO Box 1178
Corona, CA 92878
(951) 268-6268

City of Irwindale
N/S: Stewart Avenue
E/W: Live Oak Avenue
Weather: Clear

File Name : 10_IRW_St Lo AM
Site Code : 05117783
Start Date : 11/28/2017
Page No : 1

Groups Printed- 3 Axle Vehicles

	Stewart Avenue Southbound					Live Oak Avenue Westbound					Stewart Avenue Northbound					Live Oak Avenue Eastbound							
Start Time	Left	Thru	Right	RTOR	App. Total	Left	Thru	Right	RTOR	App. Total	Left	Thru	Right	RTOR	App. Total	Left	Thru	Right	RTOR	App. Total	Exclu. Total	Inclu. Total	Int. Total
07:00 AM	0	0	0	0	0	0	7	0	0	7	0	0	0	0	0	0	3	0	0	3	0	10	10
07:15 AM	0	0	0	0	0	0	7	0	0	7	0	0	0	0	0	0	6	0	0	6	0	13	13
07:30 AM	0	0	0	0	0	0	5	0	0	5	0	1	0	0	1	0	2	0	0	2	0	8	8
07:45 AM	0	0	0	0	0	0	1	0	0	1	0	0	0	0	0	1	3	0	0	4	0	5	5
Total	0	0	0	0	0	0	20	0	0	20	0	1	0	0	1	1	14	0	0	15	0	36	36
08:00 AM	0	2	0	0	2	0	4	0	0	4	0	1	0	0	1	0	1	0	0	1	0	8	8
08:15 AM	0	0	0	0	0	0	4	0	0	4	0	0	1	0	1	0	5	0	0	5	0	10	10
08:30 AM	0	1	1	1	2	0	4	0	0	4	1	0	0	0	1	0	5	0	0	5	1	12	13
08:45 AM	0	0	0	0	0	1	7	0	0	8	0	0	1	1	1	1	1	0	0	2	1	11	12
Total	0	3	1	1	4	1	19	0	0	20	1	1	2	1	4	1	12	0	0	13	2	41	43
Grand Total	0	3	1	1	4	1	39	0	0	40	1	2	2	1	5	2	26	0	0	28	2	77	79
Apprch %	0	75	25			2.5	97.5	0			20	40	40			7.1	92.9	0					
Total %	0	3.9	1.3		5.2	1.3	50.6	0		51.9	1.3	2.6	2.6		6.5	2.6	33.8	0		36.4	2.5	97.5	

	Stewart Avenue Southbound				Live Oak Avenue Westbound				Stewart Avenue Northbound				Live Oak Avenue Eastbound				
Start Time	Left	Thru	Right	App. Total	Left	Thru	Right	App. Total	Left	Thru	Right	App. Total	Left	Thru	Right	App. Total	Int. Total
Peak Hour Analysis From 07:00 AM to 07:45 AM - Peak 1 of 1																	
Peak Hour for Entire Intersection Begins at 07:00 AM																	
07:00 AM	0	0	0	0	0	**7**	0	**7**	0	0	0	0	0	3	0	3	10
07:15 AM	0	0	0	0	0	7	0	7	0	0	0	0	0	**6**	0	**6**	**13**
07:30 AM	0	0	0	0	0	5	0	5	0	**1**	0	**1**	0	2	0	2	8
07:45 AM	0	0	0	0	0	1	0	1	0	0	0	0	**1**	3	0	4	5
Total Volume	0	0	0	0	0	20	0	20	0	1	0	1	1	14	0	15	36
% App. Total	0	0	0		0	100	0		0	100	0		6.7	93.3	0		
PHF	.000	.000	.000	.000	.000	.714	.000	.714	.000	.250	.000	.250	.250	.583	.000	.625	.692

Counts Unlimited
PO Box 1178
Corona, CA 92878
(951) 268-6268

City of Irwindale
N/S: Stewart Avenue
E/W: Live Oak Avenue
Weather: Clear

File Name : 10_IRW_St Lo AM
Site Code : 05117783
Start Date : 11/28/2017
Page No : 2

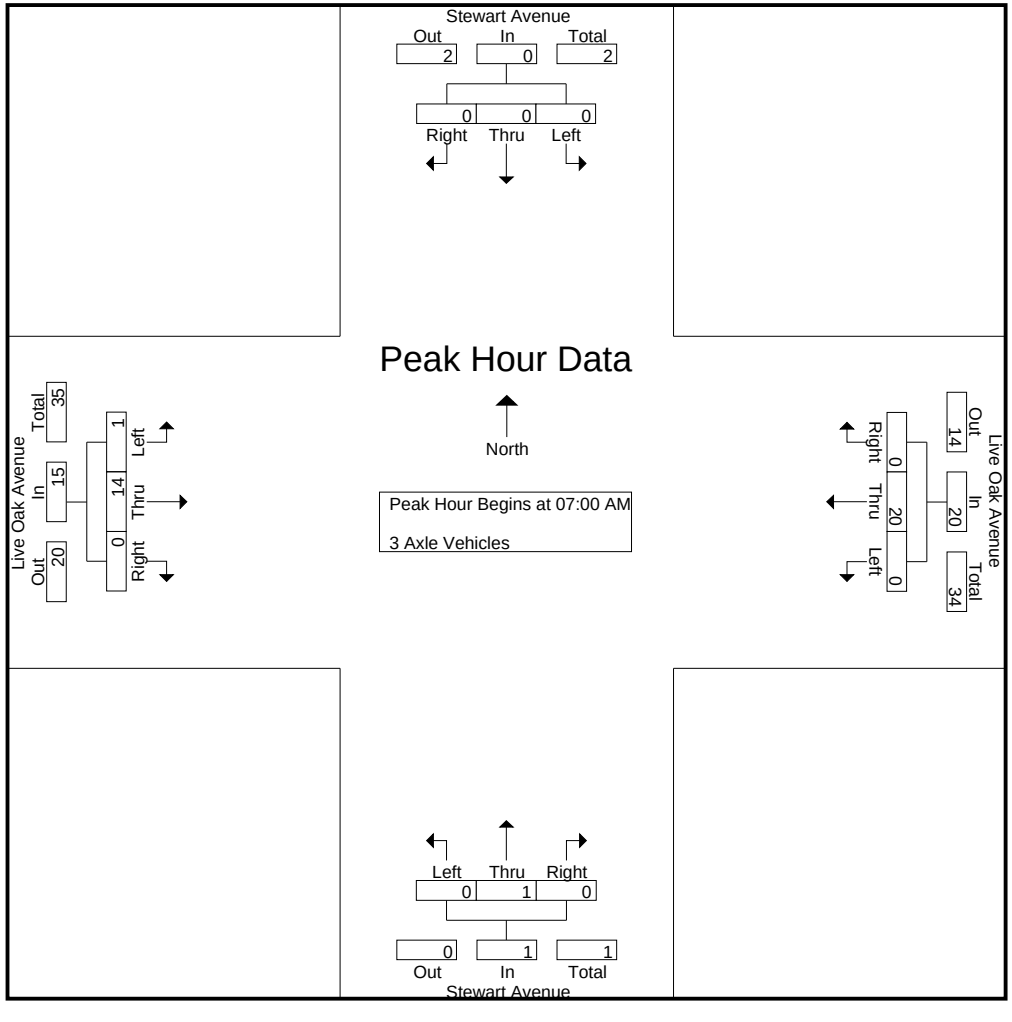

Counts Unlimited
PO Box 1178
Corona, CA 92878
(951) 268-6268

City of Irwindale
N/S: Stewart Avenue
E/W: Live Oak Avenue
Weather: Clear

File Name : 10_IRW_St Lo AM
Site Code : 05117783
Start Date : 11/28/2017
Page No : 3

	Stewart Avenue Southbound				Live Oak Avenue Westbound				Stewart Avenue Northbound				Live Oak Avenue Eastbound				
Start Time	Left	Thru	Right	App. Total	Left	Thru	Right	App. Total	Left	Thru	Right	App. Total	Left	Thru	Right	App. Total	Int. Total
Peak Hour Analysis From 07:00 AM to 07:45 AM - Peak 1 of 1																	
Peak Hour for Each Approach Begins at:																	
	07:00 AM				07:00 AM				07:00 AM				07:00 AM				
+0 mins.	0	0	0	0	0	**7**	0	**7**	0	0	0	0	0	3	0	3	
+15 mins.	0	0	0	0	0	7	0	7	0	0	0	0	0	**6**	0	**6**	
+30 mins.	0	0	0	0	0	5	0	5	0	**1**	0	**1**	0	2	0	2	
+45 mins.	0	0	0	0	0	1	0	1	0	0	0	0	**1**	3	0	4	
Total Volume	0	0	0	0	0	20	0	20	0	1	0	1	1	14	0	15	
% App. Total	0	0	0		0	100	0		0	100	0		6.7	93.3	0		
PHF	.000	.000	.000	.000	.000	.714	.000	.714	.000	.250	.000	.250	.250	.583	.000	.625	

Counts Unlimited
PO Box 1178
Corona, CA 92878
(951) 268-6268

City of Irwindale
N/S: Stewart Avenue
E/W: Live Oak Avenue
Weather: Clear

File Name : 10_IRW_St Lo AM
Site Code : 05117783
Start Date : 11/28/2017
Page No : 1

Groups Printed- 4+ Axle Trucks

	Stewart Avenue Southbound					Live Oak Avenue Westbound					Stewart Avenue Northbound					Live Oak Avenue Eastbound							
Start Time	Left	Thru	Right	RTOR	App. Total	Left	Thru	Right	RTOR	App. Total	Left	Thru	Right	RTOR	App. Total	Left	Thru	Right	RTOR	App. Total	Exclu. Total	Inclu. Total	Int. Total
07:00 AM	0	0	0	0	0	0	4	0	0	4	0	0	0	0	0	0	11	1	0	12	0	16	16
07:15 AM	0	0	0	0	0	0	10	0	0	10	0	0	0	0	0	0	12	0	0	12	0	22	22
07:30 AM	0	0	0	0	0	0	8	0	0	8	0	0	0	0	0	0	15	0	0	15	0	23	23
07:45 AM	0	0	0	0	0	0	13	0	0	13	0	0	0	0	0	0	14	0	0	14	0	27	27
Total	0	0	0	0	0	0	35	0	0	35	0	0	0	0	0	0	52	1	0	53	0	88	88
08:00 AM	0	0	0	0	0	0	10	0	0	10	0	0	0	0	0	0	21	0	0	21	0	31	31
08:15 AM	0	0	0	0	0	0	25	0	0	25	1	0	0	0	1	0	21	0	0	21	0	47	47
08:30 AM	0	0	0	0	0	0	20	0	0	20	0	0	0	0	0	0	18	0	0	18	0	38	38
08:45 AM	1	0	0	0	1	0	22	0	0	22	0	0	0	0	0	0	14	0	0	14	0	37	37
Total	1	0	0	0	1	0	77	0	0	77	1	0	0	0	1	0	74	0	0	74	0	153	153
Grand Total	1	0	0	0	1	0	112	0	0	112	1	0	0	0	1	0	126	1	0	127	0	241	241
Apprch %	100	0	0			0	100	0			100	0	0			0	99.2	0.8					
Total %	0.4	0	0		0.4	0	46.5	0		46.5	0.4	0	0		0.4	0	52.3	0.4		52.7	0	100	

	Stewart Avenue Southbound				Live Oak Avenue Westbound				Stewart Avenue Northbound				Live Oak Avenue Eastbound				
Start Time	Left	Thru	Right	App. Total	Left	Thru	Right	App. Total	Left	Thru	Right	App. Total	Left	Thru	Right	App. Total	Int. Total
Peak Hour Analysis From 07:00 AM to 07:45 AM - Peak 1 of 1																	
Peak Hour for Entire Intersection Begins at 07:00 AM																	
07:00 AM	0	0	0	0	0	4	0	4	0	0	0	0	0	11	**1**	12	16
07:15 AM	0	0	0	0	0	10	0	10	0	0	0	0	0	12	0	12	22
07:30 AM	0	0	0	0	0	8	0	8	0	0	0	0	0	**15**	0	**15**	23
07:45 AM	0	0	0	0	0	**13**	0	**13**	0	0	0	0	0	14	0	14	**27**
Total Volume	0	0	0	0	0	35	0	35	0	0	0	0	0	52	1	53	88
% App. Total	0	0	0		0	100	0		0	0	0		0	98.1	1.9		
PHF	.000	.000	.000	.000	.000	.673	.000	.673	.000	.000	.000	.000	.000	.867	.250	.883	.815

Counts Unlimited
PO Box 1178
Corona, CA 92878
(951) 268-6268

City of Irwindale
N/S: Stewart Avenue
E/W: Live Oak Avenue
Weather: Clear

File Name : 10_IRW_St Lo AM
Site Code : 05117783
Start Date : 11/28/2017
Page No : 2

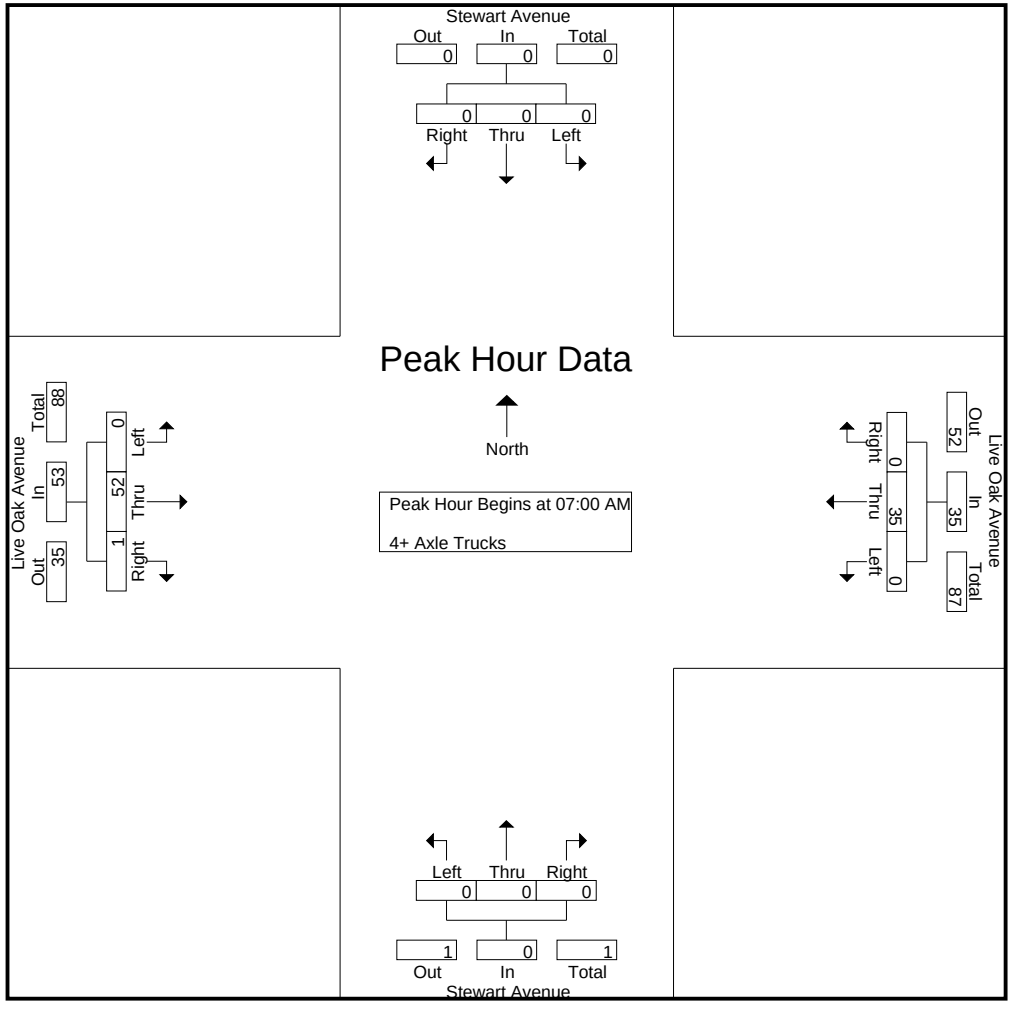

Counts Unlimited
PO Box 1178
Corona, CA 92878
(951) 268-6268

City of Irwindale
N/S: Stewart Avenue
E/W: Live Oak Avenue
Weather: Clear

File Name : 10_IRW_St Lo AM
Site Code : 05117783
Start Date : 11/28/2017
Page No : 3

	Stewart Avenue Southbound				Live Oak Avenue Westbound				Stewart Avenue Northbound				Live Oak Avenue Eastbound				
Start Time	Left	Thru	Right	App. Total	Left	Thru	Right	App. Total	Left	Thru	Right	App. Total	Left	Thru	Right	App. Total	Int. Total
Peak Hour Analysis From 07:00 AM to 07:45 AM - Peak 1 of 1																	
Peak Hour for Each Approach Begins at:																	
	07:00 AM				07:00 AM				07:00 AM				07:00 AM				
+0 mins.	0	0	0	0	0	4	0	4	0	0	0	0	0	11	**1**	12	
+15 mins.	0	0	0	0	0	10	0	10	0	0	0	0	0	12	0	12	
+30 mins.	0	0	0	0	0	8	0	8	0	0	0	0	0	**15**	0	**15**	
+45 mins.	0	0	0	0	0	**13**	0	**13**	0	0	0	0	0	14	0	14	
Total Volume	0	0	0	0	0	35	0	35	0	0	0	0	0	52	1	53	
% App. Total	0	0	0		0	100	0		0	0	0		0	98.1	1.9		
PHF	.000	.000	.000	.000	.000	.673	.000	.673	.000	.000	.000	.000	.000	.867	.250	.883	

Counts Unlimited
PO Box 1178
Corona, CA 92878
(951) 268-6268

City of Irwindale
N/S: Stewart Avenue
E/W: Live Oak Avenue
Weather: Clear

File Name : 10_IRW_St Lo PM
Site Code : 05117783
Start Date : 11/28/2017
Page No : 1

Groups Printed- Passenger Vehicles - Large 2 Axle Vehicles - 3 Axle Vehicles - 4+ Axle Trucks

	Stewart Avenue Southbound					Live Oak Avenue Westbound					Stewart Avenue Northbound					Live Oak Avenue Eastbound							
Start Time	Left	Thru	Right	RTOR	App. Total	Left	Thru	Right	RTOR	App. Total	Left	Thru	Right	RTOR	App. Total	Left	Thru	Right	RTOR	App. Total	Exclu. Total	Inclu. Total	Int. Total
04:00 PM	7	18	4	2	29	10	184	3	0	197	15	10	2	0	27	2	384	47	5	433	7	686	693
04:15 PM	5	22	5	3	32	8	156	3	0	167	10	4	6	0	20	4	360	42	14	406	17	625	642
04:30 PM	5	18	1	1	24	10	177	4	0	191	14	7	5	0	26	5	418	77	13	500	14	741	755
04:45 PM	4	39	2	0	45	5	171	2	1	178	11	9	3	0	23	7	420	55	15	482	16	728	744
Total	21	97	12	6	130	33	688	12	1	733	50	30	16	0	96	18	1582	221	47	1821	54	2780	2834
05:00 PM	7	23	2	2	32	6	188	2	0	196	11	9	2	0	22	12	429	88	17	529	19	779	798
05:15 PM	11	41	3	2	55	8	176	1	1	185	9	8	1	0	18	3	425	90	25	518	28	776	804
05:30 PM	10	26	2	2	38	8	180	5	0	193	21	5	1	0	27	15	401	64	22	480	24	738	762
05:45 PM	4	19	0	0	23	9	148	1	0	158	12	5	3	0	20	8	465	60	22	533	22	734	756
Total	32	109	7	6	148	31	692	9	1	732	53	27	7	0	87	38	1720	302	86	2060	93	3027	3120
Grand Total	53	206	19	12	278	64	1380	21	2	1465	103	57	23	0	183	56	3302	523	133	3881	147	5807	5954
Apprch %	19.1	74.1	6.8			4.4	94.2	1.4			56.3	31.1	12.6			1.4	85.1	13.5					
Total %	0.9	3.5	0.3		4.8	1.1	23.8	0.4		25.2	1.8	1	0.4		3.2	1	56.9	9		66.8	2.5	97.5	
Passenger Vehicles	47	192	12		260	57	1288	17		1364	99	56	21		176	55	3166	513		3865	0	0	5665
% Passenger Vehicles	88.7	93.2	63.2	75	89.7	89.1	93.3	81	100	93	96.1	98.2	91.3	0	96.2	98.2	95.9	98.1	98.5	96.3	0	0	95.1
Large 2 Axle Vehicles	5	1	5		13	1	47	3		51	4	1	1		6	1	95	6		103	0	0	173
% Large 2 Axle Vehicles	9.4	0.5	26.3	16.7	4.5	1.6	3.4	14.3	0	3.5	3.9	1.8	4.3	0	3.3	1.8	2.9	1.1	0.8	2.6	0	0	2.9
3 Axle Vehicles	0	13	1		15	6	12	1		19	0	0	1		1	0	15	4		20	0	0	55
% 3 Axle Vehicles	0	6.3	5.3	8.3	5.2	9.4	0.9	4.8	0	1.3	0	0	4.3	0	0.5	0	0.5	0.8	0.8	0.5	0	0	0.9
4+ Axle Trucks	1	0	1		2	0	33	0		33	0	0	0		0	0	26	0		26	0	0	61
% 4+ Axle Trucks	1.9	0	5.3	0	0.7	0	2.4	0	0	2.2	0	0	0	0	0	0	0.8	0	0	0.6	0	0	1

	Stewart Avenue Southbound				Live Oak Avenue Westbound				Stewart Avenue Northbound				Live Oak Avenue Eastbound				
Start Time	Left	Thru	Right	App. Total	Left	Thru	Right	App. Total	Left	Thru	Right	App. Total	Left	Thru	Right	App. Total	Int. Total
Peak Hour Analysis From 04:00 PM to 05:45 PM - Peak 1 of 1																	
Peak Hour for Entire Intersection Begins at 05:00 PM																	
05:00 PM	7	23	2	32	6	**188**	2	**196**	11	**9**	2	22	12	429	88	529	**779**
05:15 PM	**11**	**41**	**3**	**55**	8	176	1	185	9	8	1	18	3	425	**90**	518	776
05:30 PM	10	26	2	38	8	180	**5**	193	**21**	5	1	**27**	**15**	401	64	480	738
05:45 PM	4	19	0	23	**9**	148	1	158	12	5	**3**	20	8	**465**	60	**533**	734
Total Volume	32	109	7	148	31	692	9	732	53	27	7	87	38	1720	302	2060	3027
% App. Total	21.6	73.6	4.7		4.2	94.5	1.2		60.9	31	8		1.8	83.5	14.7		
PHF	.727	.665	.583	.673	.861	.920	.450	.934	.631	.750	.583	.806	.633	.925	.839	.966	.971

Counts Unlimited
PO Box 1178
Corona, CA 92878
(951) 268-6268

City of Irwindale
N/S: Stewart Avenue
E/W: Live Oak Avenue
Weather: Clear

File Name : 10_IRW_St Lo PM
Site Code : 05117783
Start Date : 11/28/2017
Page No : 2

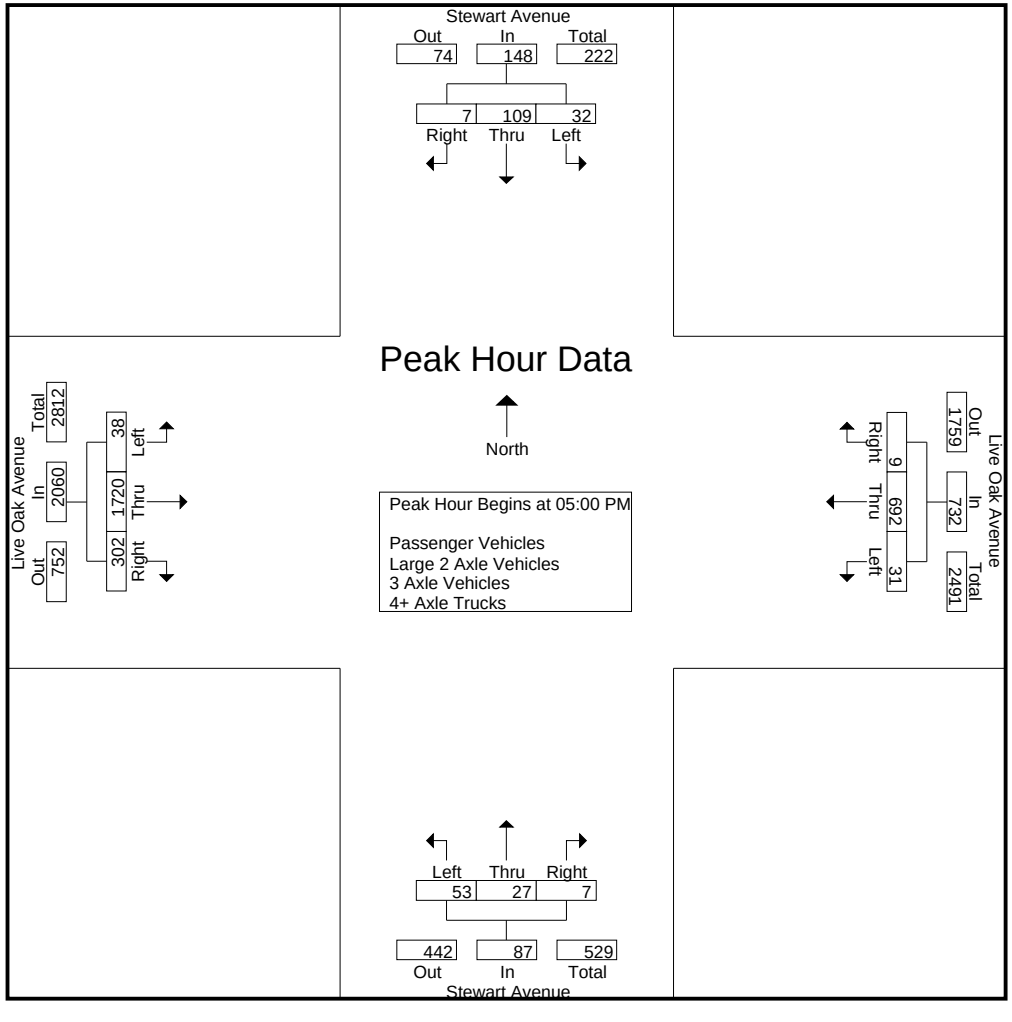

Counts Unlimited
PO Box 1178
Corona, CA 92878
(951) 268-6268

City of Irwindale
N/S: Stewart Avenue
E/W: Live Oak Avenue
Weather: Clear

File Name : 10_IRW_St Lo PM
Site Code : 05117783
Start Date : 11/28/2017

	Stewart Avenue Southbound				Live Oak Avenue Westbound				Stewart Avenue Northbound				Live Oak Avenue Eastbound				
Start Time	Left	Thru	Right	App. Total	Left	Thru	Right	App. Total	Left	Thru	Right	App. Total	Left	Thru	Right	App. Total	Int. Total
Peak Hour Analysis From 04:00 PM to 05:45 PM - Peak 1 of 1																	
Peak Hour for Each Approach Begins at:																	
	04:45 PM				04:45 PM				04:00 PM				05:00 PM				
+0 mins.	4	39	2	45	5	171	2	178	**15**	**10**	2	**27**	12	429	88	529	
+15 mins.	7	23	2	32	6	**188**	2	**196**	10	4	**6**	20	3	425	**90**	518	
+30 mins.	**11**	**41**	**3**	**55**	**8**	176	1	185	14	7	5	26	**15**	401	64	480	
+45 mins.	10	26	2	38	8	180	**5**	193	11	9	3	23	8	**465**	60	**533**	
Total Volume	32	129	9	170	27	715	10	752	50	30	16	96	38	1720	302	2060	
% App. Total	18.8	75.9	5.3		3.6	95.1	1.3		52.1	31.2	16.7		1.8	83.5	14.7		
PHF	.727	.787	.750	.773	.844	.951	.500	.959	.833	.750	.667	.889	.633	.925	.839	.966	

Counts Unlimited
PO Box 1178
Corona, CA 92878
(951) 268-6268

City of Irwindale
N/S: Stewart Avenue
E/W: Live Oak Avenue
Weather: Clear

File Name : 10_IRW_St Lo PM
Site Code : 05117783
Start Date : 11/28/2017
Page No : 1

Groups Printed- Passenger Vehicles

	Stewart Avenue Southbound					Live Oak Avenue Westbound					Stewart Avenue Northbound					Live Oak Avenue Eastbound							
Start Time	Left	Thru	Right	RTOR	App. Total	Left	Thru	Right	RTOR	App. Total	Left	Thru	Right	RTOR	App. Total	Left	Thru	Right	RTOR	App. Total	Exclu. Total	Inclu. Total	Int. Total
04:00 PM	6	17	2	2	25	8	161	3	0	172	15	9	1	0	25	2	354	45	5	401	7	623	630
04:15 PM	4	21	2	1	27	6	139	2	0	147	9	4	6	0	19	4	342	40	14	386	15	579	594
04:30 PM	5	16	1	1	22	9	165	3	0	177	13	7	5	0	25	5	396	75	12	476	13	700	713
04:45 PM	4	34	1	0	39	5	157	1	1	163	10	9	2	0	21	7	400	55	15	462	16	685	701
Total	19	88	6	4	113	28	622	9	1	659	47	29	14	0	90	18	1492	215	46	1725	51	2587	2638
05:00 PM	7	23	2	2	32	6	179	2	0	187	10	9	2	0	21	11	419	87	17	517	19	757	776
05:15 PM	9	37	2	1	48	6	171	1	1	178	9	8	1	0	18	3	412	88	24	503	26	747	773
05:30 PM	9	25	2	2	36	8	175	4	0	187	21	5	1	0	27	15	387	64	22	466	24	716	740
05:45 PM	3	19	0	0	22	9	141	1	0	151	12	5	3	0	20	8	456	59	22	523	22	716	738
Total	28	104	6	5	138	29	666	8	1	703	52	27	7	0	86	37	1674	298	85	2009	91	2936	3027
Grand Total	47	192	12	9	251	57	1288	17	2	1362	99	56	21	0	176	55	3166	513	131	3734	142	5523	5665
Apprch %	18.7	76.5	4.8			4.2	94.6	1.2			56.2	31.8	11.9			1.5	84.8	13.7					
Total %	0.9	3.5	0.2		4.5	1	23.3	0.3		24.7	1.8	1	0.4		3.2	1	57.3	9.3		67.6	2.5	97.5	

	Stewart Avenue Southbound				Live Oak Avenue Westbound				Stewart Avenue Northbound				Live Oak Avenue Eastbound				
Start Time	Left	Thru	Right	App. Total	Left	Thru	Right	App. Total	Left	Thru	Right	App. Total	Left	Thru	Right	App. Total	Int. Total
Peak Hour Analysis From 05:00 PM to 05:45 PM - Peak 1 of 1																	
Peak Hour for Entire Intersection Begins at 05:00 PM																	
05:00 PM	7	23	**2**	32	6	**179**	2	**187**	10	**9**	2	21	11	419	87	517	**757**
05:15 PM	**9**	**37**	2	**48**	6	171	1	178	9	8	1	18	3	412	**88**	503	747
05:30 PM	9	25	2	36	8	175	**4**	187	**21**	5	1	**27**	**15**	387	64	466	716
05:45 PM	3	19	0	22	**9**	141	1	151	12	5	**3**	20	8	**456**	59	**523**	716
Total Volume	28	104	6	138	29	666	8	703	52	27	7	86	37	1674	298	2009	2936
% App. Total	20.3	75.4	4.3		4.1	94.7	1.1		60.5	31.4	8.1		1.8	83.3	14.8		
PHF	.778	.703	.750	.719	.806	.930	.500	.940	.619	.750	.583	.796	.617	.918	.847	.960	.970

Counts Unlimited
PO Box 1178
Corona, CA 92878
(951) 268-6268

City of Irwindale
N/S: Stewart Avenue
E/W: Live Oak Avenue
Weather: Clear

File Name : 10_IRW_St Lo PM
Site Code : 05117783
Start Date : 11/28/2017
Page No : 2

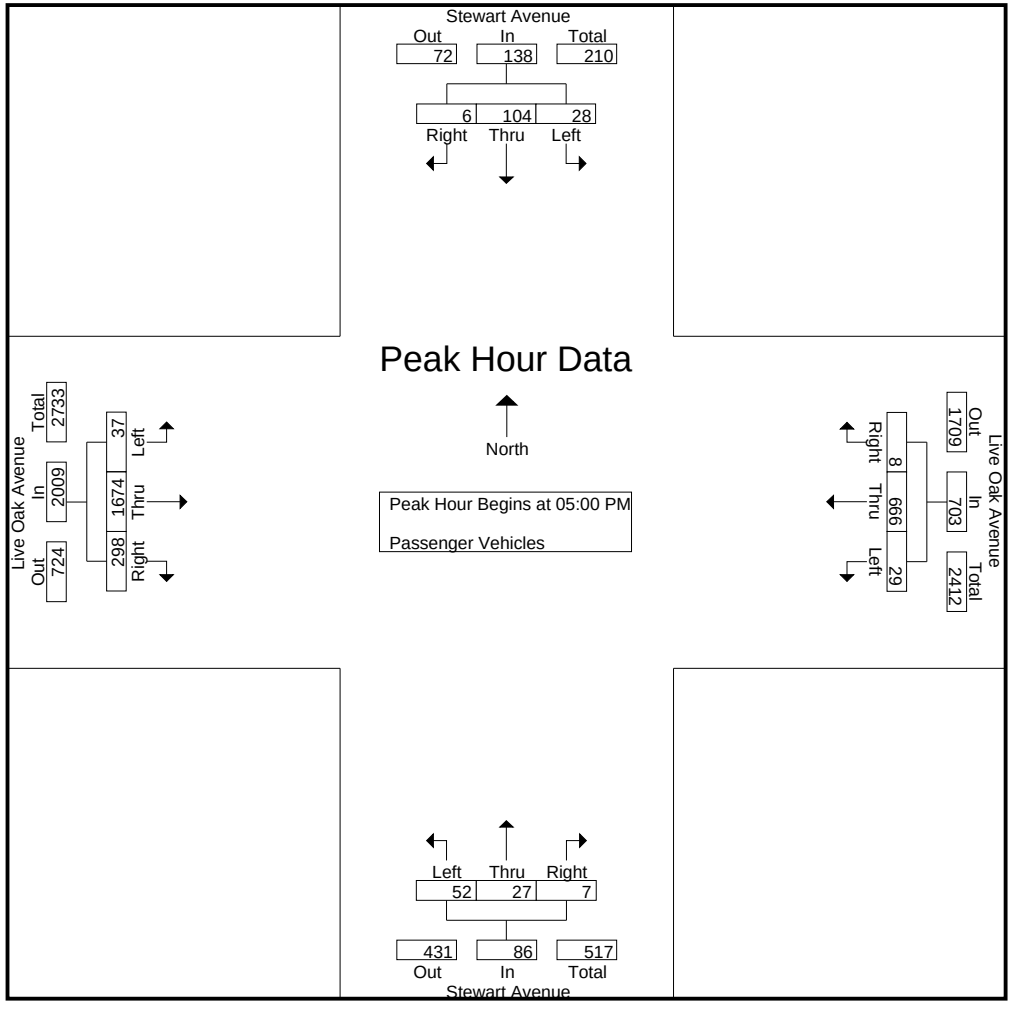

Counts Unlimited
PO Box 1178
Corona, CA 92878
(951) 268-6268

City of Irwindale
N/S: Stewart Avenue
E/W: Live Oak Avenue
Weather: Clear

File Name : 10_IRW_St Lo PM
Site Code : 05117783
Start Date : 11/28/2017

	Stewart Avenue Southbound				Live Oak Avenue Westbound				Stewart Avenue Northbound				Live Oak Avenue Eastbound				
Start Time	Left	Thru	Right	App. Total	Left	Thru	Right	App. Total	Left	Thru	Right	App. Total	Left	Thru	Right	App. Total	Int. Total
Peak Hour Analysis From 05:00 PM to 05:45 PM - Peak 1 of 1																	
Peak Hour for Each Approach Begins at:																	
	05:00 PM				05:00 PM				05:00 PM				05:00 PM				
+0 mins.	7	23	**2**	32	6	**179**	2	**187**	10	**9**	2	21	11	419	87	517	
+15 mins.	**9**	**37**	2	**48**	6	171	1	178	9	8	1	18	3	412	**88**	503	
+30 mins.	9	25	2	36	8	175	**4**	187	**21**	5	1	**27**	**15**	387	64	466	
+45 mins.	3	19	0	22	**9**	141	1	151	12	5	**3**	20	8	**456**	59	**523**	
Total Volume	28	104	6	138	29	666	8	703	52	27	7	86	37	1674	298	2009	
% App. Total	20.3	75.4	4.3		4.1	94.7	1.1		60.5	31.4	8.1		1.8	83.3	14.8		
PHF	.778	.703	.750	.719	.806	.930	.500	.940	.619	.750	.583	.796	.617	.918	.847	.960	

Counts Unlimited
PO Box 1178
Corona, CA 92878
(951) 268-6268

City of Irwindale
N/S: Stewart Avenue
E/W: Live Oak Avenue
Weather: Clear

File Name : 10_IRW_St Lo PM
Site Code : 05117783
Start Date : 11/28/2017
Page No : 1

Groups Printed- Large 2 Axle Vehicles

	Stewart Avenue Southbound					Live Oak Avenue Westbound					Stewart Avenue Northbound					Live Oak Avenue Eastbound							
Start Time	Left	Thru	Right	RTOR	App. Total	Left	Thru	Right	RTOR	App. Total	Left	Thru	Right	RTOR	App. Total	Left	Thru	Right	RTOR	App. Total	Exclu. Total	Inclu. Total	Int. Total
04:00 PM	1	0	2	0	3	1	11	0	0	12	0	1	1	0	2	0	19	1	0	20	0	37	37
04:15 PM	1	0	1	1	2	0	6	0	0	6	1	0	0	0	1	0	14	2	0	16	1	25	26
04:30 PM	0	0	0	0	0	0	6	1	0	7	1	0	0	0	1	0	15	0	0	15	0	23	23
04:45 PM	0	0	1	0	1	0	9	1	0	10	1	0	0	0	1	0	16	0	0	16	0	28	28
Total	2	0	4	1	6	1	32	2	0	35	3	1	1	0	5	0	64	3	0	67	1	113	114
05:00 PM	0	0	0	0	0	0	5	0	0	5	1	0	0	0	1	1	6	1	0	8	0	14	14
05:15 PM	2	1	1	1	4	0	5	0	0	5	0	0	0	0	0	0	11	1	1	12	2	21	23
05:30 PM	1	0	0	0	1	0	1	1	0	2	0	0	0	0	0	0	8	0	0	8	0	11	11
05:45 PM	0	0	0	0	0	0	4	0	0	4	0	0	0	0	0	0	6	1	0	7	0	11	11
Total	3	1	1	1	5	0	15	1	0	16	1	0	0	0	1	1	31	3	1	35	2	57	59
Grand Total	5	1	5	2	11	1	47	3	0	51	4	1	1	0	6	1	95	6	1	102	3	170	173
Apprch %	45.5	9.1	45.5			2	92.2	5.9			66.7	16.7	16.7			1	93.1	5.9					
Total %	2.9	0.6	2.9		6.5	0.6	27.6	1.8		30	2.4	0.6	0.6		3.5	0.6	55.9	3.5		60	1.7	98.3	

	Stewart Avenue Southbound				Live Oak Avenue Westbound				Stewart Avenue Northbound				Live Oak Avenue Eastbound				
Start Time	Left	Thru	Right	App. Total	Left	Thru	Right	App. Total	Left	Thru	Right	App. Total	Left	Thru	Right	App. Total	Int. Total
Peak Hour Analysis From 05:00 PM to 05:45 PM - Peak 1 of 1																	
Peak Hour for Entire Intersection Begins at 05:00 PM																	
05:00 PM	0	0	0	0	0	**5**	0	**5**	**1**	0	0	**1**	**1**	6	**1**	8	14
05:15 PM	**2**	**1**	**1**	**4**	0	5	0	5	0	0	0	0	0	**11**	1	**12**	**21**
05:30 PM	1	0	0	1	0	1	**1**	2	0	0	0	0	0	8	0	8	11
05:45 PM	0	0	0	0	0	4	0	4	0	0	0	0	0	6	1	7	11
Total Volume	3	1	1	5	0	15	1	16	1	0	0	1	1	31	3	35	57
% App. Total	60	20	20		0	93.8	6.2		100	0	0		2.9	88.6	8.6		
PHF	.375	.250	.250	.313	.000	.750	.250	.800	.250	.000	.000	.250	.250	.705	.750	.729	.679

Counts Unlimited
PO Box 1178
Corona, CA 92878
(951) 268-6268

City of Irwindale
N/S: Stewart Avenue
E/W: Live Oak Avenue
Weather: Clear

File Name : 10_IRW_St Lo PM
Site Code : 05117783
Start Date : 11/28/2017
Page No : 2

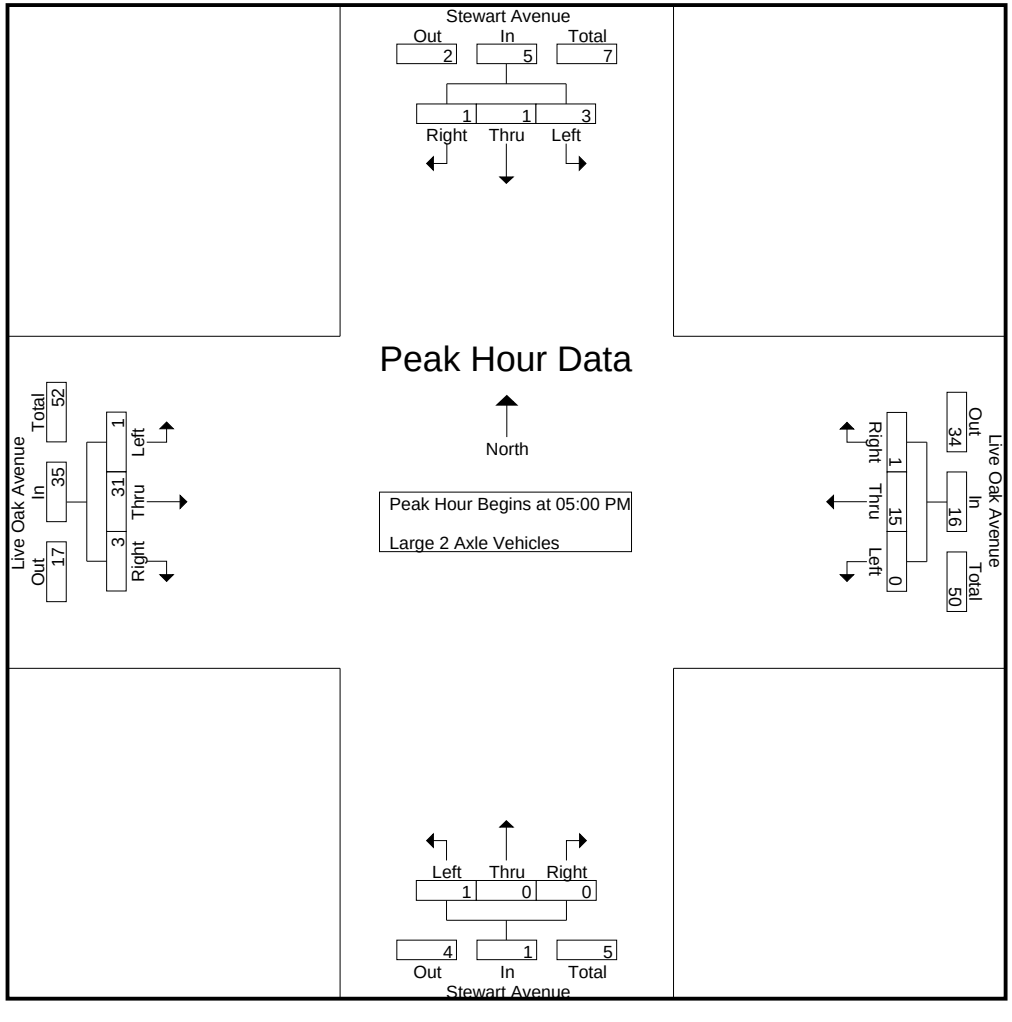

Counts Unlimited
PO Box 1178
Corona, CA 92878
(951) 268-6268

City of Irwindale
N/S: Stewart Avenue
E/W: Live Oak Avenue
Weather: Clear

File Name : 10_IRW_St Lo PM
Site Code : 05117783
Start Date : 11/28/2017

	Stewart Avenue Southbound				Live Oak Avenue Westbound				Stewart Avenue Northbound				Live Oak Avenue Eastbound				
Start Time	Left	Thru	Right	App. Total	Left	Thru	Right	App. Total	Left	Thru	Right	App. Total	Left	Thru	Right	App. Total	Int. Total
Peak Hour Analysis From 05:00 PM to 05:45 PM - Peak 1 of 1																	
Peak Hour for Each Approach Begins at:																	
	05:00 PM				05:00 PM				05:00 PM				05:00 PM				
+0 mins.	0	0	0	0	0	**5**	0	**5**	**1**	0	0	**1**	**1**	6	**1**	8	
+15 mins.	**2**	**1**	**1**	**4**	0	5	0	5	0	0	0	0	0	**11**	1	**12**	
+30 mins.	1	0	0	1	0	1	**1**	2	0	0	0	0	0	8	0	8	
+45 mins.	0	0	0	0	0	4	0	4	0	0	0	0	0	6	1	7	
Total Volume	3	1	1	5	0	15	1	16	1	0	0	1	1	31	3	35	
% App. Total	60	20	20		0	93.8	6.2		100	0	0		2.9	88.6	8.6		
PHF	.375	.250	.250	.313	.000	.750	.250	.800	.250	.000	.000	.250	.250	.705	.750	.729	

Counts Unlimited
PO Box 1178
Corona, CA 92878
(951) 268-6268

City of Irwindale
N/S: Stewart Avenue
E/W: Live Oak Avenue
Weather: Clear

File Name : 10_IRW_St Lo PM
Site Code : 05117783
Start Date : 11/28/2017
Page No : 1

Groups Printed- 3 Axle Vehicles

	Stewart Avenue Southbound					Live Oak Avenue Westbound					Stewart Avenue Northbound					Live Oak Avenue Eastbound							
Start Time	Left	Thru	Right	RTOR	App. Total	Left	Thru	Right	RTOR	App. Total	Left	Thru	Right	RTOR	App. Total	Left	Thru	Right	RTOR	App. Total	Exclu. Total	Inclu. Total	Int. Total
04:00 PM	0	1	0	0	1	1	1	0	0	2	0	0	0	0	0	0	5	1	0	6	0	9	9
04:15 PM	0	1	1	1	2	2	6	1	0	9	0	0	0	0	0	0	1	0	0	1	1	12	13
04:30 PM	0	2	0	0	2	1	1	0	0	2	0	0	0	0	0	0	1	2	1	3	1	7	8
04:45 PM	0	5	0	0	5	0	3	0	0	3	0	0	1	0	1	0	1	0	0	1	0	10	10
Total	0	9	1	1	10	4	11	1	0	16	0	0	1	0	1	0	8	3	1	11	2	38	40
05:00 PM	0	0	0	0	0	0	0	0	0	0	0	0	0	0	0	0	2	0	0	2	0	2	2
05:15 PM	0	3	0	0	3	2	0	0	0	2	0	0	0	0	0	0	0	1	0	1	0	6	6
05:30 PM	0	1	0	0	1	0	0	0	0	0	0	0	0	0	0	0	4	0	0	4	0	5	5
05:45 PM	0	0	0	0	0	0	1	0	0	1	0	0	0	0	0	0	1	0	0	1	0	2	2
Total	0	4	0	0	4	2	1	0	0	3	0	0	0	0	0	0	7	1	0	8	0	15	15
Grand Total	0	13	1	1	14	6	12	1	0	19	0	0	1	0	1	0	15	4	1	19	2	53	55
Apprch %	0	92.9	7.1			31.6	63.2	5.3			0	0	100			0	78.9	21.1					
Total %	0	24.5	1.9		26.4	11.3	22.6	1.9		35.8	0	0	1.9		1.9	0	28.3	7.5		35.8	3.6	96.4	

	Stewart Avenue Southbound				Live Oak Avenue Westbound				Stewart Avenue Northbound				Live Oak Avenue Eastbound				
Start Time	Left	Thru	Right	App. Total	Left	Thru	Right	App. Total	Left	Thru	Right	App. Total	Left	Thru	Right	App. Total	Int. Total
Peak Hour Analysis From 05:00 PM to 05:45 PM - Peak 1 of 1																	
Peak Hour for Entire Intersection Begins at 05:00 PM																	
05:00 PM	0	0	0	0	0	0	0	0	0	0	0	0	0	2	0	2	2
05:15 PM	0	**3**	0	**3**	**2**	0	0	**2**	0	0	0	0	0	0	**1**	1	**6**
05:30 PM	0	1	0	1	0	0	0	0	0	0	0	0	0	**4**	0	**4**	5
05:45 PM	0	0	0	0	0	**1**	0	1	0	0	0	0	0	1	0	1	2
Total Volume	0	4	0	4	2	1	0	3	0	0	0	0	0	7	1	8	15
% App. Total	0	100	0		66.7	33.3	0		0	0	0		0	87.5	12.5		
PHF	.000	.333	.000	.333	.250	.250	.000	.375	.000	.000	.000	.000	.000	.438	.250	.500	.625

Counts Unlimited
PO Box 1178
Corona, CA 92878
(951) 268-6268

City of Irwindale
N/S: Stewart Avenue
E/W: Live Oak Avenue
Weather: Clear

File Name : 10_IRW_St Lo PM
Site Code : 05117783
Start Date : 11/28/2017
Page No : 2

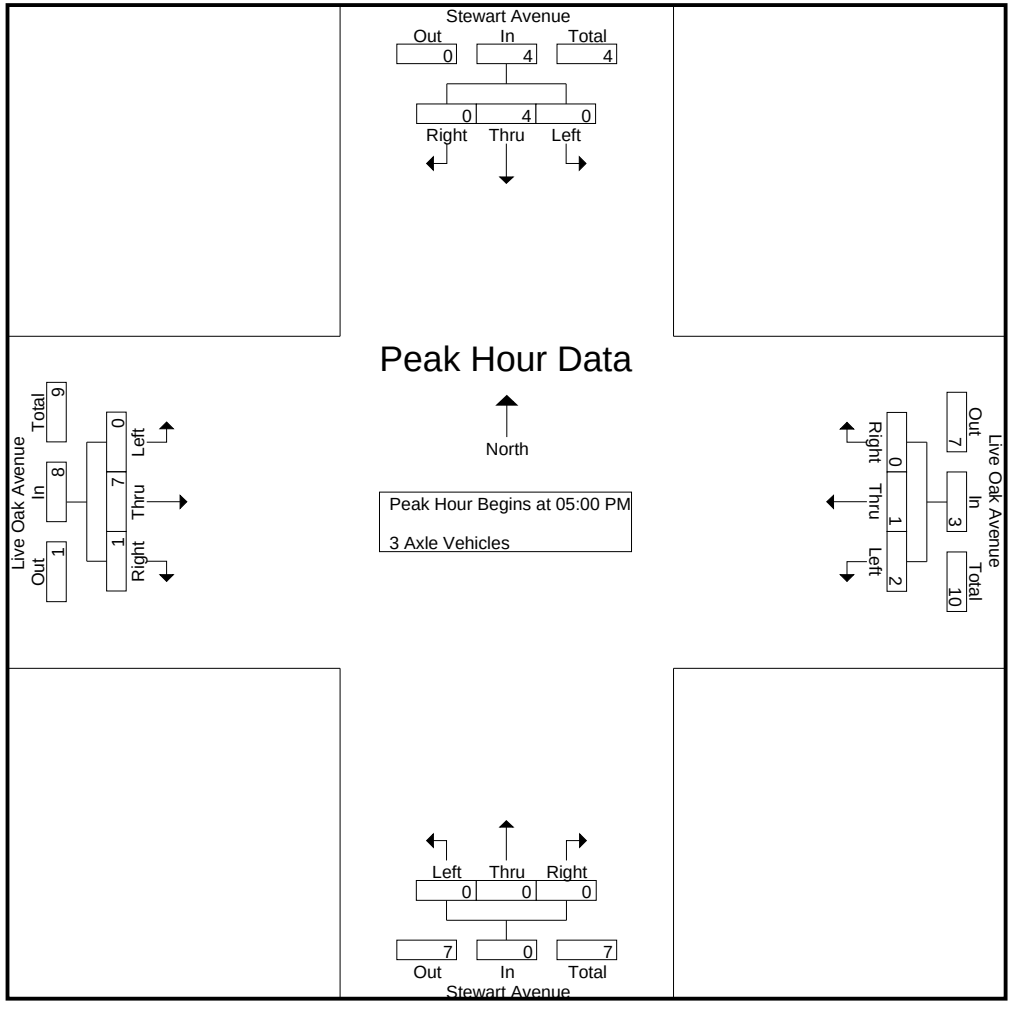

Counts Unlimited
PO Box 1178
Corona, CA 92878
(951) 268-6268

City of Irwindale
N/S: Stewart Avenue
E/W: Live Oak Avenue
Weather: Clear

File Name : 10_IRW_St Lo PM
Site Code : 05117783
Start Date : 11/28/2017

	Stewart Avenue Southbound				Live Oak Avenue Westbound				Stewart Avenue Northbound				Live Oak Avenue Eastbound				
Start Time	Left	Thru	Right	App. Total	Left	Thru	Right	App. Total	Left	Thru	Right	App. Total	Left	Thru	Right	App. Total	Int. Total
Peak Hour Analysis From 05:00 PM to 05:45 PM - Peak 1 of 1																	
Peak Hour for Each Approach Begins at:																	
	05:00 PM				05:00 PM				05:00 PM				05:00 PM				
+0 mins.	0	0	0	0	0	0	0	0	0	0	0	0	0	2	0	2	
+15 mins.	0	**3**	0	**3**	**2**	0	0	**2**	0	0	0	0	0	0	**1**	1	
+30 mins.	0	1	0	1	0	0	0	0	0	0	0	0	0	**4**	0	**4**	
+45 mins.	0	0	0	0	0	**1**	0	1	0	0	0	0	0	1	0	1	
Total Volume	0	4	0	4	2	1	0	3	0	0	0	0	0	7	1	8	
% App. Total	0	100	0		66.7	33.3	0		0	0	0		0	87.5	12.5		
PHF	.000	.333	.000	.333	.250	.250	.000	.375	.000	.000	.000	.000	.000	.438	.250	.500	

Counts Unlimited
PO Box 1178
Corona, CA 92878
(951) 268-6268

City of Irwindale
N/S: Stewart Avenue
E/W: Live Oak Avenue
Weather: Clear

File Name : 10_IRW_St Lo PM
Site Code : 05117783
Start Date : 11/28/2017
Page No : 1

Groups Printed- 4+ Axle Trucks

	Stewart Avenue Southbound					Live Oak Avenue Westbound					Stewart Avenue Northbound					Live Oak Avenue Eastbound							
Start Time	Left	Thru	Right	RTOR	App. Total	Left	Thru	Right	RTOR	App. Total	Left	Thru	Right	RTOR	App. Total	Left	Thru	Right	RTOR	App. Total	Exclu. Total	Inclu. Total	Int. Total
04:00 PM	0	0	0	0	0	0	11	0	0	11	0	0	0	0	0	0	6	0	0	6	0	17	17
04:15 PM	0	0	1	0	1	0	5	0	0	5	0	0	0	0	0	0	3	0	0	3	0	9	9
04:30 PM	0	0	0	0	0	0	5	0	0	5	0	0	0	0	0	0	6	0	0	6	0	11	11
04:45 PM	0	0	0	0	0	0	2	0	0	2	0	0	0	0	0	0	3	0	0	3	0	5	5
Total	0	0	1	0	1	0	23	0	0	23	0	0	0	0	0	0	18	0	0	18	0	42	42
05:00 PM	0	0	0	0	0	0	4	0	0	4	0	0	0	0	0	0	2	0	0	2	0	6	6
05:15 PM	0	0	0	0	0	0	0	0	0	0	0	0	0	0	0	0	2	0	0	2	0	2	2
05:30 PM	0	0	0	0	0	0	4	0	0	4	0	0	0	0	0	0	2	0	0	2	0	6	6
05:45 PM	1	0	0	0	1	0	2	0	0	2	0	0	0	0	0	0	2	0	0	2	0	5	5
Total	1	0	0	0	1	0	10	0	0	10	0	0	0	0	0	0	8	0	0	8	0	19	19
Grand Total	1	0	1	0	2	0	33	0	0	33	0	0	0	0	0	0	26	0	0	26	0	61	61
Apprch %	50	0	50			0	100	0			0	0	0			0	100	0					
Total %	1.6	0	1.6		3.3	0	54.1	0		54.1	0	0	0		0	0	42.6	0		42.6	0	100	

	Stewart Avenue Southbound				Live Oak Avenue Westbound				Stewart Avenue Northbound				Live Oak Avenue Eastbound				
Start Time	Left	Thru	Right	App. Total	Left	Thru	Right	App. Total	Left	Thru	Right	App. Total	Left	Thru	Right	App. Total	Int. Total
Peak Hour Analysis From 05:00 PM to 05:45 PM - Peak 1 of 1																	
Peak Hour for Entire Intersection Begins at 05:00 PM																	
05:00 PM	0	0	0	0	0	**4**	0	**4**	0	0	0	0	0	**2**	0	**2**	**6**
05:15 PM	0	0	0	0	0	0	0	0	0	0	0	0	0	2	0	2	2
05:30 PM	0	0	0	0	0	4	0	4	0	0	0	0	0	2	0	2	6
05:45 PM	**1**	0	0	**1**	0	2	0	2	0	0	0	0	0	2	0	2	5
Total Volume	1	0	0	1	0	10	0	10	0	0	0	0	0	8	0	8	19
% App. Total	100	0	0		0	100	0		0	0	0		0	100	0		
PHF	.250	.000	.000	.250	.000	.625	.000	.625	.000	.000	.000	.000	.000	1.00	.000	1.00	.792

Counts Unlimited
PO Box 1178
Corona, CA 92878
(951) 268-6268

City of Irwindale
N/S: Stewart Avenue
E/W: Live Oak Avenue
Weather: Clear

File Name : 10_IRW_St Lo PM
Site Code : 05117783
Start Date : 11/28/2017
Page No : 2

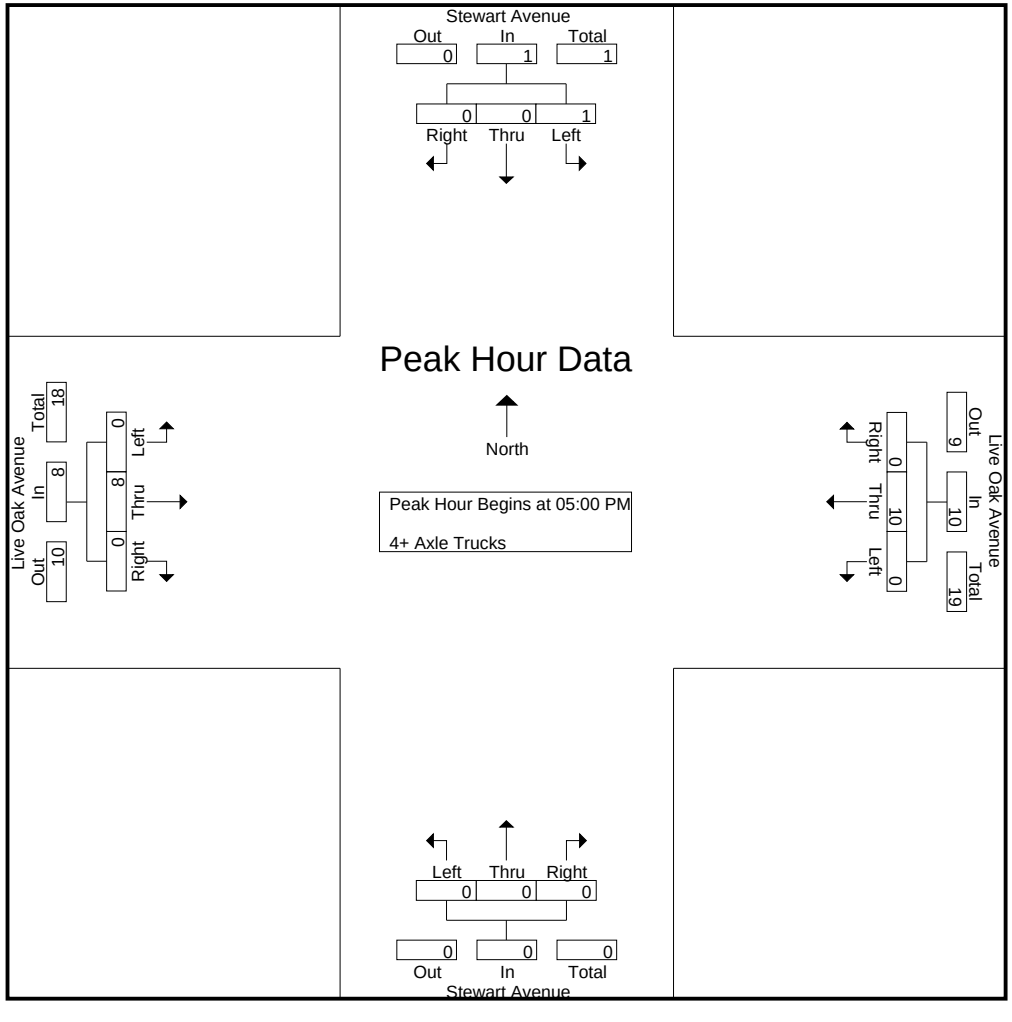

Counts Unlimited
PO Box 1178
Corona, CA 92878
(951) 268-6268

City of Irwindale
N/S: Stewart Avenue
E/W: Live Oak Avenue
Weather: Clear

File Name : 10_IRW_St Lo PM
Site Code : 05117783
Start Date : 11/28/2017

	Stewart Avenue Southbound				Live Oak Avenue Westbound				Stewart Avenue Northbound				Live Oak Avenue Eastbound				
Start Time	Left	Thru	Right	App. Total	Left	Thru	Right	App. Total	Left	Thru	Right	App. Total	Left	Thru	Right	App. Total	Int. Total
Peak Hour Analysis From 05:00 PM to 05:45 PM - Peak 1 of 1																	
Peak Hour for Each Approach Begins at:																	
	05:00 PM				05:00 PM				05:00 PM				05:00 PM				
+0 mins.	0	0	0	0	0	**4**	0	**4**	0	0	0	0	0	**2**	0	**2**	
+15 mins.	0	0	0	0	0	0	0	0	0	0	0	0	0	2	0	2	
+30 mins.	0	0	0	0	0	4	0	4	0	0	0	0	0	2	0	2	
+45 mins.	**1**	0	0	**1**	0	2	0	2	0	0	0	0	0	2	0	2	
Total Volume	1	0	0	1	0	10	0	10	0	0	0	0	0	8	0	8	
% App. Total	100	0	0		0	100	0		0	0	0		0	100	0		
PHF	.250	.000	.000	.250	.000	.625	.000	.625	.000	.000	.000	.000	.000	1.000	.000	1.000	

Location: Irwindale
N/S: Stewart Avenue
E/W: Live Oak Avenue

Date: 11/28/2017
Day: Tuesday

PEDESTRIANS

	North Leg Stewart Avenue	East Leg Live Oak Avenue	South Leg Stewart Avenue	West Leg Live Oak Avenue	TOTAL
7:00 AM	0	2	0	0	2
7:15 AM	1	3	2	0	6
7:30 AM	0	0	3	0	3
7:45 AM	0	0	1	0	1
8:00 AM	0	3	0	0	3
8:15 AM	0	0	0	0	0
8:30 AM	1	2	1	0	4
8:45 AM	0	0	0	0	0
TOTAL VOLUMES:	2	10	7	0	19

	North Leg Stewart Avenue	East Leg Live Oak Avenue	South Leg Stewart Avenue	West Leg Live Oak Avenue	TOTAL
4:00 PM	1	4	0	0	5
4:15 PM	0	4	0	0	4
4:30 PM	0	3	0	0	3
4:45 PM	1	0	1	0	2
5:00 PM	0	1	0	0	1
5:15 PM	0	2	0	0	2
5:30 PM	1	2	0	0	3
5:45 PM	0	0	0	0	0
TOTAL VOLUMES:	3	16	1	0	20

Counts Unlimited
P.O. Box 1178
Corona, CA 92878
(951) 268-6268

Location: Irwindale
N/S: Stewart Avenue
E/W: Live Oak Avenue



Date: 11/28/2017
Day: Tuesday

BICYCLES

	North Leg Stewart Avenue	East Leg Live Oak Avenue	South Leg Stewart Avenue	West Leg Live Oak Avenue	TOTAL
7:00 AM	0	0	0	0	0
7:15 AM	0	0	0	0	0
7:30 AM	0	0	0	0	0
7:45 AM	0	1	1	0	2
8:00 AM	0	0	0	0	0
8:15 AM	0	0	0	1	1
8:30 AM	0	0	0	0	0
8:45 AM	0	0	0	0	0
TOTAL VOLUMES:	0	1	1	1	3

	North Leg Stewart Avenue	East Leg Live Oak Avenue	South Leg Stewart Avenue	West Leg Live Oak Avenue	TOTAL
4:00 PM	1	0	1	0	2
4:15 PM	0	0	0	0	0
4:30 PM	0	2	0	0	2
4:45 PM	1	1	1	0	3
5:00 PM	0	0	1	0	1
5:15 PM	0	0	1	0	1
5:30 PM	0	0	0	0	0
5:45 PM	0	3	0	0	3
TOTAL VOLUMES:	2	6	4	0	12

Counts Unlimited
P.O. Box 1178
Corona, CA 92878
(951) 268-6268

Counts Unlimited
PO Box 1178
Corona, CA 92878
(951) 268-6268

City of Irwindale
N/S: Baldwin Park Boulevard
E/W: Live Oak Avenue
Weather: Clear

File Name : 11_IRW_BP Lo AM
Site Code : 05117783
Start Date : 11/28/2017
Page No : 1

Groups Printed- Passenger Vehicles - Large 2 Axle Vehicles - 3 Axle Vehicles - 4+ Axle Trucks

	Live Oak Avenue Westbound				Baldwin Park Boulevard Northbound				Live Oak Avenue Eastbound						
Start Time	Left	Thru	RTOR	App. Total	Left	Right	RTOR	App. Total	Thru	Right	RTOR	App. Total	Exclu. Total	Inclu. Total	Int. Total
07:00 AM	22	242	0	264	100	35	25	135	112	9	2	121	27	520	547
07:15 AM	22	281	0	303	79	43	24	122	121	23	9	144	33	569	602
07:30 AM	35	299	0	334	82	61	28	143	134	17	6	151	34	628	662
07:45 AM	40	256	0	296	78	70	26	148	181	29	7	210	33	654	687
Total	119	1078	0	1197	339	209	103	548	548	78	24	626	127	2371	2498
08:00 AM	46	220	0	266	72	63	27	135	145	20	2	165	29	566	595
08:15 AM	52	222	0	274	50	41	28	91	150	17	5	167	33	532	565
08:30 AM	34	215	0	249	50	27	20	77	130	18	7	148	27	474	501
08:45 AM	40	169	0	209	46	48	24	94	151	16	4	167	28	470	498
Total	172	826	0	998	218	179	99	397	576	71	18	647	117	2042	2159
Grand Total	291	1904	0	2195	557	388	202	945	1124	149	42	1273	244	4413	4657
Apprch %	13.3	86.7			58.9	41.1			88.3	11.7					
Total %	6.6	43.1		49.7	12.6	8.8		21.4	25.5	3.4		28.8	5.2	94.8	
Passenger Vehicles	257	1696		1953	544	363		1096	913	137		1090	0	0	4139
% Passenger Vehicles	88.3	89.1	0	89	97.7	93.6	93.6	95.6	81.2	91.9	95.2	82.9	0	0	88.9
Large 2 Axle Vehicles	13	95		108	11	11		28	70	10		81	0	0	217
% Large 2 Axle Vehicles	4.5	5	0	4.9	2	2.8	3	2.4	6.2	6.7	2.4	6.2	0	0	4.7
3 Axle Vehicles	11	23		34	1	10		15	30	1		32	0	0	81
% 3 Axle Vehicles	3.8	1.2	0	1.5	0.2	2.6	2	1.3	2.7	0.7	2.4	2.4	0	0	1.7
4+ Axle Trucks	10	90		100	1	4		8	111	1		112	0	0	220
% 4+ Axle Trucks	3.4	4.7	0	4.6	0.2	1	1.5	0.7	9.9	0.7	0	8.5	0	0	4.7

	Live Oak Avenue Westbound			Baldwin Park Boulevard Northbound			Live Oak Avenue Eastbound			
Start Time	Left	Thru	App. Total	Left	Right	App. Total	Thru	Right	App. Total	Int. Total
Peak Hour Analysis From 07:00 AM to 08:45 AM - Peak 1 of 1										
Peak Hour for Entire Intersection Begins at 07:15 AM										
07:15 AM	22	281	303	79	43	122	121	23	144	569
07:30 AM	35	**299**	**334**	**82**	61	143	134	17	151	628
07:45 AM	40	256	296	78	**70**	**148**	**181**	**29**	**210**	**654**
08:00 AM	**46**	220	266	72	63	135	145	20	165	566
Total Volume	143	1056	1199	311	237	548	581	89	670	2417
% App. Total	11.9	88.1		56.8	43.2		86.7	13.3		
PHF	.777	.883	.897	.948	.846	.926	.802	.767	.798	.924

Counts Unlimited
PO Box 1178
Corona, CA 92878
(951) 268-6268

City of Irwindale
N/S: Baldwin Park Boulevard
E/W: Live Oak Avenue
Weather: Clear

File Name : 11_IRW_BP Lo AM
Site Code : 05117783
Start Date : 11/28/2017

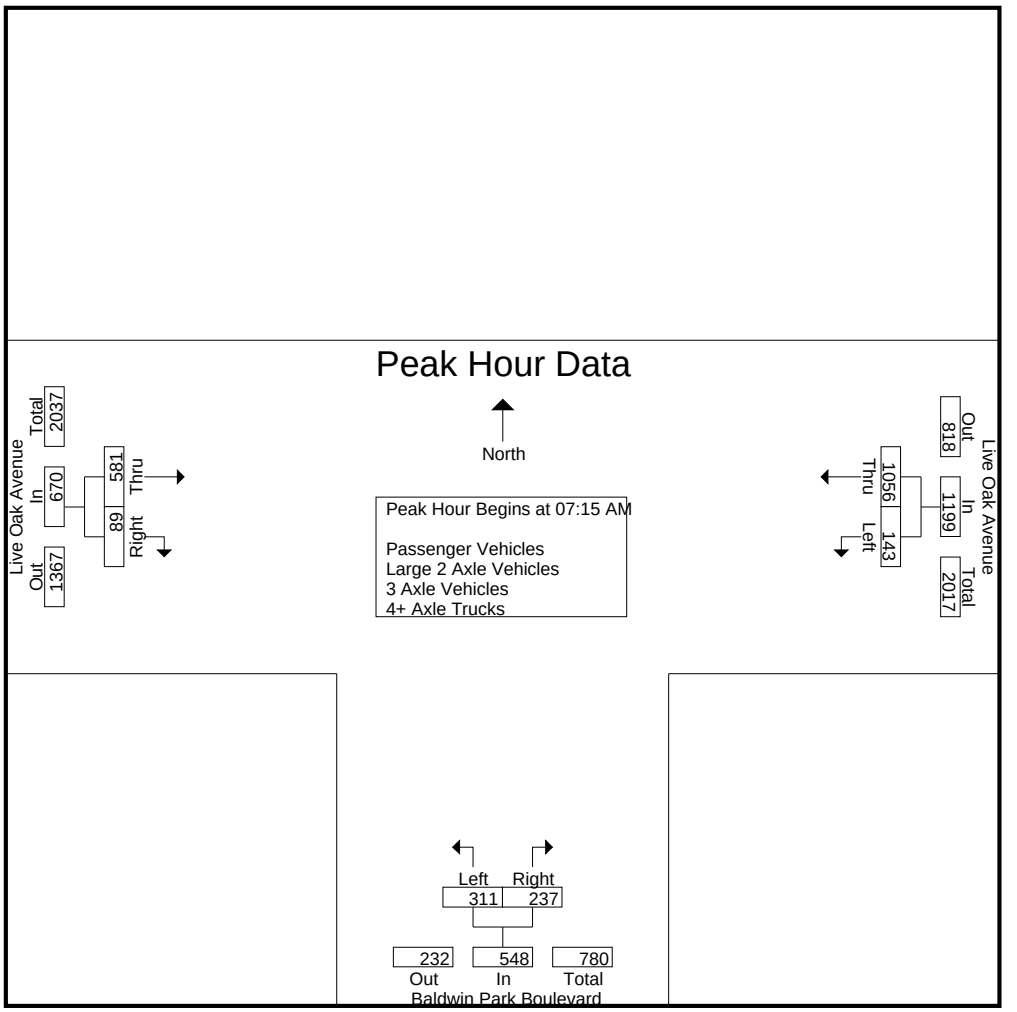

Peak Hour Analysis From 07:00 AM to 08:45 AM - Peak 1 of 1
Peak Hour for Each Approach Begins at:

	07:15 AM			07:00 AM			07:30 AM		
+0 mins.	22	281	303	**100**	35	135	134	17	151
+15 mins.	35	**299**	**334**	79	43	122	**181**	**29**	**210**
+30 mins.	40	256	296	82	61	143	145	20	165
+45 mins.	**46**	220	266	78	**70**	**148**	150	17	167
Total Volume	143	1056	1199	339	209	548	610	83	693
% App. Total	11.9	88.1		61.9	38.1		88	12	
PHF	.777	.883	.897	.848	.746	.926	.843	.716	.825

Counts Unlimited
PO Box 1178
Corona, CA 92878
(951) 268-6268

City of Irwindale
N/S: Baldwin Park Boulevard
E/W: Live Oak Avenue
Weather: Clear

File Name : 11_IRW_BP Lo AM
Site Code : 05117783
Start Date : 11/28/2017
Page No : 1

Groups Printed- Passenger Vehicles

	Live Oak Avenue Westbound				Baldwin Park Boulevard Northbound				Live Oak Avenue Eastbound						
Start Time	Left	Thru	RTOR	App. Total	Left	Right	RTOR	App. Total	Thru	Right	RTOR	App. Total	Exclu. Total	Inclu. Total	Int. Total
07:00 AM	18	229	0	247	97	32	23	129	89	8	2	97	25	473	498
07:15 AM	21	254	0	275	78	40	23	118	104	21	9	125	32	518	550
07:30 AM	34	263	0	297	81	56	25	137	109	17	6	126	31	560	591
07:45 AM	37	234	0	271	78	65	24	143	155	28	7	183	31	597	628
Total	110	980	0	1090	334	193	95	527	457	74	24	531	119	2148	2267
08:00 AM	40	201	0	241	70	63	27	133	119	18	2	137	29	511	540
08:15 AM	44	193	0	237	47	39	26	86	114	13	4	127	30	450	480
08:30 AM	28	182	0	210	48	26	19	74	105	18	7	123	26	407	433
08:45 AM	35	140	0	175	45	42	22	87	118	14	3	132	25	394	419
Total	147	716	0	863	210	170	94	380	456	63	16	519	110	1762	1872
Grand Total	257	1696	0	1953	544	363	189	907	913	137	40	1050	229	3910	4139
Apprch %	13.2	86.8			60	40			87	13					
Total %	6.6	43.4		49.9	13.9	9.3		23.2	23.4	3.5		26.9	5.5	94.5	

	Live Oak Avenue Westbound			Baldwin Park Boulevard Northbound			Live Oak Avenue Eastbound			
Start Time	Left	Thru	App. Total	Left	Right	App. Total	Thru	Right	App. Total	Int. Total
Peak Hour Analysis From 07:15 AM to 08:00 AM - Peak 1 of 1										
Peak Hour for Entire Intersection Begins at 07:15 AM										
07:15 AM	21	254	275	78	40	118	104	21	125	518
07:30 AM	34	**263**	**297**	**81**	56	137	109	17	126	560
07:45 AM	37	234	271	78	**65**	**143**	**155**	**28**	**183**	**597**
08:00 AM	**40**	201	241	70	63	133	119	18	137	511
Total Volume	132	952	1084	307	224	531	487	84	571	2186
% App. Total	12.2	87.8		57.8	42.2		85.3	14.7		
PHF	.825	.905	.912	.948	.862	.928	.785	.750	.780	.915

Counts Unlimited
PO Box 1178
Corona, CA 92878
(951) 268-6268

City of Irwindale
N/S: Baldwin Park Boulevard
E/W: Live Oak Avenue
Weather: Clear

File Name : 11_IRW_BP Lo AM
Site Code : 05117783
Start Date : 11/28/2017

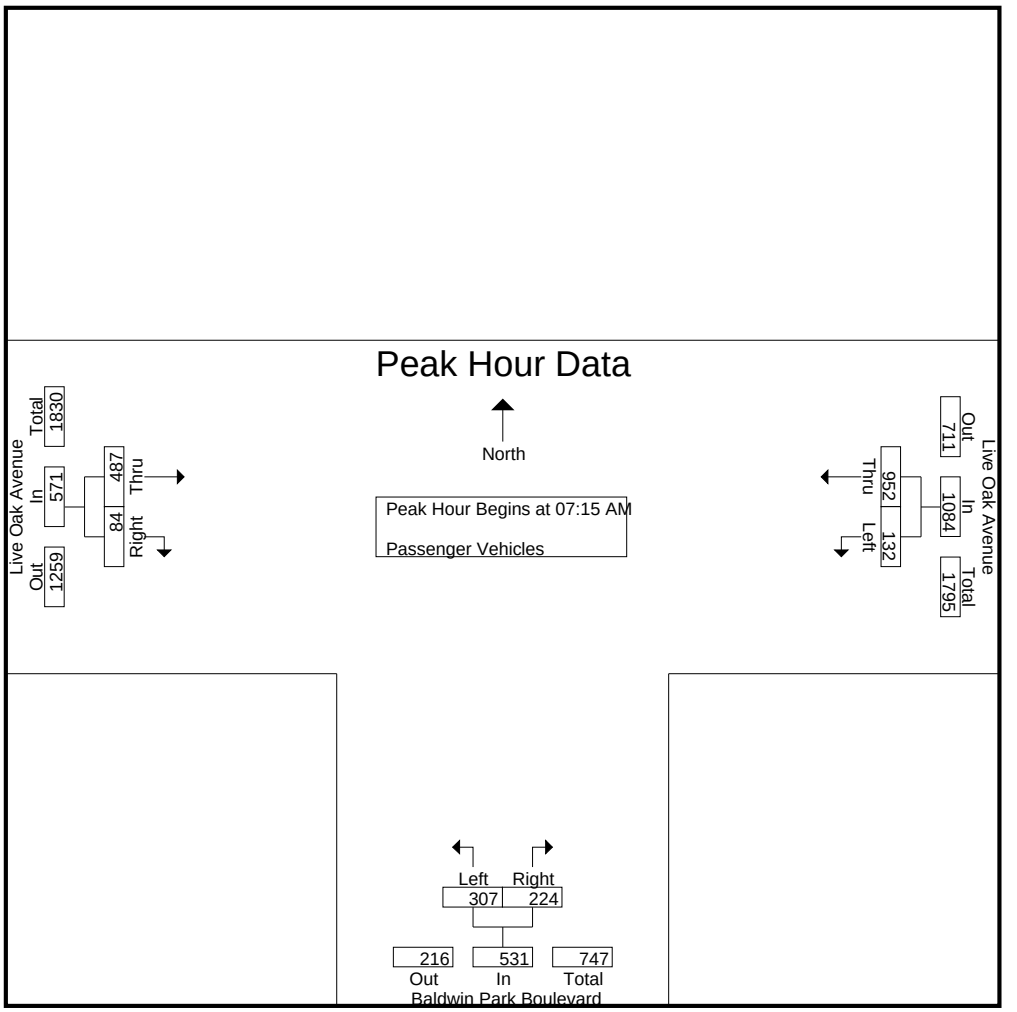

Peak Hour Analysis From 07:15 AM to 08:00 AM - Peak 1 of 1
Peak Hour for Each Approach Begins at:

	07:15 AM			07:15 AM			07:15 AM		
+0 mins.	21	254	275	78	40	118	104	21	125
+15 mins.	34	**263**	**297**	**81**	56	137	109	17	126
+30 mins.	37	234	271	78	**65**	**143**	**155**	**28**	**183**
+45 mins.	**40**	201	241	70	63	133	119	18	137
Total Volume	132	952	1084	307	224	531	487	84	571
% App. Total	12.2	87.8		57.8	42.2		85.3	14.7	
PHF	.825	.905	.912	.948	.862	.928	.785	.750	.780

Counts Unlimited
PO Box 1178
Corona, CA 92878
(951) 268-6268

City of Irwindale
N/S: Baldwin Park Boulevard
E/W: Live Oak Avenue
Weather: Clear

File Name : 11_IRW_BP Lo AM
Site Code : 05117783
Start Date : 11/28/2017
Page No : 1

Groups Printed- Large 2 Axle Vehicles

	Live Oak Avenue Westbound				Baldwin Park Boulevard Northbound				Live Oak Avenue Eastbound						
Start Time	Left	Thru	RTOR	App. Total	Left	Right	RTOR	App. Total	Thru	Right	RTOR	App. Total	Exclu. Total	Inclu. Total	Int. Total
07:00 AM	1	9	0	10	2	1	0	3	7	1	0	8	0	21	21
07:15 AM	0	10	0	10	1	2	1	3	4	2	0	6	1	19	20
07:30 AM	1	23	0	24	1	2	2	3	6	0	0	6	2	33	35
07:45 AM	0	14	0	14	0	2	0	2	10	1	0	11	0	27	27
Total	2	56	0	58	4	7	3	11	27	4	0	31	3	100	103
08:00 AM	2	2	0	4	2	0	0	2	12	1	0	13	0	19	19
08:15 AM	3	15	0	18	2	1	1	3	14	3	0	17	1	38	39
08:30 AM	2	9	0	11	2	1	1	3	5	0	0	5	1	19	20
08:45 AM	4	13	0	17	1	2	1	3	12	2	1	14	2	34	36
Total	11	39	0	50	7	4	3	11	43	6	1	49	4	110	114
Grand Total	13	95	0	108	11	11	6	22	70	10	1	80	7	210	217
Apprch %	12	88			50	50			87.5	12.5					
Total %	6.2	45.2		51.4	5.2	5.2		10.5	33.3	4.8		38.1	3.2	96.8	

	Live Oak Avenue Westbound			Baldwin Park Boulevard Northbound			Live Oak Avenue Eastbound			
Start Time	Left	Thru	App. Total	Left	Right	App. Total	Thru	Right	App. Total	Int. Total
Peak Hour Analysis From 07:15 AM to 08:00 AM - Peak 1 of 1										
Peak Hour for Entire Intersection Begins at 07:15 AM										
07:15 AM	0	10	10	1	**2**	**3**	4	**2**	6	19
07:30 AM	1	**23**	**24**	1	2	3	6	0	6	**33**
07:45 AM	0	14	14	0	2	2	10	1	11	27
08:00 AM	**2**	2	4	**2**	0	2	**12**	1	**13**	19
Total Volume	3	49	52	4	6	10	32	4	36	98
% App. Total	5.8	94.2		40	60		88.9	11.1		
PHF	.375	.533	.542	.500	.750	.833	.667	.500	.692	.742

Counts Unlimited
PO Box 1178
Corona, CA 92878
(951) 268-6268

City of Irwindale
N/S: Baldwin Park Boulevard
E/W: Live Oak Avenue
Weather: Clear

File Name : 11_IRW_BP Lo AM
Site Code : 05117783
Start Date : 11/28/2017

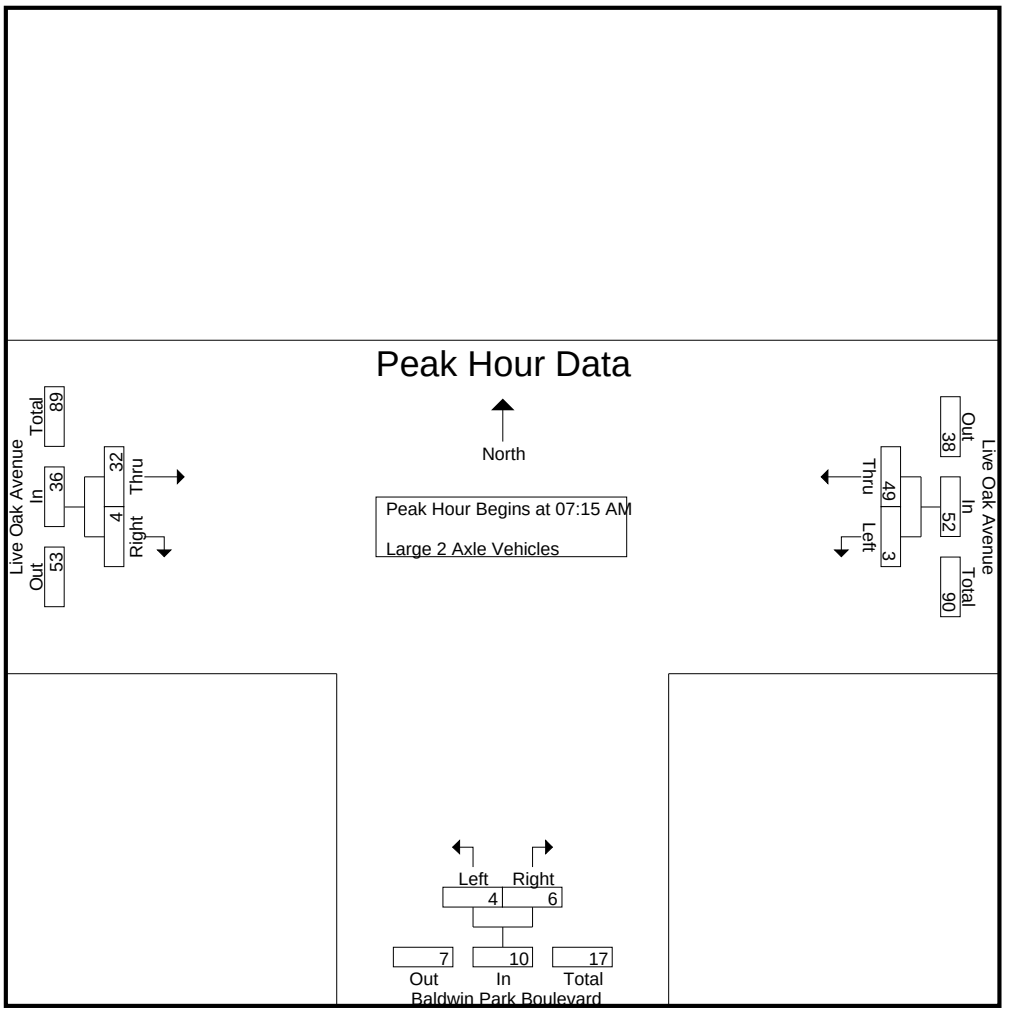

Peak Hour Analysis From 07:15 AM to 08:00 AM - Peak 1 of 1
Peak Hour for Each Approach Begins at:

	07:15 AM			07:15 AM			07:15 AM		
+0 mins.	0	10	10	1	**2**	**3**	4	**2**	6
+15 mins.	1	**23**	**24**	1	2	3	6	0	6
+30 mins.	0	14	14	0	2	2	10	1	11
+45 mins.	**2**	2	4	**2**	0	2	**12**	1	**13**
Total Volume	3	49	52	4	6	10	32	4	36
% App. Total	5.8	94.2		40	60		88.9	11.1	
PHF	.375	.533	.542	.500	.750	.833	.667	.500	.692

Counts Unlimited
PO Box 1178
Corona, CA 92878
(951) 268-6268

City of Irwindale
N/S: Baldwin Park Boulevard
E/W: Live Oak Avenue
Weather: Clear

File Name : 11_IRW_BP Lo AM
Site Code : 05117783
Start Date : 11/28/2017
Page No : 1

Groups Printed- 3 Axle Vehicles

	Live Oak Avenue Westbound				Baldwin Park Boulevard Northbound				Live Oak Avenue Eastbound						
Start Time	Left	Thru	RTOR	App. Total	Left	Right	RTOR	App. Total	Thru	Right	RTOR	App. Total	Exclu. Total	Inclu. Total	Int. Total
07:00 AM	2	1	0	3	0	1	1	1	2	0	0	2	1	6	7
07:15 AM	1	2	0	3	0	0	0	0	1	0	0	1	0	4	4
07:30 AM	0	1	0	1	0	3	1	3	5	0	0	5	1	9	10
07:45 AM	1	4	0	5	0	2	1	2	2	0	0	2	1	9	10
Total	4	8	0	12	0	6	3	6	10	0	0	10	3	28	31
08:00 AM	2	1	0	3	0	0	0	0	0	0	0	0	0	3	3
08:15 AM	2	6	0	8	1	0	0	1	5	1	1	6	1	15	16
08:30 AM	3	1	0	4	0	0	0	0	10	0	0	10	0	14	14
08:45 AM	0	7	0	7	0	4	1	4	5	0	0	5	1	16	17
Total	7	15	0	22	1	4	1	5	20	1	1	21	2	48	50
Grand Total	11	23	0	34	1	10	4	11	30	1	1	31	5	76	81
Apprch %	32.4	67.6			9.1	90.9			96.8	3.2					
Total %	14.5	30.3		44.7	1.3	13.2		14.5	39.5	1.3		40.8	6.2	93.8	

	Live Oak Avenue Westbound			Baldwin Park Boulevard Northbound			Live Oak Avenue Eastbound			
Start Time	Left	Thru	App. Total	Left	Right	App. Total	Thru	Right	App. Total	Int. Total
Peak Hour Analysis From 07:15 AM to 08:00 AM - Peak 1 of 1										
Peak Hour for Entire Intersection Begins at 07:15 AM										
07:15 AM	1	2	3	0	0	0	1	0	1	4
07:30 AM	0	1	1	0	**3**	**3**	**5**	0	**5**	**9**
07:45 AM	1	**4**	**5**	0	2	2	2	0	2	9
08:00 AM	**2**	1	3	0	0	0	0	0	0	3
Total Volume	4	8	12	0	5	5	8	0	8	25
% App. Total	33.3	66.7		0	100		100	0		
PHF	.500	.500	.600	.000	.417	.417	.400	.000	.400	.694

Counts Unlimited
PO Box 1178
Corona, CA 92878
(951) 268-6268

City of Irwindale
N/S: Baldwin Park Boulevard
E/W: Live Oak Avenue
Weather: Clear

File Name : 11_IRW_BP Lo AM
Site Code : 05117783
Start Date : 11/28/2017
Page No : 2

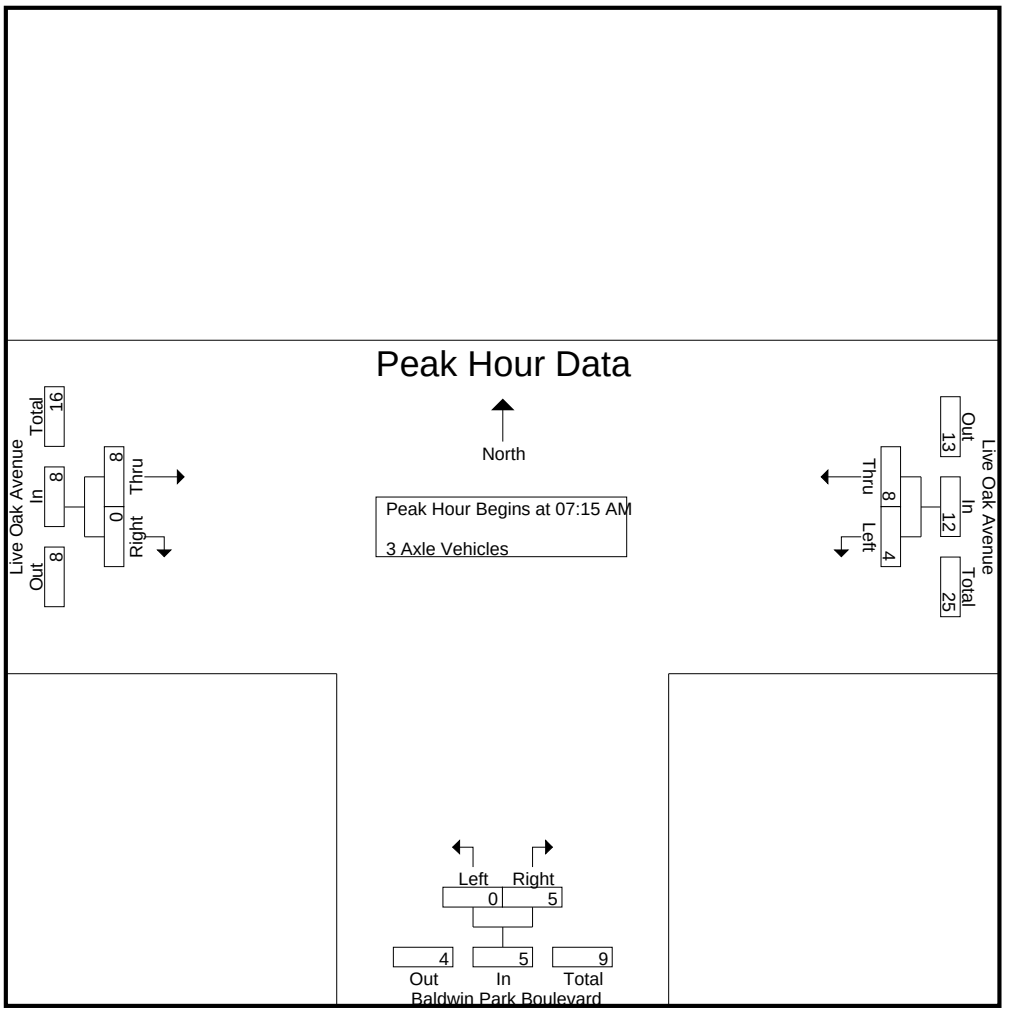

Peak Hour Analysis From 07:15 AM to 08:00 AM - Peak 1 of 1
Peak Hour for Each Approach Begins at:

	07:15 AM			07:15 AM			07:15 AM		
+0 mins.	1	2	3	0	0	0	1	0	1
+15 mins.	0	1	1	0	**3**	**3**	**5**	0	**5**
+30 mins.	1	**4**	**5**	0	2	2	2	0	2
+45 mins.	**2**	1	3	0	0	0	0	0	0
Total Volume	4	8	12	0	5	5	8	0	8
% App. Total	33.3	66.7		0	100		100	0	
PHF	.500	.500	.600	.000	.417	.417	.400	.000	.400

Counts Unlimited
PO Box 1178
Corona, CA 92878
(951) 268-6268

City of Irwindale
N/S: Baldwin Park Boulevard
E/W: Live Oak Avenue
Weather: Clear

File Name : 11_IRW_BP Lo AM
Site Code : 05117783
Start Date : 11/28/2017
Page No : 1

Groups Printed- 4+ Axle Trucks

	Live Oak Avenue Westbound				Baldwin Park Boulevard Northbound				Live Oak Avenue Eastbound						
Start Time	Left	Thru	RTOR	App. Total	Left	Right	RTOR	App. Total	Thru	Right	RTOR	App. Total	Exclu. Total	Inclu. Total	Int. Total
07:00 AM	1	3	0	4	1	1	1	2	14	0	0	14	1	20	21
07:15 AM	0	15	0	15	0	1	0	1	12	0	0	12	0	28	28
07:30 AM	0	12	0	12	0	0	0	0	14	0	0	14	0	26	26
07:45 AM	2	4	0	6	0	1	1	1	14	0	0	14	1	21	22
Total	3	34	0	37	1	3	2	4	54	0	0	54	2	95	97
08:00 AM	2	16	0	18	0	0	0	0	14	1	0	15	0	33	33
08:15 AM	3	8	0	11	0	1	1	1	17	0	0	17	1	29	30
08:30 AM	1	23	0	24	0	0	0	0	10	0	0	10	0	34	34
08:45 AM	1	9	0	10	0	0	0	0	16	0	0	16	0	26	26
Total	7	56	0	63	0	1	1	1	57	1	0	58	1	122	123
Grand Total	10	90	0	100	1	4	3	5	111	1	0	112	3	217	220
Apprch %	10	90			20	80			99.1	0.9					
Total %	4.6	41.5		46.1	0.5	1.8		2.3	51.2	0.5		51.6	1.4	98.6	

	Live Oak Avenue Westbound			Baldwin Park Boulevard Northbound			Live Oak Avenue Eastbound			
Start Time	Left	Thru	App. Total	Left	Right	App. Total	Thru	Right	App. Total	Int. Total
Peak Hour Analysis From 07:15 AM to 08:00 AM - Peak 1 of 1										
Peak Hour for Entire Intersection Begins at 07:15 AM										
07:15 AM	0	15	15	0	**1**	**1**	12	0	12	28
07:30 AM	0	12	12	0	0	0	**14**	0	14	26
07:45 AM	**2**	4	6	0	1	1	14	0	14	21
08:00 AM	2	**16**	**18**	0	0	0	14	**1**	**15**	**33**
Total Volume	4	47	51	0	2	2	54	1	55	108
% App. Total	7.8	92.2		0	100		98.2	1.8		
PHF	.500	.734	.708	.000	.500	.500	.964	.250	.917	.818

Counts Unlimited
PO Box 1178
Corona, CA 92878
(951) 268-6268

City of Irwindale
N/S: Baldwin Park Boulevard
E/W: Live Oak Avenue
Weather: Clear

File Name : 11_IRW_BP Lo AM
Site Code : 05117783
Start Date : 11/28/2017

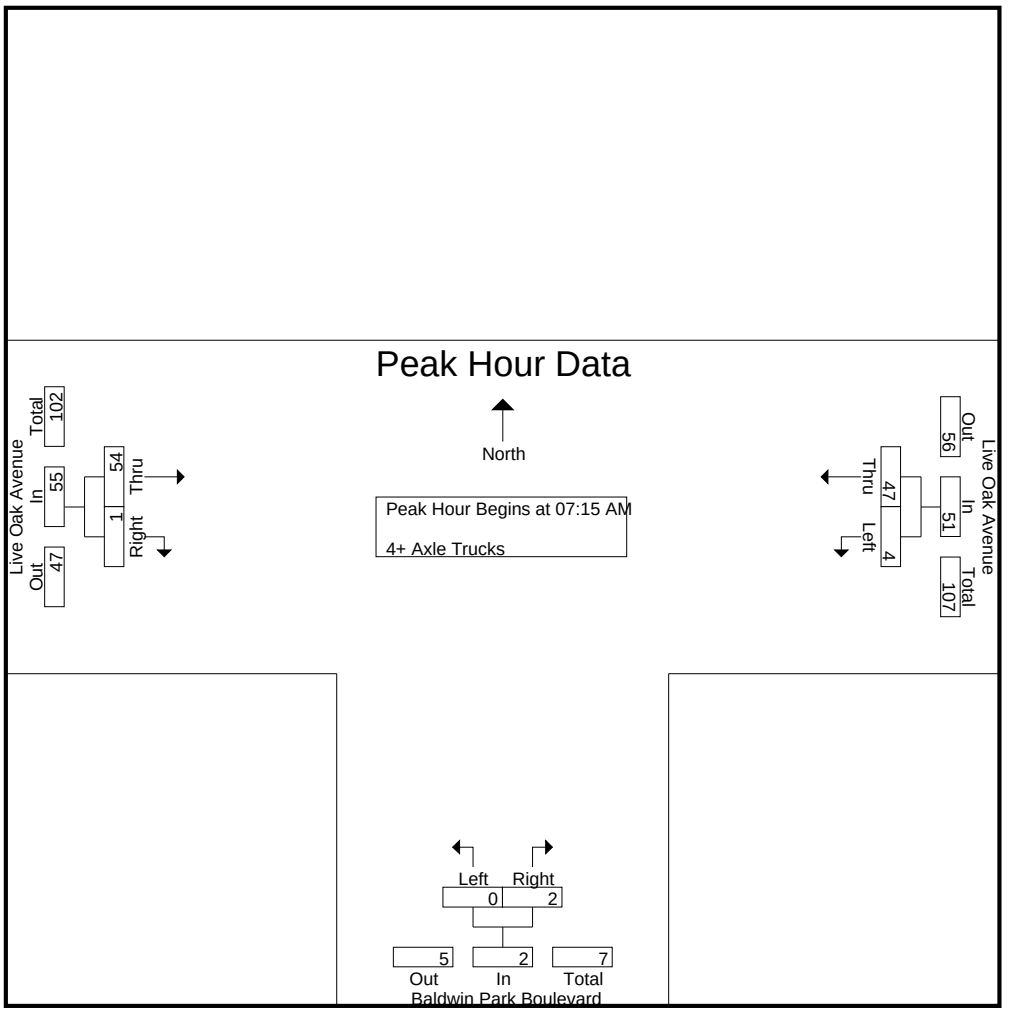

Peak Hour Analysis From 07:15 AM to 08:00 AM - Peak 1 of 1
Peak Hour for Each Approach Begins at:

	07:15 AM			07:15 AM			07:15 AM		
+0 mins.	0	15	15	0	**1**	**1**	12	0	12
+15 mins.	0	12	12	0	0	0	**14**	0	14
+30 mins.	**2**	4	6	0	1	1	14	0	14
+45 mins.	2	**16**	**18**	0	0	0	14	**1**	**15**
Total Volume	4	47	51	0	2	2	54	1	55
% App. Total	7.8	92.2		0	100		98.2	1.8	
PHF	.500	.734	.708	.000	.500	.500	.964	.250	.917

Counts Unlimited
PO Box 1178
Corona, CA 92878
(951) 268-6268

City of Irwindale
N/S: Baldwin Park Boulevard
E/W: Live Oak Avenue
Weather: Clear

File Name : 11_IRW_BP Lo PM
Site Code : 05117783
Start Date : 11/28/2017
Page No : 1

Groups Printed- Passenger Vehicles - Large 2 Axle Vehicles - 3 Axle Vehicles - 4+ Axle Trucks

	Live Oak Avenue Westbound				Baldwin Park Boulevard Northbound				Live Oak Avenue Eastbound						
Start Time	Left	Thru	RTOR	App. Total	Left	Right	RTOR	App. Total	Thru	Right	RTOR	App. Total	Exclu. Total	Inclu. Total	Int. Total
04:00 PM	58	140	0	198	26	29	13	55	292	89	6	381	19	634	653
04:15 PM	54	142	0	196	21	29	15	50	288	130	6	418	21	664	685
04:30 PM	59	159	0	218	31	22	15	53	320	145	19	465	34	736	770
04:45 PM	65	159	0	224	21	21	10	42	303	172	26	475	36	741	777
Total	236	600	0	836	99	101	53	200	1203	536	57	1739	110	2775	2885
05:00 PM	63	173	0	236	21	19	5	40	356	140	15	496	20	772	792
05:15 PM	78	167	0	245	12	27	16	39	276	137	29	413	45	697	742
05:30 PM	74	124	0	198	23	27	14	50	324	174	24	498	38	746	784
05:45 PM	67	138	0	205	15	26	15	41	299	136	15	435	30	681	711
Total	282	602	0	884	71	99	50	170	1255	587	83	1842	133	2896	3029
Grand Total	518	1202	0	1720	170	200	103	370	2458	1123	140	3581	243	5671	5914
Apprch %	30.1	69.9			45.9	54.1			68.6	31.4					
Total %	9.1	21.2		30.3	3	3.5		6.5	43.3	19.8		63.1	4.1	95.9	
Passenger Vehicles	495	1122		1617	158	183		439	2334	1103		3575	0	0	5631
% Passenger Vehicles	95.6	93.3	0	94	92.9	91.5	95.1	92.8	95	98.2	98.6	96.1	0	0	95.2
Large 2 Axle Vehicles	4	28		32	8	7		16	79	18		98	0	0	146
% Large 2 Axle Vehicles	0.8	2.3	0	1.9	4.7	3.5	1	3.4	3.2	1.6	0.7	2.6	0	0	2.5
3 Axle Vehicles	12	21		33	1	9		13	11	2		14	0	0	60
% 3 Axle Vehicles	2.3	1.7	0	1.9	0.6	4.5	2.9	2.7	0.4	0.2	0.7	0.4	0	0	1
4+ Axle Trucks	7	31		38	3	1		5	34	0		34	0	0	77
% 4+ Axle Trucks	1.4	2.6	0	2.2	1.8	0.5	1	1.1	1.4	0	0	0.9	0	0	1.3

	Live Oak Avenue Westbound			Baldwin Park Boulevard Northbound			Live Oak Avenue Eastbound			
Start Time	Left	Thru	App. Total	Left	Right	App. Total	Thru	Right	App. Total	Int. Total
Peak Hour Analysis From 04:00 PM to 05:45 PM - Peak 1 of 1										
Peak Hour for Entire Intersection Begins at 04:45 PM										
04:45 PM	65	159	224	21	21	42	303	172	475	741
05:00 PM	63	**173**	236	21	19	40	**356**	140	496	**772**
05:15 PM	**78**	167	**245**	12	**27**	39	276	137	413	697
05:30 PM	74	124	198	**23**	27	**50**	324	**174**	**498**	746
Total Volume	280	623	903	77	94	171	1259	623	1882	2956
% App. Total	31	69		45	55		66.9	33.1		
PHF	.897	.900	.921	.837	.870	.855	.884	.895	.945	.957

Counts Unlimited
PO Box 1178
Corona, CA 92878
(951) 268-6268

City of Irwindale
N/S: Baldwin Park Boulevard
E/W: Live Oak Avenue
Weather: Clear

File Name : 11_IRW_BP Lo PM
Site Code : 05117783
Start Date : 11/28/2017

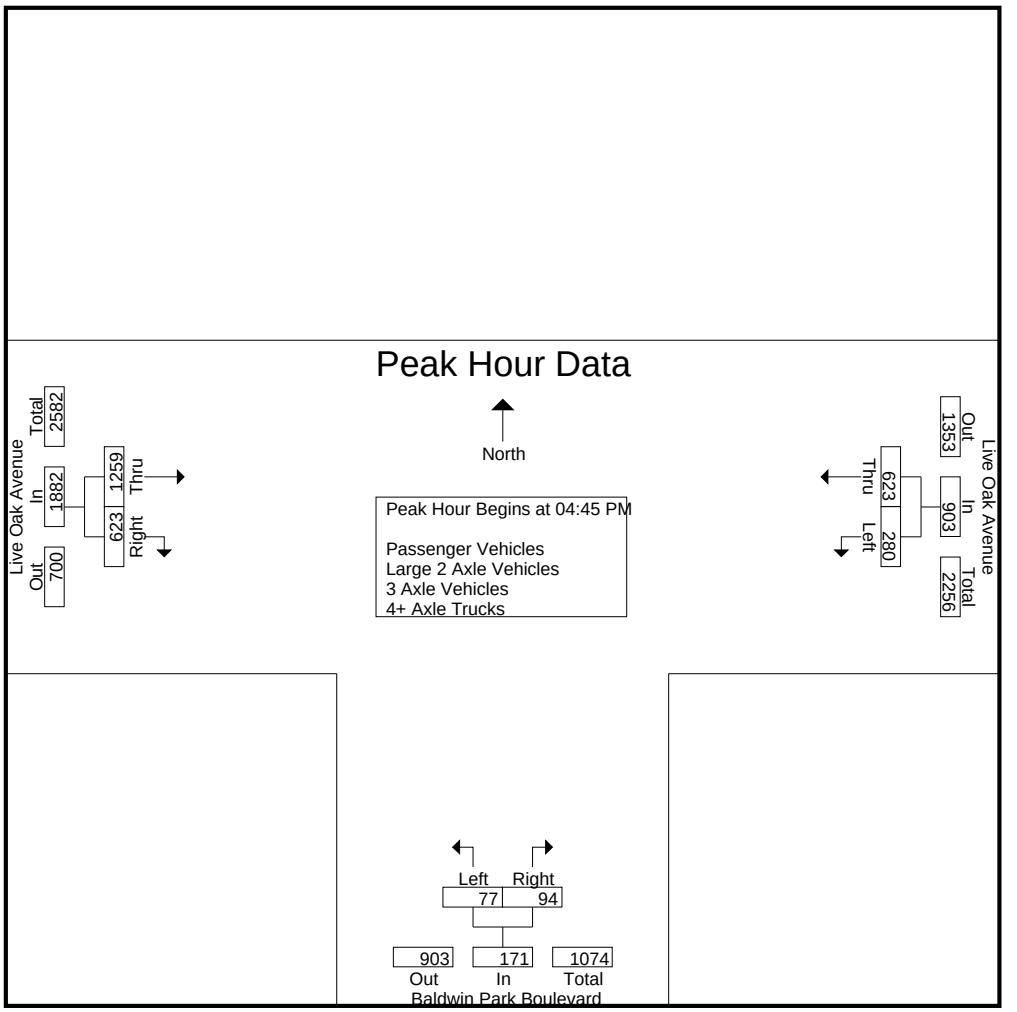

Peak Hour Analysis From 04:00 PM to 05:45 PM - Peak 1 of 1
Peak Hour for Each Approach Begins at:

	04:30 PM			04:00 PM			04:45 PM		
+0 mins.	59	159	218	26	**29**	**55**	303	172	475
+15 mins.	65	159	224	21	29	50	**356**	140	496
+30 mins.	63	**173**	236	**31**	22	53	276	137	413
+45 mins.	**78**	167	**245**	21	21	42	324	**174**	**498**
Total Volume	265	658	923	99	101	200	1259	623	1882
% App. Total	28.7	71.3		49.5	50.5		66.9	33.1	
PHF	.849	.951	.942	.798	.871	.909	.884	.895	.945

Counts Unlimited
PO Box 1178
Corona, CA 92878
(951) 268-6268

City of Irwindale
N/S: Baldwin Park Boulevard
E/W: Live Oak Avenue
Weather: Clear

File Name : 11_IRW_BP Lo PM
Site Code : 05117783
Start Date : 11/28/2017
Page No : 1

Groups Printed- Passenger Vehicles

	Live Oak Avenue Westbound				Baldwin Park Boulevard Northbound				Live Oak Avenue Eastbound						
Start Time	Left	Thru	RTOR	App. Total	Left	Right	RTOR	App. Total	Thru	Right	RTOR	App. Total	Exclu. Total	Inclu. Total	Int. Total
04:00 PM	54	128	0	182	23	26	13	49	263	85	6	348	19	579	598
04:15 PM	51	123	0	174	19	24	13	43	272	125	6	397	19	614	633
04:30 PM	53	147	0	200	30	20	14	50	300	143	19	443	33	693	726
04:45 PM	63	151	0	214	20	21	10	41	289	169	25	458	35	713	748
Total	221	549	0	770	92	91	50	183	1124	522	56	1646	106	2599	2705
05:00 PM	61	167	0	228	18	15	4	33	340	138	15	478	19	739	758
05:15 PM	76	154	0	230	12	26	16	38	270	135	29	405	45	673	718
05:30 PM	71	120	0	191	23	27	14	50	310	172	23	482	37	723	760
05:45 PM	66	132	0	198	13	24	14	37	290	136	15	426	29	661	690
Total	274	573	0	847	66	92	48	158	1210	581	82	1791	130	2796	2926
Grand Total	495	1122	0	1617	158	183	98	341	2334	1103	138	3437	236	5395	5631
Apprch %	30.6	69.4			46.3	53.7			67.9	32.1					
Total %	9.2	20.8		30	2.9	3.4		6.3	43.3	20.4		63.7	4.2	95.8	

	Live Oak Avenue Westbound			Baldwin Park Boulevard Northbound			Live Oak Avenue Eastbound			
Start Time	Left	Thru	App. Total	Left	Right	App. Total	Thru	Right	App. Total	Int. Total
Peak Hour Analysis From 04:45 PM to 05:30 PM - Peak 1 of 1										
Peak Hour for Entire Intersection Begins at 04:45 PM										
04:45 PM	63	151	214	20	21	41	289	169	458	713
05:00 PM	61	**167**	228	18	15	33	**340**	138	478	**739**
05:15 PM	**76**	154	**230**	12	26	38	270	135	405	673
05:30 PM	71	120	191	**23**	**27**	**50**	310	**172**	**482**	723
Total Volume	271	592	863	73	89	162	1209	614	1823	2848
% App. Total	31.4	68.6		45.1	54.9		66.3	33.7		
PHF	.891	.886	.938	.793	.824	.810	.889	.892	.946	.963

Counts Unlimited
PO Box 1178
Corona, CA 92878
(951) 268-6268

City of Irwindale
N/S: Baldwin Park Boulevard
E/W: Live Oak Avenue
Weather: Clear

File Name : 11_IRW_BP Lo PM
Site Code : 05117783
Start Date : 11/28/2017
Page No : 2

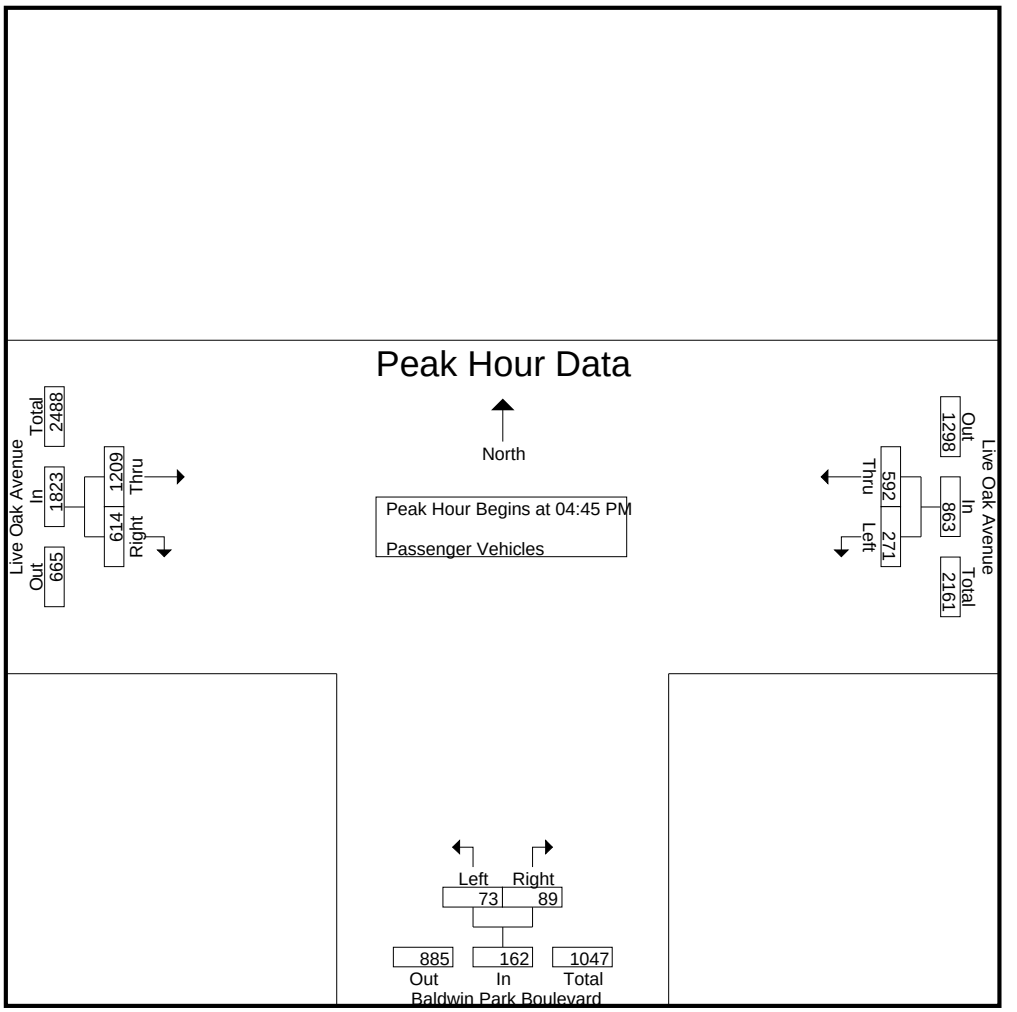

Peak Hour Analysis From 04:45 PM to 05:30 PM - Peak 1 of 1
Peak Hour for Each Approach Begins at:

	04:45 PM			04:45 PM			04:45 PM		
+0 mins.	63	151	214	20	21	41	289	169	458
+15 mins.	61	**167**	228	18	15	33	**340**	138	478
+30 mins.	**76**	154	**230**	12	26	38	270	135	405
+45 mins.	71	120	191	**23**	**27**	**50**	310	**172**	**482**
Total Volume	271	592	863	73	89	162	1209	614	1823
% App. Total	31.4	68.6		45.1	54.9		66.3	33.7	
PHF	.891	.886	.938	.793	.824	.810	.889	.892	.946

Counts Unlimited
PO Box 1178
Corona, CA 92878
(951) 268-6268

City of Irwindale
N/S: Baldwin Park Boulevard
E/W: Live Oak Avenue
Weather: Clear

File Name : 11_IRW_BP Lo PM
Site Code : 05117783
Start Date : 11/28/2017
Page No : 1

Groups Printed- Large 2 Axle Vehicles

	Live Oak Avenue Westbound				Baldwin Park Boulevard Northbound				Live Oak Avenue Eastbound						
Start Time	Left	Thru	RTOR	App. Total	Left	Right	RTOR	App. Total	Thru	Right	RTOR	App. Total	Exclu. Total	Inclu. Total	Int. Total
04:00 PM	0	2	0	2	3	1	0	4	16	4	0	20	0	26	26
04:15 PM	1	5	0	6	1	4	1	5	9	5	0	14	1	25	26
04:30 PM	0	4	0	4	1	0	0	1	12	1	0	13	0	18	18
04:45 PM	1	3	0	4	1	0	0	1	9	2	0	11	0	16	16
Total	2	14	0	16	6	5	1	11	46	12	0	58	1	85	86
05:00 PM	0	2	0	2	1	1	0	2	11	2	0	13	0	17	17
05:15 PM	1	7	0	8	0	1	0	1	6	2	0	8	0	17	17
05:30 PM	1	3	0	4	0	0	0	0	9	2	1	11	1	15	16
05:45 PM	0	2	0	2	1	0	0	1	7	0	0	7	0	10	10
Total	2	14	0	16	2	2	0	4	33	6	1	39	1	59	60
Grand Total	4	28	0	32	8	7	1	15	79	18	1	97	2	144	146
Apprch %	12.5	87.5			53.3	46.7			81.4	18.6					
Total %	2.8	19.4		22.2	5.6	4.9		10.4	54.9	12.5		67.4	1.4	98.6	

	Live Oak Avenue Westbound			Baldwin Park Boulevard Northbound			Live Oak Avenue Eastbound			
Start Time	Left	Thru	App. Total	Left	Right	App. Total	Thru	Right	App. Total	Int. Total
Peak Hour Analysis From 04:45 PM to 05:30 PM - Peak 1 of 1										
Peak Hour for Entire Intersection Begins at 04:45 PM										
04:45 PM	**1**	3	4	**1**	0	1	9	**2**	11	16
05:00 PM	0	2	2	1	**1**	**2**	**11**	2	**13**	**17**
05:15 PM	1	**7**	**8**	0	1	1	6	2	8	17
05:30 PM	1	3	4	0	0	0	9	2	11	15
Total Volume	3	15	18	2	2	4	35	8	43	65
% App. Total	16.7	83.3		50	50		81.4	18.6		
PHF	.750	.536	.563	.500	.500	.500	.795	1.00	.827	.956

Counts Unlimited
PO Box 1178
Corona, CA 92878
(951) 268-6268

City of Irwindale
N/S: Baldwin Park Boulevard
E/W: Live Oak Avenue
Weather: Clear

File Name : 11_IRW_BP Lo PM
Site Code : 05117783
Start Date : 11/28/2017
Page No : 2

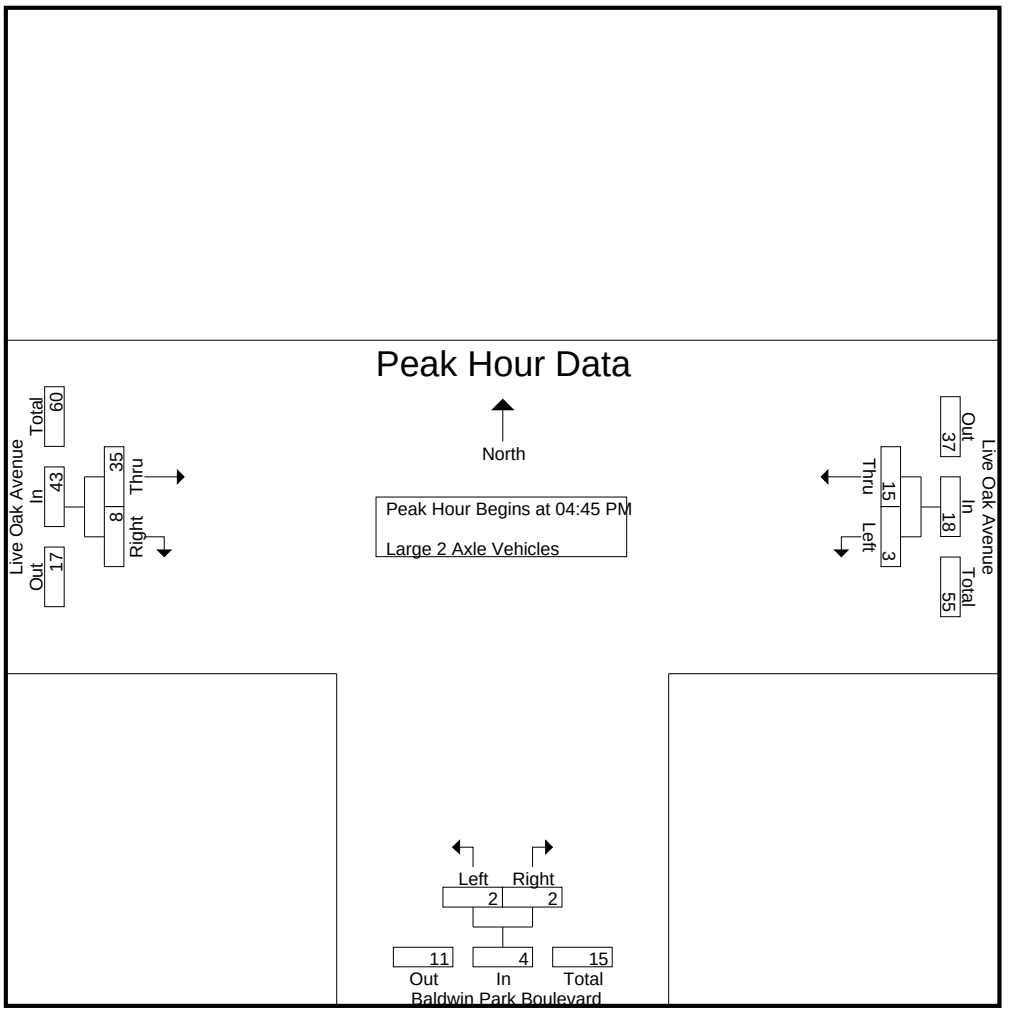

Peak Hour Analysis From 04:45 PM to 05:30 PM - Peak 1 of 1
Peak Hour for Each Approach Begins at:

	04:45 PM			04:45 PM			04:45 PM		
+0 mins.	**1**	3	4	**1**	0	1	9	**2**	11
+15 mins.	0	2	2	1	**1**	**2**	**11**	2	**13**
+30 mins.	1	**7**	**8**	0	1	1	6	2	8
+45 mins.	1	3	4	0	0	0	9	2	11
Total Volume	3	15	18	2	2	4	35	8	43
% App. Total	16.7	83.3		50	50		81.4	18.6	
PHF	.750	.536	.563	.500	.500	.500	.795	1.000	.827

Counts Unlimited
PO Box 1178
Corona, CA 92878
(951) 268-6268

City of Irwindale
N/S: Baldwin Park Boulevard
E/W: Live Oak Avenue
Weather: Clear

File Name : 11_IRW_BP Lo PM
Site Code : 05117783
Start Date : 11/28/2017
Page No : 1

Groups Printed- 3 Axle Vehicles

	Live Oak Avenue Westbound				Baldwin Park Boulevard Northbound				Live Oak Avenue Eastbound						
Start Time	Left	Thru	RTOR	App. Total	Left	Right	RTOR	App. Total	Thru	Right	RTOR	App. Total	Exclu. Total	Inclu. Total	Int. Total
04:00 PM	4	5	0	9	0	2	0	2	3	0	0	3	0	14	14
04:15 PM	1	6	0	7	0	0	0	0	3	0	0	3	0	10	10
04:30 PM	3	2	0	5	0	2	1	2	2	1	0	3	1	10	11
04:45 PM	0	1	0	1	0	0	0	0	1	1	1	2	1	3	4
Total	8	14	0	22	0	4	1	4	9	2	1	11	2	37	39
05:00 PM	1	1	0	2	0	3	1	3	1	0	0	1	1	6	7
05:15 PM	1	1	0	2	0	0	0	0	0	0	0	0	0	2	2
05:30 PM	2	1	0	3	0	0	0	0	1	0	0	1	0	4	4
05:45 PM	0	4	0	4	1	2	1	3	0	0	0	0	1	7	8
Total	4	7	0	11	1	5	2	6	2	0	0	2	2	19	21
Grand Total	12	21	0	33	1	9	3	10	11	2	1	13	4	56	60
Apprch %	36.4	63.6			10	90			84.6	15.4					
Total %	21.4	37.5		58.9	1.8	16.1		17.9	19.6	3.6		23.2	6.7	93.3	

	Live Oak Avenue Westbound			Baldwin Park Boulevard Northbound			Live Oak Avenue Eastbound			
Start Time	Left	Thru	App. Total	Left	Right	App. Total	Thru	Right	App. Total	Int. Total
Peak Hour Analysis From 04:45 PM to 05:30 PM - Peak 1 of 1										
Peak Hour for Entire Intersection Begins at 04:45 PM										
04:45 PM	0	**1**	1	0	0	0	**1**	**1**	**2**	3
05:00 PM	1	1	2	0	**3**	**3**	1	0	1	**6**
05:15 PM	1	1	2	0	0	0	0	0	0	2
05:30 PM	**2**	1	**3**	0	0	0	1	0	1	4
Total Volume	4	4	8	0	3	3	3	1	4	15
% App. Total	50	50		0	100		75	25		
PHF	.500	1.00	.667	.000	.250	.250	.750	.250	.500	.625

Counts Unlimited
PO Box 1178
Corona, CA 92878
(951) 268-6268

City of Irwindale
N/S: Baldwin Park Boulevard
E/W: Live Oak Avenue
Weather: Clear

File Name : 11_IRW_BP Lo PM
Site Code : 05117783
Start Date : 11/28/2017

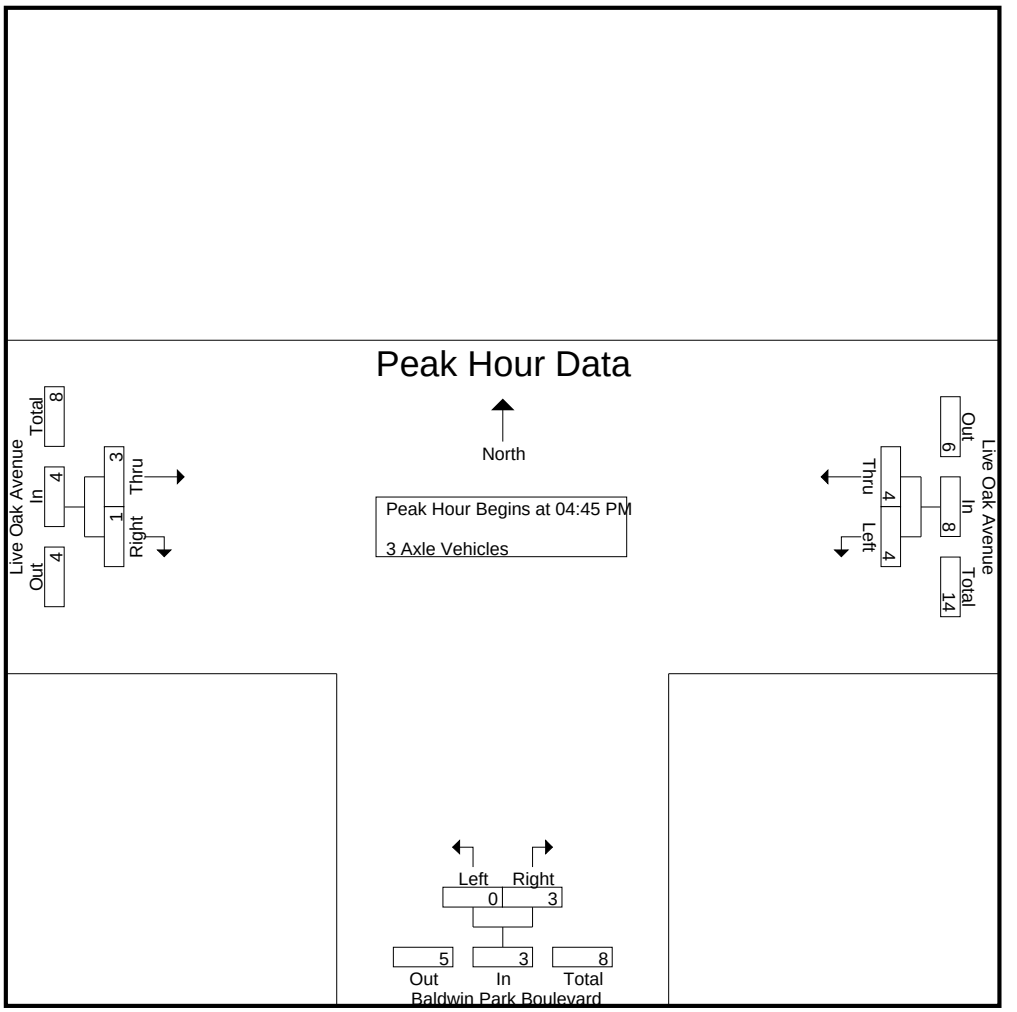

Peak Hour Analysis From 04:45 PM to 05:30 PM - Peak 1 of 1
Peak Hour for Each Approach Begins at:

	04:45 PM			04:45 PM			04:45 PM		
+0 mins.	0	**1**	1	0	0	0	**1**	**1**	**2**
+15 mins.	1	1	2	0	**3**	**3**	1	0	1
+30 mins.	1	1	2	0	0	0	0	0	0
+45 mins.	**2**	1	**3**	0	0	0	1	0	1
Total Volume	4	4	8	0	3	3	3	1	4
% App. Total	50	50		0	100		75	25	
PHF	.500	1.000	.667	.000	.250	.250	.750	.250	.500

Counts Unlimited
PO Box 1178
Corona, CA 92878
(951) 268-6268

City of Irwindale
N/S: Baldwin Park Boulevard
E/W: Live Oak Avenue
Weather: Clear

File Name : 11_IRW_BP Lo PM
Site Code : 05117783
Start Date : 11/28/2017
Page No : 1

Groups Printed- 4+ Axle Trucks

	Live Oak Avenue Westbound				Baldwin Park Boulevard Northbound				Live Oak Avenue Eastbound						
Start Time	Left	Thru	RTOR	App. Total	Left	Right	RTOR	App. Total	Thru	Right	RTOR	App. Total	Exclu. Total	Inclu. Total	Int. Total
04:00 PM	0	5	0	5	0	0	0	0	10	0	0	10	0	15	15
04:15 PM	1	8	0	9	1	1	1	2	4	0	0	4	1	15	16
04:30 PM	3	6	0	9	0	0	0	0	6	0	0	6	0	15	15
04:45 PM	1	4	0	5	0	0	0	0	4	0	0	4	0	9	9
Total	5	23	0	28	1	1	1	2	24	0	0	24	1	54	55
05:00 PM	1	3	0	4	2	0	0	2	4	0	0	4	0	10	10
05:15 PM	0	5	0	5	0	0	0	0	0	0	0	0	0	5	5
05:30 PM	0	0	0	0	0	0	0	0	4	0	0	4	0	4	4
05:45 PM	1	0	0	1	0	0	0	0	2	0	0	2	0	3	3
Total	2	8	0	10	2	0	0	2	10	0	0	10	0	22	22
Grand Total	7	31	0	38	3	1	1	4	34	0	0	34	1	76	77
Apprch %	18.4	81.6			75	25			100	0					
Total %	9.2	40.8		50	3.9	1.3		5.3	44.7	0		44.7	1.3	98.7	

	Live Oak Avenue Westbound			Baldwin Park Boulevard Northbound			Live Oak Avenue Eastbound			
Start Time	Left	Thru	App. Total	Left	Right	App. Total	Thru	Right	App. Total	Int. Total
Peak Hour Analysis From 04:45 PM to 05:30 PM - Peak 1 of 1										
Peak Hour for Entire Intersection Begins at 04:45 PM										
04:45 PM	**1**	4	**5**	0	0	0	**4**	0	**4**	9
05:00 PM	1	3	4	**2**	0	**2**	4	0	4	**10**
05:15 PM	0	**5**	5	0	0	0	0	0	0	5
05:30 PM	0	0	0	0	0	0	4	0	4	4
Total Volume	2	12	14	2	0	2	12	0	12	28
% App. Total	14.3	85.7		100	0		100	0		
PHF	.500	.600	.700	.250	.000	.250	.750	.000	.750	.700

Counts Unlimited
PO Box 1178
Corona, CA 92878
(951) 268-6268

City of Irwindale
N/S: Baldwin Park Boulevard
E/W: Live Oak Avenue
Weather: Clear

File Name : 11_IRW_BP Lo PM
Site Code : 05117783
Start Date : 11/28/2017
Page No : 2

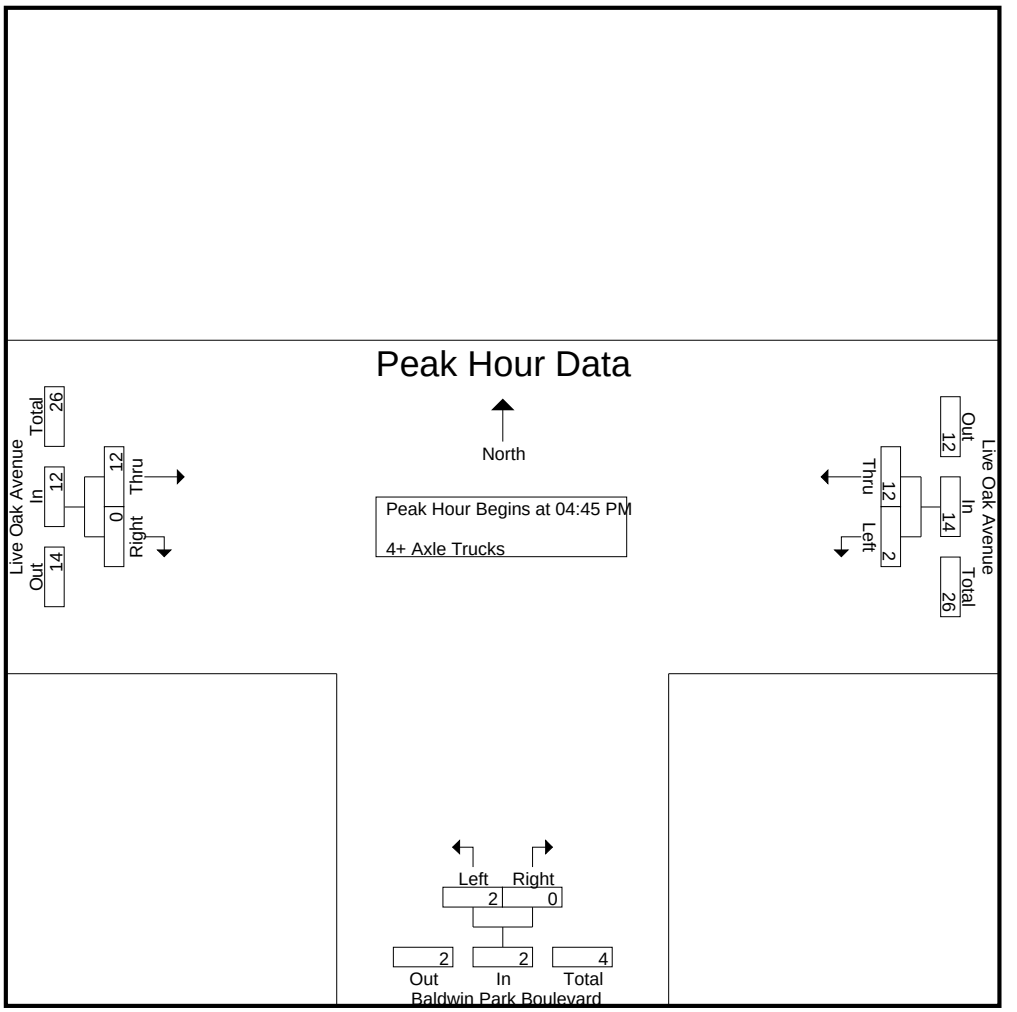

Peak Hour Analysis From 04:45 PM to 05:30 PM - Peak 1 of 1
Peak Hour for Each Approach Begins at:

	04:45 PM			04:45 PM			04:45 PM		
+0 mins.	**1**	4	**5**	0	0	0	**4**	0	**4**
+15 mins.	1	3	4	**2**	0	**2**	4	0	4
+30 mins.	0	**5**	5	0	0	0	0	0	0
+45 mins.	0	0	0	0	0	0	4	0	4
Total Volume	2	12	14	2	0	2	12	0	12
% App. Total	14.3	85.7		100	0		100	0	
PHF	.500	.600	.700	.250	.000	.250	.750	.000	.750

Location: Irwindale
N/S: Baldwin Park Boulevard
E/W: Live Oak Avenue

Date: 11/28/2017
Day: Tuesday

PEDESTRIANS

	North Leg Dead End	East Leg Live Oak Avenue	South Leg Baldwin Park Boulevard	West Leg Live Oak Avenue	TOTAL
7:00 AM	0	0	0	0	0
7:15 AM	0	0	0	0	0
7:30 AM	0	0	0	0	0
7:45 AM	0	0	0	0	0
8:00 AM	0	0	1	0	1
8:15 AM	0	0	0	0	0
8:30 AM	0	0	0	0	0
8:45 AM	0	0	0	0	0
TOTAL VOLUMES:	0	0	1	0	1

	North Leg Dead End	East Leg Live Oak Avenue	South Leg Baldwin Park Boulevard	West Leg Live Oak Avenue	TOTAL
4:00 PM	0	0	0	0	0
4:15 PM	0	0	0	0	0
4:30 PM	0	0	0	0	0
4:45 PM	0	0	0	0	0
5:00 PM	0	0	0	0	0
5:15 PM	0	0	0	0	0
5:30 PM	0	0	2	0	2
5:45 PM	0	0	0	0	0
TOTAL VOLUMES:	0	0	2	0	2

Counts Unlimited
P.O. Box 1178
Corona, CA 92878
(951) 268-6268

Location: Irwindale
N/S: Baldwin Park Boulevard
E/W: Live Oak Avenue



Date: 11/28/2017
Day: Tuesday

BICYCLES

	North Leg Dead End	East Leg Live Oak Avenue	South Leg Baldwin Park Boulevard	West Leg Live Oak Avenue	TOTAL
7:00 AM	0	0	0	0	0
7:15 AM	1	0	0	0	1
7:30 AM	0	0	0	0	0
7:45 AM	0	0	1	0	1
8:00 AM	0	0	0	0	0
8:15 AM	0	0	0	0	0
8:30 AM	0	0	1	0	1
8:45 AM	0	0	0	0	0
TOTAL VOLUMES:	1	0	2	0	3

	North Leg Dead End	East Leg Live Oak Avenue	South Leg Baldwin Park Boulevard	West Leg Live Oak Avenue	TOTAL
4:00 PM	0	0	1	0	1
4:15 PM	0	0	0	0	0
4:30 PM	0	0	0	0	0
4:45 PM	1	0	0	0	1
5:00 PM	0	0	0	0	0
5:15 PM	0	0	0	0	0
5:30 PM	0	0	0	0	0
5:45 PM	0	0	0	0	0
TOTAL VOLUMES:	1	0	1	0	2

Counts Unlimited
P.O. Box 1178
Corona, CA 92878
(951) 268-6268

Counts Unlimited
PO Box 1178
Corona, CA 92878
(951) 268-6268

City of Irwindale
N/S: Arrow Highway
E/W: Live Oak Avenue/Arrow Highway
Weather: Clear

File Name : 12_IRW_Ar Lo AM
Site Code : 05117783
Start Date : 11/28/2017
Page No : 1

Groups Printed- Passenger Vehicles - Large 2 Axle Vehicles - 3 Axle Vehicles - 4+ Axle Trucks

	Arrow Highway Southbound					Arrow Highway Westbound					Commercial Driveway Northbound					Live Oak Avenue Eastbound							
Start Time	Left	Thru	Right	RTOR	App. Total	Left	Thru	Right	RTOR	App. Total	Left	Thru	Right	RTOR	App. Total	Left	Thru	Right	RTOR	App. Total	Exclu. Total	Inclu. Total	Int. Total
07:00 AM	60	0	13	9	73	0	259	424	0	683	0	0	0	0	0	20	133	0	0	153	9	909	918
07:15 AM	56	0	17	9	73	0	298	514	1	812	0	0	0	0	0	25	133	0	0	158	10	1043	1053
07:30 AM	73	0	7	5	80	0	311	429	0	740	0	0	0	0	0	36	177	1	0	214	5	1034	1039
07:45 AM	107	0	22	7	129	0	249	405	0	654	0	0	0	0	0	32	191	0	0	223	7	1006	1013
Total	296	0	59	30	355	0	1117	1772	1	2889	0	0	0	0	0	113	634	1	0	748	31	3992	4023
08:00 AM	91	0	20	11	111	0	248	342	0	590	0	0	0	0	0	27	179	0	0	206	11	907	918
08:15 AM	88	0	27	14	115	0	228	281	1	509	0	0	0	0	0	15	176	0	0	191	15	815	830
08:30 AM	81	0	8	5	89	0	242	252	0	494	0	0	0	0	0	13	145	0	0	158	5	741	746
08:45 AM	71	0	8	4	79	0	196	231	0	427	0	0	0	0	0	22	178	0	0	200	4	706	710
Total	331	0	63	34	394	0	914	1106	1	2020	0	0	0	0	0	77	678	0	0	755	35	3169	3204
Grand Total	627	0	122	64	749	0	2031	2878	2	4909	0	0	0	0	0	190	1312	1	0	1503	66	7161	7227
Apprch %	83.7	0	16.3			0	41.4	58.6			0	0	0			12.6	87.3	0.1					
Total %	8.8	0	1.7		10.5	0	28.4	40.2		68.6	0	0	0		0	2.7	18.3	0		21	0.9	99.1	
Passenger Vehicles	575	0	113		749	0	1766	2744		4512	0	0	0		0	181	1082	0		1263	0	0	6524
% Passenger Vehicles	91.7	0	92.6	95.3	92.1	0	87	95.3	100	91.9	0	0	0	0	0	95.3	82.5	0	0	84	0	0	90.3
Large 2 Axle Vehicles	39	0	7		49	0	132	80		212	0	0	0		0	5	79	0		84	0	0	345
% Large 2 Axle Vehicles	6.2	0	5.7	4.7	6	0	6.5	2.8	0	4.3	0	0	0	0	0	2.6	6	0	0	5.6	0	0	4.8
3 Axle Vehicles	8	0	1		9	0	36	18		54	0	0	0		0	2	41	1		44	0	0	107
% 3 Axle Vehicles	1.3	0	0.8	0	1.1	0	1.8	0.6	0	1.1	0	0	0	0	0	1.1	3.1	100	0	2.9	0	0	1.5
4+ Axle Trucks	5	0	1		6	0	97	36		133	0	0	0		0	2	110	0		112	0	0	251
% 4+ Axle Trucks	0.8	0	0.8	0	0.7	0	4.8	1.3	0	2.7	0	0	0	0	0	1.1	8.4	0	0	7.5	0	0	3.5

	Arrow Highway Southbound				Arrow Highway Westbound				Commercial Driveway Northbound				Live Oak Avenue Eastbound				
Start Time	Left	Thru	Right	App. Total	Left	Thru	Right	App. Total	Left	Thru	Right	App. Total	Left	Thru	Right	App. Total	Int. Total
Peak Hour Analysis From 07:00 AM to 08:45 AM - Peak 1 of 1																	
Peak Hour for Entire Intersection Begins at 07:00 AM																	
07:00 AM	60	0	13	73	0	259	424	683	0	0	0	0	20	133	0	153	909
07:15 AM	56	0	17	73	0	298	**514**	**812**	0	0	0	0	25	133	0	158	**1043**
07:30 AM	73	0	7	80	0	**311**	429	740	0	0	0	0	**36**	177	**1**	214	1034
07:45 AM	**107**	0	**22**	**129**	0	249	405	654	0	0	0	0	32	**191**	0	**223**	1006
Total Volume	296	0	59	355	0	1117	1772	2889	0	0	0	0	113	634	1	748	3992
% App. Total	83.4	0	16.6		0	38.7	61.3		0	0	0		15.1	84.8	0.1		
PHF	.692	.000	.670	.688	.000	.898	.862	.889	.000	.000	.000	.000	.785	.830	.250	.839	.957

Counts Unlimited
PO Box 1178
Corona, CA 92878
(951) 268-6268

City of Irwindale
N/S: Arrow Highway
E/W: Live Oak Avenue/Arrow Highway
Weather: Clear

File Name : 12_IRW_Ar Lo AM
Site Code : 05117783
Start Date : 11/28/2017
Page No : 2

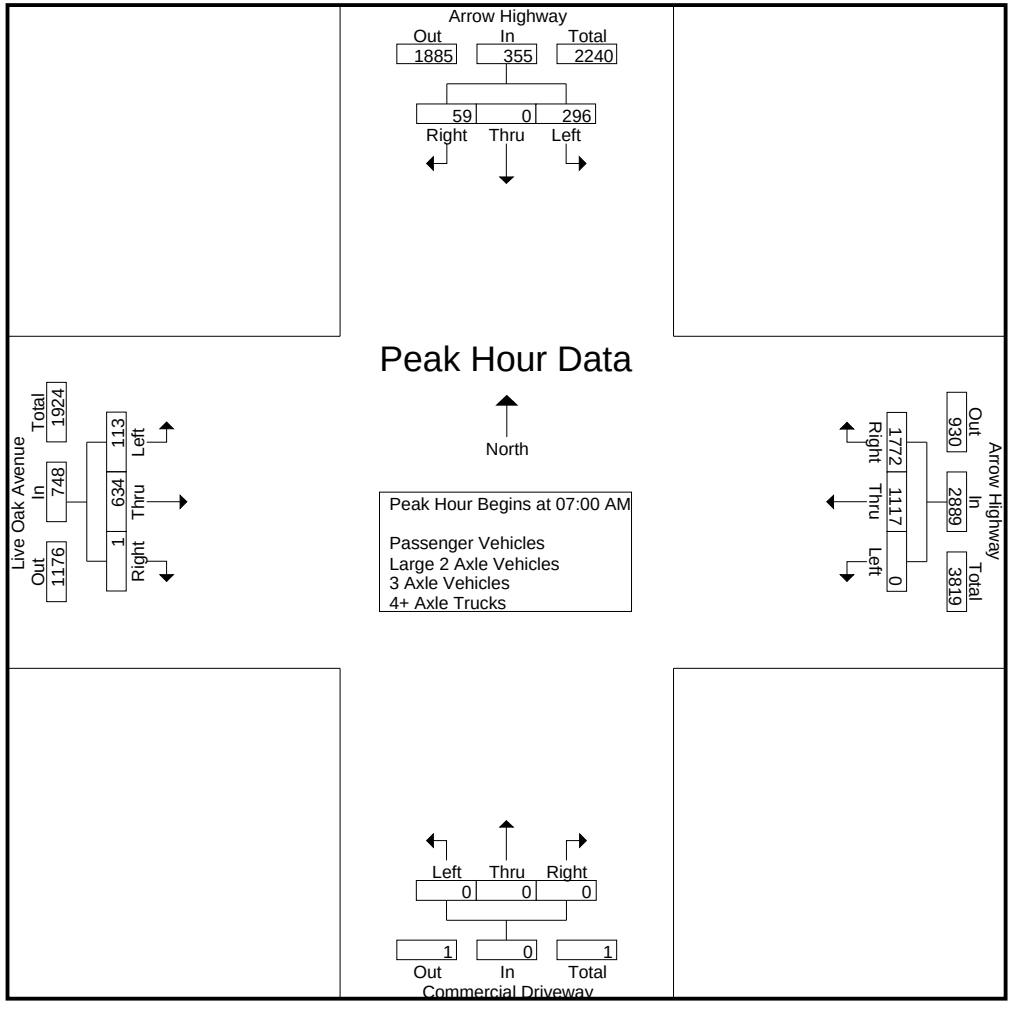

Counts Unlimited
PO Box 1178
Corona, CA 92878
(951) 268-6268

City of Irwindale
N/S: Arrow Highway
E/W: Live Oak Avenue/Arrow Highway
Weather: Clear

File Name : 12_IRW_Ar Lo AM
Site Code : 05117783
Start Date : 11/28/2017
Page No : 3

	Arrow Highway Southbound				Arrow Highway Westbound				Commercial Driveway Northbound				Live Oak Avenue Eastbound				
Start Time	Left	Thru	Right	App. Total	Left	Thru	Right	App. Total	Left	Thru	Right	App. Total	Left	Thru	Right	App. Total	Int. Total
Peak Hour Analysis From 07:00 AM to 08:45 AM - Peak 1 of 1																	
Peak Hour for Each Approach Begins at:																	
	07:45 AM				07:00 AM				07:00 AM				07:30 AM				
+0 mins.	**107**	0	22	**129**	0	259	424	683	0	0	0	0	**36**	177	**1**	214	
+15 mins.	91	0	20	111	0	298	**514**	**812**	0	0	0	0	32	**191**	0	**223**	
+30 mins.	88	0	**27**	115	0	**311**	429	740	0	0	0	0	27	179	0	206	
+45 mins.	81	0	8	89	0	249	405	654	0	0	0	0	15	176	0	191	
Total Volume	367	0	77	444	0	1117	1772	2889	0	0	0	0	110	723	1	834	
% App. Total	82.7	0	17.3		0	38.7	61.3		0	0	0		13.2	86.7	0.1		
PHF	.857	.000	.713	.860	.000	.898	.862	.889	.000	.000	.000	.000	.764	.946	.250	.935	

Counts Unlimited
PO Box 1178
Corona, CA 92878
(951) 268-6268

City of Irwindale
N/S: Arrow Highway
E/W: Live Oak Avenue/Arrow Highway
Weather: Clear

File Name : 12_IRW_Ar Lo AM
Site Code : 05117783
Start Date : 11/28/2017
Page No : 1

Groups Printed- Passenger Vehicles

	Arrow Highway Southbound					Arrow Highway Westbound					Commercial Driveway Northbound					Live Oak Avenue Eastbound							
Start Time	Left	Thru	Right	RTOR	App. Total	Left	Thru	Right	RTOR	App. Total	Left	Thru	Right	RTOR	App. Total	Left	Thru	Right	RTOR	App. Total	Exclu. Total	Inclu. Total	Int. Total
07:00 AM	52	0	11	8	63	0	243	405	0	648	0	0	0	0	0	20	106	0	0	126	8	837	845
07:15 AM	52	0	16	9	68	0	267	480	1	747	0	0	0	0	0	23	114	0	0	137	10	952	962
07:30 AM	71	0	6	4	77	0	273	413	0	686	0	0	0	0	0	33	147	0	0	180	4	943	947
07:45 AM	97	0	21	7	118	0	218	389	0	607	0	0	0	0	0	31	164	0	0	195	7	920	927
Total	272	0	54	28	326	0	1001	1687	1	2688	0	0	0	0	0	107	531	0	0	638	29	3652	3681
08:00 AM	82	0	20	11	102	0	217	329	0	546	0	0	0	0	0	27	153	0	0	180	11	828	839
08:15 AM	76	0	24	14	100	0	189	271	1	460	0	0	0	0	0	14	138	0	0	152	15	712	727
08:30 AM	78	0	8	5	86	0	199	242	0	441	0	0	0	0	0	13	120	0	0	133	5	660	665
08:45 AM	67	0	7	3	74	0	160	215	0	375	0	0	0	0	0	20	140	0	0	160	3	609	612
Total	303	0	59	33	362	0	765	1057	1	1822	0	0	0	0	0	74	551	0	0	625	34	2809	2843
Grand Total	575	0	113	61	688	0	1766	2744	2	4510	0	0	0	0	0	181	1082	0	0	1263	63	6461	6524
Apprch %	83.6	0	16.4			0	39.2	60.8			0	0	0			14.3	85.7	0					
Total %	8.9	0	1.7		10.6	0	27.3	42.5		69.8	0	0	0		0	2.8	16.7	0		19.5	1	99	

	Arrow Highway Southbound				Arrow Highway Westbound				Commercial Driveway Northbound				Live Oak Avenue Eastbound				
Start Time	Left	Thru	Right	App. Total	Left	Thru	Right	App. Total	Left	Thru	Right	App. Total	Left	Thru	Right	App. Total	Int. Total
Peak Hour Analysis From 07:00 AM to 07:45 AM - Peak 1 of 1																	
Peak Hour for Entire Intersection Begins at 07:00 AM																	
07:00 AM	52	0	11	63	0	243	405	648	0	0	0	0	20	106	0	126	837
07:15 AM	52	0	16	68	0	267	**480**	**747**	0	0	0	0	23	114	0	137	**952**
07:30 AM	71	0	6	77	0	**273**	413	686	0	0	0	0	**33**	147	0	180	943
07:45 AM	**97**	0	**21**	**118**	0	218	389	607	0	0	0	0	31	**164**	0	**195**	920
Total Volume	272	0	54	326	0	1001	1687	2688	0	0	0	0	107	531	0	638	3652
% App. Total	83.4	0	16.6		0	37.2	62.8		0	0	0		16.8	83.2	0		
PHF	.701	.000	.643	.691	.000	.917	.879	.900	.000	.000	.000	.000	.811	.809	.000	.818	.959

Counts Unlimited
PO Box 1178
Corona, CA 92878
(951) 268-6268

City of Irwindale
N/S: Arrow Highway
E/W: Live Oak Avenue/Arrow Highway
Weather: Clear

File Name : 12_IRW_Ar Lo AM
Site Code : 05117783
Start Date : 11/28/2017
Page No : 2

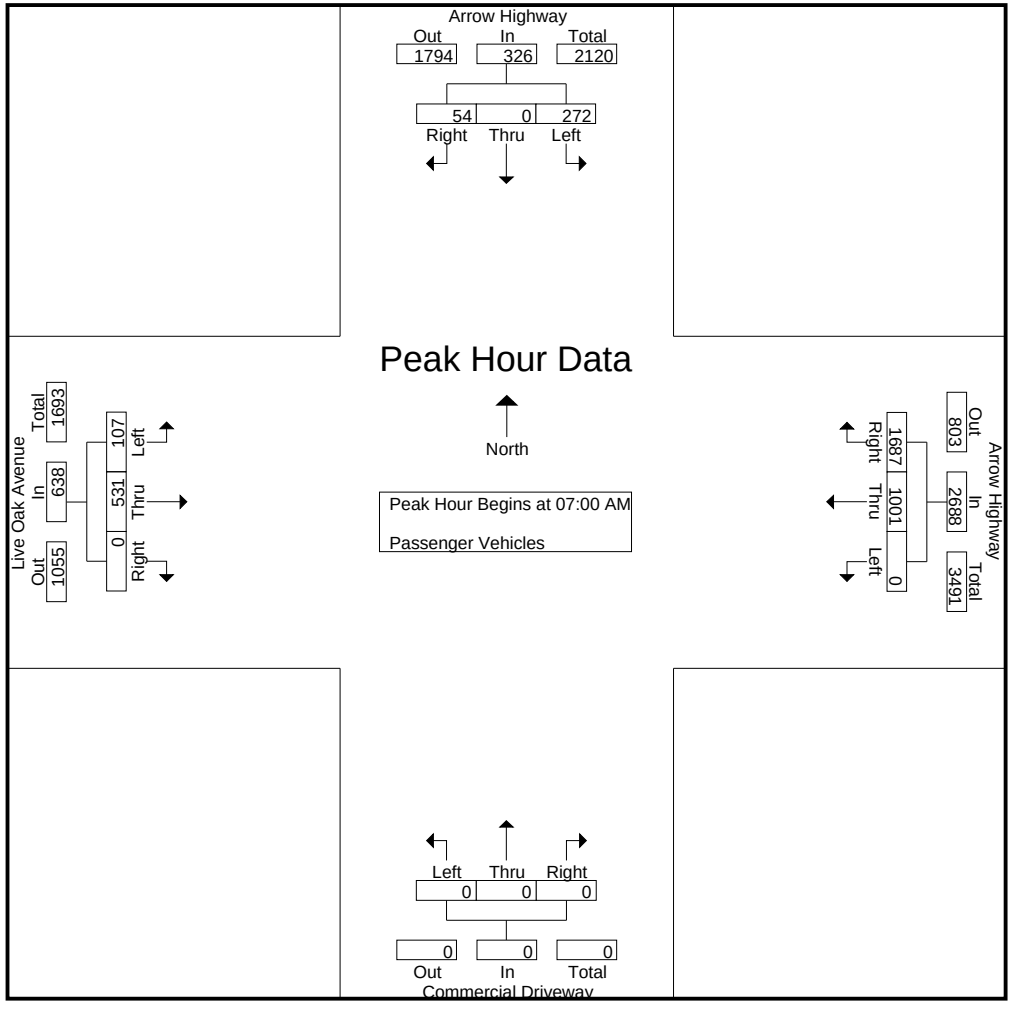

Counts Unlimited
PO Box 1178
Corona, CA 92878
(951) 268-6268

City of Irwindale
N/S: Arrow Highway
E/W: Live Oak Avenue/Arrow Highway
Weather: Clear

File Name : 12_IRW_Ar Lo AM
Site Code : 05117783
Start Date : 11/28/2017
Page No : 3

	Arrow Highway Southbound				Arrow Highway Westbound				Commercial Driveway Northbound				Live Oak Avenue Eastbound				
Start Time	Left	Thru	Right	App. Total	Left	Thru	Right	App. Total	Left	Thru	Right	App. Total	Left	Thru	Right	App. Total	Int. Total
Peak Hour Analysis From 07:00 AM to 07:45 AM - Peak 1 of 1																	
Peak Hour for Each Approach Begins at:																	
	07:00 AM				07:00 AM				07:00 AM				07:00 AM				
+0 mins.	52	0	11	63	0	243	405	648	0	0	0	0	20	106	0	126	
+15 mins.	52	0	16	68	0	267	**480**	**747**	0	0	0	0	23	114	0	137	
+30 mins.	71	0	6	77	0	**273**	413	686	0	0	0	0	**33**	147	0	180	
+45 mins.	**97**	0	**21**	**118**	0	218	389	607	0	0	0	0	31	**164**	0	**195**	
Total Volume	272	0	54	326	0	1001	1687	2688	0	0	0	0	107	531	0	638	
% App. Total	83.4	0	16.6		0	37.2	62.8		0	0	0		16.8	83.2	0		
PHF	.701	.000	.643	.691	.000	.917	.879	.900	.000	.000	.000	.000	.811	.809	.000	.818	

Counts Unlimited
PO Box 1178
Corona, CA 92878
(951) 268-6268

City of Irwindale
N/S: Arrow Highway
E/W: Live Oak Avenue/Arrow Highway
Weather: Clear

File Name : 12_IRW_Ar Lo AM
Site Code : 05117783
Start Date : 11/28/2017
Page No : 1

Groups Printed- Large 2 Axle Vehicles

	Arrow Highway Southbound					Arrow Highway Westbound					Commercial Driveway Northbound					Live Oak Avenue Eastbound							
Start Time	Left	Thru	Right	RTOR	App. Total	Left	Thru	Right	RTOR	App. Total	Left	Thru	Right	RTOR	App. Total	Left	Thru	Right	RTOR	App. Total	Exclu. Total	Inclu. Total	Int. Total
07:00 AM	6	0	2	1	8	0	10	13	0	23	0	0	0	0	0	0	8	0	0	8	1	39	40
07:15 AM	3	0	0	0	3	0	15	23	0	38	0	0	0	0	0	2	7	0	0	9	0	50	50
07:30 AM	2	0	1	1	3	0	23	10	0	33	0	0	0	0	0	1	8	0	0	9	1	45	46
07:45 AM	8	0	1	0	9	0	18	6	0	24	0	0	0	0	0	1	9	0	0	10	0	43	43
Total	19	0	4	2	23	0	66	52	0	118	0	0	0	0	0	4	32	0	0	36	2	177	179
08:00 AM	6	0	0	0	6	0	10	4	0	14	0	0	0	0	0	0	11	0	0	11	0	31	31
08:15 AM	11	0	2	0	13	0	22	6	0	28	0	0	0	0	0	0	17	0	0	17	0	58	58
08:30 AM	1	0	0	0	1	0	17	7	0	24	0	0	0	0	0	0	5	0	0	5	0	30	30
08:45 AM	2	0	1	1	3	0	17	11	0	28	0	0	0	0	0	1	14	0	0	15	1	46	47
Total	20	0	3	1	23	0	66	28	0	94	0	0	0	0	0	1	47	0	0	48	1	165	166
Grand Total	39	0	7	3	46	0	132	80	0	212	0	0	0	0	0	5	79	0	0	84	3	342	345
Apprch %	84.8	0	15.2			0	62.3	37.7			0	0	0			6	94	0					
Total %	11.4	0	2		13.5	0	38.6	23.4		62	0	0	0		0	1.5	23.1	0		24.6	0.9	99.1	

	Arrow Highway Southbound				Arrow Highway Westbound				Commercial Driveway Northbound				Live Oak Avenue Eastbound				
Start Time	Left	Thru	Right	App. Total	Left	Thru	Right	App. Total	Left	Thru	Right	App. Total	Left	Thru	Right	App. Total	Int. Total
Peak Hour Analysis From 07:00 AM to 07:45 AM - Peak 1 of 1																	
Peak Hour for Entire Intersection Begins at 07:00 AM																	
07:00 AM	6	0	**2**	8	0	10	13	23	0	0	0	0	0	8	0	8	39
07:15 AM	3	0	0	3	0	15	**23**	**38**	0	0	0	0	**2**	7	0	9	**50**
07:30 AM	2	0	1	3	0	**23**	10	33	0	0	0	0	1	8	0	9	45
07:45 AM	**8**	0	1	**9**	0	18	6	24	0	0	0	0	1	**9**	0	**10**	43
Total Volume	19	0	4	23	0	66	52	118	0	0	0	0	4	32	0	36	177
% App. Total	82.6	0	17.4		0	55.9	44.1		0	0	0		11.1	88.9	0		
PHF	.594	.000	.500	.639	.000	.717	.565	.776	.000	.000	.000	.000	.500	.889	.000	.900	.885

Counts Unlimited
PO Box 1178
Corona, CA 92878
(951) 268-6268

City of Irwindale
N/S: Arrow Highway
E/W: Live Oak Avenue/Arrow Highway
Weather: Clear

File Name : 12_IRW_Ar Lo AM
Site Code : 05117783
Start Date : 11/28/2017
Page No : 2

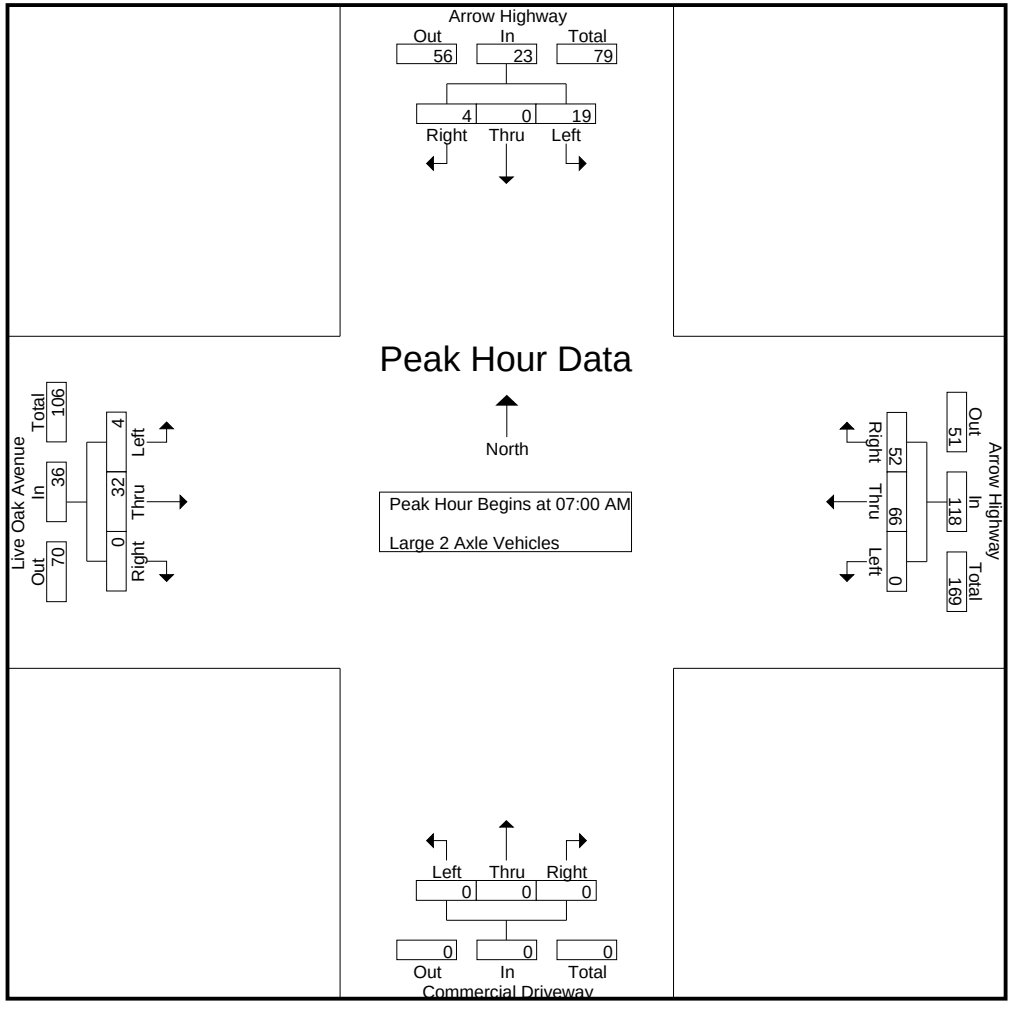

Counts Unlimited
PO Box 1178
Corona, CA 92878
(951) 268-6268

City of Irwindale
N/S: Arrow Highway
E/W: Live Oak Avenue/Arrow Highway
Weather: Clear

File Name : 12_IRW_Ar Lo AM
Site Code : 05117783
Start Date : 11/28/2017
Page No : 3

	Arrow Highway Southbound				Arrow Highway Westbound				Commercial Driveway Northbound				Live Oak Avenue Eastbound				
Start Time	Left	Thru	Right	App. Total	Left	Thru	Right	App. Total	Left	Thru	Right	App. Total	Left	Thru	Right	App. Total	Int. Total
Peak Hour Analysis From 07:00 AM to 07:45 AM - Peak 1 of 1																	
Peak Hour for Each Approach Begins at:																	
	07:00 AM				07:00 AM				07:00 AM				07:00 AM				
+0 mins.	6	0	**2**	8	0	10	13	23	0	0	0	0	0	8	0	8	
+15 mins.	3	0	0	3	0	15	**23**	**38**	0	0	0	0	**2**	7	0	9	
+30 mins.	2	0	1	3	0	**23**	10	33	0	0	0	0	1	8	0	9	
+45 mins.	**8**	0	1	**9**	0	18	6	24	0	0	0	0	1	**9**	0	**10**	
Total Volume	19	0	4	23	0	66	52	118	0	0	0	0	4	32	0	36	
% App. Total	82.6	0	17.4		0	55.9	44.1		0	0	0		11.1	88.9	0		
PHF	.594	.000	.500	.639	.000	.717	.565	.776	.000	.000	.000	.000	.500	.889	.000	.900	

Counts Unlimited
PO Box 1178
Corona, CA 92878
(951) 268-6268

City of Irwindale
N/S: Arrow Highway
E/W: Live Oak Avenue/Arrow Highway
Weather: Clear

File Name : 12_IRW_Ar Lo AM
Site Code : 05117783
Start Date : 11/28/2017
Page No : 1

Groups Printed- 3 Axle Vehicles

	Arrow Highway Southbound					Arrow Highway Westbound					Commercial Driveway Northbound					Live Oak Avenue Eastbound							
Start Time	Left	Thru	Right	RTOR	App. Total	Left	Thru	Right	RTOR	App. Total	Left	Thru	Right	RTOR	App. Total	Left	Thru	Right	RTOR	App. Total	Exclu. Total	Inclu. Total	Int. Total
07:00 AM	2	0	0	0	2	0	3	2	0	5	0	0	0	0	0	0	3	0	0	3	0	10	10
07:15 AM	0	0	1	0	1	0	1	1	0	2	0	0	0	0	0	0	2	0	0	2	0	5	5
07:30 AM	0	0	0	0	0	0	3	1	0	4	0	0	0	0	0	0	9	1	0	10	0	14	14
07:45 AM	2	0	0	0	2	0	4	3	0	7	0	0	0	0	0	0	3	0	0	3	0	12	12
Total	4	0	1	0	5	0	11	7	0	18	0	0	0	0	0	0	17	1	0	18	0	41	41
08:00 AM	1	0	0	0	1	0	4	3	0	7	0	0	0	0	0	0	1	0	0	1	0	9	9
08:15 AM	1	0	0	0	1	0	7	3	0	10	0	0	0	0	0	1	4	0	0	5	0	16	16
08:30 AM	1	0	0	0	1	0	6	2	0	8	0	0	0	0	0	0	10	0	0	10	0	19	19
08:45 AM	1	0	0	0	1	0	8	3	0	11	0	0	0	0	0	1	9	0	0	10	0	22	22
Total	4	0	0	0	4	0	25	11	0	36	0	0	0	0	0	2	24	0	0	26	0	66	66
Grand Total	8	0	1	0	9	0	36	18	0	54	0	0	0	0	0	2	41	1	0	44	0	107	107
Apprch %	88.9	0	11.1			0	66.7	33.3			0	0	0			4.5	93.2	2.3					
Total %	7.5	0	0.9		8.4	0	33.6	16.8		50.5	0	0	0		0	1.9	38.3	0.9		41.1	0	100	

	Arrow Highway Southbound				Arrow Highway Westbound				Commercial Driveway Northbound				Live Oak Avenue Eastbound				
Start Time	Left	Thru	Right	App. Total	Left	Thru	Right	App. Total	Left	Thru	Right	App. Total	Left	Thru	Right	App. Total	Int. Total
Peak Hour Analysis From 07:00 AM to 07:45 AM - Peak 1 of 1																	
Peak Hour for Entire Intersection Begins at 07:00 AM																	
07:00 AM	**2**	0	0	**2**	0	3	2	5	0	0	0	0	0	3	0	3	10
07:15 AM	0	0	**1**	1	0	1	1	2	0	0	0	0	0	2	0	2	5
07:30 AM	0	0	0	0	0	3	1	4	0	0	0	0	0	**9**	**1**	**10**	**14**
07:45 AM	2	0	0	2	0	**4**	**3**	**7**	0	0	0	0	0	3	0	3	12
Total Volume	4	0	1	5	0	11	7	18	0	0	0	0	0	17	1	18	41
% App. Total	80	0	20		0	61.1	38.9		0	0	0		0	94.4	5.6		
PHF	.500	.000	.250	.625	.000	.688	.583	.643	.000	.000	.000	.000	.000	.472	.250	.450	.732

Counts Unlimited
PO Box 1178
Corona, CA 92878
(951) 268-6268

City of Irwindale
N/S: Arrow Highway
E/W: Live Oak Avenue/Arrow Highway
Weather: Clear

File Name : 12_IRW_Ar Lo AM
Site Code : 05117783
Start Date : 11/28/2017
Page No : 2

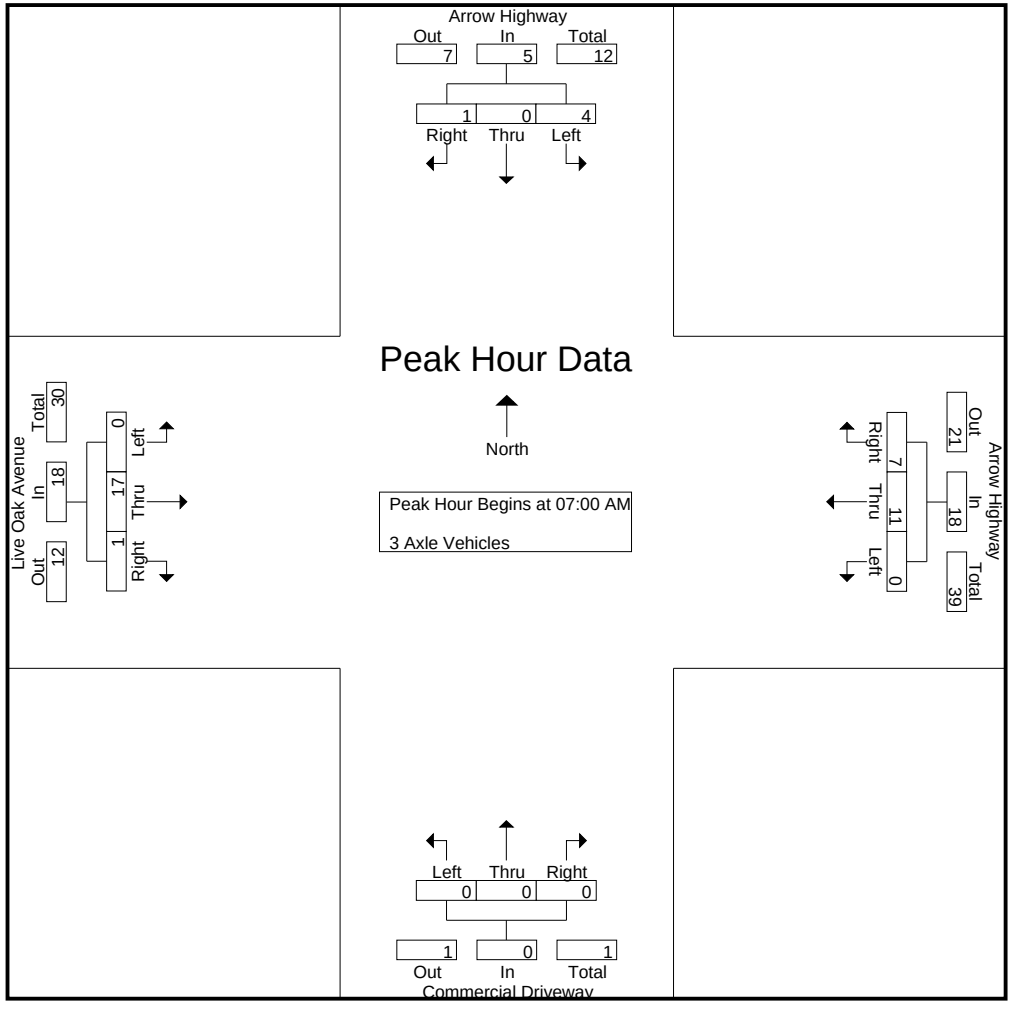

Counts Unlimited
PO Box 1178
Corona, CA 92878
(951) 268-6268

City of Irwindale
N/S: Arrow Highway
E/W: Live Oak Avenue/Arrow Highway
Weather: Clear

File Name : 12_IRW_Ar Lo AM
Site Code : 05117783
Start Date : 11/28/2017
Page No : 3

	Arrow Highway Southbound				Arrow Highway Westbound				Commercial Driveway Northbound				Live Oak Avenue Eastbound				
Start Time	Left	Thru	Right	App. Total	Left	Thru	Right	App. Total	Left	Thru	Right	App. Total	Left	Thru	Right	App. Total	Int. Total
Peak Hour Analysis From 07:00 AM to 07:45 AM - Peak 1 of 1																	
Peak Hour for Each Approach Begins at:																	
	07:00 AM				07:00 AM				07:00 AM				07:00 AM				
+0 mins.	**2**	0	0	**2**	0	3	2	5	0	0	0	0	0	3	0	3	
+15 mins.	0	0	**1**	1	0	1	1	2	0	0	0	0	0	2	0	2	
+30 mins.	0	0	0	0	0	3	1	4	0	0	0	0	0	**9**	**1**	**10**	
+45 mins.	2	0	0	2	0	**4**	**3**	**7**	0	0	0	0	0	3	0	3	
Total Volume	4	0	1	5	0	11	7	18	0	0	0	0	0	17	1	18	
% App. Total	80	0	20		0	61.1	38.9		0	0	0		0	94.4	5.6		
PHF	.500	.000	.250	.625	.000	.688	.583	.643	.000	.000	.000	.000	.000	.472	.250	.450	

Counts Unlimited
PO Box 1178
Corona, CA 92878
(951) 268-6268

City of Irwindale
N/S: Arrow Highway
E/W: Live Oak Avenue/Arrow Highway
Weather: Clear

File Name : 12_IRW_Ar Lo AM
Site Code : 05117783
Start Date : 11/28/2017
Page No : 1

Groups Printed- 4+ Axle Trucks

	Arrow Highway Southbound					Arrow Highway Westbound					Commercial Driveway Northbound					Live Oak Avenue Eastbound							
Start Time	Left	Thru	Right	RTOR	App. Total	Left	Thru	Right	RTOR	App. Total	Left	Thru	Right	RTOR	App. Total	Left	Thru	Right	RTOR	App. Total	Exclu. Total	Inclu. Total	Int. Total
07:00 AM	0	0	0	0	0	0	3	4	0	7	0	0	0	0	0	0	16	0	0	16	0	23	23
07:15 AM	1	0	0	0	1	0	15	10	0	25	0	0	0	0	0	0	10	0	0	10	0	36	36
07:30 AM	0	0	0	0	0	0	12	5	0	17	0	0	0	0	0	2	13	0	0	15	0	32	32
07:45 AM	0	0	0	0	0	0	9	7	0	16	0	0	0	0	0	0	15	0	0	15	0	31	31
Total	1	0	0	0	1	0	39	26	0	65	0	0	0	0	0	2	54	0	0	56	0	122	122
08:00 AM	2	0	0	0	2	0	17	6	0	23	0	0	0	0	0	0	14	0	0	14	0	39	39
08:15 AM	0	0	1	0	1	0	10	1	0	11	0	0	0	0	0	0	17	0	0	17	0	29	29
08:30 AM	1	0	0	0	1	0	20	1	0	21	0	0	0	0	0	0	10	0	0	10	0	32	32
08:45 AM	1	0	0	0	1	0	11	2	0	13	0	0	0	0	0	0	15	0	0	15	0	29	29
Total	4	0	1	0	5	0	58	10	0	68	0	0	0	0	0	0	56	0	0	56	0	129	129
Grand Total	5	0	1	0	6	0	97	36	0	133	0	0	0	0	0	2	110	0	0	112	0	251	251
Apprch %	83.3	0	16.7			0	72.9	27.1			0	0	0			1.8	98.2	0					
Total %	2	0	0.4		2.4	0	38.6	14.3		53	0	0	0		0	0.8	43.8	0		44.6	0	100	

	Arrow Highway Southbound				Arrow Highway Westbound				Commercial Driveway Northbound				Live Oak Avenue Eastbound				
Start Time	Left	Thru	Right	App. Total	Left	Thru	Right	App. Total	Left	Thru	Right	App. Total	Left	Thru	Right	App. Total	Int. Total
Peak Hour Analysis From 07:00 AM to 07:45 AM - Peak 1 of 1																	
Peak Hour for Entire Intersection Begins at 07:00 AM																	
07:00 AM	0	0	0	0	0	3	4	7	0	0	0	0	0	**16**	0	**16**	23
07:15 AM	**1**	0	0	**1**	0	**15**	**10**	**25**	0	0	0	0	0	10	0	10	**36**
07:30 AM	0	0	0	0	0	12	5	17	0	0	0	0	**2**	13	0	15	32
07:45 AM	0	0	0	0	0	9	7	16	0	0	0	0	0	15	0	15	31
Total Volume	1	0	0	1	0	39	26	65	0	0	0	0	2	54	0	56	122
% App. Total	100	0	0		0	60	40		0	0	0		3.6	96.4	0		
PHF	.250	.000	.000	.250	.000	.650	.650	.650	.000	.000	.000	.000	.250	.844	.000	.875	.847

Counts Unlimited
PO Box 1178
Corona, CA 92878
(951) 268-6268

City of Irwindale
N/S: Arrow Highway
E/W: Live Oak Avenue/Arrow Highway
Weather: Clear

File Name : 12_IRW_Ar Lo AM
Site Code : 05117783
Start Date : 11/28/2017
Page No : 2

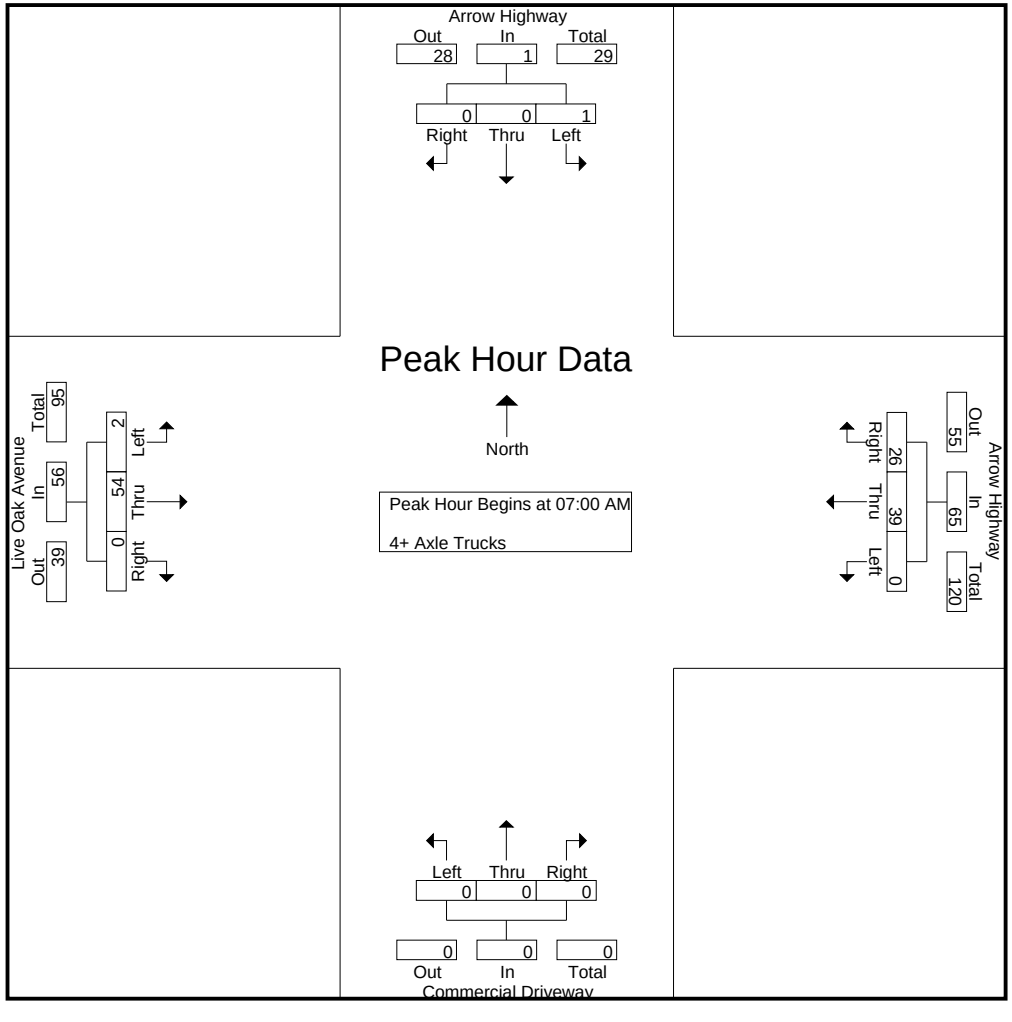

Counts Unlimited
PO Box 1178
Corona, CA 92878
(951) 268-6268

City of Irwindale
N/S: Arrow Highway
E/W: Live Oak Avenue/Arrow Highway
Weather: Clear

File Name : 12_IRW_Ar Lo AM
Site Code : 05117783
Start Date : 11/28/2017
Page No : 3

	Arrow Highway Southbound				Arrow Highway Westbound				Commercial Driveway Northbound				Live Oak Avenue Eastbound				
Start Time	Left	Thru	Right	App. Total	Left	Thru	Right	App. Total	Left	Thru	Right	App. Total	Left	Thru	Right	App. Total	Int. Total
Peak Hour Analysis From 07:00 AM to 07:45 AM - Peak 1 of 1																	
Peak Hour for Each Approach Begins at:																	
	07:00 AM				07:00 AM				07:00 AM				07:00 AM				
+0 mins.	0	0	0	0	0	3	4	7	0	0	0	0	0	**16**	0	**16**	
+15 mins.	**1**	0	0	**1**	0	**15**	**10**	**25**	0	0	0	0	0	10	0	10	
+30 mins.	0	0	0	0	0	12	5	17	0	0	0	0	**2**	13	0	15	
+45 mins.	0	0	0	0	0	9	7	16	0	0	0	0	0	15	0	15	
Total Volume	1	0	0	1	0	39	26	65	0	0	0	0	2	54	0	56	
% App. Total	100	0	0		0	60	40		0	0	0		3.6	96.4	0		
PHF	.250	.000	.000	.250	.000	.650	.650	.650	.000	.000	.000	.000	.250	.844	.000	.875	

Counts Unlimited
PO Box 1178
Corona, CA 92878
(951) 268-6268

City of Irwindale
N/S: Arrow Highway
E/W: Live Oak Avenue/Arrow Highway
Weather: Clear

File Name : 12_IRW_Ar Lo PM
Site Code : 05117783
Start Date : 11/28/2017
Page No : 1

Groups Printed- Passenger Vehicles - Large 2 Axle Vehicles - 3 Axle Vehicles - 4+ Axle Trucks

	Arrow Highway Southbound					Arrow Highway Westbound					Commercial Driveway Northbound					Live Oak Avenue Eastbound							
Start Time	Left	Thru	Right	RTOR	App. Total	Left	Thru	Right	RTOR	App. Total	Left	Thru	Right	RTOR	App. Total	Left	Thru	Right	RTOR	App. Total	Exclu. Total	Inclu. Total	Int. Total
04:00 PM	263	0	27	16	290	0	169	98	0	267	0	0	0	0	0	12	313	0	0	325	16	882	898
04:15 PM	224	0	23	6	247	0	171	111	0	282	0	0	0	0	0	9	305	0	0	314	6	843	849
04:30 PM	222	0	25	10	247	0	195	113	0	308	0	0	0	0	0	10	335	0	0	345	10	900	910
04:45 PM	280	0	41	25	321	0	178	107	0	285	0	0	0	0	0	12	324	0	0	336	25	942	967
Total	989	0	116	57	1105	0	713	429	0	1142	0	0	0	0	0	43	1277	0	0	1320	57	3567	3624
05:00 PM	268	0	29	11	297	0	206	125	0	331	0	0	0	0	0	7	344	0	0	351	11	979	990
05:15 PM	280	0	25	14	305	0	214	103	0	317	0	0	0	0	0	9	324	0	0	333	14	955	969
05:30 PM	249	0	36	18	285	0	176	116	0	292	0	0	0	0	0	13	334	0	0	347	18	924	942
05:45 PM	283	0	26	15	309	0	164	88	0	252	0	0	0	0	0	14	314	0	0	328	15	889	904
Total	1080	0	116	58	1196	0	760	432	0	1192	0	0	0	0	0	43	1316	0	0	1359	58	3747	3805
Grand Total	2069	0	232	115	2301	0	1473	861	0	2334	0	0	0	0	0	86	2593	0	0	2679	115	7314	7429
Apprch %	89.9	0	10.1			0	63.1	36.9			0	0	0			3.2	96.8	0					
Total %	28.3	0	3.2		31.5	0	20.1	11.8		31.9	0	0	0		0	1.2	35.5	0		36.6	1.5	98.5	
Passenger Vehicles	1999	0	226		2338	0	1371	804		2175	0	0	0		0	83	2435	0		2518	0	0	7031
% Passenger Vehicles	96.6	0	97.4	98.3	96.8	0	93.1	93.4	0	93.2	0	0	0	0	0	96.5	93.9	0	0	94	0	0	94.6
Large 2 Axle Vehicles	57	0	3		61	0	37	14		51	0	0	0		0	1	106	0		107	0	0	219
% Large 2 Axle Vehicles	2.8	0	1.3	0.9	2.5	0	2.5	1.6	0	2.2	0	0	0	0	0	1.2	4.1	0	0	4	0	0	2.9
3 Axle Vehicles	6	0	1		7	0	31	35		66	0	0	0		0	0	19	0		19	0	0	92
% 3 Axle Vehicles	0.3	0	0.4	0	0.3	0	2.1	4.1	0	2.8	0	0	0	0	0	0	0.7	0	0	0.7	0	0	1.2
4+ Axle Trucks	7	0	2		10	0	34	8		42	0	0	0		0	2	33	0		35	0	0	87
% 4+ Axle Trucks	0.3	0	0.9	0.9	0.4	0	2.3	0.9	0	1.8	0	0	0	0	0	2.3	1.3	0	0	1.3	0	0	1.2

	Arrow Highway Southbound				Arrow Highway Westbound				Commercial Driveway Northbound				Live Oak Avenue Eastbound				
Start Time	Left	Thru	Right	App. Total	Left	Thru	Right	App. Total	Left	Thru	Right	App. Total	Left	Thru	Right	App. Total	Int. Total
Peak Hour Analysis From 04:00 PM to 05:45 PM - Peak 1 of 1																	
Peak Hour for Entire Intersection Begins at 04:45 PM																	
04:45 PM	**280**	0	**41**	**321**	0	178	107	285	0	0	0	0	12	324	0	336	942
05:00 PM	268	0	29	297	0	206	**125**	**331**	0	0	0	0	7	**344**	0	**351**	**979**
05:15 PM	280	0	25	305	0	**214**	103	317	0	0	0	0	9	324	0	333	955
05:30 PM	249	0	36	285	0	176	116	292	0	0	0	0	**13**	334	0	347	924
Total Volume	1077	0	131	1208	0	774	451	1225	0	0	0	0	41	1326	0	1367	3800
% App. Total	89.2	0	10.8		0	63.2	36.8		0	0	0		3	97	0		
PHF	.962	.000	.799	.941	.000	.904	.902	.925	.000	.000	.000	.000	.788	.964	.000	.974	.970

Counts Unlimited
PO Box 1178
Corona, CA 92878
(951) 268-6268

City of Irwindale
N/S: Arrow Highway
E/W: Live Oak Avenue/Arrow Highway
Weather: Clear

File Name : 12_IRW_Ar Lo PM
Site Code : 05117783
Start Date : 11/28/2017
Page No : 2

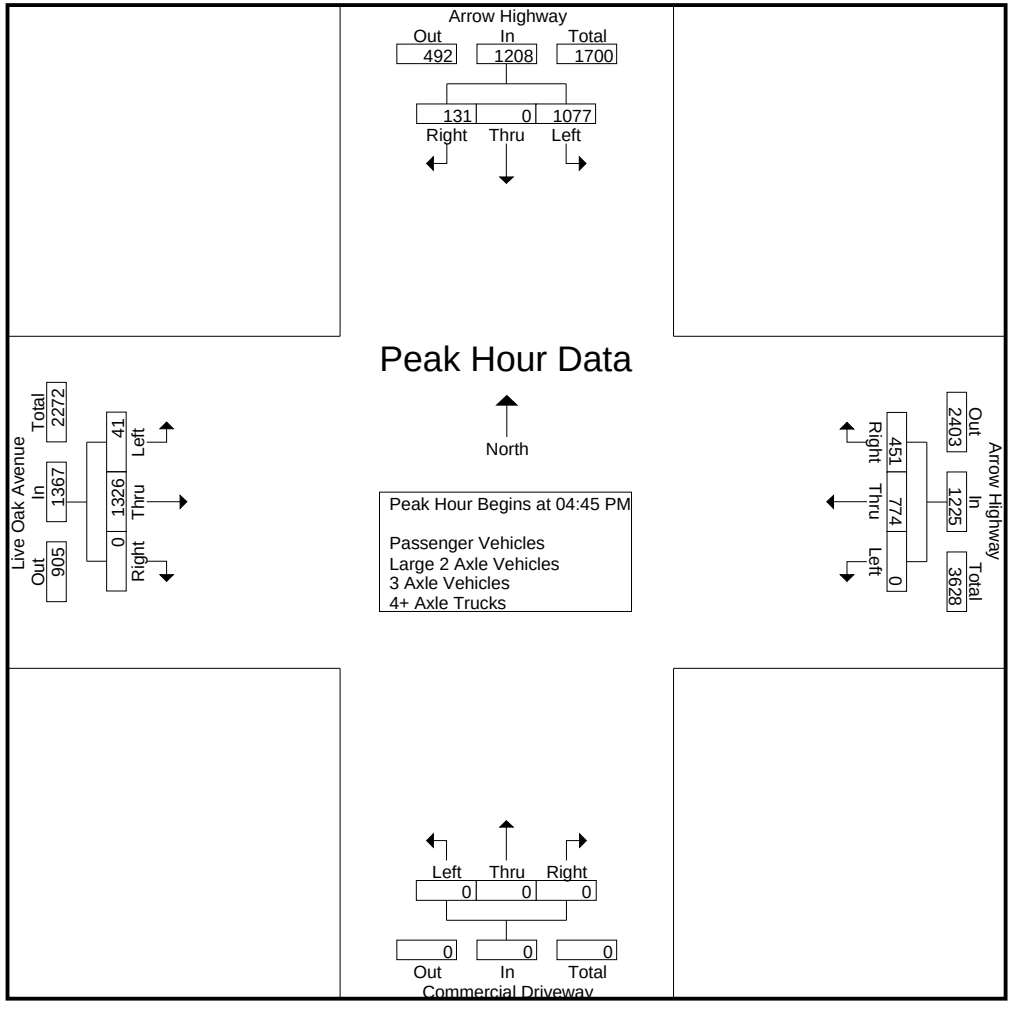

Counts Unlimited
PO Box 1178
Corona, CA 92878
(951) 268-6268

City of Irwindale
N/S: Arrow Highway
E/W: Live Oak Avenue/Arrow Highway
Weather: Clear

File Name : 12_IRW_Ar Lo PM
Site Code : 05117783
Start Date : 11/28/2017

	Arrow Highway Southbound				Arrow Highway Westbound				Commercial Driveway Northbound				Live Oak Avenue Eastbound				
Start Time	Left	Thru	Right	App. Total	Left	Thru	Right	App. Total	Left	Thru	Right	App. Total	Left	Thru	Right	App. Total	Int. Total
Peak Hour Analysis From 04:00 PM to 05:45 PM - Peak 1 of 1																	
Peak Hour for Each Approach Begins at:																	
	04:45 PM				04:30 PM				04:00 PM				04:45 PM				
+0 mins.	**280**	0	**41**	**321**	0	195	113	308	0	0	0	0	12	324	0	336	
+15 mins.	268	0	29	297	0	178	107	285	0	0	0	0	7	**344**	0	**351**	
+30 mins.	280	0	25	305	0	206	**125**	**331**	0	0	0	0	9	324	0	333	
+45 mins.	249	0	36	285	0	**214**	103	317	0	0	0	0	**13**	334	0	347	
Total Volume	1077	0	131	1208	0	793	448	1241	0	0	0	0	41	1326	0	1367	
% App. Total	89.2	0	10.8		0	63.9	36.1		0	0	0		3	97	0		
PHF	.962	.000	.799	.941	.000	.926	.896	.937	.000	.000	.000	.000	.788	.964	.000	.974	

Counts Unlimited
PO Box 1178
Corona, CA 92878
(951) 268-6268

City of Irwindale
N/S: Arrow Highway
E/W: Live Oak Avenue/Arrow Highway
Weather: Clear

File Name : 12_IRW_Ar Lo PM
Site Code : 05117783
Start Date : 11/28/2017
Page No : 1

Groups Printed- Passenger Vehicles

	Arrow Highway Southbound					Arrow Highway Westbound					Commercial Driveway Northbound					Live Oak Avenue Eastbound							
Start Time	Left	Thru	Right	RTOR	App. Total	Left	Thru	Right	RTOR	App. Total	Left	Thru	Right	RTOR	App. Total	Left	Thru	Right	RTOR	App. Total	Exclu. Total	Inclu. Total	Int. Total
04:00 PM	244	0	27	16	271	0	152	89	0	241	0	0	0	0	0	12	275	0	0	287	16	799	815
04:15 PM	214	0	21	6	235	0	151	103	0	254	0	0	0	0	0	8	280	0	0	288	6	777	783
04:30 PM	214	0	24	10	238	0	175	102	0	277	0	0	0	0	0	9	312	0	0	321	10	836	846
04:45 PM	270	0	41	25	311	0	170	104	0	274	0	0	0	0	0	12	310	0	0	322	25	907	932
Total	942	0	113	57	1055	0	648	398	0	1046	0	0	0	0	0	41	1177	0	0	1218	57	3319	3376
05:00 PM	259	0	28	11	287	0	198	114	0	312	0	0	0	0	0	7	324	0	0	331	11	930	941
05:15 PM	275	0	25	14	300	0	199	98	0	297	0	0	0	0	0	9	318	0	0	327	14	924	938
05:30 PM	243	0	34	16	277	0	168	109	0	277	0	0	0	0	0	12	317	0	0	329	16	883	899
05:45 PM	280	0	26	15	306	0	158	85	0	243	0	0	0	0	0	14	299	0	0	313	15	862	877
Total	1057	0	113	56	1170	0	723	406	0	1129	0	0	0	0	0	42	1258	0	0	1300	56	3599	3655
Grand Total	1999	0	226	113	2225	0	1371	804	0	2175	0	0	0	0	0	83	2435	0	0	2518	113	6918	7031
Apprch %	89.8	0	10.2			0	63	37			0	0	0			3.3	96.7	0					
Total %	28.9	0	3.3		32.2	0	19.8	11.6		31.4	0	0	0		0	1.2	35.2	0		36.4	1.6	98.4	

	Arrow Highway Southbound				Arrow Highway Westbound				Commercial Driveway Northbound				Live Oak Avenue Eastbound				
Start Time	Left	Thru	Right	App. Total	Left	Thru	Right	App. Total	Left	Thru	Right	App. Total	Left	Thru	Right	App. Total	Int. Total
Peak Hour Analysis From 04:45 PM to 05:30 PM - Peak 1 of 1																	
Peak Hour for Entire Intersection Begins at 04:45 PM																	
04:45 PM	270	0	**41**	**311**	0	170	104	274	0	0	0	0	**12**	310	0	322	907
05:00 PM	259	0	28	287	0	198	**114**	**312**	0	0	0	0	7	**324**	0	**331**	**930**
05:15 PM	**275**	0	25	300	0	**199**	98	297	0	0	0	0	9	318	0	327	924
05:30 PM	243	0	34	277	0	168	109	277	0	0	0	0	12	317	0	329	883
Total Volume	1047	0	128	1175	0	735	425	1160	0	0	0	0	40	1269	0	1309	3644
% App. Total	89.1	0	10.9		0	63.4	36.6		0	0	0		3.1	96.9	0		
PHF	.952	.000	.780	.945	.000	.923	.932	.929	.000	.000	.000	.000	.833	.979	.000	.989	.980

Counts Unlimited
PO Box 1178
Corona, CA 92878
(951) 268-6268

City of Irwindale
N/S: Arrow Highway
E/W: Live Oak Avenue/Arrow Highway
Weather: Clear

File Name : 12_IRW_Ar Lo PM
Site Code : 05117783
Start Date : 11/28/2017
Page No : 2

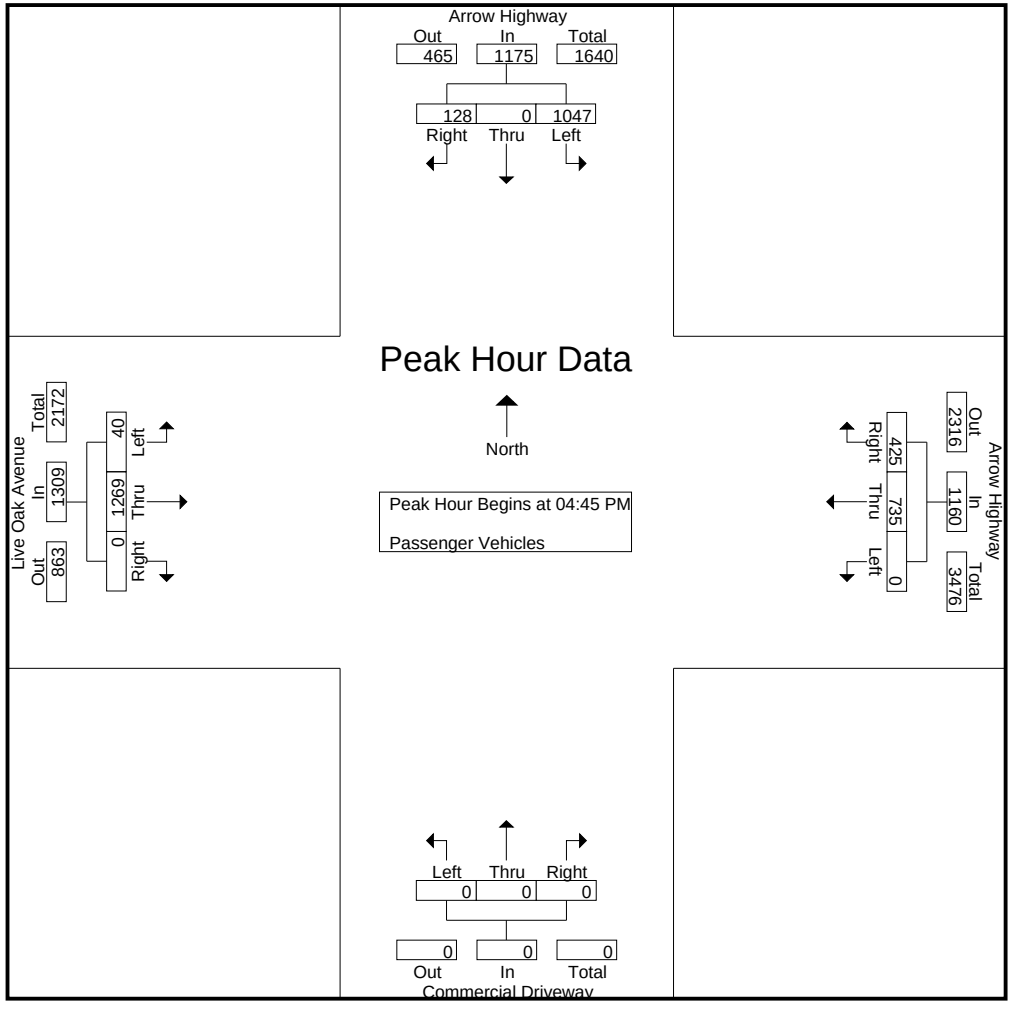

Counts Unlimited
PO Box 1178
Corona, CA 92878
(951) 268-6268

City of Irwindale
N/S: Arrow Highway
E/W: Live Oak Avenue/Arrow Highway
Weather: Clear

File Name : 12_IRW_Ar Lo PM
Site Code : 05117783
Start Date : 11/28/2017

	Arrow Highway Southbound				Arrow Highway Westbound				Commercial Driveway Northbound				Live Oak Avenue Eastbound				
Start Time	Left	Thru	Right	App. Total	Left	Thru	Right	App. Total	Left	Thru	Right	App. Total	Left	Thru	Right	App. Total	Int. Total
Peak Hour Analysis From 04:45 PM to 05:30 PM - Peak 1 of 1																	
Peak Hour for Each Approach Begins at:																	
	04:45 PM				04:45 PM				04:45 PM				04:45 PM				
+0 mins.	270	0	**41**	**311**	0	170	104	274	0	0	0	0	**12**	310	0	322	
+15 mins.	259	0	28	287	0	198	**114**	**312**	0	0	0	0	7	**324**	0	**331**	
+30 mins.	**275**	0	25	300	0	**199**	98	297	0	0	0	0	9	318	0	327	
+45 mins.	243	0	34	277	0	168	109	277	0	0	0	0	12	317	0	329	
Total Volume	1047	0	128	1175	0	735	425	1160	0	0	0	0	40	1269	0	1309	
% App. Total	89.1	0	10.9		0	63.4	36.6		0	0	0		3.1	96.9	0		
PHF	.952	.000	.780	.945	.000	.923	.932	.929	.000	.000	.000	.000	.833	.979	.000	.989	

Counts Unlimited
PO Box 1178
Corona, CA 92878
(951) 268-6268

City of Irwindale
N/S: Arrow Highway
E/W: Live Oak Avenue/Arrow Highway
Weather: Clear

File Name : 12_IRW_Ar Lo PM
Site Code : 05117783
Start Date : 11/28/2017
Page No : 1

Groups Printed- Large 2 Axle Vehicles

	Arrow Highway Southbound					Arrow Highway Westbound					Commercial Driveway Northbound					Live Oak Avenue Eastbound							
Start Time	Left	Thru	Right	RTOR	App. Total	Left	Thru	Right	RTOR	App. Total	Left	Thru	Right	RTOR	App. Total	Left	Thru	Right	RTOR	App. Total	Exclu. Total	Inclu. Total	Int. Total
04:00 PM	15	0	0	0	15	0	3	5	0	8	0	0	0	0	0	0	24	0	0	24	0	47	47
04:15 PM	9	0	2	0	11	0	7	4	0	11	0	0	0	0	0	0	16	0	0	16	0	38	38
04:30 PM	7	0	0	0	7	0	6	1	0	7	0	0	0	0	0	0	14	0	0	14	0	28	28
04:45 PM	7	0	0	0	7	0	3	1	0	4	0	0	0	0	0	0	10	0	0	10	0	21	21
Total	38	0	2	0	40	0	19	11	0	30	0	0	0	0	0	0	64	0	0	64	0	134	134
05:00 PM	8	0	0	0	8	0	3	2	0	5	0	0	0	0	0	0	13	0	0	13	0	26	26
05:15 PM	4	0	0	0	4	0	8	1	0	9	0	0	0	0	0	0	6	0	0	6	0	19	19
05:30 PM	4	0	1	1	5	0	4	0	0	4	0	0	0	0	0	1	11	0	0	12	1	21	22
05:45 PM	3	0	0	0	3	0	3	0	0	3	0	0	0	0	0	0	12	0	0	12	0	18	18
Total	19	0	1	1	20	0	18	3	0	21	0	0	0	0	0	1	42	0	0	43	1	84	85
Grand Total	57	0	3	1	60	0	37	14	0	51	0	0	0	0	0	1	106	0	0	107	1	218	219
Apprch %	95	0	5			0	72.5	27.5			0	0	0			0.9	99.1	0					
Total %	26.1	0	1.4		27.5	0	17	6.4		23.4	0	0	0		0	0.5	48.6	0		49.1	0.5	99.5	

	Arrow Highway Southbound				Arrow Highway Westbound				Commercial Driveway Northbound				Live Oak Avenue Eastbound				
Start Time	Left	Thru	Right	App. Total	Left	Thru	Right	App. Total	Left	Thru	Right	App. Total	Left	Thru	Right	App. Total	Int. Total
Peak Hour Analysis From 04:45 PM to 05:30 PM - Peak 1 of 1																	
Peak Hour for Entire Intersection Begins at 04:45 PM																	
04:45 PM	7	0	0	7	0	3	1	4	0	0	0	0	0	10	0	10	21
05:00 PM	**8**	0	0	**8**	0	3	**2**	5	0	0	0	0	0	**13**	0	**13**	**26**
05:15 PM	4	0	0	4	0	**8**	1	**9**	0	0	0	0	0	6	0	6	19
05:30 PM	4	0	**1**	5	0	4	0	4	0	0	0	0	**1**	11	0	12	21
Total Volume	23	0	1	24	0	18	4	22	0	0	0	0	1	40	0	41	87
% App. Total	95.8	0	4.2		0	81.8	18.2		0	0	0		2.4	97.6	0		
PHF	.719	.000	.250	.750	.000	.563	.500	.611	.000	.000	.000	.000	.250	.769	.000	.788	.837

Counts Unlimited
PO Box 1178
Corona, CA 92878
(951) 268-6268

City of Irwindale
N/S: Arrow Highway
E/W: Live Oak Avenue/Arrow Highway
Weather: Clear

File Name : 12_IRW_Ar Lo PM
Site Code : 05117783
Start Date : 11/28/2017
Page No : 2

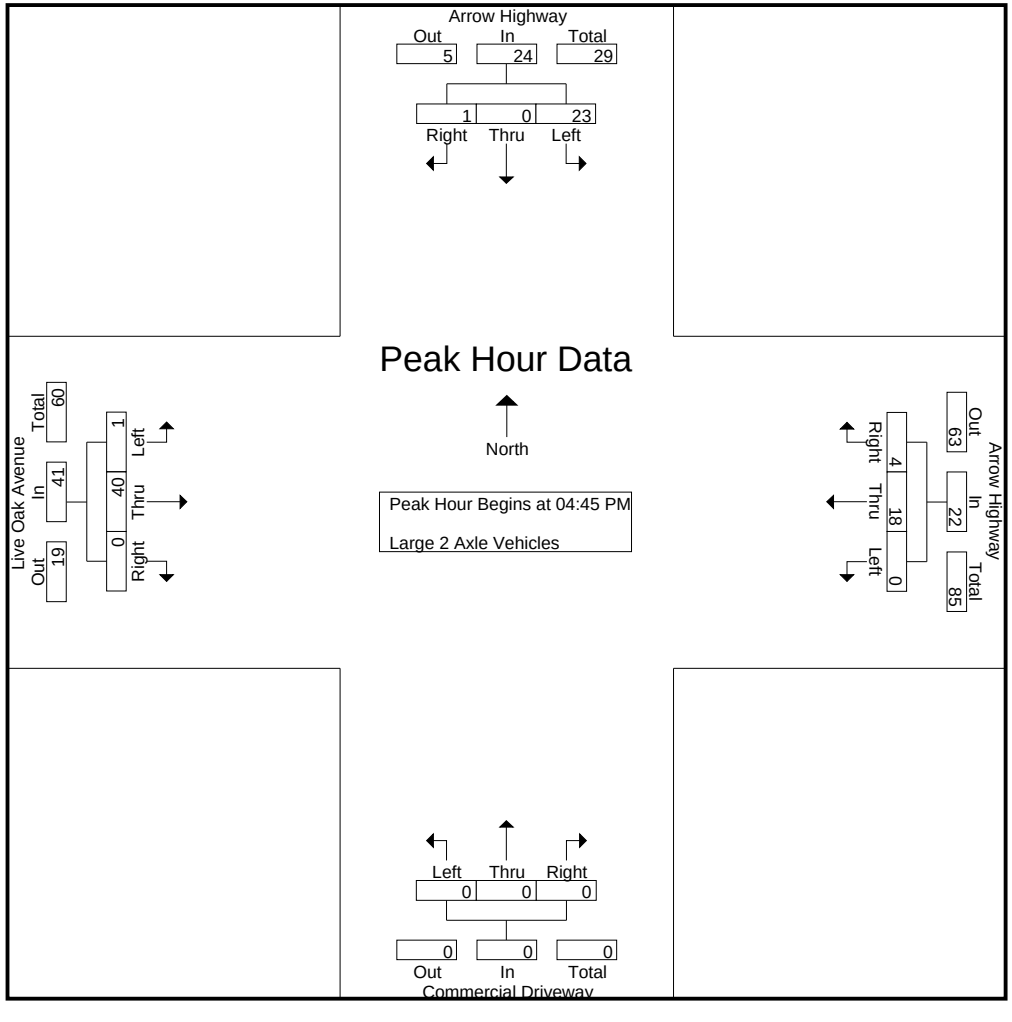

Counts Unlimited
PO Box 1178
Corona, CA 92878
(951) 268-6268

City of Irwindale
N/S: Arrow Highway
E/W: Live Oak Avenue/Arrow Highway
Weather: Clear

File Name : 12_IRW_Ar Lo PM
Site Code : 05117783
Start Date : 11/28/2017

	Arrow Highway Southbound				Arrow Highway Westbound				Commercial Driveway Northbound				Live Oak Avenue Eastbound				
Start Time	Left	Thru	Right	App. Total	Left	Thru	Right	App. Total	Left	Thru	Right	App. Total	Left	Thru	Right	App. Total	Int. Total
Peak Hour Analysis From 04:45 PM to 05:30 PM - Peak 1 of 1																	
Peak Hour for Each Approach Begins at:																	
	04:45 PM				04:45 PM				04:45 PM				04:45 PM				
+0 mins.	7	0	0	7	0	3	1	4	0	0	0	0	0	10	0	10	
+15 mins.	**8**	0	0	**8**	0	3	**2**	5	0	0	0	0	0	**13**	0	**13**	
+30 mins.	4	0	0	4	0	**8**	1	**9**	0	0	0	0	0	6	0	6	
+45 mins.	4	0	**1**	5	0	4	0	4	0	0	0	0	**1**	11	0	12	
Total Volume	23	0	1	24	0	18	4	22	0	0	0	0	1	40	0	41	
% App. Total	95.8	0	4.2		0	81.8	18.2		0	0	0		2.4	97.6	0		
PHF	.719	.000	.250	.750	.000	.563	.500	.611	.000	.000	.000	.000	.250	.769	.000	.788	

Counts Unlimited
PO Box 1178
Corona, CA 92878
(951) 268-6268

City of Irwindale
N/S: Arrow Highway
E/W: Live Oak Avenue/Arrow Highway
Weather: Clear

File Name : 12_IRW_Ar Lo PM
Site Code : 05117783
Start Date : 11/28/2017
Page No : 1

Groups Printed- 3 Axle Vehicles

	Arrow Highway Southbound					Arrow Highway Westbound					Commercial Driveway Northbound					Live Oak Avenue Eastbound							
Start Time	Left	Thru	Right	RTOR	App. Total	Left	Thru	Right	RTOR	App. Total	Left	Thru	Right	RTOR	App. Total	Left	Thru	Right	RTOR	App. Total	Exclu. Total	Inclu. Total	Int. Total
04:00 PM	0	0	0	0	0	0	7	3	0	10	0	0	0	0	0	0	5	0	0	5	0	15	15
04:15 PM	1	0	0	0	1	0	7	3	0	10	0	0	0	0	0	0	4	0	0	4	0	15	15
04:30 PM	1	0	0	0	1	0	5	8	0	13	0	0	0	0	0	0	4	0	0	4	0	18	18
04:45 PM	2	0	0	0	2	0	1	2	0	3	0	0	0	0	0	0	1	0	0	1	0	6	6
Total	4	0	0	0	4	0	20	16	0	36	0	0	0	0	0	0	14	0	0	14	0	54	54
05:00 PM	1	0	1	0	2	0	3	7	0	10	0	0	0	0	0	0	3	0	0	3	0	15	15
05:15 PM	1	0	0	0	1	0	2	3	0	5	0	0	0	0	0	0	0	0	0	0	0	6	6
05:30 PM	0	0	0	0	0	0	4	6	0	10	0	0	0	0	0	0	1	0	0	1	0	11	11
05:45 PM	0	0	0	0	0	0	2	3	0	5	0	0	0	0	0	0	1	0	0	1	0	6	6
Total	2	0	1	0	3	0	11	19	0	30	0	0	0	0	0	0	5	0	0	5	0	38	38
Grand Total	6	0	1	0	7	0	31	35	0	66	0	0	0	0	0	0	19	0	0	19	0	92	92
Apprch %	85.7	0	14.3			0	47	53			0	0	0			0	100	0					
Total %	6.5	0	1.1		7.6	0	33.7	38		71.7	0	0	0		0	0	20.7	0		20.7	0	100	

	Arrow Highway Southbound				Arrow Highway Westbound				Commercial Driveway Northbound				Live Oak Avenue Eastbound				
Start Time	Left	Thru	Right	App. Total	Left	Thru	Right	App. Total	Left	Thru	Right	App. Total	Left	Thru	Right	App. Total	Int. Total
Peak Hour Analysis From 04:45 PM to 05:30 PM - Peak 1 of 1																	
Peak Hour for Entire Intersection Begins at 04:45 PM																	
04:45 PM	**2**	0	0	**2**	0	1	2	3	0	0	0	0	0	1	0	1	6
05:00 PM	1	0	**1**	2	0	3	**7**	**10**	0	0	0	0	0	**3**	0	**3**	**15**
05:15 PM	1	0	0	1	0	2	3	5	0	0	0	0	0	0	0	0	6
05:30 PM	0	0	0	0	0	**4**	6	10	0	0	0	0	0	1	0	1	11
Total Volume	4	0	1	5	0	10	18	28	0	0	0	0	0	5	0	5	38
% App. Total	80	0	20		0	35.7	64.3		0	0	0		0	100	0		
PHF	.500	.000	.250	.625	.000	.625	.643	.700	.000	.000	.000	.000	.000	.417	.000	.417	.633

Counts Unlimited
PO Box 1178
Corona, CA 92878
(951) 268-6268

City of Irwindale
N/S: Arrow Highway
E/W: Live Oak Avenue/Arrow Highway
Weather: Clear

File Name : 12_IRW_Ar Lo PM
Site Code : 05117783
Start Date : 11/28/2017
Page No : 2

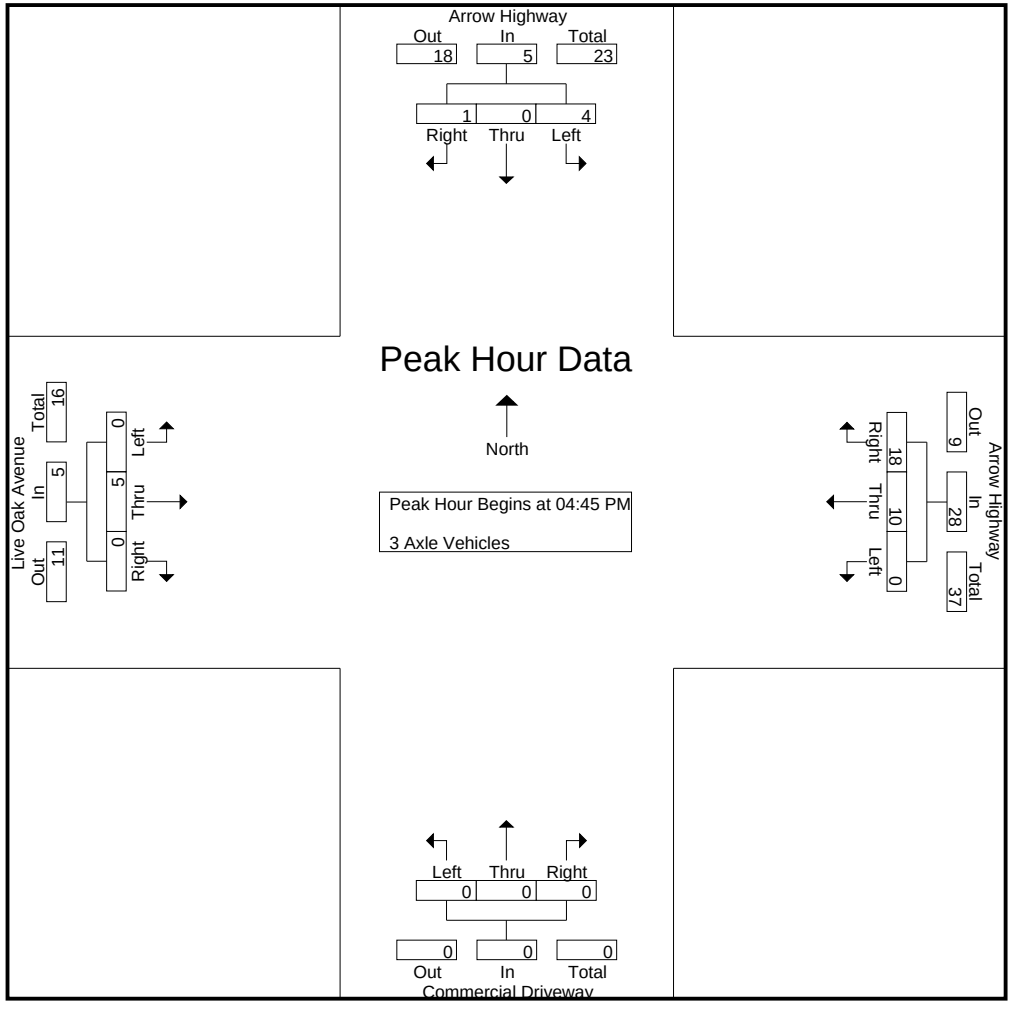

Counts Unlimited
PO Box 1178
Corona, CA 92878
(951) 268-6268

City of Irwindale
N/S: Arrow Highway
E/W: Live Oak Avenue/Arrow Highway
Weather: Clear

File Name : 12_IRW_Ar Lo PM
Site Code : 05117783
Start Date : 11/28/2017
Page No : 3

	Arrow Highway Southbound				Arrow Highway Westbound				Commercial Driveway Northbound				Live Oak Avenue Eastbound				
Start Time	Left	Thru	Right	App. Total	Left	Thru	Right	App. Total	Left	Thru	Right	App. Total	Left	Thru	Right	App. Total	Int. Total
Peak Hour Analysis From 04:45 PM to 05:30 PM - Peak 1 of 1																	
Peak Hour for Each Approach Begins at:																	
	04:45 PM				04:45 PM				04:45 PM				04:45 PM				
+0 mins.	**2**	0	0	**2**	0	1	2	3	0	0	0	0	0	1	0	1	
+15 mins.	1	0	**1**	2	0	3	**7**	**10**	0	0	0	0	0	**3**	0	**3**	
+30 mins.	1	0	0	1	0	2	3	5	0	0	0	0	0	0	0	0	
+45 mins.	0	0	0	0	0	**4**	6	10	0	0	0	0	0	1	0	1	
Total Volume	4	0	1	5	0	10	18	28	0	0	0	0	0	5	0	5	
% App. Total	80	0	20		0	35.7	64.3		0	0	0		0	100	0		
PHF	.500	.000	.250	.625	.000	.625	.643	.700	.000	.000	.000	.000	.000	.417	.000	.417	

Counts Unlimited
PO Box 1178
Corona, CA 92878
(951) 268-6268

City of Irwindale
N/S: Arrow Highway
E/W: Live Oak Avenue/Arrow Highway
Weather: Clear

File Name : 12_IRW_Ar Lo PM
Site Code : 05117783
Start Date : 11/28/2017
Page No : 1

Groups Printed- 4+ Axle Trucks

	Arrow Highway Southbound					Arrow Highway Westbound					Commercial Driveway Northbound					Live Oak Avenue Eastbound							
Start Time	Left	Thru	Right	RTOR	App. Total	Left	Thru	Right	RTOR	App. Total	Left	Thru	Right	RTOR	App. Total	Left	Thru	Right	RTOR	App. Total	Exclu. Total	Inclu. Total	Int. Total
04:00 PM	4	0	0	0	4	0	7	1	0	8	0	0	0	0	0	0	9	0	0	9	0	21	21
04:15 PM	0	0	0	0	0	0	6	1	0	7	0	0	0	0	0	1	5	0	0	6	0	13	13
04:30 PM	0	0	1	0	1	0	9	2	0	11	0	0	0	0	0	1	5	0	0	6	0	18	18
04:45 PM	1	0	0	0	1	0	4	0	0	4	0	0	0	0	0	0	3	0	0	3	0	8	8
Total	5	0	1	0	6	0	26	4	0	30	0	0	0	0	0	2	22	0	0	24	0	60	60
05:00 PM	0	0	0	0	0	0	2	2	0	4	0	0	0	0	0	0	4	0	0	4	0	8	8
05:15 PM	0	0	0	0	0	0	5	1	0	6	0	0	0	0	0	0	0	0	0	0	0	6	6
05:30 PM	2	0	1	1	3	0	0	1	0	1	0	0	0	0	0	0	5	0	0	5	1	9	10
05:45 PM	0	0	0	0	0	0	1	0	0	1	0	0	0	0	0	0	2	0	0	2	0	3	3
Total	2	0	1	1	3	0	8	4	0	12	0	0	0	0	0	0	11	0	0	11	1	26	27
Grand Total	7	0	2	1	9	0	34	8	0	42	0	0	0	0	0	2	33	0	0	35	1	86	87
Apprch %	77.8	0	22.2			0	81	19			0	0	0			5.7	94.3	0					
Total %	8.1	0	2.3		10.5	0	39.5	9.3		48.8	0	0	0		0	2.3	38.4	0		40.7	1.1	98.9	

	Arrow Highway Southbound				Arrow Highway Westbound				Commercial Driveway Northbound				Live Oak Avenue Eastbound				
Start Time	Left	Thru	Right	App. Total	Left	Thru	Right	App. Total	Left	Thru	Right	App. Total	Left	Thru	Right	App. Total	Int. Total
Peak Hour Analysis From 04:45 PM to 05:30 PM - Peak 1 of 1																	
Peak Hour for Entire Intersection Begins at 04:45 PM																	
04:45 PM	1	0	0	1	0	4	0	4	0	0	0	0	0	3	0	3	8
05:00 PM	0	0	0	0	0	2	**2**	4	0	0	0	0	0	4	0	4	8
05:15 PM	0	0	0	0	0	**5**	1	**6**	0	0	0	0	0	0	0	0	6
05:30 PM	**2**	0	**1**	**3**	0	0	1	1	0	0	0	0	0	**5**	0	**5**	**9**
Total Volume	3	0	1	4	0	11	4	15	0	0	0	0	0	12	0	12	31
% App. Total	75	0	25		0	73.3	26.7		0	0	0		0	100	0		
PHF	.375	.000	.250	.333	.000	.550	.500	.625	.000	.000	.000	.000	.000	.600	.000	.600	.861

Counts Unlimited
PO Box 1178
Corona, CA 92878
(951) 268-6268

City of Irwindale
N/S: Arrow Highway
E/W: Live Oak Avenue/Arrow Highway
Weather: Clear

File Name : 12_IRW_Ar Lo PM
Site Code : 05117783
Start Date : 11/28/2017
Page No : 2

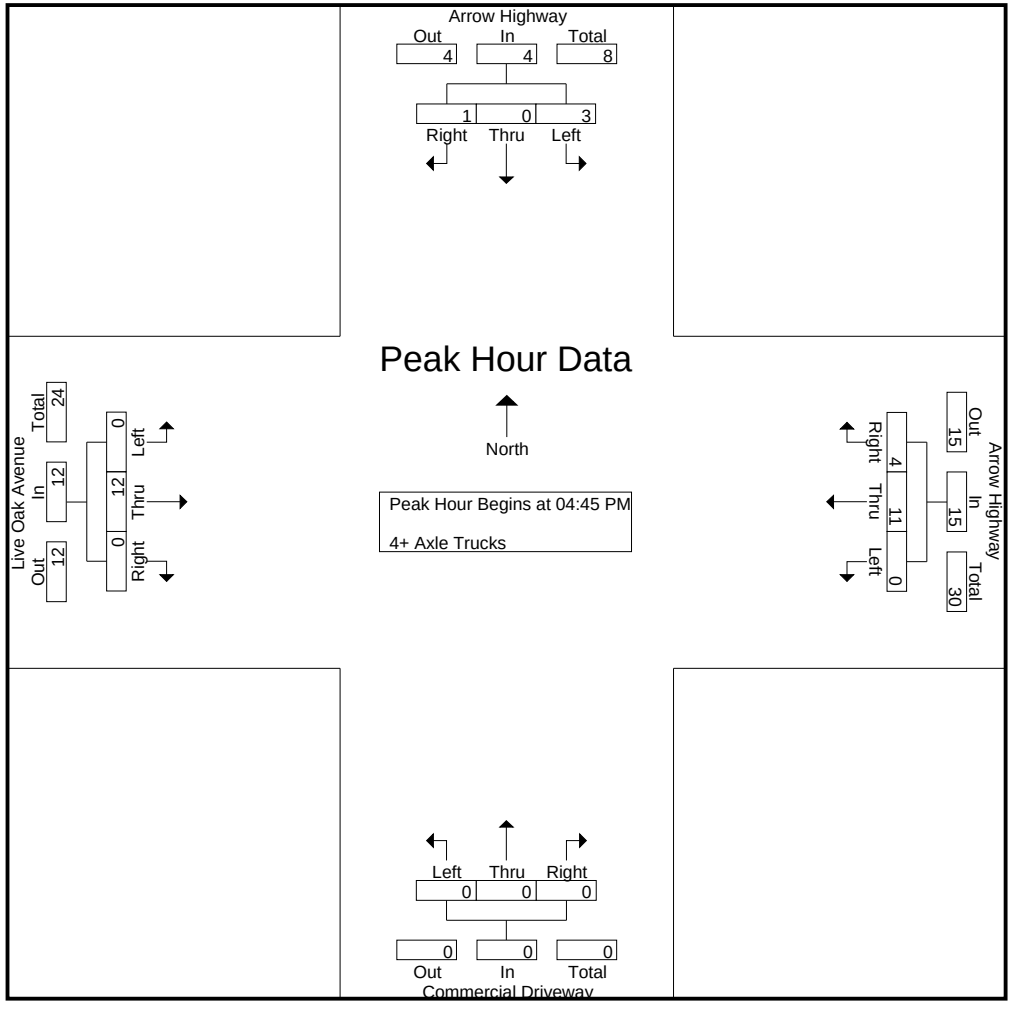

Counts Unlimited
PO Box 1178
Corona, CA 92878
(951) 268-6268

City of Irwindale
N/S: Arrow Highway
E/W: Live Oak Avenue/Arrow Highway
Weather: Clear

File Name : 12_IRW_Ar Lo PM
Site Code : 05117783
Start Date : 11/28/2017
Page No : 3

	Arrow Highway Southbound				Arrow Highway Westbound				Commercial Driveway Northbound				Live Oak Avenue Eastbound				
Start Time	Left	Thru	Right	App. Total	Left	Thru	Right	App. Total	Left	Thru	Right	App. Total	Left	Thru	Right	App. Total	Int. Total
Peak Hour Analysis From 04:45 PM to 05:30 PM - Peak 1 of 1																	
Peak Hour for Each Approach Begins at:																	
	04:45 PM				04:45 PM				04:45 PM				04:45 PM				
+0 mins.	1	0	0	1	0	4	0	4	0	0	0	0	0	3	0	3	
+15 mins.	0	0	0	0	0	2	**2**	4	0	0	0	0	0	4	0	4	
+30 mins.	0	0	0	0	0	**5**	1	**6**	0	0	0	0	0	0	0	0	
+45 mins.	**2**	0	**1**	**3**	0	0	1	1	0	0	0	0	0	**5**	0	**5**	
Total Volume	3	0	1	4	0	11	4	15	0	0	0	0	0	12	0	12	
% App. Total	75	0	25		0	73.3	26.7		0	0	0		0	100	0		
PHF	.375	.000	.250	.333	.000	.550	.500	.625	.000	.000	.000	.000	.000	.600	.000	.600	

Location: Irwindale
N/S: Arrow Highway
E/W: Live Oak Avenue /Arrow Highway

Date: 11/28/2017
Day: Tuesday

PEDESTRIANS

	North Leg Arrow Highway	East Leg Arrow Highway	South Leg Commercial Driveway	West Leg Live Oak Avenue	TOTAL
7:00 AM	0	0	0	0	0
7:15 AM	0	0	0	0	0
7:30 AM	0	0	0	0	0
7:45 AM	0	0	0	0	0
8:00 AM	0	0	0	0	0
8:15 AM	0	0	0	0	0
8:30 AM	0	0	0	0	0
8:45 AM	0	0	0	0	0
TOTAL VOLUMES:	0	0	0	0	0

	North Leg Arrow Highway	East Leg Arrow Highway	South Leg Commercial Driveway	West Leg Live Oak Avenue	TOTAL
4:00 PM	0	0	0	0	0
4:15 PM	0	0	0	0	0
4:30 PM	0	0	0	0	0
4:45 PM	0	0	0	0	0
5:00 PM	0	0	0	0	0
5:15 PM	0	0	0	3	3
5:30 PM	0	0	0	0	0
5:45 PM	0	0	0	0	0
TOTAL VOLUMES:	0	0	0	3	3

Counts Unlimited
P.O. Box 1178
Corona, CA 92878
(951) 268-6268

Location: Irwindale
N/S: Arrow Highway
E/W: Live Oak Avenue /Arrow Highway

Date: 11/28/2017
Day: Tuesday

BICYCLES

	North Leg Arrow Highway	East Leg Arrow Highway	South Leg Commercial Driveway	West Leg Live Oak Avenue	TOTAL
7:00 AM	0	0	1	1	2
7:15 AM	1	0	0	0	1
7:30 AM	0	0	1	1	2
7:45 AM	0	0	0	0	0
8:00 AM	0	0	2	1	3
8:15 AM	0	0	0	0	0
8:30 AM	0	0	1	0	1
8:45 AM	0	0	0	0	0
TOTAL VOLUMES:	1	0	5	3	9

	North Leg Arrow Highway	East Leg Arrow Highway	South Leg Commercial Driveway	West Leg Live Oak Avenue	TOTAL
4:00 PM	0	0	0	0	0
4:15 PM	0	0	1	1	2
4:30 PM	0	0	0	0	0
4:45 PM	1	0	0	0	1
5:00 PM	0	0	0	1	1
5:15 PM	0	0	0	0	0
5:30 PM	0	0	0	0	0
5:45 PM	0	0	0	0	0
TOTAL VOLUMES:	1	0	1	2	4

Counts Unlimited
P.O. Box 1178
Corona, CA 92878
(951) 268-6268

Counts Unlimited
PO Box 1178
Corona, CA 92878
(951) 268-6268

City of Irwindale
N/S: Maine Avenue
E/W: Arrow Highway
Weather: Clear

File Name : 13_IRW_Ma Ar AM
Site Code : 05117783
Start Date : 11/28/2017
Page No : 1

Groups Printed- Passenger Vehicles - Large 2 Axle Vehicles - 3 Axle Vehicles - 4+ Axle Trucks

	Arrow Highway Westbound				Maine Avenue Northbound				Arrow Highway Eastbound						
Start Time	Left	Thru	RTOR	App. Total	Left	Right	RTOR	App. Total	Thru	Right	RTOR	App. Total	Exclu. Total	Inclu. Total	Int. Total
07:00 AM	4	504	0	508	175	13	9	188	169	28	8	197	17	893	910
07:15 AM	7	656	0	663	187	26	22	213	167	31	10	198	32	1074	1106
07:30 AM	13	617	0	630	151	14	8	165	210	37	10	247	18	1042	1060
07:45 AM	27	525	0	552	140	33	16	173	260	52	16	312	32	1037	1069
Total	51	2302	0	2353	653	86	55	739	806	148	44	954	99	4046	4145
08:00 AM	14	490	0	504	128	23	15	151	232	52	10	284	25	939	964
08:15 AM	19	421	0	440	104	23	16	127	241	29	4	270	20	837	857
08:30 AM	13	403	0	416	84	18	14	102	190	43	7	233	21	751	772
08:45 AM	19	350	0	369	84	24	13	108	196	44	12	240	25	717	742
Total	65	1664	0	1729	400	88	58	488	859	168	33	1027	91	3244	3335
Grand Total	116	3966	0	4082	1053	174	113	1227	1665	316	77	1981	190	7290	7480
Apprch %	2.8	97.2			85.8	14.2			84	16					
Total %	1.6	54.4		56	14.4	2.4		16.8	22.8	4.3		27.2	2.5	97.5	
Passenger Vehicles	112	3646		3758	1004	168		1283	1391	301		1768	0	0	6809
% Passenger Vehicles	96.6	91.9	0	92.1	95.3	96.6	98.2	95.7	83.5	95.3	98.7	85.9	0	0	91
Large 2 Axle Vehicles	3	153		156	35	4		41	109	13		123	0	0	320
% Large 2 Axle Vehicles	2.6	3.9	0	3.8	3.3	2.3	1.8	3.1	6.5	4.1	1.3	6	0	0	4.3
3 Axle Vehicles	0	37		37	6	0		6	46	1		47	0	0	90
% 3 Axle Vehicles	0	0.9	0	0.9	0.6	0	0	0.4	2.8	0.3	0	2.3	0	0	1.2
4+ Axle Trucks	1	130		131	8	2		10	119	1		120	0	0	261
% 4+ Axle Trucks	0.9	3.3	0	3.2	0.8	1.1	0	0.7	7.1	0.3	0	5.8	0	0	3.5

	Arrow Highway Westbound			Maine Avenue Northbound			Arrow Highway Eastbound			
Start Time	Left	Thru	App. Total	Left	Right	App. Total	Thru	Right	App. Total	Int. Total
Peak Hour Analysis From 07:00 AM to 08:45 AM - Peak 1 of 1										
Peak Hour for Entire Intersection Begins at 07:15 AM										
07:15 AM	7	**656**	**663**	**187**	26	**213**	167	31	198	**1074**
07:30 AM	13	617	630	151	14	165	210	37	247	1042
07:45 AM	**27**	525	552	140	**33**	173	**260**	**52**	**312**	1037
08:00 AM	14	490	504	128	23	151	232	52	284	939
Total Volume	61	2288	2349	606	96	702	869	172	1041	4092
% App. Total	2.6	97.4		86.3	13.7		83.5	16.5		
PHF	.565	.872	.886	.810	.727	.824	.836	.827	.834	.953

Counts Unlimited
PO Box 1178
Corona, CA 92878
(951) 268-6268

City of Irwindale
N/S: Maine Avenue
E/W: Arrow Highway
Weather: Clear

File Name : 13_IRW_Ma Ar AM
Site Code : 05117783
Start Date : 11/28/2017
Page No : 2

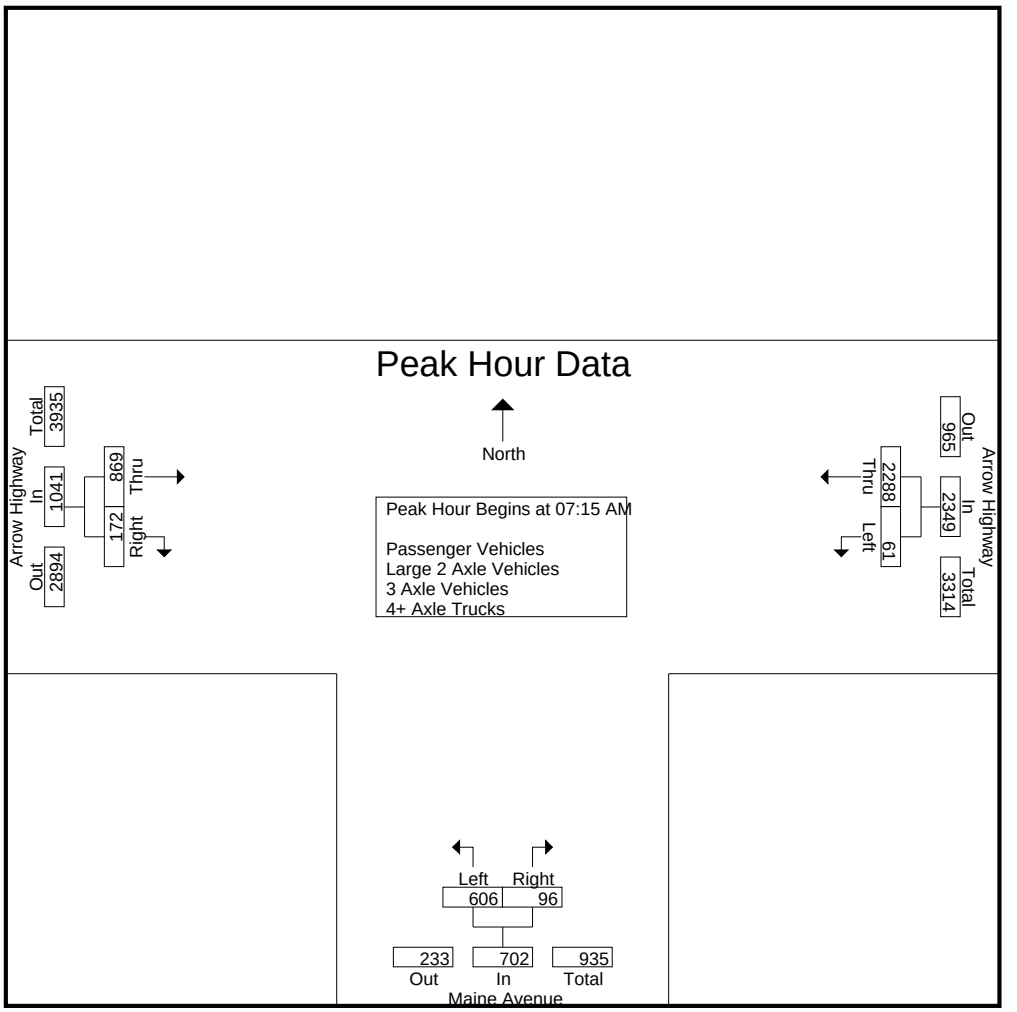

Peak Hour Analysis From 07:00 AM to 08:45 AM - Peak 1 of 1
Peak Hour for Each Approach Begins at:

	07:00 AM			07:00 AM			07:30 AM		
+0 mins.	4	504	508	175	13	188	210	37	247
+15 mins.	7	**656**	**663**	**187**	26	**213**	**260**	**52**	**312**
+30 mins.	13	617	630	151	14	165	232	52	284
+45 mins.	**27**	525	552	140	**33**	173	241	29	270
Total Volume	51	2302	2353	653	86	739	943	170	1113
% App. Total	2.2	97.8		88.4	11.6		84.7	15.3	
PHF	.472	.877	.887	.873	.652	.867	.907	.817	.892

Counts Unlimited
PO Box 1178
Corona, CA 92878
(951) 268-6268

City of Irwindale
N/S: Maine Avenue
E/W: Arrow Highway
Weather: Clear

File Name : 13_IRW_Ma Ar AM
Site Code : 05117783
Start Date : 11/28/2017
Page No : 1

Groups Printed- Passenger Vehicles

	Arrow Highway Westbound				Maine Avenue Northbound				Arrow Highway Eastbound						
Start Time	Left	Thru	RTOR	App. Total	Left	Right	RTOR	App. Total	Thru	Right	RTOR	App. Total	Exclu. Total	Inclu. Total	Int. Total
07:00 AM	4	480	0	484	164	13	9	177	135	24	8	159	17	820	837
07:15 AM	7	607	0	614	178	24	21	202	146	31	10	177	31	993	1024
07:30 AM	13	575	0	588	143	13	8	156	177	35	10	212	18	956	974
07:45 AM	27	488	0	515	134	33	16	167	218	52	16	270	32	952	984
Total	51	2150	0	2201	619	83	54	702	676	142	44	818	98	3721	3819
08:00 AM	13	456	0	469	126	23	15	149	202	51	10	253	25	871	896
08:15 AM	16	380	0	396	98	21	15	119	192	25	4	217	19	732	751
08:30 AM	13	357	0	370	80	18	14	98	165	41	7	206	21	674	695
08:45 AM	19	303	0	322	81	23	13	104	156	42	11	198	24	624	648
Total	61	1496	0	1557	385	85	57	470	715	159	32	874	89	2901	2990
Grand Total	112	3646	0	3758	1004	168	111	1172	1391	301	76	1692	187	6622	6809
Apprch %	3	97			85.7	14.3			82.2	17.8					
Total %	1.7	55.1		56.8	15.2	2.5		17.7	21	4.5		25.6	2.7	97.3	

	Arrow Highway Westbound			Maine Avenue Northbound			Arrow Highway Eastbound			
Start Time	Left	Thru	App. Total	Left	Right	App. Total	Thru	Right	App. Total	Int. Total
Peak Hour Analysis From 07:15 AM to 08:00 AM - Peak 1 of 1										
Peak Hour for Entire Intersection Begins at 07:15 AM										
07:15 AM	7	**607**	**614**	**178**	24	**202**	146	31	177	**993**
07:30 AM	13	575	588	143	13	156	177	35	212	956
07:45 AM	**27**	488	515	134	**33**	167	**218**	**52**	**270**	952
08:00 AM	13	456	469	126	23	149	202	51	253	871
Total Volume	60	2126	2186	581	93	674	743	169	912	3772
% App. Total	2.7	97.3		86.2	13.8		81.5	18.5		
PHF	.556	.876	.890	.816	.705	.834	.852	.813	.844	.950

Counts Unlimited
PO Box 1178
Corona, CA 92878
(951) 268-6268

City of Irwindale
N/S: Maine Avenue
E/W: Arrow Highway
Weather: Clear

File Name : 13_IRW_Ma Ar AM
Site Code : 05117783
Start Date : 11/28/2017
Page No : 2

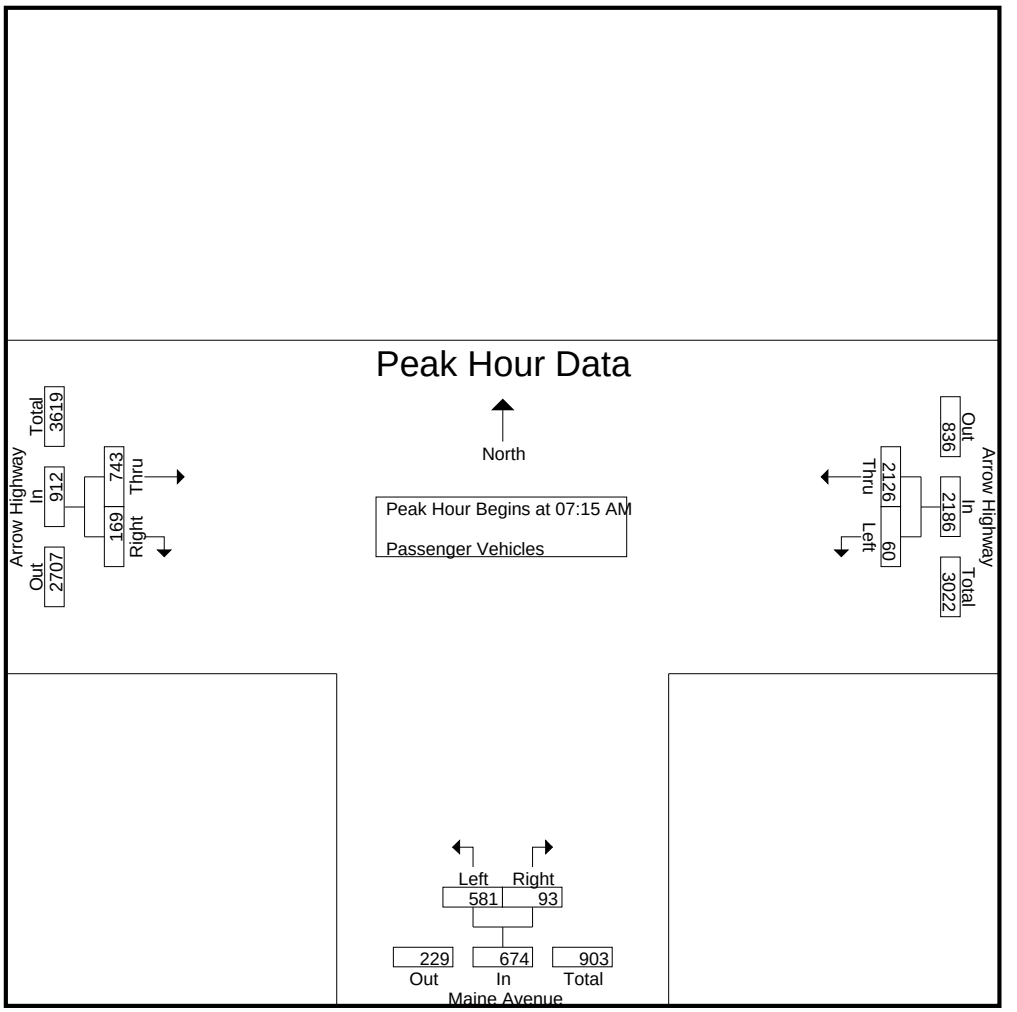

Peak Hour Analysis From 07:15 AM to 08:00 AM - Peak 1 of 1
Peak Hour for Each Approach Begins at:

	07:15 AM			07:15 AM			07:15 AM		
+0 mins.	7	**607**	**614**	**178**	24	**202**	146	31	177
+15 mins.	13	575	588	143	13	156	177	35	212
+30 mins.	**27**	488	515	134	**33**	167	**218**	**52**	**270**
+45 mins.	13	456	469	126	23	149	202	51	253
Total Volume	60	2126	2186	581	93	674	743	169	912
% App. Total	2.7	97.3		86.2	13.8		81.5	18.5	
PHF	.556	.876	.890	.816	.705	.834	.852	.813	.844

Counts Unlimited
PO Box 1178
Corona, CA 92878
(951) 268-6268

City of Irwindale
N/S: Maine Avenue
E/W: Arrow Highway
Weather: Clear

File Name : 13_IRW_Ma Ar AM
Site Code : 05117783
Start Date : 11/28/2017
Page No : 1

Groups Printed- Large 2 Axle Vehicles

	Arrow Highway Westbound				Maine Avenue Northbound				Arrow Highway Eastbound						
Start Time	Left	Thru	RTOR	App. Total	Left	Right	RTOR	App. Total	Thru	Right	RTOR	App. Total	Exclu. Total	Inclu. Total	Int. Total
07:00 AM	0	15	0	15	8	0	0	8	13	3	0	16	0	39	39
07:15 AM	0	24	0	24	7	1	1	8	9	0	0	9	1	41	42
07:30 AM	0	25	0	25	5	1	0	6	9	2	0	11	0	42	42
07:45 AM	0	17	0	17	3	0	0	3	20	0	0	20	0	40	40
Total	0	81	0	81	23	2	1	25	51	5	0	56	1	162	163
08:00 AM	1	9	0	10	1	0	0	1	15	0	0	15	0	26	26
08:15 AM	2	20	0	22	4	1	1	5	25	4	0	29	1	56	57
08:30 AM	0	19	0	19	4	0	0	4	4	2	0	6	0	29	29
08:45 AM	0	24	0	24	3	1	0	4	14	2	1	16	1	44	45
Total	3	72	0	75	12	2	1	14	58	8	1	66	2	155	157
Grand Total	3	153	0	156	35	4	2	39	109	13	1	122	3	317	320
Apprch %	1.9	98.1			89.7	10.3			89.3	10.7					
Total %	0.9	48.3		49.2	11	1.3		12.3	34.4	4.1		38.5	0.9	99.1	

	Arrow Highway Westbound			Maine Avenue Northbound			Arrow Highway Eastbound			
Start Time	Left	Thru	App. Total	Left	Right	App. Total	Thru	Right	App. Total	Int. Total
Peak Hour Analysis From 07:15 AM to 08:00 AM - Peak 1 of 1										
Peak Hour for Entire Intersection Begins at 07:15 AM										
07:15 AM	0	24	24	**7**	**1**	**8**	9	0	9	41
07:30 AM	0	**25**	**25**	5	1	6	9	**2**	11	**42**
07:45 AM	0	17	17	3	0	3	**20**	0	**20**	40
08:00 AM	**1**	9	10	1	0	1	15	0	15	26
Total Volume	1	75	76	16	2	18	53	2	55	149
% App. Total	1.3	98.7		88.9	11.1		96.4	3.6		
PHF	.250	.750	.760	.571	.500	.563	.663	.250	.688	.887

Counts Unlimited
PO Box 1178
Corona, CA 92878
(951) 268-6268

City of Irwindale
N/S: Maine Avenue
E/W: Arrow Highway
Weather: Clear

File Name : 13_IRW_Ma Ar AM
Site Code : 05117783
Start Date : 11/28/2017
Page No : 2

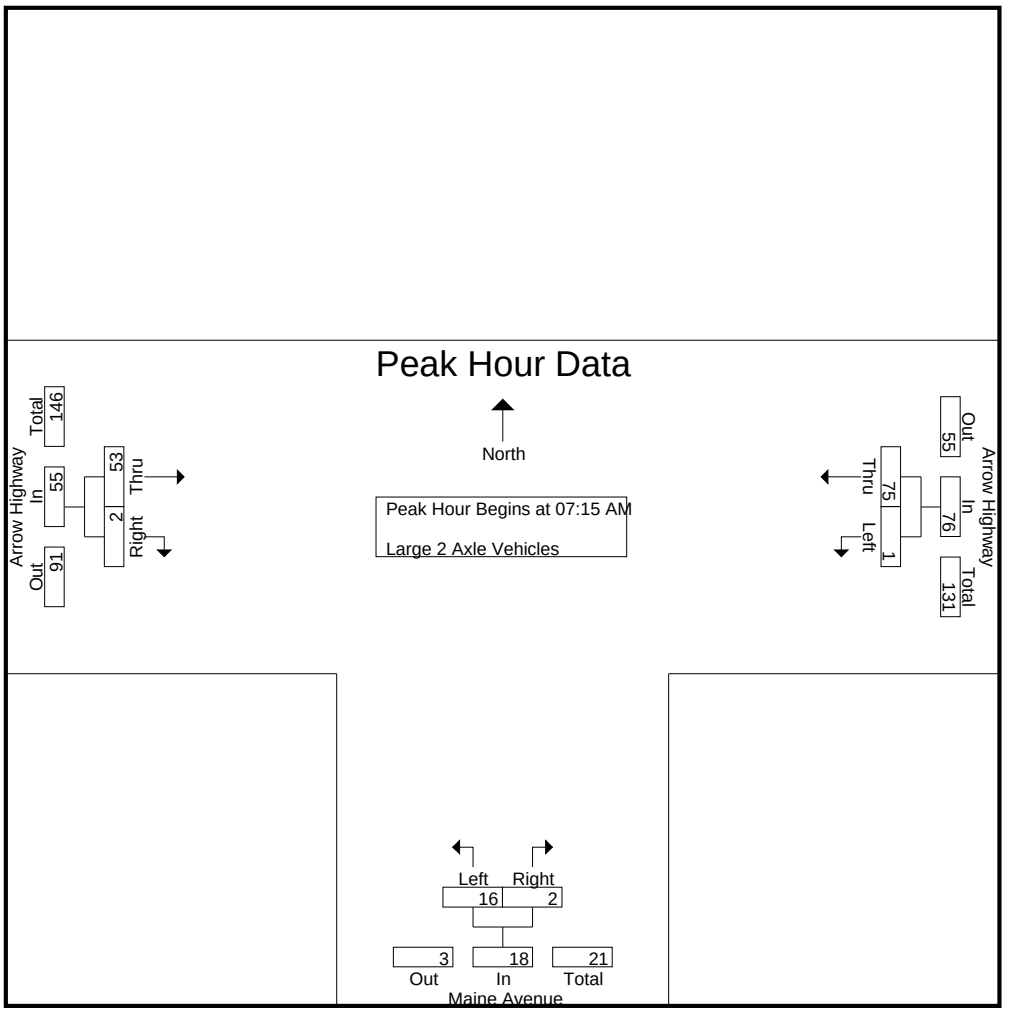

Peak Hour Analysis From 07:15 AM to 08:00 AM - Peak 1 of 1
Peak Hour for Each Approach Begins at:

	07:15 AM			07:15 AM			07:15 AM		
+0 mins.	0	24	24	**7**	**1**	**8**	9	0	9
+15 mins.	0	**25**	**25**	5	1	6	9	**2**	11
+30 mins.	0	17	17	3	0	3	**20**	0	**20**
+45 mins.	**1**	9	10	1	0	1	15	0	15
Total Volume	1	75	76	16	2	18	53	2	55
% App. Total	1.3	98.7		88.9	11.1		96.4	3.6	
PHF	.250	.750	.760	.571	.500	.563	.663	.250	.688

Counts Unlimited
PO Box 1178
Corona, CA 92878
(951) 268-6268

City of Irwindale
N/S: Maine Avenue
E/W: Arrow Highway
Weather: Clear

File Name : 13_IRW_Ma Ar AM
Site Code : 05117783
Start Date : 11/28/2017
Page No : 1

Groups Printed- 3 Axle Vehicles

	Arrow Highway Westbound				Maine Avenue Northbound				Arrow Highway Eastbound						
Start Time	Left	Thru	RTOR	App. Total	Left	Right	RTOR	App. Total	Thru	Right	RTOR	App. Total	Exclu. Total	Inclu. Total	Int. Total
07:00 AM	0	5	0	5	0	0	0	0	4	1	0	5	0	10	10
07:15 AM	0	1	0	1	1	0	0	1	1	0	0	1	0	3	3
07:30 AM	0	2	0	2	1	0	0	1	9	0	0	9	0	12	12
07:45 AM	0	3	0	3	3	0	0	3	6	0	0	6	0	12	12
Total	0	11	0	11	5	0	0	5	20	1	0	21	0	37	37
08:00 AM	0	5	0	5	0	0	0	0	2	0	0	2	0	7	7
08:15 AM	0	7	0	7	1	0	0	1	5	0	0	5	0	13	13
08:30 AM	0	5	0	5	0	0	0	0	10	0	0	10	0	15	15
08:45 AM	0	9	0	9	0	0	0	0	9	0	0	9	0	18	18
Total	0	26	0	26	1	0	0	1	26	0	0	26	0	53	53
Grand Total	0	37	0	37	6	0	0	6	46	1	0	47	0	90	90
Apprch %	0	100			100	0			97.9	2.1					
Total %	0	41.1		41.1	6.7	0		6.7	51.1	1.1		52.2	0	100	

	Arrow Highway Westbound			Maine Avenue Northbound			Arrow Highway Eastbound			
Start Time	Left	Thru	App. Total	Left	Right	App. Total	Thru	Right	App. Total	Int. Total
Peak Hour Analysis From 07:15 AM to 08:00 AM - Peak 1 of 1										
Peak Hour for Entire Intersection Begins at 07:15 AM										
07:15 AM	0	1	1	1	0	1	1	0	1	3
07:30 AM	0	2	2	1	0	1	**9**	0	**9**	**12**
07:45 AM	0	3	3	**3**	0	**3**	6	0	6	12
08:00 AM	0	**5**	**5**	0	0	0	2	0	2	7
Total Volume	0	11	11	5	0	5	18	0	18	34
% App. Total	0	100		100	0		100	0		
PHF	.000	.550	.550	.417	.000	.417	.500	.000	.500	.708

Counts Unlimited
PO Box 1178
Corona, CA 92878
(951) 268-6268

City of Irwindale
N/S: Maine Avenue
E/W: Arrow Highway
Weather: Clear

File Name : 13_IRW_Ma Ar AM
Site Code : 05117783
Start Date : 11/28/2017
Page No : 2

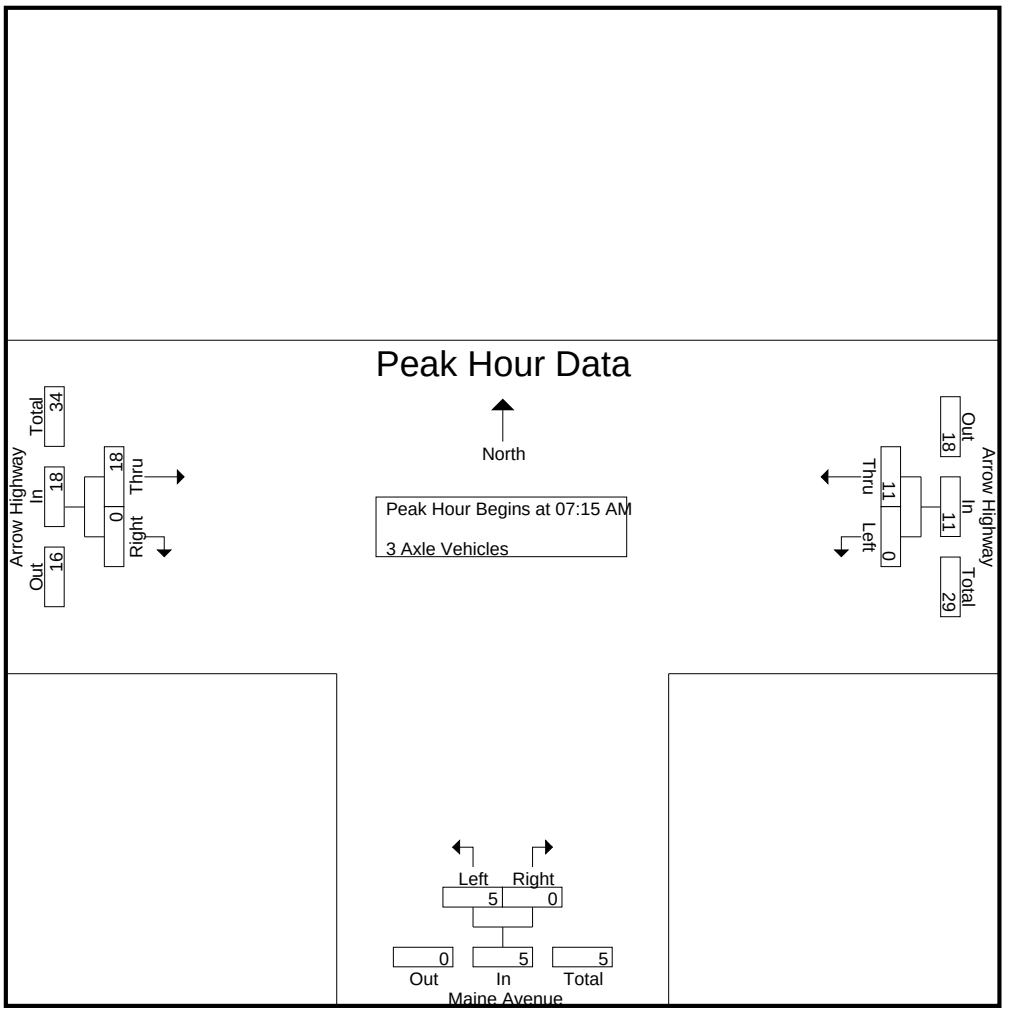

Peak Hour Analysis From 07:15 AM to 08:00 AM - Peak 1 of 1
Peak Hour for Each Approach Begins at:

	07:15 AM			07:15 AM			07:15 AM		
+0 mins.	0	1	1	1	0	1	1	0	1
+15 mins.	0	2	2	1	0	1	**9**	0	**9**
+30 mins.	0	3	3	**3**	0	**3**	6	0	6
+45 mins.	0	**5**	**5**	0	0	0	2	0	2
Total Volume	0	11	11	5	0	5	18	0	18
% App. Total	0	100		100	0		100	0	
PHF	.000	.550	.550	.417	.000	.417	.500	.000	.500

Counts Unlimited
PO Box 1178
Corona, CA 92878
(951) 268-6268

City of Irwindale
N/S: Maine Avenue
E/W: Arrow Highway
Weather: Clear

File Name : 13_IRW_Ma Ar AM
Site Code : 05117783
Start Date : 11/28/2017
Page No : 1

Groups Printed- 4+ Axle Trucks

	Arrow Highway Westbound				Maine Avenue Northbound				Arrow Highway Eastbound						
Start Time	Left	Thru	RTOR	App. Total	Left	Right	RTOR	App. Total	Thru	Right	RTOR	App. Total	Exclu. Total	Inclu. Total	Int. Total
07:00 AM	0	4	0	4	3	0	0	3	17	0	0	17	0	24	24
07:15 AM	0	24	0	24	1	1	0	2	11	0	0	11	0	37	37
07:30 AM	0	15	0	15	2	0	0	2	15	0	0	15	0	32	32
07:45 AM	0	17	0	17	0	0	0	0	16	0	0	16	0	33	33
Total	0	60	0	60	6	1	0	7	59	0	0	59	0	126	126
08:00 AM	0	20	0	20	1	0	0	1	13	1	0	14	0	35	35
08:15 AM	1	14	0	15	1	1	0	2	19	0	0	19	0	36	36
08:30 AM	0	22	0	22	0	0	0	0	11	0	0	11	0	33	33
08:45 AM	0	14	0	14	0	0	0	0	17	0	0	17	0	31	31
Total	1	70	0	71	2	1	0	3	60	1	0	61	0	135	135
Grand Total	1	130	0	131	8	2	0	10	119	1	0	120	0	261	261
Apprch %	0.8	99.2			80	20			99.2	0.8					
Total %	0.4	49.8		50.2	3.1	0.8		3.8	45.6	0.4		46	0	100	

	Arrow Highway Westbound			Maine Avenue Northbound			Arrow Highway Eastbound			
Start Time	Left	Thru	App. Total	Left	Right	App. Total	Thru	Right	App. Total	Int. Total
Peak Hour Analysis From 07:15 AM to 08:00 AM - Peak 1 of 1										
Peak Hour for Entire Intersection Begins at 07:15 AM										
07:15 AM	0	**24**	**24**	1	**1**	**2**	11	0	11	**37**
07:30 AM	0	15	15	**2**	0	2	15	0	15	32
07:45 AM	0	17	17	0	0	0	**16**	0	**16**	33
08:00 AM	0	20	20	1	0	1	13	**1**	14	35
Total Volume	0	76	76	4	1	5	55	1	56	137
% App. Total	0	100		80	20		98.2	1.8		
PHF	.000	.792	.792	.500	.250	.625	.859	.250	.875	.926

Counts Unlimited
PO Box 1178
Corona, CA 92878
(951) 268-6268

City of Irwindale
N/S: Maine Avenue
E/W: Arrow Highway
Weather: Clear

File Name : 13_IRW_Ma Ar AM
Site Code : 05117783
Start Date : 11/28/2017
Page No : 2

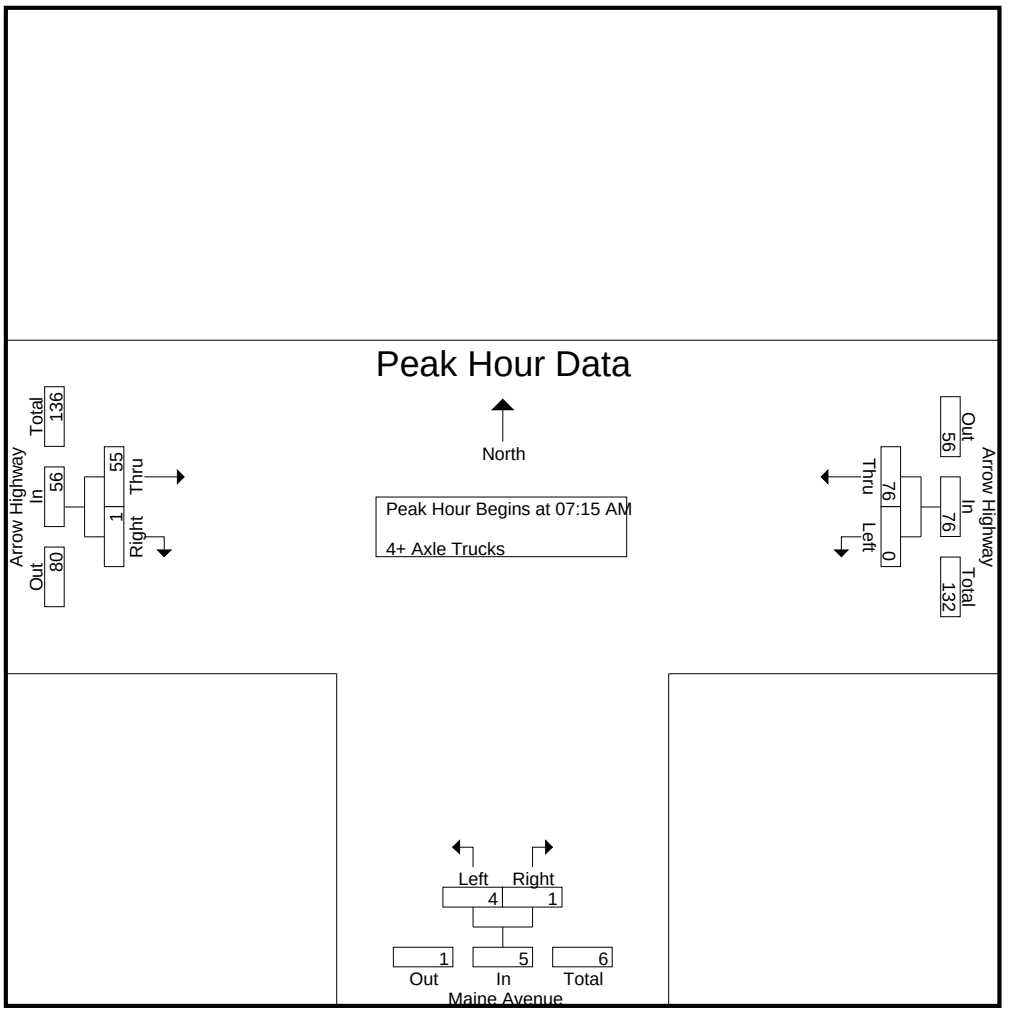

Peak Hour Analysis From 07:15 AM to 08:00 AM - Peak 1 of 1
Peak Hour for Each Approach Begins at:

	07:15 AM			07:15 AM			07:15 AM		
+0 mins.	0	**24**	**24**	1	**1**	**2**	11	0	11
+15 mins.	0	15	15	**2**	0	2	15	0	15
+30 mins.	0	17	17	0	0	0	**16**	0	**16**
+45 mins.	0	20	20	1	0	1	13	**1**	14
Total Volume	0	76	76	4	1	5	55	1	56
% App. Total	0	100		80	20		98.2	1.8	
PHF	.000	.792	.792	.500	.250	.625	.859	.250	.875

Counts Unlimited
PO Box 1178
Corona, CA 92878
(951) 268-6268

City of Irwindale
N/S: Maine Avenue
E/W: Arrow Highway
Weather: Clear

File Name : 13_IRW_Ma Ar PM
Site Code : 05117783
Start Date : 11/28/2017
Page No : 1

Groups Printed- Passenger Vehicles - Large 2 Axle Vehicles - 3 Axle Vehicles - 4+ Axle Trucks

	Arrow Highway Westbound				Maine Avenue Northbound				Arrow Highway Eastbound						
Start Time	Left	Thru	RTOR	App. Total	Left	Right	RTOR	App. Total	Thru	Right	RTOR	App. Total	Exclu. Total	Inclu. Total	Int. Total
04:00 PM	8	245	0	253	57	11	5	68	448	127	22	575	27	896	923
04:15 PM	21	205	0	226	65	16	8	81	445	101	18	546	26	853	879
04:30 PM	20	258	0	278	78	21	6	99	464	111	25	575	31	952	983
04:45 PM	19	243	0	262	50	12	8	62	457	138	27	595	35	919	954
Total	68	951	0	1019	250	60	27	310	1814	477	92	2291	119	3620	3739
05:00 PM	15	287	0	302	60	14	9	74	494	131	28	625	37	1001	1038
05:15 PM	16	258	0	274	59	10	6	69	434	175	30	609	36	952	988
05:30 PM	13	238	0	251	61	16	10	77	440	155	35	595	45	923	968
05:45 PM	20	213	0	233	56	20	2	76	438	152	18	590	20	899	919
Total	64	996	0	1060	236	60	27	296	1806	613	111	2419	138	3775	3913
Grand Total	132	1947	0	2079	486	120	54	606	3620	1090	203	4710	257	7395	7652
Apprch %	6.3	93.7			80.2	19.8			76.9	23.1					
Total %	1.8	26.3		28.1	6.6	1.6		8.2	49	14.7		63.7	3.4	96.6	
Passenger Vehicles	128	1798		1926	474	111		637	3432	1057		4687	0	0	7250
% Passenger Vehicles	97	92.3	0	92.6	97.5	92.5	96.3	96.5	94.8	97	97.5	95.4	0	0	94.7
Large 2 Axle Vehicles	3	46		49	7	6		15	123	27		154	0	0	218
% Large 2 Axle Vehicles	2.3	2.4	0	2.4	1.4	5	3.7	2.3	3.4	2.5	2	3.1	0	0	2.8
3 Axle Vehicles	1	60		61	3	2		5	24	3		27	0	0	93
% 3 Axle Vehicles	0.8	3.1	0	2.9	0.6	1.7	0	0.8	0.7	0.3	0	0.5	0	0	1.2
4+ Axle Trucks	0	43		43	2	1		3	41	3		45	0	0	91
% 4+ Axle Trucks	0	2.2	0	2.1	0.4	0.8	0	0.5	1.1	0.3	0.5	0.9	0	0	1.2

	Arrow Highway Westbound			Maine Avenue Northbound			Arrow Highway Eastbound			
Start Time	Left	Thru	App. Total	Left	Right	App. Total	Thru	Right	App. Total	Int. Total
Peak Hour Analysis From 04:00 PM to 05:45 PM - Peak 1 of 1										
Peak Hour for Entire Intersection Begins at 04:30 PM										
04:30 PM	**20**	258	278	**78**	**21**	**99**	464	111	575	952
04:45 PM	19	243	262	50	12	62	457	138	595	919
05:00 PM	15	**287**	**302**	60	14	74	**494**	131	**625**	**1001**
05:15 PM	16	258	274	59	10	69	434	**175**	609	952
Total Volume	70	1046	1116	247	57	304	1849	555	2404	3824
% App. Total	6.3	93.7		81.2	18.8		76.9	23.1		
PHF	.875	.911	.924	.792	.679	.768	.936	.793	.962	.955

Counts Unlimited
PO Box 1178
Corona, CA 92878
(951) 268-6268

City of Irwindale
N/S: Maine Avenue
E/W: Arrow Highway
Weather: Clear

File Name : 13_IRW_Ma Ar PM
Site Code : 05117783
Start Date : 11/28/2017
Page No : 2

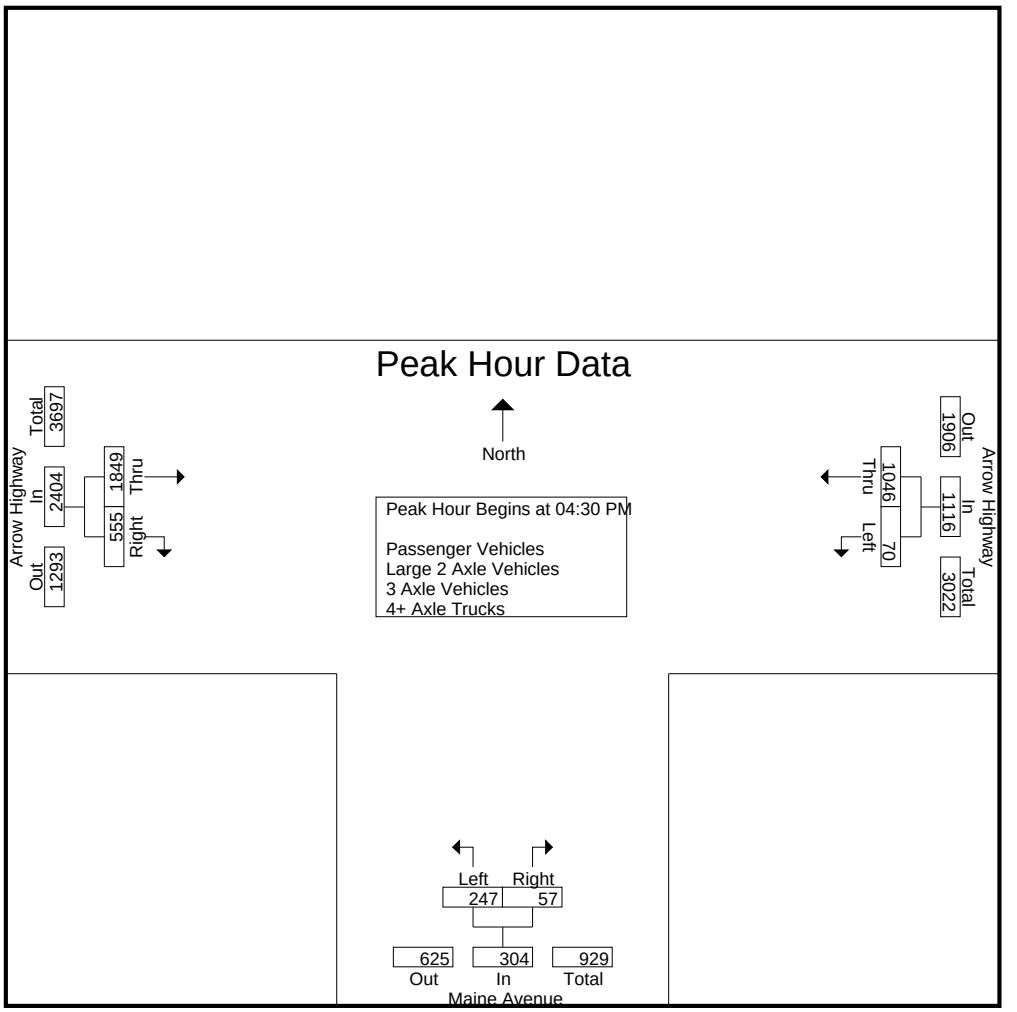

Peak Hour Analysis From 04:00 PM to 05:45 PM - Peak 1 of 1
Peak Hour for Each Approach Begins at:

	04:30 PM			04:15 PM			04:45 PM		
+0 mins.	**20**	258	278	65	16	81	457	138	595
+15 mins.	19	243	262	**78**	**21**	**99**	**494**	131	**625**
+30 mins.	15	**287**	**302**	50	12	62	434	**175**	609
+45 mins.	16	258	274	60	14	74	440	155	595
Total Volume	70	1046	1116	253	63	316	1825	599	2424
% App. Total	6.3	93.7		80.1	19.9		75.3	24.7	
PHF	.875	.911	.924	.811	.750	.798	.924	.856	.970

Counts Unlimited
PO Box 1178
Corona, CA 92878
(951) 268-6268

City of Irwindale
N/S: Maine Avenue
E/W: Arrow Highway
Weather: Clear

File Name : 13_IRW_Ma Ar PM
Site Code : 05117783
Start Date : 11/28/2017
Page No : 1

Groups Printed- Passenger Vehicles

	Arrow Highway Westbound				Maine Avenue Northbound				Arrow Highway Eastbound						
Start Time	Left	Thru	RTOR	App. Total	Left	Right	RTOR	App. Total	Thru	Right	RTOR	App. Total	Exclu. Total	Inclu. Total	Int. Total
04:00 PM	8	216	0	224	56	10	5	66	402	120	22	522	27	812	839
04:15 PM	21	183	0	204	64	15	8	79	416	94	16	510	24	793	817
04:30 PM	19	227	0	246	77	20	6	97	435	109	24	544	30	887	917
04:45 PM	17	233	0	250	47	10	7	57	440	133	26	573	33	880	913
Total	65	859	0	924	244	55	26	299	1693	456	88	2149	114	3372	3486
05:00 PM	15	273	0	288	56	12	9	68	469	129	28	598	37	954	991
05:15 PM	16	239	0	255	58	9	5	67	424	171	29	595	34	917	951
05:30 PM	12	220	0	232	61	16	10	77	423	151	35	574	45	883	928
05:45 PM	20	207	0	227	55	19	2	74	423	150	18	573	20	874	894
Total	63	939	0	1002	230	56	26	286	1739	601	110	2340	136	3628	3764
Grand Total	128	1798	0	1926	474	111	52	585	3432	1057	198	4489	250	7000	7250
Apprch %	6.6	93.4			81	19			76.5	23.5					
Total %	1.8	25.7		27.5	6.8	1.6		8.4	49	15.1		64.1	3.4	96.6	

	Arrow Highway Westbound			Maine Avenue Northbound			Arrow Highway Eastbound			
Start Time	Left	Thru	App. Total	Left	Right	App. Total	Thru	Right	App. Total	Int. Total
Peak Hour Analysis From 04:30 PM to 05:15 PM - Peak 1 of 1										
Peak Hour for Entire Intersection Begins at 04:30 PM										
04:30 PM	**19**	227	246	**77**	**20**	**97**	435	109	544	887
04:45 PM	17	233	250	47	10	57	440	133	573	880
05:00 PM	15	**273**	**288**	56	12	68	**469**	129	**598**	**954**
05:15 PM	16	239	255	58	9	67	424	**171**	595	917
Total Volume	67	972	1039	238	51	289	1768	542	2310	3638
% App. Total	6.4	93.6		82.4	17.6		76.5	23.5		
PHF	.882	.890	.902	.773	.638	.745	.942	.792	.966	.953

Counts Unlimited
PO Box 1178
Corona, CA 92878
(951) 268-6268

City of Irwindale
N/S: Maine Avenue
E/W: Arrow Highway
Weather: Clear

File Name : 13_IRW_Ma Ar PM
Site Code : 05117783
Start Date : 11/28/2017
Page No : 2

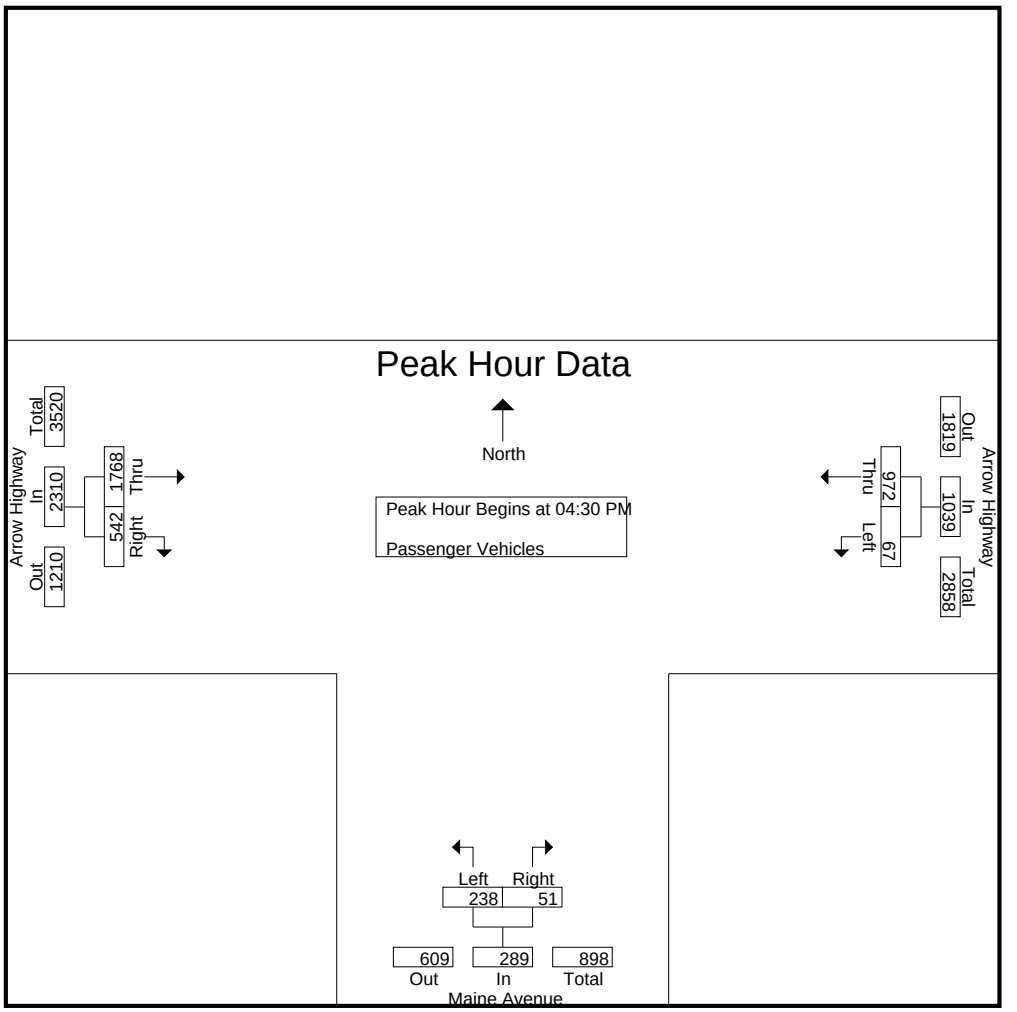

Peak Hour Analysis From 04:30 PM to 05:15 PM - Peak 1 of 1
Peak Hour for Each Approach Begins at:

	04:30 PM			04:30 PM			04:30 PM		
+0 mins.	**19**	227	246	**77**	**20**	**97**	435	109	544
+15 mins.	17	233	250	47	10	57	440	133	573
+30 mins.	15	**273**	**288**	56	12	68	**469**	129	**598**
+45 mins.	16	239	255	58	9	67	424	**171**	595
Total Volume	67	972	1039	238	51	289	1768	542	2310
% App. Total	6.4	93.6		82.4	17.6		76.5	23.5	
PHF	.882	.890	.902	.773	.638	.745	.942	.792	.966

Counts Unlimited
PO Box 1178
Corona, CA 92878
(951) 268-6268

City of Irwindale
N/S: Maine Avenue
E/W: Arrow Highway
Weather: Clear

File Name : 13_IRW_Ma Ar PM
Site Code : 05117783
Start Date : 11/28/2017
Page No : 1

Groups Printed- Large 2 Axle Vehicles

	Arrow Highway Westbound				Maine Avenue Northbound				Arrow Highway Eastbound						
Start Time	Left	Thru	RTOR	App. Total	Left	Right	RTOR	App. Total	Thru	Right	RTOR	App. Total	Exclu. Total	Inclu. Total	Int. Total
04:00 PM	0	5	0	5	1	1	0	2	29	5	0	34	0	41	41
04:15 PM	0	8	0	8	1	1	0	2	21	5	1	26	1	36	37
04:30 PM	1	8	0	9	0	1	0	1	19	1	1	20	1	30	31
04:45 PM	1	4	0	5	3	1	1	4	10	4	1	14	2	23	25
Total	2	25	0	27	5	4	1	9	79	15	3	94	4	130	134
05:00 PM	0	2	0	2	2	0	0	2	15	2	0	17	0	21	21
05:15 PM	0	10	0	10	0	1	1	1	9	4	1	13	2	24	26
05:30 PM	1	6	0	7	0	0	0	0	9	4	0	13	0	20	20
05:45 PM	0	3	0	3	0	1	0	1	11	2	0	13	0	17	17
Total	1	21	0	22	2	2	1	4	44	12	1	56	2	82	84
Grand Total	3	46	0	49	7	6	2	13	123	27	4	150	6	212	218
Apprch %	6.1	93.9			53.8	46.2			82	18					
Total %	1.4	21.7		23.1	3.3	2.8		6.1	58	12.7		70.8	2.8	97.2	

	Arrow Highway Westbound			Maine Avenue Northbound			Arrow Highway Eastbound			
Start Time	Left	Thru	App. Total	Left	Right	App. Total	Thru	Right	App. Total	Int. Total
Peak Hour Analysis From 04:30 PM to 05:15 PM - Peak 1 of 1										
Peak Hour for Entire Intersection Begins at 04:30 PM										
04:30 PM	**1**	8	9	0	**1**	1	**19**	1	**20**	**30**
04:45 PM	1	4	5	**3**	1	**4**	10	**4**	14	23
05:00 PM	0	2	2	2	0	2	15	2	17	21
05:15 PM	0	**10**	**10**	0	1	1	9	4	13	24
Total Volume	2	24	26	5	3	8	53	11	64	98
% App. Total	7.7	92.3		62.5	37.5		82.8	17.2		
PHF	.500	.600	.650	.417	.750	.500	.697	.688	.800	.817

Counts Unlimited
PO Box 1178
Corona, CA 92878
(951) 268-6268

City of Irwindale
N/S: Maine Avenue
E/W: Arrow Highway
Weather: Clear

File Name : 13_IRW_Ma Ar PM
Site Code : 05117783
Start Date : 11/28/2017
Page No : 2

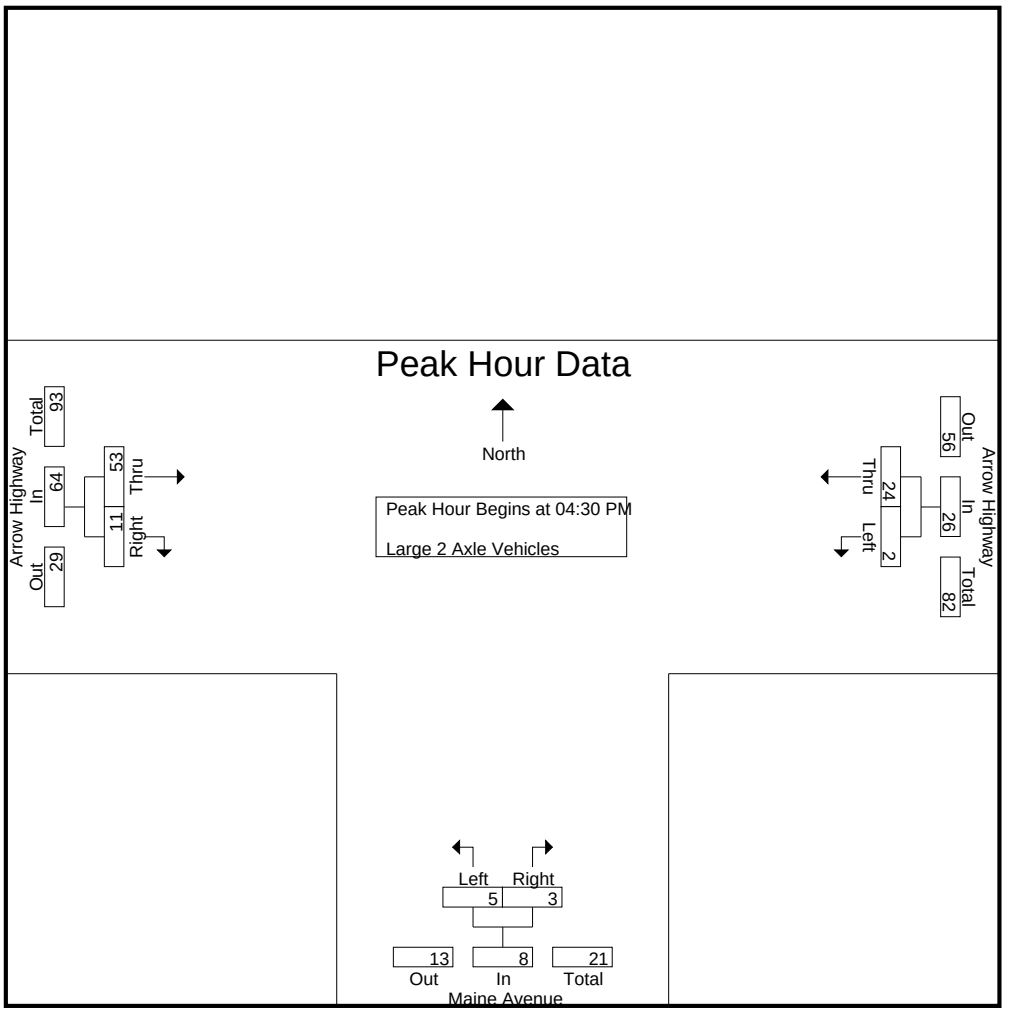

Peak Hour Analysis From 04:30 PM to 05:15 PM - Peak 1 of 1
Peak Hour for Each Approach Begins at:

	04:30 PM			04:30 PM			04:30 PM		
+0 mins.	**1**	8	9	0	**1**	1	**19**	1	**20**
+15 mins.	1	4	5	**3**	1	**4**	10	**4**	14
+30 mins.	0	2	2	2	0	2	15	2	17
+45 mins.	0	**10**	**10**	0	1	1	9	4	13
Total Volume	2	24	26	5	3	8	53	11	64
% App. Total	7.7	92.3		62.5	37.5		82.8	17.2	
PHF	.500	.600	.650	.417	.750	.500	.697	.688	.800

Counts Unlimited
PO Box 1178
Corona, CA 92878
(951) 268-6268

City of Irwindale
N/S: Maine Avenue
E/W: Arrow Highway
Weather: Clear

File Name : 13_IRW_Ma Ar PM
Site Code : 05117783
Start Date : 11/28/2017
Page No : 1

Groups Printed- 3 Axle Vehicles

	Arrow Highway Westbound				Maine Avenue Northbound				Arrow Highway Eastbound						
Start Time	Left	Thru	RTOR	App. Total	Left	Right	RTOR	App. Total	Thru	Right	RTOR	App. Total	Exclu. Total	Inclu. Total	Int. Total
04:00 PM	0	13	0	13	0	0	0	0	4	2	0	6	0	19	19
04:15 PM	0	7	0	7	0	0	0	0	5	0	0	5	0	12	12
04:30 PM	0	13	0	13	0	0	0	0	4	1	0	5	0	18	18
04:45 PM	1	2	0	3	0	1	0	1	2	0	0	2	0	6	6
Total	1	35	0	36	0	1	0	1	15	3	0	18	0	55	55
05:00 PM	0	8	0	8	2	1	0	3	5	0	0	5	0	16	16
05:15 PM	0	5	0	5	0	0	0	0	1	0	0	1	0	6	6
05:30 PM	0	10	0	10	0	0	0	0	1	0	0	1	0	11	11
05:45 PM	0	2	0	2	1	0	0	1	2	0	0	2	0	5	5
Total	0	25	0	25	3	1	0	4	9	0	0	9	0	38	38
Grand Total	1	60	0	61	3	2	0	5	24	3	0	27	0	93	93
Apprch %	1.6	98.4			60	40			88.9	11.1					
Total %	1.1	64.5		65.6	3.2	2.2		5.4	25.8	3.2		29	0	100	

	Arrow Highway Westbound			Maine Avenue Northbound			Arrow Highway Eastbound			
Start Time	Left	Thru	App. Total	Left	Right	App. Total	Thru	Right	App. Total	Int. Total
Peak Hour Analysis From 04:30 PM to 05:15 PM - Peak 1 of 1										
Peak Hour for Entire Intersection Begins at 04:30 PM										
04:30 PM	0	**13**	**13**	0	0	0	4	**1**	**5**	**18**
04:45 PM	**1**	2	3	0	**1**	1	2	0	2	6
05:00 PM	0	8	8	**2**	1	**3**	**5**	0	5	16
05:15 PM	0	5	5	0	0	0	1	0	1	6
Total Volume	1	28	29	2	2	4	12	1	13	46
% App. Total	3.4	96.6		50	50		92.3	7.7		
PHF	.250	.538	.558	.250	.500	.333	.600	.250	.650	.639

Counts Unlimited
PO Box 1178
Corona, CA 92878
(951) 268-6268

City of Irwindale
N/S: Maine Avenue
E/W: Arrow Highway
Weather: Clear

File Name : 13_IRW_Ma Ar PM
Site Code : 05117783
Start Date : 11/28/2017
Page No : 2

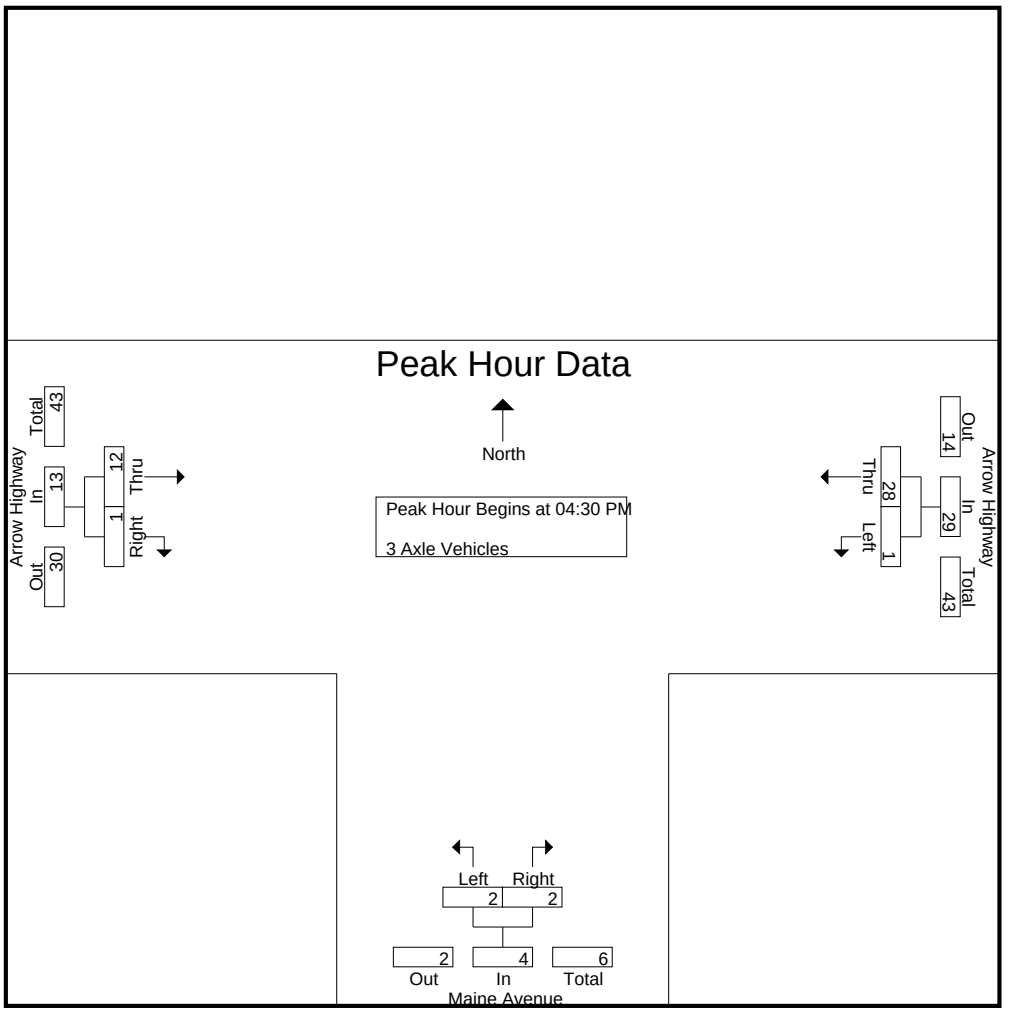

Peak Hour Analysis From 04:30 PM to 05:15 PM - Peak 1 of 1
Peak Hour for Each Approach Begins at:

	04:30 PM			04:30 PM			04:30 PM		
+0 mins.	0	**13**	**13**	0	0	0	4	**1**	**5**
+15 mins.	**1**	2	3	0	**1**	1	2	0	2
+30 mins.	0	8	8	**2**	1	**3**	**5**	0	5
+45 mins.	0	5	5	0	0	0	1	0	1
Total Volume	1	28	29	2	2	4	12	1	13
% App. Total	3.4	96.6		50	50		92.3	7.7	
PHF	.250	.538	.558	.250	.500	.333	.600	.250	.650

Counts Unlimited
PO Box 1178
Corona, CA 92878
(951) 268-6268

City of Irwindale
N/S: Maine Avenue
E/W: Arrow Highway
Weather: Clear

File Name : 13_IRW_Ma Ar PM
Site Code : 05117783
Start Date : 11/28/2017
Page No : 1

Groups Printed- 4+ Axle Trucks

	Arrow Highway Westbound				Maine Avenue Northbound				Arrow Highway Eastbound						
Start Time	Left	Thru	RTOR	App. Total	Left	Right	RTOR	App. Total	Thru	Right	RTOR	App. Total	Exclu. Total	Inclu. Total	Int. Total
04:00 PM	0	11	0	11	0	0	0	0	13	0	0	13	0	24	24
04:15 PM	0	7	0	7	0	0	0	0	3	2	1	5	1	12	13
04:30 PM	0	10	0	10	1	0	0	1	6	0	0	6	0	17	17
04:45 PM	0	4	0	4	0	0	0	0	5	1	0	6	0	10	10
Total	0	32	0	32	1	0	0	1	27	3	1	30	1	63	64
05:00 PM	0	4	0	4	0	1	0	1	5	0	0	5	0	10	10
05:15 PM	0	4	0	4	1	0	0	1	0	0	0	0	0	5	5
05:30 PM	0	2	0	2	0	0	0	0	7	0	0	7	0	9	9
05:45 PM	0	1	0	1	0	0	0	0	2	0	0	2	0	3	3
Total	0	11	0	11	1	1	0	2	14	0	0	14	0	27	27
Grand Total	0	43	0	43	2	1	0	3	41	3	1	44	1	90	91
Apprch %	0	100			66.7	33.3			93.2	6.8					
Total %	0	47.8		47.8	2.2	1.1		3.3	45.6	3.3		48.9	1.1	98.9	

	Arrow Highway Westbound			Maine Avenue Northbound			Arrow Highway Eastbound			
Start Time	Left	Thru	App. Total	Left	Right	App. Total	Thru	Right	App. Total	Int. Total
Peak Hour Analysis From 04:30 PM to 05:15 PM - Peak 1 of 1										
Peak Hour for Entire Intersection Begins at 04:30 PM										
04:30 PM	0	**10**	**10**	**1**	0	**1**	**6**	0	**6**	**17**
04:45 PM	0	4	4	0	0	0	5	**1**	6	10
05:00 PM	0	4	4	0	**1**	1	5	0	5	10
05:15 PM	0	4	4	1	0	1	0	0	0	5
Total Volume	0	22	22	2	1	3	16	1	17	42
% App. Total	0	100		66.7	33.3		94.1	5.9		
PHF	.000	.550	.550	.500	.250	.750	.667	.250	.708	.618

Counts Unlimited
PO Box 1178
Corona, CA 92878
(951) 268-6268

City of Irwindale
N/S: Maine Avenue
E/W: Arrow Highway
Weather: Clear

File Name : 13_IRW_Ma Ar PM
Site Code : 05117783
Start Date : 11/28/2017
Page No : 2

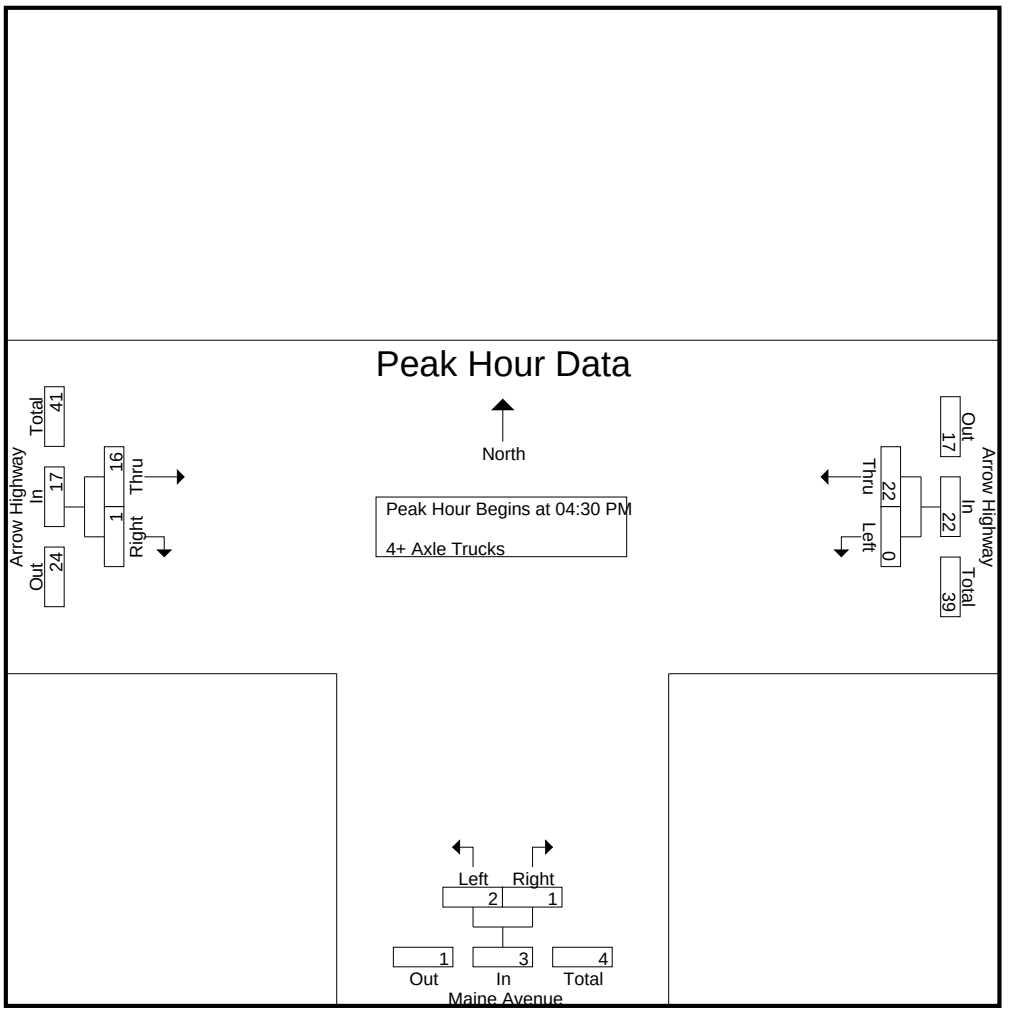

Peak Hour Analysis From 04:30 PM to 05:15 PM - Peak 1 of 1
Peak Hour for Each Approach Begins at:

	04:30 PM			04:30 PM			04:30 PM		
+0 mins.	0	**10**	**10**	**1**	0	**1**	**6**	0	**6**
+15 mins.	0	4	4	0	0	0	5	**1**	6
+30 mins.	0	4	4	0	**1**	1	5	0	5
+45 mins.	0	4	4	1	0	1	0	0	0
Total Volume	0	22	22	2	1	3	16	1	17
% App. Total	0	100		66.7	33.3		94.1	5.9	
PHF	.000	.550	.550	.500	.250	.750	.667	.250	.708

Location: Irwindale
N/S: Maine Avenue
E/W: Arrow Highway

Date: 11/28/2017
Day: Tuesday

PEDESTRIANS

	North Leg Dead End	East Leg Arrow Highway	South Leg Maine Avenue	West Leg Arrow Highway	TOTAL
7:00 AM	0	0	0	0	0
7:15 AM	0	0	0	0	0
7:30 AM	0	1	0	0	1
7:45 AM	0	0	0	0	0
8:00 AM	0	0	2	0	2
8:15 AM	0	0	0	0	0
8:30 AM	0	1	1	0	2
8:45 AM	0	0	0	0	0
TOTAL VOLUMES:	0	2	3	0	5

	North Leg Dead End	East Leg Arrow Highway	South Leg Maine Avenue	West Leg Arrow Highway	TOTAL
4:00 PM	0	0	0	0	0
4:15 PM	0	1	1	0	2
4:30 PM	0	0	0	0	0
4:45 PM	0	3	1	0	4
5:00 PM	0	0	1	0	1
5:15 PM	0	0	4	0	4
5:30 PM	0	0	0	0	0
5:45 PM	0	1	1	0	2
TOTAL VOLUMES:	0	5	8	0	13

Counts Unlimited
P.O. Box 1178
Corona, CA 92878
(951) 268-6268

Location: Irwindale
N/S: Maine Avenue
E/W: Arrow Highway

Date: 11/28/2017
Day: Tuesday

BICYCLES

	North Leg Dead End	East Leg Arrow Highway	South Leg Maine Avenue	West Leg Arrow Highway	TOTAL
7:00 AM	0	0	1	0	1
7:15 AM	1	0	0	0	1
7:30 AM	0	1	0	0	1
7:45 AM	0	0	0	0	0
8:00 AM	0	0	2	0	2
8:15 AM	0	0	0	0	0
8:30 AM	0	0	1	0	1
8:45 AM	0	0	0	0	0
TOTAL VOLUMES:	1	1	4	0	6

	North Leg Dead End	East Leg Arrow Highway	South Leg Maine Avenue	West Leg Arrow Highway	TOTAL
4:00 PM	0	0	0	0	0
4:15 PM	0	0	0	0	0
4:30 PM	0	0	0	0	0
4:45 PM	0	0	0	0	0
5:00 PM	0	0	0	0	0
5:15 PM	0	0	0	0	0
5:30 PM	0	0	0	0	0
5:45 PM	0	0	0	0	0
TOTAL VOLUMES:	0	0	0	0	0

Counts Unlimited
P.O. Box 1178
Corona, CA 92878
(951) 268-6268

Counts Unlimited
PO Box 1178
Corona, CA 92878
(951) 268-6268

City of Irwindale
N/S: Santa Fe Dam Acces/Azusa Canyon Rd
E/W: Arrow Highway
Weather: Clear

File Name : 13_IRW_Azusa Canyon_Arrow Hwy AM
Site Code : 05117366
Start Date : 5/31/2017
Page No : 1

Groups Printed- Passenger Vehicles - Large 2 Axle Vehicles - 3 Axle Vehicles - 4+ Axle Trucks

	Santa Fe Dam Access Road Southbound					Arrow Highway Westbound					Azusa Canyon Road Northbound					Arrow Highway Eastbound							
Start Time	Left	Thru	Right	RTOR	App. Total	Left	Thru	Right	RTOR	App. Total	Left	Thru	Right	RTOR	App. Total	Left	Thru	Right	RTOR	App. Total	Exclu. Total	Inclu. Total	Int. Total
07:00 AM	3	0	4	2	7	18	472	6	0	496	225	1	29	20	255	2	122	24	7	148	29	906	935
07:15 AM	6	1	1	1	8	17	390	6	1	413	247	3	26	17	276	5	128	30	1	163	20	860	880
07:30 AM	0	0	3	2	3	16	460	6	1	482	195	6	40	24	241	3	156	34	14	193	41	919	960
07:45 AM	2	2	4	2	8	16	386	5	1	407	170	4	50	33	224	9	218	34	5	261	41	900	941
Total	11	3	12	7	26	67	1708	23	3	1798	837	14	145	94	996	19	624	122	27	765	131	3585	3716
08:00 AM	3	3	3	3	9	19	352	5	1	376	117	0	44	23	161	8	220	31	0	259	27	805	832
08:15 AM	3	2	3	1	8	22	309	3	0	334	126	2	39	22	167	4	196	31	10	231	33	740	773
08:30 AM	5	0	6	1	11	18	320	8	2	346	73	2	25	21	100	0	164	30	6	194	30	651	681
08:45 AM	2	1	4	3	7	24	265	2	1	291	93	3	42	23	138	6	160	45	8	211	35	647	682
Total	13	6	16	8	35	83	1246	18	4	1347	409	7	150	89	566	18	740	137	24	895	125	2843	2968
Grand Total	24	9	28	15	61	150	2954	41	7	3145	1246	21	295	183	1562	37	1364	259	51	1660	256	6428	6684
Apprch %	39.3	14.8	45.9			4.8	93.9	1.3			79.8	1.3	18.9			2.2	82.2	15.6					
Total %	0.4	0.1	0.4		0.9	2.3	46	0.6		48.9	19.4	0.3	4.6		24.3	0.6	21.2	4		25.8	3.8	96.2	
Passenger Vehicles	19	9	20		59	135	2710	38		2889	1140	19	267		1595	33	1230	165		1466	0	0	6009
% Passenger Vehicles	79.2	100	71.4	73.3	77.6	90	91.7	92.7	85.7	91.7	91.5	90.5	90.5	92.3	91.4	89.2	90.2	63.7	74.5	85.7	0	0	89.9
Large 2 Axle Vehicles	5	0	8		17	9	167	2		178	20	2	21		55	4	83	7		95	0	0	345
% Large 2 Axle Vehicles	20.8	0	28.6	26.7	22.4	6	5.7	4.9	0	5.6	1.6	9.5	7.1	6.6	3.2	10.8	6.1	2.7	2	5.6	0	0	5.2
3 Axle Vehicles	0	0	0		0	2	24	0		26	48	0	5		55	0	19	44		73	0	0	154
% 3 Axle Vehicles	0	0	0	0	0	1.3	0.8	0	0	0.8	3.9	0	1.7	1.1	3.2	0	1.4	17	19.6	4.3	0	0	2.3
4+ Axle Trucks	0	0	0		0	4	53	1		59	38	0	2		40	0	32	43		77	0	0	176
% 4+ Axle Trucks	0	0	0	0	0	2.7	1.8	2.4	14.3	1.9	3	0	0.7	0	2.3	0	2.3	16.6	3.9	4.5	0	0	2.6

	Santa Fe Dam Access Road Southbound				Arrow Highway Westbound				Azusa Canyon Road Northbound				Arrow Highway Eastbound				
Start Time	Left	Thru	Right	App. Total	Left	Thru	Right	App. Total	Left	Thru	Right	App. Total	Left	Thru	Right	App. Total	Int. Total
Peak Hour Analysis From 07:00 AM to 08:45 AM - Peak 1 of 1																	
Peak Hour for Entire Intersection Begins at 07:00 AM																	
07:00 AM	3	0	**4**	7	**18**	**472**	**6**	**496**	225	1	29	255	2	122	24	148	906
07:15 AM	**6**	1	1	**8**	17	390	6	413	**247**	3	26	**276**	5	128	30	163	860
07:30 AM	0	0	3	3	16	460	6	482	195	**6**	40	241	3	156	**34**	193	**919**
07:45 AM	2	**2**	4	8	16	386	5	407	170	4	**50**	224	**9**	**218**	34	**261**	900
Total Volume	11	3	12	26	67	1708	23	1798	837	14	145	996	19	624	122	765	3585
% App. Total	42.3	11.5	46.2		3.7	95	1.3		84	1.4	14.6		2.5	81.6	15.9		
PHF	.458	.375	.750	.813	.931	.905	.958	.906	.847	.583	.725	.902	.528	.716	.897	.733	.975

Counts Unlimited
PO Box 1178
Corona, CA 92878
(951) 268-6268

City of Irwindale
N/S: Santa Fe Dam Acces/Azusa Canyon Rd
E/W: Arrow Highway
Weather: Clear

File Name : 13_IRW_Azusa Canyon_Arrow Hwy AM
Site Code : 05117366
Start Date : 5/31/2017
Page No : 2

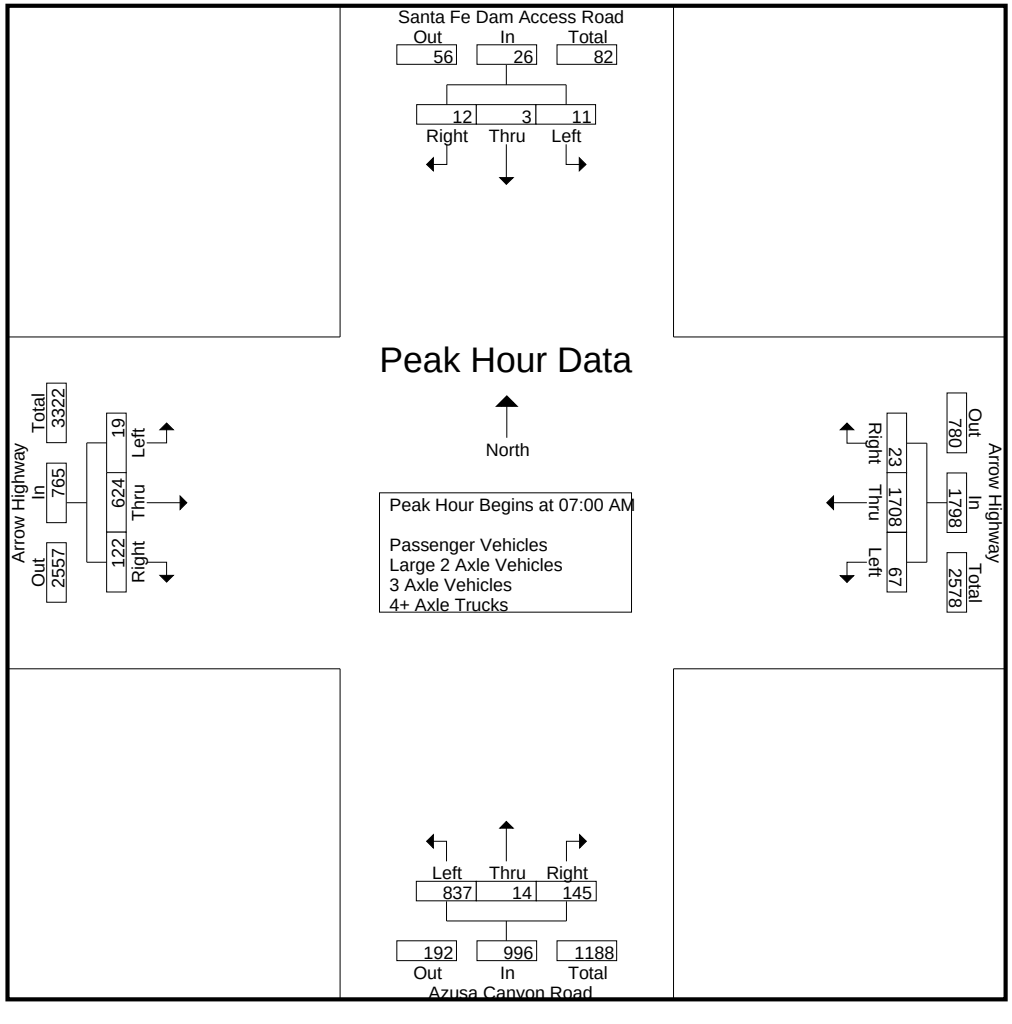

Counts Unlimited
PO Box 1178
Corona, CA 92878
(951) 268-6268

City of Irwindale
N/S: Santa Fe Dam Acces/Azusa Canyon Rd
E/W: Arrow Highway
Weather: Clear

File Name : 13_IRW_Azusa Canyon_Arrow Hwy AM
Site Code : 05117366
Start Date : 5/31/2017
Page No : 3

	Santa Fe Dam Access Road Southbound				Arrow Highway Westbound				Azusa Canyon Road Northbound				Arrow Highway Eastbound				
Start Time	Left	Thru	Right	App. Total	Left	Thru	Right	App. Total	Left	Thru	Right	App. Total	Left	Thru	Right	App. Total	Int. Total
Peak Hour Analysis From 07:00 AM to 08:45 AM - Peak 1 of 1																	
Peak Hour for Each Approach Begins at:																	
	07:45 AM				07:00 AM				07:00 AM				07:45 AM				
+0 mins.	2	2	4	8	**18**	**472**	**6**	**496**	225	1	29	255	**9**	218	**34**	**261**	
+15 mins.	3	**3**	3	9	17	390	6	413	**247**	3	26	**276**	8	**220**	31	259	
+30 mins.	3	2	3	8	16	460	6	482	195	**6**	40	241	4	196	31	231	
+45 mins.	**5**	0	**6**	**11**	16	386	5	407	170	4	**50**	224	0	164	30	194	
Total Volume	13	7	16	36	67	1708	23	1798	837	14	145	996	21	798	126	945	
% App. Total	36.1	19.4	44.4		3.7	95	1.3		84	1.4	14.6		2.2	84.4	13.3		
PHF	.650	.583	.667	.818	.931	.905	.958	.906	.847	.583	.725	.902	.583	.907	.926	.905	

Counts Unlimited
PO Box 1178
Corona, CA 92878
(951) 268-6268

City of Irwindale
N/S: Santa Fe Dam Acces/Azusa Canyon Rd
E/W: Arrow Highway
Weather: Clear

File Name : 13_IRW_Azusa Canyon_Arrow Hwy AM
Site Code : 05117366
Start Date : 5/31/2017
Page No : 1

Groups Printed- Passenger Vehicles

	Santa Fe Dam Access Road Southbound					Arrow Highway Westbound					Azusa Canyon Road Northbound					Arrow Highway Eastbound							
Start Time	Left	Thru	Right	RTOR	App. Total	Left	Thru	Right	RTOR	App. Total	Left	Thru	Right	RTOR	App. Total	Left	Thru	Right	RTOR	App. Total	Exclu. Total	Inclu. Total	Int. Total
07:00 AM	2	0	4	2	6	18	443	6	0	467	217	1	27	20	245	1	94	23	7	118	29	836	865
07:15 AM	4	1	0	0	5	17	358	6	1	381	230	3	25	16	258	5	112	29	1	146	18	790	808
07:30 AM	0	0	2	1	2	14	436	5	1	455	189	4	39	24	232	3	145	22	10	170	36	859	895
07:45 AM	2	2	4	2	8	15	363	5	1	383	159	4	48	31	211	9	197	23	5	229	39	831	870
Total	8	3	10	5	21	64	1600	22	3	1686	795	12	139	91	946	18	548	97	23	663	122	3316	3438
08:00 AM	3	3	3	3	9	18	324	5	1	347	106	0	39	23	145	6	206	17	0	229	27	730	757
08:15 AM	2	2	2	1	6	20	276	3	0	299	105	2	33	19	140	4	176	13	5	193	25	638	663
08:30 AM	5	0	2	0	7	15	282	6	1	303	56	2	22	18	80	0	151	16	6	167	25	557	582
08:45 AM	1	1	3	2	5	18	228	2	1	248	78	3	34	18	115	5	149	22	4	176	25	544	569
Total	11	6	10	6	27	71	1110	16	3	1197	345	7	128	78	480	15	682	68	15	765	102	2469	2571
Grand Total	19	9	20	11	48	135	2710	38	6	2883	1140	19	267	169	1426	33	1230	165	38	1428	224	5785	6009
Apprch %	39.6	18.8	41.7			4.7	94	1.3			79.9	1.3	18.7			2.3	86.1	11.6					
Total %	0.3	0.2	0.3		0.8	2.3	46.8	0.7		49.8	19.7	0.3	4.6		24.6	0.6	21.3	2.9		24.7	3.7	96.3	

	Santa Fe Dam Access Road Southbound				Arrow Highway Westbound				Azusa Canyon Road Northbound				Arrow Highway Eastbound				
Start Time	Left	Thru	Right	App. Total	Left	Thru	Right	App. Total	Left	Thru	Right	App. Total	Left	Thru	Right	App. Total	Int. Total
Peak Hour Analysis From 07:00 AM to 07:45 AM - Peak 1 of 1																	
Peak Hour for Entire Intersection Begins at 07:00 AM																	
07:00 AM	2	0	**4**	6	**18**	**443**	**6**	**467**	217	1	27	245	1	94	23	118	836
07:15 AM	**4**	1	0	5	17	358	6	381	**230**	3	25	**258**	5	112	**29**	146	790
07:30 AM	0	0	2	2	14	436	5	455	189	**4**	39	232	3	145	22	170	**859**
07:45 AM	2	**2**	4	**8**	15	363	5	383	159	4	**48**	211	**9**	**197**	23	**229**	831
Total Volume	8	3	10	21	64	1600	22	1686	795	12	139	946	18	548	97	663	3316
% App. Total	38.1	14.3	47.6		3.8	94.9	1.3		84	1.3	14.7		2.7	82.7	14.6		
PHF	.500	.375	.625	.656	.889	.903	.917	.903	.864	.750	.724	.917	.500	.695	.836	.724	.965

Counts Unlimited
PO Box 1178
Corona, CA 92878
(951) 268-6268

City of Irwindale
N/S: Santa Fe Dam Acces/Azusa Canyon Rd
E/W: Arrow Highway
Weather: Clear

File Name : 13_IRW_Azusa Canyon_Arrow Hwy AM
Site Code : 05117366
Start Date : 5/31/2017
Page No : 2

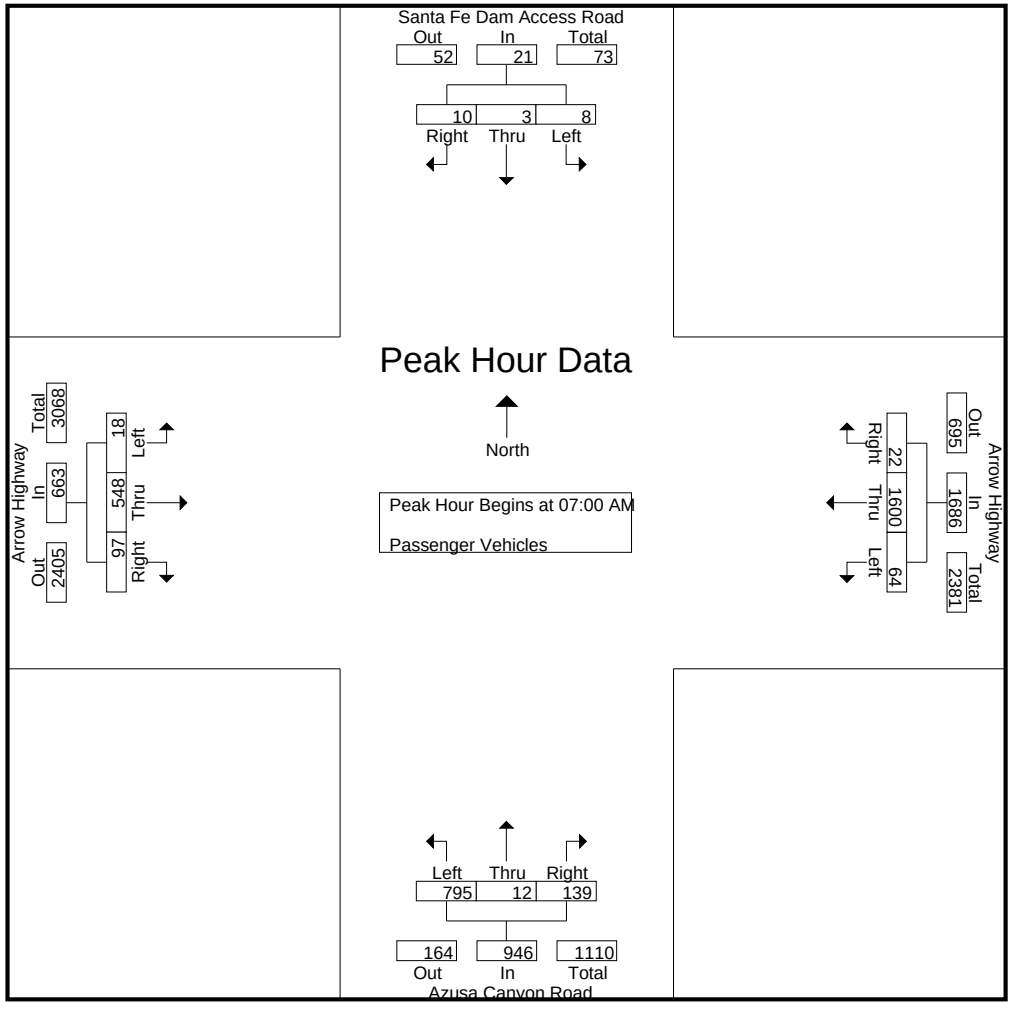

Counts Unlimited
PO Box 1178
Corona, CA 92878
(951) 268-6268

City of Irwindale
N/S: Santa Fe Dam Acces/Azusa Canyon Rd
E/W: Arrow Highway
Weather: Clear

File Name : 13_IRW_Azusa Canyon_Arrow Hwy AM
Site Code : 05117366
Start Date : 5/31/2017
Page No : 3

	Santa Fe Dam Access Road Southbound				Arrow Highway Westbound				Azusa Canyon Road Northbound				Arrow Highway Eastbound				
Start Time	Left	Thru	Right	App. Total	Left	Thru	Right	App. Total	Left	Thru	Right	App. Total	Left	Thru	Right	App. Total	Int. Total
Peak Hour Analysis From 07:00 AM to 07:45 AM - Peak 1 of 1																	
Peak Hour for Each Approach Begins at:																	
	07:00 AM				07:00 AM				07:00 AM				07:00 AM				
+0 mins.	2	0	**4**	6	**18**	**443**	**6**	**467**	217	1	27	245	1	94	23	118	
+15 mins.	**4**	1	0	5	17	358	6	381	**230**	3	25	**258**	5	112	**29**	146	
+30 mins.	0	0	2	2	14	436	5	455	189	**4**	39	232	3	145	22	170	
+45 mins.	2	**2**	4	**8**	15	363	5	383	159	4	**48**	211	**9**	**197**	23	**229**	
Total Volume	8	3	10	21	64	1600	22	1686	795	12	139	946	18	548	97	663	
% App. Total	38.1	14.3	47.6		3.8	94.9	1.3		84	1.3	14.7		2.7	82.7	14.6		
PHF	.500	.375	.625	.656	.889	.903	.917	.903	.864	.750	.724	.917	.500	.695	.836	.724	

Counts Unlimited
PO Box 1178
Corona, CA 92878
(951) 268-6268

City of Irwindale
N/S: Santa Fe Dam Acces/Azusa Canyon Rd
E/W: Arrow Highway
Weather: Clear

File Name : 13_IRW_Azusa Canyon_Arrow Hwy AM
Site Code : 05117366
Start Date : 5/31/2017
Page No : 1

Groups Printed- Large 2 Axle Vehicles

	Santa Fe Dam Access Road Southbound					Arrow Highway Westbound					Azusa Canyon Road Northbound					Arrow Highway Eastbound							
Start Time	Left	Thru	Right	RTOR	App. Total	Left	Thru	Right	RTOR	App. Total	Left	Thru	Right	RTOR	App. Total	Left	Thru	Right	RTOR	App. Total	Exclu. Total	Inclu. Total	Int. Total
07:00 AM	1	0	0	0	1	0	16	0	0	16	4	0	1	0	5	1	18	0	0	19	0	41	41
07:15 AM	2	0	1	1	3	0	25	0	0	25	5	0	1	1	6	0	9	1	0	10	2	44	46
07:30 AM	0	0	1	1	1	1	14	1	0	16	5	2	1	0	8	0	7	1	0	8	1	33	34
07:45 AM	0	0	0	0	0	0	17	0	0	17	0	0	2	2	2	0	16	1	0	17	2	36	38
Total	3	0	2	2	5	1	72	1	0	74	14	2	5	3	21	1	50	3	0	54	5	154	159
08:00 AM	0	0	0	0	0	1	21	0	0	22	0	0	3	0	3	2	5	1	0	8	0	33	33
08:15 AM	1	0	1	0	2	1	24	0	0	25	3	0	4	2	7	0	14	0	0	14	2	48	50
08:30 AM	0	0	4	1	4	1	27	1	0	29	2	0	2	2	4	0	8	1	0	9	3	46	49
08:45 AM	1	0	1	1	2	5	23	0	0	28	1	0	7	5	8	1	6	2	1	9	7	47	54
Total	2	0	6	2	8	8	95	1	0	104	6	0	16	9	22	3	33	4	1	40	12	174	186
Grand Total	5	0	8	4	13	9	167	2	0	178	20	2	21	12	43	4	83	7	1	94	17	328	345
Apprch %	38.5	0	61.5			5.1	93.8	1.1			46.5	4.7	48.8			4.3	88.3	7.4					
Total %	1.5	0	2.4		4	2.7	50.9	0.6		54.3	6.1	0.6	6.4		13.1	1.2	25.3	2.1		28.7	4.9	95.1	

	Santa Fe Dam Access Road Southbound				Arrow Highway Westbound				Azusa Canyon Road Northbound				Arrow Highway Eastbound				
Start Time	Left	Thru	Right	App. Total	Left	Thru	Right	App. Total	Left	Thru	Right	App. Total	Left	Thru	Right	App. Total	Int. Total
Peak Hour Analysis From 07:00 AM to 07:45 AM - Peak 1 of 1																	
Peak Hour for Entire Intersection Begins at 07:00 AM																	
07:00 AM	1	0	0	1	0	16	0	16	4	0	1	5	**1**	**18**	0	**19**	41
07:15 AM	**2**	0	**1**	**3**	0	**25**	0	**25**	**5**	0	1	6	0	9	**1**	10	**44**
07:30 AM	0	0	1	1	**1**	14	**1**	16	5	**2**	1	**8**	0	7	1	8	33
07:45 AM	0	0	0	0	0	17	0	17	0	0	**2**	2	0	16	1	17	36
Total Volume	3	0	2	5	1	72	1	74	14	2	5	21	1	50	3	54	154
% App. Total	60	0	40		1.4	97.3	1.4		66.7	9.5	23.8		1.9	92.6	5.6		
PHF	.375	.000	.500	.417	.250	.720	.250	.740	.700	.250	.625	.656	.250	.694	.750	.711	.875

Counts Unlimited
PO Box 1178
Corona, CA 92878
(951) 268-6268

City of Irwindale
N/S: Santa Fe Dam Acces/Azusa Canyon Rd
E/W: Arrow Highway
Weather: Clear

File Name : 13_IRW_Azusa Canyon_Arrow Hwy AM
Site Code : 05117366
Start Date : 5/31/2017
Page No : 2

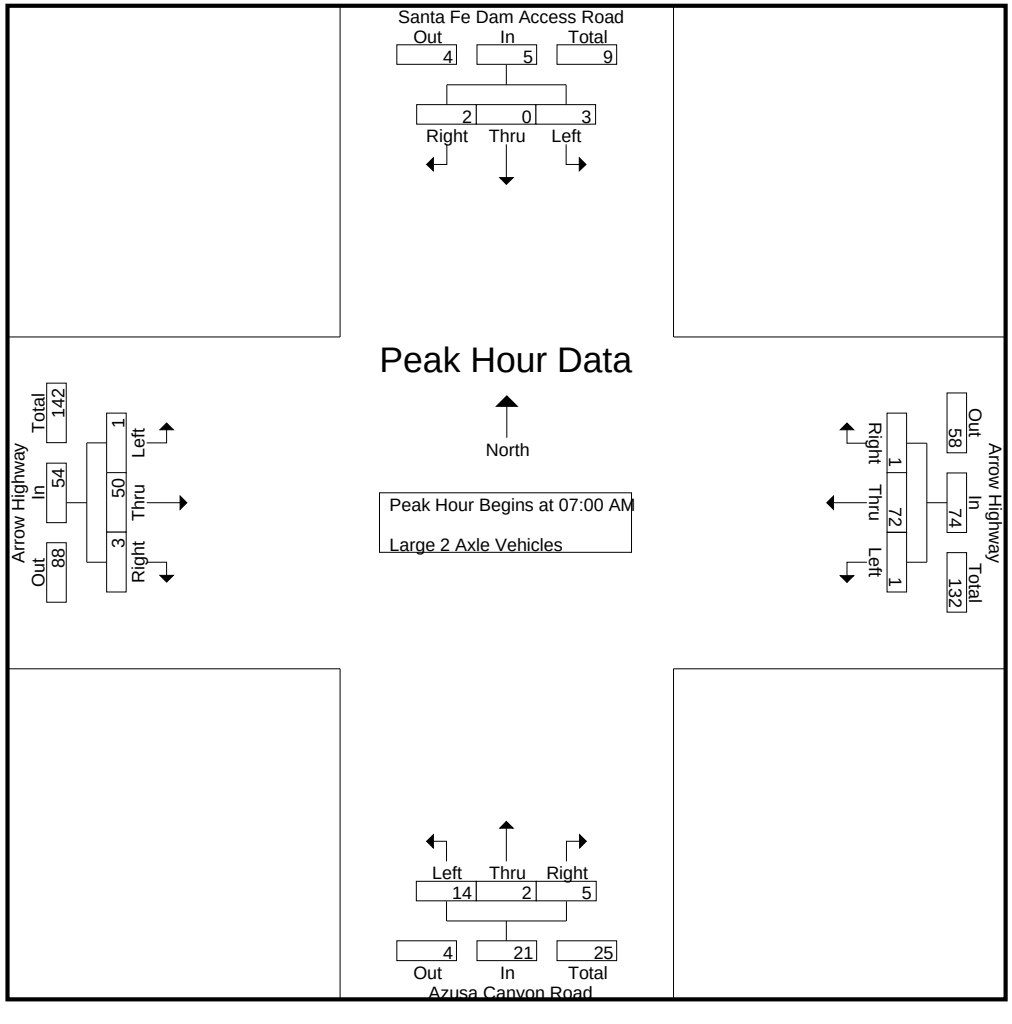

Counts Unlimited
PO Box 1178
Corona, CA 92878
(951) 268-6268

City of Irwindale
N/S: Santa Fe Dam Acces/Azusa Canyon Rd
E/W: Arrow Highway
Weather: Clear

File Name : 13_IRW_Azusa Canyon_Arrow Hwy AM
Site Code : 05117366
Start Date : 5/31/2017
Page No : 3

	Santa Fe Dam Access Road Southbound				Arrow Highway Westbound				Azusa Canyon Road Northbound				Arrow Highway Eastbound				
Start Time	Left	Thru	Right	App. Total	Left	Thru	Right	App. Total	Left	Thru	Right	App. Total	Left	Thru	Right	App. Total	Int. Total
Peak Hour Analysis From 07:00 AM to 07:45 AM - Peak 1 of 1																	
Peak Hour for Each Approach Begins at:																	
	07:00 AM				07:00 AM				07:00 AM				07:00 AM				
+0 mins.	1	0	0	1	0	16	0	16	4	0	1	5	**1**	**18**	0	**19**	
+15 mins.	**2**	0	**1**	**3**	0	**25**	0	**25**	**5**	0	1	6	0	9	**1**	10	
+30 mins.	0	0	1	1	**1**	14	**1**	16	5	**2**	1	**8**	0	7	1	8	
+45 mins.	0	0	0	0	0	17	0	17	0	0	**2**	2	0	16	1	17	
Total Volume	3	0	2	5	1	72	1	74	14	2	5	21	1	50	3	54	
% App. Total	60	0	40		1.4	97.3	1.4		66.7	9.5	23.8		1.9	92.6	5.6		
PHF	.375	.000	.500	.417	.250	.720	.250	.740	.700	.250	.625	.656	.250	.694	.750	.711	

Counts Unlimited
PO Box 1178
Corona, CA 92878
(951) 268-6268

City of Irwindale
N/S: Santa Fe Dam Acces/Azusa Canyon Rd
E/W: Arrow Highway
Weather: Clear

File Name : 13_IRW_Azusa Canyon_Arrow Hwy AM
Site Code : 05117366
Start Date : 5/31/2017
Page No : 1

Groups Printed- 3 Axle Vehicles

	Santa Fe Dam Access Road Southbound					Arrow Highway Westbound					Azusa Canyon Road Northbound					Arrow Highway Eastbound							
Start Time	Left	Thru	Right	RTOR	App. Total	Left	Thru	Right	RTOR	App. Total	Left	Thru	Right	RTOR	App. Total	Left	Thru	Right	RTOR	App. Total	Exclu. Total	Inclu. Total	Int. Total
07:00 AM	0	0	0	0	0	0	7	0	0	7	4	0	1	0	5	0	4	1	0	5	0	17	17
07:15 AM	0	0	0	0	0	0	2	0	0	2	12	0	0	0	12	0	3	0	0	3	0	17	17
07:30 AM	0	0	0	0	0	1	4	0	0	5	0	0	0	0	0	0	1	10	4	11	4	16	20
07:45 AM	0	0	0	0	0	0	0	0	0	0	11	0	0	0	11	0	3	5	0	8	0	19	19
Total	0	0	0	0	0	1	13	0	0	14	27	0	1	0	28	0	11	16	4	27	4	69	73
08:00 AM	0	0	0	0	0	0	0	0	0	0	4	0	1	0	5	0	2	7	0	9	0	14	14
08:15 AM	0	0	0	0	0	0	3	0	0	3	9	0	1	1	10	0	3	8	3	11	4	24	28
08:30 AM	0	0	0	0	0	1	3	0	0	4	6	0	1	1	7	0	2	2	0	4	1	15	16
08:45 AM	0	0	0	0	0	0	5	0	0	5	2	0	1	0	3	0	1	11	3	12	3	20	23
Total	0	0	0	0	0	1	11	0	0	12	21	0	4	2	25	0	8	28	6	36	8	73	81
Grand Total	0	0	0	0	0	2	24	0	0	26	48	0	5	2	53	0	19	44	10	63	12	142	154
Apprch %	0	0	0			7.7	92.3	0			90.6	0	9.4			0	30.2	69.8					
Total %	0	0	0		0	1.4	16.9	0		18.3	33.8	0	3.5		37.3	0	13.4	31		44.4	7.8	92.2	

	Santa Fe Dam Access Road Southbound				Arrow Highway Westbound				Azusa Canyon Road Northbound				Arrow Highway Eastbound				
Start Time	Left	Thru	Right	App. Total	Left	Thru	Right	App. Total	Left	Thru	Right	App. Total	Left	Thru	Right	App. Total	Int. Total
Peak Hour Analysis From 07:00 AM to 07:45 AM - Peak 1 of 1																	
Peak Hour for Entire Intersection Begins at 07:00 AM																	
07:00 AM	0	0	0	0	0	**7**	0	**7**	4	0	**1**	5	0	**4**	1	5	17
07:15 AM	0	0	0	0	0	2	0	2	**12**	0	0	**12**	0	3	0	3	17
07:30 AM	0	0	0	0	**1**	4	0	5	0	0	0	0	0	1	**10**	**11**	16
07:45 AM	0	0	0	0	0	0	0	0	11	0	0	11	0	3	5	8	**19**
Total Volume	0	0	0	0	1	13	0	14	27	0	1	28	0	11	16	27	69
% App. Total	0	0	0		7.1	92.9	0		96.4	0	3.6		0	40.7	59.3		
PHF	.000	.000	.000	.000	.250	.464	.000	.500	.563	.000	.250	.583	.000	.688	.400	.614	.908

Counts Unlimited
PO Box 1178
Corona, CA 92878
(951) 268-6268

City of Irwindale
N/S: Santa Fe Dam Acces/Azusa Canyon Rd
E/W: Arrow Highway
Weather: Clear

File Name : 13_IRW_Azusa Canyon_Arrow Hwy AM
Site Code : 05117366
Start Date : 5/31/2017
Page No : 2

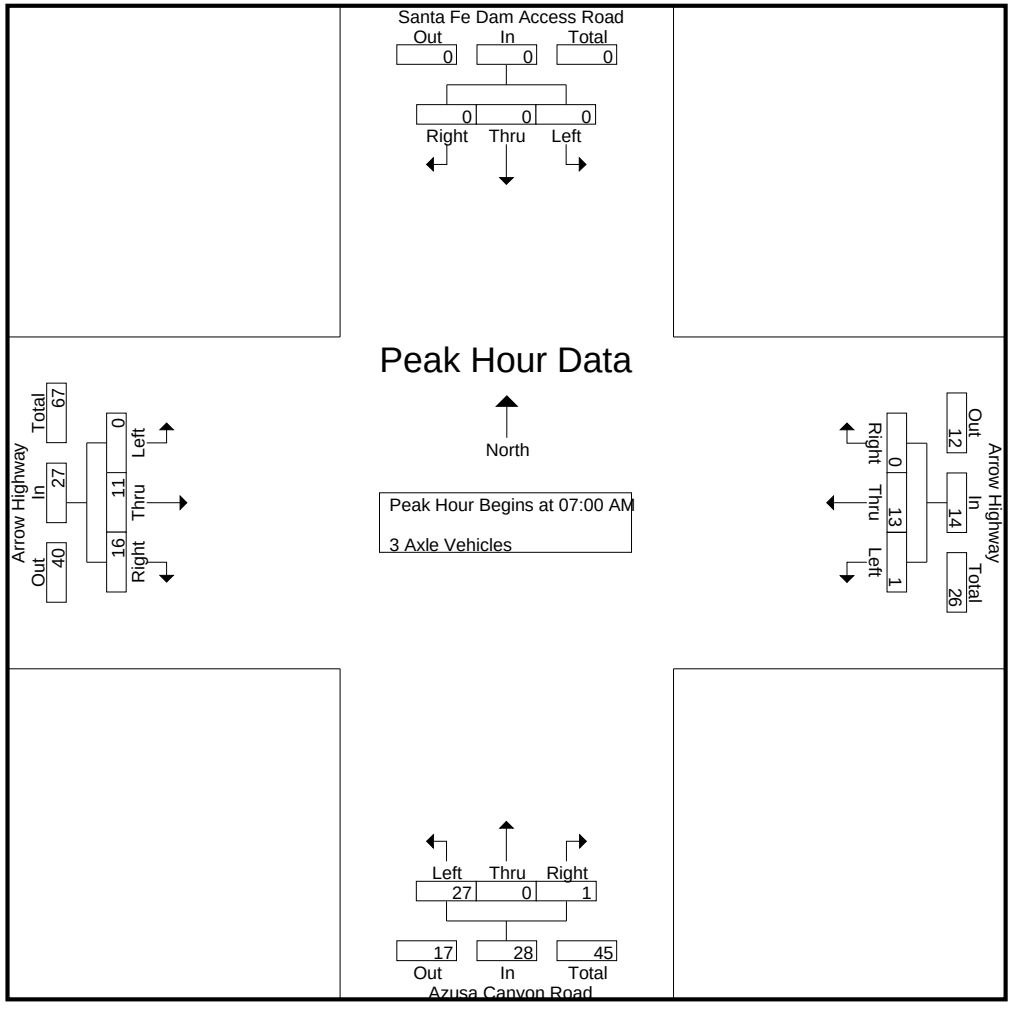

Counts Unlimited
PO Box 1178
Corona, CA 92878
(951) 268-6268

City of Irwindale
N/S: Santa Fe Dam Acces/Azusa Canyon Rd
E/W: Arrow Highway
Weather: Clear

File Name : 13_IRW_Azusa Canyon_Arrow Hwy AM
Site Code : 05117366
Start Date : 5/31/2017
Page No : 3

	Santa Fe Dam Access Road Southbound				Arrow Highway Westbound				Azusa Canyon Road Northbound				Arrow Highway Eastbound				
Start Time	Left	Thru	Right	App. Total	Left	Thru	Right	App. Total	Left	Thru	Right	App. Total	Left	Thru	Right	App. Total	Int. Total
Peak Hour Analysis From 07:00 AM to 07:45 AM - Peak 1 of 1																	
Peak Hour for Each Approach Begins at:																	
	07:00 AM				07:00 AM				07:00 AM				07:00 AM				
+0 mins.	0	0	0	0	0	**7**	0	**7**	4	0	**1**	5	0	**4**	1	5	
+15 mins.	0	0	0	0	0	2	0	2	**12**	0	0	**12**	0	3	0	3	
+30 mins.	0	0	0	0	**1**	4	0	5	0	0	0	0	0	1	**10**	**11**	
+45 mins.	0	0	0	0	0	0	0	0	11	0	0	11	0	3	5	8	
Total Volume	0	0	0	0	1	13	0	14	27	0	1	28	0	11	16	27	
% App. Total	0	0	0		7.1	92.9	0		96.4	0	3.6		0	40.7	59.3		
PHF	.000	.000	.000	.000	.250	.464	.000	.500	.563	.000	.250	.583	.000	.688	.400	.614	

Counts Unlimited
PO Box 1178
Corona, CA 92878
(951) 268-6268

City of Irwindale
N/S: Santa Fe Dam Acces/Azusa Canyon Rd
E/W: Arrow Highway
Weather: Clear

File Name : 13_IRW_Azusa Canyon_Arrow Hwy AM
Site Code : 05117366
Start Date : 5/31/2017
Page No : 1

Groups Printed- 4+ Axle Trucks

	Santa Fe Dam Access Road Southbound					Arrow Highway Westbound					Azusa Canyon Road Northbound					Arrow Highway Eastbound							
Start Time	Left	Thru	Right	RTOR	App. Total	Left	Thru	Right	RTOR	App. Total	Left	Thru	Right	RTOR	App. Total	Left	Thru	Right	RTOR	App. Total	Exclu. Total	Inclu. Total	Int. Total
07:00 AM	0	0	0	0	0	0	6	0	0	6	0	0	0	0	0	0	6	0	0	6	0	12	12
07:15 AM	0	0	0	0	0	0	5	0	0	5	0	0	0	0	0	0	4	0	0	4	0	9	9
07:30 AM	0	0	0	0	0	0	6	0	0	6	1	0	0	0	1	0	3	1	0	4	0	11	11
07:45 AM	0	0	0	0	0	1	6	0	0	7	0	0	0	0	0	0	2	5	0	7	0	14	14
Total	0	0	0	0	0	1	23	0	0	24	1	0	0	0	1	0	15	6	0	21	0	46	46
08:00 AM	0	0	0	0	0	0	7	0	0	7	7	0	1	0	8	0	7	6	0	13	0	28	28
08:15 AM	0	0	0	0	0	1	6	0	0	7	9	0	1	0	10	0	3	10	2	13	2	30	32
08:30 AM	0	0	0	0	0	1	8	1	1	10	9	0	0	0	9	0	3	11	0	14	1	33	34
08:45 AM	0	0	0	0	0	1	9	0	0	10	12	0	0	0	12	0	4	10	0	14	0	36	36
Total	0	0	0	0	0	3	30	1	1	34	37	0	2	0	39	0	17	37	2	54	3	127	130
Grand Total	0	0	0	0	0	4	53	1	1	58	38	0	2	0	40	0	32	43	2	75	3	173	176
Apprch %	0	0	0			6.9	91.4	1.7			95	0	5			0	42.7	57.3					
Total %	0	0	0		0	2.3	30.6	0.6		33.5	22	0	1.2		23.1	0	18.5	24.9		43.4	1.7	98.3	

	Santa Fe Dam Access Road Southbound				Arrow Highway Westbound				Azusa Canyon Road Northbound				Arrow Highway Eastbound				
Start Time	Left	Thru	Right	App. Total	Left	Thru	Right	App. Total	Left	Thru	Right	App. Total	Left	Thru	Right	App. Total	Int. Total
Peak Hour Analysis From 07:00 AM to 07:45 AM - Peak 1 of 1																	
Peak Hour for Entire Intersection Begins at 07:00 AM																	
07:00 AM	0	0	0	0	0	**6**	0	6	0	0	0	0	0	**6**	0	6	12
07:15 AM	0	0	0	0	0	5	0	5	0	0	0	0	0	4	0	4	9
07:30 AM	0	0	0	0	0	6	0	6	**1**	0	0	**1**	0	3	1	4	11
07:45 AM	0	0	0	0	**1**	6	0	**7**	0	0	0	0	0	2	**5**	**7**	**14**
Total Volume	0	0	0	0	1	23	0	24	1	0	0	1	0	15	6	21	46
% App. Total	0	0	0		4.2	95.8	0		100	0	0		0	71.4	28.6		
PHF	.000	.000	.000	.000	.250	.958	.000	.857	.250	.000	.000	.250	.000	.625	.300	.750	.821

Counts Unlimited
PO Box 1178
Corona, CA 92878
(951) 268-6268

City of Irwindale
N/S: Santa Fe Dam Acces/Azusa Canyon Rd
E/W: Arrow Highway
Weather: Clear

File Name : 13_IRW_Azusa Canyon_Arrow Hwy AM
Site Code : 05117366
Start Date : 5/31/2017
Page No : 2

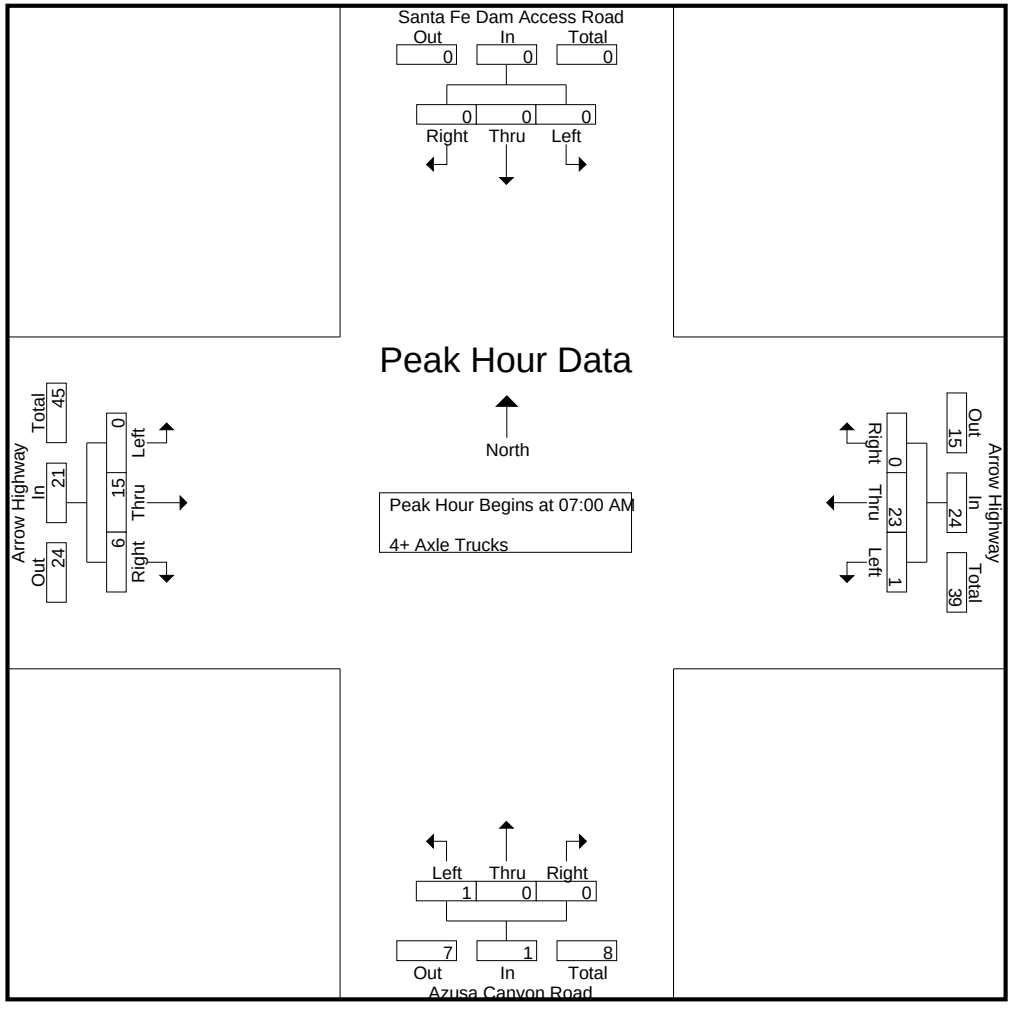

Counts Unlimited
PO Box 1178
Corona, CA 92878
(951) 268-6268

City of Irwindale
N/S: Santa Fe Dam Acces/Azusa Canyon Rd
E/W: Arrow Highway
Weather: Clear

File Name : 13_IRW_Azusa Canyon_Arrow Hwy AM
Site Code : 05117366
Start Date : 5/31/2017
Page No : 3

	Santa Fe Dam Access Road Southbound				Arrow Highway Westbound				Azusa Canyon Road Northbound				Arrow Highway Eastbound				
Start Time	Left	Thru	Right	App. Total	Left	Thru	Right	App. Total	Left	Thru	Right	App. Total	Left	Thru	Right	App. Total	Int. Total
Peak Hour Analysis From 07:00 AM to 07:45 AM - Peak 1 of 1																	
Peak Hour for Each Approach Begins at:																	
	07:00 AM				07:00 AM				07:00 AM				07:00 AM				
+0 mins.	0	0	0	0	0	**6**	0	6	0	0	0	0	0	**6**	0	6	
+15 mins.	0	0	0	0	0	5	0	5	0	0	0	0	0	4	0	4	
+30 mins.	0	0	0	0	0	6	0	6	**1**	0	0	**1**	0	3	1	4	
+45 mins.	0	0	0	0	**1**	6	0	**7**	0	0	0	0	0	2	**5**	**7**	
Total Volume	0	0	0	0	1	23	0	24	1	0	0	1	0	15	6	21	
% App. Total	0	0	0		4.2	95.8	0		100	0	0		0	71.4	28.6		
PHF	.000	.000	.000	.000	.250	.958	.000	.857	.250	.000	.000	.250	.000	.625	.300	.750	

Counts Unlimited
PO Box 1178
Corona, CA 92878
(951) 268-6268

City of Irwindale
N/S: Santa Fe Dam Acces/Azusa Canyon Rd
E/W: Arrow Highway
Weather: Clear

File Name : 13_IRW_Azusa Canyon_Arrow Hwy PM
Site Code : 05117366
Start Date : 5/31/2017
Page No : 1

Groups Printed- Passenger Vehicles - Large 2 Axle Vehicles - 3 Axle Vehicles - 4+ Axle Trucks

	Santa Fe Dam Access Road Southbound					Arrow Highway Westbound					Azusa Canyon Road Northbound					Arrow Highway Eastbound							
Start Time	Left	Thru	Right	RTOR	App. Total	Left	Thru	Right	RTOR	App. Total	Left	Thru	Right	RTOR	App. Total	Left	Thru	Right	RTOR	App. Total	Exclu. Total	Inclu. Total	Int. Total
04:00 PM	9	3	4	3	16	25	220	7	1	252	43	1	123	46	167	4	298	19	4	321	54	756	810
04:15 PM	5	3	16	10	24	38	191	3	1	232	41	1	154	48	196	4	249	5	3	258	62	710	772
04:30 PM	4	2	4	1	10	33	250	2	0	285	36	0	112	28	148	3	324	13	5	340	34	783	817
04:45 PM	4	2	10	5	16	47	221	3	0	271	28	4	131	43	163	3	293	13	4	309	52	759	811
Total	22	10	34	19	66	143	882	15	2	1040	148	6	520	165	674	14	1164	50	16	1228	202	3008	3210
05:00 PM	6	4	8	1	18	36	252	2	0	290	30	1	88	44	119	5	336	20	4	361	49	788	837
05:15 PM	1	5	7	3	13	42	244	9	2	295	26	0	111	38	137	3	312	13	6	328	49	773	822
05:30 PM	5	21	6	1	32	37	202	8	0	247	27	2	89	52	118	4	333	14	3	351	56	748	804
05:45 PM	4	1	7	2	12	31	202	5	1	238	20	6	110	38	136	6	341	21	9	368	50	754	804
Total	16	31	28	7	75	146	900	24	3	1070	103	9	398	172	510	18	1322	68	22	1408	204	3063	3267
Grand Total	38	41	62	26	141	289	1782	39	5	2110	251	15	918	337	1184	32	2486	118	38	2636	406	6071	6477
Apprch %	27	29.1	44			13.7	84.5	1.8			21.2	1.3	77.5			1.2	94.3	4.5					
Total %	0.6	0.7	1		2.3	4.8	29.4	0.6		34.8	4.1	0.2	15.1		19.5	0.5	40.9	1.9		43.4	6.3	93.7	
Passenger Vehicles	37	40	59		160	269	1642	35		1951	240	14	897		1479	29	2340	107		2511	0	0	6101
% Passenger Vehicles	97.4	97.6	95.2	92.3	95.8	93.1	92.1	89.7	100	92.2	95.6	93.3	97.7	97.3	97.2	90.6	94.1	90.7	92.1	93.9	0	0	94.2
Large 2 Axle Vehicles	1	1	2		5	15	54	4		73	8	1	17		34	3	87	7		99	0	0	211
% Large 2 Axle Vehicles	2.6	2.4	3.2	3.8	3	5.2	3	10.3	0	3.5	3.2	6.7	1.9	2.4	2.2	9.4	3.5	5.9	5.3	3.7	0	0	3.3
3 Axle Vehicles	0	0	1		2	1	54	0		55	1	0	2		4	0	25	0		25	0	0	86
% 3 Axle Vehicles	0	0	1.6	3.8	1.2	0.3	3	0	0	2.6	0.4	0	0.2	0.3	0.3	0	1	0	0	0.9	0	0	1.3
4+ Axle Trucks	0	0	0		0	4	32	0		36	2	0	2		4	0	34	4		39	0	0	79
% 4+ Axle Trucks	0	0	0	0	0	1.4	1.8	0	0	1.7	0.8	0	0.2	0	0.3	0	1.4	3.4	2.6	1.5	0	0	1.2

	Santa Fe Dam Access Road Southbound				Arrow Highway Westbound				Azusa Canyon Road Northbound				Arrow Highway Eastbound				
Start Time	Left	Thru	Right	App. Total	Left	Thru	Right	App. Total	Left	Thru	Right	App. Total	Left	Thru	Right	App. Total	Int. Total
Peak Hour Analysis From 04:00 PM to 05:45 PM - Peak 1 of 1																	
Peak Hour for Entire Intersection Begins at 04:30 PM																	
04:30 PM	4	2	4	10	33	250	2	285	**36**	0	112	148	3	324	13	340	783
04:45 PM	4	2	**10**	16	**47**	221	3	271	28	**4**	**131**	**163**	3	293	13	309	759
05:00 PM	**6**	4	8	**18**	36	**252**	2	290	30	1	88	119	**5**	**336**	**20**	**361**	**788**
05:15 PM	1	**5**	7	13	42	244	**9**	**295**	26	0	111	137	3	312	13	328	773
Total Volume	15	13	29	57	158	967	16	1141	120	5	442	567	14	1265	59	1338	3103
% App. Total	26.3	22.8	50.9		13.8	84.8	1.4		21.2	0.9	78		1	94.5	4.4		
PHF	.625	.650	.725	.792	.840	.959	.444	.967	.833	.313	.844	.870	.700	.941	.738	.927	.984

Counts Unlimited
PO Box 1178
Corona, CA 92878
(951) 268-6268

City of Irwindale
N/S: Santa Fe Dam Acces/Azusa Canyon Rd
E/W: Arrow Highway
Weather: Clear

File Name : 13_IRW_Azusa Canyon_Arrow Hwy PM
Site Code : 05117366
Start Date : 5/31/2017
Page No : 2

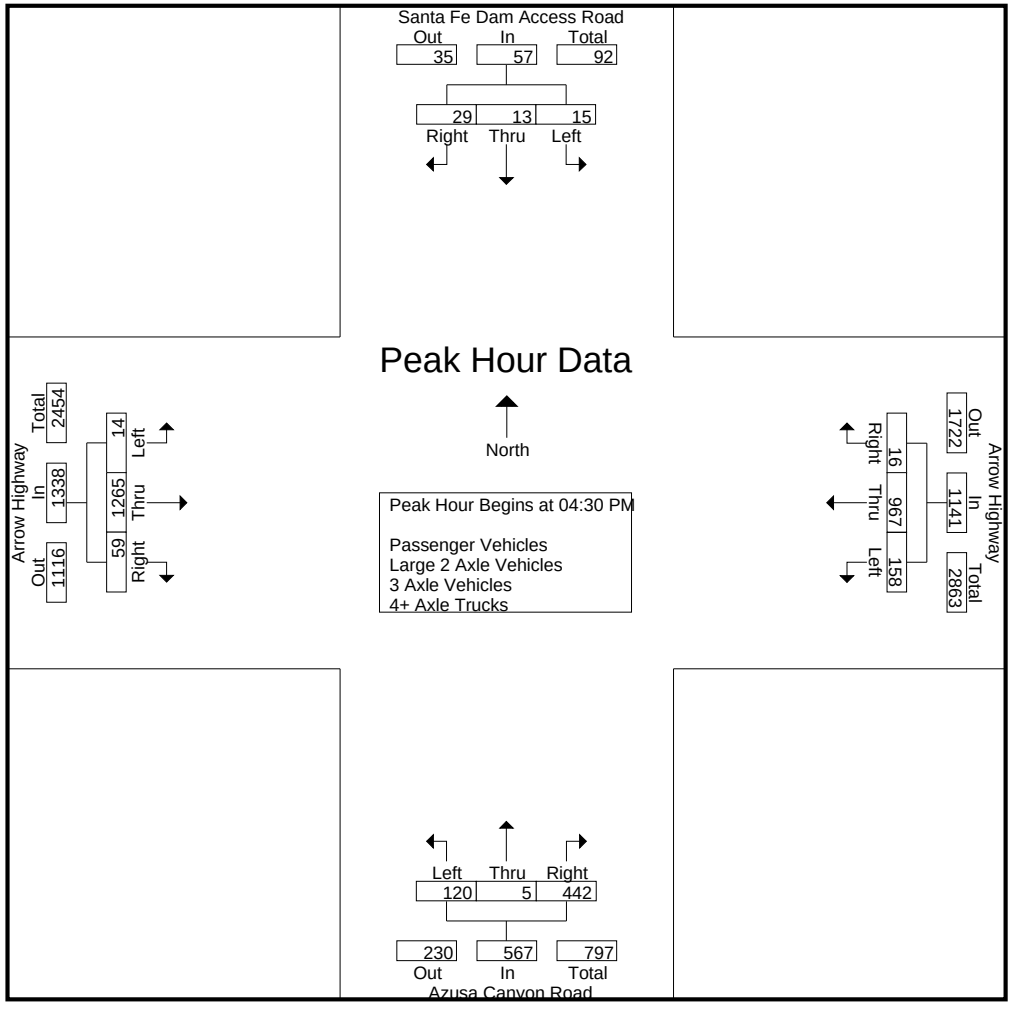

Counts Unlimited
PO Box 1178
Corona, CA 92878
(951) 268-6268

City of Irwindale
N/S: Santa Fe Dam Acces/Azusa Canyon Rd
E/W: Arrow Highway
Weather: Clear

File Name : 13_IRW_Azusa Canyon_Arrow Hwy PM
Site Code : 05117366
Start Date : 5/31/2017
Page No : 3

	Santa Fe Dam Access Road Southbound				Arrow Highway Westbound				Azusa Canyon Road Northbound				Arrow Highway Eastbound				
Start Time	Left	Thru	Right	App. Total	Left	Thru	Right	App. Total	Left	Thru	Right	App. Total	Left	Thru	Right	App. Total	Int. Total
Peak Hour Analysis From 04:00 PM to 05:45 PM - Peak 1 of 1																	
Peak Hour for Each Approach Begins at:																	
	04:45 PM				04:30 PM				04:00 PM				05:00 PM				
+0 mins.	4	2	**10**	16	33	250	2	285	**43**	1	123	167	5	336	20	361	
+15 mins.	**6**	4	8	18	**47**	221	3	271	41	1	**154**	**196**	3	312	13	328	
+30 mins.	1	5	7	13	36	**252**	2	290	36	0	112	148	4	333	14	351	
+45 mins.	5	**21**	6	**32**	42	244	**9**	**295**	28	**4**	131	163	**6**	**341**	**21**	**368**	
Total Volume	16	32	31	79	158	967	16	1141	148	6	520	674	18	1322	68	1408	
% App. Total	20.3	40.5	39.2		13.8	84.8	1.4		22	0.9	77.2		1.3	93.9	4.8		
PHF	.667	.381	.775	.617	.840	.959	.444	.967	.860	.375	.844	.860	.750	.969	.810	.957	

Counts Unlimited
PO Box 1178
Corona, CA 92878
(951) 268-6268

City of Irwindale
N/S: Santa Fe Dam Acces/Azusa Canyon Rd
E/W: Arrow Highway
Weather: Clear

File Name : 13_IRW_Azusa Canyon_Arrow Hwy PM
Site Code : 05117366
Start Date : 5/31/2017
Page No : 1

Groups Printed- Passenger Vehicles

	Santa Fe Dam Access Road Southbound					Arrow Highway Westbound					Azusa Canyon Road Northbound					Arrow Highway Eastbound							
Start Time	Left	Thru	Right	RTOR	App. Total	Left	Thru	Right	RTOR	App. Total	Left	Thru	Right	RTOR	App. Total	Left	Thru	Right	RTOR	App. Total	Exclu. Total	Inclu. Total	Int. Total
04:00 PM	9	3	4	3	16	24	204	7	1	235	39	1	121	45	161	4	261	18	3	283	52	695	747
04:15 PM	5	3	15	9	23	34	171	3	1	208	39	1	150	47	190	4	225	4	3	233	60	654	714
04:30 PM	3	2	4	1	9	29	224	2	0	255	33	0	111	28	144	2	315	13	5	330	34	738	772
04:45 PM	4	2	9	5	15	45	201	2	0	248	26	4	127	42	157	3	277	11	3	291	50	711	761
Total	21	10	32	18	63	132	800	14	2	946	137	6	509	162	652	13	1078	46	14	1137	196	2798	2994
05:00 PM	6	4	8	1	18	36	233	1	0	270	30	1	83	41	114	5	312	18	4	335	46	737	783
05:15 PM	1	5	7	3	13	42	228	7	2	277	26	0	109	37	135	2	303	11	5	316	47	741	788
05:30 PM	5	20	5	0	30	34	191	8	0	233	27	1	87	51	115	3	324	13	3	340	54	718	772
05:45 PM	4	1	7	2	12	25	190	5	1	220	20	6	109	37	135	6	323	19	9	348	49	715	764
Total	16	30	27	6	73	137	842	21	3	1000	103	8	388	166	499	16	1262	61	21	1339	196	2911	3107
Grand Total	37	40	59	24	136	269	1642	35	5	1946	240	14	897	328	1151	29	2340	107	35	2476	392	5709	6101
Apprch %	27.2	29.4	43.4			13.8	84.4	1.8			20.9	1.2	77.9			1.2	94.5	4.3					
Total %	0.6	0.7	1		2.4	4.7	28.8	0.6		34.1	4.2	0.2	15.7		20.2	0.5	41	1.9		43.4	6.4	93.6	

	Santa Fe Dam Access Road Southbound				Arrow Highway Westbound				Azusa Canyon Road Northbound				Arrow Highway Eastbound				
Start Time	Left	Thru	Right	App. Total	Left	Thru	Right	App. Total	Left	Thru	Right	App. Total	Left	Thru	Right	App. Total	Int. Total
Peak Hour Analysis From 04:30 PM to 05:15 PM - Peak 1 of 1																	
Peak Hour for Entire Intersection Begins at 04:30 PM																	
04:30 PM	3	2	4	9	29	224	2	255	**33**	0	111	144	2	**315**	13	330	738
04:45 PM	4	2	**9**	15	**45**	201	2	248	26	**4**	**127**	**157**	3	277	11	291	711
05:00 PM	**6**	4	8	**18**	36	**233**	1	270	30	1	83	114	**5**	312	**18**	**335**	737
05:15 PM	1	**5**	7	13	42	228	**7**	**277**	26	0	109	135	2	303	11	316	**741**
Total Volume	14	13	28	55	152	886	12	1050	115	5	430	550	12	1207	53	1272	2927
% App. Total	25.5	23.6	50.9		14.5	84.4	1.1		20.9	0.9	78.2		0.9	94.9	4.2		
PHF	.583	.650	.778	.764	.844	.951	.429	.948	.871	.313	.846	.876	.600	.958	.736	.949	.988

Counts Unlimited
PO Box 1178
Corona, CA 92878
(951) 268-6268

City of Irwindale
N/S: Santa Fe Dam Acces/Azusa Canyon Rd
E/W: Arrow Highway
Weather: Clear

File Name : 13_IRW_Azusa Canyon_Arrow Hwy PM
Site Code : 05117366
Start Date : 5/31/2017
Page No : 2

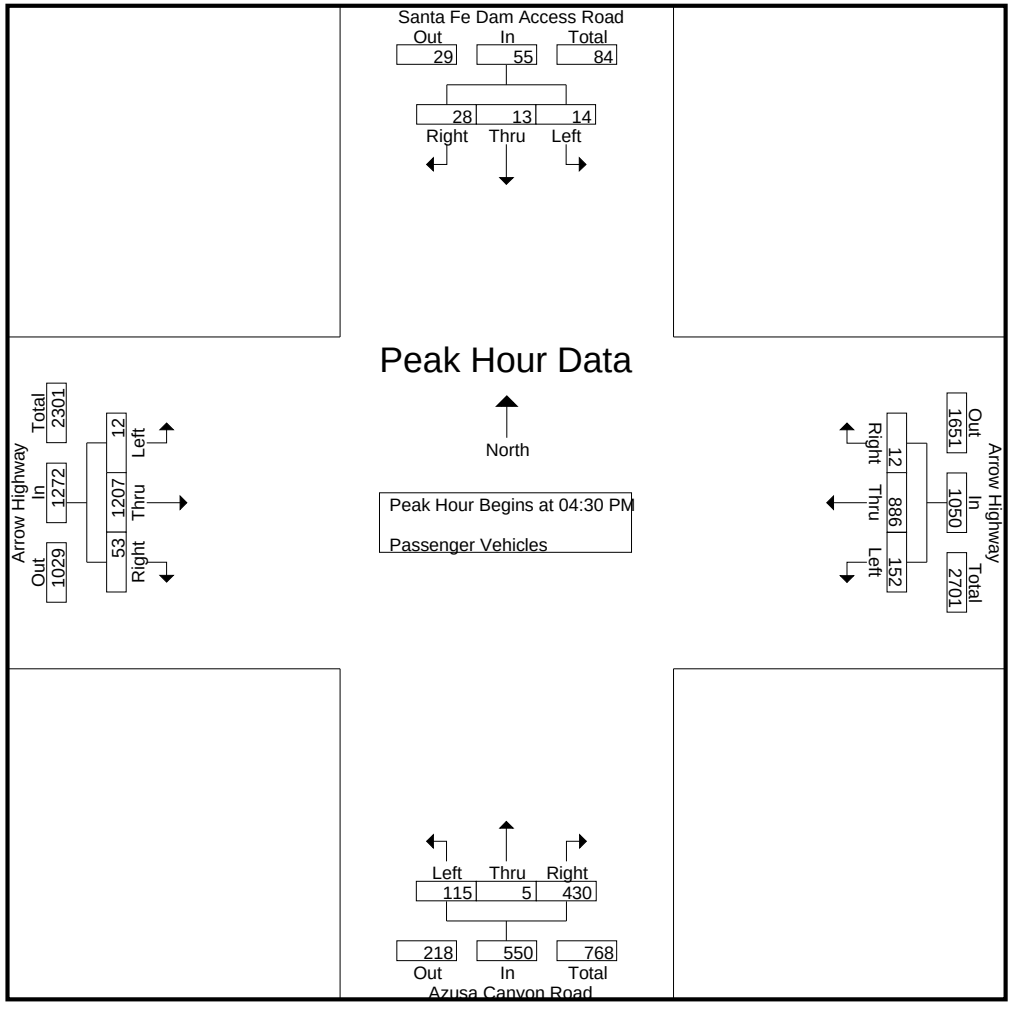

Counts Unlimited
PO Box 1178
Corona, CA 92878
(951) 268-6268

City of Irwindale
N/S: Santa Fe Dam Acces/Azusa Canyon Rd
E/W: Arrow Highway
Weather: Clear

File Name : 13_IRW_Azusa Canyon_Arrow Hwy PM
Site Code : 05117366
Start Date : 5/31/2017
Page No : 3

	Santa Fe Dam Access Road Southbound				Arrow Highway Westbound				Azusa Canyon Road Northbound				Arrow Highway Eastbound				
Start Time	Left	Thru	Right	App. Total	Left	Thru	Right	App. Total	Left	Thru	Right	App. Total	Left	Thru	Right	App. Total	Int. Total
Peak Hour Analysis From 04:30 PM to 05:15 PM - Peak 1 of 1																	
Peak Hour for Each Approach Begins at:																	
	04:30 PM				04:30 PM				04:30 PM				04:30 PM				
+0 mins.	3	2	4	9	29	224	2	255	**33**	0	111	144	2	**315**	13	330	
+15 mins.	4	2	**9**	15	**45**	201	2	248	26	**4**	**127**	**157**	3	277	11	291	
+30 mins.	**6**	4	8	**18**	36	**233**	1	270	30	1	83	114	**5**	312	**18**	**335**	
+45 mins.	1	**5**	7	13	42	228	**7**	**277**	26	0	109	135	2	303	11	316	
Total Volume	14	13	28	55	152	886	12	1050	115	5	430	550	12	1207	53	1272	
% App. Total	25.5	23.6	50.9		14.5	84.4	1.1		20.9	0.9	78.2		0.9	94.9	4.2		
PHF	.583	.650	.778	.764	.844	.951	.429	.948	.871	.313	.846	.876	.600	.958	.736	.949	

Counts Unlimited
PO Box 1178
Corona, CA 92878
(951) 268-6268

City of Irwindale
N/S: Santa Fe Dam Acces/Azusa Canyon Rd
E/W: Arrow Highway
Weather: Clear

File Name : 13_IRW_Azusa Canyon_Arrow Hwy PM
Site Code : 05117366
Start Date : 5/31/2017
Page No : 1

Groups Printed- Large 2 Axle Vehicles

	Santa Fe Dam Access Road Southbound					Arrow Highway Westbound					Azusa Canyon Road Northbound					Arrow Highway Eastbound							
Start Time	Left	Thru	Right	RTOR	App. Total	Left	Thru	Right	RTOR	App. Total	Left	Thru	Right	RTOR	App. Total	Left	Thru	Right	RTOR	App. Total	Exclu. Total	Inclu. Total	Int. Total
04:00 PM	0	0	0	0	0	0	5	0	0	5	2	0	1	1	3	0	22	1	1	23	2	31	33
04:15 PM	0	0	0	0	0	4	6	0	0	10	2	0	4	1	6	0	10	0	0	10	1	26	27
04:30 PM	1	0	0	0	1	3	12	0	0	15	3	0	1	0	4	1	8	0	0	9	0	29	29
04:45 PM	0	0	1	0	1	1	8	1	0	10	1	0	3	1	4	0	7	1	0	8	1	23	24
Total	1	0	1	0	2	8	31	1	0	40	8	0	9	3	17	1	47	2	1	50	4	109	113
05:00 PM	0	0	0	0	0	0	9	1	0	10	0	0	4	2	4	0	17	1	0	18	2	32	34
05:15 PM	0	0	0	0	0	0	8	2	0	10	0	0	1	1	1	1	6	1	1	8	2	19	21
05:30 PM	0	1	1	1	2	2	2	0	0	4	0	1	2	1	3	1	4	1	0	6	2	15	17
05:45 PM	0	0	0	0	0	5	4	0	0	9	0	0	1	1	1	0	13	2	0	15	1	25	26
Total	0	1	1	1	2	7	23	3	0	33	0	1	8	5	9	2	40	5	1	47	7	91	98
Grand Total	1	1	2	1	4	15	54	4	0	73	8	1	17	8	26	3	87	7	2	97	11	200	211
Apprch %	25	25	50			20.5	74	5.5			30.8	3.8	65.4			3.1	89.7	7.2					
Total %	0.5	0.5	1		2	7.5	27	2		36.5	4	0.5	8.5		13	1.5	43.5	3.5		48.5	5.2	94.8	

	Santa Fe Dam Access Road Southbound				Arrow Highway Westbound				Azusa Canyon Road Northbound				Arrow Highway Eastbound				
Start Time	Left	Thru	Right	App. Total	Left	Thru	Right	App. Total	Left	Thru	Right	App. Total	Left	Thru	Right	App. Total	Int. Total
Peak Hour Analysis From 04:30 PM to 05:15 PM - Peak 1 of 1																	
Peak Hour for Entire Intersection Begins at 04:30 PM																	
04:30 PM	**1**	0	0	**1**	**3**	**12**	0	**15**	**3**	0	1	**4**	**1**	8	0	9	29
04:45 PM	0	0	**1**	1	1	8	1	10	1	0	3	4	0	7	**1**	8	23
05:00 PM	0	0	0	0	0	9	1	10	0	0	**4**	4	0	**17**	1	**18**	**32**
05:15 PM	0	0	0	0	0	8	**2**	10	0	0	1	1	1	6	1	8	19
Total Volume	1	0	1	2	4	37	4	45	4	0	9	13	2	38	3	43	103
% App. Total	50	0	50		8.9	82.2	8.9		30.8	0	69.2		4.7	88.4	7		
PHF	.250	.000	.250	.500	.333	.771	.500	.750	.333	.000	.563	.813	.500	.559	.750	.597	.805

Counts Unlimited
PO Box 1178
Corona, CA 92878
(951) 268-6268

City of Irwindale
N/S: Santa Fe Dam Acces/Azusa Canyon Rd
E/W: Arrow Highway
Weather: Clear

File Name : 13_IRW_Azusa Canyon_Arrow Hwy PM
Site Code : 05117366
Start Date : 5/31/2017
Page No : 2

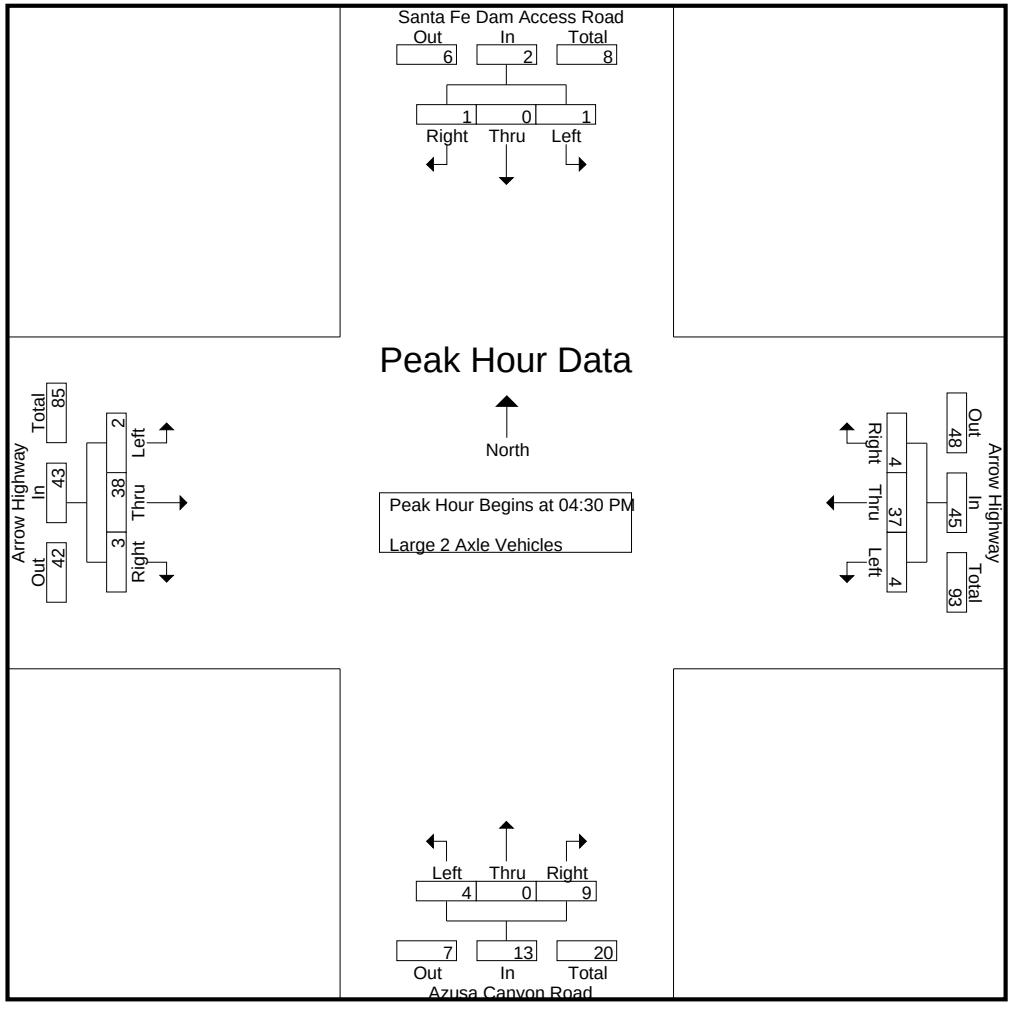

Counts Unlimited
PO Box 1178
Corona, CA 92878
(951) 268-6268

City of Irwindale
N/S: Santa Fe Dam Acces/Azusa Canyon Rd
E/W: Arrow Highway
Weather: Clear

File Name : 13_IRW_Azusa Canyon_Arrow Hwy PM
Site Code : 05117366
Start Date : 5/31/2017
Page No : 3

	Santa Fe Dam Access Road Southbound				Arrow Highway Westbound				Azusa Canyon Road Northbound				Arrow Highway Eastbound				
Start Time	Left	Thru	Right	App. Total	Left	Thru	Right	App. Total	Left	Thru	Right	App. Total	Left	Thru	Right	App. Total	Int. Total
Peak Hour Analysis From 04:30 PM to 05:15 PM - Peak 1 of 1																	
Peak Hour for Each Approach Begins at:																	
	04:30 PM				04:30 PM				04:30 PM				04:30 PM				
+0 mins.	**1**	0	0	**1**	**3**	**12**	0	**15**	**3**	0	1	**4**	**1**	8	0	9	
+15 mins.	0	0	**1**	1	1	8	1	10	1	0	3	4	0	7	**1**	8	
+30 mins.	0	0	0	0	0	9	1	10	0	0	**4**	4	0	**17**	1	**18**	
+45 mins.	0	0	0	0	0	8	**2**	10	0	0	1	1	1	6	1	8	
Total Volume	1	0	1	2	4	37	4	45	4	0	9	13	2	38	3	43	
% App. Total	50	0	50		8.9	82.2	8.9		30.8	0	69.2		4.7	88.4	7		
PHF	.250	.000	.250	.500	.333	.771	.500	.750	.333	.000	.563	.813	.500	.559	.750	.597	

Counts Unlimited
PO Box 1178
Corona, CA 92878
(951) 268-6268

City of Irwindale
N/S: Santa Fe Dam Acces/Azusa Canyon Rd
E/W: Arrow Highway
Weather: Clear

File Name : 13_IRW_Azusa Canyon_Arrow Hwy PM
Site Code : 05117366
Start Date : 5/31/2017
Page No : 1

Groups Printed- 3 Axle Vehicles

	Santa Fe Dam Access Road Southbound					Arrow Highway Westbound					Azusa Canyon Road Northbound					Arrow Highway Eastbound							
Start Time	Left	Thru	Right	RTOR	App. Total	Left	Thru	Right	RTOR	App. Total	Left	Thru	Right	RTOR	App. Total	Left	Thru	Right	RTOR	App. Total	Exclu. Total	Inclu. Total	Int. Total
04:00 PM	0	0	0	0	0	0	5	0	0	5	1	0	0	0	1	0	7	0	0	7	0	13	13
04:15 PM	0	0	1	1	1	0	11	0	0	11	0	0	0	0	0	0	8	0	0	8	1	20	21
04:30 PM	0	0	0	0	0	0	7	0	0	7	0	0	0	0	0	0	0	0	0	0	0	7	7
04:45 PM	0	0	0	0	0	1	10	0	0	11	0	0	0	0	0	0	4	0	0	4	0	15	15
Total	0	0	1	1	1	1	33	0	0	34	1	0	0	0	1	0	19	0	0	19	1	55	56
05:00 PM	0	0	0	0	0	0	5	0	0	5	0	0	1	1	1	0	3	0	0	3	1	9	10
05:15 PM	0	0	0	0	0	0	6	0	0	6	0	0	1	0	1	0	0	0	0	0	0	7	7
05:30 PM	0	0	0	0	0	0	7	0	0	7	0	0	0	0	0	0	1	0	0	1	0	8	8
05:45 PM	0	0	0	0	0	0	3	0	0	3	0	0	0	0	0	0	2	0	0	2	0	5	5
Total	0	0	0	0	0	0	21	0	0	21	0	0	2	1	2	0	6	0	0	6	1	29	30
Grand Total	0	0	1	1	1	1	54	0	0	55	1	0	2	1	3	0	25	0	0	25	2	84	86
Apprch %	0	0	100			1.8	98.2	0			33.3	0	66.7			0	100	0					
Total %	0	0	1.2		1.2	1.2	64.3	0		65.5	1.2	0	2.4		3.6	0	29.8	0		29.8	2.3	97.7	

	Santa Fe Dam Access Road Southbound				Arrow Highway Westbound				Azusa Canyon Road Northbound				Arrow Highway Eastbound				
Start Time	Left	Thru	Right	App. Total	Left	Thru	Right	App. Total	Left	Thru	Right	App. Total	Left	Thru	Right	App. Total	Int. Total
Peak Hour Analysis From 04:30 PM to 05:15 PM - Peak 1 of 1																	
Peak Hour for Entire Intersection Begins at 04:30 PM																	
04:30 PM	0	0	0	0	0	7	0	7	0	0	0	0	0	0	0	0	7
04:45 PM	0	0	0	0	**1**	**10**	0	**11**	0	0	0	0	0	**4**	0	**4**	**15**
05:00 PM	0	0	0	0	0	5	0	5	0	0	**1**	**1**	0	3	0	3	9
05:15 PM	0	0	0	0	0	6	0	6	0	0	1	1	0	0	0	0	7
Total Volume	0	0	0	0	1	28	0	29	0	0	2	2	0	7	0	7	38
% App. Total	0	0	0		3.4	96.6	0		0	0	100		0	100	0		
PHF	.000	.000	.000	.000	.250	.700	.000	.659	.000	.000	.500	.500	.000	.438	.000	.438	.633

Counts Unlimited
PO Box 1178
Corona, CA 92878
(951) 268-6268

City of Irwindale
N/S: Santa Fe Dam Acces/Azusa Canyon Rd
E/W: Arrow Highway
Weather: Clear

File Name : 13_IRW_Azusa Canyon_Arrow Hwy PM
Site Code : 05117366
Start Date : 5/31/2017
Page No : 2

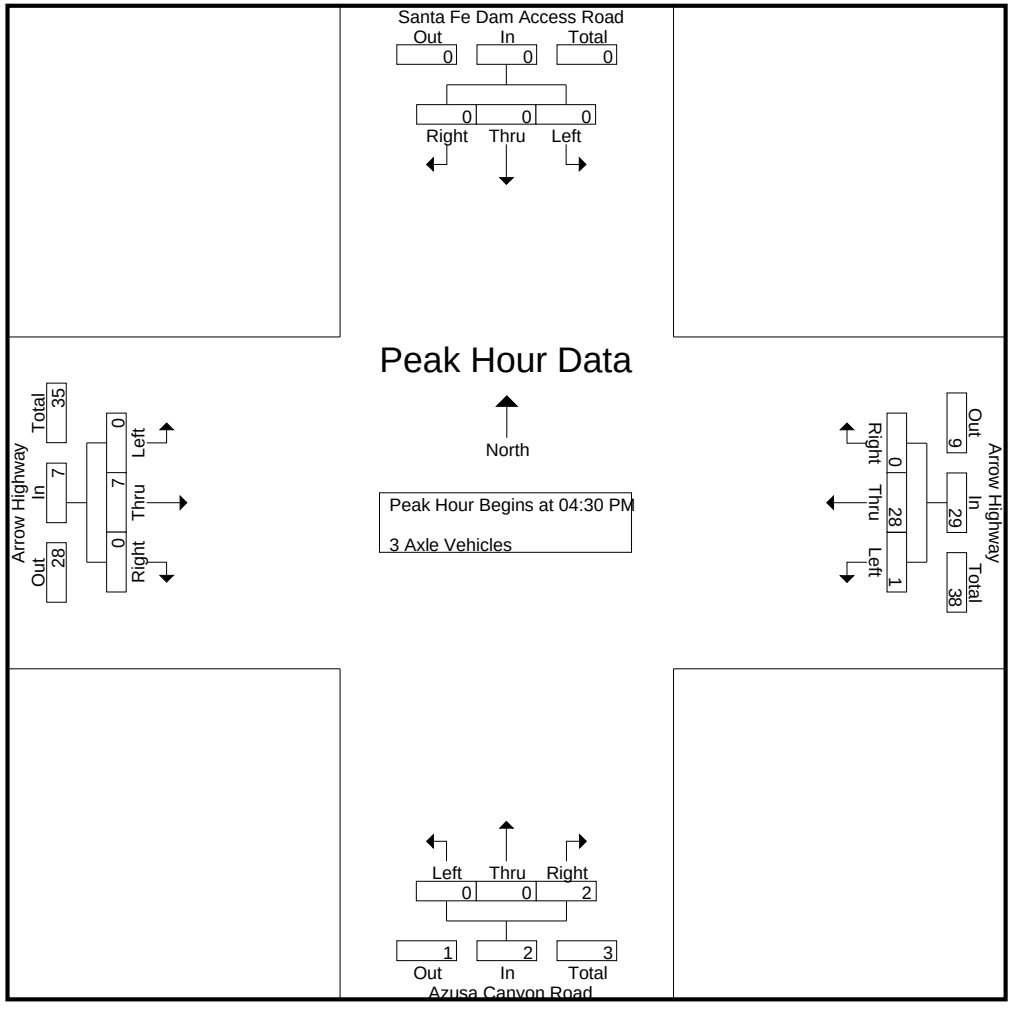

Counts Unlimited
PO Box 1178
Corona, CA 92878
(951) 268-6268

City of Irwindale
N/S: Santa Fe Dam Acces/Azusa Canyon Rd
E/W: Arrow Highway
Weather: Clear

File Name : 13_IRW_Azusa Canyon_Arrow Hwy PM
Site Code : 05117366
Start Date : 5/31/2017
Page No : 3

	Santa Fe Dam Access Road Southbound				Arrow Highway Westbound				Azusa Canyon Road Northbound				Arrow Highway Eastbound				
Start Time	Left	Thru	Right	App. Total	Left	Thru	Right	App. Total	Left	Thru	Right	App. Total	Left	Thru	Right	App. Total	Int. Total
Peak Hour Analysis From 04:30 PM to 05:15 PM - Peak 1 of 1																	
Peak Hour for Each Approach Begins at:																	
	04:30 PM				04:30 PM				04:30 PM				04:30 PM				
+0 mins.	0	0	0	0	0	7	0	7	0	0	0	0	0	0	0	0	
+15 mins.	0	0	0	0	**1**	**10**	0	**11**	0	0	0	0	0	**4**	0	**4**	
+30 mins.	0	0	0	0	0	5	0	5	0	0	**1**	**1**	0	3	0	3	
+45 mins.	0	0	0	0	0	6	0	6	0	0	1	1	0	0	0	0	
Total Volume	0	0	0	0	1	28	0	29	0	0	2	2	0	7	0	7	
% App. Total	0	0	0		3.4	96.6	0		0	0	100		0	100	0		
PHF	.000	.000	.000	.000	.250	.700	.000	.659	.000	.000	.500	.500	.000	.438	.000	.438	

Counts Unlimited
PO Box 1178
Corona, CA 92878
(951) 268-6268

City of Irwindale
N/S: Santa Fe Dam Acces/Azusa Canyon Rd
E/W: Arrow Highway
Weather: Clear

File Name : 13_IRW_Azusa Canyon_Arrow Hwy PM
Site Code : 05117366
Start Date : 5/31/2017
Page No : 1

Groups Printed- 4+ Axle Trucks

	Santa Fe Dam Access Road Southbound					Arrow Highway Westbound					Azusa Canyon Road Northbound					Arrow Highway Eastbound							
Start Time	Left	Thru	Right	RTOR	App. Total	Left	Thru	Right	RTOR	App. Total	Left	Thru	Right	RTOR	App. Total	Left	Thru	Right	RTOR	App. Total	Exclu. Total	Inclu. Total	Int. Total
04:00 PM	0	0	0	0	0	1	6	0	0	7	1	0	1	0	2	0	8	0	0	8	0	17	17
04:15 PM	0	0	0	0	0	0	3	0	0	3	0	0	0	0	0	0	6	1	0	7	0	10	10
04:30 PM	0	0	0	0	0	1	7	0	0	8	0	0	0	0	0	0	1	0	0	1	0	9	9
04:45 PM	0	0	0	0	0	0	2	0	0	2	1	0	1	0	2	0	5	1	1	6	1	10	11
Total	0	0	0	0	0	2	18	0	0	20	2	0	2	0	4	0	20	2	1	22	1	46	47
05:00 PM	0	0	0	0	0	0	5	0	0	5	0	0	0	0	0	0	4	1	0	5	0	10	10
05:15 PM	0	0	0	0	0	0	2	0	0	2	0	0	0	0	0	0	3	1	0	4	0	6	6
05:30 PM	0	0	0	0	0	1	2	0	0	3	0	0	0	0	0	0	4	0	0	4	0	7	7
05:45 PM	0	0	0	0	0	1	5	0	0	6	0	0	0	0	0	0	3	0	0	3	0	9	9
Total	0	0	0	0	0	2	14	0	0	16	0	0	0	0	0	0	14	2	0	16	0	32	32
Grand Total	0	0	0	0	0	4	32	0	0	36	2	0	2	0	4	0	34	4	1	38	1	78	79
Apprch %	0	0	0			11.1	88.9	0			50	0	50			0	89.5	10.5					
Total %	0	0	0		0	5.1	41	0		46.2	2.6	0	2.6		5.1	0	43.6	5.1		48.7	1.3	98.7	

	Santa Fe Dam Access Road Southbound				Arrow Highway Westbound				Azusa Canyon Road Northbound				Arrow Highway Eastbound				
Start Time	Left	Thru	Right	App. Total	Left	Thru	Right	App. Total	Left	Thru	Right	App. Total	Left	Thru	Right	App. Total	Int. Total
Peak Hour Analysis From 04:30 PM to 05:15 PM - Peak 1 of 1																	
Peak Hour for Entire Intersection Begins at 04:30 PM																	
04:30 PM	0	0	0	0	**1**	**7**	0	**8**	0	0	0	0	0	1	0	1	9
04:45 PM	0	0	0	0	0	2	0	2	**1**	0	**1**	**2**	0	**5**	**1**	**6**	**10**
05:00 PM	0	0	0	0	0	5	0	5	0	0	0	0	0	4	1	5	10
05:15 PM	0	0	0	0	0	2	0	2	0	0	0	0	0	3	1	4	6
Total Volume	0	0	0	0	1	16	0	17	1	0	1	2	0	13	3	16	35
% App. Total	0	0	0		5.9	94.1	0		50	0	50		0	81.2	18.8		
PHF	.000	.000	.000	.000	.250	.571	.000	.531	.250	.000	.250	.250	.000	.650	.750	.667	.875

Counts Unlimited
PO Box 1178
Corona, CA 92878
(951) 268-6268

City of Irwindale
N/S: Santa Fe Dam Acces/Azusa Canyon Rd
E/W: Arrow Highway
Weather: Clear

File Name : 13_IRW_Azusa Canyon_Arrow Hwy PM
Site Code : 05117366
Start Date : 5/31/2017
Page No : 2

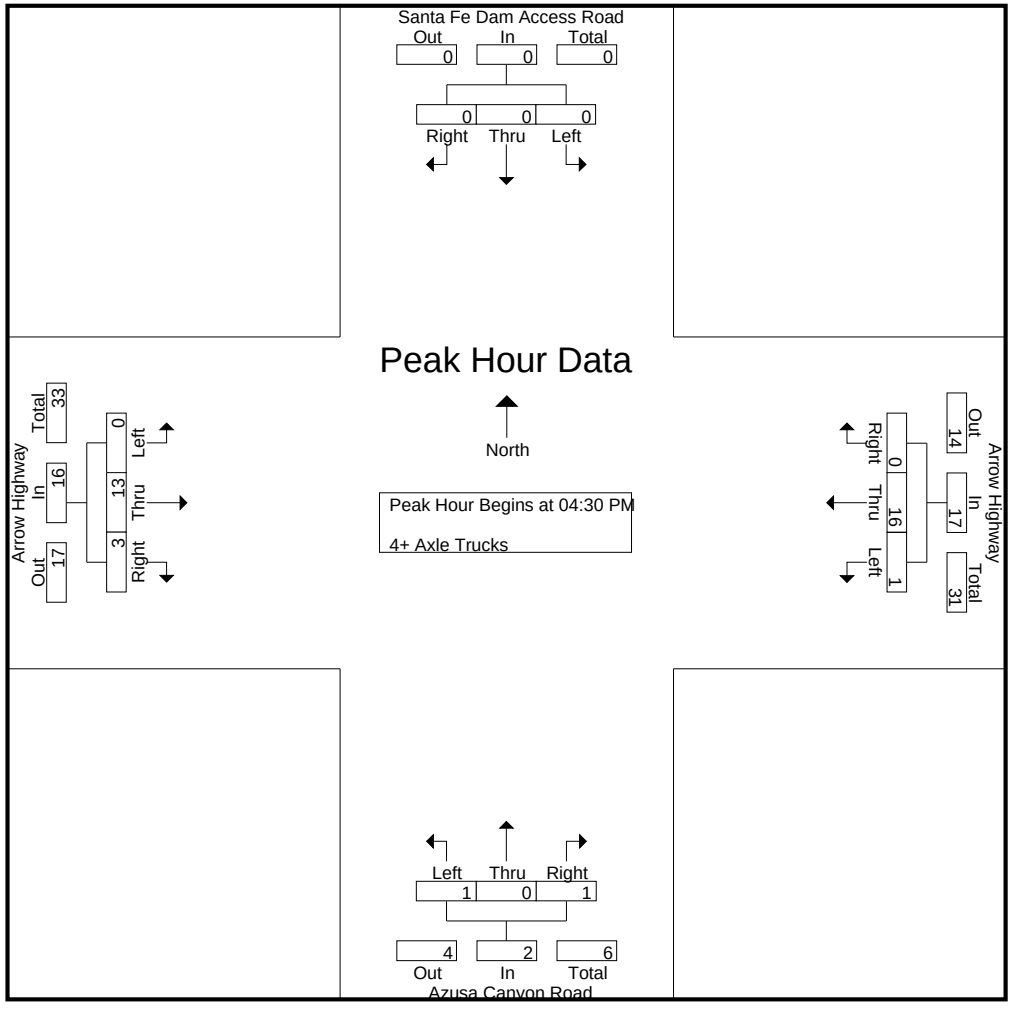

Counts Unlimited
PO Box 1178
Corona, CA 92878
(951) 268-6268

City of Irwindale
N/S: Santa Fe Dam Acces/Azusa Canyon Rd
E/W: Arrow Highway
Weather: Clear

File Name : 13_IRW_Azusa Canyon_Arrow Hwy PM
Site Code : 05117366
Start Date : 5/31/2017
Page No : 3

	Santa Fe Dam Access Road Southbound				Arrow Highway Westbound				Azusa Canyon Road Northbound				Arrow Highway Eastbound				
Start Time	Left	Thru	Right	App. Total	Left	Thru	Right	App. Total	Left	Thru	Right	App. Total	Left	Thru	Right	App. Total	Int. Total
Peak Hour Analysis From 04:30 PM to 05:15 PM - Peak 1 of 1																	
Peak Hour for Each Approach Begins at:																	
	04:30 PM				04:30 PM				04:30 PM				04:30 PM				
+0 mins.	0	0	0	0	**1**	**7**	0	**8**	0	0	0	0	0	1	0	1	
+15 mins.	0	0	0	0	0	2	0	2	**1**	0	**1**	**2**	0	**5**	**1**	**6**	
+30 mins.	0	0	0	0	0	5	0	5	0	0	0	0	0	4	1	5	
+45 mins.	0	0	0	0	0	2	0	2	0	0	0	0	0	3	1	4	
Total Volume	0	0	0	0	1	16	0	17	1	0	1	2	0	13	3	16	
% App. Total	0	0	0		5.9	94.1	0		50	0	50		0	81.2	18.8		
PHF	.000	.000	.000	.000	.250	.571	.000	.531	.250	.000	.250	.250	.000	.650	.750	.667	

Location: Irwindale
N/S: Santa Fe Dam Acces/Azusa Canyon Rd
E/W: Arrow Highway

Date: 5/31/2017
Day: Wednesday

PEDESTRIANS

	North Leg Santa Fe Dam Access	East Leg Arrow Highway	South Leg Azusa Canyon Road	West Leg Arrow Highway	TOTAL
7:00 AM	0	4	3	0	7
7:15 AM	0	0	0	0	0
7:30 AM	0	2	2	0	4
7:45 AM	0	2	2	0	4
8:00 AM	0	1	0	0	1
8:15 AM	0	0	1	0	1
8:30 AM	0	0	0	0	0
8:45 AM	1	0	1	0	2
TOTAL VOLUMES:	1	9	9	0	19

	North Leg Santa Fe Dam Access	East Leg Arrow Highway	South Leg Azusa Canyon Road	West Leg Arrow Highway	TOTAL
4:00 PM	0	2	2	0	4
4:15 PM	0	1	0	0	1
4:30 PM	0	0	0	0	0
4:45 PM	0	1	0	0	1
5:00 PM	0	6	6	0	12
5:15 PM	0	0	0	0	0
5:30 PM	0	0	0	0	0
5:45 PM	0	0	0	0	0
TOTAL VOLUMES:	0	10	8	0	18

Counts Unlimited
P.O. Box 1178
Corona, CA 92878
(951) 268-6268

Location: Irwindale
N/S: Santa Fe Dam Acces/Azusa Canyon Rd
E/W: Arrow Highway

Date: 5/31/2017
Day: Wednesday

BICYCLES

	North Leg Santa Fe Dam Access	East Leg Arrow Highway	South Leg Azusa Canyon Road	West Leg Arrow Highway	TOTAL
7:00 AM	0	0	1	0	1
7:15 AM	1	0	0	0	1
7:30 AM	0	0	1	0	1
7:45 AM	0	1	0	0	1
8:00 AM	1	1	1	0	3
8:15 AM	1	0	1	1	3
8:30 AM	0	0	1	0	1
8:45 AM	1	4	1	0	6
TOTAL VOLUMES:	4	6	6	1	17

	North Leg Santa Fe Dam Access	East Leg Arrow Highway	South Leg Azusa Canyon Road	West Leg Arrow Highway	TOTAL
4:00 PM	1	1	0	0	2
4:15 PM	0	3	0	0	3
4:30 PM	0	2	0	0	2
4:45 PM	1	3	3	0	7
5:00 PM	2	1	0	0	3
5:15 PM	1	2	0	0	3
5:30 PM	0	1	0	0	1
5:45 PM	1	2	0	1	4
TOTAL VOLUMES:	6	15	3	1	25

Counts Unlimited
P.O. Box 1178
Corona, CA 92878
(951) 268-6268

INTERSECTION TURNING MOVEMENT COUNTS

PREPARED BY: AimTD LLC. tel: 714 253 7888 cs@aimtd.com

DATE: Tue, Jun 5, 18

LOCATION: Irwindale
NORTH & SOUTH: 4th
EAST & WEST: Arrow

PROJECT #: SC1780
LOCATION #: 9
CONTROL: SIGNAL

NOTES:

AM / PM / MD / OTHER / OTHER — ▲ N ◄ W E ► S ▼

		NORTHBOUND 4th			SOUTHBOUND 4th			EASTBOUND Arrow			WESTBOUND Arrow				U-TURNS				
	LANES:	NL 1.5	NT 0.5	NR 1	SL 0	ST 1	SR 0	EL 1	ET 3	ER 1	WL 1	WT 2	WR 0	TOTAL	NB 0	SB 0	EB 0	WB 0	TTL
AM	7:00 AM	20	1	2	2	0	2	4	130	11	16	394	1	583	1	0	0	10	11
	7:15 AM	20	0	3	1	2	3	1	148	21	15	374	1	589	0	0	0	6	6
	7:30 AM	22	0	6	1	0	4	4	199	26	23	406	1	692	0	0	0	11	11
	7:45 AM	17	0	5	0	0	4	10	227	42	14	381	0	700	0	0	0	7	7
	8:00 AM	17	1	8	1	0	1	5	195	37	25	334	2	626	0	0	0	14	14
	8:15 AM	19	1	4	0	3	3	7	175	35	24	285	2	558	0	0	0	9	9
	8:30 AM	30	1	5	2	1	3	6	174	17	26	249	1	515	0	0	2	12	14
	8:45 AM	21	2	9	2	1	0	6	168	40	19	228	1	497	0	0	0	7	7
	VOLUMES	166	6	42	9	7	20	43	1,416	229	162	2,651	9	4,760	1	0	2	76	79
	APPROACH %	78%	3%	20%	25%	19%	56%	3%	84%	14%	6%	94%	0%						
	APP/DEPART	214	/	56	36	/	323	1,688	/	1,543	2,822	/	2,838	0					
	BEGIN PEAK HR		7:15 AM																
	VOLUMES	76	1	22	3	2	12	20	769	126	77	1,495	4	2,607					
	APPROACH %	77%	1%	22%	18%	12%	71%	2%	84%	14%	5%	95%	0%						
	PEAK HR FACTOR		0.884			0.708			0.820			0.916		0.931					
	APP/DEPART	99	/	25	17	/	167	915	/	832	1,576	/	1,583	0					
PM	4:00 PM	34	1	10	6	0	7	3	383	10	17	228	0	699	0	0	0	10	10
	4:15 PM	20	1	9	3	2	7	2	475	13	10	209	2	753	0	0	0	4	4
	4:30 PM	32	1	7	0	0	1	2	417	12	8	225	0	705	0	0	0	5	5
	4:45 PM	24	0	7	5	0	4	4	446	9	7	206	2	714	0	0	0	2	2
	5:00 PM	46	1	16	2	0	4	1	417	6	11	255	0	759	0	0	0	6	6
	5:15 PM	22	0	9	3	0	1	0	447	8	11	250	0	751	0	0	0	6	6
	5:30 PM	51	0	12	1	0	3	0	448	16	12	212	0	755	0	0	0	5	5
	5:45 PM	16	0	7	1	0	3	4	445	7	7	187	0	677	0	0	0	3	3
	VOLUMES	245	4	77	21	2	30	16	3,478	81	83	1,772	4	5,813	0	0	0	41	41
	APPROACH %	75%	1%	24%	40%	4%	57%	0%	97%	2%	4%	95%	0%						
	APP/DEPART	326	/	24	53	/	125	3,575	/	3,617	1,859	/	2,047	0					
	BEGIN PEAK HR		4:45 PM																
	VOLUMES	143	1	44	11	0	12	5	1,758	39	41	923	2	2,979					
	APPROACH %	76%	1%	23%	48%	0%	52%	0%	98%	2%	4%	96%	0%						
	PEAK HR FACTOR		0.746			0.639			0.971			0.908		0.981					
	APP/DEPART	188	/	8	23	/	61	1,802	/	1,832	966	/	1,078	0					

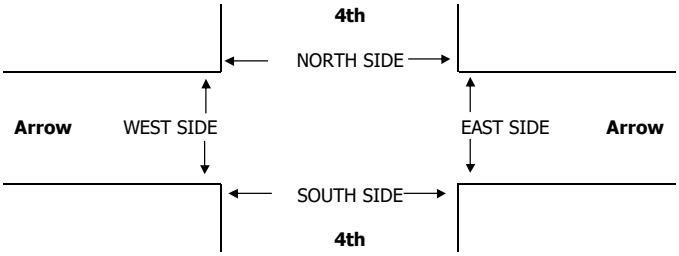

		PEDESTRIAN + BIKE CROSSINGS					PEDESTRIAN CROSSINGS					BICYCLE CROSSINGS				
		N SIDE	S SIDE	E SIDE	W SIDE	TOTAL	N SIDE	S SIDE	E SIDE	W SIDE	TOTAL	NS	SS	ES	WS	TOTAL
AM	7:00 AM	0	0	0	0	0	0	0	0	0	0	0	0	0	0	0
	7:15 AM	0	0	0	0	0	0	0	0	0	0	0	0	0	0	0
	7:30 AM	0	0	0	0	0	0	0	0	0	0	0	0	0	0	0
	7:45 AM	0	0	0	0	0	0	0	0	0	0	0	0	0	0	0
	8:00 AM	0	0	0	0	0	0	0	0	0	0	0	0	0	0	0
	8:15 AM	0	0	0	0	0	0	0	0	0	0	0	0	0	0	0
	8:30 AM	0	0	0	0	0	0	0	0	0	0	0	0	0	0	0
	8:45 AM	0	0	0	0	0	0	0	0	0	0	0	0	0	0	0
	TOTAL	0	0	0	0	0	0	0	0	0	0	0	0	0	0	0
	AM BEGIN PEAK HR	7:15 AM					0	0	0	0	0					
PM	4:00 PM	0	0	0	0	0	0	0	0	0	0	0	0	0	0	0
	4:15 PM	0	0	0	0	0	0	0	0	0	0	0	0	0	0	0
	4:30 PM	0	0	0	0	0	0	0	0	0	0	0	0	0	0	0
	4:45 PM	0	0	0	0	0	0	0	0	0	0	0	0	0	0	0
	5:00 PM	0	0	0	0	0	0	0	0	0	0	0	0	0	0	0
	5:15 PM	0	0	0	0	0	0	0	0	0	0	0	0	0	0	0
	5:30 PM	0	0	0	0	0	0	0	0	0	0	0	0	0	0	0
	5:45 PM	0	0	0	0	0	0	0	0	0	0	0	0	0	0	0
	TOTAL	0	0	0	0	0	0	0	0	0	0	0	0	0	0	0
	PM BEGIN PEAK HR	4:45 PM					0	0	0	0	0					

AimTD LLC

TURNING MOVEMENT COUNTS

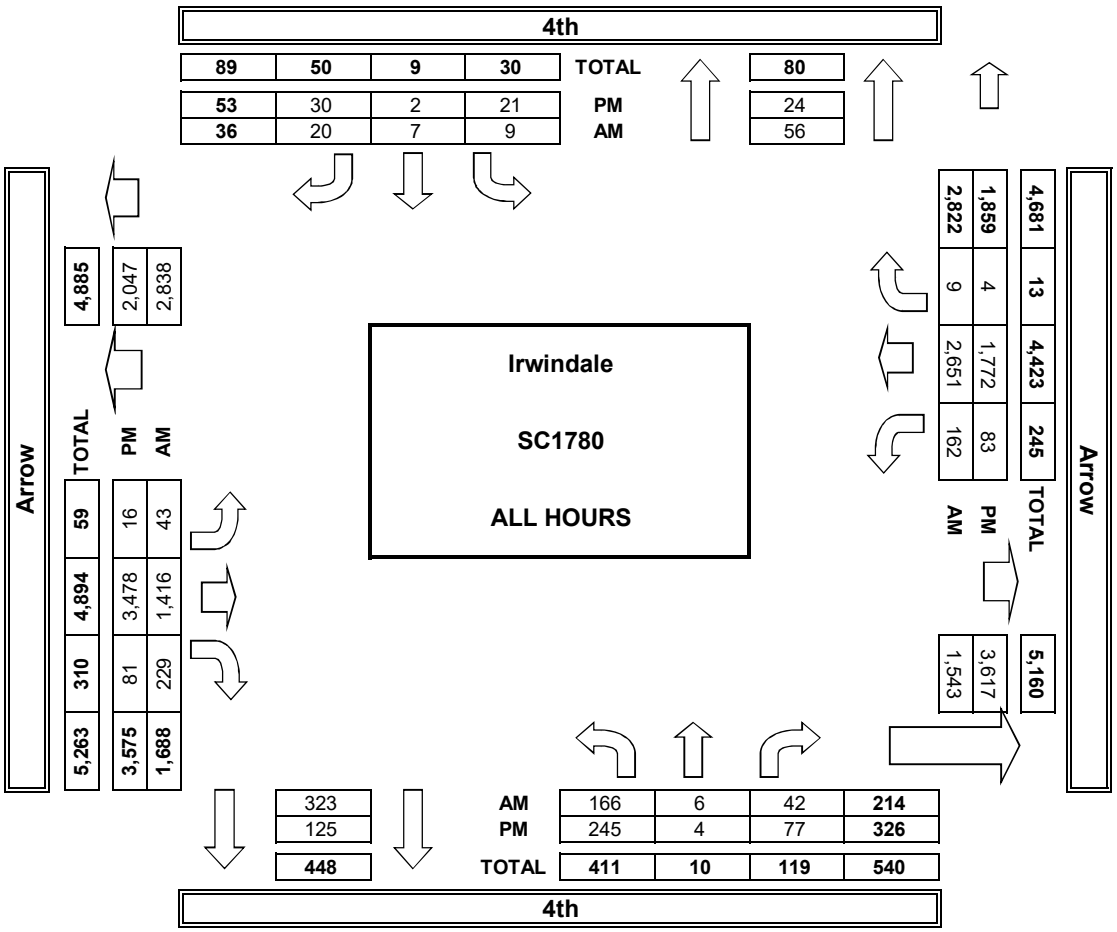

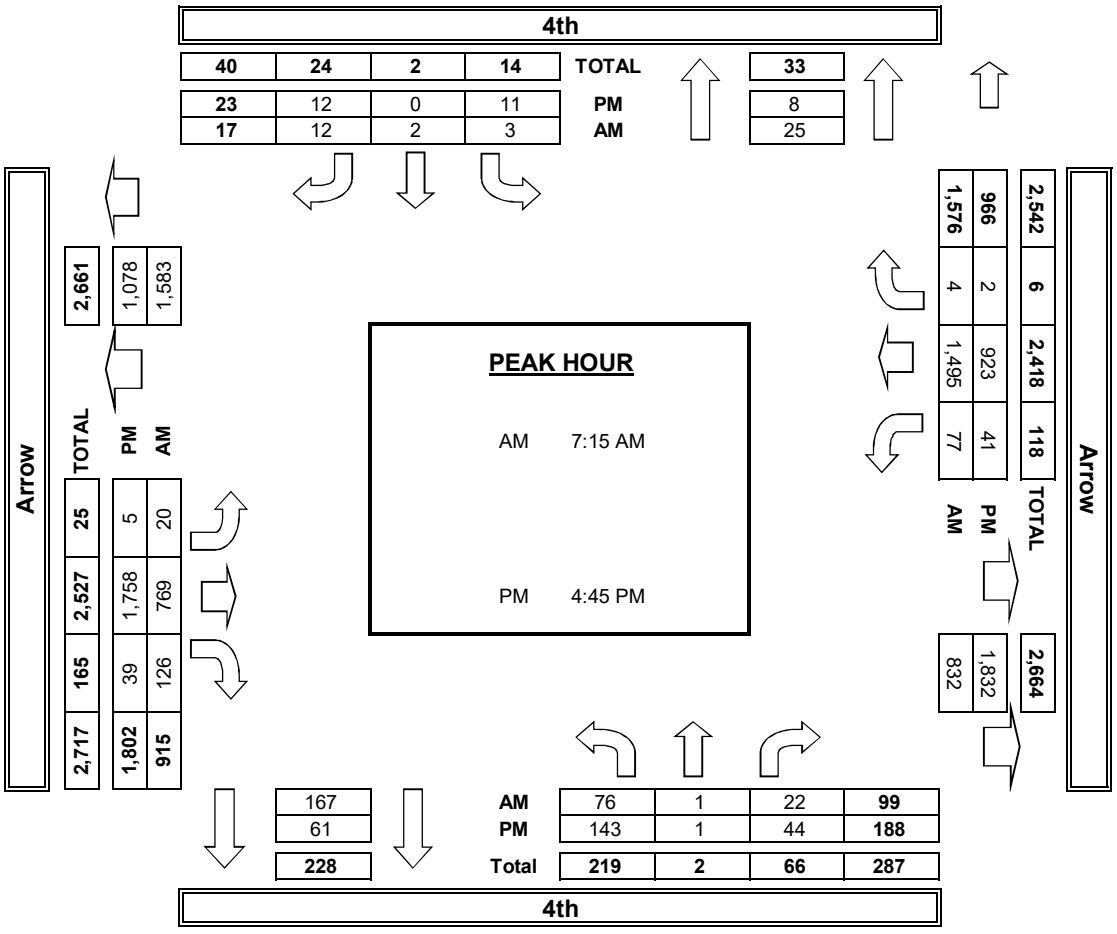

INTERSECTION TURNING MOVEMENT COUNTS

PREPARED BY: AimTD LLC. tel: 714 253 7888 cs@aimtd.com

DATE: Tue, Jun 5, 18

LOCATION: Irwindale
NORTH & SOUTH: Irwindale
EAST & WEST: I-210 WB Ramps

PROJECT #: SC1780
LOCATION #: 10
CONTROL: SIGNAL

NOTES:

AM / PM / MD / OTHER / OTHER — ▲ N ◄ W E ► S ▼

		NORTHBOUND Irwindale			SOUTHBOUND Irwindale			EASTBOUND I-210 WB Ramps			WESTBOUND I-210 WB Ramps				U-TURNS				
	LANES:	NL X	NT X	NR X	SL X	ST X	SR 0.5	EL X	ET X	ER X	WL X	WT X	WR X	TOTAL	NB 0	SB 0	EB 0	WB 0	TTL
AM	7:00 AM	0	0	0	0	0	147	0	0	0	0	0	0	147	0	0	0	0	0
	7:15 AM	0	0	0	0	0	136	0	0	0	0	0	0	136	0	0	0	0	0
	7:30 AM	0	0	0	0	0	145	0	0	0	0	0	0	145	0	0	0	0	0
	7:45 AM	0	0	0	0	0	137	0	0	0	0	0	0	137	0	0	0	0	0
	8:00 AM	0	0	0	0	0	134	0	0	0	0	0	0	134	0	0	0	0	0
	8:15 AM	0	0	0	0	0	155	0	0	0	0	0	0	155	0	0	0	0	0
	8:30 AM	0	0	0	0	0	132	0	0	0	0	0	0	132	0	0	0	0	0
	8:45 AM	0	0	0	0	0	108	0	0	0	0	0	0	108	0	0	0	0	0
	VOLUMES	0	0	0	0	0	1,094	0	0	0	0	0	0	1,094	0	0	0	0	0
	APPROACH %	0%	0%	0%	0%	0%	100%	0%	0%	0%	0%	0%	0%						
	APP/DEPART	0	/	0	1,094	/	0	0	/	0	0	/	1,094	0					
	BEGIN PEAK HR		7:30 AM																
	VOLUMES	0	0	0	0	0	571	0	0	0	0	0	0	571					
	APPROACH %	0%	0%	0%	0%	0%	100%	0%	0%	0%	0%	0%	0%						
	PEAK HR FACTOR		0.000			0.921			0.000			0.000		0.921					
	APP/DEPART	0	/	0	571	/	0	0	/	0	0	/	571	0					
PM	4:00 PM	0	0	0	0	0	118	0	0	0	0	0	0	118	0	0	0	0	0
	4:15 PM	0	0	0	0	0	100	0	0	0	0	0	0	100	0	0	0	0	0
	4:30 PM	0	0	0	0	0	125	0	0	0	0	0	0	125	0	0	0	0	0
	4:45 PM	0	0	0	0	0	120	0	0	0	0	0	0	120	0	0	0	0	0
	5:00 PM	0	0	0	0	0	130	0	0	0	0	0	0	130	0	0	0	0	0
	5:15 PM	0	0	0	0	0	106	0	0	0	0	0	0	106	0	0	0	0	0
	5:30 PM	0	0	0	0	0	131	0	0	0	0	0	0	131	0	0	0	0	0
	5:45 PM	0	0	0	0	0	120	0	0	0	0	0	0	120	0	0	0	0	0
	VOLUMES	0	0	0	0	0	950	0	0	0	0	0	0	950	0	0	0	0	0
	APPROACH %	0%	0%	0%	0%	0%	100%	0%	0%	0%	0%	0%	0%						
	APP/DEPART	0	/	0	950	/	0	0	/	0	0	/	950	0					
	BEGIN PEAK HR		5:00 PM																
	VOLUMES	0	0	0	0	0	487	0	0	0	0	0	0	487					
	APPROACH %	0%	0%	0%	0%	0%	100%	0%	0%	0%	0%	0%	0%						
	PEAK HR FACTOR		0.000			0.929			0.000			0.000		0.929					
	APP/DEPART	0	/	0	487	/	0	0	/	0	0	/	487	0					

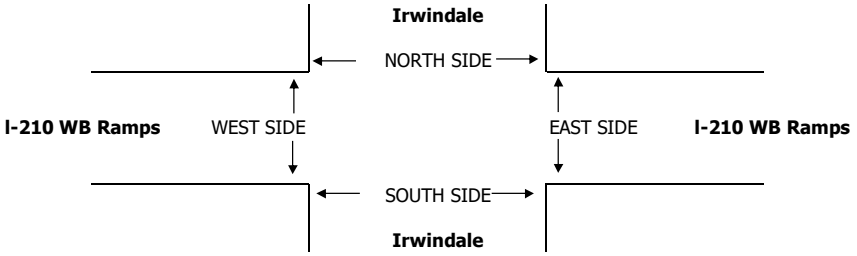

		PEDESTRIAN + BIKE CROSSINGS					PEDESTRIAN CROSSINGS					BICYCLE CROSSINGS				
		N SIDE	S SIDE	E SIDE	W SIDE	TOTAL	N SIDE	S SIDE	E SIDE	W SIDE	TOTAL	NS	SS	ES	WS	TOTAL
AM	7:00 AM	0	0	0	0	0	0	0	0	0	0	0	0	0	0	0
	7:15 AM	0	0	0	0	0	0	0	0	0	0	0	0	0	0	0
	7:30 AM	0	0	0	0	0	0	0	0	0	0	0	0	0	0	0
	7:45 AM	0	0	0	0	0	0	0	0	0	0	0	0	0	0	0
	8:00 AM	0	0	0	0	0	0	0	0	0	0	0	0	0	0	0
	8:15 AM	0	0	0	0	0	0	0	0	0	0	0	0	0	0	0
	8:30 AM	0	0	0	0	0	0	0	0	0	0	0	0	0	0	0
	8:45 AM	0	0	0	0	0	0	0	0	0	0	0	0	0	0	0
	TOTAL	0	0	0	0	0	0	0	0	0	0	0	0	0	0	0
	AM BEGIN PEAK HR	7:30 AM					0	0	0	0	0					
PM	4:00 PM	0	0	0	0	0	0	0	0	0	0	0	0	0	0	0
	4:15 PM	0	0	0	0	0	0	0	0	0	0	0	0	0	0	0
	4:30 PM	0	0	0	0	0	0	0	0	0	0	0	0	0	0	0
	4:45 PM	0	0	0	0	0	0	0	0	0	0	0	0	0	0	0
	5:00 PM	0	0	0	0	0	0	0	0	0	0	0	0	0	0	0
	5:15 PM	0	0	0	0	0	0	0	0	0	0	0	0	0	0	0
	5:30 PM	0	0	0	0	0	0	0	0	0	0	0	0	0	0	0
	5:45 PM	0	0	0	0	0	0	0	0	0	0	0	0	0	0	0
	TOTAL	0	0	0	0	0	0	0	0	0	0	0	0	0	0	0
	PM BEGIN PEAK HR	5:00 PM					0	0	0	0	0					

AimTD LLC

TURNING MOVEMENT COUNTS

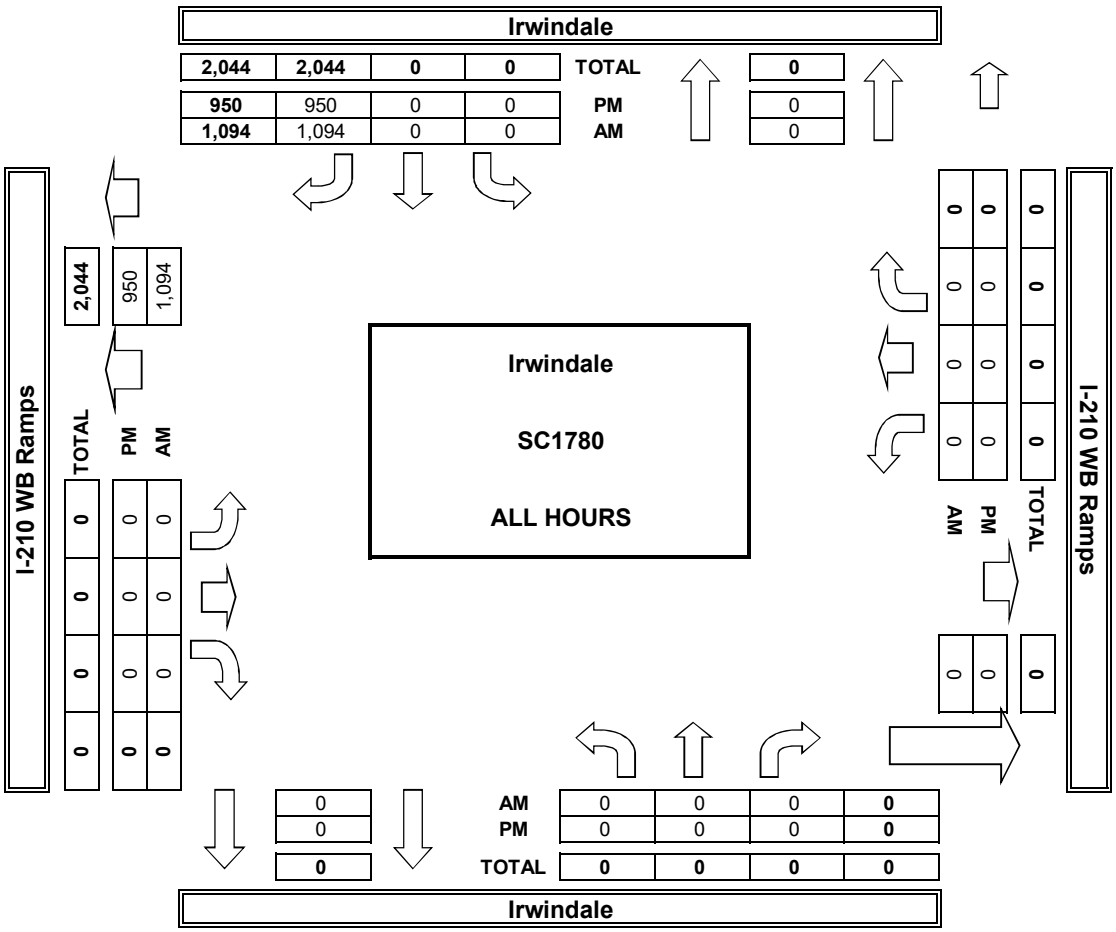

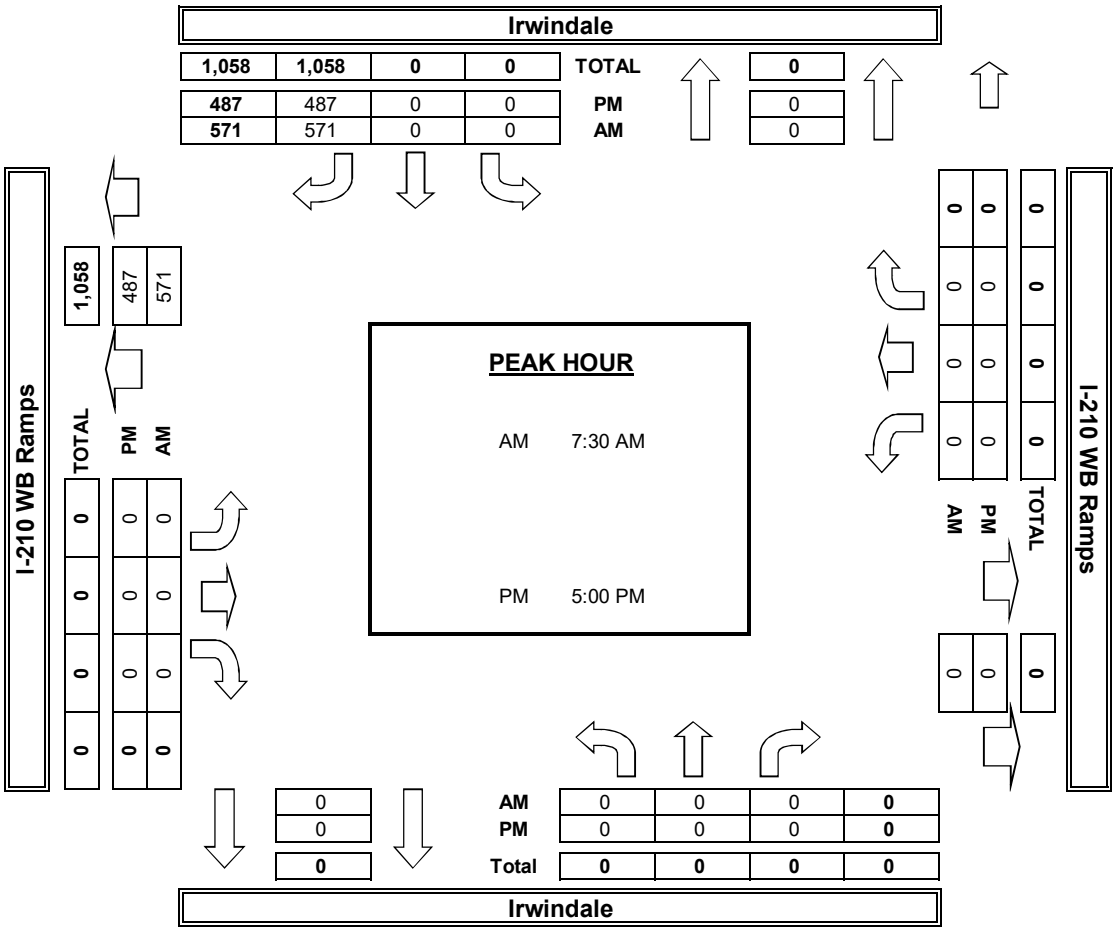

INTERSECTION TURNING MOVEMENT COUNTS

PREPARED BY: AimTD LLC. tel: 714 253 7888 cs@aimtd.com

DATE: Tue, Jun 5, 18

LOCATION: Irwindale
NORTH & SOUTH: Irwindale
EAST & WEST: I-210 WB Ramps

PROJECT #: SC1780
LOCATION #: 10
CONTROL: SIGNAL

NOTES:

AM / PM / MD / OTHER / OTHER — ▲ N ◄ W E ► S ▼

		NORTHBOUND Irwindale			SOUTHBOUND Irwindale			EASTBOUND I-210 WB Ramps			WESTBOUND I-210 WB Ramps				U-TURNS				
	LANES:	NL X	NT 2	NR 1	SL X	ST 2	SR X	EL X	ET X	ER X	WL 1.5	WT X	WR 0.5	TOTAL	NB 0	SB 0	EB 0	WB 0	TTL
AM	7:00 AM	0	171	127	0	255	0	0	0	0	18	0	21	592	0	0	0	0	0
	7:15 AM	0	170	111	0	236	0	0	0	0	42	0	38	597	0	0	0	0	0
	7:30 AM	0	213	127	0	274	0	0	0	0	40	0	36	690	0	0	0	0	0
	7:45 AM	0	231	121	0	251	0	0	0	0	101	0	39	743	0	0	0	0	0
	8:00 AM	0	193	96	0	251	0	0	0	0	74	0	53	667	0	0	0	0	0
	8:15 AM	0	189	119	0	273	0	0	0	0	66	0	41	688	0	0	0	0	0
	8:30 AM	0	192	119	0	234	0	0	0	0	55	0	48	648	0	0	0	0	0
	8:45 AM	0	178	107	0	194	0	0	0	0	49	0	47	575	0	0	0	0	0
	VOLUMES	0	1,537	927	0	1,968	0	0	0	0	445	0	323	5,200	0	0	0	0	0
	APPROACH %	0%	62%	38%	0%	100%	0%	0%	0%	0%	58%	0%	42%						
	APP/DEPART	2,464	/	1,860	1,968	/	2,413	0	/	927	768	/	0	0					
	BEGIN PEAK HR		7:30 AM																
	VOLUMES	0	826	463	0	1,049	0	0	0	0	281	0	169	2,788					
	APPROACH %	0%	64%	36%	0%	100%	0%	0%	0%	0%	62%	0%	38%						
	PEAK HR FACTOR		0.915			0.957			0.000			0.804		0.938					
	APP/DEPART	1,289	/	995	1,049	/	1,330	0	/	463	450	/	0	0					
PM	4:00 PM	0	184	145	0	348	0	0	0	0	46	0	59	782	0	0	0	0	0
	4:15 PM	0	175	126	0	324	0	0	0	0	48	0	57	730	0	0	0	0	0
	4:30 PM	0	187	169	0	364	0	0	0	0	42	0	46	808	0	0	0	0	0
	4:45 PM	0	201	145	0	382	0	0	0	0	48	0	39	815	0	0	0	0	0
	5:00 PM	0	195	153	0	386	0	0	0	0	56	0	53	843	0	0	0	0	0
	5:15 PM	0	210	133	0	341	0	0	0	0	46	0	68	798	0	0	0	0	0
	5:30 PM	0	181	148	0	380	0	0	0	0	53	0	45	807	0	0	0	0	0
	5:45 PM	0	169	120	0	349	0	0	0	0	41	0	54	733	0	0	0	0	0
	VOLUMES	0	1,502	1,139	0	2,874	0	0	0	0	380	0	421	6,316	0	0	0	0	0
	APPROACH %	0%	57%	43%	0%	100%	0%	0%	0%	0%	47%	0%	53%						
	APP/DEPART	2,641	/	1,923	2,874	/	3,254	0	/	1,139	801	/	0	0					
	BEGIN PEAK HR		4:30 PM																
	VOLUMES	0	793	600	0	1,473	0	0	0	0	192	0	206	3,264					
	APPROACH %	0%	57%	43%	0%	100%	0%	0%	0%	0%	48%	0%	52%						
	PEAK HR FACTOR		0.978			0.954			0.000			0.873		0.968					
	APP/DEPART	1,393	/	999	1,473	/	1,665	0	/	600	398	/	0	0					

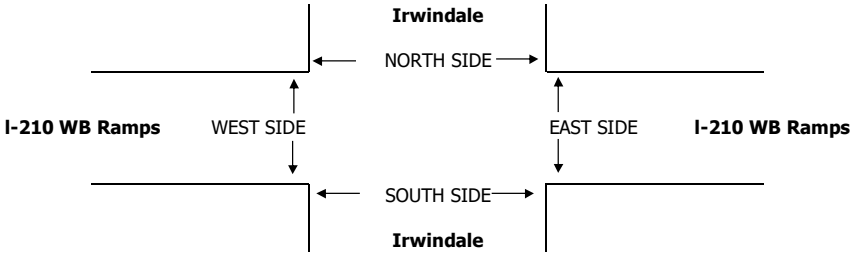

		PEDESTRIAN + BIKE CROSSINGS					PEDESTRIAN CROSSINGS					BICYCLE CROSSINGS				
		N SIDE	S SIDE	E SIDE	W SIDE	TOTAL	N SIDE	S SIDE	E SIDE	W SIDE	TOTAL	NS	SS	ES	WS	TOTAL
AM	7:00 AM	0	0	0	0	0	0	0	0	0	0	0	0	0	0	0
	7:15 AM	0	0	0	0	0	0	0	0	0	0	0	0	0	0	0
	7:30 AM	0	0	0	0	0	0	0	0	0	0	0	0	0	0	0
	7:45 AM	0	0	0	0	0	0	0	0	0	0	0	0	0	0	0
	8:00 AM	0	0	0	0	0	0	0	0	0	0	0	0	0	0	0
	8:15 AM	0	0	0	0	0	0	0	0	0	0	0	0	0	0	0
	8:30 AM	0	0	0	0	0	0	0	0	0	0	0	0	0	0	0
	8:45 AM	0	0	0	0	0	0	0	0	0	0	0	0	0	0	0
	TOTAL	0	0	0	0	0	0	0	0	0	0	0	0	0	0	0
	AM BEGIN PEAK HR	7:30 AM					0	0	0	0	0					
PM	4:00 PM	0	0	0	0	0	0	0	0	0	0	0	0	0	0	0
	4:15 PM	0	0	0	0	0	0	0	0	0	0	0	0	0	0	0
	4:30 PM	0	0	0	0	0	0	0	0	0	0	0	0	0	0	0
	4:45 PM	0	0	0	0	0	0	0	0	0	0	0	0	0	0	0
	5:00 PM	0	0	0	0	0	0	0	0	0	0	0	0	0	0	0
	5:15 PM	0	0	0	0	0	0	0	0	0	0	0	0	0	0	0
	5:30 PM	0	0	0	0	0	0	0	0	0	0	0	0	0	0	0
	5:45 PM	0	0	0	0	0	0	0	0	0	0	0	0	0	0	0
	TOTAL	0	0	0	0	0	0	0	0	0	0	0	0	0	0	0
	PM BEGIN PEAK HR	4:30 PM					0	0	0	0	0					

AimTD LLC

TURNING MOVEMENT COUNTS

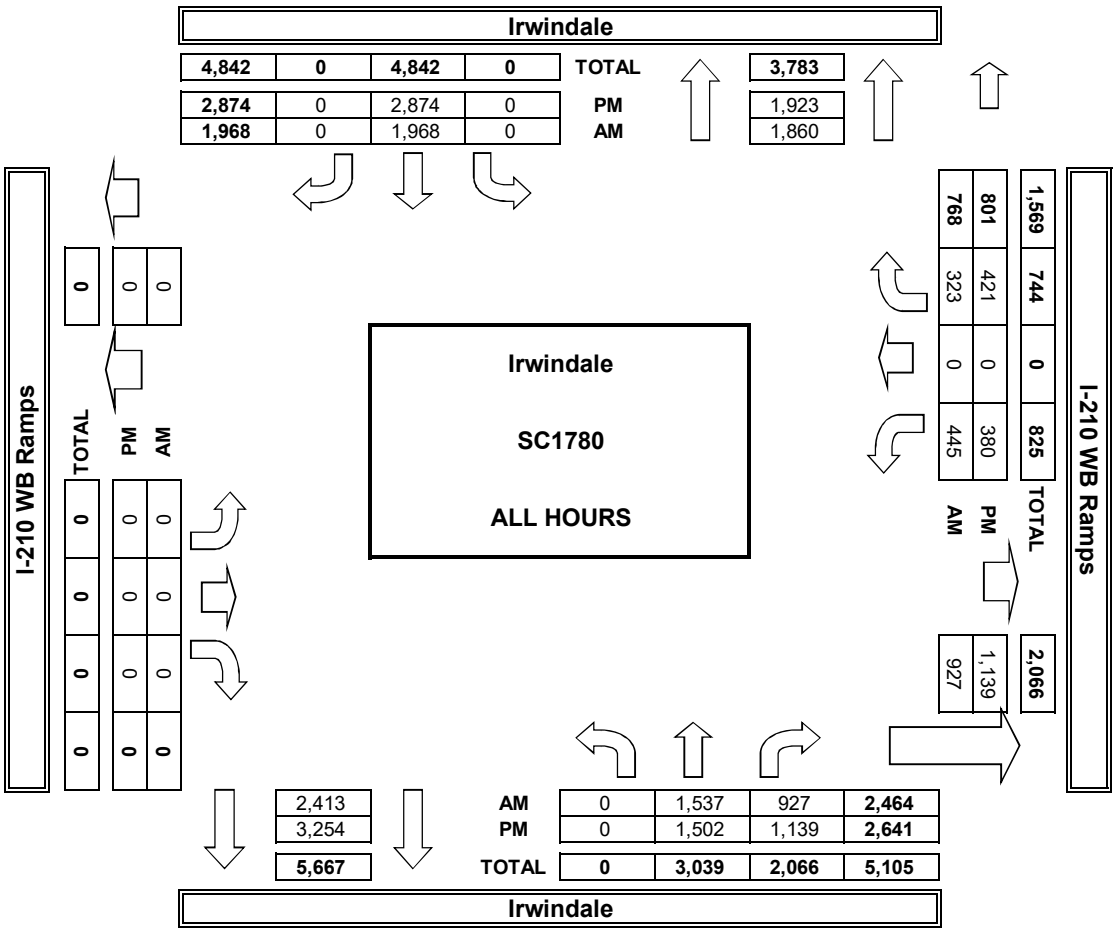

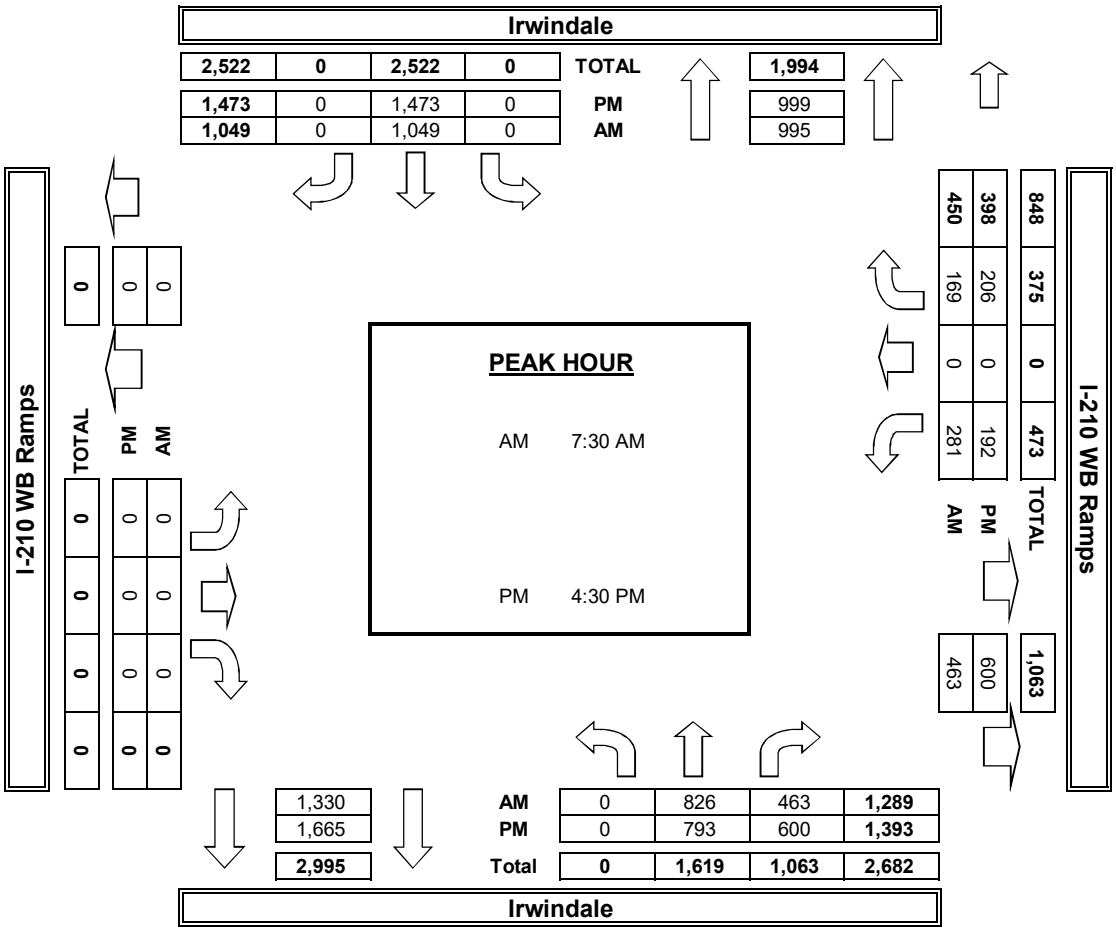

INTERSECTION TURNING MOVEMENT COUNTS

PREPARED BY: AimTD LLC. tel: 714 253 7888 cs@aimtd.com

DATE:					
Tue, Jun 5, 18	LOCATION:	Irwindale	PROJECT #:	SC1780
	NORTH & SOUTH:	Irwindale	LOCATION #:	11
	EAST & WEST:	I-210 EB Ramps	CONTROL:	SIGNAL

NOTES:

Queue PM/WB

AM / PM / MD / OTHER / OTHER — ▲ N, ◄ W, E ►, S ▼

		NORTHBOUND Irwindale			SOUTHBOUND Irwindale			EASTBOUND I-210 EB Ramps			WESTBOUND I-210 EB Ramps				U-TURNS				
	LANES:	NL X	NT 2	NR 1	SL 2	ST 2	SR X	EL 1.5	ET 0	ER 1.5	WL X	WT X	WR X	TOTAL	NB 0	SB 0	EB 0	WB 0	TTL
AM	7:00 AM	0	209	46	35	86	0	88	0	134	0	0	0	598	0	0	0	0	0
	7:15 AM	0	200	41	42	107	0	90	0	160	0	0	0	640	0	0	0	0	0
	7:30 AM	0	244	56	39	130	0	99	0	160	0	0	0	728	0	0	0	0	0
	7:45 AM	0	215	61	47	188	0	136	0	188	0	0	0	835	0	0	0	0	0
	8:00 AM	0	186	59	42	139	0	95	0	192	0	0	0	713	0	0	0	0	0
	8:15 AM	0	184	59	39	138	0	114	0	208	0	0	0	742	0	0	0	0	0
	8:30 AM	0	200	53	31	116	0	117	1	152	0	0	0	670	0	0	0	0	0
	8:45 AM	0	178	41	39	98	0	100	0	147	0	0	0	603	0	0	0	0	0
	VOLUMES	0	1,616	416	314	1,002	0	839	1	1,341	0	0	0	5,529	0	0	0	0	0
	APPROACH %	0%	80%	20%	24%	76%	0%	38%	0%	61%	0%	0%	0%						
	APP/DEPART	2,032	/	2,455	1,316	/	2,343	2,181	/	731	0	/	0	0					
	BEGIN PEAK HR		7:30 AM																
	VOLUMES	0	829	235	167	595	0	444	0	748	0	0	0	3,018					
	APPROACH %	0%	78%	22%	22%	78%	0%	37%	0%	63%	0%	0%	0%						
	PEAK HR FACTOR		0.887			0.811			0.920			0.000		0.904					
	APP/DEPART	1,064	/	1,273	762	/	1,343	1,192	/	402	0	/	0	0					
PM	4:00 PM	0	231	90	80	188	0	81	0	104	0	0	0	774	0	0	0	0	0
	4:15 PM	0	216	64	80	174	0	86	0	111	0	0	0	731	0	0	0	0	0
	4:30 PM	0	287	88	101	178	0	85	2	108	0	0	0	849	0	0	0	0	0
	4:45 PM	0	252	75	104	195	0	91	2	114	0	0	0	833	0	0	0	0	0
	5:00 PM	0	267	108	111	222	0	103	1	117	0	0	0	929	0	0	0	0	0
	5:15 PM	0	228	65	100	197	0	96	2	117	0	0	0	805	0	0	0	0	0
	5:30 PM	0	224	73	98	194	0	88	1	124	0	0	0	802	0	0	0	0	0
	5:45 PM	0	219	54	109	169	0	81	1	131	0	0	0	764	0	0	0	0	0
	VOLUMES	0	1,924	617	783	1,517	0	711	9	926	0	0	0	6,487	0	0	0	0	0
	APPROACH %	0%	76%	24%	34%	66%	0%	43%	1%	56%	0%	0%	0%						
	APP/DEPART	2,541	/	2,635	2,300	/	2,443	1,646	/	1,409	0	/	0	0					
	BEGIN PEAK HR		4:30 PM																
	VOLUMES	0	1,034	336	416	792	0	375	7	456	0	0	0	3,416					
	APPROACH %	0%	75%	25%	34%	66%	0%	45%	1%	54%	0%	0%	0%						
	PEAK HR FACTOR		0.913			0.907			0.948			0.000		0.919					
	APP/DEPART	1,370	/	1,409	1,208	/	1,248	838	/	759	0	/	0	0					

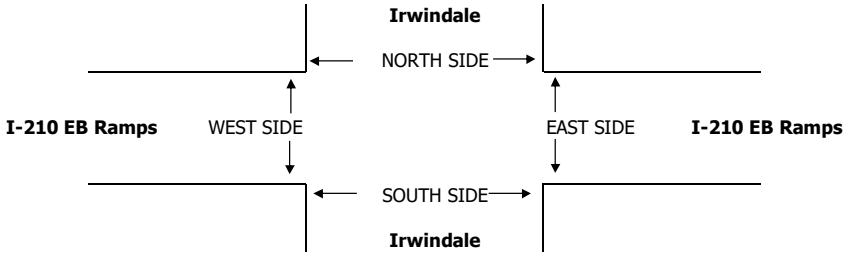

		PEDESTRIAN + BIKE CROSSINGS					PEDESTRIAN CROSSINGS					BICYCLE CROSSINGS				
		N SIDE	S SIDE	E SIDE	W SIDE	TOTAL	N SIDE	S SIDE	E SIDE	W SIDE	TOTAL	NS	SS	ES	WS	TOTAL
AM	7:00 AM	0	0	0	0	0	0	0	0	0	0	0	0	0	0	0
	7:15 AM	0	0	0	0	0	0	0	0	0	0	0	0	0	0	0
	7:30 AM	0	0	0	0	0	0	0	0	0	0	0	0	0	0	0
	7:45 AM	0	0	0	0	0	0	0	0	0	0	0	0	0	0	0
	8:00 AM	0	0	0	0	0	0	0	0	0	0	0	0	0	0	0
	8:15 AM	0	0	0	0	0	0	0	0	0	0	0	0	0	0	0
	8:30 AM	0	0	0	0	0	0	0	0	0	0	0	0	0	0	0
	8:45 AM	0	0	0	0	0	0	0	0	0	0	0	0	0	0	0
	TOTAL	0	0	0	0	0	0	0	0	0	0	0	0	0	0	0
	AM BEGIN PEAK HR	7:30 AM					0	0	0	0	0					
PM	4:00 PM	0	0	0	0	0	0	0	0	0	0	0	0	0	0	0
	4:15 PM	0	0	0	0	0	0	0	0	0	0	0	0	0	0	0
	4:30 PM	0	0	0	0	0	0	0	0	0	0	0	0	0	0	0
	4:45 PM	0	0	0	0	0	0	0	0	0	0	0	0	0	0	0
	5:00 PM	0	0	0	0	0	0	0	0	0	0	0	0	0	0	0
	5:15 PM	0	0	0	0	0	0	0	0	0	0	0	0	0	0	0
	5:30 PM	0	0	0	0	0	0	0	0	0	0	0	0	0	0	0
	5:45 PM	0	0	0	0	0	0	0	0	0	0	0	0	0	0	0
	TOTAL	0	0	0	0	0	0	0	0	0	0	0	0	0	0	0
	PM BEGIN PEAK HR	4:30 PM					0	0	0	0	0					

AimTD LLC

TURNING MOVEMENT COUNTS

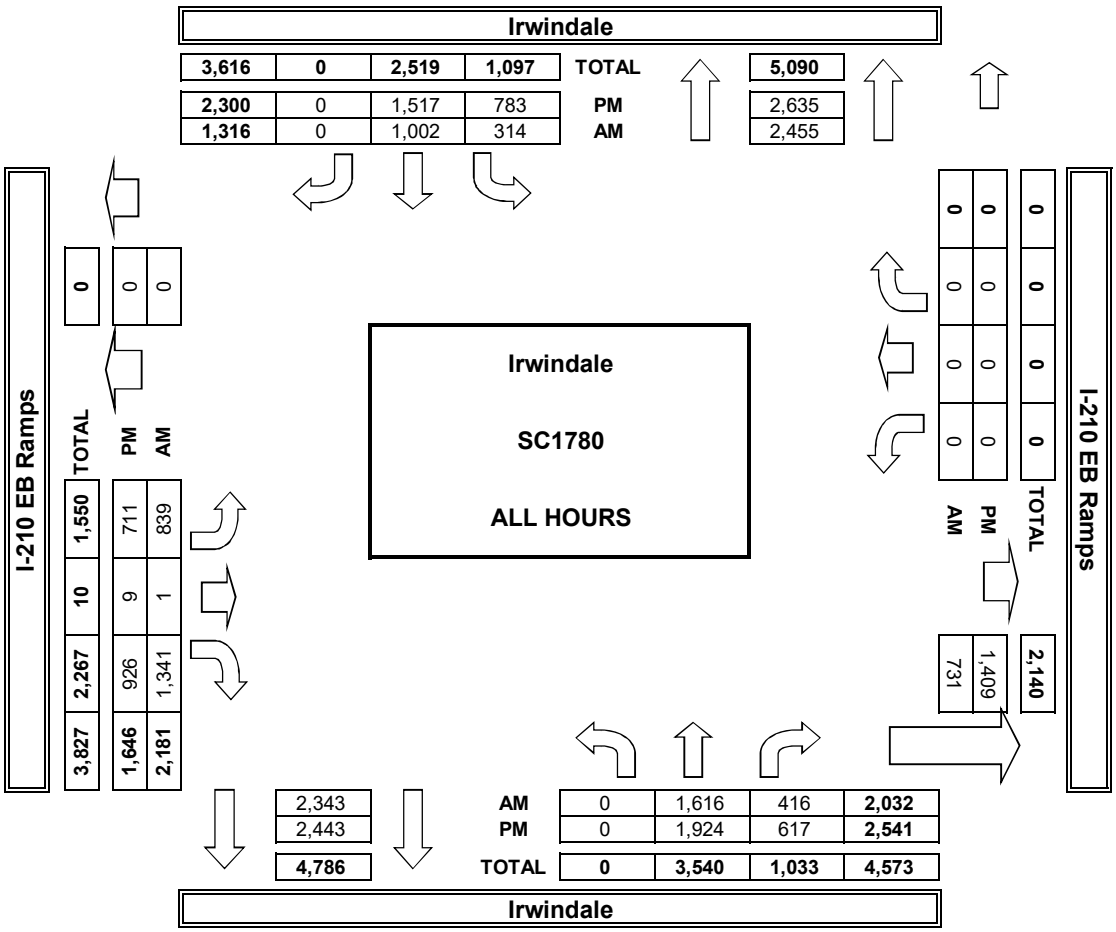

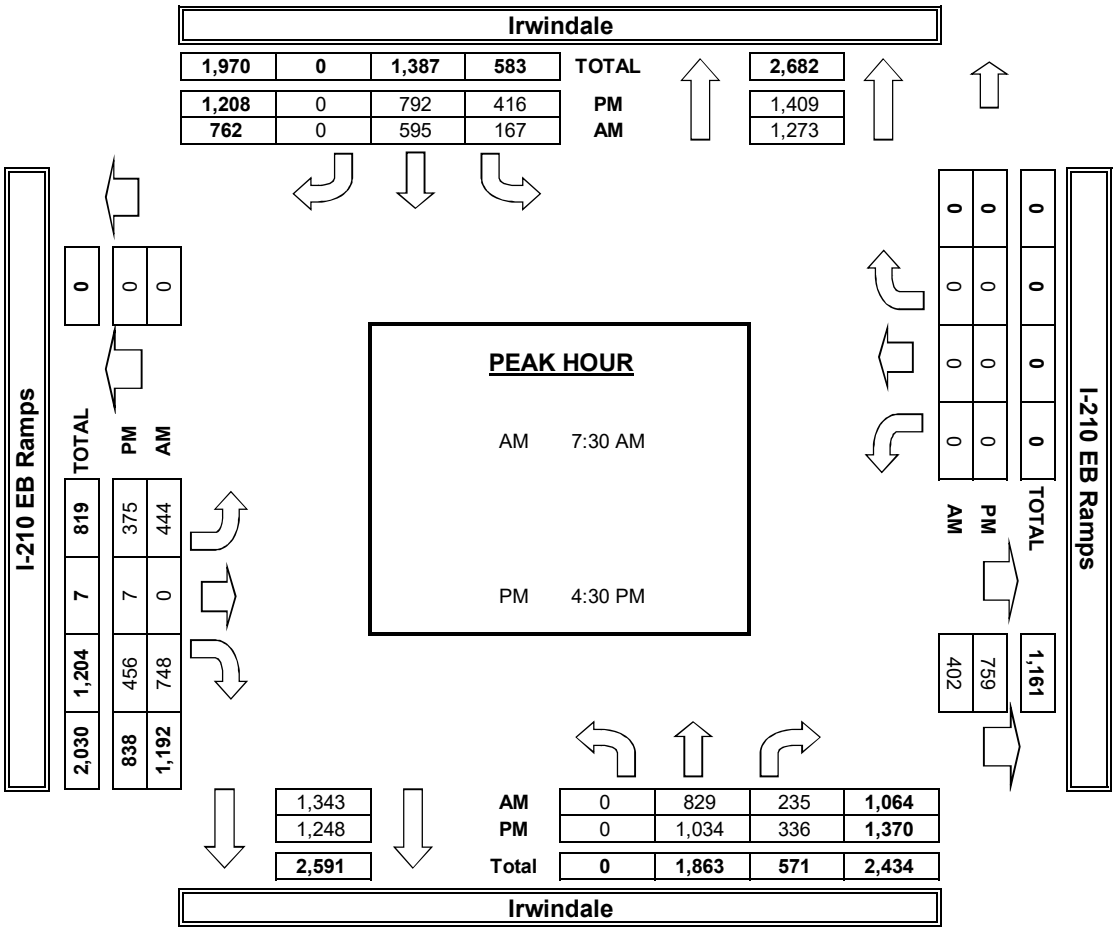

INTERSECTION TURNING MOVEMENT COUNTS

PREPARED BY: AimTD LLC. tel: 714 253 7888 cs@aimtd.com

DATE: Tue, Jun 5, 18

LOCATION: Irwindale
NORTH & SOUTH: Irwindale
EAST & WEST: Jardine de Rosa

PROJECT #: SC1780
LOCATION #: 12
CONTROL: SIGNAL

NOTES:

AM / PM / MD / OTHER / OTHER — ▲ N ◄ W E ► S ▼

		NORTHBOUND Irwindale			SOUTHBOUND Irwindale			EASTBOUND Jardine de Rosa			WESTBOUND Jardine de Rosa				U-TURNS				
	LANES:	NL 1	NT 2	NR 1	SL 1	ST 2	SR 1	EL 0.5	ET X	ER 0.5	WL 0.5	WT X	WR 0.5	TOTAL	NB 0	SB 0	EB 0	WB 0	TTL
AM	7:00 AM	19	249	32	22	189	7	2	0	5	4	0	4	533	0	0	0	0	0
	7:15 AM	24	231	32	25	228	12	1	0	6	6	0	7	572	1	0	0	0	1
	7:30 AM	24	292	40	34	248	7	1	0	3	3	0	7	659	0	0	0	0	0
	7:45 AM	15	258	38	52	308	16	3	0	5	7	0	13	715	1	0	0	0	1
	8:00 AM	11	233	13	39	283	9	2	0	3	4	0	9	606	0	0	0	0	0
	8:15 AM	3	232	24	43	294	9	4	0	2	10	0	6	627	0	0	0	0	0
	8:30 AM	5	240	17	31	229	8	2	0	4	7	0	11	554	0	0	0	0	0
	8:45 AM	2	200	13	42	196	6	2	0	4	10	0	17	492	0	0	0	0	0
	VOLUMES	103	1,935	209	288	1,975	74	17	0	32	51	0	74	4,758	2	0	0	0	2
	APPROACH %	5%	86%	9%	12%	85%	3%	35%	0%	65%	41%	0%	59%						
	APP/DEPART	2,247	/	2,026	2,337	/	2,060	49	/	497	125	/	175	0					
	BEGIN PEAK HR		7:30 AM																
	VOLUMES	53	1,015	115	168	1,133	41	10	0	13	24	0	35	2,607					
	APPROACH %	4%	86%	10%	13%	84%	3%	43%	0%	57%	41%	0%	59%						
	PEAK HR FACTOR		0.831			0.892			0.719			0.738		0.912					
	APP/DEPART	1,183	/	1,060	1,342	/	1,171	23	/	283	59	/	93	0					
PM	4:00 PM	2	274	10	6	283	3	6	0	20	20	0	39	663	2	1	0	0	3
	4:15 PM	1	263	9	12	269	3	1	0	9	10	0	15	592	1	0	0	0	1
	4:30 PM	9	316	13	13	273	0	4	0	16	33	0	54	731	4	0	0	0	4
	4:45 PM	4	287	6	9	298	1	6	0	4	17	0	33	665	3	0	0	0	3
	5:00 PM	14	302	14	11	324	4	8	0	33	46	0	64	820	10	0	0	0	10
	5:15 PM	1	258	9	2	310	2	7	0	27	17	0	27	660	1	0	0	0	1
	5:30 PM	4	251	9	6	307	4	13	0	19	21	0	31	665	3	1	0	0	4
	5:45 PM	5	246	9	8	289	3	3	0	16	7	0	23	609	4	0	0	0	4
	VOLUMES	40	2,197	79	67	2,353	20	48	0	144	171	0	286	5,405	28	2	0	0	30
	APPROACH %	2%	95%	3%	3%	96%	1%	25%	0%	75%	37%	0%	63%						
	APP/DEPART	2,316	/	2,533	2,440	/	2,696	192	/	144	457	/	32	0					
	BEGIN PEAK HR		4:30 PM																
	VOLUMES	28	1,163	42	35	1,205	7	25	0	80	113	0	178	2,876					
	APPROACH %	2%	94%	3%	3%	97%	1%	24%	0%	76%	39%	0%	61%						
	PEAK HR FACTOR		0.912			0.920			0.640			0.661		0.877					
	APP/DEPART	1,233	/	1,366	1,247	/	1,416	105	/	77	291	/	17	0					

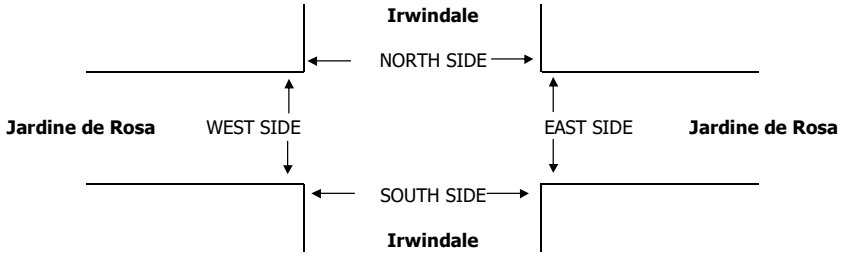

		PEDESTRIAN + BIKE CROSSINGS					PEDESTRIAN CROSSINGS					BICYCLE CROSSINGS				
		N SIDE	S SIDE	E SIDE	W SIDE	TOTAL	N SIDE	S SIDE	E SIDE	W SIDE	TOTAL	NS	SS	ES	WS	TOTAL
AM	7:00 AM	0	0	0	0	0	0	0	0	0	0	0	0	0	0	0
	7:15 AM	0	0	0	0	0	0	0	0	0	0	0	0	0	0	0
	7:30 AM	0	0	0	0	0	0	0	0	0	0	0	0	0	0	0
	7:45 AM	0	0	0	0	0	0	0	0	0	0	0	0	0	0	0
	8:00 AM	0	0	0	0	0	0	0	0	0	0	0	0	0	0	0
	8:15 AM	0	0	0	0	0	0	0	0	0	0	0	0	0	0	0
	8:30 AM	0	0	0	0	0	0	0	0	0	0	0	0	0	0	0
	8:45 AM	0	0	0	0	0	0	0	0	0	0	0	0	0	0	0
	TOTAL	0	0	0	0	0	0	0	0	0	0	0	0	0	0	0
	AM BEGIN PEAK HR	7:30 AM					0	0	0	0	0					
PM	4:00 PM	0	0	0	0	0	0	0	0	0	0	0	0	0	0	0
	4:15 PM	0	0	0	0	0	0	0	0	0	0	0	0	0	0	0
	4:30 PM	0	0	0	0	0	0	0	0	0	0	0	0	0	0	0
	4:45 PM	0	0	0	0	0	0	0	0	0	0	0	0	0	0	0
	5:00 PM	0	0	0	0	0	0	0	0	0	0	0	0	0	0	0
	5:15 PM	0	0	0	0	0	0	0	0	0	0	0	0	0	0	0
	5:30 PM	0	0	0	0	0	0	0	0	0	0	0	0	0	0	0
	5:45 PM	0	0	0	0	0	0	0	0	0	0	0	0	0	0	0
	TOTAL	0	0	0	0	0	0	0	0	0	0	0	0	0	0	0
	PM BEGIN PEAK HR	4:30 PM					0	0	0	0	0					

AimTD LLC

TURNING MOVEMENT COUNTS

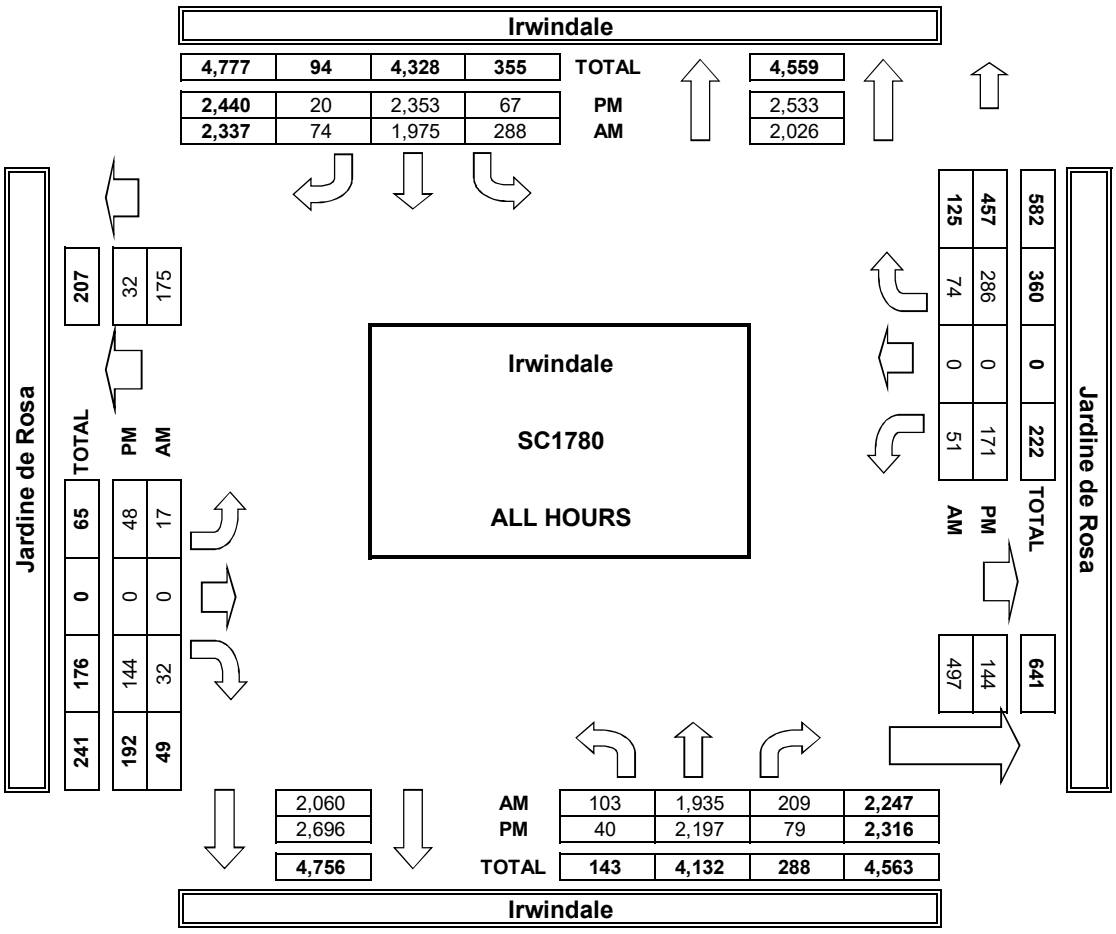

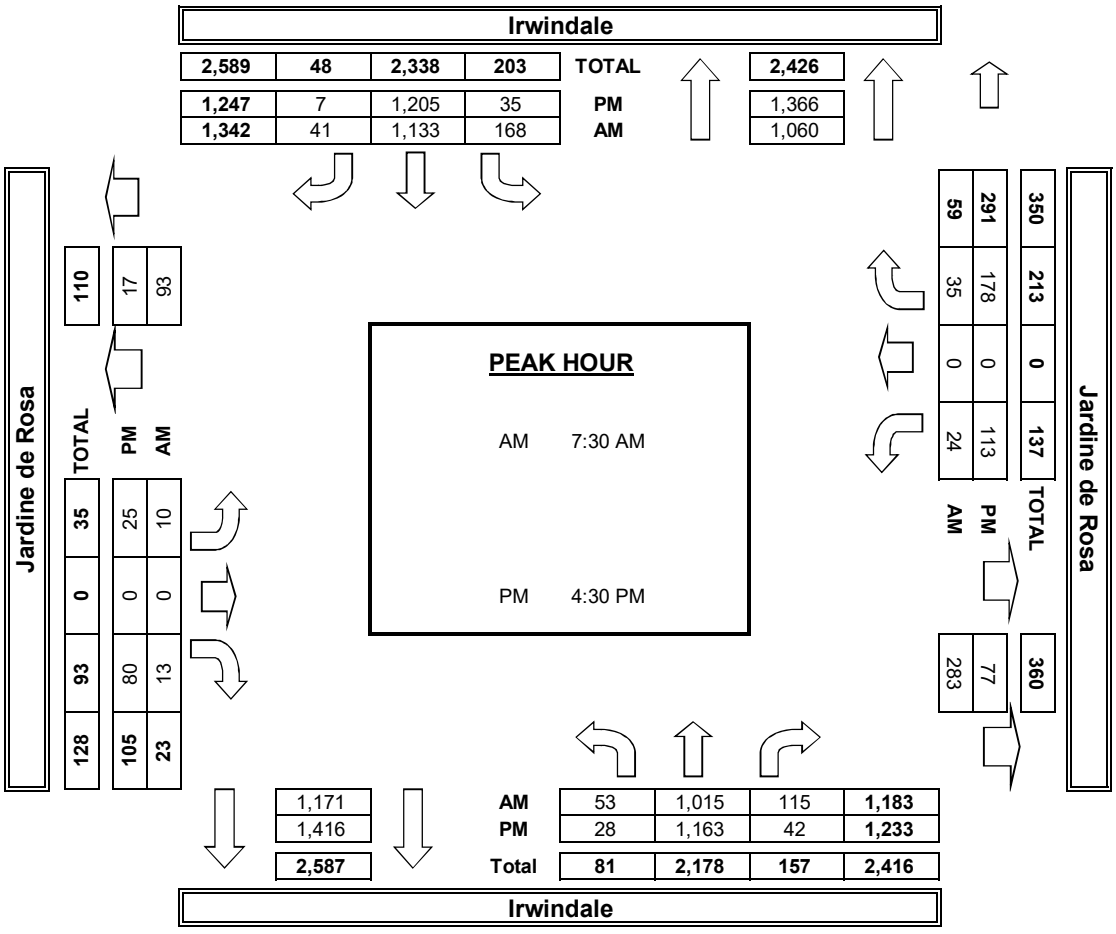

INTERSECTION TURNING MOVEMENT COUNTS

PREPARED BY: AimTD LLC. tel: 714 253 7888 cs@aimtd.com

DATE: Tue, Jun 5, 18

LOCATION: Irwindale
NORTH & SOUTH: Irwindale
EAST & WEST: 1st

PROJECT #: SC1780
LOCATION #: 13
CONTROL: SIGNAL

NOTES:

AM / PM / MD / OTHER / OTHER — ▲ N ◄ W E ► S ▼

		NORTHBOUND Irwindale			SOUTHBOUND Irwindale			EASTBOUND 1st			WESTBOUND 1st				U-TURNS				
	LANES:	NL 1	NT 2	NR 0	SL 1	ST 3	SR 1	EL 1.5	ET 0.5	ER 1	WL 1	WT 1	WR 1	TOTAL	NB 0	SB 0	EB 0	WB 0	TTL
AM	7:00 AM	8	285	1	0	133	40	23	0	5	1	0	2	498	0	0	0	0	0
	7:15 AM	6	292	2	4	172	29	11	0	2	0	0	1	519	0	2	0	0	2
	7:30 AM	14	355	0	0	187	32	17	0	4	0	0	3	612	0	0	0	0	0
	7:45 AM	10	320	2	5	207	31	15	0	1	0	0	1	592	0	1	0	0	1
	8:00 AM	8	248	0	5	205	33	11	0	8	0	0	1	519	0	1	0	0	1
	8:15 AM	6	264	2	4	228	34	11	0	8	0	0	3	560	0	2	0	0	2
	8:30 AM	10	246	2	4	203	25	21	0	5	1	0	0	517	0	2	0	0	2
	8:45 AM	11	225	2	6	154	25	20	0	4	1	0	1	449	0	3	0	0	3
	VOLUMES	73	2,235	11	28	1,489	249	129	0	37	3	0	12	4,266	0	11	0	0	11
	APPROACH %	3%	96%	0%	2%	84%	14%	78%	0%	22%	20%	0%	80%						
	APP/DEPART	2,319	/	2,387	1,766	/	1,529	166	/	28	15	/	322	0					
	BEGIN PEAK HR		7:30 AM																
	VOLUMES	38	1,187	4	14	827	130	54	0	21	0	0	8	2,283					
	APPROACH %	3%	97%	0%	1%	85%	13%	72%	0%	28%	0%	0%	100%						
	PEAK HR FACTOR		0.833			0.913			0.893			0.667		0.933					
	APP/DEPART	1,229	/	1,253	971	/	848	75	/	14	8	/	168	0					
PM	4:00 PM	6	218	1	0	318	6	45	1	18	2	0	3	618	0	0	0	0	0
	4:15 PM	3	199	3	1	300	12	27	0	7	3	0	1	556	0	1	0	0	1
	4:30 PM	4	238	3	2	290	13	54	0	13	1	0	1	619	0	0	0	0	0
	4:45 PM	4	206	0	3	319	14	44	0	10	3	0	1	604	0	1	0	0	1
	5:00 PM	3	238	0	2	365	13	39	0	6	4	0	1	671	0	0	0	0	0
	5:15 PM	0	196	1	2	363	13	30	0	14	2	0	3	624	0	1	0	0	1
	5:30 PM	0	216	1	0	326	15	35	0	11	1	0	0	605	0	0	0	0	0
	5:45 PM	1	204	1	1	329	5	17	0	5	1	0	4	568	0	0	0	0	0
	VOLUMES	21	1,715	10	11	2,610	91	291	1	84	17	0	14	4,865	0	3	0	0	3
	APPROACH %	1%	98%	1%	0%	96%	3%	77%	0%	22%	55%	0%	45%						
	APP/DEPART	1,746	/	2,023	2,712	/	2,711	376	/	19	31	/	112	0					
	BEGIN PEAK HR		4:30 PM																
	VOLUMES	11	878	4	9	1,337	53	167	0	43	10	0	6	2,518					
	APPROACH %	1%	98%	0%	1%	96%	4%	80%	0%	20%	63%	0%	38%						
	PEAK HR FACTOR		0.911			0.920			0.784			0.800		0.938					
	APP/DEPART	893	/	1,053	1,399	/	1,390	210	/	11	16	/	64	0					

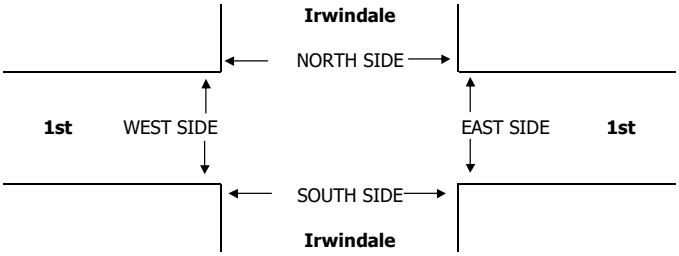

		PEDESTRIAN + BIKE CROSSINGS					PEDESTRIAN CROSSINGS					BICYCLE CROSSINGS				
		N SIDE	S SIDE	E SIDE	W SIDE	TOTAL	N SIDE	S SIDE	E SIDE	W SIDE	TOTAL	NS	SS	ES	WS	TOTAL
AM	7:00 AM	0	0	0	0	0	0	0	0	0	0	0	0	0	0	0
	7:15 AM	0	0	0	0	0	0	0	0	0	0	0	0	0	0	0
	7:30 AM	0	0	0	0	0	0	0	0	0	0	0	0	0	0	0
	7:45 AM	0	0	0	0	0	0	0	0	0	0	0	0	0	0	0
	8:00 AM	0	0	0	0	0	0	0	0	0	0	0	0	0	0	0
	8:15 AM	0	0	0	0	0	0	0	0	0	0	0	0	0	0	0
	8:30 AM	0	0	0	0	0	0	0	0	0	0	0	0	0	0	0
	8:45 AM	0	0	0	0	0	0	0	0	0	0	0	0	0	0	0
	TOTAL	0	0	0	0	0	0	0	0	0	0	0	0	0	0	0
	AM BEGIN PEAK HR	7:30 AM					0	0	0	0	0					
PM	4:00 PM	0	0	0	0	0	0	0	0	0	0	0	0	0	0	0
	4:15 PM	0	0	0	0	0	0	0	0	0	0	0	0	0	0	0
	4:30 PM	0	0	0	0	0	0	0	0	0	0	0	0	0	0	0
	4:45 PM	0	0	0	0	0	0	0	0	0	0	0	0	0	0	0
	5:00 PM	0	0	0	0	0	0	0	0	0	0	0	0	0	0	0
	5:15 PM	0	0	0	0	0	0	0	0	0	0	0	0	0	0	0
	5:30 PM	0	0	0	0	0	0	0	0	0	0	0	0	0	0	0
	5:45 PM	0	0	0	0	0	0	0	0	0	0	0	0	0	0	0
	TOTAL	0	0	0	0	0	0	0	0	0	0	0	0	0	0	0
	PM BEGIN PEAK HR	4:30 PM					0	0	0	0	0					

AimTD LLC

TURNING MOVEMENT COUNTS

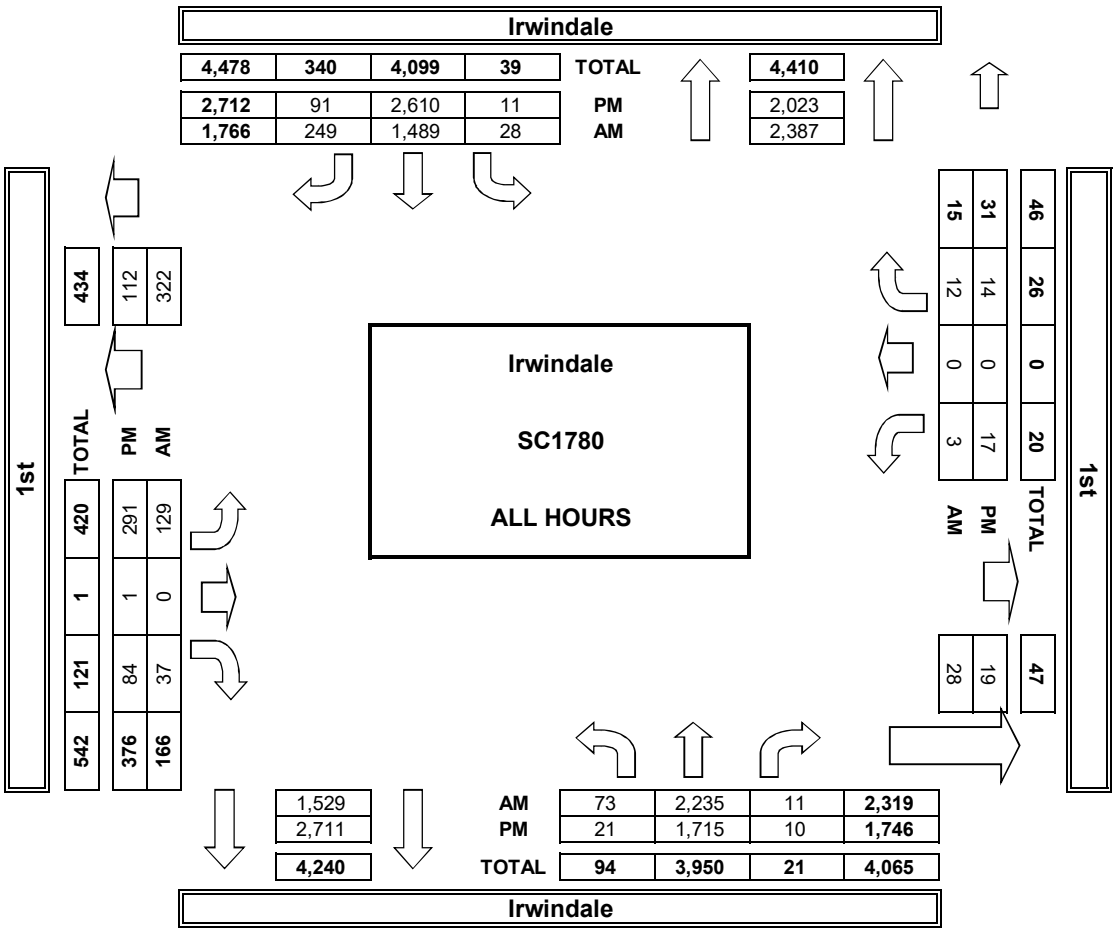

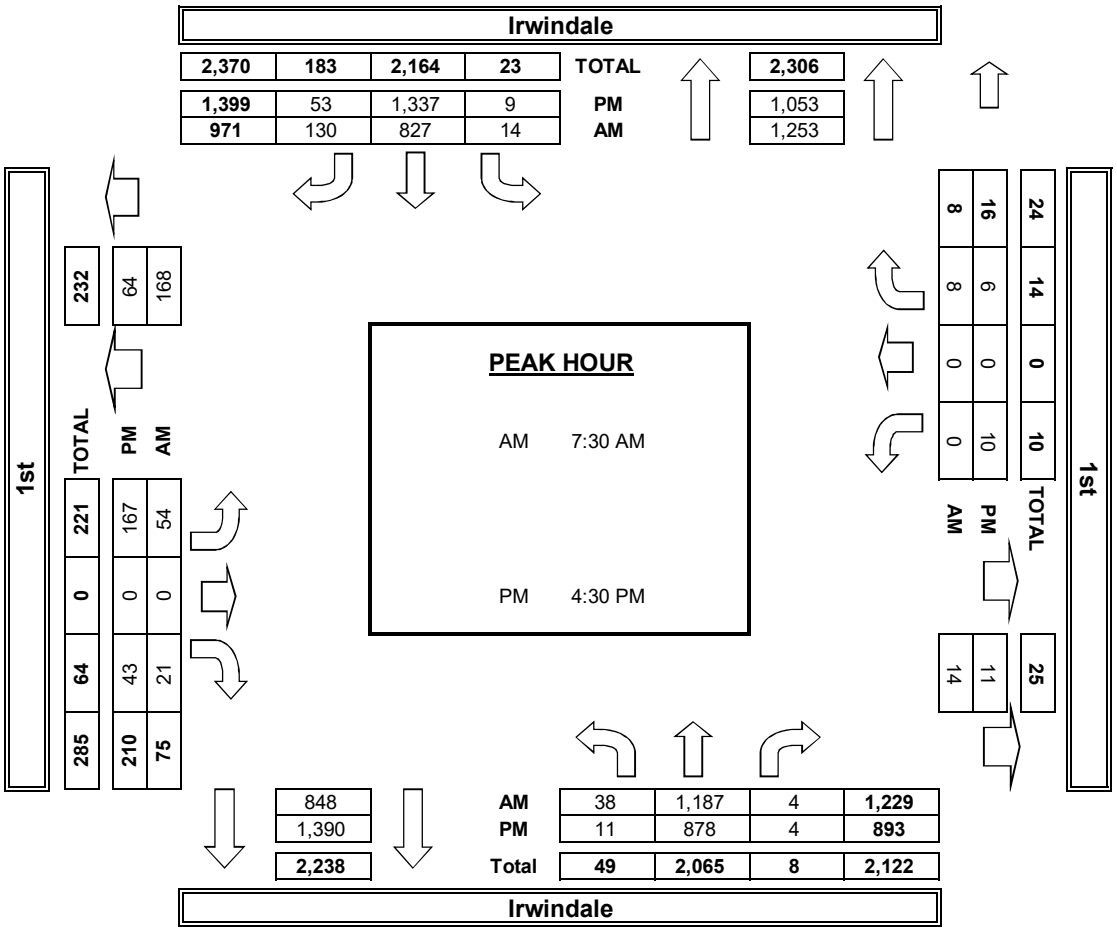

Counts Unlimited
PO Box 1178
Corona, CA 92878
(951) 268-6268

City of Irwindale
N/S: Irwindale Avenue
E/W: West Gladstone Street
Weather: Clear

File Name : 14_IRW_Irwindale Ave_Gladstone AM
Site Code : 05117366
Start Date : 5/31/2017
Page No : 1

Groups Printed- Passenger Vehicles - Large 2 Axle Vehicles - 3 Axle Vehicles - 4+ Axle Trucks

	Irwindale Avenue Southbound					West Gladstone Street Westbound					Irwindale Avenue Northbound					West Gladstone Street Eastbound							
Start Time	Left	Thru	Right	RTOR	App. Total	Left	Thru	Right	RTOR	App. Total	Left	Thru	Right	RTOR	App. Total	Left	Thru	Right	RTOR	App. Total	Exclu. Total	Inclu. Total	Int. Total
07:00 AM	30	116	1	0	147	116	19	248	84	383	5	150	14	10	169	1	5	7	4	13	98	712	810
07:15 AM	27	108	3	0	138	122	16	158	64	296	0	141	12	10	153	0	3	5	2	8	76	595	671
07:30 AM	31	137	1	0	169	115	15	140	66	270	1	178	16	8	195	0	1	4	2	5	76	639	715
07:45 AM	47	190	1	0	238	103	20	134	48	257	4	165	25	9	194	0	1	6	0	7	57	696	753
Total	135	551	6	0	692	456	70	680	262	1206	10	634	67	37	711	1	10	22	8	33	307	2642	2949
08:00 AM	50	188	2	0	240	88	12	124	37	224	2	183	29	14	214	0	1	2	0	3	51	681	732
08:15 AM	53	171	3	0	227	65	6	90	43	161	1	175	16	8	192	1	0	4	2	5	53	585	638
08:30 AM	43	178	0	0	221	76	5	101	45	182	2	163	13	5	178	0	2	1	0	3	50	584	634
08:45 AM	39	153	0	0	192	63	4	82	47	149	3	135	18	4	156	3	0	2	1	5	52	502	554
Total	185	690	5	0	880	292	27	397	172	716	8	656	76	31	740	4	3	9	3	16	206	2352	2558
Grand Total	320	1241	11	0	1572	748	97	1077	434	1922	18	1290	143	68	1451	5	13	31	11	49	513	4994	5507
Apprch %	20.4	78.9	0.7			38.9	5	56			1.2	88.9	9.9			10.2	26.5	63.3					
Total %	6.4	24.8	0.2		31.5	15	1.9	21.6		38.5	0.4	25.8	2.9		29.1	0.1	0.3	0.6		1	9.3	90.7	
Passenger Vehicles	172	1116	8		1296	688	94	911		2055	18	1174	133		1388	4	11	27		52	0	0	4791
% Passenger Vehicles	53.8	89.9	72.7	0	82.4	92	96.9	84.6	83.4	87.2	100	91	93	92.6	91.4	80	84.6	87.1	90.9	86.7	0	0	87
Large 2 Axle Vehicles	15	67	1		83	27	1	31		75	0	81	5		89	0	0	3		3	0	0	250
% Large 2 Axle Vehicles	4.7	5.4	9.1	0	5.3	3.6	1	2.9	3.7	3.2	0	6.3	3.5	4.4	5.9	0	0	9.7	0	5	0	0	4.5
3 Axle Vehicles	61	16	0		77	8	1	61		102	0	12	4		17	0	1	0		1	0	0	197
% 3 Axle Vehicles	19.1	1.3	0	0	4.9	1.1	1	5.7	7.4	4.3	0	0.9	2.8	1.5	1.1	0	7.7	0	0	1.7	0	0	3.6
4+ Axle Trucks	72	42	2		116	25	1	74		124	0	23	1		25	1	1	1		4	0	0	269
% 4+ Axle Trucks	22.5	3.4	18.2	0	7.4	3.3	1	6.9	5.5	5.3	0	1.8	0.7	1.5	1.6	20	7.7	3.2	9.1	6.7	0	0	4.9

	Irwindale Avenue Southbound				West Gladstone Street Westbound				Irwindale Avenue Northbound				West Gladstone Street Eastbound				
Start Time	Left	Thru	Right	App. Total	Left	Thru	Right	App. Total	Left	Thru	Right	App. Total	Left	Thru	Right	App. Total	Int. Total
Peak Hour Analysis From 07:00 AM to 08:45 AM - Peak 1 of 1																	
Peak Hour for Entire Intersection Begins at 07:00 AM																	
07:00 AM	30	116	1	147	116	19	**248**	**383**	**5**	150	14	169	**1**	**5**	**7**	**13**	**712**
07:15 AM	27	108	**3**	138	**122**	16	158	296	0	141	12	153	0	3	5	8	595
07:30 AM	31	137	1	169	115	15	140	270	1	**178**	16	**195**	0	1	4	5	639
07:45 AM	**47**	**190**	1	**238**	103	**20**	134	257	4	165	**25**	194	0	1	6	7	696
Total Volume	135	551	6	692	456	70	680	1206	10	634	67	711	1	10	22	33	2642
% App. Total	19.5	79.6	0.9		37.8	5.8	56.4		1.4	89.2	9.4		3	30.3	66.7		
PHF	.718	.725	.500	.727	.934	.875	.685	.787	.500	.890	.670	.912	.250	.500	.786	.635	.928

Counts Unlimited
PO Box 1178
Corona, CA 92878
(951) 268-6268

City of Irwindale
N/S: Irwindale Avenue
E/W: West Gladstone Street
Weather: Clear

File Name : 14_IRW_Irwindale Ave_Gladstone AM
Site Code : 05117366
Start Date : 5/31/2017
Page No : 2

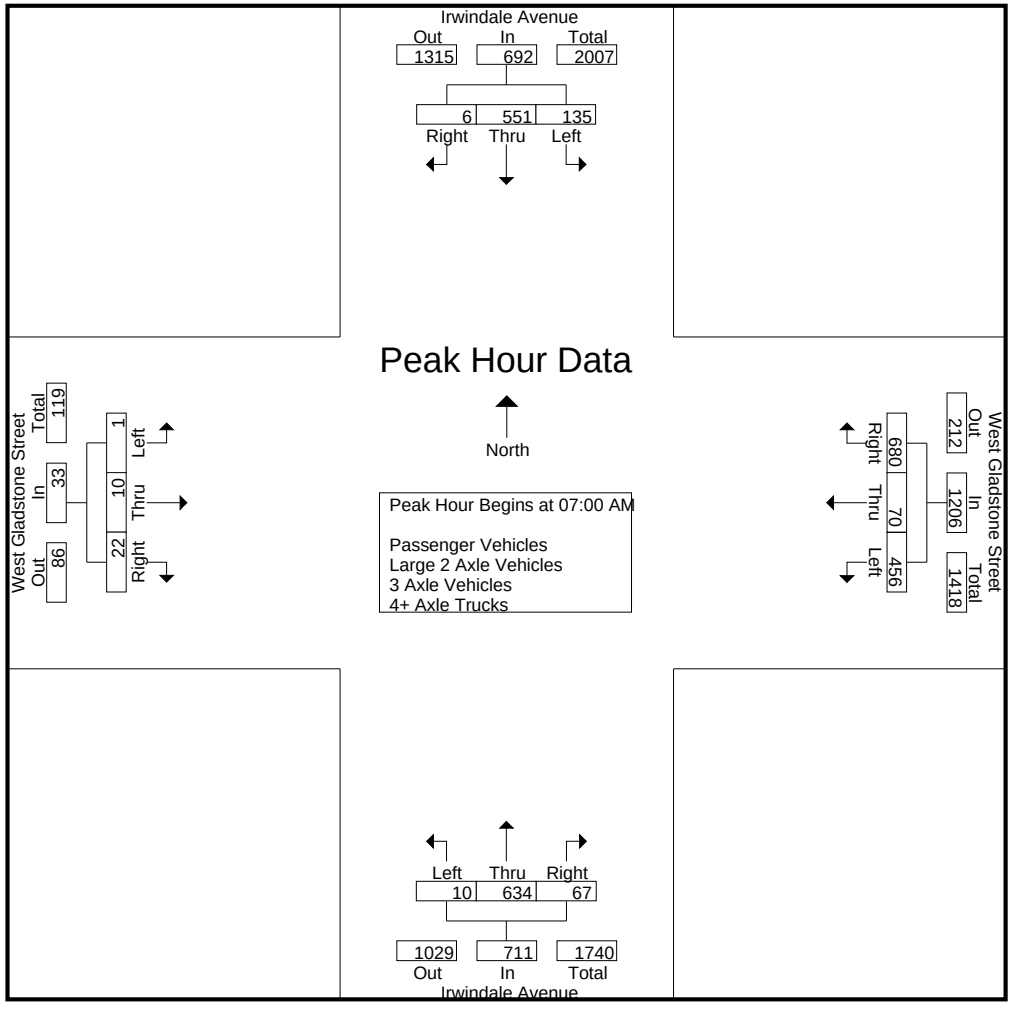

Counts Unlimited
PO Box 1178
Corona, CA 92878
(951) 268-6268

City of Irwindale
N/S: Irwindale Avenue
E/W: West Gladstone Street
Weather: Clear

File Name : 14_IRW_Irwindale Ave_Gladstone AM
Site Code : 05117366
Start Date : 5/31/2017
Page No : 3

	Irwindale Avenue Southbound				West Gladstone Street Westbound				Irwindale Avenue Northbound				West Gladstone Street Eastbound				
Start Time	Left	Thru	Right	App. Total	Left	Thru	Right	App. Total	Left	Thru	Right	App. Total	Left	Thru	Right	App. Total	Int. Total
Peak Hour Analysis From 07:00 AM to 08:45 AM - Peak 1 of 1																	
Peak Hour for Each Approach Begins at:																	
	07:45 AM				07:00 AM				07:30 AM				07:00 AM				
+0 mins.	47	**190**	1	238	116	19	**248**	**383**	1	178	16	195	**1**	**5**	**7**	**13**	
+15 mins.	50	188	2	**240**	**122**	16	158	296	**4**	165	25	194	0	3	5	8	
+30 mins.	**53**	171	**3**	227	115	15	140	270	2	**183**	**29**	**214**	0	1	4	5	
+45 mins.	43	178	0	221	103	**20**	134	257	1	175	16	192	0	1	6	7	
Total Volume	193	727	6	926	456	70	680	1206	8	701	86	795	1	10	22	33	
% App. Total	20.8	78.5	0.6		37.8	5.8	56.4		1	88.2	10.8		3	30.3	66.7		
PHF	.910	.957	.500	.965	.934	.875	.685	.787	.500	.958	.741	.929	.250	.500	.786	.635	

Counts Unlimited
PO Box 1178
Corona, CA 92878
(951) 268-6268

City of Irwindale
N/S: Irwindale Avenue
E/W: West Gladstone Street
Weather: Clear

File Name : 14_IRW_Irwindale Ave_Gladstone AM
Site Code : 05117366
Start Date : 5/31/2017
Page No : 1

Groups Printed- Passenger Vehicles

	Irwindale Avenue Southbound					West Gladstone Street Westbound					Irwindale Avenue Northbound					West Gladstone Street Eastbound							
Start Time	Left	Thru	Right	RTOR	App. Total	Left	Thru	Right	RTOR	App. Total	Left	Thru	Right	RTOR	App. Total	Left	Thru	Right	RTOR	App. Total	Exclu. Total	Inclu. Total	Int. Total
07:00 AM	22	108	1	0	131	111	18	235	81	364	5	134	13	9	152	1	4	7	4	12	94	659	753
07:15 AM	16	94	1	0	111	111	15	141	56	267	0	122	11	10	133	0	2	5	2	7	68	518	586
07:30 AM	19	122	1	0	142	111	15	115	55	241	1	160	15	7	176	0	1	4	2	5	64	564	628
07:45 AM	29	169	1	0	199	97	19	119	44	235	4	154	23	9	181	0	1	3	0	4	53	619	672
Total	86	493	4	0	583	430	67	610	236	1107	10	570	62	35	642	1	8	19	8	28	279	2360	2639
08:00 AM	22	170	2	0	194	81	12	105	26	198	2	170	28	13	200	0	1	2	0	3	39	595	634
08:15 AM	23	157	2	0	182	55	6	65	36	126	1	160	16	8	177	1	0	4	2	5	46	490	536
08:30 AM	24	154	0	0	178	68	5	74	32	147	2	149	11	3	162	0	2	1	0	3	35	490	525
08:45 AM	17	142	0	0	159	54	4	57	32	115	3	125	16	4	144	2	0	1	0	3	36	421	457
Total	86	623	4	0	713	258	27	301	126	586	8	604	71	28	683	3	3	8	2	14	156	1996	2152
Grand Total	172	1116	8	0	1296	688	94	911	362	1693	18	1174	133	63	1325	4	11	27	10	42	435	4356	4791
Apprch %	13.3	86.1	0.6			40.6	5.6	53.8			1.4	88.6	10			9.5	26.2	64.3					
Total %	3.9	25.6	0.2		29.8	15.8	2.2	20.9		38.9	0.4	27	3.1		30.4	0.1	0.3	0.6		1	9.1	90.9	

	Irwindale Avenue Southbound				West Gladstone Street Westbound				Irwindale Avenue Northbound				West Gladstone Street Eastbound				
Start Time	Left	Thru	Right	App. Total	Left	Thru	Right	App. Total	Left	Thru	Right	App. Total	Left	Thru	Right	App. Total	Int. Total
Peak Hour Analysis From 07:00 AM to 07:45 AM - Peak 1 of 1																	
Peak Hour for Entire Intersection Begins at 07:00 AM																	
07:00 AM	22	108	**1**	131	**111**	18	**235**	**364**	**5**	134	13	152	**1**	**4**	**7**	**12**	**659**
07:15 AM	16	94	1	111	111	15	141	267	0	122	11	133	0	2	5	7	518
07:30 AM	19	122	1	142	111	15	115	241	1	**160**	15	176	0	1	4	5	564
07:45 AM	**29**	**169**	1	**199**	97	**19**	119	235	4	154	**23**	**181**	0	1	3	4	619
Total Volume	86	493	4	583	430	67	610	1107	10	570	62	642	1	8	19	28	2360
% App. Total	14.8	84.6	0.7		38.8	6.1	55.1		1.6	88.8	9.7		3.6	28.6	67.9		
PHF	.741	.729	1.00	.732	.968	.882	.649	.760	.500	.891	.674	.887	.250	.500	.679	.583	.895

Counts Unlimited
PO Box 1178
Corona, CA 92878
(951) 268-6268

City of Irwindale
N/S: Irwindale Avenue
E/W: West Gladstone Street
Weather: Clear

File Name : 14_IRW_Irwindale Ave_Gladstone AM
Site Code : 05117366
Start Date : 5/31/2017
Page No : 2

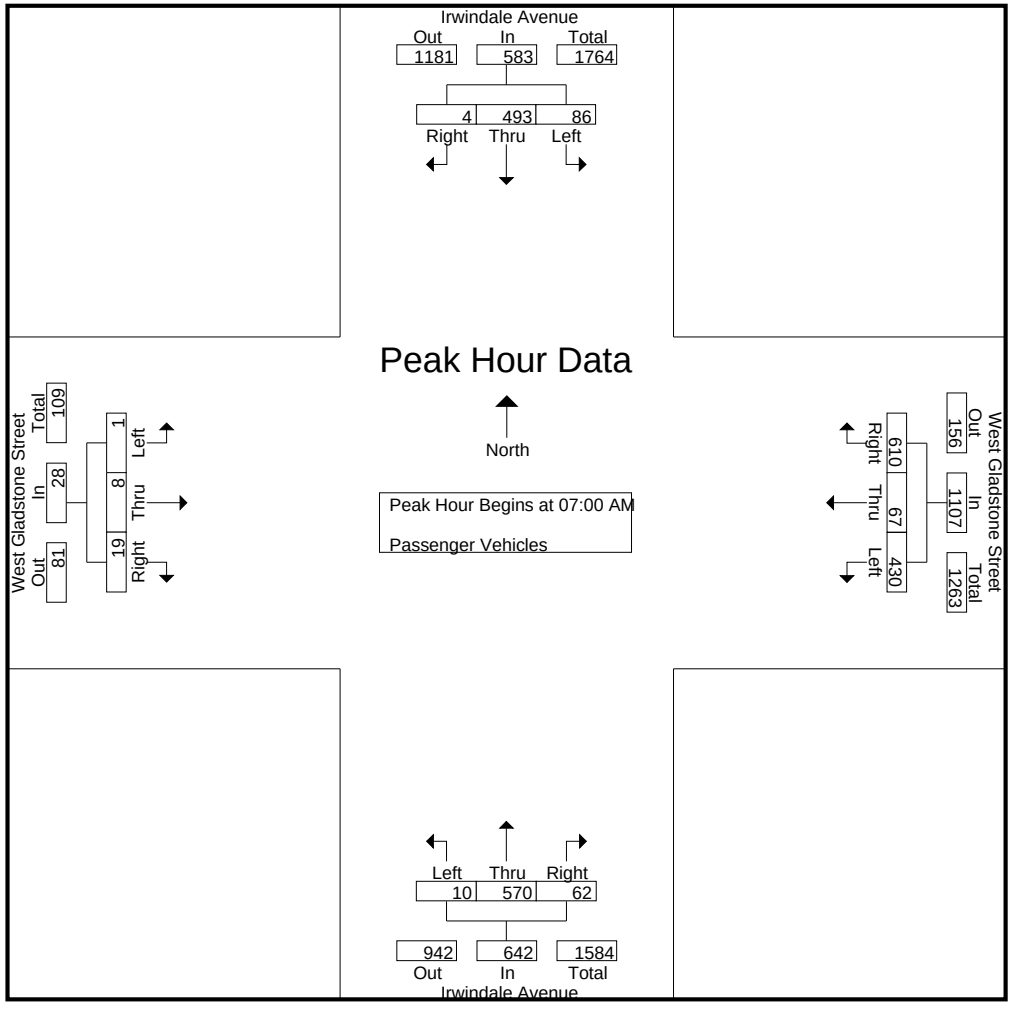

Counts Unlimited
PO Box 1178
Corona, CA 92878
(951) 268-6268

City of Irwindale
N/S: Irwindale Avenue
E/W: West Gladstone Street
Weather: Clear

File Name : 14_IRW_Irwindale Ave_Gladstone AM
Site Code : 05117366
Start Date : 5/31/2017
Page No : 3

	Irwindale Avenue Southbound				West Gladstone Street Westbound				Irwindale Avenue Northbound				West Gladstone Street Eastbound				
Start Time	Left	Thru	Right	App. Total	Left	Thru	Right	App. Total	Left	Thru	Right	App. Total	Left	Thru	Right	App. Total	Int. Total
Peak Hour Analysis From 07:00 AM to 07:45 AM - Peak 1 of 1																	
Peak Hour for Each Approach Begins at:																	
	07:00 AM				07:00 AM				07:00 AM				07:00 AM				
+0 mins.	22	108	**1**	131	**111**	18	**235**	**364**	**5**	134	13	152	**1**	**4**	**7**	**12**	
+15 mins.	16	94	1	111	111	15	141	267	0	122	11	133	0	2	5	7	
+30 mins.	19	122	1	142	111	15	115	241	1	**160**	15	176	0	1	4	5	
+45 mins.	**29**	**169**	1	**199**	97	**19**	119	235	4	154	**23**	**181**	0	1	3	4	
Total Volume	86	493	4	583	430	67	610	1107	10	570	62	642	1	8	19	28	
% App. Total	14.8	84.6	0.7		38.8	6.1	55.1		1.6	88.8	9.7		3.6	28.6	67.9		
PHF	.741	.729	1.000	.732	.968	.882	.649	.760	.500	.891	.674	.887	.250	.500	.679	.583	

Counts Unlimited
PO Box 1178
Corona, CA 92878
(951) 268-6268

City of Irwindale
N/S: Irwindale Avenue
E/W: West Gladstone Street
Weather: Clear

File Name : 14_IRW_Irwindale Ave_Gladstone AM
Site Code : 05117366
Start Date : 5/31/2017
Page No : 1

Groups Printed- Large 2 Axle Vehicles

	Irwindale Avenue Southbound					West Gladstone Street Westbound					Irwindale Avenue Northbound					West Gladstone Street Eastbound							
Start Time	Left	Thru	Right	RTOR	App. Total	Left	Thru	Right	RTOR	App. Total	Left	Thru	Right	RTOR	App. Total	Left	Thru	Right	RTOR	App. Total	Exclu. Total	Inclu. Total	Int. Total
07:00 AM	2	5	0	0	7	3	0	5	1	8	0	12	0	0	12	0	0	0	0	0	1	27	28
07:15 AM	2	6	1	0	9	6	1	4	2	11	0	13	0	0	13	0	0	0	0	0	2	33	35
07:30 AM	1	7	0	0	8	3	0	5	4	8	0	11	1	1	12	0	0	0	0	0	5	28	33
07:45 AM	0	12	0	0	12	3	0	2	1	5	0	9	1	0	10	0	0	3	0	3	1	30	31
Total	5	30	1	0	36	15	1	16	8	32	0	45	2	1	47	0	0	3	0	3	9	118	127
08:00 AM	4	10	0	0	14	1	0	1	1	2	0	8	0	0	8	0	0	0	0	0	1	24	25
08:15 AM	3	8	0	0	11	5	0	2	1	7	0	12	0	0	12	0	0	0	0	0	1	30	31
08:30 AM	0	13	0	0	13	4	0	5	1	9	0	9	2	2	11	0	0	0	0	0	3	33	36
08:45 AM	3	6	0	0	9	2	0	7	5	9	0	7	1	0	8	0	0	0	0	0	5	26	31
Total	10	37	0	0	47	12	0	15	8	27	0	36	3	2	39	0	0	0	0	0	10	113	123
Grand Total	15	67	1	0	83	27	1	31	16	59	0	81	5	3	86	0	0	3	0	3	19	231	250
Apprch %	18.1	80.7	1.2			45.8	1.7	52.5			0	94.2	5.8			0	0	100					
Total %	6.5	29	0.4		35.9	11.7	0.4	13.4		25.5	0	35.1	2.2		37.2	0	0	1.3		1.3	7.6	92.4	

	Irwindale Avenue Southbound				West Gladstone Street Westbound				Irwindale Avenue Northbound				West Gladstone Street Eastbound				
Start Time	Left	Thru	Right	App. Total	Left	Thru	Right	App. Total	Left	Thru	Right	App. Total	Left	Thru	Right	App. Total	Int. Total
Peak Hour Analysis From 07:00 AM to 07:45 AM - Peak 1 of 1																	
Peak Hour for Entire Intersection Begins at 07:00 AM																	
07:00 AM	**2**	5	0	7	3	0	**5**	8	0	12	0	12	0	0	0	0	27
07:15 AM	2	6	**1**	9	**6**	**1**	4	**11**	0	**13**	0	**13**	0	0	0	0	**33**
07:30 AM	1	7	0	8	3	0	5	8	0	11	**1**	12	0	0	0	0	28
07:45 AM	0	**12**	0	**12**	3	0	2	5	0	9	1	10	0	0	**3**	**3**	30
Total Volume	5	30	1	36	15	1	16	32	0	45	2	47	0	0	3	3	118
% App. Total	13.9	83.3	2.8		46.9	3.1	50		0	95.7	4.3		0	0	100		
PHF	.625	.625	.250	.750	.625	.250	.800	.727	.000	.865	.500	.904	.000	.000	.250	.250	.894

Counts Unlimited
PO Box 1178
Corona, CA 92878
(951) 268-6268

City of Irwindale
N/S: Irwindale Avenue
E/W: West Gladstone Street
Weather: Clear

File Name : 14_IRW_Irwindale Ave_Gladstone AM
Site Code : 05117366
Start Date : 5/31/2017
Page No : 2

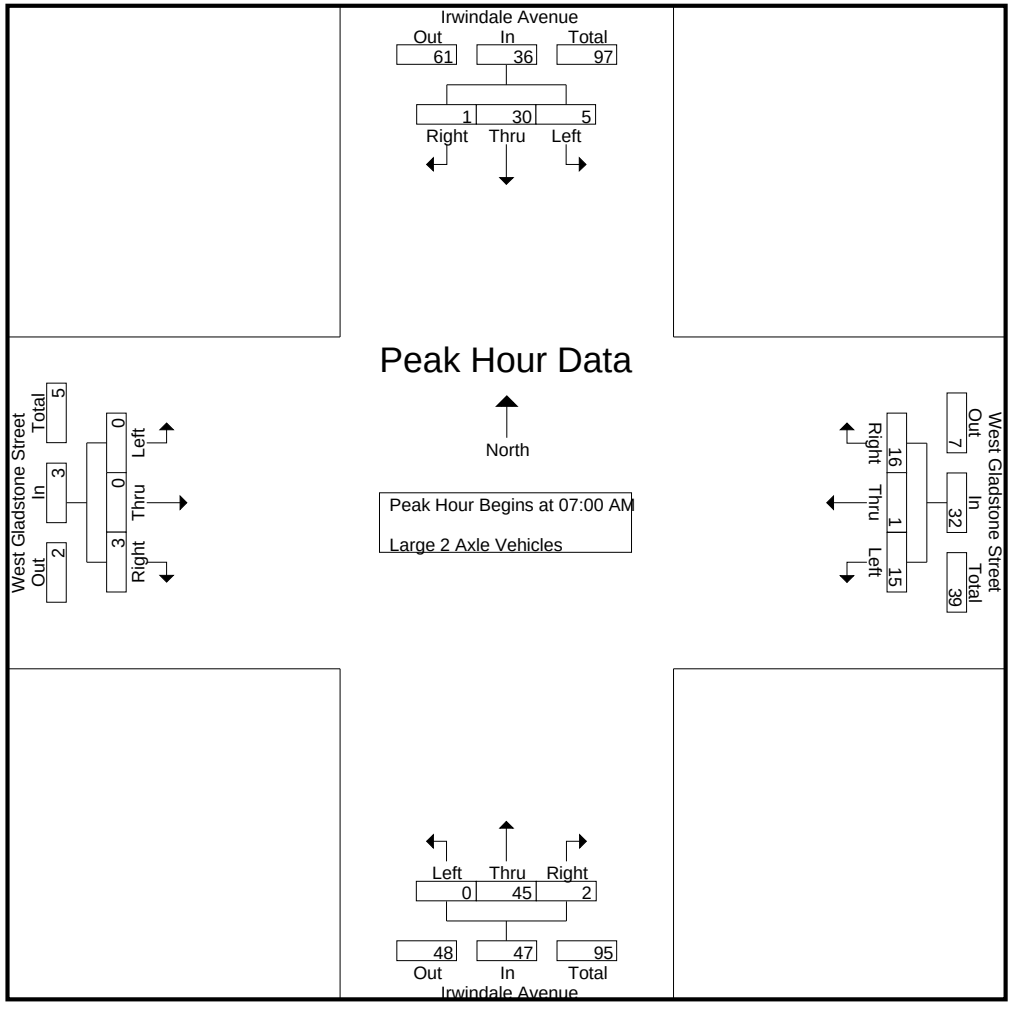

Counts Unlimited
PO Box 1178
Corona, CA 92878
(951) 268-6268

City of Irwindale
N/S: Irwindale Avenue
E/W: West Gladstone Street
Weather: Clear

File Name : 14_IRW_Irwindale Ave_Gladstone AM
Site Code : 05117366
Start Date : 5/31/2017
Page No : 3

	Irwindale Avenue Southbound				West Gladstone Street Westbound				Irwindale Avenue Northbound				West Gladstone Street Eastbound				
Start Time	Left	Thru	Right	App. Total	Left	Thru	Right	App. Total	Left	Thru	Right	App. Total	Left	Thru	Right	App. Total	Int. Total
Peak Hour Analysis From 07:00 AM to 07:45 AM - Peak 1 of 1																	
Peak Hour for Each Approach Begins at:																	
	07:00 AM				07:00 AM				07:00 AM				07:00 AM				
+0 mins.	**2**	5	0	7	3	0	**5**	8	0	12	0	12	0	0	0	0	
+15 mins.	2	6	**1**	9	**6**	**1**	4	**11**	0	**13**	0	**13**	0	0	0	0	
+30 mins.	1	7	0	8	3	0	5	8	0	11	**1**	12	0	0	0	0	
+45 mins.	0	**12**	0	**12**	3	0	2	5	0	9	1	10	0	0	**3**	**3**	
Total Volume	5	30	1	36	15	1	16	32	0	45	2	47	0	0	3	3	
% App. Total	13.9	83.3	2.8		46.9	3.1	50		0	95.7	4.3		0	0	100		
PHF	.625	.625	.250	.750	.625	.250	.800	.727	.000	.865	.500	.904	.000	.000	.250	.250	

Counts Unlimited
PO Box 1178
Corona, CA 92878
(951) 268-6268

City of Irwindale
N/S: Irwindale Avenue
E/W: West Gladstone Street
Weather: Clear

File Name : 14_IRW_Irwindale Ave_Gladstone AM
Site Code : 05117366
Start Date : 5/31/2017
Page No : 1

Groups Printed- 3 Axle Vehicles

	Irwindale Avenue Southbound					West Gladstone Street Westbound					Irwindale Avenue Northbound					West Gladstone Street Eastbound							
Start Time	Left	Thru	Right	RTOR	App. Total	Left	Thru	Right	RTOR	App. Total	Left	Thru	Right	RTOR	App. Total	Left	Thru	Right	RTOR	App. Total	Exclu. Total	Inclu. Total	Int. Total
07:00 AM	2	1	0	0	3	1	0	2	1	3	0	1	0	0	1	0	1	0	0	1	1	8	9
07:15 AM	3	3	0	0	6	1	0	3	2	4	0	3	1	0	4	0	0	0	0	0	2	14	16
07:30 AM	3	2	0	0	5	0	0	4	3	4	0	4	0	0	4	0	0	0	0	0	3	13	16
07:45 AM	11	2	0	0	13	0	1	2	0	3	0	0	1	0	1	0	0	0	0	0	0	17	17
Total	19	8	0	0	27	2	1	11	6	14	0	8	2	0	10	0	1	0	0	1	6	52	58
08:00 AM	12	1	0	0	13	0	0	13	10	13	0	1	1	1	2	0	0	0	0	0	11	28	39
08:15 AM	10	1	0	0	11	1	0	15	4	16	0	0	0	0	0	0	0	0	0	0	4	27	31
08:30 AM	15	5	0	0	20	0	0	10	6	10	0	2	0	0	2	0	0	0	0	0	6	32	38
08:45 AM	5	1	0	0	6	5	0	12	6	17	0	1	1	0	2	0	0	0	0	0	6	25	31
Total	42	8	0	0	50	6	0	50	26	56	0	4	2	1	6	0	0	0	0	0	27	112	139
Grand Total	61	16	0	0	77	8	1	61	32	70	0	12	4	1	16	0	1	0	0	1	33	164	197
Apprch %	79.2	20.8	0			11.4	1.4	87.1			0	75	25			0	100	0					
Total %	37.2	9.8	0		47	4.9	0.6	37.2		42.7	0	7.3	2.4		9.8	0	0.6	0		0.6	16.8	83.2	

	Irwindale Avenue Southbound				West Gladstone Street Westbound				Irwindale Avenue Northbound				West Gladstone Street Eastbound				
Start Time	Left	Thru	Right	App. Total	Left	Thru	Right	App. Total	Left	Thru	Right	App. Total	Left	Thru	Right	App. Total	Int. Total
Peak Hour Analysis From 07:00 AM to 07:45 AM - Peak 1 of 1																	
Peak Hour for Entire Intersection Begins at 07:00 AM																	
07:00 AM	2	1	0	3	**1**	0	2	3	0	1	0	1	0	**1**	0	**1**	8
07:15 AM	3	**3**	0	6	1	0	3	**4**	0	3	**1**	**4**	0	0	0	0	14
07:30 AM	3	2	0	5	0	0	**4**	4	0	**4**	0	4	0	0	0	0	13
07:45 AM	**11**	2	0	**13**	0	**1**	2	3	0	0	1	1	0	0	0	0	**17**
Total Volume	19	8	0	27	2	1	11	14	0	8	2	10	0	1	0	1	52
% App. Total	70.4	29.6	0		14.3	7.1	78.6		0	80	20		0	100	0		
PHF	.432	.667	.000	.519	.500	.250	.688	.875	.000	.500	.500	.625	.000	.250	.000	.250	.765

Counts Unlimited
PO Box 1178
Corona, CA 92878
(951) 268-6268

City of Irwindale
N/S: Irwindale Avenue
E/W: West Gladstone Street
Weather: Clear

File Name : 14_IRW_Irwindale Ave_Gladstone AM
Site Code : 05117366
Start Date : 5/31/2017
Page No : 2

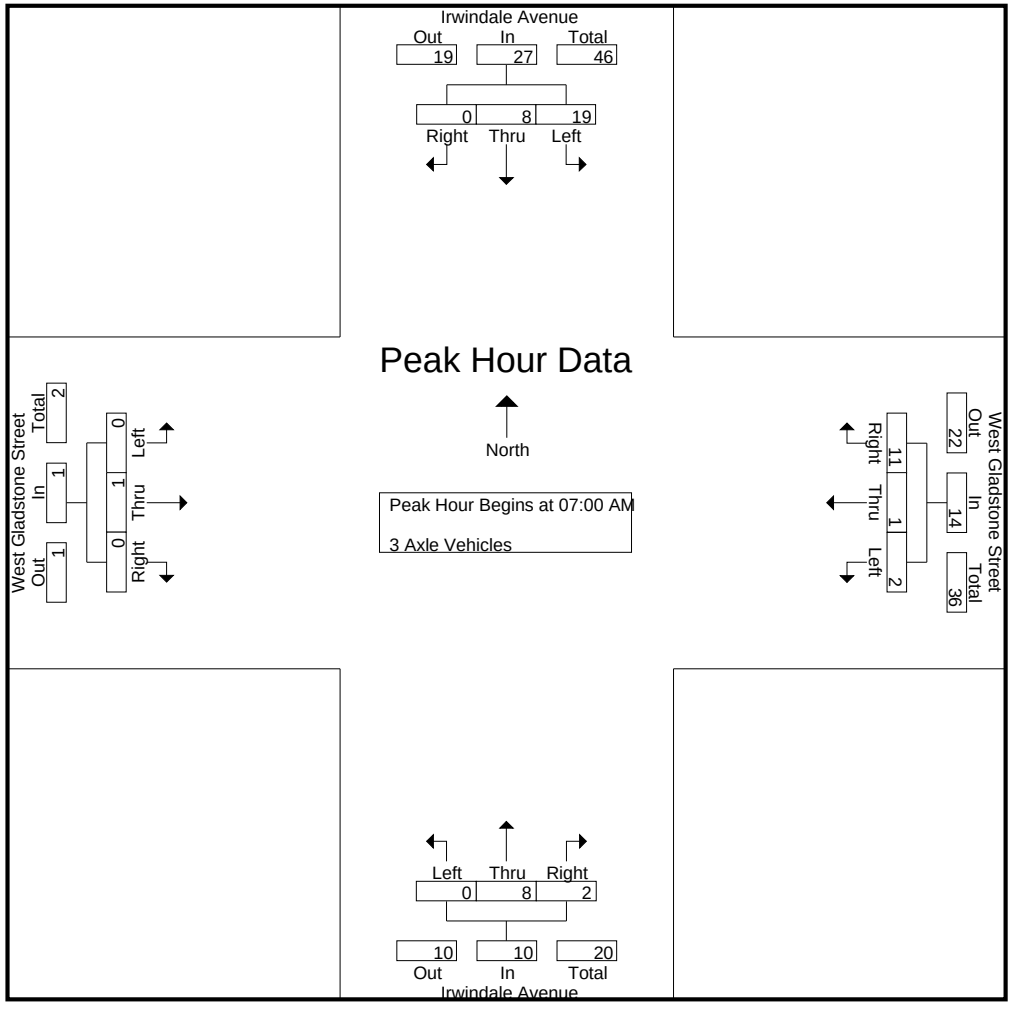

Counts Unlimited
PO Box 1178
Corona, CA 92878
(951) 268-6268

City of Irwindale
N/S: Irwindale Avenue
E/W: West Gladstone Street
Weather: Clear

File Name : 14_IRW_Irwindale Ave_Gladstone AM
Site Code : 05117366
Start Date : 5/31/2017
Page No : 3

	Irwindale Avenue Southbound				West Gladstone Street Westbound				Irwindale Avenue Northbound				West Gladstone Street Eastbound				
Start Time	Left	Thru	Right	App. Total	Left	Thru	Right	App. Total	Left	Thru	Right	App. Total	Left	Thru	Right	App. Total	Int. Total
Peak Hour Analysis From 07:00 AM to 07:45 AM - Peak 1 of 1																	
Peak Hour for Each Approach Begins at:																	
	07:00 AM				07:00 AM				07:00 AM				07:00 AM				
+0 mins.	2	1	0	3	**1**	0	2	3	0	1	0	1	0	**1**	0	**1**	
+15 mins.	3	**3**	0	6	1	0	3	**4**	0	3	**1**	**4**	0	0	0	0	
+30 mins.	3	2	0	5	0	0	**4**	4	0	**4**	0	4	0	0	0	0	
+45 mins.	**11**	2	0	**13**	0	**1**	2	3	0	0	1	1	0	0	0	0	
Total Volume	19	8	0	27	2	1	11	14	0	8	2	10	0	1	0	1	
% App. Total	70.4	29.6	0		14.3	7.1	78.6		0	80	20		0	100	0		
PHF	.432	.667	.000	.519	.500	.250	.688	.875	.000	.500	.500	.625	.000	.250	.000	.250	

Counts Unlimited
PO Box 1178
Corona, CA 92878
(951) 268-6268

City of Irwindale
N/S: Irwindale Avenue
E/W: West Gladstone Street
Weather: Clear

File Name : 14_IRW_Irwindale Ave_Gladstone AM
Site Code : 05117366
Start Date : 5/31/2017
Page No : 1

Groups Printed- 4+ Axle Trucks

	Irwindale Avenue Southbound					West Gladstone Street Westbound					Irwindale Avenue Northbound					West Gladstone Street Eastbound							
Start Time	Left	Thru	Right	RTOR	App. Total	Left	Thru	Right	RTOR	App. Total	Left	Thru	Right	RTOR	App. Total	Left	Thru	Right	RTOR	App. Total	Exclu. Total	Inclu. Total	Int. Total
07:00 AM	4	2	0	0	6	1	1	6	1	8	0	3	1	1	4	0	0	0	0	0	2	18	20
07:15 AM	6	5	1	0	12	4	0	10	4	14	0	3	0	0	3	0	1	0	0	1	4	30	34
07:30 AM	8	6	0	0	14	1	0	16	4	17	0	3	0	0	3	0	0	0	0	0	4	34	38
07:45 AM	7	7	0	0	14	3	0	11	3	14	0	2	0	0	2	0	0	0	0	0	3	30	33
Total	25	20	1	0	46	9	1	43	12	53	0	11	1	1	12	0	1	0	0	1	13	112	125
08:00 AM	12	7	0	0	19	6	0	5	0	11	0	4	0	0	4	0	0	0	0	0	0	34	34
08:15 AM	17	5	1	0	23	4	0	8	2	12	0	3	0	0	3	0	0	0	0	0	2	38	40
08:30 AM	4	6	0	0	10	4	0	12	6	16	0	3	0	0	3	0	0	0	0	0	6	29	35
08:45 AM	14	4	0	0	18	2	0	6	4	8	0	2	0	0	2	1	0	1	1	2	5	30	35
Total	47	22	1	0	70	16	0	31	12	47	0	12	0	0	12	1	0	1	1	2	13	131	144
Grand Total	72	42	2	0	116	25	1	74	24	100	0	23	1	1	24	1	1	1	1	3	26	243	269
Apprch %	62.1	36.2	1.7			25	1	74			0	95.8	4.2			33.3	33.3	33.3					
Total %	29.6	17.3	0.8		47.7	10.3	0.4	30.5		41.2	0	9.5	0.4		9.9	0.4	0.4	0.4		1.2	9.7	90.3	

	Irwindale Avenue Southbound				West Gladstone Street Westbound				Irwindale Avenue Northbound				West Gladstone Street Eastbound				
Start Time	Left	Thru	Right	App. Total	Left	Thru	Right	App. Total	Left	Thru	Right	App. Total	Left	Thru	Right	App. Total	Int. Total
Peak Hour Analysis From 07:00 AM to 07:45 AM - Peak 1 of 1																	
Peak Hour for Entire Intersection Begins at 07:00 AM																	
07:00 AM	4	2	0	6	1	**1**	6	8	0	**3**	**1**	**4**	0	0	0	0	18
07:15 AM	6	5	**1**	12	**4**	0	10	14	0	3	0	3	0	**1**	0	**1**	30
07:30 AM	**8**	6	0	**14**	1	0	**16**	**17**	0	3	0	3	0	0	0	0	**34**
07:45 AM	7	**7**	0	14	3	0	11	14	0	2	0	2	0	0	0	0	30
Total Volume	25	20	1	46	9	1	43	53	0	11	1	12	0	1	0	1	112
% App. Total	54.3	43.5	2.2		17	1.9	81.1		0	91.7	8.3		0	100	0		
PHF	.781	.714	.250	.821	.563	.250	.672	.779	.000	.917	.250	.750	.000	.250	.000	.250	.824

Counts Unlimited
PO Box 1178
Corona, CA 92878
(951) 268-6268

City of Irwindale
N/S: Irwindale Avenue
E/W: West Gladstone Street
Weather: Clear

File Name : 14_IRW_Irwindale Ave_Gladstone AM
Site Code : 05117366
Start Date : 5/31/2017
Page No : 2

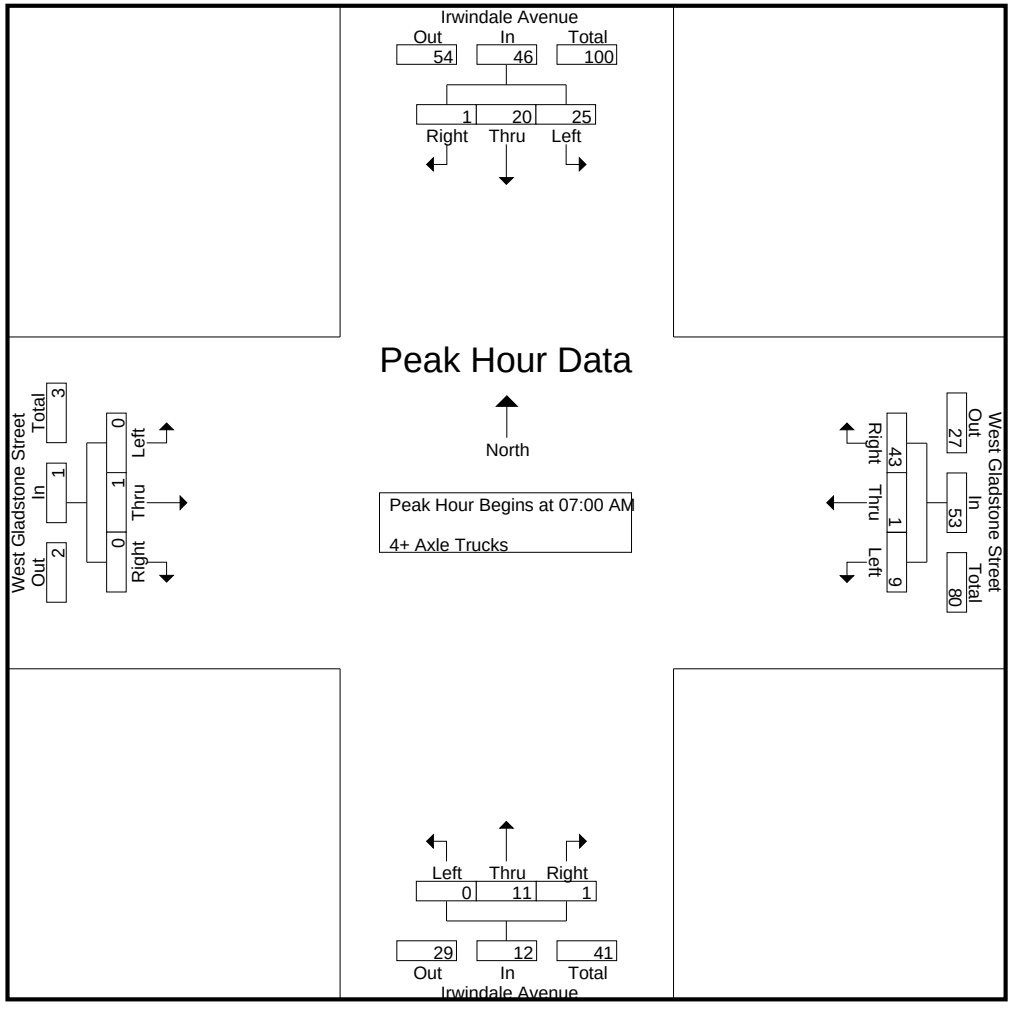

Counts Unlimited
PO Box 1178
Corona, CA 92878
(951) 268-6268

City of Irwindale
N/S: Irwindale Avenue
E/W: West Gladstone Street
Weather: Clear

File Name : 14_IRW_Irwindale Ave_Gladstone AM
Site Code : 05117366
Start Date : 5/31/2017
Page No : 3

	Irwindale Avenue Southbound				West Gladstone Street Westbound				Irwindale Avenue Northbound				West Gladstone Street Eastbound				
Start Time	Left	Thru	Right	App. Total	Left	Thru	Right	App. Total	Left	Thru	Right	App. Total	Left	Thru	Right	App. Total	Int. Total
Peak Hour Analysis From 07:00 AM to 07:45 AM - Peak 1 of 1																	
Peak Hour for Each Approach Begins at:																	
	07:00 AM				07:00 AM				07:00 AM				07:00 AM				
+0 mins.	4	2	0	6	1	**1**	6	8	0	**3**	**1**	**4**	0	0	0	0	
+15 mins.	6	5	**1**	12	**4**	0	10	14	0	3	0	3	0	**1**	0	**1**	
+30 mins.	**8**	6	0	**14**	1	0	**16**	**17**	0	3	0	3	0	0	0	0	
+45 mins.	7	**7**	0	14	3	0	11	14	0	2	0	2	0	0	0	0	
Total Volume	25	20	1	46	9	1	43	53	0	11	1	12	0	1	0	1	
% App. Total	54.3	43.5	2.2		17	1.9	81.1		0	91.7	8.3		0	100	0		
PHF	.781	.714	.250	.821	.563	.250	.672	.779	.000	.917	.250	.750	.000	.250	.000	.250	

Counts Unlimited
PO Box 1178
Corona, CA 92878
(951) 268-6268

City of Irwindale
N/S: Irwindale Avenue
E/W: West Gladstone Street
Weather: Clear

File Name : 14_IRW_Irwindale Ave_Gladstone PM
Site Code : 05117366
Start Date : 5/31/2017
Page No : 1

Groups Printed- Passenger Vehicles - Large 2 Axle Vehicles - 3 Axle Vehicles - 4+ Axle Trucks

	Irwindale Avenue Southbound					West Gladstone Street Westbound					Irwindale Avenue Northbound					West Gladstone Street Eastbound							
Start Time	Left	Thru	Right	RTOR	App. Total	Left	Thru	Right	RTOR	App. Total	Left	Thru	Right	RTOR	App. Total	Left	Thru	Right	RTOR	App. Total	Exclu. Total	Inclu. Total	Int. Total
04:00 PM	107	191	0	0	298	33	1	42	27	76	2	172	71	9	245	0	16	6	3	22	39	641	680
04:15 PM	88	222	1	0	311	44	3	54	28	101	1	162	75	19	238	3	17	11	5	31	52	681	733
04:30 PM	129	199	3	1	331	38	1	56	31	95	0	183	92	20	275	1	29	11	2	41	54	742	796
04:45 PM	142	213	1	0	356	29	1	46	31	76	0	160	69	18	229	2	20	7	3	29	52	690	742
Total	466	825	5	1	1296	144	6	198	117	348	3	677	307	66	987	6	82	35	13	123	197	2754	2951
05:00 PM	134	251	3	0	388	44	2	55	40	101	1	181	65	11	247	1	17	4	1	22	52	758	810
05:15 PM	125	226	1	0	352	39	0	50	36	89	0	163	82	12	245	1	19	5	0	25	48	711	759
05:30 PM	120	217	2	0	339	17	0	38	32	55	1	204	82	4	287	2	13	1	1	16	37	697	734
05:45 PM	126	202	0	0	328	28	7	40	28	75	0	140	61	14	201	0	12	3	0	15	42	619	661
Total	505	896	6	0	1407	128	9	183	136	320	2	688	290	41	980	4	61	13	2	78	179	2785	2964
Grand Total	971	1721	11	1	2703	272	15	381	253	668	5	1365	597	107	1967	10	143	48	15	201	376	5539	5915
Apprch %	35.9	63.7	0.4			40.7	2.2	57			0.3	69.4	30.4			5	71.1	23.9					
Total %	17.5	31.1	0.2		48.8	4.9	0.3	6.9		12.1	0.1	24.6	10.8		35.5	0.2	2.6	0.9		3.6	6.4	93.6	
Passenger Vehicles	899	1646	11		2557	249	14	346		840	4	1287	579		1975	10	140	46		210	0	0	5582
% Passenger Vehicles	92.6	95.6	100	100	94.6	91.5	93.3	90.8	91.3	91.2	80	94.3	97	98.1	95.2	100	97.9	95.8	93.3	97.2	0	0	94.4
Large 2 Axle Vehicles	42	55	0		97	6	1	8		20	1	49	12		63	0	2	1		3	0	0	183
% Large 2 Axle Vehicles	4.3	3.2	0	0	3.6	2.2	6.7	2.1	2	2.2	20	3.6	2	0.9	3	0	1.4	2.1	0	1.4	0	0	3.1
3 Axle Vehicles	23	3	0		26	11	0	9		26	0	10	3		14	0	1	1		3	0	0	69
% 3 Axle Vehicles	2.4	0.2	0	0	1	4	0	2.4	2.4	2.8	0	0.7	0.5	0.9	0.7	0	0.7	2.1	6.7	1.4	0	0	1.2
4+ Axle Trucks	7	17	0		24	6	0	18		35	0	19	3		22	0	0	0		0	0	0	81
% 4+ Axle Trucks	0.7	1	0	0	0.9	2.2	0	4.7	4.3	3.8	0	1.4	0.5	0	1.1	0	0	0	0	0	0	0	1.4

	Irwindale Avenue Southbound				West Gladstone Street Westbound				Irwindale Avenue Northbound				West Gladstone Street Eastbound				
Start Time	Left	Thru	Right	App. Total	Left	Thru	Right	App. Total	Left	Thru	Right	App. Total	Left	Thru	Right	App. Total	Int. Total
Peak Hour Analysis From 04:00 PM to 05:45 PM - Peak 1 of 1																	
Peak Hour for Entire Intersection Begins at 04:30 PM																	
04:30 PM	129	199	**3**	331	38	1	**56**	95	0	**183**	**92**	**275**	1	**29**	**11**	**41**	742
04:45 PM	**142**	213	1	356	29	1	46	76	0	160	69	229	**2**	20	7	29	690
05:00 PM	134	**251**	3	**388**	**44**	**2**	55	**101**	**1**	181	65	247	1	17	4	22	**758**
05:15 PM	125	226	1	352	39	0	50	89	0	163	82	245	1	19	5	25	711
Total Volume	530	889	8	1427	150	4	207	361	1	687	308	996	5	85	27	117	2901
% App. Total	37.1	62.3	0.6		41.6	1.1	57.3		0.1	69	30.9		4.3	72.6	23.1		
PHF	.933	.885	.667	.919	.852	.500	.924	.894	.250	.939	.837	.905	.625	.733	.614	.713	.957

Counts Unlimited
PO Box 1178
Corona, CA 92878
(951) 268-6268

City of Irwindale
N/S: Irwindale Avenue
E/W: West Gladstone Street
Weather: Clear

File Name : 14_IRW_Irwindale Ave_Gladstone PM
Site Code : 05117366
Start Date : 5/31/2017
Page No : 2

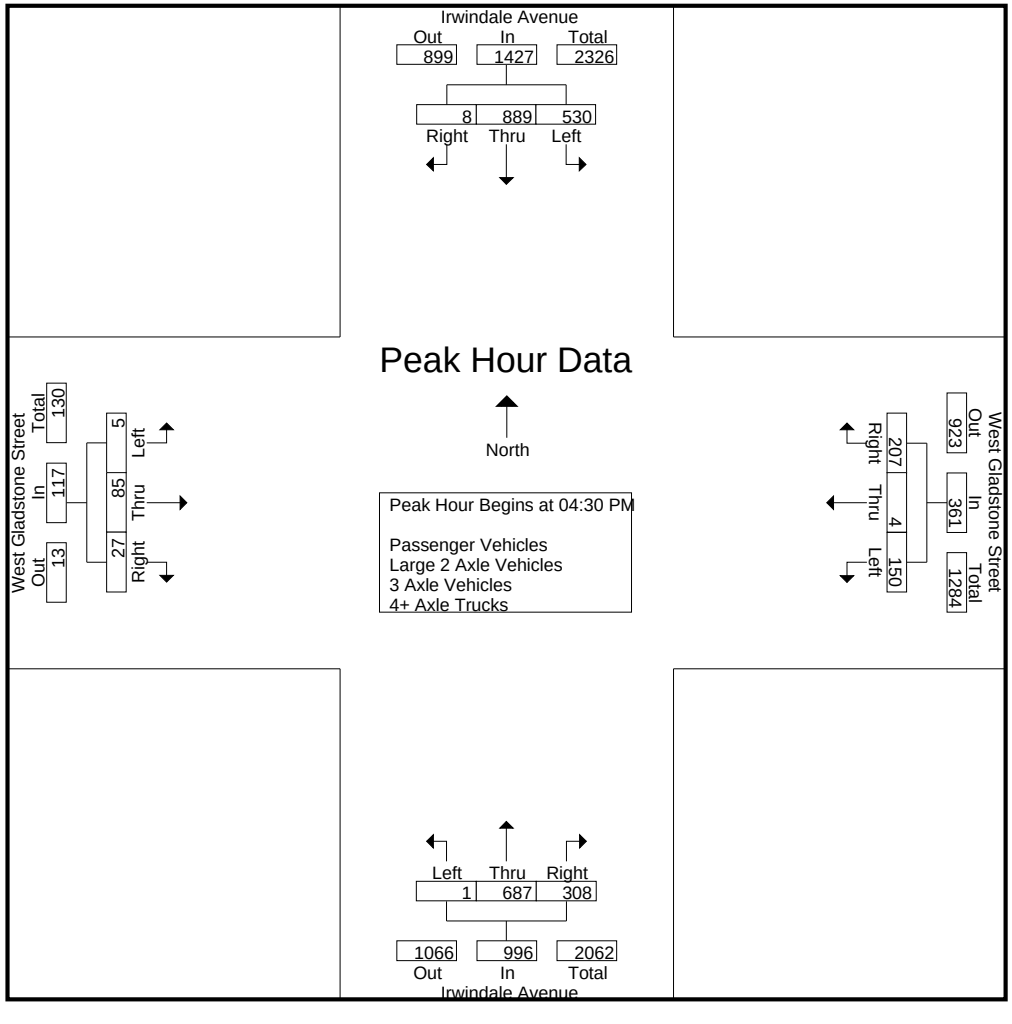

Counts Unlimited
PO Box 1178
Corona, CA 92878
(951) 268-6268

City of Irwindale
N/S: Irwindale Avenue
E/W: West Gladstone Street
Weather: Clear

File Name : 14_IRW_Irwindale Ave_Gladstone PM
Site Code : 05117366
Start Date : 5/31/2017
Page No : 3

	Irwindale Avenue Southbound				West Gladstone Street Westbound				Irwindale Avenue Northbound				West Gladstone Street Eastbound				
Start Time	Left	Thru	Right	App. Total	Left	Thru	Right	App. Total	Left	Thru	Right	App. Total	Left	Thru	Right	App. Total	Int. Total
Peak Hour Analysis From 04:00 PM to 05:45 PM - Peak 1 of 1																	
Peak Hour for Each Approach Begins at:																	
	04:45 PM				04:15 PM				04:45 PM				04:00 PM				
+0 mins.	**142**	213	1	356	**44**	**3**	54	**101**	0	160	69	229	0	16	6	22	
+15 mins.	134	**251**	**3**	**388**	38	1	**56**	95	**1**	181	65	247	**3**	17	**11**	31	
+30 mins.	125	226	1	352	29	1	46	76	0	163	**82**	245	1	**29**	11	**41**	
+45 mins.	120	217	2	339	44	2	55	101	1	**204**	82	**287**	2	20	7	29	
Total Volume	521	907	7	1435	155	7	211	373	2	708	298	1008	6	82	35	123	
% App. Total	36.3	63.2	0.5		41.6	1.9	56.6		0.2	70.2	29.6		4.9	66.7	28.5		
PHF	.917	.903	.583	.925	.881	.583	.942	.923	.500	.868	.909	.878	.500	.707	.795	.750	

Counts Unlimited
PO Box 1178
Corona, CA 92878
(951) 268-6268

City of Irwindale
N/S: Irwindale Avenue
E/W: West Gladstone Street
Weather: Clear

File Name : 14_IRW_Irwindale Ave_Gladstone PM
Site Code : 05117366
Start Date : 5/31/2017
Page No : 1

Groups Printed- Passenger Vehicles

	Irwindale Avenue Southbound					West Gladstone Street Westbound					Irwindale Avenue Northbound					West Gladstone Street Eastbound							
Start Time	Left	Thru	Right	RTOR	App. Total	Left	Thru	Right	RTOR	App. Total	Left	Thru	Right	RTOR	App. Total	Left	Thru	Right	RTOR	App. Total	Exclu. Total	Inclu. Total	Int. Total
04:00 PM	89	181	0	0	270	25	1	35	21	61	2	162	67	9	231	0	16	6	3	22	33	584	617
04:15 PM	80	207	1	0	288	41	3	48	24	92	1	148	74	19	223	3	17	10	4	30	47	633	680
04:30 PM	114	189	3	1	306	34	1	47	26	82	0	167	90	19	257	1	27	11	2	39	48	684	732
04:45 PM	132	205	1	0	338	27	1	45	31	73	0	154	68	18	222	2	19	7	3	28	52	661	713
Total	415	782	5	1	1202	127	6	175	102	308	3	631	299	65	933	6	79	34	12	119	180	2562	2742
05:00 PM	130	244	3	0	377	42	2	54	39	98	0	168	62	10	230	1	17	4	1	22	50	727	777
05:15 PM	121	216	1	0	338	37	0	46	34	83	0	159	79	12	238	1	19	5	0	25	46	684	730
05:30 PM	116	209	2	0	327	17	0	37	31	54	1	197	78	4	276	2	13	1	1	16	36	673	709
05:45 PM	117	195	0	0	312	26	6	34	25	66	0	132	61	14	193	0	12	2	0	14	39	585	624
Total	484	864	6	0	1354	122	8	171	129	301	1	656	280	40	937	4	61	12	2	77	171	2669	2840
Grand Total	899	1646	11	1	2556	249	14	346	231	609	4	1287	579	105	1870	10	140	46	14	196	351	5231	5582
Apprch %	35.2	64.4	0.4			40.9	2.3	56.8			0.2	68.8	31			5.1	71.4	23.5					
Total %	17.2	31.5	0.2		48.9	4.8	0.3	6.6		11.6	0.1	24.6	11.1		35.7	0.2	2.7	0.9		3.7	6.3	93.7	

	Irwindale Avenue Southbound				West Gladstone Street Westbound				Irwindale Avenue Northbound				West Gladstone Street Eastbound				
Start Time	Left	Thru	Right	App. Total	Left	Thru	Right	App. Total	Left	Thru	Right	App. Total	Left	Thru	Right	App. Total	Int. Total
Peak Hour Analysis From 04:30 PM to 05:15 PM - Peak 1 of 1																	
Peak Hour for Entire Intersection Begins at 04:30 PM																	
04:30 PM	114	189	**3**	306	34	1	47	82	0	167	**90**	**257**	1	**27**	**11**	**39**	684
04:45 PM	**132**	205	1	338	27	1	45	73	0	154	68	222	**2**	19	7	28	661
05:00 PM	130	**244**	3	**377**	**42**	**2**	**54**	**98**	0	**168**	62	230	1	17	4	22	**727**
05:15 PM	121	216	1	338	37	0	46	83	0	159	79	238	1	19	5	25	684
Total Volume	497	854	8	1359	140	4	192	336	0	648	299	947	5	82	27	114	2756
% App. Total	36.6	62.8	0.6		41.7	1.2	57.1		0	68.4	31.6		4.4	71.9	23.7		
PHF	.941	.875	.667	.901	.833	.500	.889	.857	.000	.964	.831	.921	.625	.759	.614	.731	.948

Counts Unlimited
PO Box 1178
Corona, CA 92878
(951) 268-6268

City of Irwindale
N/S: Irwindale Avenue
E/W: West Gladstone Street
Weather: Clear

File Name : 14_IRW_Irwindale Ave_Gladstone PM
Site Code : 05117366
Start Date : 5/31/2017
Page No : 2

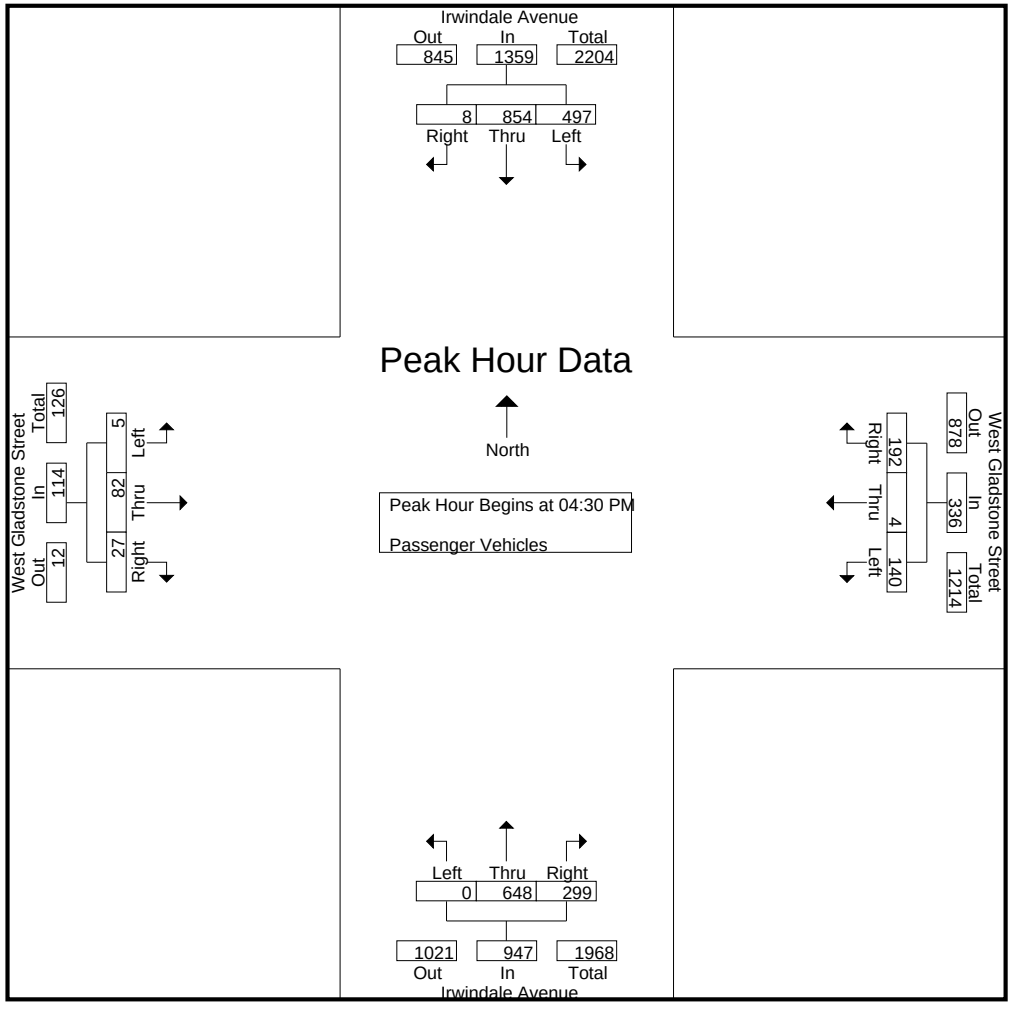

Counts Unlimited
PO Box 1178
Corona, CA 92878
(951) 268-6268

City of Irwindale
N/S: Irwindale Avenue
E/W: West Gladstone Street
Weather: Clear

File Name : 14_IRW_Irwindale Ave_Gladstone PM
Site Code : 05117366
Start Date : 5/31/2017
Page No : 3

	Irwindale Avenue Southbound				West Gladstone Street Westbound				Irwindale Avenue Northbound				West Gladstone Street Eastbound				
Start Time	Left	Thru	Right	App. Total	Left	Thru	Right	App. Total	Left	Thru	Right	App. Total	Left	Thru	Right	App. Total	Int. Total
Peak Hour Analysis From 04:30 PM to 05:15 PM - Peak 1 of 1																	
Peak Hour for Each Approach Begins at:																	
	04:30 PM				04:30 PM				04:30 PM				04:30 PM				
+0 mins.	114	189	**3**	306	34	1	47	82	0	167	**90**	**257**	1	**27**	**11**	**39**	
+15 mins.	**132**	205	1	338	27	1	45	73	0	154	68	222	**2**	19	7	28	
+30 mins.	130	**244**	3	**377**	**42**	**2**	**54**	**98**	0	**168**	62	230	1	17	4	22	
+45 mins.	121	216	1	338	37	0	46	83	0	159	79	238	1	19	5	25	
Total Volume	497	854	8	1359	140	4	192	336	0	648	299	947	5	82	27	114	
% App. Total	36.6	62.8	0.6		41.7	1.2	57.1		0	68.4	31.6		4.4	71.9	23.7		
PHF	.941	.875	.667	.901	.833	.500	.889	.857	.000	.964	.831	.921	.625	.759	.614	.731	

Counts Unlimited
PO Box 1178
Corona, CA 92878
(951) 268-6268

City of Irwindale
N/S: Irwindale Avenue
E/W: West Gladstone Street
Weather: Clear

File Name : 14_IRW_Irwindale Ave_Gladstone PM
Site Code : 05117366
Start Date : 5/31/2017
Page No : 1

Groups Printed- Large 2 Axle Vehicles

	Irwindale Avenue Southbound					West Gladstone Street Westbound					Irwindale Avenue Northbound					West Gladstone Street Eastbound							
Start Time	Left	Thru	Right	RTOR	App. Total	Left	Thru	Right	RTOR	App. Total	Left	Thru	Right	RTOR	App. Total	Left	Thru	Right	RTOR	App. Total	Exclu. Total	Inclu. Total	Int. Total
04:00 PM	9	5	0	0	14	2	0	0	0	2	0	7	1	0	8	0	0	0	0	0	0	24	24
04:15 PM	4	12	0	0	16	0	0	1	1	1	0	8	1	0	9	0	0	0	0	0	1	26	27
04:30 PM	8	8	0	0	16	0	0	4	2	4	0	7	1	0	8	0	2	0	0	2	2	30	32
04:45 PM	6	7	0	0	13	1	0	0	0	1	0	4	1	0	5	0	0	0	0	0	0	19	19
Total	27	32	0	0	59	3	0	5	3	8	0	26	4	0	30	0	2	0	0	2	3	99	102
05:00 PM	4	5	0	0	9	1	0	1	1	2	1	12	2	1	15	0	0	0	0	0	2	26	28
05:15 PM	2	8	0	0	10	1	0	1	0	2	0	2	3	0	5	0	0	0	0	0	0	17	17
05:30 PM	3	6	0	0	9	0	0	0	0	0	0	4	3	0	7	0	0	0	0	0	0	16	16
05:45 PM	6	4	0	0	10	1	1	1	1	3	0	5	0	0	5	0	0	1	0	1	1	19	20
Total	15	23	0	0	38	3	1	3	2	7	1	23	8	1	32	0	0	1	0	1	3	78	81
Grand Total	42	55	0	0	97	6	1	8	5	15	1	49	12	1	62	0	2	1	0	3	6	177	183
Apprch %	43.3	56.7	0			40	6.7	53.3			1.6	79	19.4			0	66.7	33.3					
Total %	23.7	31.1	0		54.8	3.4	0.6	4.5		8.5	0.6	27.7	6.8		35	0	1.1	0.6		1.7	3.3	96.7	

	Irwindale Avenue Southbound				West Gladstone Street Westbound				Irwindale Avenue Northbound				West Gladstone Street Eastbound				
Start Time	Left	Thru	Right	App. Total	Left	Thru	Right	App. Total	Left	Thru	Right	App. Total	Left	Thru	Right	App. Total	Int. Total
Peak Hour Analysis From 04:30 PM to 05:15 PM - Peak 1 of 1																	
Peak Hour for Entire Intersection Begins at 04:30 PM																	
04:30 PM	**8**	**8**	0	**16**	0	0	**4**	**4**	0	7	1	8	0	**2**	0	**2**	**30**
04:45 PM	6	7	0	13	**1**	0	0	1	0	4	1	5	0	0	0	0	19
05:00 PM	4	5	0	9	1	0	1	2	**1**	**12**	2	**15**	0	0	0	0	26
05:15 PM	2	8	0	10	1	0	1	2	0	2	**3**	5	0	0	0	0	17
Total Volume	20	28	0	48	3	0	6	9	1	25	7	33	0	2	0	2	92
% App. Total	41.7	58.3	0		33.3	0	66.7		3	75.8	21.2		0	100	0		
PHF	.625	.875	.000	.750	.750	.000	.375	.563	.250	.521	.583	.550	.000	.250	.000	.250	.767

Counts Unlimited
PO Box 1178
Corona, CA 92878
(951) 268-6268

City of Irwindale
N/S: Irwindale Avenue
E/W: West Gladstone Street
Weather: Clear

File Name : 14_IRW_Irwindale Ave_Gladstone PM
Site Code : 05117366
Start Date : 5/31/2017
Page No : 2

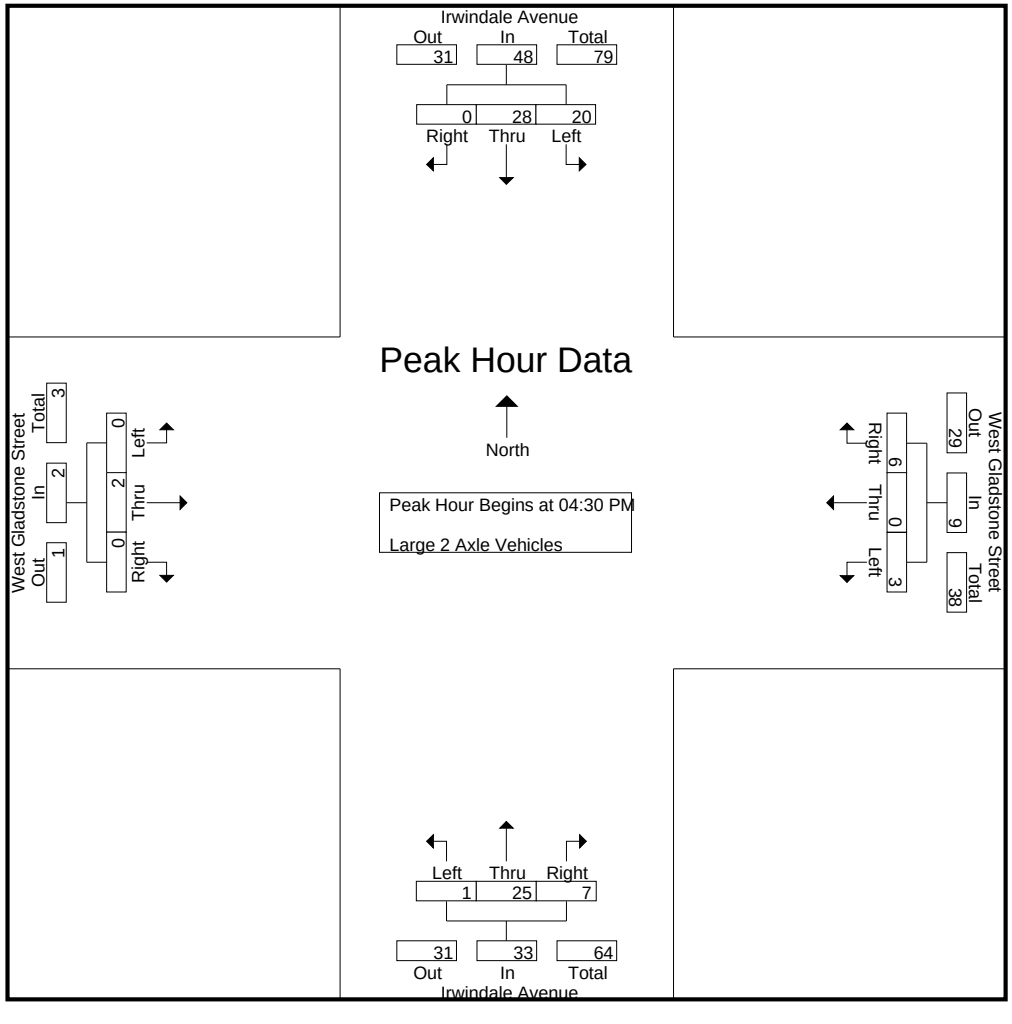

Counts Unlimited
PO Box 1178
Corona, CA 92878
(951) 268-6268

City of Irwindale
N/S: Irwindale Avenue
E/W: West Gladstone Street
Weather: Clear

File Name : 14_IRW_Irwindale Ave_Gladstone PM
Site Code : 05117366
Start Date : 5/31/2017
Page No : 3

	Irwindale Avenue Southbound				West Gladstone Street Westbound				Irwindale Avenue Northbound				West Gladstone Street Eastbound				
Start Time	Left	Thru	Right	App. Total	Left	Thru	Right	App. Total	Left	Thru	Right	App. Total	Left	Thru	Right	App. Total	Int. Total
Peak Hour Analysis From 04:30 PM to 05:15 PM - Peak 1 of 1																	
Peak Hour for Each Approach Begins at:																	
	04:30 PM				04:30 PM				04:30 PM				04:30 PM				
+0 mins.	**8**	**8**	0	**16**	0	0	**4**	**4**	0	7	1	8	0	**2**	0	**2**	
+15 mins.	6	7	0	13	**1**	0	0	1	0	4	1	5	0	0	0	0	
+30 mins.	4	5	0	9	1	0	1	2	**1**	**12**	2	**15**	0	0	0	0	
+45 mins.	2	8	0	10	1	0	1	2	0	2	**3**	5	0	0	0	0	
Total Volume	20	28	0	48	3	0	6	9	1	25	7	33	0	2	0	2	
% App. Total	41.7	58.3	0		33.3	0	66.7		3	75.8	21.2		0	100	0		
PHF	.625	.875	.000	.750	.750	.000	.375	.563	.250	.521	.583	.550	.000	.250	.000	.250	

Counts Unlimited
PO Box 1178
Corona, CA 92878
(951) 268-6268

City of Irwindale
N/S: Irwindale Avenue
E/W: West Gladstone Street
Weather: Clear

File Name : 14_IRW_Irwindale Ave_Gladstone PM
Site Code : 05117366
Start Date : 5/31/2017
Page No : 1

Groups Printed- 3 Axle Vehicles

	Irwindale Avenue Southbound					West Gladstone Street Westbound					Irwindale Avenue Northbound					West Gladstone Street Eastbound							
Start Time	Left	Thru	Right	RTOR	App. Total	Left	Thru	Right	RTOR	App. Total	Left	Thru	Right	RTOR	App. Total	Left	Thru	Right	RTOR	App. Total	Exclu. Total	Inclu. Total	Int. Total
04:00 PM	7	0	0	0	7	4	0	2	2	6	0	1	2	0	3	0	0	0	0	0	2	16	18
04:15 PM	3	1	0	0	4	1	0	1	0	2	0	3	0	0	3	0	0	1	1	1	1	10	11
04:30 PM	7	1	0	0	8	3	0	3	2	6	0	2	1	1	3	0	0	0	0	0	3	17	20
04:45 PM	3	0	0	0	3	1	0	1	0	2	0	1	0	0	1	0	1	0	0	1	0	7	7
Total	20	2	0	0	22	9	0	7	4	16	0	7	3	1	10	0	1	1	1	2	6	50	56
05:00 PM	0	0	0	0	0	1	0	0	0	1	0	1	0	0	1	0	0	0	0	0	0	2	2
05:15 PM	1	1	0	0	2	1	0	1	1	2	0	1	0	0	1	0	0	0	0	0	1	5	6
05:30 PM	1	0	0	0	1	0	0	1	1	1	0	0	0	0	0	0	0	0	0	0	1	2	3
05:45 PM	1	0	0	0	1	0	0	0	0	0	0	1	0	0	1	0	0	0	0	0	0	2	2
Total	3	1	0	0	4	2	0	2	2	4	0	3	0	0	3	0	0	0	0	0	2	11	13
Grand Total	23	3	0	0	26	11	0	9	6	20	0	10	3	1	13	0	1	1	1	2	8	61	69
Apprch %	88.5	11.5	0			55	0	45			0	76.9	23.1			0	50	50					
Total %	37.7	4.9	0		42.6	18	0	14.8		32.8	0	16.4	4.9		21.3	0	1.6	1.6		3.3	11.6	88.4	

	Irwindale Avenue Southbound				West Gladstone Street Westbound				Irwindale Avenue Northbound				West Gladstone Street Eastbound				
Start Time	Left	Thru	Right	App. Total	Left	Thru	Right	App. Total	Left	Thru	Right	App. Total	Left	Thru	Right	App. Total	Int. Total
Peak Hour Analysis From 04:30 PM to 05:15 PM - Peak 1 of 1																	
Peak Hour for Entire Intersection Begins at 04:30 PM																	
04:30 PM	**7**	**1**	0	**8**	**3**	0	**3**	**6**	0	**2**	**1**	**3**	0	0	0	0	**17**
04:45 PM	3	0	0	3	1	0	1	2	0	1	0	1	0	**1**	0	**1**	7
05:00 PM	0	0	0	0	1	0	0	1	0	1	0	1	0	0	0	0	2
05:15 PM	1	1	0	2	1	0	1	2	0	1	0	1	0	0	0	0	5
Total Volume	11	2	0	13	6	0	5	11	0	5	1	6	0	1	0	1	31
% App. Total	84.6	15.4	0		54.5	0	45.5		0	83.3	16.7		0	100	0		
PHF	.393	.500	.000	.406	.500	.000	.417	.458	.000	.625	.250	.500	.000	.250	.000	.250	.456

Counts Unlimited
PO Box 1178
Corona, CA 92878
(951) 268-6268

City of Irwindale
N/S: Irwindale Avenue
E/W: West Gladstone Street
Weather: Clear

File Name : 14_IRW_Irwindale Ave_Gladstone PM
Site Code : 05117366
Start Date : 5/31/2017
Page No : 2

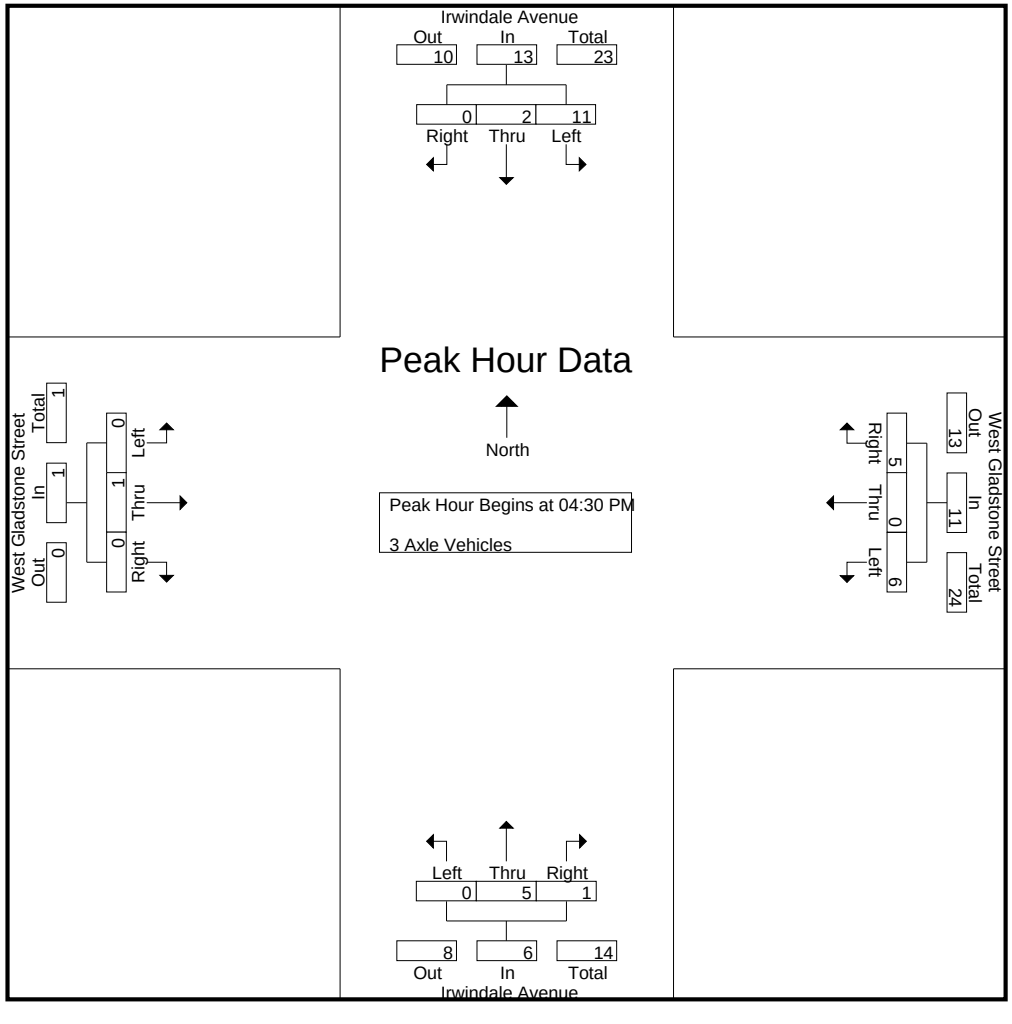

Counts Unlimited
PO Box 1178
Corona, CA 92878
(951) 268-6268

City of Irwindale
N/S: Irwindale Avenue
E/W: West Gladstone Street
Weather: Clear

File Name : 14_IRW_Irwindale Ave_Gladstone PM
Site Code : 05117366
Start Date : 5/31/2017

	Irwindale Avenue Southbound				West Gladstone Street Westbound				Irwindale Avenue Northbound				West Gladstone Street Eastbound				
Start Time	Left	Thru	Right	App. Total	Left	Thru	Right	App. Total	Left	Thru	Right	App. Total	Left	Thru	Right	App. Total	Int. Total
Peak Hour Analysis From 04:30 PM to 05:15 PM - Peak 1 of 1																	
Peak Hour for Each Approach Begins at:																	
	04:30 PM				04:30 PM				04:30 PM				04:30 PM				
+0 mins.	**7**	**1**	0	**8**	**3**	0	**3**	**6**	0	**2**	**1**	**3**	0	0	0	0	
+15 mins.	3	0	0	3	1	0	1	2	0	1	0	1	0	**1**	0	**1**	
+30 mins.	0	0	0	0	1	0	0	1	0	1	0	1	0	0	0	0	
+45 mins.	1	1	0	2	1	0	1	2	0	1	0	1	0	0	0	0	
Total Volume	11	2	0	13	6	0	5	11	0	5	1	6	0	1	0	1	
% App. Total	84.6	15.4	0		54.5	0	45.5		0	83.3	16.7		0	100	0		
PHF	.393	.500	.000	.406	.500	.000	.417	.458	.000	.625	.250	.500	.000	.250	.000	.250	

Counts Unlimited
PO Box 1178
Corona, CA 92878
(951) 268-6268

City of Irwindale
N/S: Irwindale Avenue
E/W: West Gladstone Street
Weather: Clear

File Name : 14_IRW_Irwindale Ave_Gladstone PM
Site Code : 05117366
Start Date : 5/31/2017
Page No : 1

Groups Printed- 4+ Axle Trucks

	Irwindale Avenue Southbound					West Gladstone Street Westbound					Irwindale Avenue Northbound					West Gladstone Street Eastbound							
Start Time	Left	Thru	Right	RTOR	App. Total	Left	Thru	Right	RTOR	App. Total	Left	Thru	Right	RTOR	App. Total	Left	Thru	Right	RTOR	App. Total	Exclu. Total	Inclu. Total	Int. Total
04:00 PM	2	5	0	0	7	2	0	5	4	7	0	2	1	0	3	0	0	0	0	0	4	17	21
04:15 PM	1	2	0	0	3	2	0	4	3	6	0	3	0	0	3	0	0	0	0	0	3	12	15
04:30 PM	0	1	0	0	1	1	0	2	1	3	0	7	0	0	7	0	0	0	0	0	1	11	12
04:45 PM	1	1	0	0	2	0	0	0	0	0	0	1	0	0	1	0	0	0	0	0	0	3	3
Total	4	9	0	0	13	5	0	11	8	16	0	13	1	0	14	0	0	0	0	0	8	43	51
05:00 PM	0	2	0	0	2	0	0	0	0	0	0	0	1	0	1	0	0	0	0	0	0	3	3
05:15 PM	1	1	0	0	2	0	0	2	1	2	0	1	0	0	1	0	0	0	0	0	1	5	6
05:30 PM	0	2	0	0	2	0	0	0	0	0	0	3	1	0	4	0	0	0	0	0	0	6	6
05:45 PM	2	3	0	0	5	1	0	5	2	6	0	2	0	0	2	0	0	0	0	0	2	13	15
Total	3	8	0	0	11	1	0	7	3	8	0	6	2	0	8	0	0	0	0	0	3	27	30
Grand Total	7	17	0	0	24	6	0	18	11	24	0	19	3	0	22	0	0	0	0	0	11	70	81
Apprch %	29.2	70.8	0			25	0	75			0	86.4	13.6			0	0	0					
Total %	10	24.3	0		34.3	8.6	0	25.7		34.3	0	27.1	4.3		31.4	0	0	0		0	13.6	86.4	

	Irwindale Avenue Southbound				West Gladstone Street Westbound				Irwindale Avenue Northbound				West Gladstone Street Eastbound				
Start Time	Left	Thru	Right	App. Total	Left	Thru	Right	App. Total	Left	Thru	Right	App. Total	Left	Thru	Right	App. Total	Int. Total
Peak Hour Analysis From 04:30 PM to 05:15 PM - Peak 1 of 1																	
Peak Hour for Entire Intersection Begins at 04:30 PM																	
04:30 PM	0	1	0	1	**1**	0	**2**	**3**	0	**7**	0	**7**	0	0	0	0	**11**
04:45 PM	**1**	1	0	**2**	0	0	0	0	0	1	0	1	0	0	0	0	3
05:00 PM	0	**2**	0	2	0	0	0	0	0	0	**1**	1	0	0	0	0	3
05:15 PM	1	1	0	2	0	0	2	2	0	1	0	1	0	0	0	0	5
Total Volume	2	5	0	7	1	0	4	5	0	9	1	10	0	0	0	0	22
% App. Total	28.6	71.4	0		20	0	80		0	90	10		0	0	0		
PHF	.500	.625	.000	.875	.250	.000	.500	.417	.000	.321	.250	.357	.000	.000	.000	.000	.500

Counts Unlimited
PO Box 1178
Corona, CA 92878
(951) 268-6268

City of Irwindale
N/S: Irwindale Avenue
E/W: West Gladstone Street
Weather: Clear

File Name : 14_IRW_Irwindale Ave_Gladstone PM
Site Code : 05117366
Start Date : 5/31/2017
Page No : 2

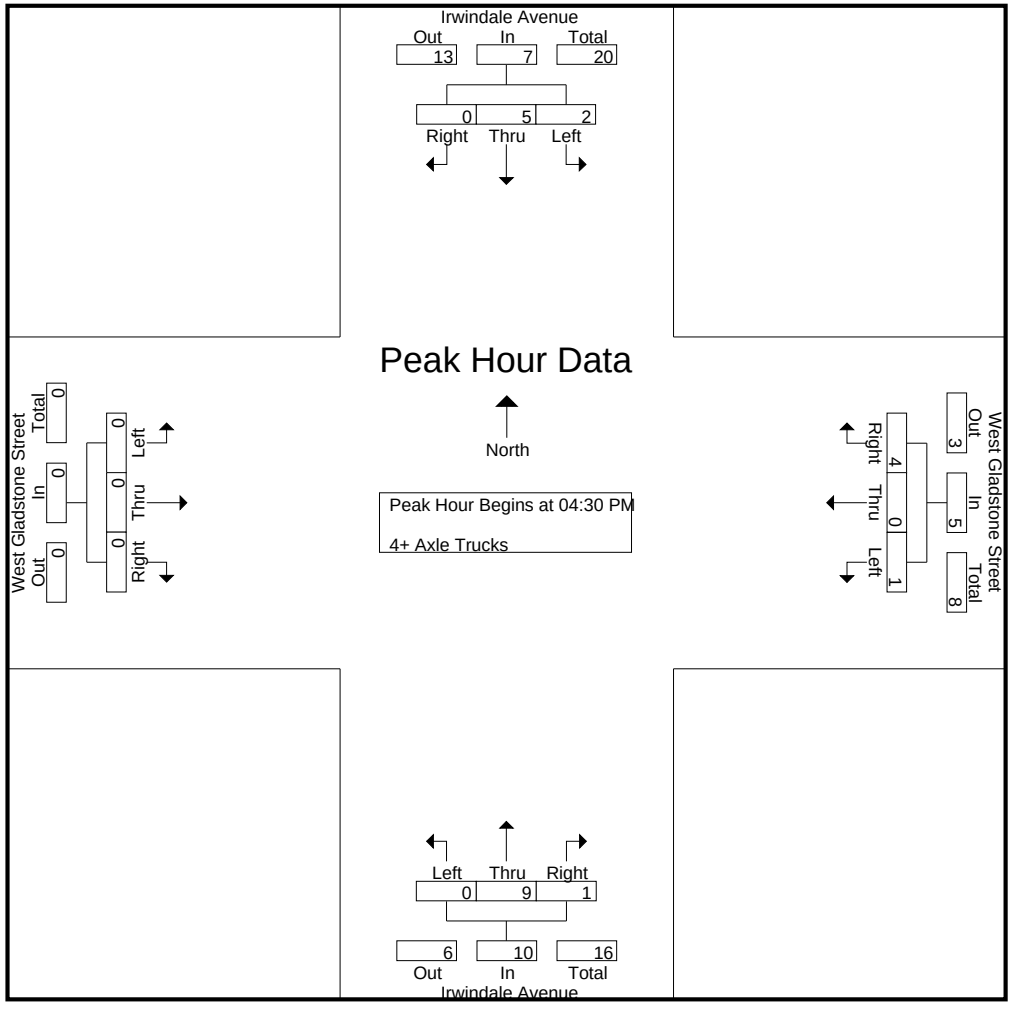

Counts Unlimited
PO Box 1178
Corona, CA 92878
(951) 268-6268

City of Irwindale
N/S: Irwindale Avenue
E/W: West Gladstone Street
Weather: Clear

File Name : 14_IRW_Irwindale Ave_Gladstone PM
Site Code : 05117366
Start Date : 5/31/2017
Page No : 3

	Irwindale Avenue Southbound				West Gladstone Street Westbound				Irwindale Avenue Northbound				West Gladstone Street Eastbound				
Start Time	Left	Thru	Right	App. Total	Left	Thru	Right	App. Total	Left	Thru	Right	App. Total	Left	Thru	Right	App. Total	Int. Total
Peak Hour Analysis From 04:30 PM to 05:15 PM - Peak 1 of 1																	
Peak Hour for Each Approach Begins at:																	
	04:30 PM				04:30 PM				04:30 PM				04:30 PM				
+0 mins.	0	1	0	1	**1**	0	**2**	**3**	0	**7**	0	**7**	0	0	0	0	
+15 mins.	**1**	1	0	**2**	0	0	0	0	0	1	0	1	0	0	0	0	
+30 mins.	0	**2**	0	2	0	0	0	0	0	0	**1**	1	0	0	0	0	
+45 mins.	1	1	0	2	0	0	2	2	0	1	0	1	0	0	0	0	
Total Volume	2	5	0	7	1	0	4	5	0	9	1	10	0	0	0	0	
% App. Total	28.6	71.4	0		20	0	80		0	90	10		0	0	0		
PHF	.500	.625	.000	.875	.250	.000	.500	.417	.000	.321	.250	.357	.000	.000	.000	.000	

Location: Irwindale
N/S: Irwindale Avenue
E/W: West Gladstone Street

Date: 5/31/2017
Day: Wednesday

PEDESTRIANS

	North Leg Irwindale Avenue	East Leg West Gladstone Street	South Leg Irwindale Avenue	West Leg West Gladstone Street	TOTAL
7:00 AM	0	0	0	0	0
7:15 AM	0	0	0	1	1
7:30 AM	0	0	0	0	0
7:45 AM	1	1	0	0	2
8:00 AM	0	0	0	0	0
8:15 AM	0	0	0	0	0
8:30 AM	0	1	0	0	1
8:45 AM	0	0	0	0	0
TOTAL VOLUMES:	1	2	0	1	4

	North Leg Irwindale Avenue	East Leg West Gladstone Street	South Leg Irwindale Avenue	West Leg West Gladstone Street	TOTAL
4:00 PM	0	0	0	0	0
4:15 PM	0	1	0	0	1
4:30 PM	0	0	0	0	0
4:45 PM	0	0	1	1	2
5:00 PM	0	1	0	1	2
5:15 PM	0	1	0	1	2
5:30 PM	0	0	0	0	0
5:45 PM	0	1	0	2	3
TOTAL VOLUMES:	0	4	1	5	10

Counts Unlimited
P.O. Box 1178
Corona, CA 92878
(951) 268-6268

Location: Irwindale
N/S: Irwindale Avenue
E/W: West Gladstone Street

Date: 5/31/2017
Day: Wednesday

BICYCLES

	North Leg Irwindale Avenue	East Leg West Gladstone Street	South Leg Irwindale Avenue	West Leg West Gladstone Street	TOTAL
7:00 AM	0	0	0	0	0
7:15 AM	0	0	0	0	0
7:30 AM	0	0	0	0	0
7:45 AM	0	0	0	0	0
8:00 AM	0	0	1	3	4
8:15 AM	0	0	0	0	0
8:30 AM	0	0	0	1	1
8:45 AM	0	1	0	0	1
TOTAL VOLUMES:	0	1	1	4	6

	North Leg Irwindale Avenue	East Leg West Gladstone Street	South Leg Irwindale Avenue	West Leg West Gladstone Street	TOTAL
4:00 PM	0	1	0	0	1
4:15 PM	0	0	0	1	1
4:30 PM	2	0	2	2	6
4:45 PM	0	1	0	0	1
5:00 PM	0	0	0	0	0
5:15 PM	0	0	1	0	1
5:30 PM	2	0	0	0	2
5:45 PM	0	0	0	1	1
TOTAL VOLUMES:	4	2	3	4	13

Counts Unlimited
P.O. Box 1178
Corona, CA 92878
(951) 268-6268

Counts Unlimited
PO Box 1178
Corona, CA 92878
(951) 268-6268

City of Irwindale
N/S: Irwindale Avenue
E/W: Arrow Highway
Weather: Clear

File Name : 15_IRW_Irwindale Ave_Arrow Hwy AM
Site Code : 05117366
Start Date : 5/31/2017
Page No : 1

Groups Printed- Passenger Vehicles - Large 2 Axle Vehicles - 3 Axle Vehicles - 4+ Axle Trucks

	Irwindale Avenue Southbound					Arrow Highway Westbound					Irwindale Avenue Northbound					Arrow Highway Eastbound							
Start Time	Left	Thru	Right	RTOR	App. Total	Left	Thru	Right	RTOR	App. Total	Left	Thru	Right	RTOR	App. Total	Left	Thru	Right	RTOR	App. Total	Exclu. Total	Inclu. Total	Int. Total
07:00 AM	14	78	121	61	213	15	279	22	3	316	44	138	9	3	191	43	60	11	1	114	68	834	902
07:15 AM	15	102	111	60	228	6	255	21	5	282	40	110	11	0	161	49	73	10	2	132	67	803	870
07:30 AM	21	84	124	53	229	21	298	17	3	336	34	132	17	3	183	62	101	6	2	169	61	917	978
07:45 AM	28	134	126	55	288	16	261	24	4	301	45	149	14	4	208	78	104	20	7	202	70	999	1069
Total	78	398	482	229	958	58	1093	84	15	1235	163	529	51	10	743	232	338	47	12	617	266	3553	3819
08:00 AM	22	106	94	35	222	11	237	31	5	279	41	146	19	5	206	76	113	15	4	204	49	911	960
08:15 AM	27	133	102	31	262	19	226	26	6	271	43	152	15	3	210	61	105	11	2	177	42	920	962
08:30 AM	9	121	103	51	233	24	198	29	4	251	37	135	6	2	178	62	96	13	3	171	60	833	893
08:45 AM	19	119	87	24	225	20	176	32	9	228	31	118	16	2	165	50	87	19	5	156	40	774	814
Total	77	479	386	141	942	74	837	118	24	1029	152	551	56	12	759	249	401	58	14	708	191	3438	3629
Grand Total	155	877	868	370	1900	132	1930	202	39	2264	315	1080	107	22	1502	481	739	105	26	1325	457	6991	7448
Apprch %	8.2	46.2	45.7			5.8	85.2	8.9			21	71.9	7.1			36.3	55.8	7.9					
Total %	2.2	12.5	12.4		27.2	1.9	27.6	2.9		32.4	4.5	15.4	1.5		21.5	6.9	10.6	1.5		19	6.1	93.9	
Passenger Vehicles	134	835	768		2072	127	1826	187		2176	309	1046	94		1464	425	666	94		1210	0	0	6922
% Passenger Vehicles	86.5	95.2	88.5	90.5	91.3	96.2	94.6	92.6	92.3	94.5	98.1	96.9	87.9	68.2	96.1	88.4	90.1	89.5	96.2	89.6	0	0	92.9
Large 2 Axle Vehicles	6	28	52		104	4	77	10		93	5	23	8		39	36	47	9		93	0	0	329
% Large 2 Axle Vehicles	3.9	3.2	6	4.9	4.6	3	4	5	5.1	4	1.6	2.1	7.5	13.6	2.6	7.5	6.4	8.6	3.8	6.9	0	0	4.4
3 Axle Vehicles	7	4	10		24	0	13	1		14	1	3	2		8	10	12	0		22	0	0	68
% 3 Axle Vehicles	4.5	0.5	1.2	0.8	1.1	0	0.7	0.5	0	0.6	0.3	0.3	1.9	9.1	0.5	2.1	1.6	0	0	1.6	0	0	0.9
4+ Axle Trucks	8	10	38		70	1	14	4		20	0	8	3		13	10	14	2		26	0	0	129
% 4+ Axle Trucks	5.2	1.1	4.4	3.8	3.1	0.8	0.7	2	2.6	0.9	0	0.7	2.8	9.1	0.9	2.1	1.9	1.9	0	1.9	0	0	1.7

	Irwindale Avenue Southbound				Arrow Highway Westbound				Irwindale Avenue Northbound				Arrow Highway Eastbound				
Start Time	Left	Thru	Right	App. Total	Left	Thru	Right	App. Total	Left	Thru	Right	App. Total	Left	Thru	Right	App. Total	Int. Total
Peak Hour Analysis From 07:00 AM to 08:45 AM - Peak 1 of 1																	
Peak Hour for Entire Intersection Begins at 07:30 AM																	
07:30 AM	21	84	124	229	**21**	**298**	17	**336**	34	132	17	183	62	101	6	169	917
07:45 AM	**28**	**134**	**126**	**288**	16	261	24	301	**45**	149	14	208	**78**	104	**20**	202	**999**
08:00 AM	22	106	94	222	11	237	**31**	279	41	146	**19**	206	76	**113**	15	**204**	911
08:15 AM	27	133	102	262	19	226	26	271	43	**152**	15	**210**	61	105	11	177	920
Total Volume	98	457	446	1001	67	1022	98	1187	163	579	65	807	277	423	52	752	3747
% App. Total	9.8	45.7	44.6		5.6	86.1	8.3		20.2	71.7	8.1		36.8	56.2	6.9		
PHF	.875	.853	.885	.869	.798	.857	.790	.883	.906	.952	.855	.961	.888	.936	.650	.922	.938

Counts Unlimited
PO Box 1178
Corona, CA 92878
(951) 268-6268

City of Irwindale
N/S: Irwindale Avenue
E/W: Arrow Highway
Weather: Clear

File Name : 15_IRW_Irwindale Ave_Arrow Hwy AM
Site Code : 05117366
Start Date : 5/31/2017
Page No : 2

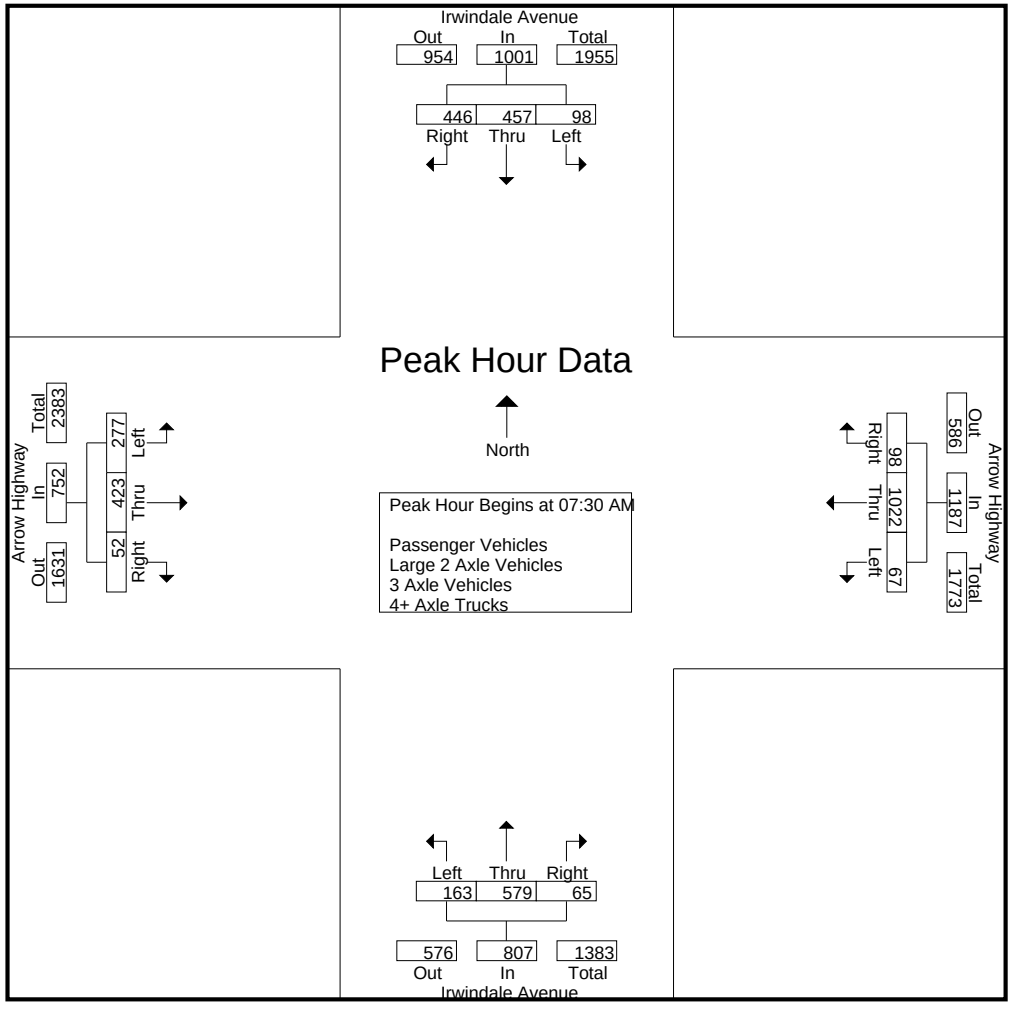

Counts Unlimited
PO Box 1178
Corona, CA 92878
(951) 268-6268

City of Irwindale
N/S: Irwindale Avenue
E/W: Arrow Highway
Weather: Clear

File Name : 15_IRW_Irwindale Ave_Arrow Hwy AM
Site Code : 05117366
Start Date : 5/31/2017
Page No : 3

	Irwindale Avenue Southbound				Arrow Highway Westbound				Irwindale Avenue Northbound				Arrow Highway Eastbound				
Start Time	Left	Thru	Right	App. Total	Left	Thru	Right	App. Total	Left	Thru	Right	App. Total	Left	Thru	Right	App. Total	Int. Total
Peak Hour Analysis From 07:00 AM to 08:45 AM - Peak 1 of 1																	
Peak Hour for Each Approach Begins at:																	
	07:45 AM				07:00 AM				07:30 AM				07:45 AM				
+0 mins.	**28**	**134**	**126**	**288**	15	279	22	316	34	132	17	183	**78**	104	**20**	202	
+15 mins.	22	106	94	222	6	255	21	282	**45**	149	14	208	76	**113**	15	**204**	
+30 mins.	27	133	102	262	**21**	**298**	17	**336**	41	146	**19**	206	61	105	11	177	
+45 mins.	9	121	103	233	16	261	**24**	301	43	**152**	15	**210**	62	96	13	171	
Total Volume	86	494	425	1005	58	1093	84	1235	163	579	65	807	277	418	59	754	
% App. Total	8.6	49.2	42.3		4.7	88.5	6.8		20.2	71.7	8.1		36.7	55.4	7.8		
PHF	.768	.922	.843	.872	.690	.917	.875	.919	.906	.952	.855	.961	.888	.925	.738	.924	

Counts Unlimited
PO Box 1178
Corona, CA 92878
(951) 268-6268

City of Irwindale
N/S: Irwindale Avenue
E/W: Arrow Highway
Weather: Clear

File Name : 15_IRW_Irwindale Ave_Arrow Hwy AM
Site Code : 05117366
Start Date : 5/31/2017
Page No : 1

Groups Printed- Passenger Vehicles

	Irwindale Avenue Southbound					Arrow Highway Westbound					Irwindale Avenue Northbound					Arrow Highway Eastbound							
Start Time	Left	Thru	Right	RTOR	App. Total	Left	Thru	Right	RTOR	App. Total	Left	Thru	Right	RTOR	App. Total	Left	Thru	Right	RTOR	App. Total	Exclu. Total	Inclu. Total	Int. Total
07:00 AM	14	75	119	60	208	14	260	20	2	294	42	135	7	1	184	37	47	7	1	91	64	777	841
07:15 AM	13	95	99	55	207	5	245	19	5	269	39	105	9	0	153	38	65	10	2	113	62	742	804
07:30 AM	16	80	115	51	211	20	285	14	2	319	34	122	17	3	173	57	92	6	2	155	58	858	916
07:45 AM	23	128	112	47	263	16	255	22	4	293	44	147	12	3	203	71	97	18	7	186	61	945	1006
Total	66	378	445	213	889	55	1045	75	13	1175	159	509	45	7	713	203	301	41	12	545	245	3322	3567
08:00 AM	20	101	82	31	203	9	229	28	5	266	41	144	17	3	202	70	107	14	3	191	42	862	904
08:15 AM	24	124	87	29	235	19	206	25	5	250	43	149	12	2	204	55	87	11	2	153	38	842	880
08:30 AM	5	114	84	41	203	24	181	28	4	233	35	131	5	2	171	53	88	12	3	153	50	760	810
08:45 AM	19	118	70	21	207	20	165	31	9	216	31	113	15	1	159	44	83	16	5	143	36	725	761
Total	68	457	323	122	848	72	781	112	23	965	150	537	49	8	736	222	365	53	13	640	166	3189	3355
Grand Total	134	835	768	335	1737	127	1826	187	36	2140	309	1046	94	15	1449	425	666	94	25	1185	411	6511	6922
Apprch %	7.7	48.1	44.2			5.9	85.3	8.7			21.3	72.2	6.5			35.9	56.2	7.9					
Total %	2.1	12.8	11.8		26.7	2	28	2.9		32.9	4.7	16.1	1.4		22.3	6.5	10.2	1.4		18.2	5.9	94.1	

	Irwindale Avenue Southbound				Arrow Highway Westbound				Irwindale Avenue Northbound				Arrow Highway Eastbound				
Start Time	Left	Thru	Right	App. Total	Left	Thru	Right	App. Total	Left	Thru	Right	App. Total	Left	Thru	Right	App. Total	Int. Total
Peak Hour Analysis From 07:30 AM to 08:15 AM - Peak 1 of 1																	
Peak Hour for Entire Intersection Begins at 07:30 AM																	
07:30 AM	16	80	**115**	211	**20**	**285**	14	**319**	34	122	**17**	173	57	92	6	155	858
07:45 AM	23	**128**	112	**263**	16	255	22	293	**44**	147	12	203	**71**	97	**18**	186	**945**
08:00 AM	20	101	82	203	9	229	**28**	266	41	144	17	202	70	**107**	14	**191**	862
08:15 AM	**24**	124	87	235	19	206	25	250	43	**149**	12	**204**	55	87	11	153	842
Total Volume	83	433	396	912	64	975	89	1128	162	562	58	782	253	383	49	685	3507
% App. Total	9.1	47.5	43.4		5.7	86.4	7.9		20.7	71.9	7.4		36.9	55.9	7.2		
PHF	.865	.846	.861	.867	.800	.855	.795	.884	.920	.943	.853	.958	.891	.895	.681	.897	.928

Counts Unlimited
PO Box 1178
Corona, CA 92878
(951) 268-6268

City of Irwindale
N/S: Irwindale Avenue
E/W: Arrow Highway
Weather: Clear

File Name : 15_IRW_Irwindale Ave_Arrow Hwy AM
Site Code : 05117366
Start Date : 5/31/2017
Page No : 2

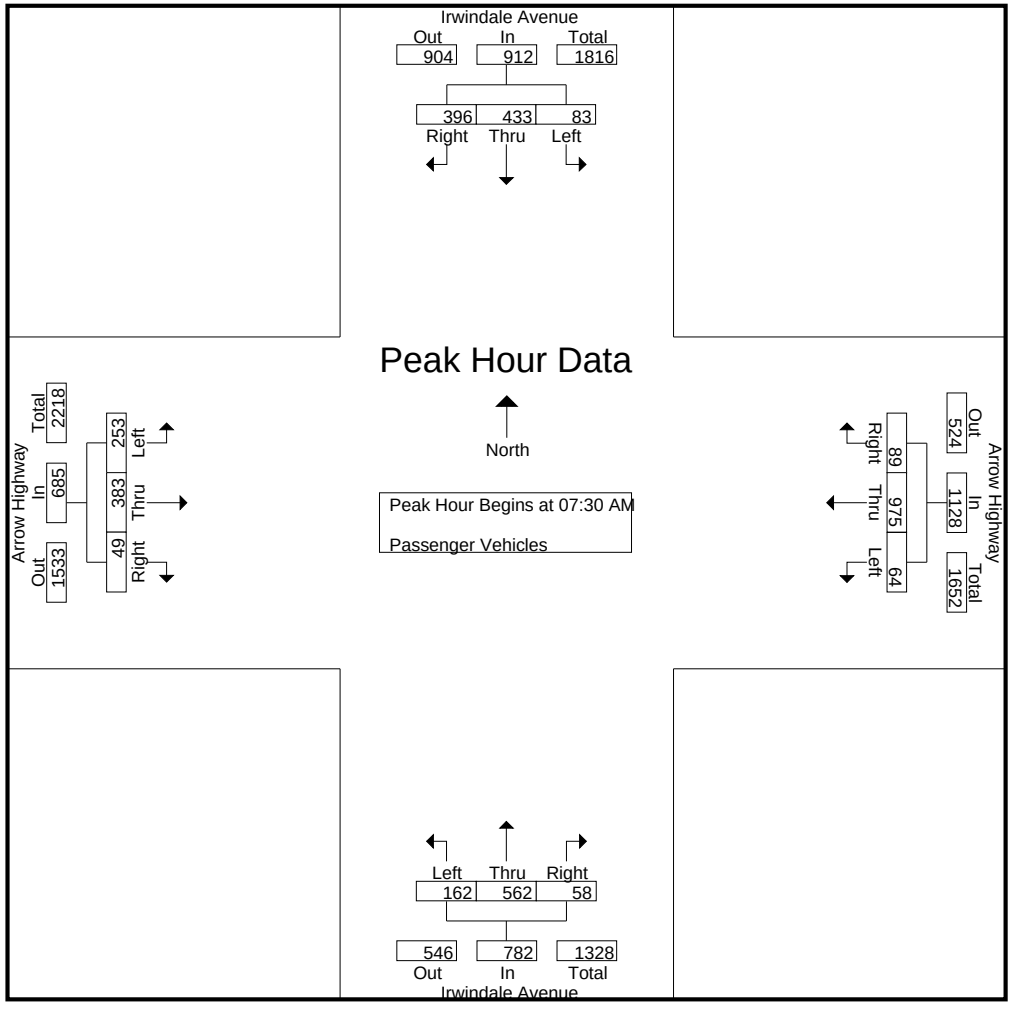

Counts Unlimited
PO Box 1178
Corona, CA 92878
(951) 268-6268

City of Irwindale
N/S: Irwindale Avenue
E/W: Arrow Highway
Weather: Clear

File Name : 15_IRW_Irwindale Ave_Arrow Hwy AM
Site Code : 05117366
Start Date : 5/31/2017
Page No : 3

	Irwindale Avenue Southbound				Arrow Highway Westbound				Irwindale Avenue Northbound				Arrow Highway Eastbound				
Start Time	Left	Thru	Right	App. Total	Left	Thru	Right	App. Total	Left	Thru	Right	App. Total	Left	Thru	Right	App. Total	Int. Total
Peak Hour Analysis From 07:30 AM to 08:15 AM - Peak 1 of 1																	
Peak Hour for Each Approach Begins at:																	
	07:30 AM				07:30 AM				07:30 AM				07:30 AM				
+0 mins.	16	80	**115**	211	**20**	**285**	14	**319**	34	122	**17**	173	57	92	6	155	
+15 mins.	23	**128**	112	**263**	16	255	22	293	**44**	147	12	203	**71**	97	**18**	186	
+30 mins.	20	101	82	203	9	229	**28**	266	41	144	17	202	70	**107**	14	**191**	
+45 mins.	**24**	124	87	235	19	206	25	250	43	**149**	12	**204**	55	87	11	153	
Total Volume	83	433	396	912	64	975	89	1128	162	562	58	782	253	383	49	685	
% App. Total	9.1	47.5	43.4		5.7	86.4	7.9		20.7	71.9	7.4		36.9	55.9	7.2		
PHF	.865	.846	.861	.867	.800	.855	.795	.884	.920	.943	.853	.958	.891	.895	.681	.897	

Counts Unlimited
PO Box 1178
Corona, CA 92878
(951) 268-6268

City of Irwindale
N/S: Irwindale Avenue
E/W: Arrow Highway
Weather: Clear

File Name : 15_IRW_Irwindale Ave_Arrow Hwy AM
Site Code : 05117366
Start Date : 5/31/2017
Page No : 1

Groups Printed- Large 2 Axle Vehicles

	Irwindale Avenue Southbound					Arrow Highway Westbound					Irwindale Avenue Northbound					Arrow Highway Eastbound							
Start Time	Left	Thru	Right	RTOR	App. Total	Left	Thru	Right	RTOR	App. Total	Left	Thru	Right	RTOR	App. Total	Left	Thru	Right	RTOR	App. Total	Exclu. Total	Inclu. Total	Int. Total
07:00 AM	0	3	1	0	4	1	12	1	0	14	2	3	1	1	6	3	8	4	0	15	1	39	40
07:15 AM	0	5	6	3	11	1	7	0	0	8	1	5	2	0	8	5	8	0	0	13	3	40	43
07:30 AM	1	1	7	1	9	0	7	3	1	10	0	4	0	0	4	3	5	0	0	8	2	31	33
07:45 AM	2	4	7	5	13	0	5	2	0	7	1	2	2	1	5	6	5	1	0	12	6	37	43
Total	3	13	21	9	37	2	31	6	1	39	4	14	5	2	23	17	26	5	0	48	12	147	159
08:00 AM	1	3	6	2	10	2	7	2	0	11	0	0	1	1	1	4	2	1	1	7	4	29	33
08:15 AM	1	7	6	0	14	0	16	1	1	17	0	2	1	0	3	4	12	0	0	16	1	50	51
08:30 AM	1	4	11	6	16	0	15	0	0	15	1	2	1	0	4	7	5	0	0	12	6	47	53
08:45 AM	0	1	8	1	9	0	8	1	0	9	0	5	0	0	5	4	2	3	0	9	1	32	33
Total	3	15	31	9	49	2	46	4	1	52	1	9	3	1	13	19	21	4	1	44	12	158	170
Grand Total	6	28	52	18	86	4	77	10	2	91	5	23	8	3	36	36	47	9	1	92	24	305	329
Apprch %	7	32.6	60.5			4.4	84.6	11			13.9	63.9	22.2			39.1	51.1	9.8					
Total %	2	9.2	17		28.2	1.3	25.2	3.3		29.8	1.6	7.5	2.6		11.8	11.8	15.4	3		30.2	7.3	92.7	

	Irwindale Avenue Southbound				Arrow Highway Westbound				Irwindale Avenue Northbound				Arrow Highway Eastbound				
Start Time	Left	Thru	Right	App. Total	Left	Thru	Right	App. Total	Left	Thru	Right	App. Total	Left	Thru	Right	App. Total	Int. Total
Peak Hour Analysis From 07:30 AM to 08:15 AM - Peak 1 of 1																	
Peak Hour for Entire Intersection Begins at 07:30 AM																	
07:30 AM	1	1	**7**	9	0	7	**3**	10	0	**4**	0	4	3	5	0	8	31
07:45 AM	**2**	4	7	13	0	5	2	7	**1**	2	**2**	**5**	**6**	5	**1**	12	37
08:00 AM	1	3	6	10	**2**	7	2	11	0	0	1	1	4	2	1	7	29
08:15 AM	1	**7**	6	**14**	0	**16**	1	**17**	0	2	1	3	4	**12**	0	**16**	**50**
Total Volume	5	15	26	46	2	35	8	45	1	8	4	13	17	24	2	43	147
% App. Total	10.9	32.6	56.5		4.4	77.8	17.8		7.7	61.5	30.8		39.5	55.8	4.7		
PHF	.625	.536	.929	.821	.250	.547	.667	.662	.250	.500	.500	.650	.708	.500	.500	.672	.735

Counts Unlimited
PO Box 1178
Corona, CA 92878
(951) 268-6268

City of Irwindale
N/S: Irwindale Avenue
E/W: Arrow Highway
Weather: Clear

File Name : 15_IRW_Irwindale Ave_Arrow Hwy AM
Site Code : 05117366
Start Date : 5/31/2017
Page No : 2

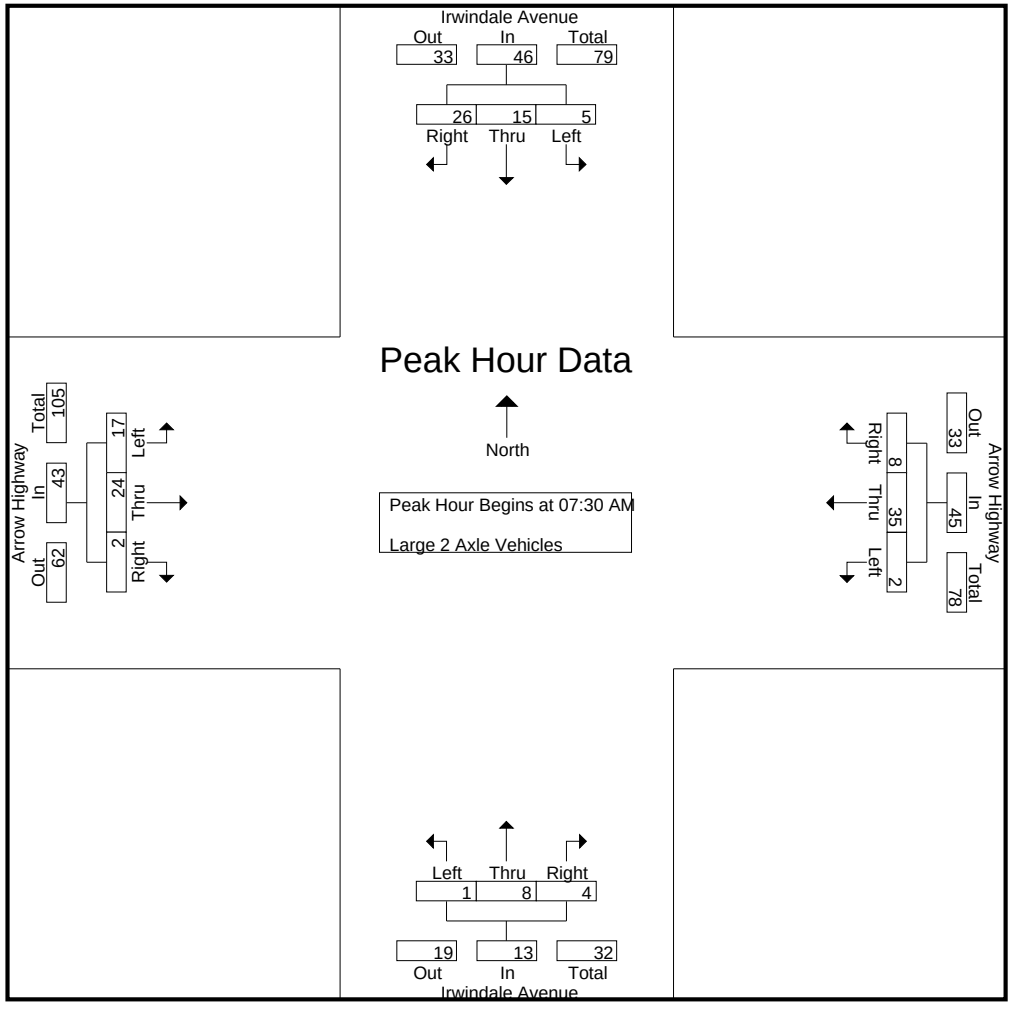

Counts Unlimited
PO Box 1178
Corona, CA 92878
(951) 268-6268

City of Irwindale
N/S: Irwindale Avenue
E/W: Arrow Highway
Weather: Clear

File Name : 15_IRW_Irwindale Ave_Arrow Hwy AM
Site Code : 05117366
Start Date : 5/31/2017
Page No : 3

	Irwindale Avenue Southbound				Arrow Highway Westbound				Irwindale Avenue Northbound				Arrow Highway Eastbound				
Start Time	Left	Thru	Right	App. Total	Left	Thru	Right	App. Total	Left	Thru	Right	App. Total	Left	Thru	Right	App. Total	Int. Total
Peak Hour Analysis From 07:30 AM to 08:15 AM - Peak 1 of 1																	
Peak Hour for Each Approach Begins at:																	
	07:30 AM				07:30 AM				07:30 AM				07:30 AM				
+0 mins.	1	1	**7**	9	0	7	**3**	10	0	**4**	0	4	3	5	0	8	
+15 mins.	**2**	4	7	13	0	5	2	7	**1**	2	**2**	**5**	**6**	5	**1**	12	
+30 mins.	1	3	6	10	**2**	7	2	11	0	0	1	1	4	2	1	7	
+45 mins.	1	**7**	6	**14**	0	**16**	1	**17**	0	2	1	3	4	**12**	0	**16**	
Total Volume	5	15	26	46	2	35	8	45	1	8	4	13	17	24	2	43	
% App. Total	10.9	32.6	56.5		4.4	77.8	17.8		7.7	61.5	30.8		39.5	55.8	4.7		
PHF	.625	.536	.929	.821	.250	.547	.667	.662	.250	.500	.500	.650	.708	.500	.500	.672	

Counts Unlimited
PO Box 1178
Corona, CA 92878
(951) 268-6268

City of Irwindale
N/S: Irwindale Avenue
E/W: Arrow Highway
Weather: Clear

File Name : 15_IRW_Irwindale Ave_Arrow Hwy AM
Site Code : 05117366
Start Date : 5/31/2017
Page No : 1

Groups Printed- 3 Axle Vehicles

	Irwindale Avenue Southbound					Arrow Highway Westbound					Irwindale Avenue Northbound					Arrow Highway Eastbound							
Start Time	Left	Thru	Right	RTOR	App. Total	Left	Thru	Right	RTOR	App. Total	Left	Thru	Right	RTOR	App. Total	Left	Thru	Right	RTOR	App. Total	Exclu. Total	Inclu. Total	Int. Total
07:00 AM	0	0	1	1	1	0	4	0	0	4	0	0	0	0	0	1	3	0	0	4	1	9	10
07:15 AM	1	1	1	1	3	0	1	1	0	2	0	0	0	0	0	3	0	0	0	3	1	8	9
07:30 AM	1	0	1	0	2	0	4	0	0	4	0	3	0	0	3	0	1	0	0	1	0	10	10
07:45 AM	2	1	0	0	3	0	0	0	0	0	0	0	0	0	0	1	1	0	0	2	0	5	5
Total	4	2	3	2	9	0	9	1	0	10	0	3	0	0	3	5	5	0	0	10	2	32	34
08:00 AM	0	0	0	0	0	0	0	0	0	0	0	0	0	0	0	1	1	0	0	2	0	2	2
08:15 AM	1	1	1	1	3	0	2	0	0	2	0	0	1	1	1	0	4	0	0	4	2	10	12
08:30 AM	2	1	3	0	6	0	0	0	0	0	1	0	0	0	1	2	1	0	0	3	0	10	10
08:45 AM	0	0	3	0	3	0	2	0	0	2	0	0	1	1	1	2	1	0	0	3	1	9	10
Total	3	2	7	1	12	0	4	0	0	4	1	0	2	2	3	5	7	0	0	12	3	31	34
Grand Total	7	4	10	3	21	0	13	1	0	14	1	3	2	2	6	10	12	0	0	22	5	63	68
Apprch %	33.3	19	47.6			0	92.9	7.1			16.7	50	33.3			45.5	54.5	0					
Total %	11.1	6.3	15.9		33.3	0	20.6	1.6		22.2	1.6	4.8	3.2		9.5	15.9	19	0		34.9	7.4	92.6	

	Irwindale Avenue Southbound				Arrow Highway Westbound				Irwindale Avenue Northbound				Arrow Highway Eastbound				
Start Time	Left	Thru	Right	App. Total	Left	Thru	Right	App. Total	Left	Thru	Right	App. Total	Left	Thru	Right	App. Total	Int. Total
Peak Hour Analysis From 07:30 AM to 08:15 AM - Peak 1 of 1																	
Peak Hour for Entire Intersection Begins at 07:30 AM																	
07:30 AM	1	0	**1**	2	0	**4**	0	**4**	0	**3**	0	**3**	0	1	0	1	**10**
07:45 AM	**2**	**1**	0	**3**	0	0	0	0	0	0	0	0	**1**	1	0	2	5
08:00 AM	0	0	0	0	0	0	0	0	0	0	0	0	1	1	0	2	2
08:15 AM	1	1	1	3	0	2	0	2	0	0	**1**	1	0	**4**	0	**4**	10
Total Volume	4	2	2	8	0	6	0	6	0	3	1	4	2	7	0	9	27
% App. Total	50	25	25		0	100	0		0	75	25		22.2	77.8	0		
PHF	.500	.500	.500	.667	.000	.375	.000	.375	.000	.250	.250	.333	.500	.438	.000	.563	.675

Counts Unlimited
PO Box 1178
Corona, CA 92878
(951) 268-6268

City of Irwindale
N/S: Irwindale Avenue
E/W: Arrow Highway
Weather: Clear

File Name : 15_IRW_Irwindale Ave_Arrow Hwy AM
Site Code : 05117366
Start Date : 5/31/2017
Page No : 2

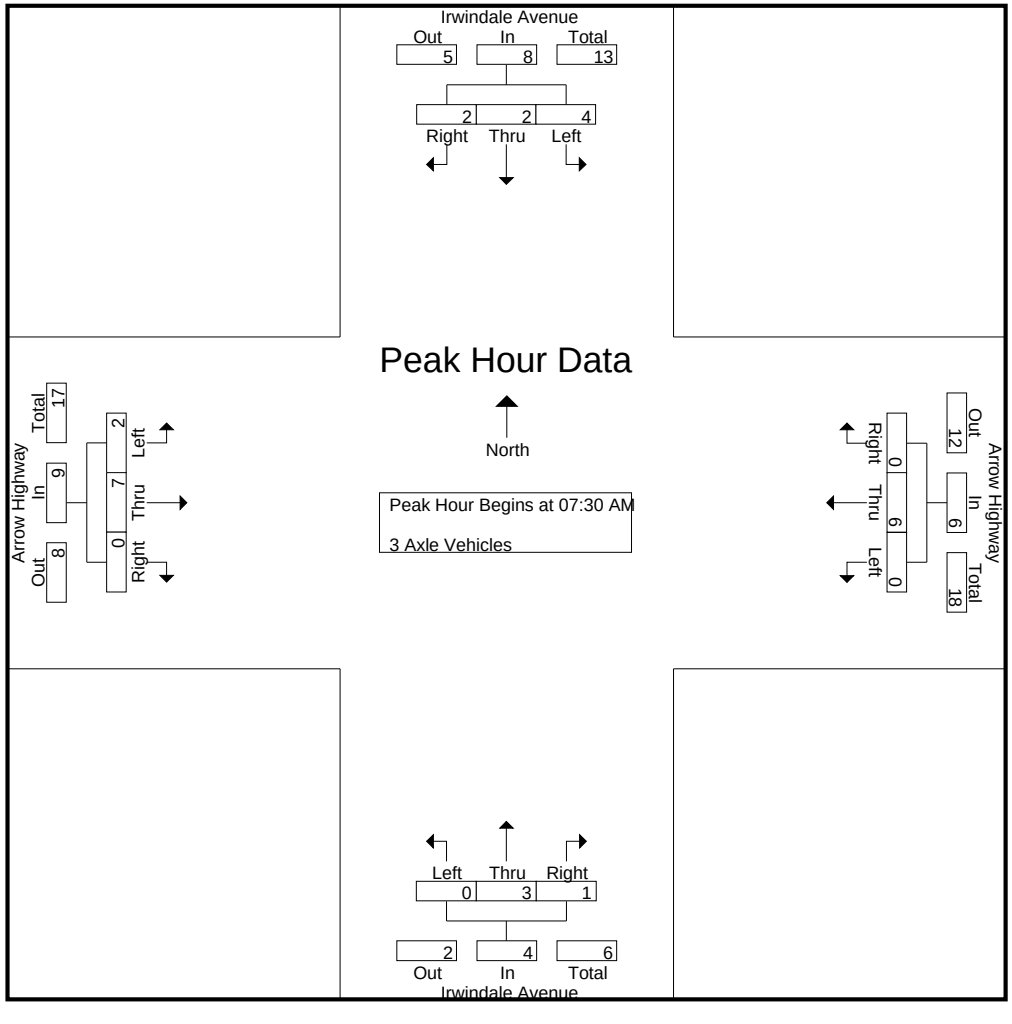

Counts Unlimited
PO Box 1178
Corona, CA 92878
(951) 268-6268

City of Irwindale
N/S: Irwindale Avenue
E/W: Arrow Highway
Weather: Clear

File Name : 15_IRW_Irwindale Ave_Arrow Hwy AM
Site Code : 05117366
Start Date : 5/31/2017
Page No : 3

	Irwindale Avenue Southbound				Arrow Highway Westbound				Irwindale Avenue Northbound				Arrow Highway Eastbound				
Start Time	Left	Thru	Right	App. Total	Left	Thru	Right	App. Total	Left	Thru	Right	App. Total	Left	Thru	Right	App. Total	Int. Total
Peak Hour Analysis From 07:30 AM to 08:15 AM - Peak 1 of 1																	
Peak Hour for Each Approach Begins at:																	
	07:30 AM				07:30 AM				07:30 AM				07:30 AM				
+0 mins.	1	0	**1**	2	0	**4**	0	**4**	0	**3**	0	**3**	0	1	0	1	
+15 mins.	**2**	**1**	0	**3**	0	0	0	0	0	0	0	0	**1**	1	0	2	
+30 mins.	0	0	0	0	0	0	0	0	0	0	0	0	1	1	0	2	
+45 mins.	1	1	1	3	0	2	0	2	0	0	**1**	1	0	**4**	0	**4**	
Total Volume	4	2	2	8	0	6	0	6	0	3	1	4	2	7	0	9	
% App. Total	50	25	25		0	100	0		0	75	25		22.2	77.8	0		
PHF	.500	.500	.500	.667	.000	.375	.000	.375	.000	.250	.250	.333	.500	.438	.000	.563	

Counts Unlimited
PO Box 1178
Corona, CA 92878
(951) 268-6268

City of Irwindale
N/S: Irwindale Avenue
E/W: Arrow Highway
Weather: Clear

File Name : 15_IRW_Irwindale Ave_Arrow Hwy AM
Site Code : 05117366
Start Date : 5/31/2017
Page No : 1

Groups Printed- 4+ Axle Trucks

	Irwindale Avenue Southbound					Arrow Highway Westbound					Irwindale Avenue Northbound					Arrow Highway Eastbound							
Start Time	Left	Thru	Right	RTOR	App. Total	Left	Thru	Right	RTOR	App. Total	Left	Thru	Right	RTOR	App. Total	Left	Thru	Right	RTOR	App. Total	Exclu. Total	Inclu. Total	Int. Total
07:00 AM	0	0	0	0	0	0	3	1	1	4	0	0	1	1	1	2	2	0	0	4	2	9	11
07:15 AM	1	1	5	1	7	0	2	1	0	3	0	0	0	0	0	3	0	0	0	3	1	13	14
07:30 AM	3	3	1	1	7	1	2	0	0	3	0	3	0	0	3	2	3	0	0	5	1	18	19
07:45 AM	1	1	7	3	9	0	1	0	0	1	0	0	0	0	0	0	1	1	0	2	3	12	15
Total	5	5	13	5	23	1	8	2	1	11	0	3	1	1	4	7	6	1	0	14	7	52	59
08:00 AM	1	2	6	2	9	0	1	1	0	2	0	2	1	1	3	1	3	0	0	4	3	18	21
08:15 AM	1	1	8	1	10	0	2	0	0	2	0	1	1	0	2	2	2	0	0	4	1	18	19
08:30 AM	1	2	5	4	8	0	2	1	0	3	0	2	0	0	2	0	2	1	0	3	4	16	20
08:45 AM	0	0	6	2	6	0	1	0	0	1	0	0	0	0	0	0	1	0	0	1	2	8	10
Total	3	5	25	9	33	0	6	2	0	8	0	5	2	1	7	3	8	1	0	12	10	60	70
Grand Total	8	10	38	14	56	1	14	4	1	19	0	8	3	2	11	10	14	2	0	26	17	112	129
Apprch %	14.3	17.9	67.9			5.3	73.7	21.1			0	72.7	27.3			38.5	53.8	7.7					
Total %	7.1	8.9	33.9		50	0.9	12.5	3.6		17	0	7.1	2.7		9.8	8.9	12.5	1.8		23.2	13.2	86.8	

	Irwindale Avenue Southbound				Arrow Highway Westbound				Irwindale Avenue Northbound				Arrow Highway Eastbound				
Start Time	Left	Thru	Right	App. Total	Left	Thru	Right	App. Total	Left	Thru	Right	App. Total	Left	Thru	Right	App. Total	Int. Total
Peak Hour Analysis From 07:30 AM to 08:15 AM - Peak 1 of 1																	
Peak Hour for Entire Intersection Begins at 07:30 AM																	
07:30 AM	**3**	**3**	1	7	**1**	**2**	0	**3**	0	**3**	0	**3**	**2**	**3**	0	**5**	**18**
07:45 AM	1	1	7	9	0	1	0	1	0	0	0	0	0	1	**1**	2	12
08:00 AM	1	2	6	9	0	1	**1**	2	0	2	**1**	3	1	3	0	4	18
08:15 AM	1	1	**8**	**10**	0	2	0	2	0	1	1	2	2	2	0	4	18
Total Volume	6	7	22	35	1	6	1	8	0	6	2	8	5	9	1	15	66
% App. Total	17.1	20	62.9		12.5	75	12.5		0	75	25		33.3	60	6.7		
PHF	.500	.583	.688	.875	.250	.750	.250	.667	.000	.500	.500	.667	.625	.750	.250	.750	.917

Counts Unlimited
PO Box 1178
Corona, CA 92878
(951) 268-6268

City of Irwindale
N/S: Irwindale Avenue
E/W: Arrow Highway
Weather: Clear

File Name : 15_IRW_Irwindale Ave_Arrow Hwy AM
Site Code : 05117366
Start Date : 5/31/2017
Page No : 2

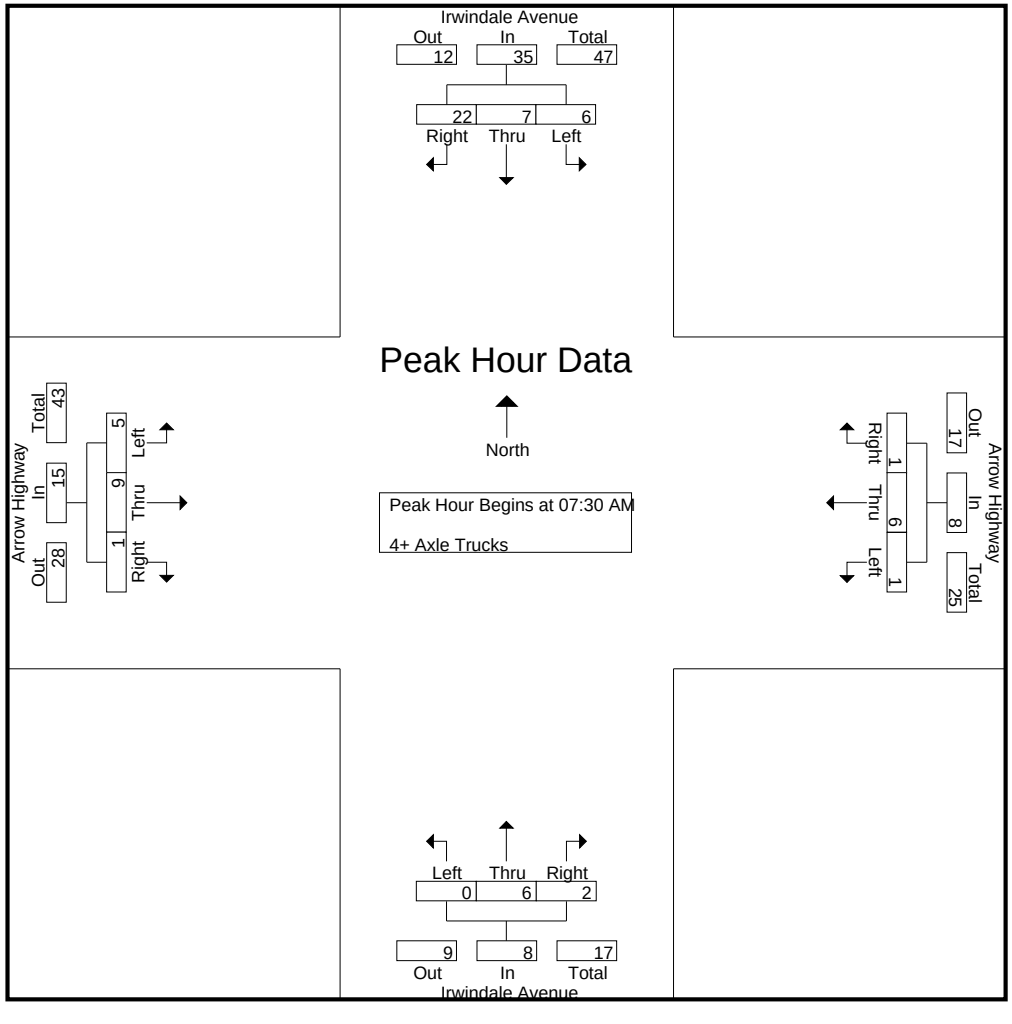

Counts Unlimited
PO Box 1178
Corona, CA 92878
(951) 268-6268

City of Irwindale
N/S: Irwindale Avenue
E/W: Arrow Highway
Weather: Clear

File Name : 15_IRW_Irwindale Ave_Arrow Hwy AM
Site Code : 05117366
Start Date : 5/31/2017
Page No : 3

	Irwindale Avenue Southbound				Arrow Highway Westbound				Irwindale Avenue Northbound				Arrow Highway Eastbound				
Start Time	Left	Thru	Right	App. Total	Left	Thru	Right	App. Total	Left	Thru	Right	App. Total	Left	Thru	Right	App. Total	Int. Total
Peak Hour Analysis From 07:30 AM to 08:15 AM - Peak 1 of 1																	
Peak Hour for Each Approach Begins at:																	
	07:30 AM				07:30 AM				07:30 AM				07:30 AM				
+0 mins.	**3**	**3**	1	7	**1**	**2**	0	**3**	0	**3**	0	**3**	**2**	**3**	0	**5**	
+15 mins.	1	1	7	9	0	1	0	1	0	0	0	0	0	1	**1**	2	
+30 mins.	1	2	6	9	0	1	**1**	2	0	2	**1**	3	1	3	0	4	
+45 mins.	1	1	**8**	**10**	0	2	0	2	0	1	1	2	2	2	0	4	
Total Volume	6	7	22	35	1	6	1	8	0	6	2	8	5	9	1	15	
% App. Total	17.1	20	62.9		12.5	75	12.5		0	75	25		33.3	60	6.7		
PHF	.500	.583	.688	.875	.250	.750	.250	.667	.000	.500	.500	.667	.625	.750	.250	.750	

Counts Unlimited
PO Box 1178
Corona, CA 92878
(951) 268-6268

City of Irwindale
N/S: Irwindale Avenue
E/W: Arrow Highway
Weather: Clear

File Name : 15_IRW_Irwindale Ave_Arrow Hwy PM
Site Code : 05117366
Start Date : 5/31/2017
Page No : 1

Groups Printed- Passenger Vehicles - Large 2 Axle Vehicles - 3 Axle Vehicles - 4+ Axle Trucks

	Irwindale Avenue Southbound					Arrow Highway Westbound					Irwindale Avenue Northbound					Arrow Highway Eastbound							
Start Time	Left	Thru	Right	RTOR	App. Total	Left	Thru	Right	RTOR	App. Total	Left	Thru	Right	RTOR	App. Total	Left	Thru	Right	RTOR	App. Total	Exclu. Total	Inclu. Total	Int. Total
04:00 PM	52	175	72	28	299	27	122	16	3	165	16	152	26	4	194	73	332	24	2	429	37	1087	1124
04:15 PM	46	159	74	32	279	21	134	12	2	167	23	114	21	5	158	93	327	20	4	440	43	1044	1087
04:30 PM	51	174	102	36	327	27	123	17	3	167	28	118	28	3	174	96	323	17	2	436	44	1104	1148
04:45 PM	51	159	77	34	287	27	116	15	2	158	14	111	22	5	147	106	338	19	1	463	42	1055	1097
Total	200	667	325	130	1192	102	495	60	10	657	81	495	97	17	673	368	1320	80	9	1768	166	4290	4456
05:00 PM	46	195	99	46	340	18	103	14	4	135	28	135	27	4	190	68	354	13	2	435	56	1100	1156
05:15 PM	43	186	85	35	314	27	133	17	2	177	21	124	23	4	168	103	300	24	2	427	43	1086	1129
05:30 PM	43	158	79	37	280	19	95	12	2	126	27	162	20	2	209	77	348	15	3	440	44	1055	1099
05:45 PM	31	162	66	33	259	21	126	6	1	153	19	95	14	2	128	101	343	17	3	461	39	1001	1040
Total	163	701	329	151	1193	85	457	49	9	591	95	516	84	12	695	349	1345	69	10	1763	182	4242	4424
Grand Total	363	1368	654	281	2385	187	952	109	19	1248	176	1011	181	29	1368	717	2665	149	19	3531	348	8532	8880
Apprch %	15.2	57.4	27.4			15	76.3	8.7			12.9	73.9	13.2			20.3	75.5	4.2					
Total %	4.3	16	7.7		28	2.2	11.2	1.3		14.6	2.1	11.8	2.1		16	8.4	31.2	1.7		41.4	3.9	96.1	
Passenger Vehicles	354	1329	600		2551	183	880	99		1178	169	984	176		1356	655	2587	140		3400	0	0	8485
% Passenger Vehicles	97.5	97.1	91.7	95.4	95.7	97.9	92.4	90.8	84.2	93	96	97.3	97.2	93.1	97.1	91.4	97.1	94	94.7	95.8	0	0	95.6
Large 2 Axle Vehicles	7	28	22		65	4	25	5		35	6	20	3		30	35	44	7		87	0	0	217
% Large 2 Axle Vehicles	1.9	2	3.4	2.8	2.4	2.1	2.6	4.6	5.3	2.8	3.4	2	1.7	3.4	2.1	4.9	1.7	4.7	5.3	2.5	0	0	2.4
3 Axle Vehicles	0	1	13		15	0	40	1		41	0	1	1		3	12	16	0		28	0	0	87
% 3 Axle Vehicles	0	0.1	2	0.4	0.6	0	4.2	0.9	0	3.2	0	0.1	0.6	3.4	0.2	1.7	0.6	0	0	0.8	0	0	1
4+ Axle Trucks	2	10	19		35	0	7	4		13	1	6	1		8	15	18	2		35	0	0	91
% 4+ Axle Trucks	0.6	0.7	2.9	1.4	1.3	0	0.7	3.7	10.5	1	0.6	0.6	0.6	0	0.6	2.1	0.7	1.3	0	1	0	0	1

	Irwindale Avenue Southbound				Arrow Highway Westbound				Irwindale Avenue Northbound				Arrow Highway Eastbound				
Start Time	Left	Thru	Right	App. Total	Left	Thru	Right	App. Total	Left	Thru	Right	App. Total	Left	Thru	Right	App. Total	Int. Total
Peak Hour Analysis From 04:00 PM to 05:45 PM - Peak 1 of 1																	
Peak Hour for Entire Intersection Begins at 04:30 PM																	
04:30 PM	**51**	174	**102**	327	**27**	123	**17**	167	**28**	118	**28**	174	96	323	17	436	**1104**
04:45 PM	51	159	77	287	27	116	15	158	14	111	22	147	**106**	338	19	**463**	1055
05:00 PM	46	**195**	99	**340**	18	103	14	135	28	**135**	27	**190**	68	**354**	13	435	1100
05:15 PM	43	186	85	314	27	**133**	17	**177**	21	124	23	168	103	300	**24**	427	1086
Total Volume	191	714	363	1268	99	475	63	637	91	488	100	679	373	1315	73	1761	4345
% App. Total	15.1	56.3	28.6		15.5	74.6	9.9		13.4	71.9	14.7		21.2	74.7	4.1		
PHF	.936	.915	.890	.932	.917	.893	.926	.900	.813	.904	.893	.893	.880	.929	.760	.951	.984

Counts Unlimited
PO Box 1178
Corona, CA 92878
(951) 268-6268

City of Irwindale
N/S: Irwindale Avenue
E/W: Arrow Highway
Weather: Clear

File Name : 15_IRW_Irwindale Ave_Arrow Hwy PM
Site Code : 05117366
Start Date : 5/31/2017
Page No : 2

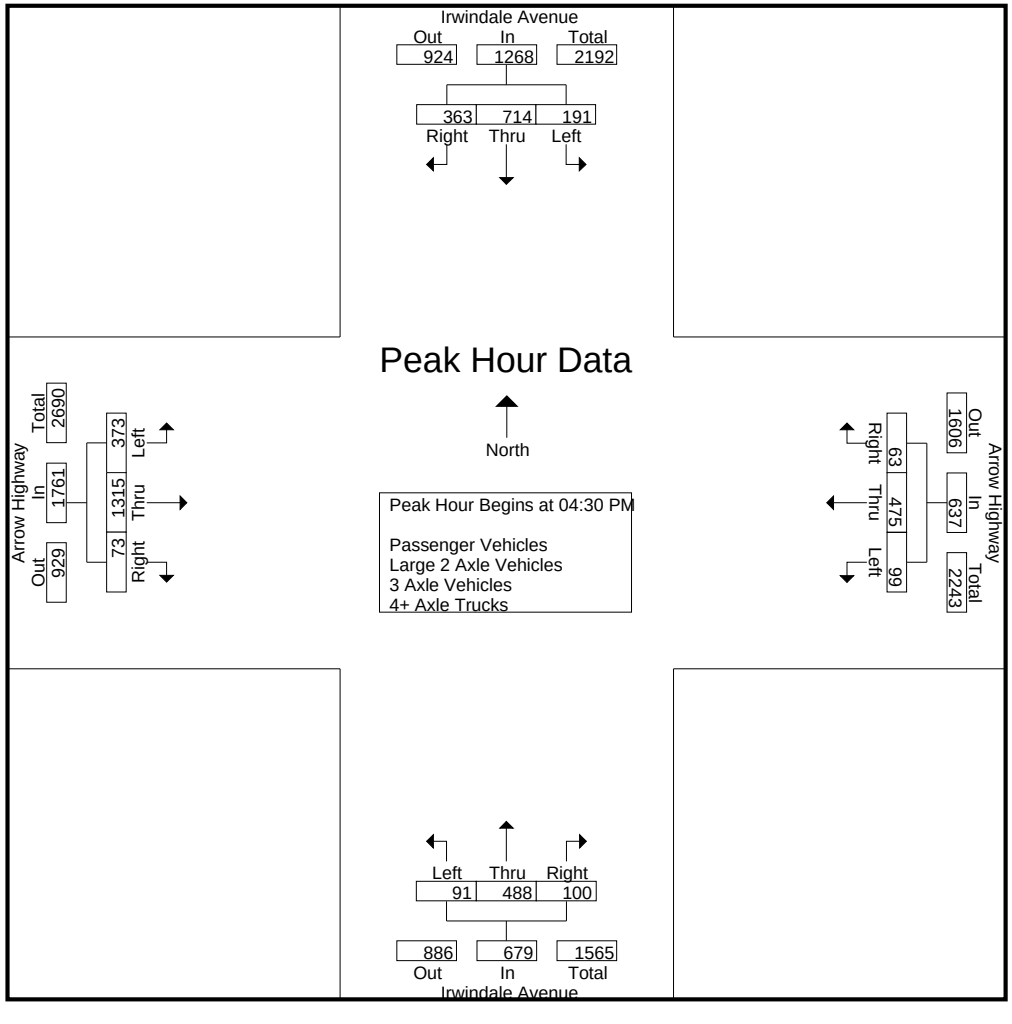

Counts Unlimited
PO Box 1178
Corona, CA 92878
(951) 268-6268

City of Irwindale
N/S: Irwindale Avenue
E/W: Arrow Highway
Weather: Clear

File Name : 15_IRW_Irwindale Ave_Arrow Hwy PM
Site Code : 05117366
Start Date : 5/31/2017
Page No : 3

	Irwindale Avenue Southbound				Arrow Highway Westbound				Irwindale Avenue Northbound				Arrow Highway Eastbound				
Start Time	Left	Thru	Right	App. Total	Left	Thru	Right	App. Total	Left	Thru	Right	App. Total	Left	Thru	Right	App. Total	Int. Total
Peak Hour Analysis From 04:00 PM to 05:45 PM - Peak 1 of 1																	
Peak Hour for Each Approach Begins at:																	
	04:30 PM				04:00 PM				04:45 PM				04:15 PM				
+0 mins.	**51**	174	**102**	327	**27**	122	16	165	14	111	22	147	93	327	**20**	440	
+15 mins.	51	159	77	287	21	**134**	12	**167**	**28**	135	**27**	190	96	323	17	436	
+30 mins.	46	**195**	99	**340**	27	123	**17**	167	21	124	23	168	**106**	338	19	**463**	
+45 mins.	43	186	85	314	27	116	15	158	27	**162**	20	**209**	68	**354**	13	435	
Total Volume	191	714	363	1268	102	495	60	657	90	532	92	714	363	1342	69	1774	
% App. Total	15.1	56.3	28.6		15.5	75.3	9.1		12.6	74.5	12.9		20.5	75.6	3.9		
PHF	.936	.915	.890	.932	.944	.924	.882	.984	.804	.821	.852	.854	.856	.948	.863	.958	

Counts Unlimited
PO Box 1178
Corona, CA 92878
(951) 268-6268

City of Irwindale
N/S: Irwindale Avenue
E/W: Arrow Highway
Weather: Clear

File Name : 15_IRW_Irwindale Ave_Arrow Hwy PM
Site Code : 05117366
Start Date : 5/31/2017
Page No : 1

Groups Printed- Passenger Vehicles

	Irwindale Avenue Southbound					Arrow Highway Westbound					Irwindale Avenue Northbound					Arrow Highway Eastbound							
Start Time	Left	Thru	Right	RTOR	App. Total	Left	Thru	Right	RTOR	App. Total	Left	Thru	Right	RTOR	App. Total	Left	Thru	Right	RTOR	App. Total	Exclu. Total	Inclu. Total	Int. Total
04:00 PM	51	171	60	27	282	27	117	15	2	159	15	146	24	3	185	61	310	22	2	393	34	1019	1053
04:15 PM	43	154	65	31	262	20	124	8	1	152	21	109	20	4	150	83	312	18	3	413	39	977	1016
04:30 PM	48	167	97	36	312	26	106	15	3	147	27	115	28	3	170	91	318	15	2	424	44	1053	1097
04:45 PM	51	157	72	32	280	26	107	14	2	147	14	109	22	5	145	100	330	18	1	448	40	1020	1060
Total	193	649	294	126	1136	99	454	52	8	605	77	479	94	15	650	335	1270	73	8	1678	157	4069	4226
05:00 PM	44	188	93	44	325	18	93	14	4	125	27	132	26	4	185	53	344	13	2	410	54	1045	1099
05:15 PM	43	182	77	31	302	26	125	17	2	168	21	122	23	4	166	97	297	23	2	417	39	1053	1092
05:30 PM	43	151	75	36	269	19	88	10	1	117	25	158	19	2	202	72	345	15	3	432	42	1020	1062
05:45 PM	31	159	61	31	251	21	120	6	1	147	19	93	14	2	126	98	331	16	3	445	37	969	1006
Total	161	680	306	142	1147	84	426	47	8	557	92	505	82	12	679	320	1317	67	10	1704	172	4087	4259
Grand Total	354	1329	600	268	2283	183	880	99	16	1162	169	984	176	27	1329	655	2587	140	18	3382	329	8156	8485
Apprch %	15.5	58.2	26.3			15.7	75.7	8.5			12.7	74	13.2			19.4	76.5	4.1					
Total %	4.3	16.3	7.4		28	2.2	10.8	1.2		14.2	2.1	12.1	2.2		16.3	8	31.7	1.7		41.5	3.9	96.1	

	Irwindale Avenue Southbound				Arrow Highway Westbound				Irwindale Avenue Northbound				Arrow Highway Eastbound				
Start Time	Left	Thru	Right	App. Total	Left	Thru	Right	App. Total	Left	Thru	Right	App. Total	Left	Thru	Right	App. Total	Int. Total
Peak Hour Analysis From 04:30 PM to 05:15 PM - Peak 1 of 1																	
Peak Hour for Entire Intersection Begins at 04:30 PM																	
04:30 PM	48	167	**97**	312	**26**	106	15	147	**27**	115	**28**	170	91	318	15	424	**1053**
04:45 PM	**51**	157	72	280	26	107	14	147	14	109	22	145	**100**	330	18	**448**	1020
05:00 PM	44	**188**	93	**325**	18	93	14	125	27	**132**	26	**185**	53	**344**	13	410	1045
05:15 PM	43	182	77	302	26	**125**	**17**	**168**	21	122	23	166	97	297	**23**	417	1053
Total Volume	186	694	339	1219	96	431	60	587	89	478	99	666	341	1289	69	1699	4171
% App. Total	15.3	56.9	27.8		16.4	73.4	10.2		13.4	71.8	14.9		20.1	75.9	4.1		
PHF	.912	.923	.874	.938	.923	.862	.882	.874	.824	.905	.884	.900	.853	.937	.750	.948	.990

Counts Unlimited
PO Box 1178
Corona, CA 92878
(951) 268-6268

City of Irwindale
N/S: Irwindale Avenue
E/W: Arrow Highway
Weather: Clear

File Name : 15_IRW_Irwindale Ave_Arrow Hwy PM
Site Code : 05117366
Start Date : 5/31/2017
Page No : 2

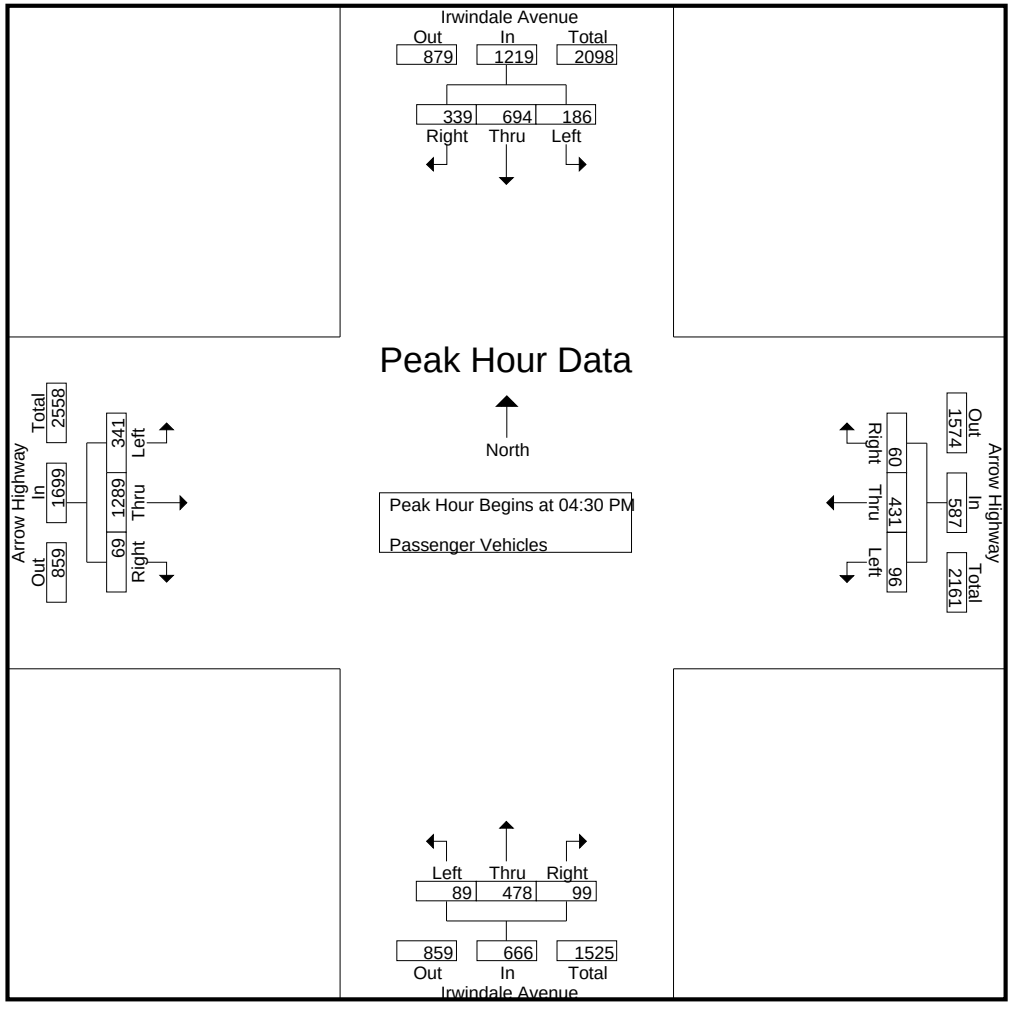

Counts Unlimited
PO Box 1178
Corona, CA 92878
(951) 268-6268

City of Irwindale
N/S: Irwindale Avenue
E/W: Arrow Highway
Weather: Clear

File Name : 15_IRW_Irwindale Ave_Arrow Hwy PM
Site Code : 05117366
Start Date : 5/31/2017
Page No : 3

	Irwindale Avenue Southbound				Arrow Highway Westbound				Irwindale Avenue Northbound				Arrow Highway Eastbound				
Start Time	Left	Thru	Right	App. Total	Left	Thru	Right	App. Total	Left	Thru	Right	App. Total	Left	Thru	Right	App. Total	Int. Total
Peak Hour Analysis From 04:30 PM to 05:15 PM - Peak 1 of 1																	
Peak Hour for Each Approach Begins at:																	
	04:30 PM				04:30 PM				04:30 PM				04:30 PM				
+0 mins.	48	167	**97**	312	**26**	106	15	147	**27**	115	**28**	170	91	318	15	424	
+15 mins.	**51**	157	72	280	26	107	14	147	14	109	22	145	**100**	330	18	**448**	
+30 mins.	44	**188**	93	**325**	18	93	14	125	27	**132**	26	**185**	53	**344**	13	410	
+45 mins.	43	182	77	302	26	**125**	**17**	**168**	21	122	23	166	97	297	**23**	417	
Total Volume	186	694	339	1219	96	431	60	587	89	478	99	666	341	1289	69	1699	
% App. Total	15.3	56.9	27.8		16.4	73.4	10.2		13.4	71.8	14.9		20.1	75.9	4.1		
PHF	.912	.923	.874	.938	.923	.862	.882	.874	.824	.905	.884	.900	.853	.937	.750	.948	

Counts Unlimited
PO Box 1178
Corona, CA 92878
(951) 268-6268

City of Irwindale
N/S: Irwindale Avenue
E/W: Arrow Highway
Weather: Clear

File Name : 15_IRW_Irwindale Ave_Arrow Hwy PM
Site Code : 05117366
Start Date : 5/31/2017
Page No : 1

Groups Printed- Large 2 Axle Vehicles

	Irwindale Avenue Southbound					Arrow Highway Westbound					Irwindale Avenue Northbound					Arrow Highway Eastbound							
Start Time	Left	Thru	Right	RTOR	App. Total	Left	Thru	Right	RTOR	App. Total	Left	Thru	Right	RTOR	App. Total	Left	Thru	Right	RTOR	App. Total	Exclu. Total	Inclu. Total	Int. Total
04:00 PM	1	2	4	1	7	0	1	1	1	2	1	4	1	0	6	6	11	1	0	18	2	33	35
04:15 PM	2	5	3	1	10	1	2	1	0	4	2	3	1	1	6	4	7	2	1	13	3	33	36
04:30 PM	3	4	1	0	8	1	9	2	0	12	0	3	0	0	3	3	4	2	0	9	0	32	32
04:45 PM	0	2	3	1	5	1	1	0	0	2	0	2	0	0	2	3	3	0	0	6	1	15	16
Total	6	13	11	3	30	3	13	4	1	20	3	12	2	1	17	16	25	5	1	46	6	113	119
05:00 PM	1	5	4	2	10	0	3	0	0	3	1	3	1	0	5	12	6	0	0	18	2	36	38
05:15 PM	0	3	5	2	8	1	5	0	0	6	0	0	0	0	0	3	3	1	0	7	2	21	23
05:30 PM	0	4	0	0	4	0	1	1	0	2	2	4	0	0	6	3	0	0	0	3	0	15	15
05:45 PM	0	3	2	1	5	0	3	0	0	3	0	1	0	0	1	1	10	1	0	12	1	21	22
Total	1	15	11	5	27	1	12	1	0	14	3	8	1	0	12	19	19	2	0	40	5	93	98
Grand Total	7	28	22	8	57	4	25	5	1	34	6	20	3	1	29	35	44	7	1	86	11	206	217
Apprch %	12.3	49.1	38.6			11.8	73.5	14.7			20.7	69	10.3			40.7	51.2	8.1					
Total %	3.4	13.6	10.7		27.7	1.9	12.1	2.4		16.5	2.9	9.7	1.5		14.1	17	21.4	3.4		41.7	5.1	94.9	

	Irwindale Avenue Southbound				Arrow Highway Westbound				Irwindale Avenue Northbound				Arrow Highway Eastbound				
Start Time	Left	Thru	Right	App. Total	Left	Thru	Right	App. Total	Left	Thru	Right	App. Total	Left	Thru	Right	App. Total	Int. Total
Peak Hour Analysis From 04:30 PM to 05:15 PM - Peak 1 of 1																	
Peak Hour for Entire Intersection Begins at 04:30 PM																	
04:30 PM	**3**	4	1	8	**1**	**9**	**2**	**12**	0	**3**	0	3	3	4	**2**	9	32
04:45 PM	0	2	3	5	1	1	0	2	0	2	0	2	3	3	0	6	15
05:00 PM	1	**5**	4	**10**	0	3	0	3	**1**	3	**1**	**5**	**12**	**6**	0	**18**	**36**
05:15 PM	0	3	**5**	8	1	5	0	6	0	0	0	0	3	3	1	7	21
Total Volume	4	14	13	31	3	18	2	23	1	8	1	10	21	16	3	40	104
% App. Total	12.9	45.2	41.9		13	78.3	8.7		10	80	10		52.5	40	7.5		
PHF	.333	.700	.650	.775	.750	.500	.250	.479	.250	.667	.250	.500	.438	.667	.375	.556	.722

Counts Unlimited
PO Box 1178
Corona, CA 92878
(951) 268-6268

City of Irwindale
N/S: Irwindale Avenue
E/W: Arrow Highway
Weather: Clear

File Name : 15_IRW_Irwindale Ave_Arrow Hwy PM
Site Code : 05117366
Start Date : 5/31/2017
Page No : 2

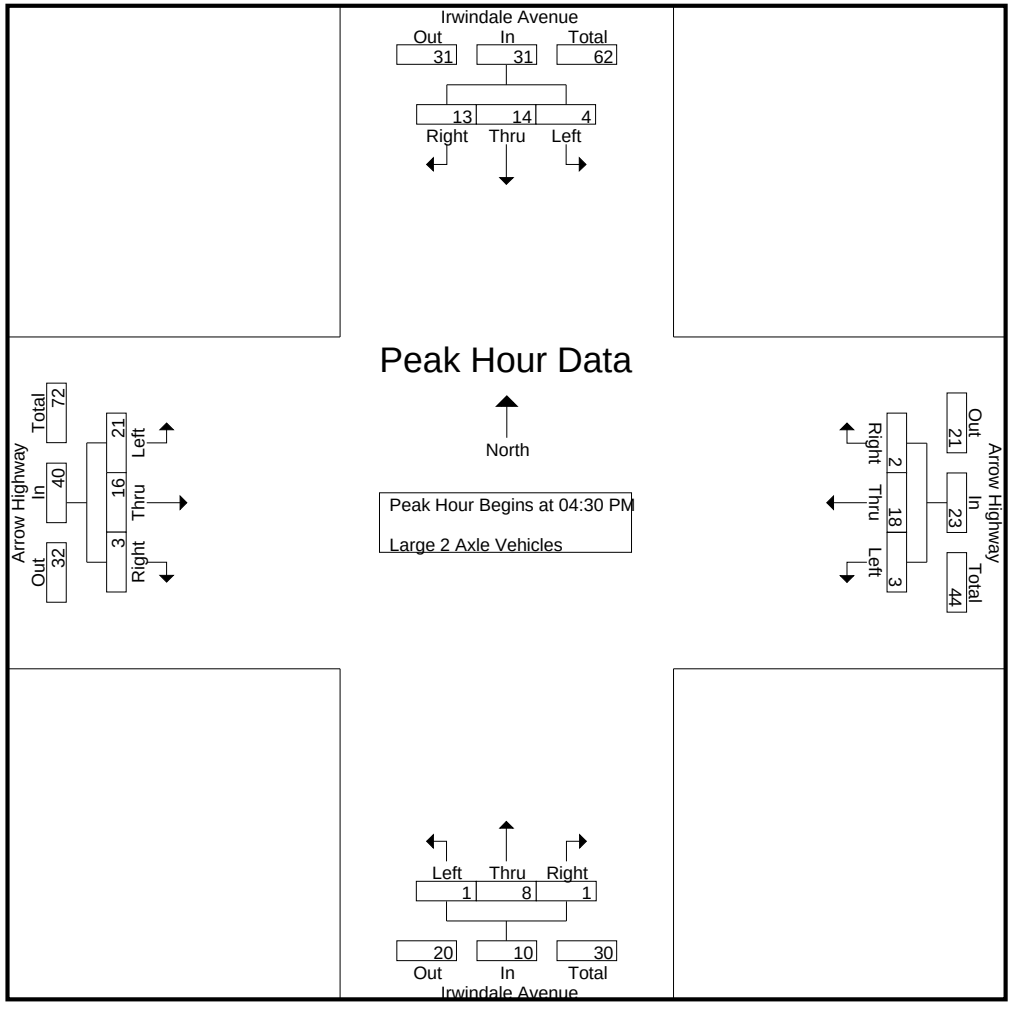

Counts Unlimited
PO Box 1178
Corona, CA 92878
(951) 268-6268

City of Irwindale
N/S: Irwindale Avenue
E/W: Arrow Highway
Weather: Clear

File Name : 15_IRW_Irwindale Ave_Arrow Hwy PM
Site Code : 05117366
Start Date : 5/31/2017
Page No : 3

	Irwindale Avenue Southbound				Arrow Highway Westbound				Irwindale Avenue Northbound				Arrow Highway Eastbound				
Start Time	Left	Thru	Right	App. Total	Left	Thru	Right	App. Total	Left	Thru	Right	App. Total	Left	Thru	Right	App. Total	Int. Total
Peak Hour Analysis From 04:30 PM to 05:15 PM - Peak 1 of 1																	
Peak Hour for Each Approach Begins at:																	
	04:30 PM				04:30 PM				04:30 PM				04:30 PM				
+0 mins.	**3**	4	1	8	**1**	**9**	**2**	**12**	0	**3**	0	3	3	4	**2**	9	
+15 mins.	0	2	3	5	1	1	0	2	0	2	0	2	3	3	0	6	
+30 mins.	1	**5**	4	**10**	0	3	0	3	**1**	3	**1**	**5**	**12**	**6**	0	**18**	
+45 mins.	0	3	**5**	8	1	5	0	6	0	0	0	0	3	3	1	7	
Total Volume	4	14	13	31	3	18	2	23	1	8	1	10	21	16	3	40	
% App. Total	12.9	45.2	41.9		13	78.3	8.7		10	80	10		52.5	40	7.5		
PHF	.333	.700	.650	.775	.750	.500	.250	.479	.250	.667	.250	.500	.438	.667	.375	.556	

Counts Unlimited
PO Box 1178
Corona, CA 92878
(951) 268-6268

City of Irwindale
N/S: Irwindale Avenue
E/W: Arrow Highway
Weather: Clear

File Name : 15_IRW_Irwindale Ave_Arrow Hwy PM
Site Code : 05117366
Start Date : 5/31/2017
Page No : 1

Groups Printed- 3 Axle Vehicles

	Irwindale Avenue Southbound					Arrow Highway Westbound					Irwindale Avenue Northbound					Arrow Highway Eastbound							
Start Time	Left	Thru	Right	RTOR	App. Total	Left	Thru	Right	RTOR	App. Total	Left	Thru	Right	RTOR	App. Total	Left	Thru	Right	RTOR	App. Total	Exclu. Total	Inclu. Total	Int. Total
04:00 PM	0	0	4	0	4	0	2	0	0	2	0	0	1	1	1	4	5	0	0	9	1	16	17
04:15 PM	0	0	2	0	2	0	7	1	0	8	0	1	0	0	1	3	4	0	0	7	0	18	18
04:30 PM	0	1	3	0	4	0	6	0	0	6	0	0	0	0	0	1	0	0	0	1	0	11	11
04:45 PM	0	0	1	0	1	0	8	0	0	8	0	0	0	0	0	1	2	0	0	3	0	12	12
Total	0	1	10	0	11	0	23	1	0	24	0	1	1	1	2	9	11	0	0	20	1	57	58
05:00 PM	0	0	1	0	1	0	5	0	0	5	0	0	0	0	0	1	2	0	0	3	0	9	9
05:15 PM	0	0	1	1	1	0	3	0	0	3	0	0	0	0	0	1	0	0	0	1	1	5	6
05:30 PM	0	0	1	0	1	0	6	0	0	6	0	0	0	0	0	0	1	0	0	1	0	8	8
05:45 PM	0	0	0	0	0	0	3	0	0	3	0	0	0	0	0	1	2	0	0	3	0	6	6
Total	0	0	3	1	3	0	17	0	0	17	0	0	0	0	0	3	5	0	0	8	1	28	29
Grand Total	0	1	13	1	14	0	40	1	0	41	0	1	1	1	2	12	16	0	0	28	2	85	87
Apprch %	0	7.1	92.9			0	97.6	2.4			0	50	50			42.9	57.1	0					
Total %	0	1.2	15.3		16.5	0	47.1	1.2		48.2	0	1.2	1.2		2.4	14.1	18.8	0		32.9	2.3	97.7	

	Irwindale Avenue Southbound				Arrow Highway Westbound				Irwindale Avenue Northbound				Arrow Highway Eastbound				
Start Time	Left	Thru	Right	App. Total	Left	Thru	Right	App. Total	Left	Thru	Right	App. Total	Left	Thru	Right	App. Total	Int. Total
Peak Hour Analysis From 04:30 PM to 05:15 PM - Peak 1 of 1																	
Peak Hour for Entire Intersection Begins at 04:30 PM																	
04:30 PM	0	**1**	**3**	**4**	0	6	0	6	0	0	0	0	**1**	0	0	1	11
04:45 PM	0	0	1	1	0	**8**	0	**8**	0	0	0	0	1	**2**	0	**3**	**12**
05:00 PM	0	0	1	1	0	5	0	5	0	0	0	0	1	2	0	3	9
05:15 PM	0	0	1	1	0	3	0	3	0	0	0	0	1	0	0	1	5
Total Volume	0	1	6	7	0	22	0	22	0	0	0	0	4	4	0	8	37
% App. Total	0	14.3	85.7		0	100	0		0	0	0		50	50	0		
PHF	.000	.250	.500	.438	.000	.688	.000	.688	.000	.000	.000	.000	1.00	.500	.000	.667	.771

Counts Unlimited
PO Box 1178
Corona, CA 92878
(951) 268-6268

City of Irwindale
N/S: Irwindale Avenue
E/W: Arrow Highway
Weather: Clear

File Name : 15_IRW_Irwindale Ave_Arrow Hwy PM
Site Code : 05117366
Start Date : 5/31/2017
Page No : 2

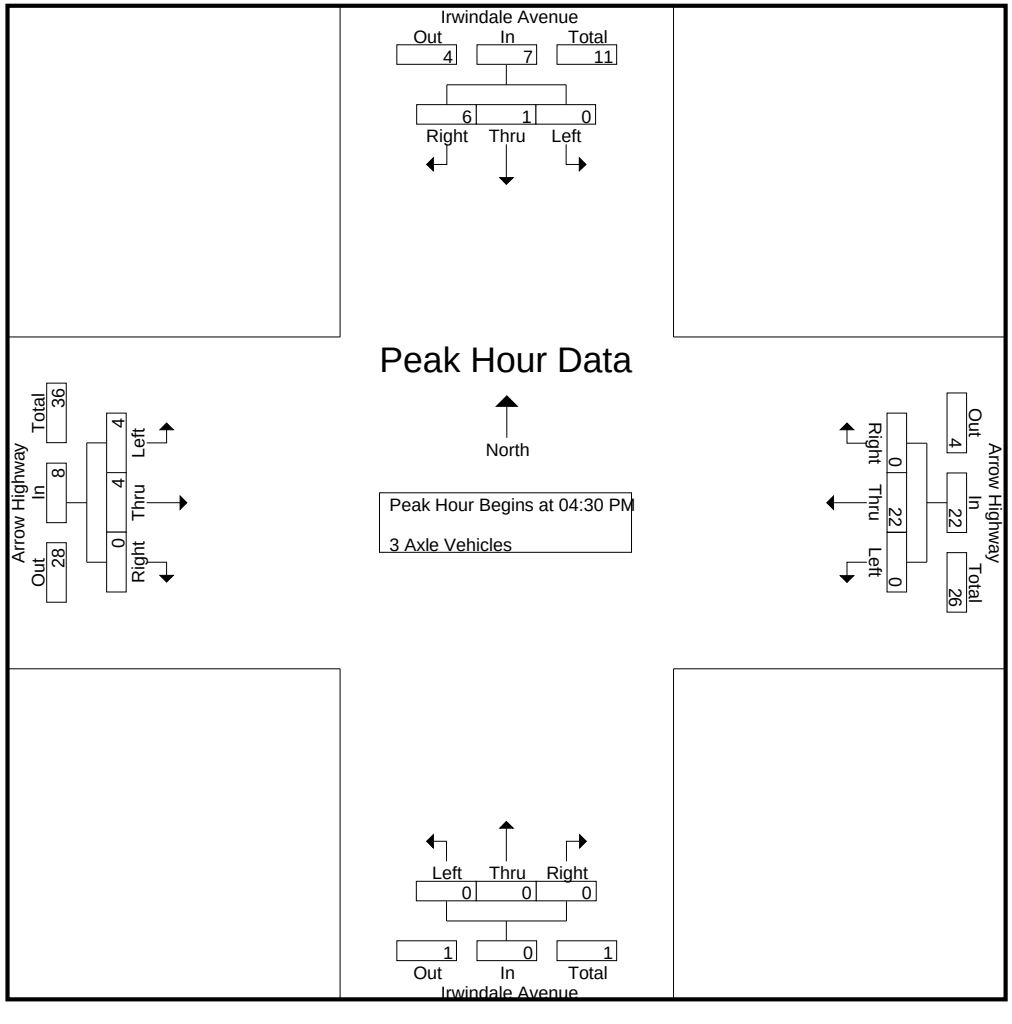

Counts Unlimited
PO Box 1178
Corona, CA 92878
(951) 268-6268

City of Irwindale
N/S: Irwindale Avenue
E/W: Arrow Highway
Weather: Clear

File Name : 15_IRW_Irwindale Ave_Arrow Hwy PM
Site Code : 05117366
Start Date : 5/31/2017

	Irwindale Avenue Southbound				Arrow Highway Westbound				Irwindale Avenue Northbound				Arrow Highway Eastbound				
Start Time	Left	Thru	Right	App. Total	Left	Thru	Right	App. Total	Left	Thru	Right	App. Total	Left	Thru	Right	App. Total	Int. Total
Peak Hour Analysis From 04:30 PM to 05:15 PM - Peak 1 of 1																	
Peak Hour for Each Approach Begins at:																	
	04:30 PM				04:30 PM				04:30 PM				04:30 PM				
+0 mins.	0	**1**	**3**	**4**	0	6	0	6	0	0	0	0	**1**	0	0	1	
+15 mins.	0	0	1	1	0	**8**	0	**8**	0	0	0	0	1	**2**	0	**3**	
+30 mins.	0	0	1	1	0	5	0	5	0	0	0	0	1	2	0	3	
+45 mins.	0	0	1	1	0	3	0	3	0	0	0	0	1	0	0	1	
Total Volume	0	1	6	7	0	22	0	22	0	0	0	0	4	4	0	8	
% App. Total	0	14.3	85.7		0	100	0		0	0	0		50	50	0		
PHF	.000	.250	.500	.438	.000	.688	.000	.688	.000	.000	.000	.000	1.000	.500	.000	.667	

Counts Unlimited
PO Box 1178
Corona, CA 92878
(951) 268-6268

City of Irwindale
N/S: Irwindale Avenue
E/W: Arrow Highway
Weather: Clear

File Name : 15_IRW_Irwindale Ave_Arrow Hwy PM
Site Code : 05117366
Start Date : 5/31/2017
Page No : 1

Groups Printed- 4+ Axle Trucks

	Irwindale Avenue Southbound					Arrow Highway Westbound					Irwindale Avenue Northbound					Arrow Highway Eastbound							
Start Time	Left	Thru	Right	RTOR	App. Total	Left	Thru	Right	RTOR	App. Total	Left	Thru	Right	RTOR	App. Total	Left	Thru	Right	RTOR	App. Total	Exclu. Total	Inclu. Total	Int. Total
04:00 PM	0	2	4	0	6	0	2	0	0	2	0	2	0	0	2	2	6	1	0	9	0	19	19
04:15 PM	1	0	4	0	5	0	1	2	1	3	0	1	0	0	1	3	4	0	0	7	1	16	17
04:30 PM	0	2	1	0	3	0	2	0	0	2	1	0	0	0	1	1	1	0	0	2	0	8	8
04:45 PM	0	0	1	1	1	0	0	1	0	1	0	0	0	0	0	2	3	1	0	6	1	8	9
Total	1	4	10	1	15	0	5	3	1	8	1	3	0	0	4	8	14	2	0	24	2	51	53
05:00 PM	1	2	1	0	4	0	2	0	0	2	0	0	0	0	0	2	2	0	0	4	0	10	10
05:15 PM	0	1	2	1	3	0	0	0	0	0	0	2	0	0	2	2	0	0	0	2	1	7	8
05:30 PM	0	3	3	1	6	0	0	1	1	1	0	0	1	0	1	2	2	0	0	4	2	12	14
05:45 PM	0	0	3	1	3	0	0	0	0	0	0	1	0	0	1	1	0	0	0	1	1	5	6
Total	1	6	9	3	16	0	2	1	1	3	0	3	1	0	4	7	4	0	0	11	4	34	38
Grand Total	2	10	19	4	31	0	7	4	2	11	1	6	1	0	8	15	18	2	0	35	6	85	91
Apprch %	6.5	32.3	61.3			0	63.6	36.4			12.5	75	12.5			42.9	51.4	5.7					
Total %	2.4	11.8	22.4		36.5	0	8.2	4.7		12.9	1.2	7.1	1.2		9.4	17.6	21.2	2.4		41.2	6.6	93.4	

	Irwindale Avenue Southbound				Arrow Highway Westbound				Irwindale Avenue Northbound				Arrow Highway Eastbound				
Start Time	Left	Thru	Right	App. Total	Left	Thru	Right	App. Total	Left	Thru	Right	App. Total	Left	Thru	Right	App. Total	Int. Total
Peak Hour Analysis From 04:30 PM to 05:15 PM - Peak 1 of 1																	
Peak Hour for Entire Intersection Begins at 04:30 PM																	
04:30 PM	0	**2**	1	3	0	**2**	0	**2**	**1**	0	0	1	1	1	0	2	8
04:45 PM	0	0	1	1	0	0	**1**	1	0	0	0	0	**2**	**3**	**1**	**6**	8
05:00 PM	**1**	2	1	**4**	0	2	0	2	0	0	0	0	2	2	0	4	**10**
05:15 PM	0	1	**2**	3	0	0	0	0	0	**2**	0	**2**	2	0	0	2	7
Total Volume	1	5	5	11	0	4	1	5	1	2	0	3	7	6	1	14	33
% App. Total	9.1	45.5	45.5		0	80	20		33.3	66.7	0		50	42.9	7.1		
PHF	.250	.625	.625	.688	.000	.500	.250	.625	.250	.250	.000	.375	.875	.500	.250	.583	.825

Counts Unlimited
PO Box 1178
Corona, CA 92878
(951) 268-6268

City of Irwindale
N/S: Irwindale Avenue
E/W: Arrow Highway
Weather: Clear

File Name : 15_IRW_Irwindale Ave_Arrow Hwy PM
Site Code : 05117366
Start Date : 5/31/2017
Page No : 2

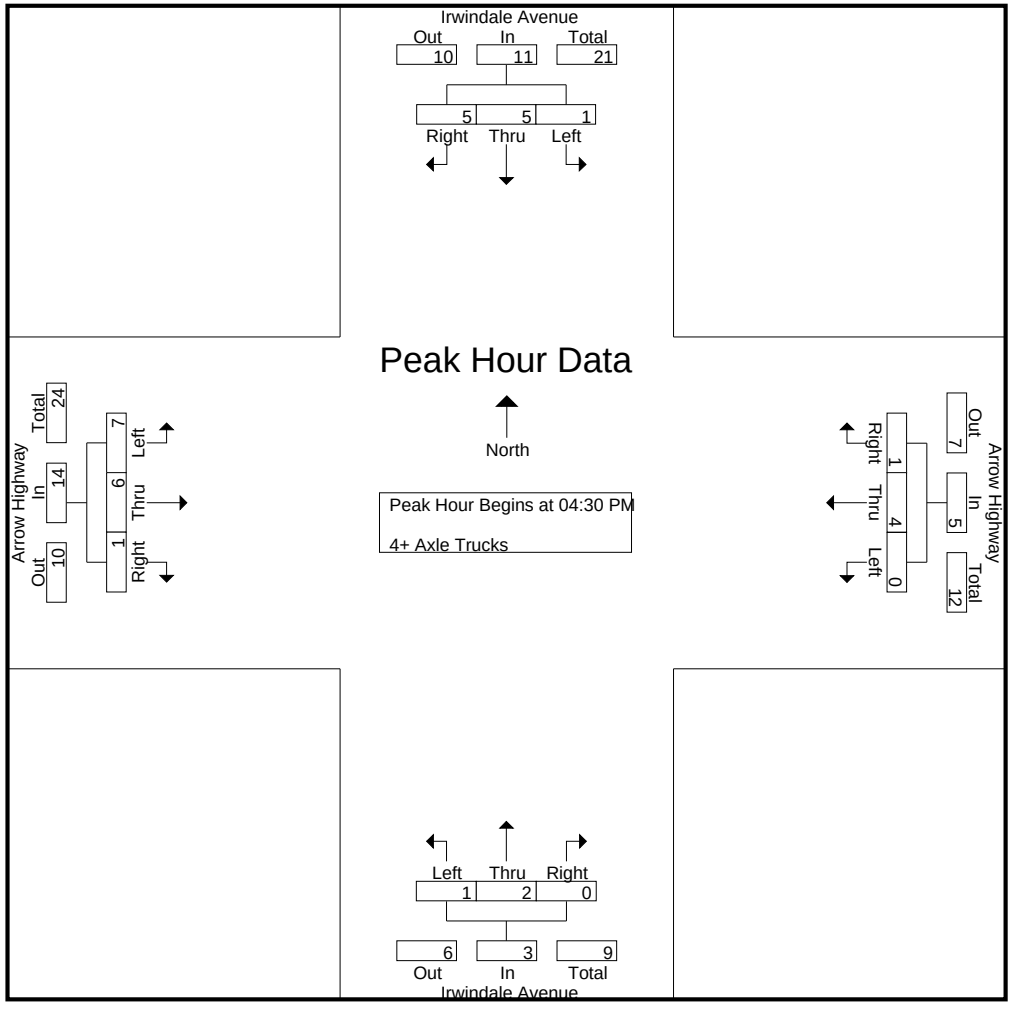

Counts Unlimited
PO Box 1178
Corona, CA 92878
(951) 268-6268

City of Irwindale
N/S: Irwindale Avenue
E/W: Arrow Highway
Weather: Clear

File Name : 15_IRW_Irwindale Ave_Arrow Hwy PM
Site Code : 05117366
Start Date : 5/31/2017
Page No : 3

	Irwindale Avenue Southbound				Arrow Highway Westbound				Irwindale Avenue Northbound				Arrow Highway Eastbound				
Start Time	Left	Thru	Right	App. Total	Left	Thru	Right	App. Total	Left	Thru	Right	App. Total	Left	Thru	Right	App. Total	Int. Total
Peak Hour Analysis From 04:30 PM to 05:15 PM - Peak 1 of 1																	
Peak Hour for Each Approach Begins at:																	
	04:30 PM				04:30 PM				04:30 PM				04:30 PM				
+0 mins.	0	**2**	1	3	0	**2**	0	**2**	**1**	0	0	1	1	1	0	2	
+15 mins.	0	0	1	1	0	0	**1**	1	0	0	0	0	**2**	**3**	**1**	**6**	
+30 mins.	**1**	2	1	**4**	0	2	0	2	0	0	0	0	2	2	0	4	
+45 mins.	0	1	**2**	3	0	0	0	0	0	**2**	0	**2**	2	0	0	2	
Total Volume	1	5	5	11	0	4	1	5	1	2	0	3	7	6	1	14	
% App. Total	9.1	45.5	45.5		0	80	20		33.3	66.7	0		50	42.9	7.1		
PHF	.250	.625	.625	.688	.000	.500	.250	.625	.250	.250	.000	.375	.875	.500	.250	.583	

Location: Irwindale
N/S: Irwindale Avenue
E/W: Arrow Highway

Date: 5/31/2017
Day: Wednesday

PEDESTRIANS

	North Leg Irwindale Avenue	East Leg Arrow Highway	South Leg Irwindale Avenue	West Leg Arrow Highway	TOTAL
7:00 AM	1	2	0	0	3
7:15 AM	3	0	1	2	6
7:30 AM	2	9	0	0	11
7:45 AM	3	0	2	1	6
8:00 AM	6	5	1	0	12
8:15 AM	2	1	1	1	5
8:30 AM	0	0	4	1	5
8:45 AM	3	0	2	2	7
TOTAL VOLUMES:	20	17	11	7	55

	North Leg Irwindale Avenue	East Leg Arrow Highway	South Leg Irwindale Avenue	West Leg Arrow Highway	TOTAL
4:00 PM	2	1	0	0	3
4:15 PM	2	2	2	1	7
4:30 PM	3	1	1	0	5
4:45 PM	2	2	3	5	12
5:00 PM	2	5	2	1	10
5:15 PM	2	2	1	6	11
5:30 PM	0	0	0	2	2
5:45 PM	5	3	2	1	11
TOTAL VOLUMES:	18	16	11	16	61

Counts Unlimited
P.O. Box 1178
Corona, CA 92878
(951) 268-6268

Location: Irwindale
N/S: Irwindale Avenue
E/W: Arrow Highway

Date: 5/31/2017
Day: Wednesday

BICYCLES

	North Leg Irwindale Avenue	East Leg Arrow Highway	South Leg Irwindale Avenue	West Leg Arrow Highway	TOTAL
7:00 AM	0	1	0	0	1
7:15 AM	0	0	0	0	0
7:30 AM	0	0	0	0	0
7:45 AM	0	1	0	0	1
8:00 AM	0	0	0	1	1
8:15 AM	1	0	0	0	1
8:30 AM	1	1	1	1	4
8:45 AM	0	0	0	1	1
TOTAL VOLUMES:	2	3	1	3	9

	North Leg Irwindale Avenue	East Leg Arrow Highway	South Leg Irwindale Avenue	West Leg Arrow Highway	TOTAL
4:00 PM	0	1	0	0	1
4:15 PM	0	0	1	0	1
4:30 PM	1	1	0	1	3
4:45 PM	1	0	2	0	3
5:00 PM	0	0	0	0	0
5:15 PM	0	0	0	0	0
5:30 PM	0	0	0	0	0
5:45 PM	1	1	0	0	2
TOTAL VOLUMES:	3	3	3	1	10

Counts Unlimited
P.O. Box 1178
Corona, CA 92878
(951) 268-6268

Counts Unlimited
PO Box 1178
Corona, CA 92878
(951) 268-6268

City of Azusa
N/S: South Vincent Avenue
E/W: West Gladstone Street
Weather: Clear

File Name : 17_AZU_Vincent_Gladstone AM
Site Code : 05117366
Start Date : 5/31/2017
Page No : 1

Groups Printed- Passenger Vehicles - Large 2 Axle Vehicles - 3 Axle Vehicles - 4+ Axle Trucks

	South Vincent Avenue Southbound					West Gladstone Street Westbound					South Vincent Avenue Northbound					West Gladstone Street Eastbound							
Start Time	Left	Thru	Right	RTOR	App. Total	Left	Thru	Right	RTOR	App. Total	Left	Thru	Right	RTOR	App. Total	Left	Thru	Right	RTOR	App. Total	Exclu. Total	Inclu. Total	Int. Total
07:00 AM	2	3	5	2	10	32	310	0	0	342	79	7	25	9	111	12	22	20	1	54	12	517	529
07:15 AM	8	2	11	2	21	42	233	0	0	275	60	6	33	15	99	10	15	9	1	34	18	429	447
07:30 AM	4	2	15	2	21	56	202	2	0	260	67	3	27	19	97	5	19	19	7	43	28	421	449
07:45 AM	2	1	7	2	10	48	197	0	0	245	59	13	62	21	134	16	41	16	0	73	23	462	485
Total	16	8	38	8	62	178	942	2	0	1122	265	29	147	64	441	43	97	64	9	204	81	1829	1910
08:00 AM	3	2	18	0	23	49	172	0	0	221	53	2	41	17	96	20	38	20	1	78	18	418	436
08:15 AM	9	2	12	0	23	26	153	4	0	183	38	7	43	24	88	19	26	23	4	68	28	362	390
08:30 AM	12	2	19	0	33	36	123	1	0	160	46	14	33	11	93	17	28	16	2	61	13	347	360
08:45 AM	10	3	11	0	24	31	93	4	0	128	30	6	32	13	68	13	23	19	4	55	17	275	292
Total	34	9	60	0	103	142	541	9	0	692	167	29	149	65	345	69	115	78	11	262	76	1402	1478
Grand Total	50	17	98	8	165	320	1483	11	0	1814	432	58	296	129	786	112	212	142	20	466	157	3231	3388
Apprch %	30.3	10.3	59.4			17.6	81.8	0.6			55	7.4	37.7			24	45.5	30.5					
Total %	1.5	0.5	3		5.1	9.9	45.9	0.3		56.1	13.4	1.8	9.2		24.3	3.5	6.6	4.4		14.4	4.6	95.4	
Passenger Vehicles	5	6	7		20	300	1448	4		1752	358	22	276		779	11	192	101		319	0	0	2870
% Passenger Vehicles	10	35.3	7.1	25	11.6	93.8	97.6	36.4	0	96.6	82.9	37.9	93.2	95.3	85.1	9.8	90.6	71.1	75	65.6	0	0	84.7
Large 2 Axle Vehicles	0	1	3		4	10	24	1		35	15	2	14		35	3	8	6		18	0	0	92
% Large 2 Axle Vehicles	0	5.9	3.1	0	2.3	3.1	1.6	9.1	0	1.9	3.5	3.4	4.7	3.1	3.8	2.7	3.8	4.2	5	3.7	0	0	2.7
3 Axle Vehicles	30	9	39		78	4	6	5		15	15	20	2		37	52	4	11		67	0	0	197
% 3 Axle Vehicles	60	52.9	39.8	0	45.1	1.2	0.4	45.5	0	0.8	3.5	34.5	0.7	0	4	46.4	1.9	7.7	0	13.8	0	0	5.8
4+ Axle Trucks	15	1	49		71	6	5	1		12	44	14	4		64	46	8	24		82	0	0	229
% 4+ Axle Trucks	30	5.9	50	75	41	1.9	0.3	9.1	0	0.7	10.2	24.1	1.4	1.6	7	41.1	3.8	16.9	20	16.9	0	0	6.8

	South Vincent Avenue Southbound				West Gladstone Street Westbound				South Vincent Avenue Northbound				West Gladstone Street Eastbound				
Start Time	Left	Thru	Right	App. Total	Left	Thru	Right	App. Total	Left	Thru	Right	App. Total	Left	Thru	Right	App. Total	Int. Total
Peak Hour Analysis From 07:00 AM to 08:45 AM - Peak 1 of 1																	
Peak Hour for Entire Intersection Begins at 07:00 AM																	
07:00 AM	2	**3**	5	10	32	**310**	0	**342**	**79**	7	25	111	12	22	**20**	54	**517**
07:15 AM	**8**	2	11	**21**	42	233	0	275	60	6	33	99	10	15	9	34	429
07:30 AM	4	2	**15**	21	**56**	202	**2**	260	67	3	27	97	5	19	19	43	421
07:45 AM	2	1	7	10	48	197	0	245	59	**13**	**62**	**134**	**16**	**41**	16	**73**	462
Total Volume	16	8	38	62	178	942	2	1122	265	29	147	441	43	97	64	204	1829
% App. Total	25.8	12.9	61.3		15.9	84	0.2		60.1	6.6	33.3		21.1	47.5	31.4		
PHF	.500	.667	.633	.738	.795	.760	.250	.820	.839	.558	.593	.823	.672	.591	.800	.699	.884

Counts Unlimited
PO Box 1178
Corona, CA 92878
(951) 268-6268

City of Azusa
N/S: South Vincent Avenue
E/W: West Gladstone Street
Weather: Clear

File Name : 17_AZU_Vincent_Gladstone AM
Site Code : 05117366
Start Date : 5/31/2017
Page No : 2

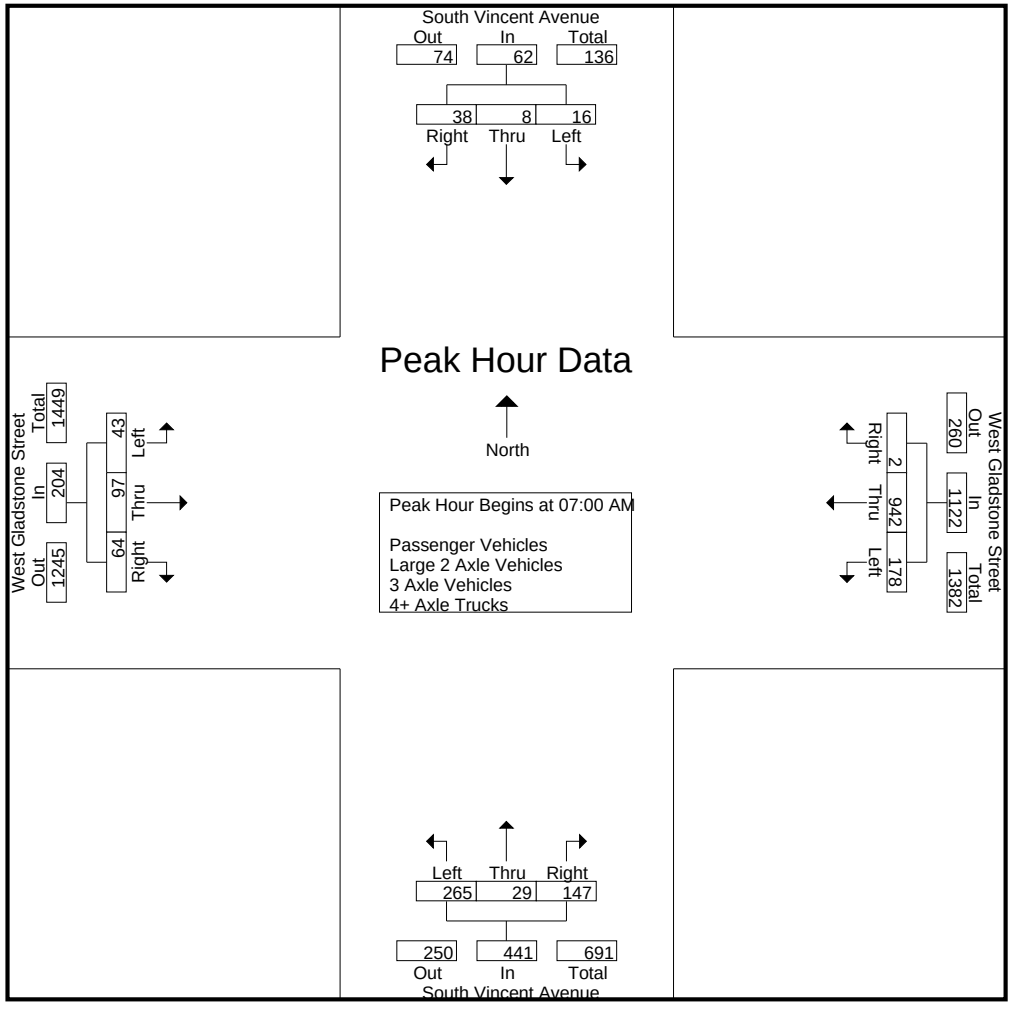

Counts Unlimited
PO Box 1178
Corona, CA 92878
(951) 268-6268

City of Azusa
N/S: South Vincent Avenue
E/W: West Gladstone Street
Weather: Clear

File Name : 17_AZU_Vincent_Gladstone AM
Site Code : 05117366
Start Date : 5/31/2017

	South Vincent Avenue Southbound				West Gladstone Street Westbound				South Vincent Avenue Northbound				West Gladstone Street Eastbound				
Start Time	Left	Thru	Right	App. Total	Left	Thru	Right	App. Total	Left	Thru	Right	App. Total	Left	Thru	Right	App. Total	Int. Total
Peak Hour Analysis From 07:00 AM to 08:45 AM - Peak 1 of 1																	
Peak Hour for Each Approach Begins at:																	
	08:00 AM				07:00 AM				07:00 AM				07:45 AM				
+0 mins.	3	2	18	23	32	**310**	0	**342**	**79**	7	25	111	16	**41**	16	73	
+15 mins.	9	2	12	23	42	233	0	275	60	6	33	99	**20**	38	20	**78**	
+30 mins.	**12**	2	**19**	**33**	**56**	202	**2**	260	67	3	27	97	19	26	**23**	68	
+45 mins.	10	**3**	11	24	48	197	0	245	59	**13**	**62**	**134**	17	28	16	61	
Total Volume	34	9	60	103	178	942	2	1122	265	29	147	441	72	133	75	280	
% App. Total	33	8.7	58.3		15.9	84	0.2		60.1	6.6	33.3		25.7	47.5	26.8		
PHF	.708	.750	.789	.780	.795	.760	.250	.820	.839	.558	.593	.823	.900	.811	.815	.897	

Counts Unlimited
PO Box 1178
Corona, CA 92878
(951) 268-6268

City of Azusa
N/S: South Vincent Avenue
E/W: West Gladstone Street
Weather: Clear

File Name : 17_AZU_Vincent_Gladstone AM
Site Code : 05117366
Start Date : 5/31/2017
Page No : 1

Groups Printed- Passenger Vehicles

	South Vincent Avenue Southbound					West Gladstone Street Westbound					South Vincent Avenue Northbound					West Gladstone Street Eastbound							
Start Time	Left	Thru	Right	RTOR	App. Total	Left	Thru	Right	RTOR	App. Total	Left	Thru	Right	RTOR	App. Total	Left	Thru	Right	RTOR	App. Total	Exclu. Total	Inclu. Total	Int. Total
07:00 AM	0	1	0	0	1	28	305	0	0	333	71	2	23	9	96	2	20	19	1	41	10	471	481
07:15 AM	1	0	0	0	1	38	229	0	0	267	55	3	29	15	87	2	13	7	1	22	16	377	393
07:30 AM	0	0	1	1	1	54	199	0	0	253	54	2	26	19	82	1	18	12	5	31	25	367	392
07:45 AM	0	1	1	1	2	48	193	0	0	241	55	9	58	20	122	3	38	13	0	54	21	419	440
Total	1	2	2	2	5	168	926	0	0	1094	235	16	136	63	387	8	89	51	7	148	72	1634	1706
08:00 AM	0	1	0	0	1	44	169	0	0	213	44	0	38	14	82	1	35	13	1	49	15	345	360
08:15 AM	1	0	1	0	2	25	143	2	0	170	23	1	40	22	64	0	25	11	1	36	23	272	295
08:30 AM	1	2	1	0	4	33	119	1	0	153	31	5	33	11	69	1	24	12	2	37	13	263	276
08:45 AM	2	1	3	0	6	30	91	1	0	122	25	0	29	13	54	1	19	14	4	34	17	216	233
Total	4	4	5	0	13	132	522	4	0	658	123	6	140	60	269	3	103	50	8	156	68	1096	1164
Grand Total	5	6	7	2	18	300	1448	4	0	1752	358	22	276	123	656	11	192	101	15	304	140	2730	2870
Apprch %	27.8	33.3	38.9			17.1	82.6	0.2			54.6	3.4	42.1			3.6	63.2	33.2					
Total %	0.2	0.2	0.3		0.7	11	53	0.1		64.2	13.1	0.8	10.1		24	0.4	7	3.7		11.1	4.9	95.1	

	South Vincent Avenue Southbound				West Gladstone Street Westbound				South Vincent Avenue Northbound				West Gladstone Street Eastbound				
Start Time	Left	Thru	Right	App. Total	Left	Thru	Right	App. Total	Left	Thru	Right	App. Total	Left	Thru	Right	App. Total	Int. Total
Peak Hour Analysis From 07:00 AM to 07:45 AM - Peak 1 of 1																	
Peak Hour for Entire Intersection Begins at 07:00 AM																	
07:00 AM	0	**1**	0	1	28	**305**	0	**333**	**71**	2	23	96	2	20	**19**	41	**471**
07:15 AM	**1**	0	0	1	38	229	0	267	55	3	29	87	2	13	7	22	377
07:30 AM	0	0	**1**	1	**54**	199	0	253	54	2	26	82	1	18	12	31	367
07:45 AM	0	1	1	**2**	48	193	0	241	55	**9**	**58**	**122**	**3**	**38**	13	**54**	419
Total Volume	1	2	2	5	168	926	0	1094	235	16	136	387	8	89	51	148	1634
% App. Total	20	40	40		15.4	84.6	0		60.7	4.1	35.1		5.4	60.1	34.5		
PHF	.250	.500	.500	.625	.778	.759	.000	.821	.827	.444	.586	.793	.667	.586	.671	.685	.867

Counts Unlimited
PO Box 1178
Corona, CA 92878
(951) 268-6268

City of Azusa
N/S: South Vincent Avenue
E/W: West Gladstone Street
Weather: Clear

File Name : 17_AZU_Vincent_Gladstone AM
Site Code : 05117366
Start Date : 5/31/2017
Page No : 2

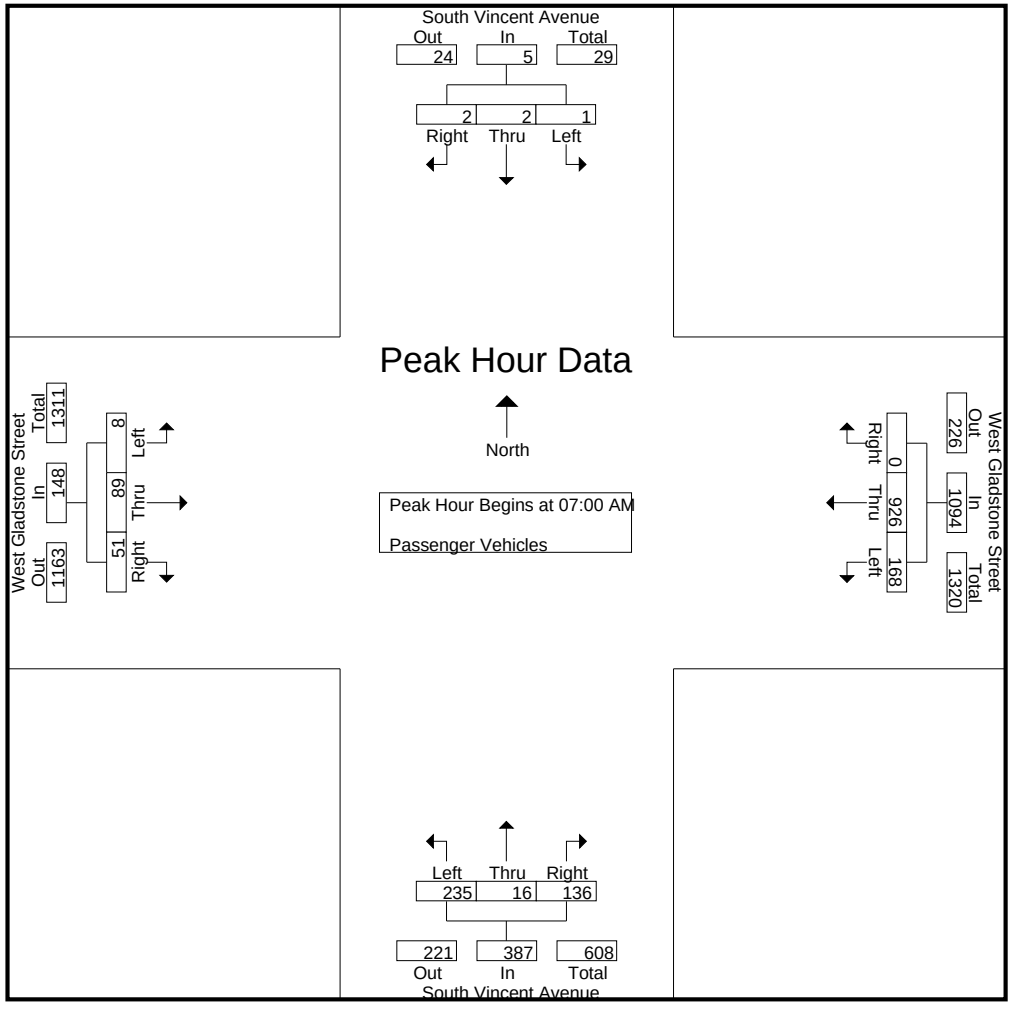

Counts Unlimited
PO Box 1178
Corona, CA 92878
(951) 268-6268

City of Azusa
N/S: South Vincent Avenue
E/W: West Gladstone Street
Weather: Clear

File Name : 17_AZU_Vincent_Gladstone AM
Site Code : 05117366
Start Date : 5/31/2017

	South Vincent Avenue Southbound				West Gladstone Street Westbound				South Vincent Avenue Northbound				West Gladstone Street Eastbound				
Start Time	Left	Thru	Right	App. Total	Left	Thru	Right	App. Total	Left	Thru	Right	App. Total	Left	Thru	Right	App. Total	Int. Total
Peak Hour Analysis From 07:00 AM to 07:45 AM - Peak 1 of 1																	
Peak Hour for Each Approach Begins at:																	
	07:00 AM				07:00 AM				07:00 AM				07:00 AM				
+0 mins.	0	**1**	0	1	28	**305**	0	**333**	**71**	2	23	96	2	20	**19**	41	
+15 mins.	**1**	0	0	1	38	229	0	267	55	3	29	87	2	13	7	22	
+30 mins.	0	0	**1**	1	**54**	199	0	253	54	2	26	82	1	18	12	31	
+45 mins.	0	1	1	**2**	48	193	0	241	55	**9**	**58**	**122**	**3**	**38**	13	**54**	
Total Volume	1	2	2	5	168	926	0	1094	235	16	136	387	8	89	51	148	
% App. Total	20	40	40		15.4	84.6	0		60.7	4.1	35.1		5.4	60.1	34.5		
PHF	.250	.500	.500	.625	.778	.759	.000	.821	.827	.444	.586	.793	.667	.586	.671	.685	

Counts Unlimited
PO Box 1178
Corona, CA 92878
(951) 268-6268

City of Azusa
N/S: South Vincent Avenue
E/W: West Gladstone Street
Weather: Clear

File Name : 17_AZU_Vincent_Gladstone AM
Site Code : 05117366
Start Date : 5/31/2017
Page No : 1

Groups Printed- Large 2 Axle Vehicles

	South Vincent Avenue Southbound					West Gladstone Street Westbound					South Vincent Avenue Northbound					West Gladstone Street Eastbound							
Start Time	Left	Thru	Right	RTOR	App. Total	Left	Thru	Right	RTOR	App. Total	Left	Thru	Right	RTOR	App. Total	Left	Thru	Right	RTOR	App. Total	Exclu. Total	Inclu. Total	Int. Total
07:00 AM	0	0	0	0	0	0	3	0	0	3	3	0	1	0	4	0	1	1	0	2	0	9	9
07:15 AM	0	0	1	0	1	2	3	0	0	5	2	1	4	0	7	1	0	0	0	1	0	14	14
07:30 AM	0	1	1	0	2	2	1	1	0	4	3	0	0	0	3	0	1	1	1	2	1	11	12
07:45 AM	0	0	0	0	0	0	2	0	0	2	1	0	3	1	4	0	2	0	0	2	1	8	9
Total	0	1	2	0	3	4	9	1	0	14	9	1	8	1	18	1	4	2	1	7	2	42	44
08:00 AM	0	0	0	0	0	4	2	0	0	6	0	1	1	1	2	1	1	0	0	2	1	10	11
08:15 AM	0	0	0	0	0	1	8	0	0	9	0	0	2	2	2	1	0	2	0	3	2	14	16
08:30 AM	0	0	1	0	1	1	4	0	0	5	4	0	0	0	4	0	2	0	0	2	0	12	12
08:45 AM	0	0	0	0	0	0	1	0	0	1	2	0	3	0	5	0	1	2	0	3	0	9	9
Total	0	0	1	0	1	6	15	0	0	21	6	1	6	3	13	2	4	4	0	10	3	45	48
Grand Total	0	1	3	0	4	10	24	1	0	35	15	2	14	4	31	3	8	6	1	17	5	87	92
Apprch %	0	25	75			28.6	68.6	2.9			48.4	6.5	45.2			17.6	47.1	35.3					
Total %	0	1.1	3.4		4.6	11.5	27.6	1.1		40.2	17.2	2.3	16.1		35.6	3.4	9.2	6.9		19.5	5.4	94.6	

	South Vincent Avenue Southbound				West Gladstone Street Westbound				South Vincent Avenue Northbound				West Gladstone Street Eastbound				
Start Time	Left	Thru	Right	App. Total	Left	Thru	Right	App. Total	Left	Thru	Right	App. Total	Left	Thru	Right	App. Total	Int. Total
Peak Hour Analysis From 07:00 AM to 07:45 AM - Peak 1 of 1																	
Peak Hour for Entire Intersection Begins at 07:00 AM																	
07:00 AM	0	0	0	0	0	**3**	0	3	**3**	0	1	4	0	1	**1**	**2**	9
07:15 AM	0	0	**1**	1	**2**	3	0	**5**	2	**1**	**4**	**7**	**1**	0	0	1	**14**
07:30 AM	0	**1**	1	**2**	2	1	**1**	4	3	0	0	3	0	1	1	2	11
07:45 AM	0	0	0	0	0	2	0	2	1	0	3	4	0	**2**	0	2	8
Total Volume	0	1	2	3	4	9	1	14	9	1	8	18	1	4	2	7	42
% App. Total	0	33.3	66.7		28.6	64.3	7.1		50	5.6	44.4		14.3	57.1	28.6		
PHF	.000	.250	.500	.375	.500	.750	.250	.700	.750	.250	.500	.643	.250	.500	.500	.875	.750

Counts Unlimited
PO Box 1178
Corona, CA 92878
(951) 268-6268

City of Azusa
N/S: South Vincent Avenue
E/W: West Gladstone Street
Weather: Clear

File Name : 17_AZU_Vincent_Gladstone AM
Site Code : 05117366
Start Date : 5/31/2017
Page No : 2

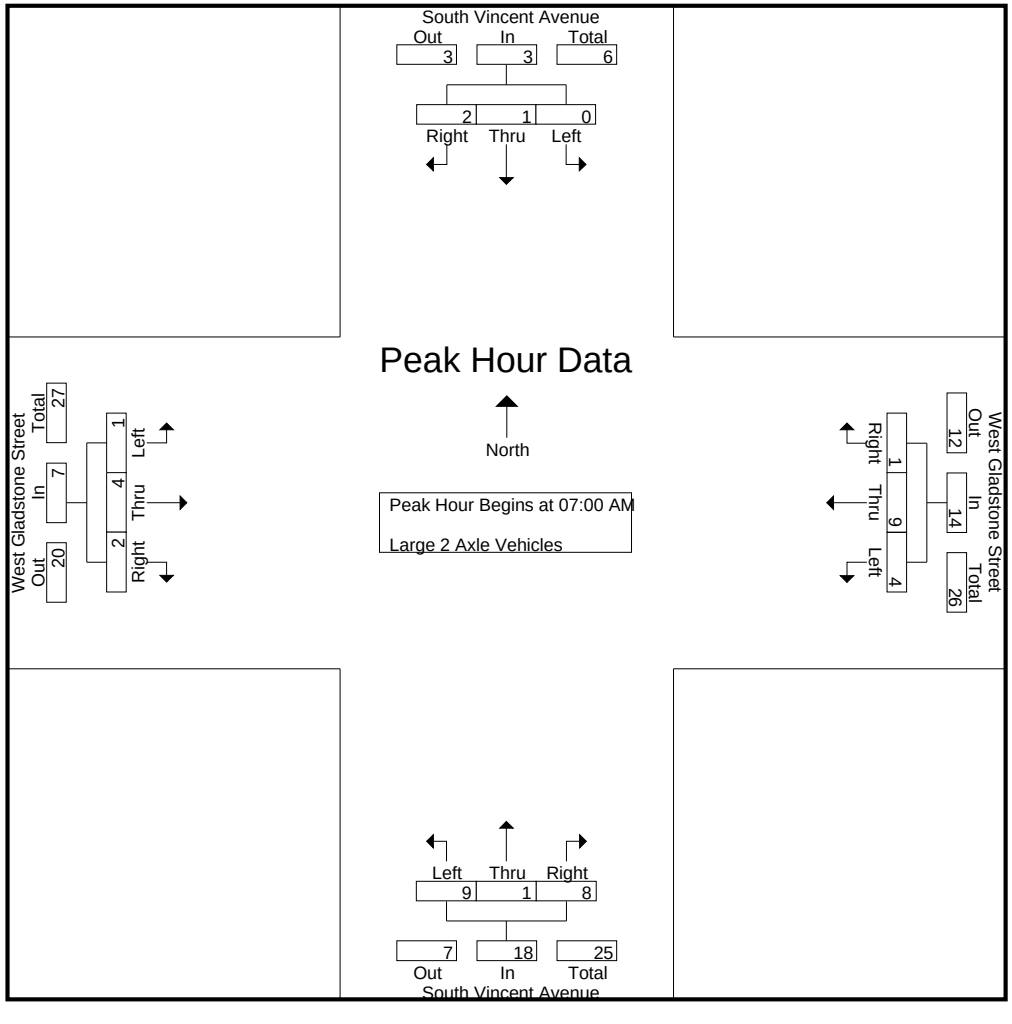

Counts Unlimited
PO Box 1178
Corona, CA 92878
(951) 268-6268

City of Azusa
N/S: South Vincent Avenue
E/W: West Gladstone Street
Weather: Clear

File Name : 17_AZU_Vincent_Gladstone AM
Site Code : 05117366
Start Date : 5/31/2017

	South Vincent Avenue Southbound				West Gladstone Street Westbound				South Vincent Avenue Northbound				West Gladstone Street Eastbound				
Start Time	Left	Thru	Right	App. Total	Left	Thru	Right	App. Total	Left	Thru	Right	App. Total	Left	Thru	Right	App. Total	Int. Total
Peak Hour Analysis From 07:00 AM to 07:45 AM - Peak 1 of 1																	
Peak Hour for Each Approach Begins at:																	
	07:00 AM				07:00 AM				07:00 AM				07:00 AM				
+0 mins.	0	0	0	0	0	**3**	0	3	**3**	0	1	4	0	1	**1**	**2**	
+15 mins.	0	0	**1**	1	**2**	3	0	**5**	2	**1**	**4**	**7**	**1**	0	0	1	
+30 mins.	0	**1**	1	**2**	2	1	**1**	4	3	0	0	3	0	1	1	2	
+45 mins.	0	0	0	0	0	2	0	2	1	0	3	4	0	**2**	0	2	
Total Volume	0	1	2	3	4	9	1	14	9	1	8	18	1	4	2	7	
% App. Total	0	33.3	66.7		28.6	64.3	7.1		50	5.6	44.4		14.3	57.1	28.6		
PHF	.000	.250	.500	.375	.500	.750	.250	.700	.750	.250	.500	.643	.250	.500	.500	.875	

Counts Unlimited
PO Box 1178
Corona, CA 92878
(951) 268-6268

City of Azusa
N/S: South Vincent Avenue
E/W: West Gladstone Street
Weather: Clear

File Name : 17_AZU_Vincent_Gladstone AM
Site Code : 05117366
Start Date : 5/31/2017
Page No : 1

Groups Printed- 3 Axle Vehicles

	South Vincent Avenue Southbound					West Gladstone Street Westbound					South Vincent Avenue Northbound					West Gladstone Street Eastbound							
Start Time	Left	Thru	Right	RTOR	App. Total	Left	Thru	Right	RTOR	App. Total	Left	Thru	Right	RTOR	App. Total	Left	Thru	Right	RTOR	App. Total	Exclu. Total	Inclu. Total	Int. Total
07:00 AM	1	2	1	0	4	0	2	0	0	2	0	2	0	0	2	2	1	0	0	3	0	11	11
07:15 AM	3	2	2	0	7	0	1	0	0	1	0	0	0	0	0	2	1	2	0	5	0	13	13
07:30 AM	2	1	0	0	3	0	1	1	0	2	2	0	1	0	3	1	0	2	0	3	0	11	11
07:45 AM	1	0	2	0	3	0	1	0	0	1	0	4	0	0	4	8	1	1	0	10	0	18	18
Total	7	5	5	0	17	0	5	1	0	6	2	6	1	0	9	13	3	5	0	21	0	53	53
08:00 AM	3	1	12	0	16	1	0	0	0	1	3	1	0	0	4	10	0	2	0	12	0	33	33
08:15 AM	7	1	6	0	14	0	1	1	0	2	7	6	1	0	14	10	1	2	0	13	0	43	43
08:30 AM	9	0	10	0	19	2	0	0	0	2	2	5	0	0	7	13	0	2	0	15	0	43	43
08:45 AM	4	2	6	0	12	1	0	3	0	4	1	2	0	0	3	6	0	0	0	6	0	25	25
Total	23	4	34	0	61	4	1	4	0	9	13	14	1	0	28	39	1	6	0	46	0	144	144
Grand Total	30	9	39	0	78	4	6	5	0	15	15	20	2	0	37	52	4	11	0	67	0	197	197
Apprch %	38.5	11.5	50			26.7	40	33.3			40.5	54.1	5.4			77.6	6	16.4					
Total %	15.2	4.6	19.8		39.6	2	3	2.5		7.6	7.6	10.2	1		18.8	26.4	2	5.6		34	0	100	

	South Vincent Avenue Southbound				West Gladstone Street Westbound				South Vincent Avenue Northbound				West Gladstone Street Eastbound				
Start Time	Left	Thru	Right	App. Total	Left	Thru	Right	App. Total	Left	Thru	Right	App. Total	Left	Thru	Right	App. Total	Int. Total
Peak Hour Analysis From 07:00 AM to 07:45 AM - Peak 1 of 1																	
Peak Hour for Entire Intersection Begins at 07:00 AM																	
07:00 AM	1	**2**	1	4	0	**2**	0	**2**	0	2	0	2	2	**1**	0	3	11
07:15 AM	**3**	2	**2**	**7**	0	1	0	1	0	0	0	0	2	1	**2**	5	13
07:30 AM	2	1	0	3	0	1	**1**	2	**2**	0	**1**	3	1	0	2	3	11
07:45 AM	1	0	2	3	0	1	0	1	0	**4**	0	**4**	**8**	1	1	**10**	**18**
Total Volume	7	5	5	17	0	5	1	6	2	6	1	9	13	3	5	21	53
% App. Total	41.2	29.4	29.4		0	83.3	16.7		22.2	66.7	11.1		61.9	14.3	23.8		
PHF	.583	.625	.625	.607	.000	.625	.250	.750	.250	.375	.250	.563	.406	.750	.625	.525	.736

Counts Unlimited
PO Box 1178
Corona, CA 92878
(951) 268-6268

City of Azusa
N/S: South Vincent Avenue
E/W: West Gladstone Street
Weather: Clear

File Name : 17_AZU_Vincent_Gladstone AM
Site Code : 05117366
Start Date : 5/31/2017
Page No : 2

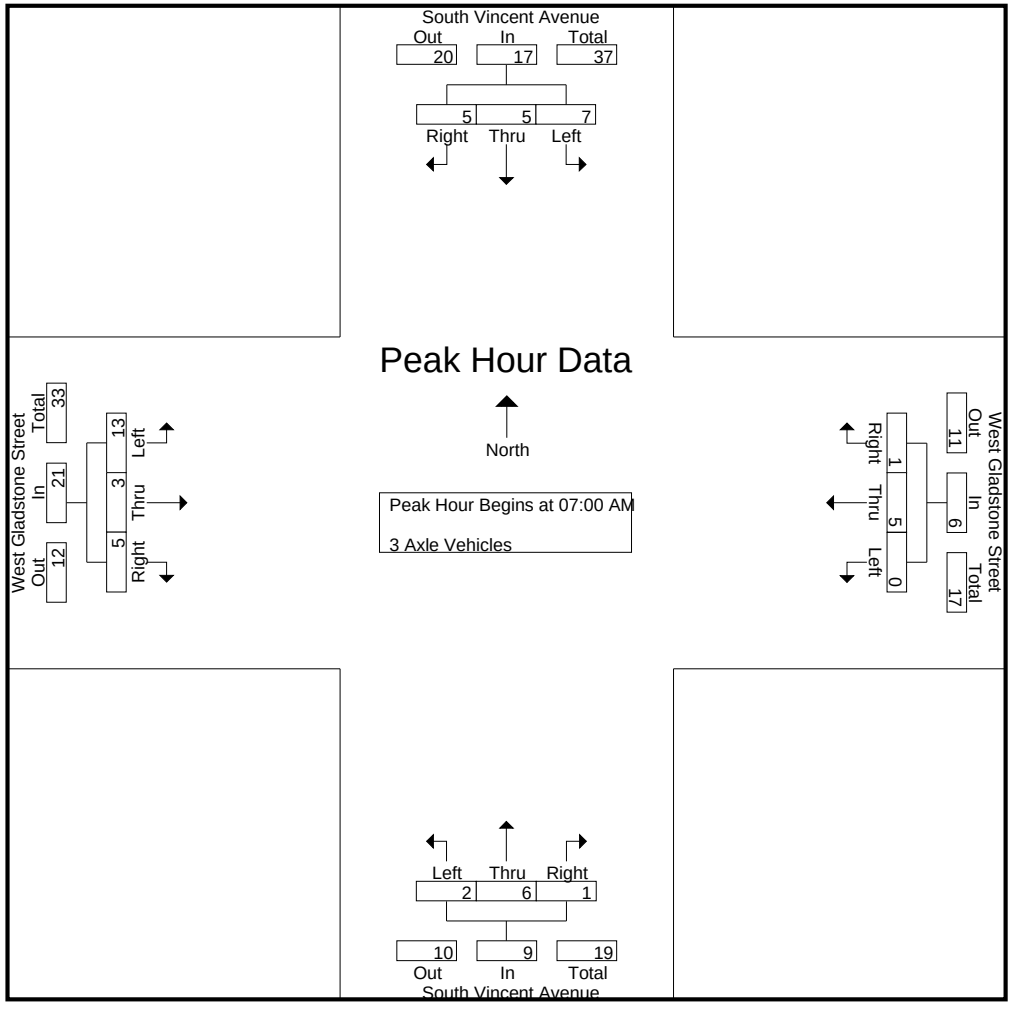

Counts Unlimited
PO Box 1178
Corona, CA 92878
(951) 268-6268

City of Azusa
N/S: South Vincent Avenue
E/W: West Gladstone Street
Weather: Clear

File Name : 17_AZU_Vincent_Gladstone AM
Site Code : 05117366
Start Date : 5/31/2017

	South Vincent Avenue Southbound				West Gladstone Street Westbound				South Vincent Avenue Northbound				West Gladstone Street Eastbound				
Start Time	Left	Thru	Right	App. Total	Left	Thru	Right	App. Total	Left	Thru	Right	App. Total	Left	Thru	Right	App. Total	Int. Total
Peak Hour Analysis From 07:00 AM to 07:45 AM - Peak 1 of 1																	
Peak Hour for Each Approach Begins at:																	
	07:00 AM				07:00 AM				07:00 AM				07:00 AM				
+0 mins.	1	**2**	1	4	0	**2**	0	**2**	0	2	0	2	2	**1**	0	3	
+15 mins.	**3**	2	**2**	**7**	0	1	0	1	0	0	0	0	2	1	**2**	5	
+30 mins.	2	1	0	3	0	1	**1**	2	**2**	0	**1**	3	1	0	2	3	
+45 mins.	1	0	2	3	0	1	0	1	0	**4**	0	**4**	**8**	1	1	**10**	
Total Volume	7	5	5	17	0	5	1	6	2	6	1	9	13	3	5	21	
% App. Total	41.2	29.4	29.4		0	83.3	16.7		22.2	66.7	11.1		61.9	14.3	23.8		
PHF	.583	.625	.625	.607	.000	.625	.250	.750	.250	.375	.250	.563	.406	.750	.625	.525	

Counts Unlimited
PO Box 1178
Corona, CA 92878
(951) 268-6268

City of Azusa
N/S: South Vincent Avenue
E/W: West Gladstone Street
Weather: Clear

File Name : 17_AZU_Vincent_Gladstone AM
Site Code : 05117366
Start Date : 5/31/2017
Page No : 1

Groups Printed- 4+ Axle Trucks

	South Vincent Avenue Southbound					West Gladstone Street Westbound					South Vincent Avenue Northbound					West Gladstone Street Eastbound							
Start Time	Left	Thru	Right	RTOR	App. Total	Left	Thru	Right	RTOR	App. Total	Left	Thru	Right	RTOR	App. Total	Left	Thru	Right	RTOR	App. Total	Exclu. Total	Inclu. Total	Int. Total
07:00 AM	1	0	4	2	5	4	0	0	0	4	5	3	1	0	9	8	0	0	0	8	2	26	28
07:15 AM	4	0	8	2	12	2	0	0	0	2	3	2	0	0	5	5	1	0	0	6	2	25	27
07:30 AM	2	0	13	1	15	0	1	0	0	1	8	1	0	0	9	3	0	4	1	7	2	32	34
07:45 AM	1	0	4	1	5	0	1	0	0	1	3	0	1	0	4	5	0	2	0	7	1	17	18
Total	8	0	29	6	37	6	2	0	0	8	19	6	2	0	27	21	1	6	1	28	7	100	107
08:00 AM	0	0	6	0	6	0	1	0	0	1	6	0	2	2	8	8	2	5	0	15	2	30	32
08:15 AM	1	1	5	0	7	0	1	1	0	2	8	0	0	0	8	8	0	8	3	16	3	33	36
08:30 AM	2	0	7	0	9	0	0	0	0	0	9	4	0	0	13	3	2	2	0	7	0	29	29
08:45 AM	4	0	2	0	6	0	1	0	0	1	2	4	0	0	6	6	3	3	0	12	0	25	25
Total	7	1	20	0	28	0	3	1	0	4	25	8	2	2	35	25	7	18	3	50	5	117	122
Grand Total	15	1	49	6	65	6	5	1	0	12	44	14	4	2	62	46	8	24	4	78	12	217	229
Apprch %	23.1	1.5	75.4			50	41.7	8.3			71	22.6	6.5			59	10.3	30.8					
Total %	6.9	0.5	22.6		30	2.8	2.3	0.5		5.5	20.3	6.5	1.8		28.6	21.2	3.7	11.1		35.9	5.2	94.8	

	South Vincent Avenue Southbound				West Gladstone Street Westbound				South Vincent Avenue Northbound				West Gladstone Street Eastbound				
Start Time	Left	Thru	Right	App. Total	Left	Thru	Right	App. Total	Left	Thru	Right	App. Total	Left	Thru	Right	App. Total	Int. Total
Peak Hour Analysis From 07:00 AM to 07:45 AM - Peak 1 of 1																	
Peak Hour for Entire Intersection Begins at 07:00 AM																	
07:00 AM	1	0	4	5	**4**	0	0	**4**	5	**3**	**1**	**9**	**8**	0	0	**8**	26
07:15 AM	**4**	0	8	12	2	0	0	2	3	2	0	5	5	**1**	0	6	25
07:30 AM	2	0	**13**	**15**	0	**1**	0	1	**8**	1	0	9	3	0	**4**	7	**32**
07:45 AM	1	0	4	5	0	1	0	1	3	0	1	4	5	0	2	7	17
Total Volume	8	0	29	37	6	2	0	8	19	6	2	27	21	1	6	28	100
% App. Total	21.6	0	78.4		75	25	0		70.4	22.2	7.4		75	3.6	21.4		
PHF	.500	.000	.558	.617	.375	.500	.000	.500	.594	.500	.500	.750	.656	.250	.375	.875	.781

Counts Unlimited
PO Box 1178
Corona, CA 92878
(951) 268-6268

City of Azusa
N/S: South Vincent Avenue
E/W: West Gladstone Street
Weather: Clear

File Name : 17_AZU_Vincent_Gladstone AM
Site Code : 05117366
Start Date : 5/31/2017
Page No : 2

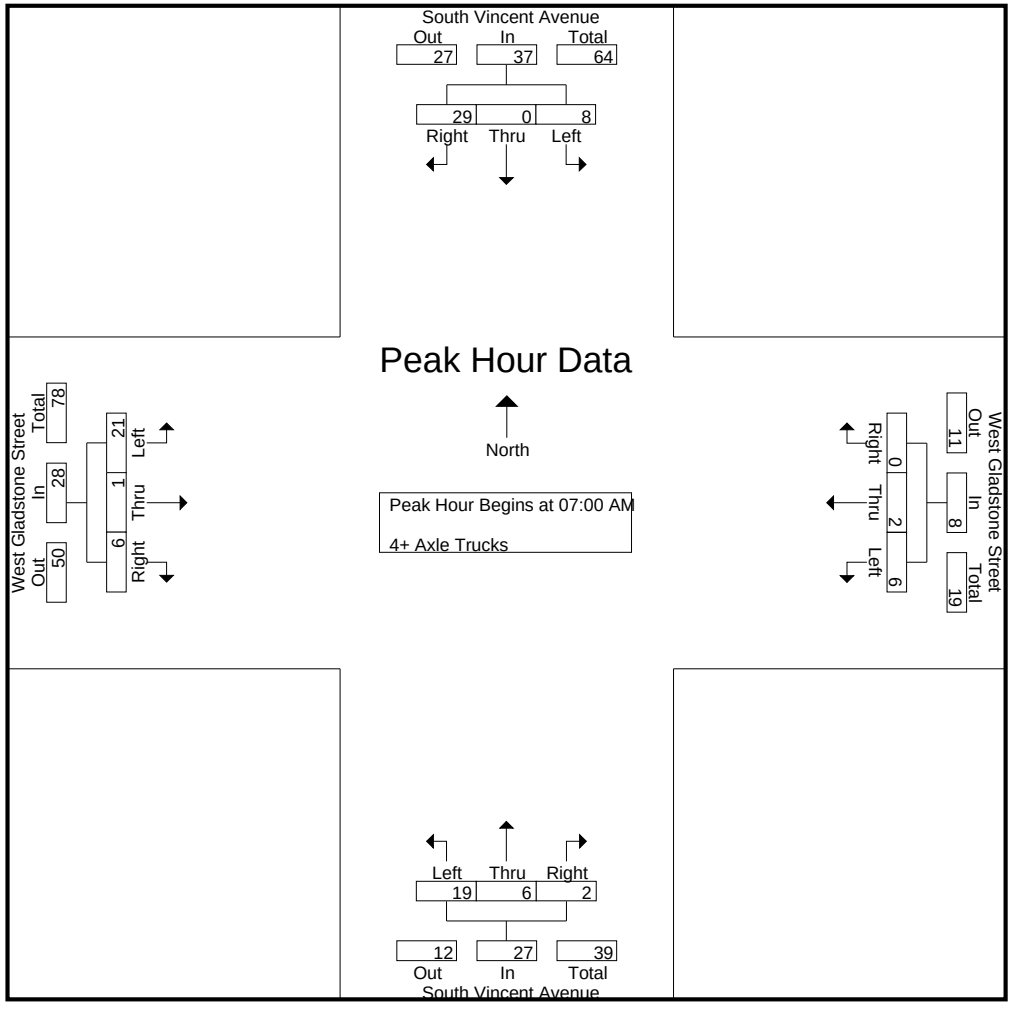

Counts Unlimited
PO Box 1178
Corona, CA 92878
(951) 268-6268

City of Azusa
N/S: South Vincent Avenue
E/W: West Gladstone Street
Weather: Clear

File Name : 17_AZU_Vincent_Gladstone AM
Site Code : 05117366
Start Date : 5/31/2017
Page No : 3

	South Vincent Avenue Southbound				West Gladstone Street Westbound				South Vincent Avenue Northbound				West Gladstone Street Eastbound				
Start Time	Left	Thru	Right	App. Total	Left	Thru	Right	App. Total	Left	Thru	Right	App. Total	Left	Thru	Right	App. Total	Int. Total
Peak Hour Analysis From 07:00 AM to 07:45 AM - Peak 1 of 1																	
Peak Hour for Each Approach Begins at:																	
	07:00 AM				07:00 AM				07:00 AM				07:00 AM				
+0 mins.	1	0	4	5	**4**	0	0	**4**	5	**3**	**1**	**9**	**8**	0	0	**8**	
+15 mins.	**4**	0	8	12	2	0	0	2	3	2	0	5	5	**1**	0	6	
+30 mins.	2	0	**13**	**15**	0	**1**	0	1	**8**	1	0	9	3	0	**4**	7	
+45 mins.	1	0	4	5	0	1	0	1	3	0	1	4	5	0	2	7	
Total Volume	8	0	29	37	6	2	0	8	19	6	2	27	21	1	6	28	
% App. Total	21.6	0	78.4		75	25	0		70.4	22.2	7.4		75	3.6	21.4		
PHF	.500	.000	.558	.617	.375	.500	.000	.500	.594	.500	.500	.750	.656	.250	.375	.875	

Counts Unlimited
PO Box 1178
Corona, CA 92878
(951) 268-6268

City of Azusa
N/S: South Vincent Avenue
E/W: West Gladstone Street
Weather: Clear

File Name : 17_AZU_Vincent_Gladstone PM
Site Code : 05117366
Start Date : 5/31/2017
Page No : 1

Groups Printed- Passenger Vehicles - Large 2 Axle Vehicles - 3 Axle Vehicles - 4+ Axle Trucks

	South Vincent Avenue Southbound					West Gladstone Street Westbound					South Vincent Avenue Northbound					West Gladstone Street Eastbound							
Start Time	Left	Thru	Right	RTOR	App. Total	Left	Thru	Right	RTOR	App. Total	Left	Thru	Right	RTOR	App. Total	Left	Thru	Right	RTOR	App. Total	Exclu. Total	Inclu. Total	Int. Total
04:00 PM	8	10	5	2	23	31	40	0	0	71	24	10	123	54	157	8	200	44	3	252	59	503	562
04:15 PM	7	7	6	1	20	39	46	0	0	85	37	13	126	39	176	6	198	36	1	240	41	521	562
04:30 PM	5	11	7	0	23	38	56	0	0	94	23	6	112	45	141	7	215	33	1	255	46	513	559
04:45 PM	4	4	3	0	11	44	46	2	0	92	33	10	111	35	154	4	210	34	3	248	38	505	543
Total	24	32	21	3	77	152	188	2	0	342	117	39	472	173	628	25	823	147	8	995	184	2042	2226
05:00 PM	4	3	4	3	11	35	55	1	0	91	28	5	102	47	135	0	224	53	3	277	53	514	567
05:15 PM	3	7	4	0	14	33	46	0	0	79	29	3	150	58	182	3	213	40	1	256	59	531	590
05:30 PM	1	8	0	0	9	34	32	1	0	67	30	4	127	62	161	3	176	35	2	214	64	451	515
05:45 PM	0	2	4	3	6	37	41	1	0	79	19	3	75	51	97	3	175	39	1	217	55	399	454
Total	8	20	12	6	40	139	174	3	0	316	106	15	454	218	575	9	788	167	7	964	231	1895	2126
Grand Total	32	52	33	9	117	291	362	5	0	658	223	54	926	391	1203	34	1611	314	15	1959	415	3937	4352
Apprch %	27.4	44.4	28.2			44.2	55	0.8			18.5	4.5	77			1.7	82.2	16					
Total %	0.8	1.3	0.8		3	7.4	9.2	0.1		16.7	5.7	1.4	23.5		30.6	0.9	40.9	8		49.8	9.5	90.5	
Passenger Vehicles	7	8	13		34	262	346	3		611	206	19	902		1509	4	1583	294		1895	0	0	4049
% Passenger Vehicles	21.9	15.4	39.4	66.7	27	90	95.6	60	0	92.9	92.4	35.2	97.4	97.7	94.7	11.8	98.3	93.6	93.3	96	0	0	93
Large 2 Axle Vehicles	0	4	1		5	22	7	0		29	5	1	17		31	6	20	14		40	0	0	105
% Large 2 Axle Vehicles	0	7.7	3	0	4	7.6	1.9	0	0	4.4	2.2	1.9	1.8	2	1.9	17.6	1.2	4.5	0	2	0	0	2.4
3 Axle Vehicles	18	38	11		67	7	4	1		12	2	29	3		34	18	4	1		23	0	0	136
% 3 Axle Vehicles	56.2	73.1	33.3	0	53.2	2.4	1.1	20	0	1.8	0.9	53.7	0.3	0	2.1	52.9	0.2	0.3	0	1.2	0	0	3.1
4+ Axle Trucks	7	2	8		20	0	5	1		6	10	5	4		20	6	4	5		16	0	0	62
% 4+ Axle Trucks	21.9	3.8	24.2	33.3	15.9	0	1.4	20	0	0.9	4.5	9.3	0.4	0.3	1.3	17.6	0.2	1.6	6.7	0.8	0	0	1.4

	South Vincent Avenue Southbound				West Gladstone Street Westbound				South Vincent Avenue Northbound				West Gladstone Street Eastbound				
Start Time	Left	Thru	Right	App. Total	Left	Thru	Right	App. Total	Left	Thru	Right	App. Total	Left	Thru	Right	App. Total	Int. Total
Peak Hour Analysis From 04:00 PM to 05:45 PM - Peak 1 of 1																	
Peak Hour for Entire Intersection Begins at 04:30 PM																	
04:30 PM	**5**	**11**	**7**	**23**	38	**56**	0	**94**	23	6	112	141	**7**	215	33	255	513
04:45 PM	4	4	3	11	**44**	46	**2**	92	**33**	**10**	111	154	4	210	34	248	505
05:00 PM	4	3	4	11	35	55	1	91	28	5	102	135	0	**224**	**53**	**277**	514
05:15 PM	3	7	4	14	33	46	0	79	29	3	**150**	**182**	3	213	40	256	**531**
Total Volume	16	25	18	59	150	203	3	356	113	24	475	612	14	862	160	1036	2063
% App. Total	27.1	42.4	30.5		42.1	57	0.8		18.5	3.9	77.6		1.4	83.2	15.4		
PHF	.800	.568	.643	.641	.852	.906	.375	.947	.856	.600	.792	.841	.500	.962	.755	.935	.971

Counts Unlimited
PO Box 1178
Corona, CA 92878
(951) 268-6268

City of Azusa
N/S: South Vincent Avenue
E/W: West Gladstone Street
Weather: Clear

File Name : 17_AZU_Vincent_Gladstone PM
Site Code : 05117366
Start Date : 5/31/2017
Page No : 2

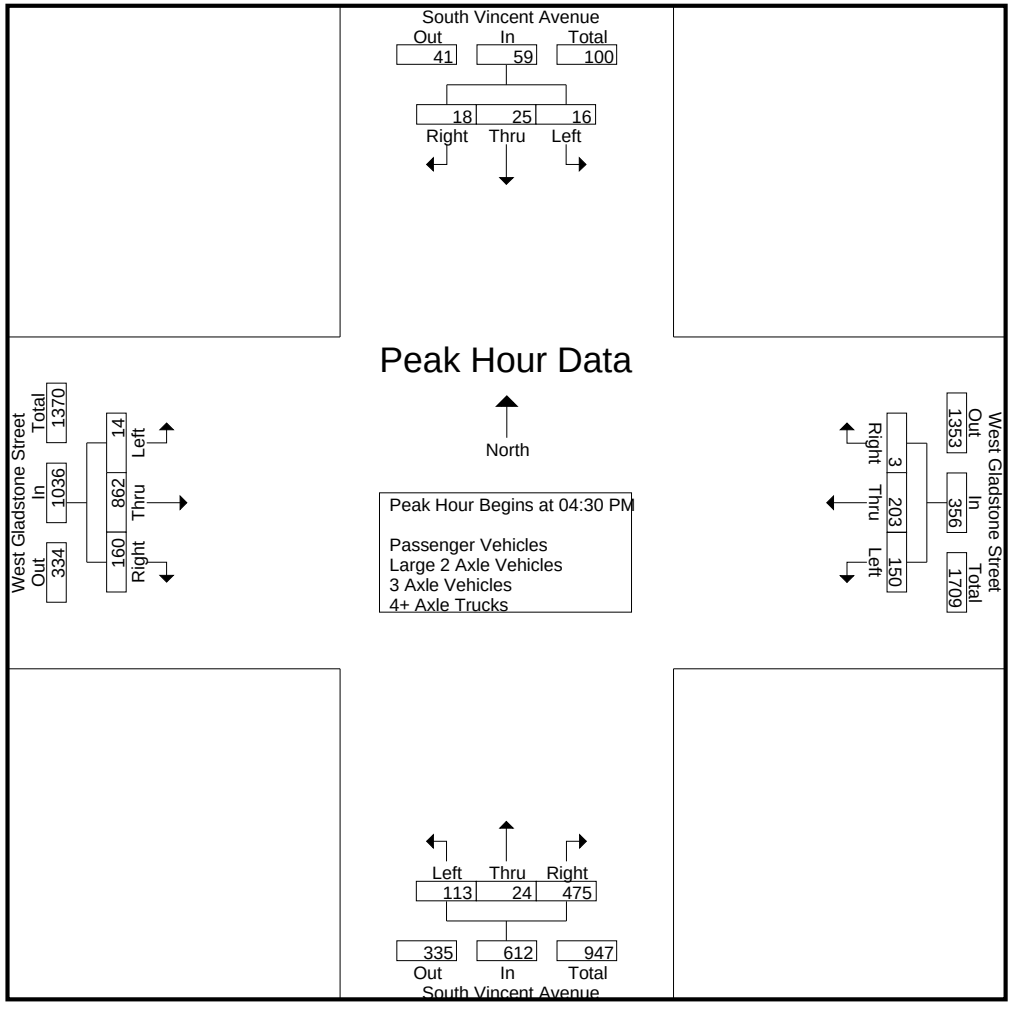

Counts Unlimited
PO Box 1178
Corona, CA 92878
(951) 268-6268

City of Azusa
N/S: South Vincent Avenue
E/W: West Gladstone Street
Weather: Clear

File Name : 17_AZU_Vincent_Gladstone PM
Site Code : 05117366
Start Date : 5/31/2017

	South Vincent Avenue Southbound				West Gladstone Street Westbound				South Vincent Avenue Northbound				West Gladstone Street Eastbound				
Start Time	Left	Thru	Right	App. Total	Left	Thru	Right	App. Total	Left	Thru	Right	App. Total	Left	Thru	Right	App. Total	Int. Total
Peak Hour Analysis From 04:00 PM to 05:45 PM - Peak 1 of 1																	
Peak Hour for Each Approach Begins at:																	
	04:00 PM				04:15 PM				04:45 PM				04:30 PM				
+0 mins.	**8**	10	5	**23**	39	46	0	85	**33**	**10**	111	154	**7**	215	33	255	
+15 mins.	7	7	6	20	38	**56**	0	**94**	28	5	102	135	4	210	34	248	
+30 mins.	5	**11**	**7**	23	**44**	46	**2**	92	29	3	**150**	**182**	0	**224**	**53**	**277**	
+45 mins.	4	4	3	11	35	55	1	91	30	4	127	161	3	213	40	256	
Total Volume	24	32	21	77	156	203	3	362	120	22	490	632	14	862	160	1036	
% App. Total	31.2	41.6	27.3		43.1	56.1	0.8		19	3.5	77.5		1.4	83.2	15.4		
PHF	.750	.727	.750	.837	.886	.906	.375	.963	.909	.550	.817	.868	.500	.962	.755	.935	

Counts Unlimited
PO Box 1178
Corona, CA 92878
(951) 268-6268

City of Azusa
N/S: South Vincent Avenue
E/W: West Gladstone Street
Weather: Clear

File Name : 17_AZU_Vincent_Gladstone PM
Site Code : 05117366
Start Date : 5/31/2017
Page No : 1

Groups Printed- Passenger Vehicles

	South Vincent Avenue Southbound					West Gladstone Street Westbound					South Vincent Avenue Northbound					West Gladstone Street Eastbound							
Start Time	Left	Thru	Right	RTOR	App. Total	Left	Thru	Right	RTOR	App. Total	Left	Thru	Right	RTOR	App. Total	Left	Thru	Right	RTOR	App. Total	Exclu. Total	Inclu. Total	Int. Total
04:00 PM	0	4	0	0	4	27	35	0	0	62	18	5	120	54	143	0	196	38	3	234	57	443	500
04:15 PM	2	1	3	1	6	33	45	0	0	78	34	5	117	37	156	1	194	34	1	229	39	469	508
04:30 PM	4	1	1	0	6	35	53	0	0	88	20	4	105	40	129	1	210	31	1	242	41	465	506
04:45 PM	1	0	3	0	4	38	45	1	0	84	31	1	110	34	142	0	207	31	3	238	37	468	505
Total	7	6	7	1	20	133	178	1	0	312	103	15	452	165	570	2	807	134	8	943	174	1845	2019
05:00 PM	0	0	4	3	4	33	53	1	0	87	27	0	102	47	129	0	221	48	2	269	52	489	541
05:15 PM	0	1	0	0	1	31	46	0	0	77	28	1	148	58	177	0	211	40	1	251	59	506	565
05:30 PM	0	0	0	0	0	31	30	1	0	62	30	1	127	62	158	2	171	35	2	208	64	428	492
05:45 PM	0	1	2	2	3	34	39	0	0	73	18	2	73	50	93	0	173	37	1	210	53	379	432
Total	0	2	6	5	8	129	168	2	0	299	103	4	450	217	557	2	776	160	6	938	228	1802	2030
Grand Total	7	8	13	6	28	262	346	3	0	611	206	19	902	382	1127	4	1583	294	14	1881	402	3647	4049
Apprch %	25	28.6	46.4			42.9	56.6	0.5			18.3	1.7	80			0.2	84.2	15.6					
Total %	0.2	0.2	0.4		0.8	7.2	9.5	0.1		16.8	5.6	0.5	24.7		30.9	0.1	43.4	8.1		51.6	9.9	90.1	

	South Vincent Avenue Southbound				West Gladstone Street Westbound				South Vincent Avenue Northbound				West Gladstone Street Eastbound				
Start Time	Left	Thru	Right	App. Total	Left	Thru	Right	App. Total	Left	Thru	Right	App. Total	Left	Thru	Right	App. Total	Int. Total
Peak Hour Analysis From 04:30 PM to 05:15 PM - Peak 1 of 1																	
Peak Hour for Entire Intersection Begins at 04:30 PM																	
04:30 PM	**4**	**1**	1	**6**	35	**53**	0	**88**	20	**4**	105	129	**1**	210	31	242	465
04:45 PM	1	0	3	4	**38**	45	**1**	84	**31**	1	110	142	0	207	31	238	468
05:00 PM	0	0	**4**	4	33	53	1	87	27	0	102	129	0	**221**	**48**	**269**	489
05:15 PM	0	1	0	1	31	46	0	77	28	1	**148**	**177**	0	211	40	251	**506**
Total Volume	5	2	8	15	137	197	2	336	106	6	465	577	1	849	150	1000	1928
% App. Total	33.3	13.3	53.3		40.8	58.6	0.6		18.4	1	80.6		0.1	84.9	15		
PHF	.313	.500	.500	.625	.901	.929	.500	.955	.855	.375	.785	.815	.250	.960	.781	.929	.953

Counts Unlimited
PO Box 1178
Corona, CA 92878
(951) 268-6268

City of Azusa
N/S: South Vincent Avenue
E/W: West Gladstone Street
Weather: Clear

File Name : 17_AZU_Vincent_Gladstone PM
Site Code : 05117366
Start Date : 5/31/2017
Page No : 2

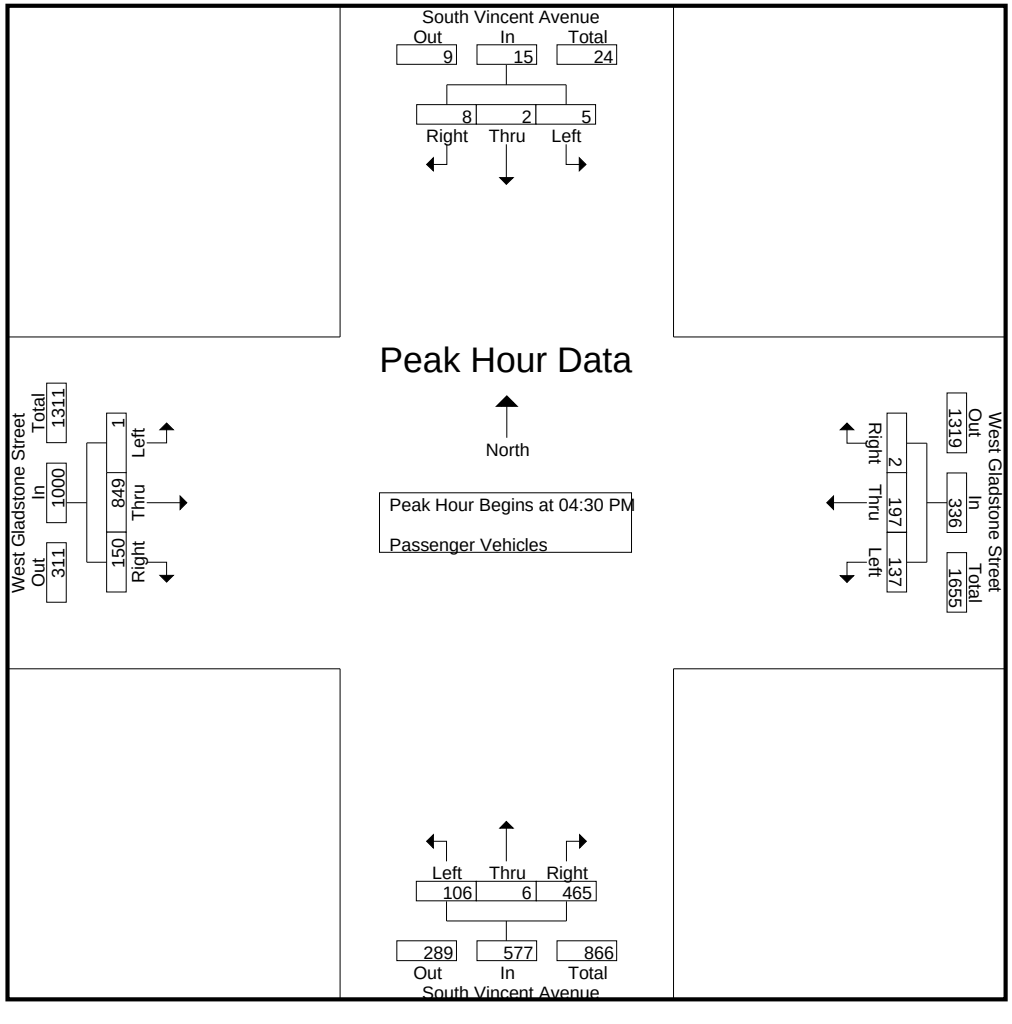

Counts Unlimited
PO Box 1178
Corona, CA 92878
(951) 268-6268

City of Azusa
N/S: South Vincent Avenue
E/W: West Gladstone Street
Weather: Clear

File Name : 17_AZU_Vincent_Gladstone PM
Site Code : 05117366
Start Date : 5/31/2017

	South Vincent Avenue Southbound				West Gladstone Street Westbound				South Vincent Avenue Northbound				West Gladstone Street Eastbound				
Start Time	Left	Thru	Right	App. Total	Left	Thru	Right	App. Total	Left	Thru	Right	App. Total	Left	Thru	Right	App. Total	Int. Total
Peak Hour Analysis From 04:30 PM to 05:15 PM - Peak 1 of 1																	
Peak Hour for Each Approach Begins at:																	
	04:30 PM				04:30 PM				04:30 PM				04:30 PM				
+0 mins.	**4**	**1**	1	**6**	35	**53**	0	**88**	20	**4**	105	129	**1**	210	31	242	
+15 mins.	1	0	3	4	**38**	45	**1**	84	**31**	1	110	142	0	207	31	238	
+30 mins.	0	0	**4**	4	33	53	1	87	27	0	102	129	0	**221**	**48**	**269**	
+45 mins.	0	1	0	1	31	46	0	77	28	1	**148**	**177**	0	211	40	251	
Total Volume	5	2	8	15	137	197	2	336	106	6	465	577	1	849	150	1000	
% App. Total	33.3	13.3	53.3		40.8	58.6	0.6		18.4	1	80.6		0.1	84.9	15		
PHF	.313	.500	.500	.625	.901	.929	.500	.955	.855	.375	.785	.815	.250	.960	.781	.929	

Counts Unlimited
PO Box 1178
Corona, CA 92878
(951) 268-6268

City of Azusa
N/S: South Vincent Avenue
E/W: West Gladstone Street
Weather: Clear

File Name : 17_AZU_Vincent_Gladstone PM
Site Code : 05117366
Start Date : 5/31/2017
Page No : 1

Groups Printed- Large 2 Axle Vehicles

	South Vincent Avenue Southbound					West Gladstone Street Westbound					South Vincent Avenue Northbound					West Gladstone Street Eastbound							
Start Time	Left	Thru	Right	RTOR	App. Total	Left	Thru	Right	RTOR	App. Total	Left	Thru	Right	RTOR	App. Total	Left	Thru	Right	RTOR	App. Total	Exclu. Total	Inclu. Total	Int. Total
04:00 PM	0	0	0	0	0	3	1	0	0	4	0	0	1	0	1	1	3	4	0	8	0	13	13
04:15 PM	0	1	0	0	1	6	1	0	0	7	0	1	4	1	5	0	3	2	0	5	1	18	19
04:30 PM	0	1	0	0	1	0	1	0	0	1	1	0	7	5	8	2	3	2	0	7	5	17	22
04:45 PM	0	1	0	0	1	5	1	0	0	6	2	0	1	1	3	1	2	2	0	5	1	15	16
Total	0	3	0	0	3	14	4	0	0	18	3	1	13	7	17	4	11	10	0	25	7	63	70
05:00 PM	0	0	0	0	0	2	1	0	0	3	1	0	0	0	1	0	3	3	0	6	0	10	10
05:15 PM	0	1	1	0	2	2	0	0	0	2	0	0	2	0	2	1	1	0	0	2	0	8	8
05:30 PM	0	0	0	0	0	2	0	0	0	2	0	0	0	0	0	0	4	0	0	4	0	6	6
05:45 PM	0	0	0	0	0	2	2	0	0	4	1	0	2	1	3	1	1	1	0	3	1	10	11
Total	0	1	1	0	2	8	3	0	0	11	2	0	4	1	6	2	9	4	0	15	1	34	35
Grand Total	0	4	1	0	5	22	7	0	0	29	5	1	17	8	23	6	20	14	0	40	8	97	105
Apprch %	0	80	20			75.9	24.1	0			21.7	4.3	73.9			15	50	35					
Total %	0	4.1	1		5.2	22.7	7.2	0		29.9	5.2	1	17.5		23.7	6.2	20.6	14.4		41.2	7.6	92.4	

	South Vincent Avenue Southbound				West Gladstone Street Westbound				South Vincent Avenue Northbound				West Gladstone Street Eastbound				
Start Time	Left	Thru	Right	App. Total	Left	Thru	Right	App. Total	Left	Thru	Right	App. Total	Left	Thru	Right	App. Total	Int. Total
Peak Hour Analysis From 04:30 PM to 05:15 PM - Peak 1 of 1																	
Peak Hour for Entire Intersection Begins at 04:30 PM																	
04:30 PM	0	**1**	0	1	0	**1**	0	1	1	0	**7**	**8**	**2**	**3**	2	**7**	**17**
04:45 PM	0	1	0	1	**5**	1	0	**6**	**2**	0	1	3	1	2	2	5	15
05:00 PM	0	0	0	0	2	1	0	3	1	0	0	1	0	3	**3**	6	10
05:15 PM	0	1	**1**	**2**	2	0	0	2	0	0	2	2	1	1	0	2	8
Total Volume	0	3	1	4	9	3	0	12	4	0	10	14	4	9	7	20	50
% App. Total	0	75	25		75	25	0		28.6	0	71.4		20	45	35		
PHF	.000	.750	.250	.500	.450	.750	.000	.500	.500	.000	.357	.438	.500	.750	.583	.714	.735

Counts Unlimited
PO Box 1178
Corona, CA 92878
(951) 268-6268

City of Azusa
N/S: South Vincent Avenue
E/W: West Gladstone Street
Weather: Clear

File Name : 17_AZU_Vincent_Gladstone PM
Site Code : 05117366
Start Date : 5/31/2017
Page No : 2

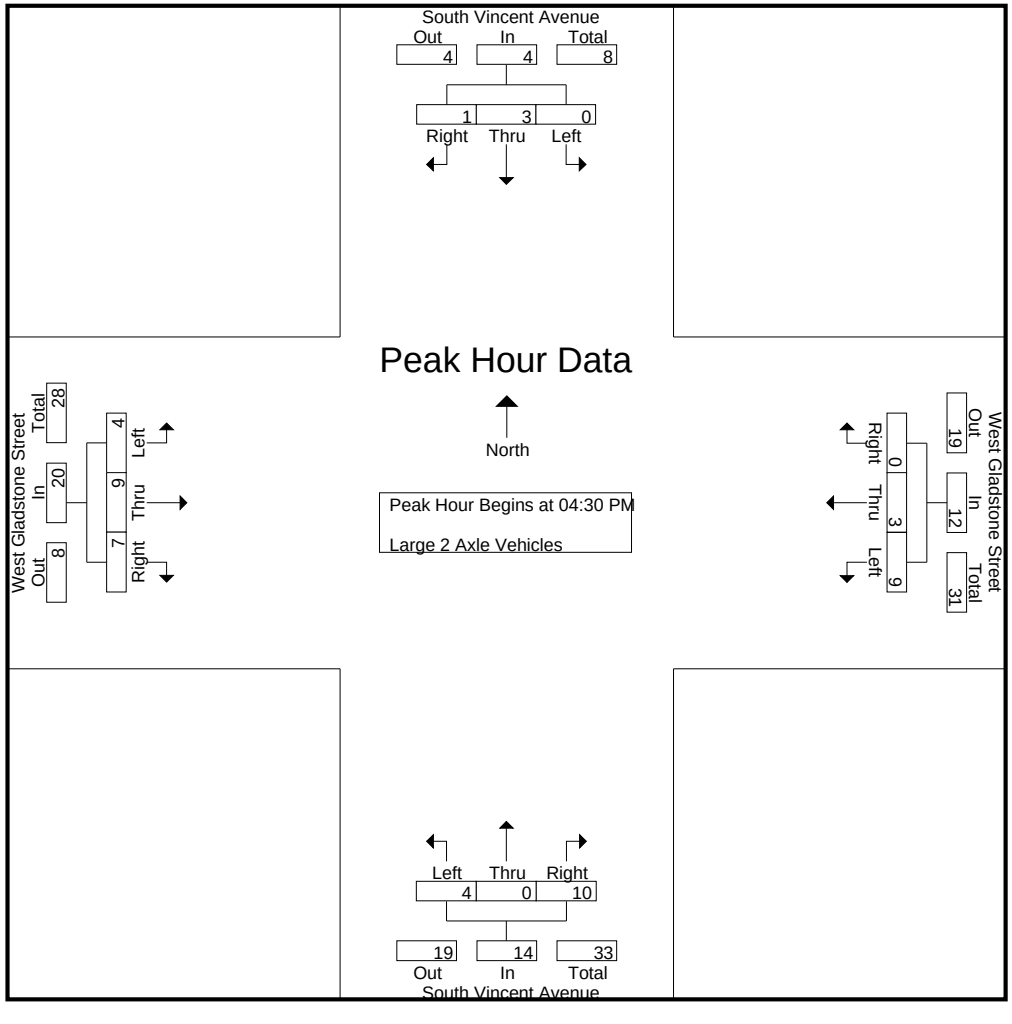

Counts Unlimited
PO Box 1178
Corona, CA 92878
(951) 268-6268

City of Azusa
N/S: South Vincent Avenue
E/W: West Gladstone Street
Weather: Clear

File Name : 17_AZU_Vincent_Gladstone PM
Site Code : 05117366
Start Date : 5/31/2017
Page No : 3

	South Vincent Avenue Southbound				West Gladstone Street Westbound				South Vincent Avenue Northbound				West Gladstone Street Eastbound				
Start Time	Left	Thru	Right	App. Total	Left	Thru	Right	App. Total	Left	Thru	Right	App. Total	Left	Thru	Right	App. Total	Int. Total
Peak Hour Analysis From 04:30 PM to 05:15 PM - Peak 1 of 1																	
Peak Hour for Each Approach Begins at:																	
	04:30 PM				04:30 PM				04:30 PM				04:30 PM				
+0 mins.	0	**1**	0	1	0	**1**	0	1	1	0	**7**	**8**	**2**	**3**	2	**7**	
+15 mins.	0	1	0	1	**5**	1	0	**6**	**2**	0	1	3	1	2	2	5	
+30 mins.	0	0	0	0	2	1	0	3	1	0	0	1	0	3	**3**	6	
+45 mins.	0	1	**1**	**2**	2	0	0	2	0	0	2	2	1	1	0	2	
Total Volume	0	3	1	4	9	3	0	12	4	0	10	14	4	9	7	20	
% App. Total	0	75	25		75	25	0		28.6	0	71.4		20	45	35		
PHF	.000	.750	.250	.500	.450	.750	.000	.500	.500	.000	.357	.438	.500	.750	.583	.714	

Counts Unlimited
PO Box 1178
Corona, CA 92878
(951) 268-6268

City of Azusa
N/S: South Vincent Avenue
E/W: West Gladstone Street
Weather: Clear

File Name : 17_AZU_Vincent_Gladstone PM
Site Code : 05117366
Start Date : 5/31/2017
Page No : 1

Groups Printed- 3 Axle Vehicles

	South Vincent Avenue Southbound					West Gladstone Street Westbound					South Vincent Avenue Northbound					West Gladstone Street Eastbound							
Start Time	Left	Thru	Right	RTOR	App. Total	Left	Thru	Right	RTOR	App. Total	Left	Thru	Right	RTOR	App. Total	Left	Thru	Right	RTOR	App. Total	Exclu. Total	Inclu. Total	Int. Total
04:00 PM	5	5	2	0	12	1	2	0	0	3	1	5	0	0	6	5	1	1	0	7	0	28	28
04:15 PM	4	5	2	0	11	0	0	0	0	0	0	7	3	0	10	4	0	0	0	4	0	25	25
04:30 PM	1	8	5	0	14	3	0	0	0	3	1	2	0	0	3	4	2	0	0	6	0	26	26
04:45 PM	2	3	0	0	5	1	0	0	0	1	0	7	0	0	7	2	1	0	0	3	0	16	16
Total	12	21	9	0	42	5	2	0	0	7	2	21	3	0	26	15	4	1	0	20	0	95	95
05:00 PM	4	3	0	0	7	0	1	0	0	1	0	4	0	0	4	0	0	0	0	0	0	12	12
05:15 PM	1	5	2	0	8	0	0	0	0	0	0	2	0	0	2	1	0	0	0	1	0	11	11
05:30 PM	1	8	0	0	9	1	1	0	0	2	0	1	0	0	1	1	0	0	0	1	0	13	13
05:45 PM	0	1	0	0	1	1	0	1	0	2	0	1	0	0	1	1	0	0	0	1	0	5	5
Total	6	17	2	0	25	2	2	1	0	5	0	8	0	0	8	3	0	0	0	3	0	41	41
Grand Total	18	38	11	0	67	7	4	1	0	12	2	29	3	0	34	18	4	1	0	23	0	136	136
Apprch %	26.9	56.7	16.4			58.3	33.3	8.3			5.9	85.3	8.8			78.3	17.4	4.3					
Total %	13.2	27.9	8.1		49.3	5.1	2.9	0.7		8.8	1.5	21.3	2.2		25	13.2	2.9	0.7		16.9	0	100	

	South Vincent Avenue Southbound				West Gladstone Street Westbound				South Vincent Avenue Northbound				West Gladstone Street Eastbound				
Start Time	Left	Thru	Right	App. Total	Left	Thru	Right	App. Total	Left	Thru	Right	App. Total	Left	Thru	Right	App. Total	Int. Total
Peak Hour Analysis From 04:30 PM to 05:15 PM - Peak 1 of 1																	
Peak Hour for Entire Intersection Begins at 04:30 PM																	
04:30 PM	1	**8**	**5**	**14**	**3**	0	0	**3**	**1**	2	0	3	**4**	**2**	0	**6**	**26**
04:45 PM	2	3	0	5	1	0	0	1	0	**7**	0	**7**	2	1	0	3	16
05:00 PM	**4**	3	0	7	0	**1**	0	1	0	4	0	4	0	0	0	0	12
05:15 PM	1	5	2	8	0	0	0	0	0	2	0	2	1	0	0	1	11
Total Volume	8	19	7	34	4	1	0	5	1	15	0	16	7	3	0	10	65
% App. Total	23.5	55.9	20.6		80	20	0		6.2	93.8	0		70	30	0		
PHF	.500	.594	.350	.607	.333	.250	.000	.417	.250	.536	.000	.571	.438	.375	.000	.417	.625

Counts Unlimited
PO Box 1178
Corona, CA 92878
(951) 268-6268

City of Azusa
N/S: South Vincent Avenue
E/W: West Gladstone Street
Weather: Clear

File Name : 17_AZU_Vincent_Gladstone PM
Site Code : 05117366
Start Date : 5/31/2017
Page No : 2

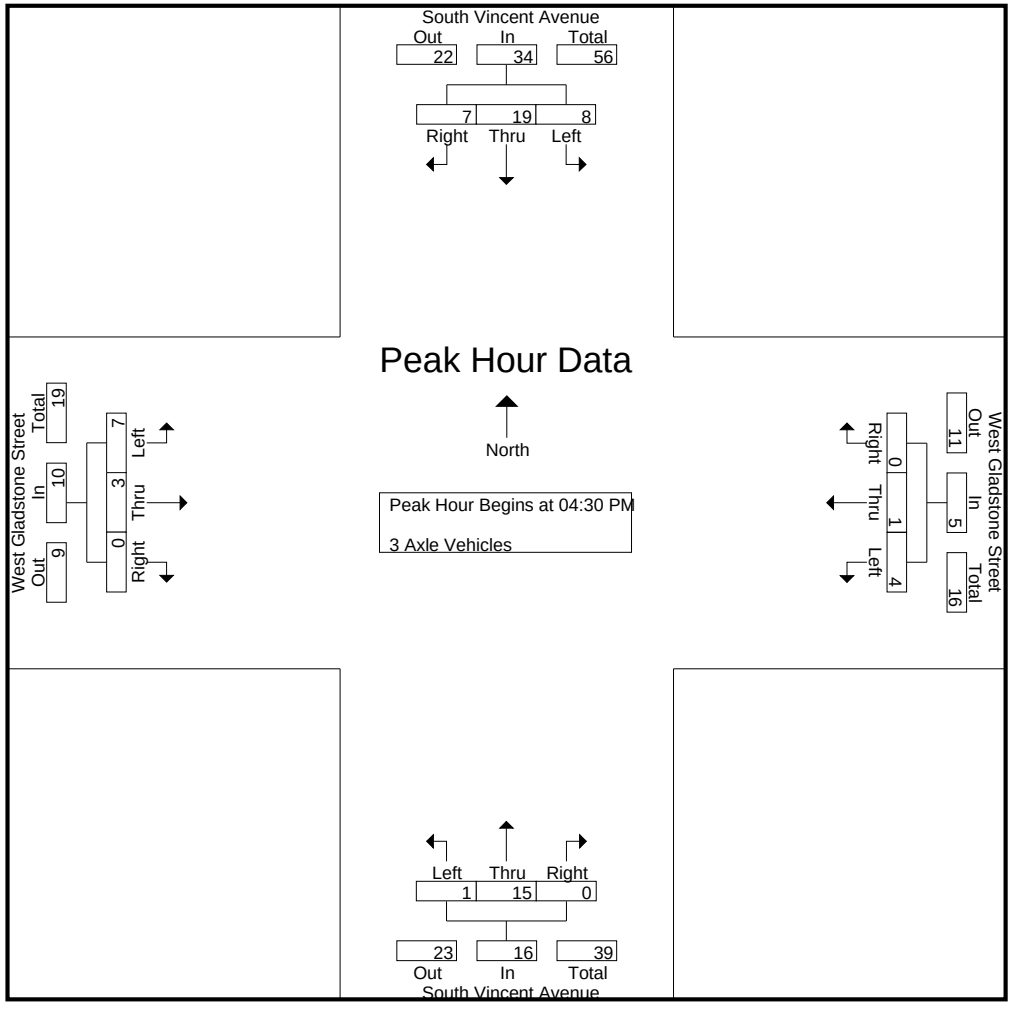

Counts Unlimited
PO Box 1178
Corona, CA 92878
(951) 268-6268

City of Azusa
N/S: South Vincent Avenue
E/W: West Gladstone Street
Weather: Clear

File Name : 17_AZU_Vincent_Gladstone PM
Site Code : 05117366
Start Date : 5/31/2017

	South Vincent Avenue Southbound				West Gladstone Street Westbound				South Vincent Avenue Northbound				West Gladstone Street Eastbound				
Start Time	Left	Thru	Right	App. Total	Left	Thru	Right	App. Total	Left	Thru	Right	App. Total	Left	Thru	Right	App. Total	Int. Total
Peak Hour Analysis From 04:30 PM to 05:15 PM - Peak 1 of 1																	
Peak Hour for Each Approach Begins at:																	
	04:30 PM				04:30 PM				04:30 PM				04:30 PM				
+0 mins.	1	**8**	**5**	**14**	**3**	0	0	**3**	**1**	2	0	3	**4**	**2**	0	**6**	
+15 mins.	2	3	0	5	1	0	0	1	0	**7**	0	**7**	2	1	0	3	
+30 mins.	**4**	3	0	7	0	**1**	0	1	0	4	0	4	0	0	0	0	
+45 mins.	1	5	2	8	0	0	0	0	0	2	0	2	1	0	0	1	
Total Volume	8	19	7	34	4	1	0	5	1	15	0	16	7	3	0	10	
% App. Total	23.5	55.9	20.6		80	20	0		6.2	93.8	0		70	30	0		
PHF	.500	.594	.350	.607	.333	.250	.000	.417	.250	.536	.000	.571	.438	.375	.000	.417	

Counts Unlimited
PO Box 1178
Corona, CA 92878
(951) 268-6268

City of Azusa
N/S: South Vincent Avenue
E/W: West Gladstone Street
Weather: Clear

File Name : 17_AZU_Vincent_Gladstone PM
Site Code : 05117366
Start Date : 5/31/2017
Page No : 1

Groups Printed- 4+ Axle Trucks

	South Vincent Avenue Southbound					West Gladstone Street Westbound					South Vincent Avenue Northbound					West Gladstone Street Eastbound							
Start Time	Left	Thru	Right	RTOR	App. Total	Left	Thru	Right	RTOR	App. Total	Left	Thru	Right	RTOR	App. Total	Left	Thru	Right	RTOR	App. Total	Exclu. Total	Inclu. Total	Int. Total
04:00 PM	3	1	3	2	7	0	2	0	0	2	5	0	2	0	7	2	0	1	0	3	2	19	21
04:15 PM	1	0	1	0	2	0	0	0	0	0	3	0	2	1	5	1	1	0	0	2	1	9	10
04:30 PM	0	1	1	0	2	0	2	0	0	2	1	0	0	0	1	0	0	0	0	0	0	5	5
04:45 PM	1	0	0	0	1	0	0	1	0	1	0	2	0	0	2	1	0	1	0	2	0	6	6
Total	5	2	5	2	12	0	4	1	0	5	9	2	4	1	15	4	1	2	0	7	3	39	42
05:00 PM	0	0	0	0	0	0	0	0	0	0	0	1	0	0	1	0	0	2	1	2	1	3	4
05:15 PM	2	0	1	0	3	0	0	0	0	0	1	0	0	0	1	1	1	0	0	2	0	6	6
05:30 PM	0	0	0	0	0	0	1	0	0	1	0	2	0	0	2	0	1	0	0	1	0	4	4
05:45 PM	0	0	2	1	2	0	0	0	0	0	0	0	0	0	0	1	1	1	0	3	1	5	6
Total	2	0	3	1	5	0	1	0	0	1	1	3	0	0	4	2	3	3	1	8	2	18	20
Grand Total	7	2	8	3	17	0	5	1	0	6	10	5	4	1	19	6	4	5	1	15	5	57	62
Apprch %	41.2	11.8	47.1			0	83.3	16.7			52.6	26.3	21.1			40	26.7	33.3					
Total %	12.3	3.5	14		29.8	0	8.8	1.8		10.5	17.5	8.8	7		33.3	10.5	7	8.8		26.3	8.1	91.9	

	South Vincent Avenue Southbound				West Gladstone Street Westbound				South Vincent Avenue Northbound				West Gladstone Street Eastbound				
Start Time	Left	Thru	Right	App. Total	Left	Thru	Right	App. Total	Left	Thru	Right	App. Total	Left	Thru	Right	App. Total	Int. Total
Peak Hour Analysis From 04:30 PM to 05:15 PM - Peak 1 of 1																	
Peak Hour for Entire Intersection Begins at 04:30 PM																	
04:30 PM	0	**1**	**1**	2	0	**2**	0	**2**	**1**	0	0	1	0	0	0	0	5
04:45 PM	1	0	0	1	0	0	**1**	1	0	**2**	0	**2**	**1**	0	1	**2**	**6**
05:00 PM	0	0	0	0	0	0	0	0	0	1	0	1	0	0	**2**	2	3
05:15 PM	**2**	0	1	**3**	0	0	0	0	1	0	0	1	1	**1**	0	2	6
Total Volume	3	1	2	6	0	2	1	3	2	3	0	5	2	1	3	6	20
% App. Total	50	16.7	33.3		0	66.7	33.3		40	60	0		33.3	16.7	50		
PHF	.375	.250	.500	.500	.000	.250	.250	.375	.500	.375	.000	.625	.500	.250	.375	.750	.833

Counts Unlimited
PO Box 1178
Corona, CA 92878
(951) 268-6268

City of Azusa
N/S: South Vincent Avenue
E/W: West Gladstone Street
Weather: Clear

File Name : 17_AZU_Vincent_Gladstone PM
Site Code : 05117366
Start Date : 5/31/2017
Page No : 2

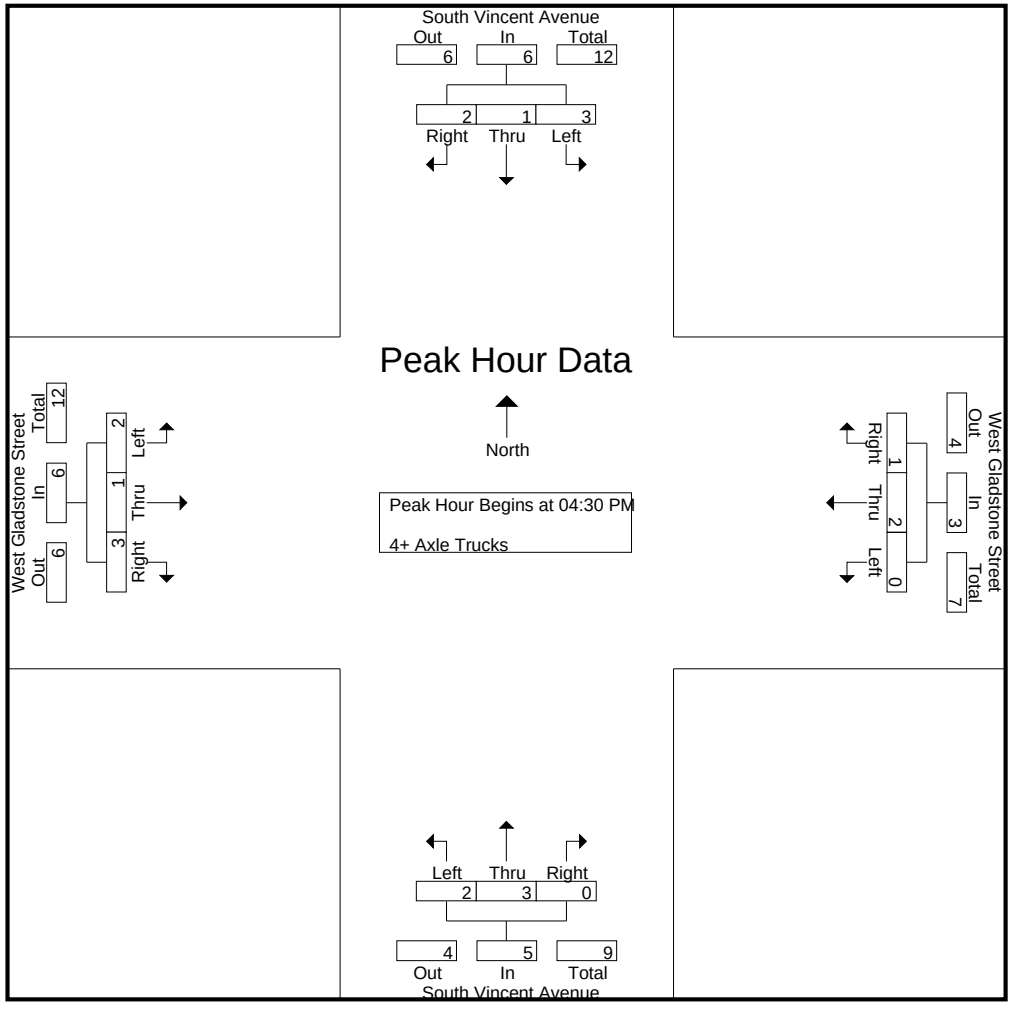

Counts Unlimited
PO Box 1178
Corona, CA 92878
(951) 268-6268

City of Azusa
N/S: South Vincent Avenue
E/W: West Gladstone Street
Weather: Clear

File Name : 17_AZU_Vincent_Gladstone PM
Site Code : 05117366
Start Date : 5/31/2017

	South Vincent Avenue Southbound				West Gladstone Street Westbound				South Vincent Avenue Northbound				West Gladstone Street Eastbound				
Start Time	Left	Thru	Right	App. Total	Left	Thru	Right	App. Total	Left	Thru	Right	App. Total	Left	Thru	Right	App. Total	Int. Total
Peak Hour Analysis From 04:30 PM to 05:15 PM - Peak 1 of 1																	
Peak Hour for Each Approach Begins at:																	
	04:30 PM				04:30 PM				04:30 PM				04:30 PM				
+0 mins.	0	**1**	**1**	2	0	**2**	0	**2**	**1**	0	0	1	0	0	0	0	
+15 mins.	1	0	0	1	0	0	**1**	1	0	**2**	0	**2**	**1**	0	1	**2**	
+30 mins.	0	0	0	0	0	0	0	0	0	1	0	1	0	0	**2**	2	
+45 mins.	**2**	0	1	**3**	0	0	0	0	1	0	0	1	1	**1**	0	2	
Total Volume	3	1	2	6	0	2	1	3	2	3	0	5	2	1	3	6	
% App. Total	50	16.7	33.3		0	66.7	33.3		40	60	0		33.3	16.7	50		
PHF	.375	.250	.500	.500	.000	.250	.250	.375	.500	.375	.000	.625	.500	.250	.375	.750	

Location: Azusa
N/S: South Vincent Avenue
E/W: West Gladstone Street

Date: 5/31/2017
Day: Wednesday

PEDESTRIANS

	North Leg South Vincent Avenue	East Leg West Gladstone Street	South Leg South Vincent Avenue	West Leg West Gladstone Street	TOTAL
7:00 AM	0	0	0	0	0
7:15 AM	0	0	0	0	0
7:30 AM	0	0	1	0	1
7:45 AM	0	0	0	0	0
8:00 AM	0	0	0	0	0
8:15 AM	0	0	0	0	0
8:30 AM	0	0	0	0	0
8:45 AM	0	0	0	0	0
TOTAL VOLUMES:	0	0	1	0	1

	North Leg South Vincent Avenue	East Leg West Gladstone Street	South Leg South Vincent Avenue	West Leg West Gladstone Street	TOTAL
4:00 PM	0	0	1	0	1
4:15 PM	0	0	1	0	1
4:30 PM	0	0	1	0	1
4:45 PM	0	0	0	0	0
5:00 PM	0	0	0	0	0
5:15 PM	0	0	0	0	0
5:30 PM	0	0	0	0	0
5:45 PM	0	0	0	0	0
TOTAL VOLUMES:	0	0	3	0	3

Counts Unlimited
P.O. Box 1178
Corona, CA 92878
(951) 268-6268

Location: Azusa
N/S: South Vincent Avenue
E/W: West Gladstone Street

Date: 5/31/2017
Day: Wednesday

BICYCLES

	North Leg South Vincent Avenue	East Leg West Gladstone Street	South Leg South Vincent Avenue	West Leg West Gladstone Street	TOTAL
7:00 AM	0	0	0	0	0
7:15 AM	0	0	0	0	0
7:30 AM	0	0	0	0	0
7:45 AM	0	0	0	0	0
8:00 AM	0	0	1	0	1
8:15 AM	0	0	0	0	0
8:30 AM	1	0	2	0	3
8:45 AM	0	0	0	0	0
TOTAL VOLUMES:	1	0	3	0	4

	North Leg South Vincent Avenue	East Leg West Gladstone Street	South Leg South Vincent Avenue	West Leg West Gladstone Street	TOTAL
4:00 PM	0	0	0	0	0
4:15 PM	0	0	0	0	0
4:30 PM	3	0	1	1	5
4:45 PM	1	0	2	0	3
5:00 PM	0	0	0	0	0
5:15 PM	1	0	1	0	2
5:30 PM	2	0	0	0	2
5:45 PM	0	0	0	0	0
TOTAL VOLUMES:	7	0	4	1	12

Counts Unlimited
P.O. Box 1178
Corona, CA 92878
(951) 268-6268

INTERSECTION TURNING MOVEMENT COUNTS

PREPARED BY: AimTD LLC. tel: 714 253 7888 cs@aimtd.com

DATE: Tue, Jun 12, 18

LOCATION: Irwindale
NORTH & SOUTH: Vincent
EAST & WEST: Arrow

PROJECT #: SC1780
LOCATION #: 17
CONTROL: SIGNAL

NOTES:

AM / PM / MD / OTHER / OTHER — ▲ N, ◄ W, E ►, S ▼

		NORTHBOUND Vincent			SOUTHBOUND Vincent			EASTBOUND Arrow			WESTBOUND Arrow				U-TURNS				
	LANES:	NL 1	NT 3	NR 0	SL 1	ST 2	SR 0	EL 1	ET 2	ER 1	WL 1	WT 2	WR 0	TOTAL	NB 0	SB 0	EB 0	WB 0	TTL
AM	7:00 AM	25	47	10	2	31	12	15	67	13	23	298	27	570	0	0	0	0	0
	7:15 AM	37	60	10	4	45	15	9	82	14	31	319	12	638	0	0	0	0	0
	7:30 AM	49	90	19	6	48	15	16	113	24	46	300	18	744	0	0	2	1	3
	7:45 AM	43	90	42	5	62	18	23	99	18	33	273	29	735	0	0	0	1	1
	8:00 AM	32	45	17	7	34	17	10	84	32	28	258	30	594	0	0	0	1	1
	8:15 AM	51	93	19	6	30	16	16	78	20	29	228	11	597	0	0	0	0	0
	8:30 AM	28	55	15	4	28	15	11	109	28	33	213	11	550	0	0	0	0	0
	8:45 AM	30	59	24	4	29	13	15	79	23	32	201	13	522	0	0	0	0	0
	VOLUMES	295	539	156	38	307	121	115	711	172	255	2,090	151	4,950	0	0	2	3	5
	APPROACH %	30%	54%	16%	8%	66%	26%	12%	71%	17%	10%	84%	6%						
	APP/DEPART	990	/	803	466	/	731	998	/	908	2,496	/	2,508	0					
	BEGIN PEAK HR		7:15 AM																
	VOLUMES	161	285	88	22	189	65	58	378	88	138	1,150	89	2,711					
	APPROACH %	30%	53%	16%	8%	68%	24%	11%	72%	17%	10%	84%	6%						
	PEAK HR FACTOR		0.763			0.812			0.856			0.946		0.911					
	APP/DEPART	534	/	430	276	/	412	524	/	491	1,377	/	1,378	0					
PM	4:00 PM	15	75	31	10	88	29	61	350	36	34	119	9	857	0	0	0	1	1
	4:15 PM	19	72	22	11	51	25	58	326	28	19	117	18	766	0	0	0	1	1
	4:30 PM	20	59	36	16	71	30	53	345	36	29	128	17	840	0	0	1	0	1
	4:45 PM	15	58	25	8	44	31	66	334	28	17	113	14	753	0	0	0	0	0
	5:00 PM	20	85	24	8	98	35	56	356	42	14	125	4	867	0	0	0	0	0
	5:15 PM	17	68	27	6	70	22	52	366	32	33	121	10	824	0	0	0	1	1
	5:30 PM	20	83	53	8	71	17	66	354	48	24	115	12	871	0	0	0	1	1
	5:45 PM	21	78	39	16	37	10	54	341	49	35	124	14	818	0	0	0	0	0
	VOLUMES	147	578	257	83	530	199	466	2,772	299	205	962	98	6,596	0	0	1	4	5
	APPROACH %	15%	59%	26%	10%	65%	25%	13%	78%	8%	16%	76%	8%						
	APP/DEPART	982	/	1,141	812	/	1,030	3,537	/	3,116	1,265	/	1,309	0					
	BEGIN PEAK HR		5:00 PM																
	VOLUMES	78	314	143	38	276	84	228	1,417	171	106	485	40	3,380					
	APPROACH %	15%	59%	27%	10%	69%	21%	13%	78%	9%	17%	77%	6%						
	PEAK HR FACTOR		0.857			0.706			0.970			0.912		0.970					
	APP/DEPART	535	/	582	398	/	551	1,816	/	1,600	631	/	647	0					

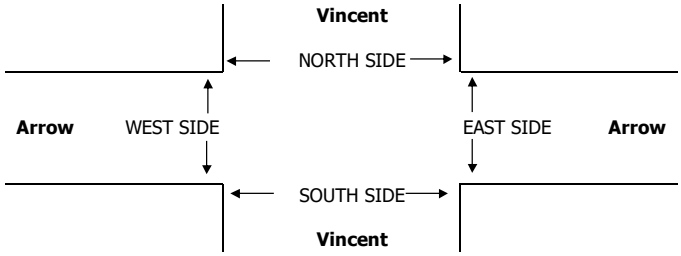

		PEDESTRIAN + BIKE CROSSINGS					PEDESTRIAN CROSSINGS					BICYCLE CROSSINGS				
		N SIDE	S SIDE	E SIDE	W SIDE	TOTAL	N SIDE	S SIDE	E SIDE	W SIDE	TOTAL	NS	SS	ES	WS	TOTAL
AM	7:00 AM	0	0	0	0	0	0	0	0	0	0	0	0	0	0	0
	7:15 AM	0	0	0	0	0	0	0	0	0	0	0	0	0	0	0
	7:30 AM	0	0	0	0	0	0	0	0	0	0	0	0	0	0	0
	7:45 AM	0	0	0	0	0	0	0	0	0	0	0	0	0	0	0
	8:00 AM	0	0	0	0	0	0	0	0	0	0	0	0	0	0	0
	8:15 AM	0	0	0	0	0	0	0	0	0	0	0	0	0	0	0
	8:30 AM	0	0	0	0	0	0	0	0	0	0	0	0	0	0	0
	8:45 AM	0	0	0	0	0	0	0	0	0	0	0	0	0	0	0
	TOTAL	0	0	0	0	0	0	0	0	0	0	0	0	0	0	0
	AM BEGIN PEAK HR	7:15 AM					0	0	0	0	0					
PM	4:00 PM	0	0	0	0	0	0	0	0	0	0	0	0	0	0	0
	4:15 PM	0	0	0	0	0	0	0	0	0	0	0	0	0	0	0
	4:30 PM	0	0	0	0	0	0	0	0	0	0	0	0	0	0	0
	4:45 PM	0	0	0	0	0	0	0	0	0	0	0	0	0	0	0
	5:00 PM	0	0	0	0	0	0	0	0	0	0	0	0	0	0	0
	5:15 PM	0	0	0	0	0	0	0	0	0	0	0	0	0	0	0
	5:30 PM	0	0	0	0	0	0	0	0	0	0	0	0	0	0	0
	5:45 PM	0	0	0	0	0	0	0	0	0	0	0	0	0	0	0
	TOTAL	0	0	0	0	0	0	0	0	0	0	0	0	0	0	0
	PM BEGIN PEAK HR	5:00 PM					0	0	0	0	0					

AimTD LLC

TURNING MOVEMENT COUNTS

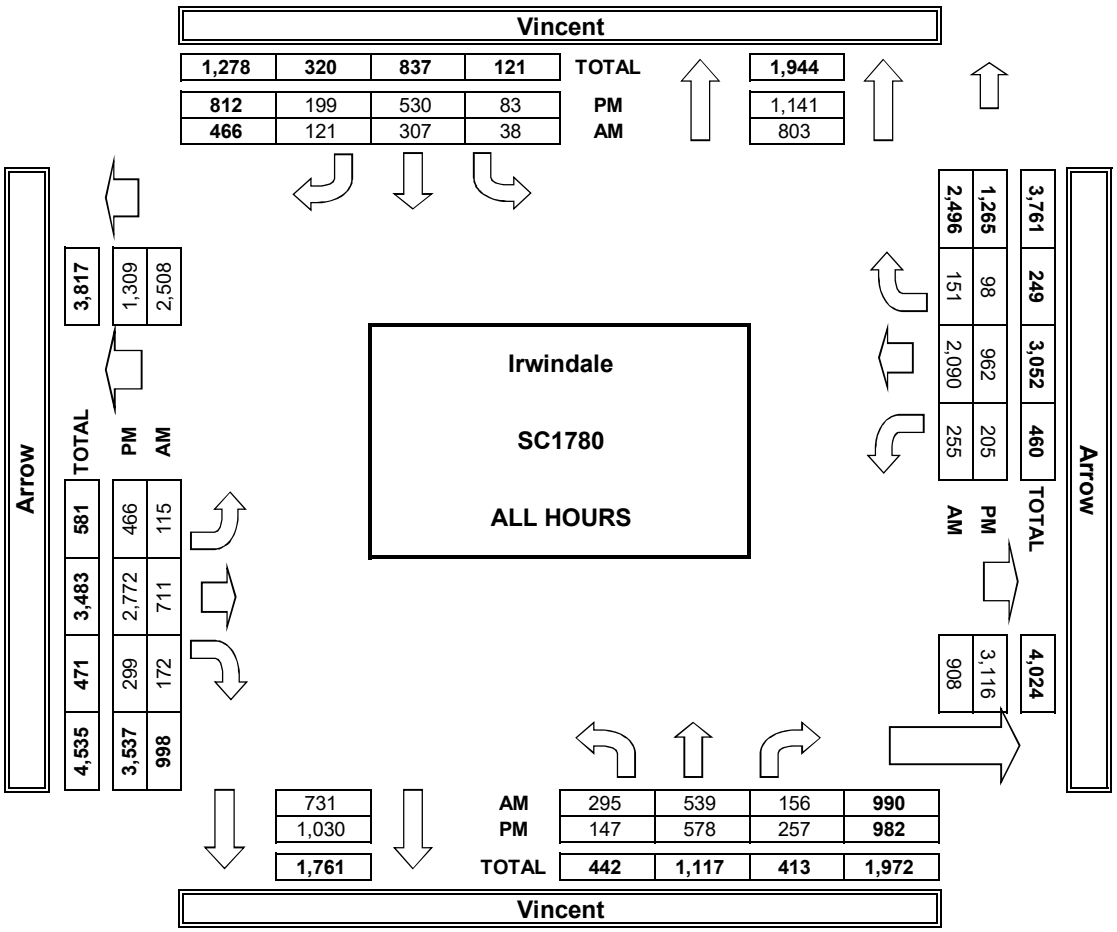

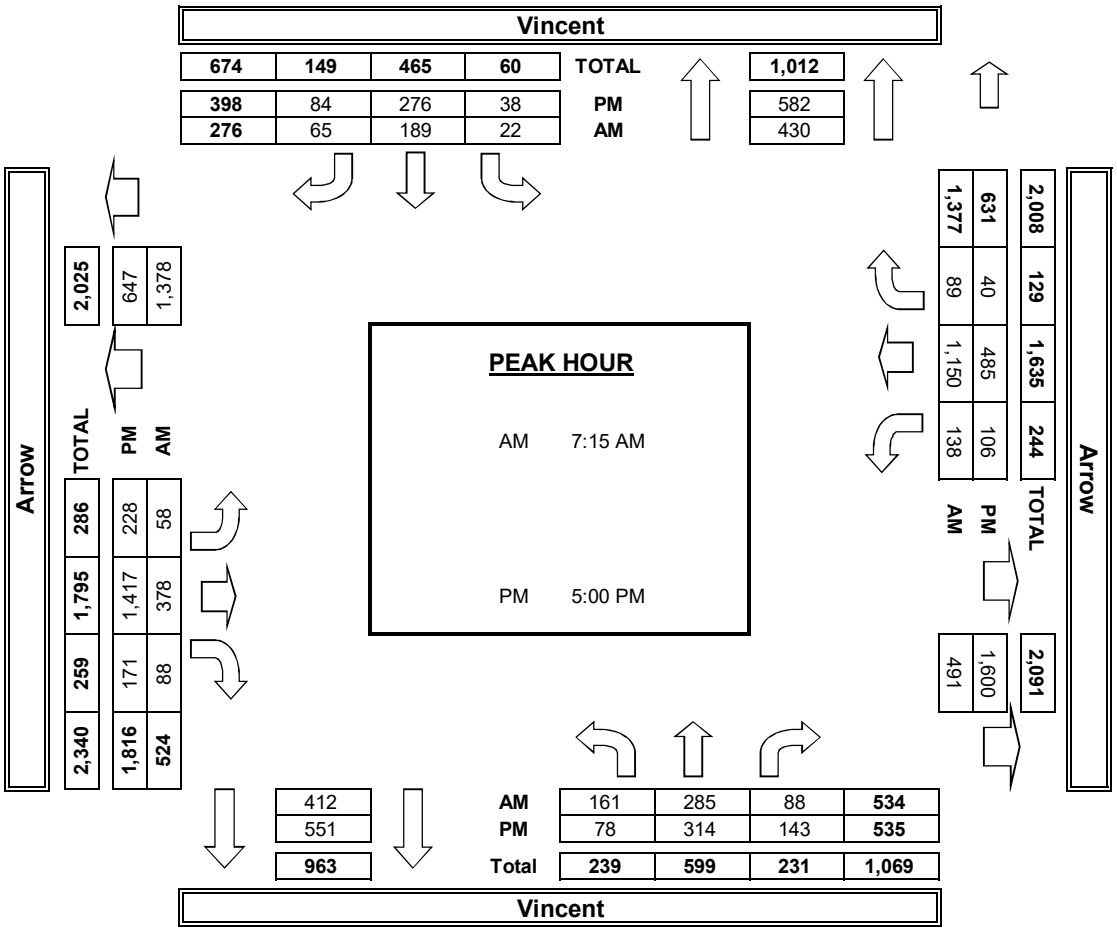

INTERSECTION TURNING MOVEMENT COUNTS

PREPARED BY: AimTD LLC. tel: 714 253 7888 cs@aimtd.com

DATE: Tue, Jun 5, 18

LOCATION: Irwindale
NORTH & SOUTH: Vincent
EAST & WEST: Cypress

PROJECT #: SC1780
LOCATION #: 18
CONTROL: SIGNAL

NOTES:

AM / PM / MD / OTHER / OTHER — ▲ N ◄ W E ► S ▼

		NORTHBOUND Vincent			SOUTHBOUND Vincent			EASTBOUND Cypress			WESTBOUND Cypress				U-TURNS				
	LANES:	NL 1	NT 2	NR 0	SL 1	ST 2	SR 0	EL 1	ET 2	ER 0	WL 1	WT 2	WR 0	TOTAL	NB 0	SB 0	EB 0	WB 0	TTL
AM	7:00 AM	27	73	9	5	63	11	0	38	9	46	288	11	580	0	0	0	0	0
	7:15 AM	32	94	18	12	94	19	5	61	5	53	252	12	657	0	0	0	0	0
	7:30 AM	36	115	36	22	103	14	12	96	15	36	203	14	702	0	0	0	0	0
	7:45 AM	56	153	42	18	107	22	7	74	13	62	194	29	777	0	0	0	0	0
	8:00 AM	38	105	29	13	94	16	10	72	17	39	143	23	599	0	0	0	0	0
	8:15 AM	26	92	17	9	75	10	5	61	10	26	133	8	472	0	0	0	0	0
	8:30 AM	22	87	10	5	62	10	5	58	3	25	110	13	410	0	0	0	0	0
	8:45 AM	15	68	20	7	46	9	14	60	13	28	110	12	402	0	0	0	0	0
	VOLUMES	252	787	181	91	644	111	58	520	85	315	1,433	122	4,599	0	0	0	0	0
	APPROACH %	21%	65%	15%	11%	76%	13%	9%	78%	13%	17%	77%	7%						
	APP/DEPART	1,220	/	967	846	/	1,044	663	/	792	1,870	/	1,796	0					
	BEGIN PEAK HR		7:15 AM																
	VOLUMES	162	467	125	65	398	71	34	303	50	190	792	78	2,735					
	APPROACH %	21%	62%	17%	12%	75%	13%	9%	78%	13%	18%	75%	7%						
	PEAK HR FACTOR		0.751			0.908			0.787			0.836		0.880					
	APP/DEPART	754	/	579	534	/	638	387	/	493	1,060	/	1,025	0					
PM	4:00 PM	16	96	27	11	115	12	20	232	29	25	61	3	647	0	0	0	0	0
	4:15 PM	18	99	28	11	99	6	17	269	34	19	63	9	672	0	0	0	0	0
	4:30 PM	18	99	27	9	104	9	17	259	26	23	86	7	684	0	0	0	0	0
	4:45 PM	12	103	38	14	94	6	24	240	22	19	86	9	667	0	0	0	0	0
	5:00 PM	13	121	38	15	123	7	23	249	25	20	71	12	717	0	0	0	1	1
	5:15 PM	18	110	33	10	113	9	26	257	33	23	70	11	713	0	0	0	0	0
	5:30 PM	14	106	44	20	102	6	22	234	23	25	78	9	683	0	0	0	0	0
	5:45 PM	14	110	23	14	110	8	17	244	31	24	76	9	680	0	0	0	0	0
	VOLUMES	123	844	258	104	860	63	166	1,984	223	178	591	69	5,463	0	0	0	1	1
	APPROACH %	10%	69%	21%	10%	84%	6%	7%	84%	9%	21%	71%	8%						
	APP/DEPART	1,225	/	1,079	1,027	/	1,260	2,373	/	2,347	838	/	777	0					
	BEGIN PEAK HR		5:00 PM																
	VOLUMES	59	447	138	59	448	30	88	984	112	92	295	41	2,793					
	APPROACH %	9%	69%	21%	11%	83%	6%	7%	83%	9%	21%	69%	10%						
	PEAK HR FACTOR		0.936			0.926			0.937			0.955		0.974					
	APP/DEPART	644	/	576	537	/	651	1,184	/	1,182	428	/	384	0					

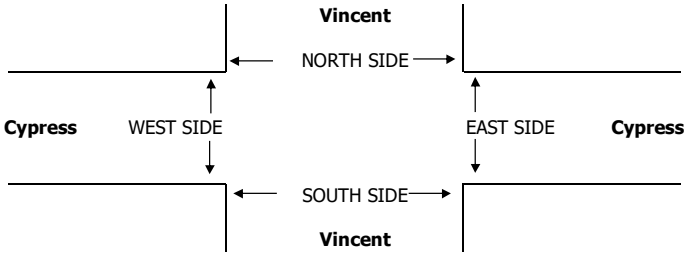

		PEDESTRIAN + BIKE CROSSINGS					PEDESTRIAN CROSSINGS					BICYCLE CROSSINGS				
		N SIDE	S SIDE	E SIDE	W SIDE	TOTAL	N SIDE	S SIDE	E SIDE	W SIDE	TOTAL	NS	SS	ES	WS	TOTAL
AM	7:00 AM	0	0	0	0	0	0	0	0	0	0	0	0	0	0	0
	7:15 AM	0	0	0	0	0	0	0	0	0	0	0	0	0	0	0
	7:30 AM	0	0	0	0	0	0	0	0	0	0	0	0	0	0	0
	7:45 AM	0	0	0	0	0	0	0	0	0	0	0	0	0	0	0
	8:00 AM	0	0	0	0	0	0	0	0	0	0	0	0	0	0	0
	8:15 AM	0	0	0	0	0	0	0	0	0	0	0	0	0	0	0
	8:30 AM	0	0	0	0	0	0	0	0	0	0	0	0	0	0	0
	8:45 AM	0	0	0	0	0	0	0	0	0	0	0	0	0	0	0
	TOTAL	0	0	0	0	0	0	0	0	0	0	0	0	0	0	0
	AM BEGIN PEAK HR	7:15 AM					0	0	0	0	0					
PM	4:00 PM	0	0	0	0	0	0	0	0	0	0	0	0	0	0	0
	4:15 PM	0	0	0	0	0	0	0	0	0	0	0	0	0	0	0
	4:30 PM	0	0	0	0	0	0	0	0	0	0	0	0	0	0	0
	4:45 PM	0	0	0	0	0	0	0	0	0	0	0	0	0	0	0
	5:00 PM	0	0	0	0	0	0	0	0	0	0	0	0	0	0	0
	5:15 PM	0	0	0	0	0	0	0	0	0	0	0	0	0	0	0
	5:30 PM	0	0	0	0	0	0	0	0	0	0	0	0	0	0	0
	5:45 PM	0	0	0	0	0	0	0	0	0	0	0	0	0	0	0
	TOTAL	0	0	0	0	0	0	0	0	0	0	0	0	0	0	0
	PM BEGIN PEAK HR	5:00 PM					0	0	0	0	0					

AimTD LLC

TURNING MOVEMENT COUNTS

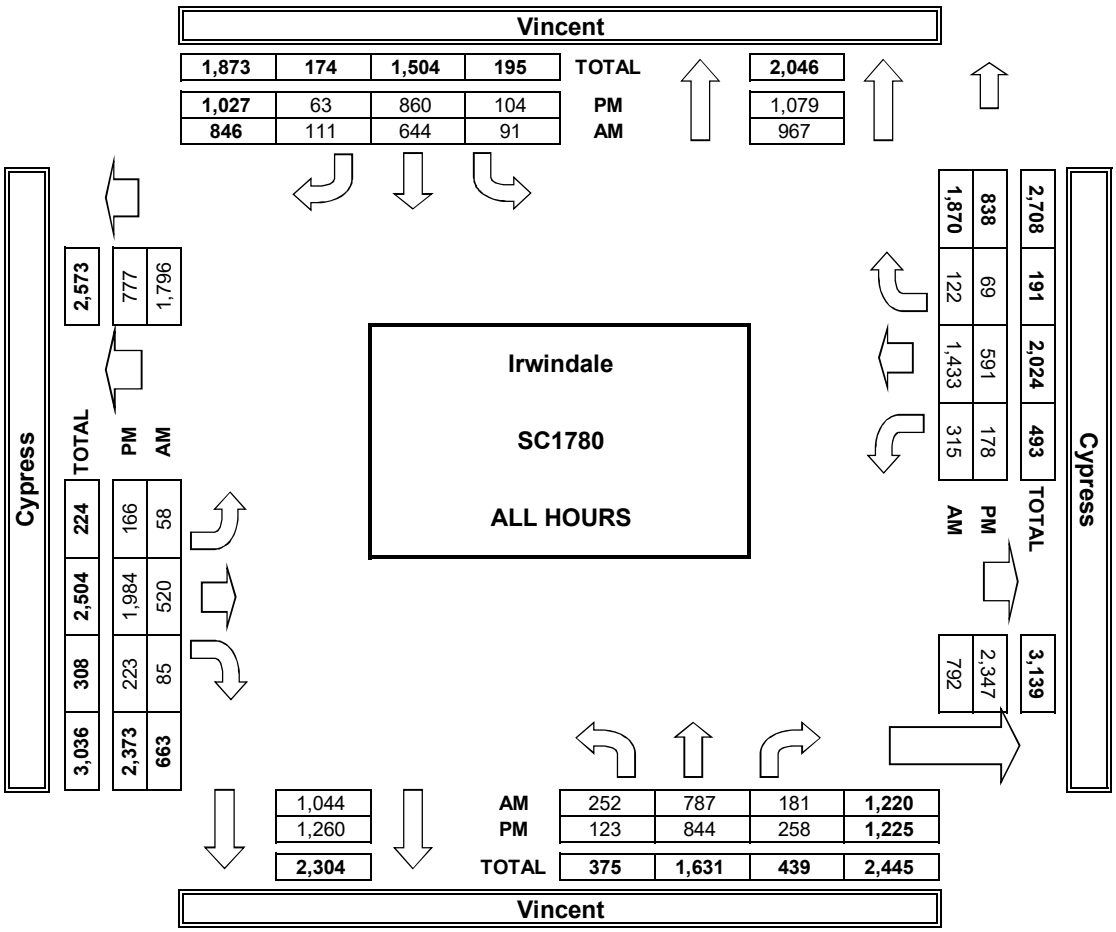

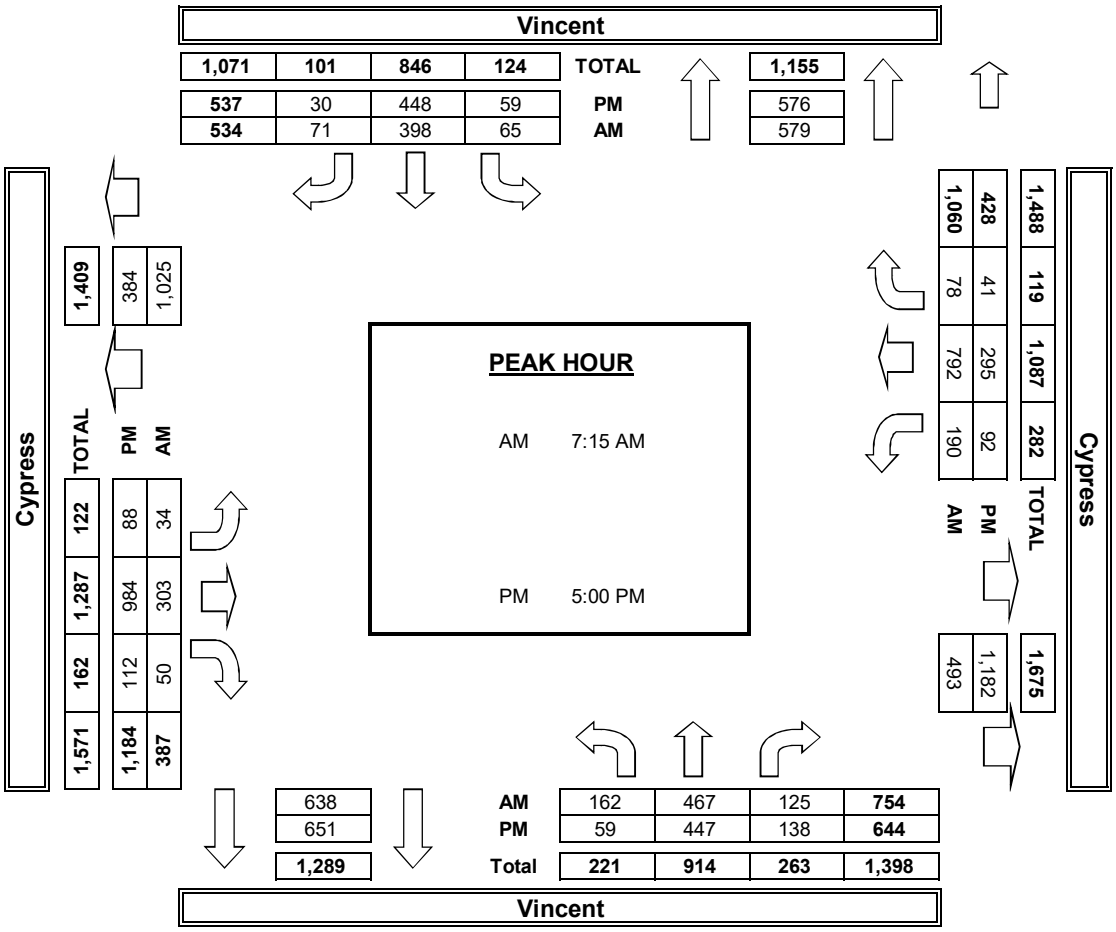

INTERSECTION TURNING MOVEMENT COUNTS

PREPARED BY: AimTD LLC. tel: 714 253 7888 cs@aimtd.com

DATE: Tue, Jun 5, 18

LOCATION: Irwindale
NORTH & SOUTH: Vincent
EAST & WEST: San Bernardino

PROJECT #: SC1780
LOCATION #: 19
CONTROL: SIGNAL

NOTES:

AM / PM / MD / OTHER / OTHER — ▲ N ◄ W E ► S ▼

		NORTHBOUND Vincent			SOUTHBOUND Vincent			EASTBOUND San Bernardino			WESTBOUND San Bernardino			
	LANES:	NL 1	NT 2	NR 0	SL 1	ST 2	SR 0	EL 1	ET 2	ER 0	WL 1	WT 2	WR 0	TOTAL
AM	7:00 AM	21	85	11	10	108	19	11	42	7	18	152	14	498
	7:15 AM	22	109	11	18	139	17	12	72	13	22	142	19	596
	7:30 AM	21	140	12	17	126	28	22	97	20	30	157	38	708
	7:45 AM	38	162	16	12	144	27	32	83	20	24	162	55	775
	8:00 AM	25	135	11	23	147	27	16	78	14	23	136	19	654
	8:15 AM	26	116	15	23	95	23	14	66	18	25	97	12	530
	8:30 AM	17	110	10	8	92	20	11	54	11	10	74	13	430
	8:45 AM	25	99	14	15	76	12	14	69	11	14	83	8	440
	VOLUMES	195	956	100	126	927	173	132	561	114	166	1,003	178	4,631
	APPROACH %	16%	76%	8%	10%	76%	14%	16%	70%	14%	12%	74%	13%	
	APP/DEPART	1,251	/	1,266	1,226	/	1,215	807	/	787	1,347	/	1,363	0
	BEGIN PEAK HR		7:15 AM											
	VOLUMES	106	546	50	70	556	99	82	330	67	99	597	131	2,733
	APPROACH %	15%	78%	7%	10%	77%	14%	17%	69%	14%	12%	72%	16%	
	PEAK HR FACTOR		0.813			0.920			0.862			0.858		0.882
	APP/DEPART	702	/	759	725	/	727	479	/	450	827	/	797	0
PM	4:00 PM	23	119	17	14	129	10	15	137	21	19	73	14	591
	4:15 PM	23	130	23	21	145	12	28	152	42	22	67	24	689
	4:30 PM	18	126	16	19	145	12	24	167	35	26	81	18	687
	4:45 PM	24	144	22	17	132	10	30	151	21	25	76	18	670
	5:00 PM	27	139	19	16	152	13	28	150	23	34	57	24	682
	5:15 PM	18	139	14	24	157	12	33	171	31	14	66	16	695
	5:30 PM	25	141	22	19	133	13	21	179	35	25	74	22	709
	5:45 PM	16	132	18	24	155	9	32	150	16	25	73	17	667
	VOLUMES	174	1,070	151	154	1,148	91	211	1,257	224	190	567	153	5,390
	APPROACH %	12%	77%	11%	11%	82%	7%	12%	74%	13%	21%	62%	17%	
	APP/DEPART	1,395	/	1,434	1,393	/	1,577	1,692	/	1,562	910	/	817	0
	BEGIN PEAK HR		4:45 PM											
	VOLUMES	94	563	77	76	574	48	112	651	110	98	273	80	2,756
	APPROACH %	13%	77%	10%	11%	82%	7%	13%	75%	13%	22%	61%	18%	
	PEAK HR FACTOR		0.966			0.904			0.929			0.932		0.972
	APP/DEPART	734	/	755	698	/	789	873	/	804	451	/	408	0

U-TURNS

	NB	SB	EB	WB	TTL
7:00 AM	1	0	0	0	1
7:15 AM	2	0	0	0	2
7:30 AM	1	0	0	0	1
7:45 AM	1	0	0	0	1
8:00 AM	1	0	0	0	1
8:15 AM	0	0	0	0	0
8:30 AM	0	0	0	0	0
8:45 AM	2	0	0	0	2
VOLUMES	8	0	0	0	8
4:00 PM	2	0	0	0	2
4:15 PM	2	0	0	0	2
4:30 PM	2	0	0	0	2
4:45 PM	2	0	0	0	2
5:00 PM	2	0	0	0	2
5:15 PM	3	0	0	0	3
5:30 PM	0	0	0	0	0
5:45 PM	2	0	0	0	2
VOLUMES	15	0	0	0	15

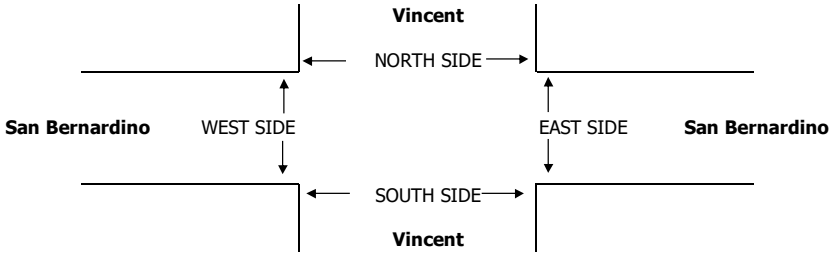

		PEDESTRIAN + BIKE CROSSINGS					PEDESTRIAN CROSSINGS					BICYCLE CROSSINGS				
		N SIDE	S SIDE	E SIDE	W SIDE	TOTAL	N SIDE	S SIDE	E SIDE	W SIDE	TOTAL	NS	SS	ES	WS	TOTAL
AM	7:00 AM	0	0	0	0	0	0	0	0	0	0	0	0	0	0	0
	7:15 AM	0	0	0	0	0	0	0	0	0	0	0	0	0	0	0
	7:30 AM	0	0	0	0	0	0	0	0	0	0	0	0	0	0	0
	7:45 AM	0	0	0	0	0	0	0	0	0	0	0	0	0	0	0
	8:00 AM	0	0	0	0	0	0	0	0	0	0	0	0	0	0	0
	8:15 AM	0	0	0	0	0	0	0	0	0	0	0	0	0	0	0
	8:30 AM	0	0	0	0	0	0	0	0	0	0	0	0	0	0	0
	8:45 AM	0	0	0	0	0	0	0	0	0	0	0	0	0	0	0
	TOTAL	0	0	0	0	0	0	0	0	0	0	0	0	0	0	0
	AM BEGIN PEAK HR	7:15 AM					0	0	0	0	0					
PM	4:00 PM	0	0	0	0	0	0	0	0	0	0	0	0	0	0	0
	4:15 PM	0	0	0	0	0	0	0	0	0	0	0	0	0	0	0
	4:30 PM	0	0	0	0	0	0	0	0	0	0	0	0	0	0	0
	4:45 PM	0	0	0	0	0	0	0	0	0	0	0	0	0	0	0
	5:00 PM	0	0	0	0	0	0	0	0	0	0	0	0	0	0	0
	5:15 PM	0	0	0	0	0	0	0	0	0	0	0	0	0	0	0
	5:30 PM	0	0	0	0	0	0	0	0	0	0	0	0	0	0	0
	5:45 PM	0	0	0	0	0	0	0	0	0	0	0	0	0	0	0
	TOTAL	0	0	0	0	0	0	0	0	0	0	0	0	0	0	0
	PM BEGIN PEAK HR	4:45 PM					0	0	0	0	0					

AimTD LLC

TURNING MOVEMENT COUNTS

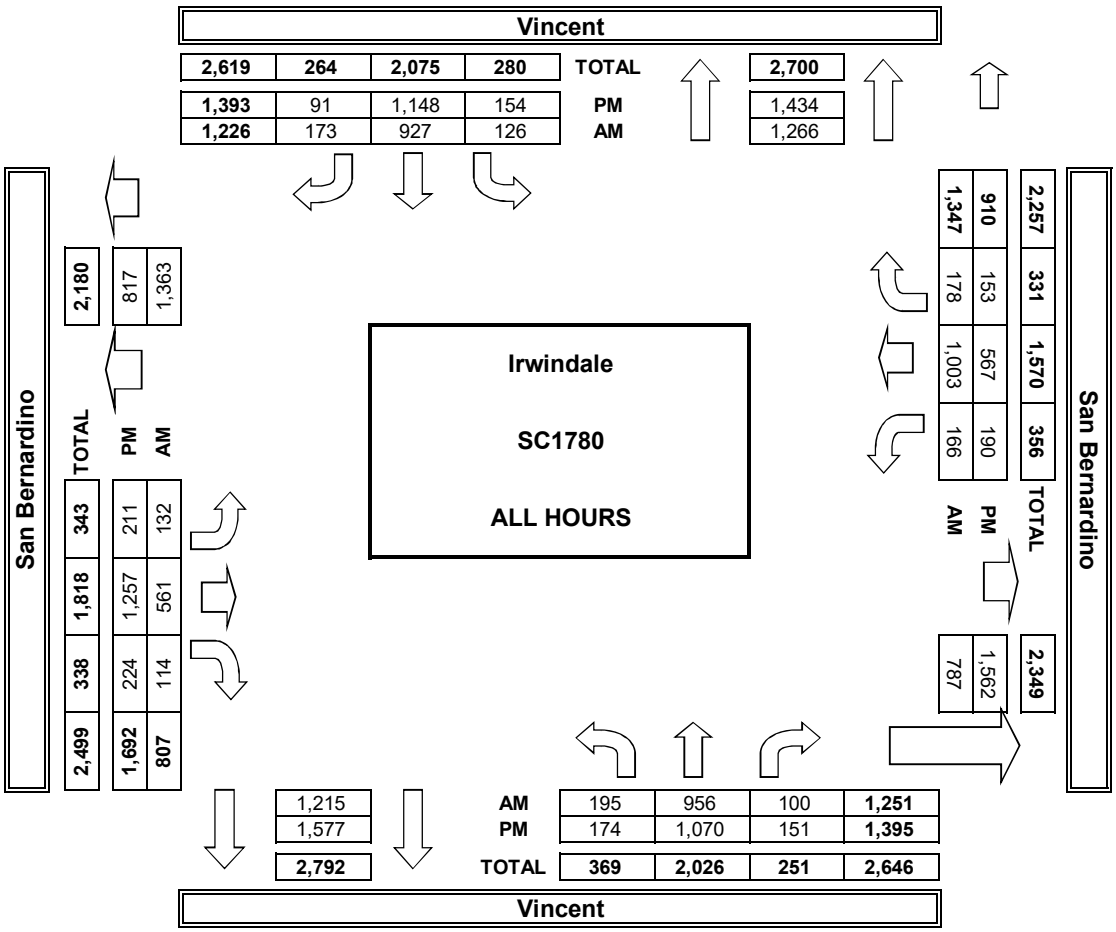

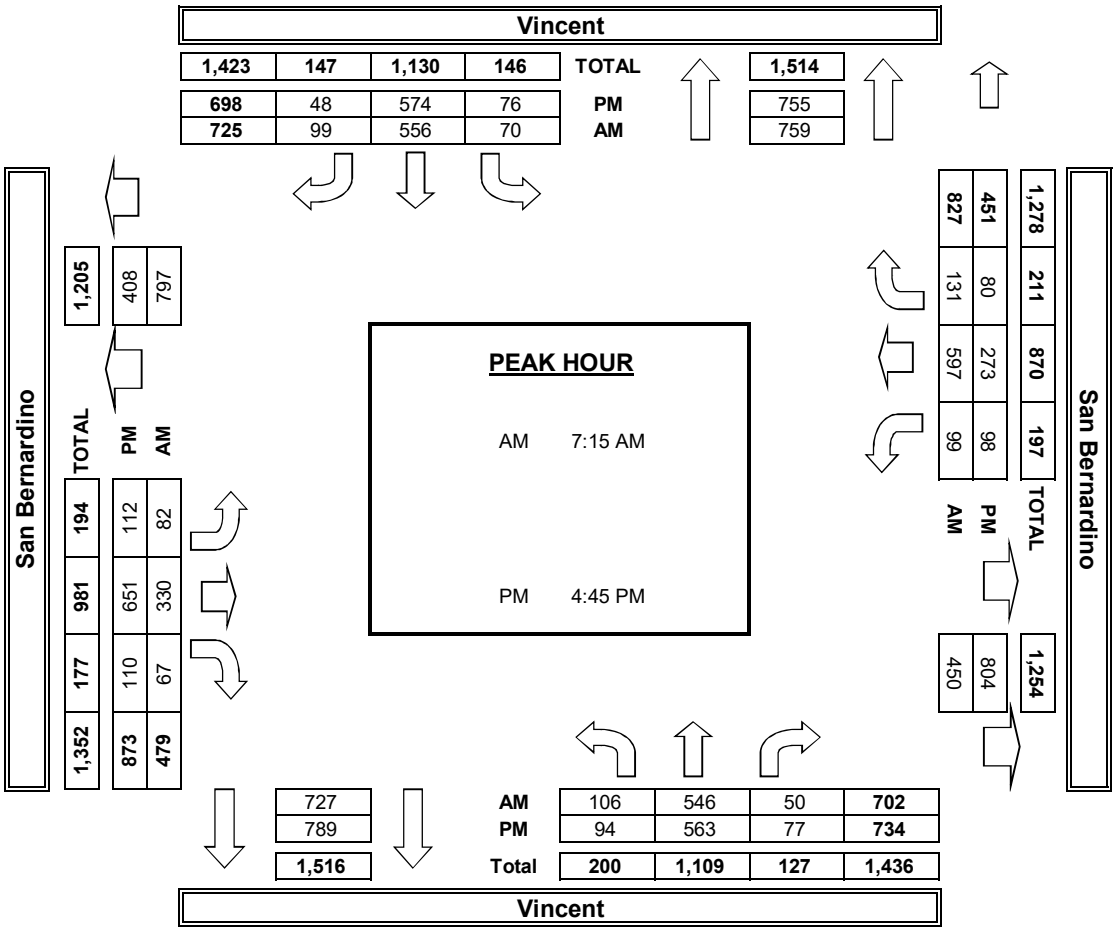

INTERSECTION TURNING MOVEMENT COUNTS

T218

PREPARED BY: AimTD LLC. tel: 714 253 7888 cs@aimtd.com

DATE: Tue, Jun 5, 18

LOCATION: Irwindale
NORTH & SOUTH: Vincent
EAST & WEST: Badillo

PROJECT #: SC1780
LOCATION #: 20
CONTROL: SIGNAL

NOTES:

AM / PM / MD / OTHER / OTHER — ▲ N ◄ W E ► S ▼

		NORTHBOUND Vincent			SOUTHBOUND Vincent			EASTBOUND Badillo			WESTBOUND Badillo				U-TURNS				
	LANES:	NL 1	NT 2	NR 0	SL 1	ST 3	SR 0	EL 1	ET 3	ER 0	WL 1	WT 2	WR 0	TOTAL	NB 0	SB 0	EB 0	WB 0	TTL
AM	7:00 AM	13	91	20	3	85	23	5	49	14	19	233	11	566	2	0	0	1	3
	7:15 AM	18	131	21	7	138	39	7	104	18	21	194	27	725	1	1	2	0	4
	7:30 AM	29	152	50	10	148	26	6	138	30	29	190	25	833	0	2	1	0	3
	7:45 AM	32	201	52	16	151	28	11	145	36	30	211	11	924	1	1	2	2	6
	8:00 AM	26	145	54	9	143	28	7	119	29	30	175	25	790	1	3	1	1	6
	8:15 AM	25	131	23	7	108	18	6	92	18	35	173	15	651	2	0	0	0	2
	8:30 AM	15	124	26	4	89	21	4	81	21	26	136	9	556	2	1	0	0	3
	8:45 AM	13	133	29	7	98	15	5	96	16	23	99	12	546	0	1	1	0	2
	VOLUMES	171	1,108	275	63	960	198	51	824	182	213	1,411	135	5,591	9	9	7	4	29
	APPROACH %	11%	71%	18%	5%	79%	16%	5%	78%	17%	12%	80%	8%						
	APP/DEPART	1,554	/	1,296	1,221	/	1,360	1,057	/	1,157	1,759	/	1,778	0					
	BEGIN PEAK HR		7:15 AM																
	VOLUMES	105	629	177	42	580	121	31	506	113	110	770	88	3,272					
	APPROACH %	12%	69%	19%	6%	78%	16%	5%	78%	17%	11%	80%	9%						
	PEAK HR FACTOR		0.799			0.953			0.846			0.960		0.885					
	APP/DEPART	911	/	749	743	/	803	650	/	721	968	/	999	0					
PM	4:00 PM	26	139	28	9	153	12	16	192	24	31	85	9	724	0	0	1	1	2
	4:15 PM	18	160	30	12	187	9	13	238	36	23	94	15	835	2	1	3	0	6
	4:30 PM	28	143	45	21	178	14	12	214	36	33	116	12	852	0	2	2	1	5
	4:45 PM	15	151	28	13	150	10	16	234	47	31	114	18	827	0	1	1	0	2
	5:00 PM	20	158	38	17	176	15	13	232	53	29	98	13	862	0	0	0	0	0
	5:15 PM	21	119	34	25	167	12	18	264	43	34	138	13	888	0	2	2	2	6
	5:30 PM	23	161	48	10	170	9	13	224	34	37	90	9	828	1	1	0	0	2
	5:45 PM	29	146	24	10	189	17	21	233	42	30	95	21	857	0	2	6	0	8
	VOLUMES	180	1,177	275	117	1,370	98	122	1,831	315	248	830	110	6,673	3	9	15	4	31
	APPROACH %	11%	72%	17%	7%	86%	6%	5%	81%	14%	21%	70%	9%						
	APP/DEPART	1,632	/	1,403	1,585	/	1,932	2,268	/	2,218	1,188	/	1,120	0					
	BEGIN PEAK HR		5:00 PM																
	VOLUMES	93	584	144	62	702	53	65	953	172	130	421	56	3,435					
	APPROACH %	11%	71%	18%	8%	86%	6%	5%	80%	14%	21%	69%	9%						
	PEAK HR FACTOR		0.885			0.946			0.915			0.820		0.967					
	APP/DEPART	821	/	702	817	/	1,003	1,190	/	1,156	607	/	574	0					

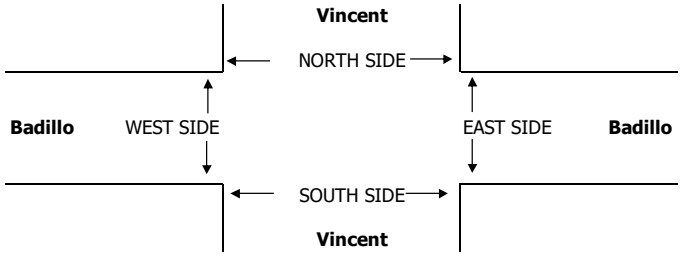

		PEDESTRIAN + BIKE CROSSINGS					PEDESTRIAN CROSSINGS					BICYCLE CROSSINGS				
		N SIDE	S SIDE	E SIDE	W SIDE	TOTAL	N SIDE	S SIDE	E SIDE	W SIDE	TOTAL	NS	SS	ES	WS	TOTAL
AM	7:00 AM	0	0	0	0	0	0	0	0	0	0	0	0	0	0	0
	7:15 AM	0	0	0	0	0	0	0	0	0	0	0	0	0	0	0
	7:30 AM	0	0	0	0	0	0	0	0	0	0	0	0	0	0	0
	7:45 AM	0	0	0	0	0	0	0	0	0	0	0	0	0	0	0
	8:00 AM	0	0	0	0	0	0	0	0	0	0	0	0	0	0	0
	8:15 AM	0	0	0	0	0	0	0	0	0	0	0	0	0	0	0
	8:30 AM	0	0	0	0	0	0	0	0	0	0	0	0	0	0	0
	8:45 AM	0	0	0	0	0	0	0	0	0	0	0	0	0	0	0
	TOTAL	0	0	0	0	0	0	0	0	0	0	0	0	0	0	0
	AM BEGIN PEAK HR	7:15 AM					0	0	0	0	0					
PM	4:00 PM	0	0	0	0	0	0	0	0	0	0	0	0	0	0	0
	4:15 PM	0	0	0	0	0	0	0	0	0	0	0	0	0	0	0
	4:30 PM	0	0	0	0	0	0	0	0	0	0	0	0	0	0	0
	4:45 PM	0	0	0	0	0	0	0	0	0	0	0	0	0	0	0
	5:00 PM	0	0	0	0	0	0	0	0	0	0	0	0	0	0	0
	5:15 PM	0	0	0	0	0	0	0	0	0	0	0	0	0	0	0
	5:30 PM	0	0	0	0	0	0	0	0	0	0	0	0	0	0	0
	5:45 PM	0	0	0	0	0	0	0	0	0	0	0	0	0	0	0
	TOTAL	0	0	0	0	0	0	0	0	0	0	0	0	0	0	0
	PM BEGIN PEAK HR	5:00 PM					0	0	0	0	0					

AimTD LLC

TURNING MOVEMENT COUNTS

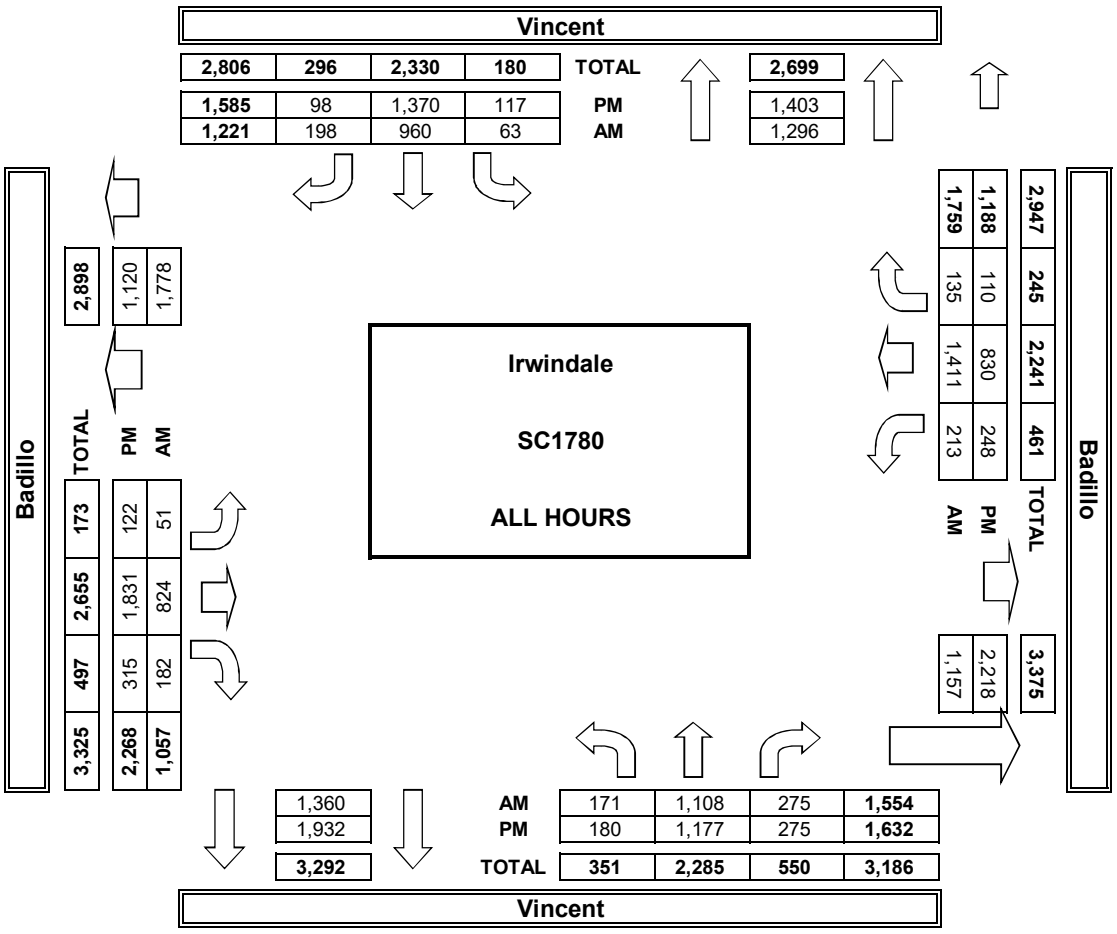

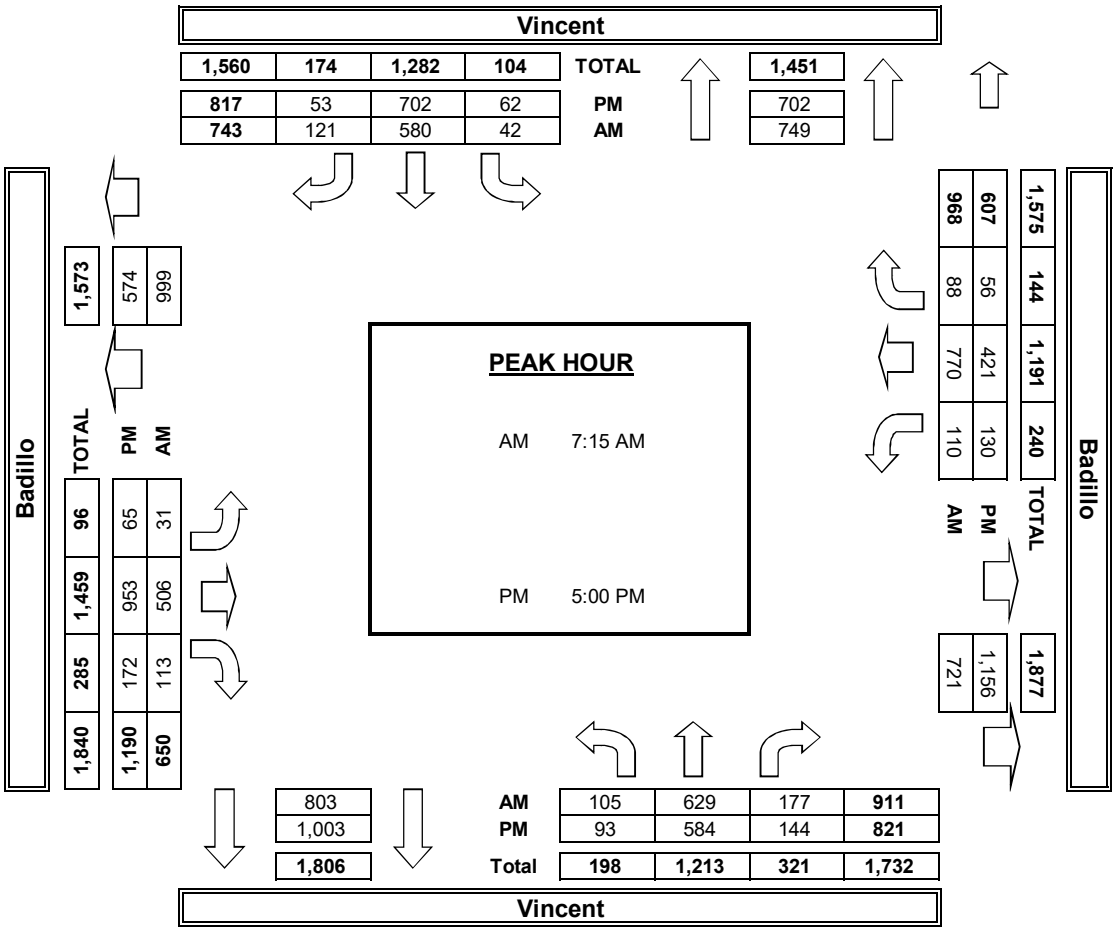

INTERSECTION TURNING MOVEMENT COUNTS

PREPARED BY: AimTD LLC. tel: 714 253 7888 cs@aimtd.com

DATE: Tue, Jun 5, 18

LOCATION: Irwindale
NORTH & SOUTH: Vincent
EAST & WEST: Puente

PROJECT #: SC1780
LOCATION #: 21
CONTROL: SIGNAL

NOTES:

AM / PM / MD / OTHER / OTHER — ▲ N ◄ W E ► S ▼

		NORTHBOUND Vincent			SOUTHBOUND Vincent			EASTBOUND Puente			WESTBOUND Puente				U-TURNS				
	LANES:	NL 1	NT 2	NR 0	SL 1	ST 2	SR 0	EL 0	ET 2	ER 0	WL 0	WT 2	WR 0	TOTAL	NB 0	SB 0	EB 0	WB 0	TTL
AM	7:00 AM	17	94	3	4	111	12	9	24	13	9	112	11	419	0	0	0	0	0
	7:15 AM	15	127	2	13	143	17	11	76	20	15	143	10	592	0	0	0	0	0
	7:30 AM	18	166	6	11	172	17	7	118	20	25	148	24	732	0	0	0	0	0
	7:45 AM	19	242	13	17	185	10	6	84	19	22	139	32	788	0	0	0	0	0
	8:00 AM	15	152	10	16	160	25	18	71	7	12	133	30	649	0	1	0	0	1
	8:15 AM	18	151	7	10	134	11	7	41	13	12	91	19	514	0	0	0	0	0
	8:30 AM	11	129	7	4	141	10	12	27	15	10	60	12	438	0	0	0	0	0
	8:45 AM	18	135	5	4	116	15	12	42	9	10	56	4	426	1	0	0	0	1
	VOLUMES	131	1,196	53	79	1,162	117	82	483	116	115	882	142	4,558	1	1	0	0	2
	APPROACH %	9%	87%	4%	6%	86%	9%	12%	71%	17%	10%	77%	12%						
	APP/DEPART	1,380	/	1,421	1,358	/	1,394	681	/	614	1,139	/	1,129	0					
	BEGIN PEAK HR		7:15 AM																
	VOLUMES	67	687	31	57	660	69	42	349	66	74	563	96	2,761					
	APPROACH %	9%	88%	4%	7%	84%	9%	9%	76%	14%	10%	77%	13%						
	PEAK HR FACTOR		0.716			0.927			0.788			0.930		0.876					
	APP/DEPART	785	/	826	786	/	800	457	/	436	733	/	699	0					
PM	4:00 PM	18	154	19	5	184	14	22	109	14	10	42	10	601	2	0	0	0	2
	4:15 PM	21	178	21	15	182	17	18	105	14	6	54	9	640	2	1	0	0	3
	4:30 PM	14	182	18	6	233	14	20	123	16	9	57	8	700	0	0	0	0	0
	4:45 PM	18	163	17	21	205	7	23	141	17	9	57	13	691	0	0	0	0	0
	5:00 PM	14	184	19	17	202	15	23	140	11	17	66	7	715	0	2	0	0	2
	5:15 PM	18	176	15	21	203	15	18	132	21	10	71	11	711	0	1	0	0	1
	5:30 PM	19	197	21	12	209	13	18	144	15	7	77	10	742	0	0	0	0	0
	5:45 PM	22	170	23	13	218	17	16	124	20	14	51	9	697	2	0	0	0	2
	VOLUMES	144	1,404	153	110	1,636	112	158	1,018	128	82	475	77	5,497	6	4	0	0	10
	APPROACH %	8%	83%	9%	6%	88%	6%	12%	78%	10%	13%	75%	12%						
	APP/DEPART	1,701	/	1,643	1,858	/	1,852	1,304	/	1,277	634	/	725	0					
	BEGIN PEAK HR		5:00 PM																
	VOLUMES	73	727	78	63	832	60	75	540	67	48	265	37	2,865					
	APPROACH %	8%	83%	9%	7%	87%	6%	11%	79%	10%	14%	76%	11%						
	PEAK HR FACTOR		0.926			0.963			0.963			0.931		0.965					
	APP/DEPART	878	/	842	955	/	949	682	/	678	350	/	396	0					

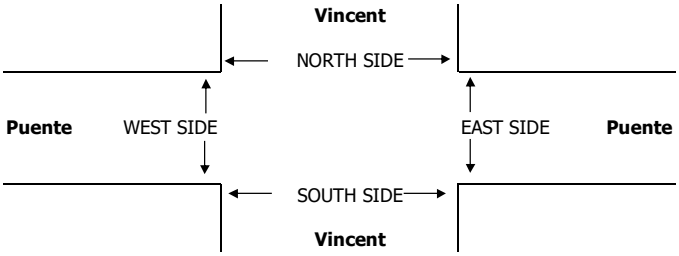

		PEDESTRIAN + BIKE CROSSINGS					PEDESTRIAN CROSSINGS					BICYCLE CROSSINGS				
		N SIDE	S SIDE	E SIDE	W SIDE	TOTAL	N SIDE	S SIDE	E SIDE	W SIDE	TOTAL	NS	SS	ES	WS	TOTAL
AM	7:00 AM	0	0	0	0	0	0	0	0	0	0	0	0	0	0	0
	7:15 AM	0	0	0	0	0	0	0	0	0	0	0	0	0	0	0
	7:30 AM	0	0	0	0	0	0	0	0	0	0	0	0	0	0	0
	7:45 AM	0	0	0	0	0	0	0	0	0	0	0	0	0	0	0
	8:00 AM	0	0	0	0	0	0	0	0	0	0	0	0	0	0	0
	8:15 AM	0	0	0	0	0	0	0	0	0	0	0	0	0	0	0
	8:30 AM	0	0	0	0	0	0	0	0	0	0	0	0	0	0	0
	8:45 AM	0	0	0	0	0	0	0	0	0	0	0	0	0	0	0
	TOTAL	0	0	0	0	0	0	0	0	0	0	0	0	0	0	0
	AM BEGIN PEAK HR	7:15 AM					0	0	0	0	0					
PM	4:00 PM	0	0	0	0	0	0	0	0	0	0	0	0	0	0	0
	4:15 PM	0	0	0	0	0	0	0	0	0	0	0	0	0	0	0
	4:30 PM	0	0	0	0	0	0	0	0	0	0	0	0	0	0	0
	4:45 PM	0	0	0	0	0	0	0	0	0	0	0	0	0	0	0
	5:00 PM	0	0	0	0	0	0	0	0	0	0	0	0	0	0	0
	5:15 PM	0	0	0	0	0	0	0	0	0	0	0	0	0	0	0
	5:30 PM	0	0	0	0	0	0	0	0	0	0	0	0	0	0	0
	5:45 PM	0	0	0	0	0	0	0	0	0	0	0	0	0	0	0
	TOTAL	0	0	0	0	0	0	0	0	0	0	0	0	0	0	0
	PM BEGIN PEAK HR	5:00 PM					0	0	0	0	0					

AimTD LLC

TURNING MOVEMENT COUNTS

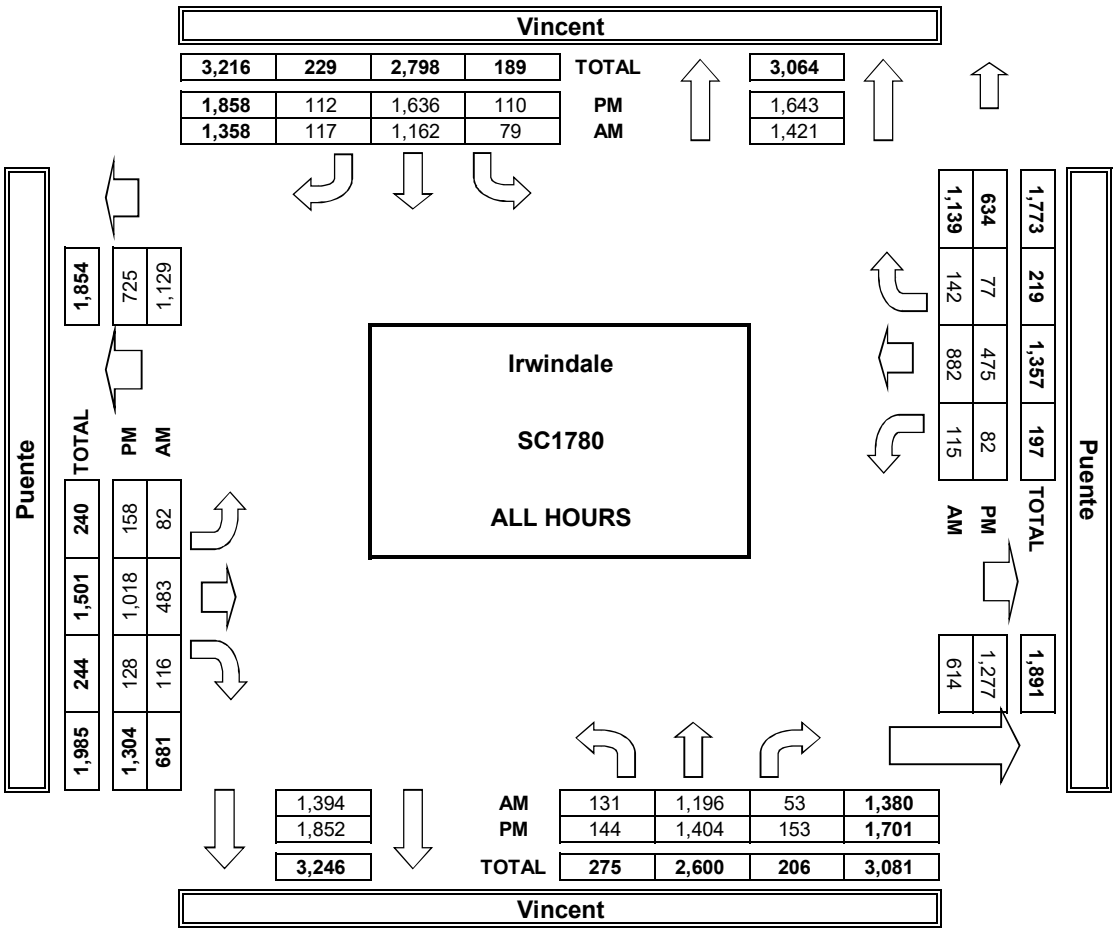

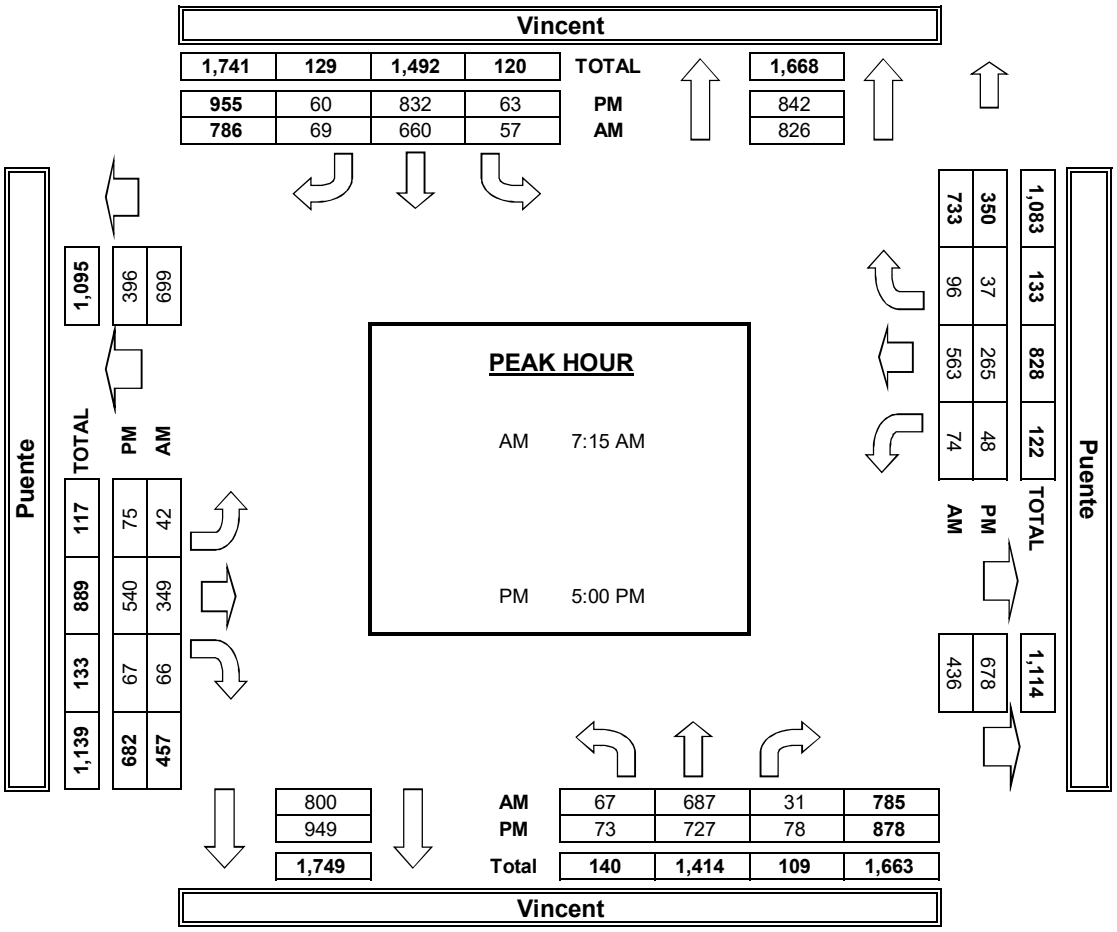

INTERSECTION TURNING MOVEMENT COUNTS

T218

PREPARED BY: AimTD LLC. tel: 714 253 7888 cs@aimtd.com

DATE: Tue, Jun 5, 18

LOCATION: Irwindale
NORTH & SOUTH: Vincent
EAST & WEST: Rowland

PROJECT #: SC1780
LOCATION #: 22
CONTROL: SIGNAL

NOTES:

AM / PM / MD / OTHER / OTHER — ▲ N ◄ W E ► S ▼

		NORTHBOUND Vincent			SOUTHBOUND Vincent			EASTBOUND Rowland			WESTBOUND Rowland				U-TURNS				
	LANES:	NL 1	NT 2	NR 0	SL 1	ST 2	SR 0	EL 0	ET 1	ER 0	WL 0	WT 1	WR 0	TOTAL	NB 0	SB 0	EB 0	WB 0	TTL
AM	7:00 AM	9	107	3	1	131	0	1	14	9	34	27	8	344	0	0	0	0	0
	7:15 AM	9	117	7	7	168	3	3	30	12	28	42	13	439	3	1	0	0	4
	7:30 AM	7	166	19	14	199	3	6	42	10	39	36	13	554	2	0	0	0	2
	7:45 AM	11	229	15	10	225	3	16	42	7	33	34	23	648	1	0	0	0	1
	8:00 AM	4	150	11	8	179	1	5	27	15	23	26	15	464	2	1	0	0	3
	8:15 AM	12	167	10	4	153	5	5	22	9	24	35	11	457	4	1	0	0	5
	8:30 AM	9	131	10	5	150	6	2	16	7	13	17	13	379	3	1	0	0	4
	8:45 AM	4	154	14	7	127	3	2	23	7	22	23	5	391	0	0	0	0	0
	VOLUMES	65	1,221	89	56	1,332	24	40	216	76	216	240	101	3,676	15	4	0	0	19
	APPROACH %	5%	89%	6%	4%	94%	2%	12%	65%	23%	39%	43%	18%						
	APP/DEPART	1,375	/	1,366	1,412	/	1,639	332	/	357	557	/	314	0					
	BEGIN PEAK HR		7:30 AM																
	VOLUMES	34	712	55	36	756	12	32	133	41	119	131	62	2,123					
	APPROACH %	4%	89%	7%	4%	94%	1%	16%	65%	20%	38%	42%	20%						
	PEAK HR FACTOR		0.785			0.845			0.792			0.867		0.819					
	APP/DEPART	801	/	808	804	/	925	206	/	222	312	/	168	0					
PM	4:00 PM	11	171	28	19	181	7	3	44	16	15	19	6	520	0	0	0	0	0
	4:15 PM	11	203	18	28	167	9	4	44	17	18	22	13	554	1	0	0	0	1
	4:30 PM	11	211	22	18	220	6	2	51	6	24	25	9	605	2	0	0	0	2
	4:45 PM	6	189	26	27	202	7	2	51	8	15	24	7	564	0	0	0	0	0
	5:00 PM	6	214	31	24	203	5	5	51	14	20	22	7	602	0	0	0	0	0
	5:15 PM	8	195	27	23	198	3	2	56	10	14	19	7	562	2	1	0	0	3
	5:30 PM	8	232	21	20	204	7	4	47	15	21	33	12	624	0	0	0	0	0
	5:45 PM	11	199	34	31	244	3	3	52	10	14	19	5	625	1	0	0	0	1
	VOLUMES	72	1,614	207	190	1,619	47	25	396	96	141	183	66	4,656	6	1	0	0	7
	APPROACH %	4%	85%	11%	10%	87%	3%	5%	77%	19%	36%	47%	17%						
	APP/DEPART	1,893	/	1,706	1,856	/	1,862	517	/	792	390	/	296	0					
	BEGIN PEAK HR		5:00 PM																
	VOLUMES	33	840	113	98	849	18	14	206	49	69	93	31	2,413					
	APPROACH %	3%	85%	11%	10%	88%	2%	5%	77%	18%	36%	48%	16%						
	PEAK HR FACTOR		0.944			0.868			0.961			0.731		0.965					
	APP/DEPART	986	/	886	965	/	970	269	/	416	193	/	141	0					

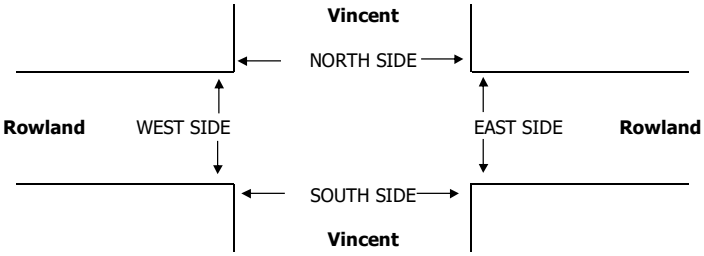

		PEDESTRIAN + BIKE CROSSINGS					PEDESTRIAN CROSSINGS					BICYCLE CROSSINGS				
		N SIDE	S SIDE	E SIDE	W SIDE	TOTAL	N SIDE	S SIDE	E SIDE	W SIDE	TOTAL	NS	SS	ES	WS	TOTAL
AM	7:00 AM	0	0	0	0	0	0	0	0	0	0	0	0	0	0	0
	7:15 AM	0	0	0	0	0	0	0	0	0	0	0	0	0	0	0
	7:30 AM	0	0	0	0	0	0	0	0	0	0	0	0	0	0	0
	7:45 AM	0	0	0	0	0	0	0	0	0	0	0	0	0	0	0
	8:00 AM	0	0	0	0	0	0	0	0	0	0	0	0	0	0	0
	8:15 AM	0	0	0	0	0	0	0	0	0	0	0	0	0	0	0
	8:30 AM	0	0	0	0	0	0	0	0	0	0	0	0	0	0	0
	8:45 AM	0	0	0	0	0	0	0	0	0	0	0	0	0	0	0
	TOTAL	0	0	0	0	0	0	0	0	0	0	0	0	0	0	0
	AM BEGIN PEAK HR	7:30 AM					0	0	0	0	0					
PM	4:00 PM	0	0	0	0	0	0	0	0	0	0	0	0	0	0	0
	4:15 PM	0	0	0	0	0	0	0	0	0	0	0	0	0	0	0
	4:30 PM	0	0	0	0	0	0	0	0	0	0	0	0	0	0	0
	4:45 PM	0	0	0	0	0	0	0	0	0	0	0	0	0	0	0
	5:00 PM	0	0	0	0	0	0	0	0	0	0	0	0	0	0	0
	5:15 PM	0	0	0	0	0	0	0	0	0	0	0	0	0	0	0
	5:30 PM	0	0	0	0	0	0	0	0	0	0	0	0	0	0	0
	5:45 PM	0	0	0	0	0	0	0	0	0	0	0	0	0	0	0
	TOTAL	0	0	0	0	0	0	0	0	0	0	0	0	0	0	0
	PM BEGIN PEAK HR	5:00 PM					0	0	0	0	0					

AimTD LLC

TURNING MOVEMENT COUNTS

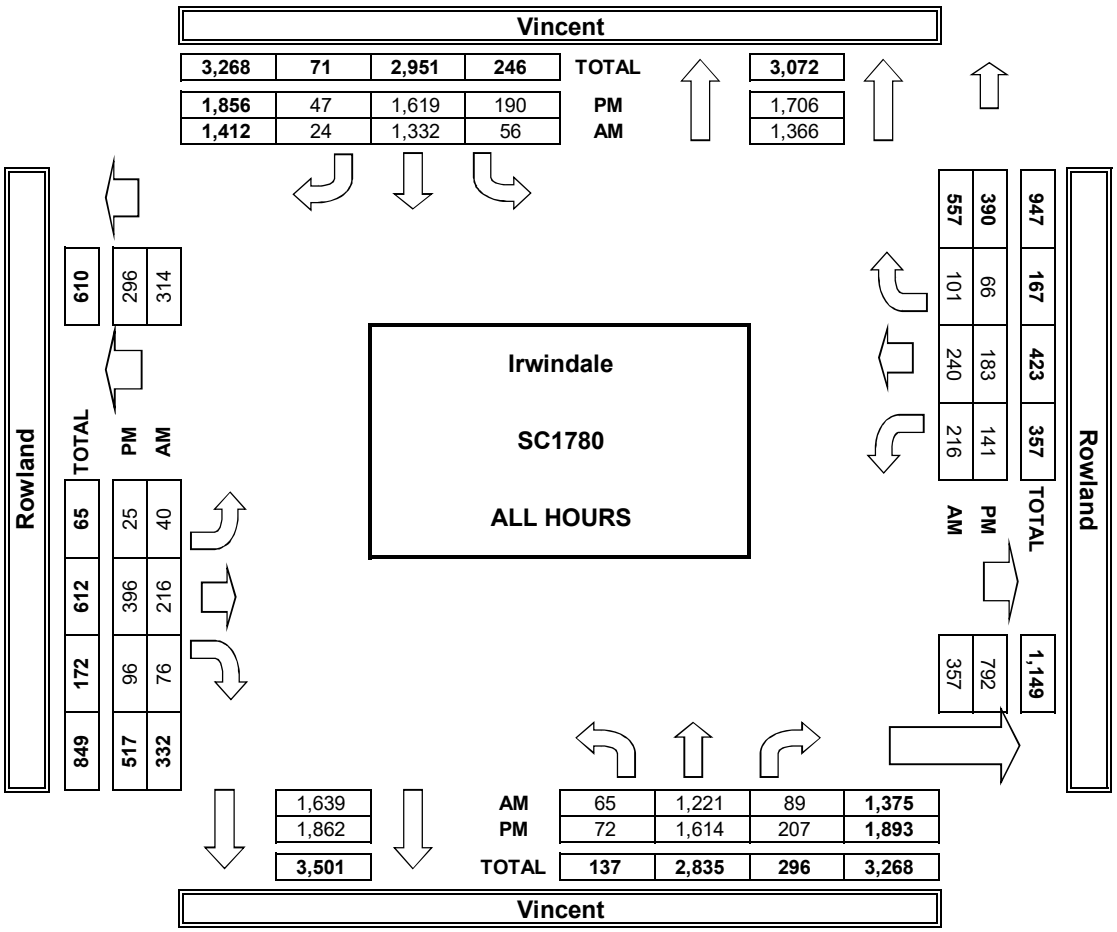

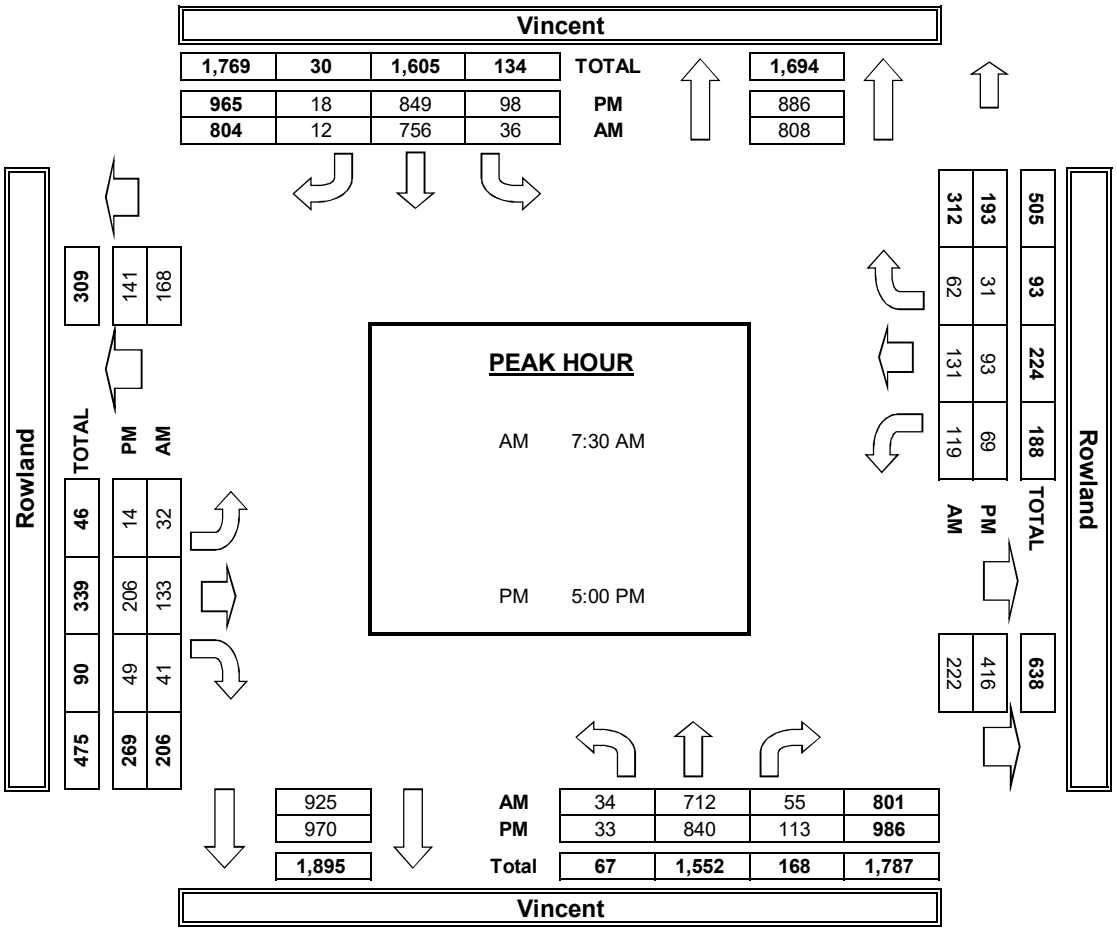

INTERSECTION TURNING MOVEMENT COUNTS

PREPARED BY: AimTD LLC. tel: 714 253 7888 cs@aimtd.com

DATE: Tue, Jun 5, 18

LOCATION: Irwindale
NORTH & SOUTH: Vincent
EAST & WEST: Workman

PROJECT #: SC1780
LOCATION #: 23
CONTROL: SIGNAL

NOTES:

AM / PM / MD / OTHER / OTHER — ▲ N ◄ W E ► S ▼

		NORTHBOUND Vincent			SOUTHBOUND Vincent			EASTBOUND Workman			WESTBOUND Workman			
	LANES:	NL 1	NT 2	NR 0	SL 1	ST 2	SR 0	EL 0	ET 1	ER 0	WL 0	WT 1	WR 0	TOTAL
AM	7:00 AM	10	112	13	2	174	3	2	10	15	41	27	12	421
	7:15 AM	11	120	18	4	190	13	3	26	10	37	47	11	490
	7:30 AM	16	188	30	11	234	15	3	44	10	46	41	17	655
	7:45 AM	15	191	33	16	238	12	7	40	11	29	48	20	660
	8:00 AM	22	151	23	8	190	14	5	31	18	37	48	19	566
	8:15 AM	14	145	24	7	154	20	6	22	10	19	51	18	490
	8:30 AM	30	119	8	11	147	18	14	25	12	25	43	9	461
	8:45 AM	15	158	23	4	131	30	3	18	11	30	22	6	451
	VOLUMES	133	1,184	172	63	1,458	125	43	216	97	264	327	112	4,194
	APPROACH %	9%	80%	12%	4%	89%	8%	12%	61%	27%	38%	47%	16%	
	APP/DEPART	1,489	/	1,340	1,646	/	1,853	356	/	450	703	/	551	0
	BEGIN PEAK HR		7:30 AM											
	VOLUMES	67	675	110	42	816	61	21	137	49	131	188	74	2,371
	APPROACH %	8%	79%	13%	5%	89%	7%	10%	66%	24%	33%	48%	19%	
	PEAK HR FACTOR		0.891			0.864			0.892			0.945		0.898
	APP/DEPART	852	/	770	919	/	1,011	207	/	289	393	/	301	0
PM	4:00 PM	27	190	34	15	186	5	7	59	16	18	30	14	601
	4:15 PM	23	235	42	14	168	9	6	50	15	27	26	12	627
	4:30 PM	22	210	45	20	223	6	8	28	7	32	37	6	644
	4:45 PM	24	238	55	17	212	4	9	56	11	27	36	14	703
	5:00 PM	21	199	40	11	218	5	3	56	27	23	33	13	649
	5:15 PM	21	243	47	21	192	10	5	74	14	19	43	17	706
	5:30 PM	24	245	43	25	218	8	5	65	8	32	34	9	716
	5:45 PM	25	260	68	24	228	1	4	62	15	34	33	8	762
	VOLUMES	187	1,820	374	147	1,645	48	47	450	113	212	272	93	5,408
	APPROACH %	8%	76%	16%	8%	89%	3%	8%	74%	19%	37%	47%	16%	
	APP/DEPART	2,381	/	1,964	1,840	/	2,016	610	/	967	577	/	461	0
	BEGIN PEAK HR		5:00 PM											
	VOLUMES	91	947	198	81	856	24	17	257	64	108	143	47	2,833
	APPROACH %	7%	77%	16%	8%	89%	2%	5%	76%	19%	36%	48%	16%	
	PEAK HR FACTOR		0.875			0.950			0.909			0.943		0.929
	APP/DEPART	1,236	/	1,015	961	/	1,048	338	/	532	298	/	238	0

U-TURNS

	NB	SB	EB	WB	TTL
AM 7:00 AM	7	0	0	0	7
7:15 AM	3	0	0	0	3
7:30 AM	3	0	0	0	3
7:45 AM	3	0	0	0	3
8:00 AM	6	0	0	0	6
8:15 AM	3	0	0	0	3
8:30 AM	6	1	0	0	7
8:45 AM	3	0	0	0	3
VOLUMES	34	1	0	0	35
PM 4:00 PM	12	0	0	0	12
4:15 PM	5	0	0	0	5
4:30 PM	4	0	0	0	4
4:45 PM	5	0	0	0	5
5:00 PM	2	1	0	0	3
5:15 PM	3	2	0	0	5
5:30 PM	5	1	0	0	6
5:45 PM	10	0	0	0	10
VOLUMES	46	4	0	0	50

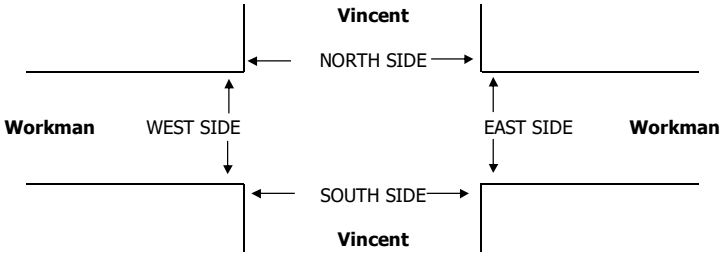

PEDESTRIAN + BIKE CROSSINGS

	N SIDE	S SIDE	E SIDE	W SIDE	TOTAL
AM 7:00 AM	0	0	0	0	0
7:15 AM	0	0	0	0	0
7:30 AM	0	0	0	0	0
7:45 AM	0	0	0	0	0
8:00 AM	0	0	0	0	0
8:15 AM	0	0	0	0	0
8:30 AM	0	0	0	0	0
8:45 AM	0	0	0	0	0
TOTAL	0	0	0	0	0
AM BEGIN PEAK HR	7:30 AM				
PM 4:00 PM	0	0	0	0	0
4:15 PM	0	0	0	0	0
4:30 PM	0	0	0	0	0
4:45 PM	0	0	0	0	0
5:00 PM	0	0	0	0	0
5:15 PM	0	0	0	0	0
5:30 PM	0	0	0	0	0
5:45 PM	0	0	0	0	0
TOTAL	0	0	0	0	0
PM BEGIN PEAK HR	5:00 PM				

PEDESTRIAN CROSSINGS

	N SIDE	S SIDE	E SIDE	W SIDE	TOTAL
AM 7:00 AM	0	0	0	0	0
7:15 AM	0	0	0	0	0
7:30 AM	0	0	0	0	0
7:45 AM	0	0	0	0	0
8:00 AM	0	0	0	0	0
8:15 AM	0	0	0	0	0
8:30 AM	0	0	0	0	0
8:45 AM	0	0	0	0	0
TOTAL	0	0	0	0	0
AM BEGIN PEAK HR	0	0	0	0	0
PM 4:00 PM	0	0	0	0	0
4:15 PM	0	0	0	0	0
4:30 PM	0	0	0	0	0
4:45 PM	0	0	0	0	0
5:00 PM	0	0	0	0	0
5:15 PM	0	0	0	0	0
5:30 PM	0	0	0	0	0
5:45 PM	0	0	0	0	0
TOTAL	0	0	0	0	0
PM BEGIN PEAK HR	0	0	0	0	0

BICYCLE CROSSINGS

	NS	SS	ES	WS	TOTAL
AM 7:00 AM	0	0	0	0	0
7:15 AM	0	0	0	0	0
7:30 AM	0	0	0	0	0
7:45 AM	0	0	0	0	0
8:00 AM	0	0	0	0	0
8:15 AM	0	0	0	0	0
8:30 AM	0	0	0	0	0
8:45 AM	0	0	0	0	0
TOTAL	0	0	0	0	0
PM 4:00 PM	0	0	0	0	0
4:15 PM	0	0	0	0	0
4:30 PM	0	0	0	0	0
4:45 PM	0	0	0	0	0
5:00 PM	0	0	0	0	0
5:15 PM	0	0	0	0	0
5:30 PM	0	0	0	0	0
5:45 PM	0	0	0	0	0
TOTAL	0	0	0	0	0

AimTD LLC

TURNING MOVEMENT COUNTS

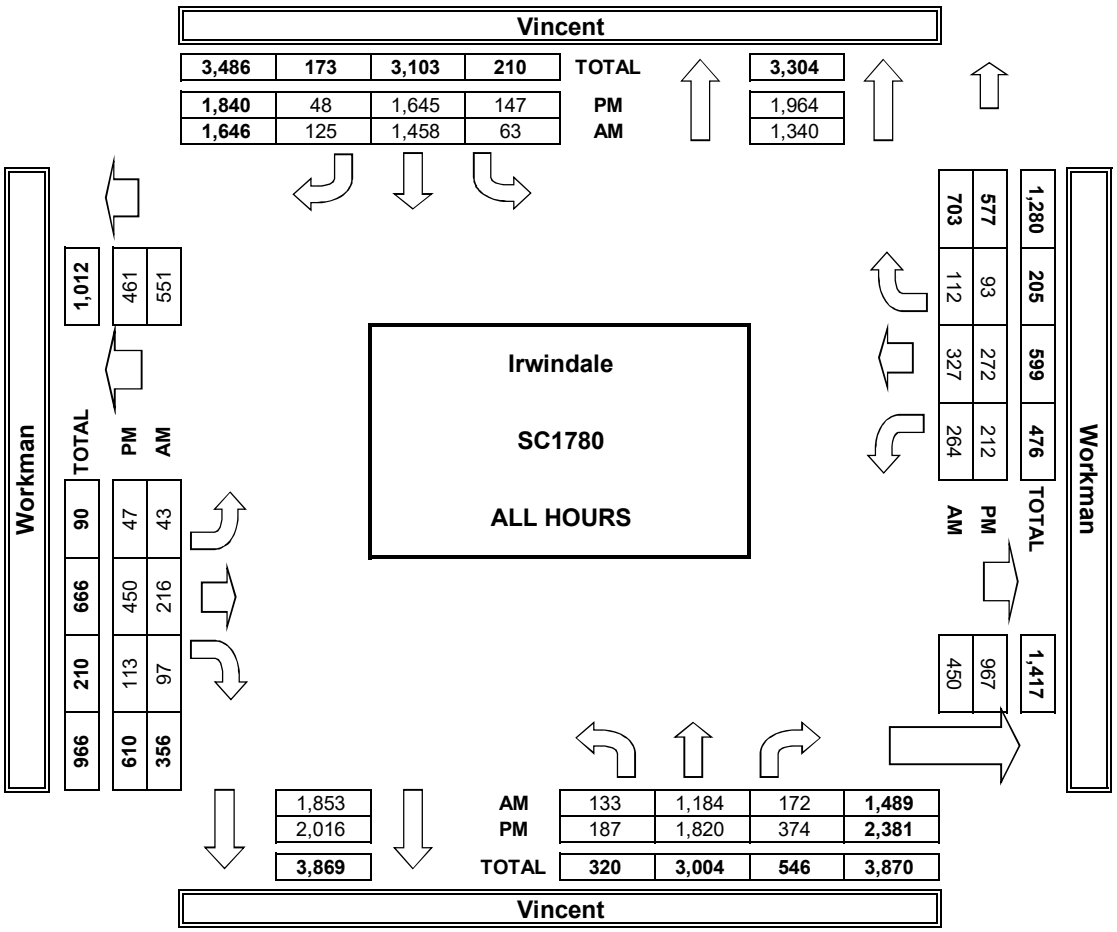

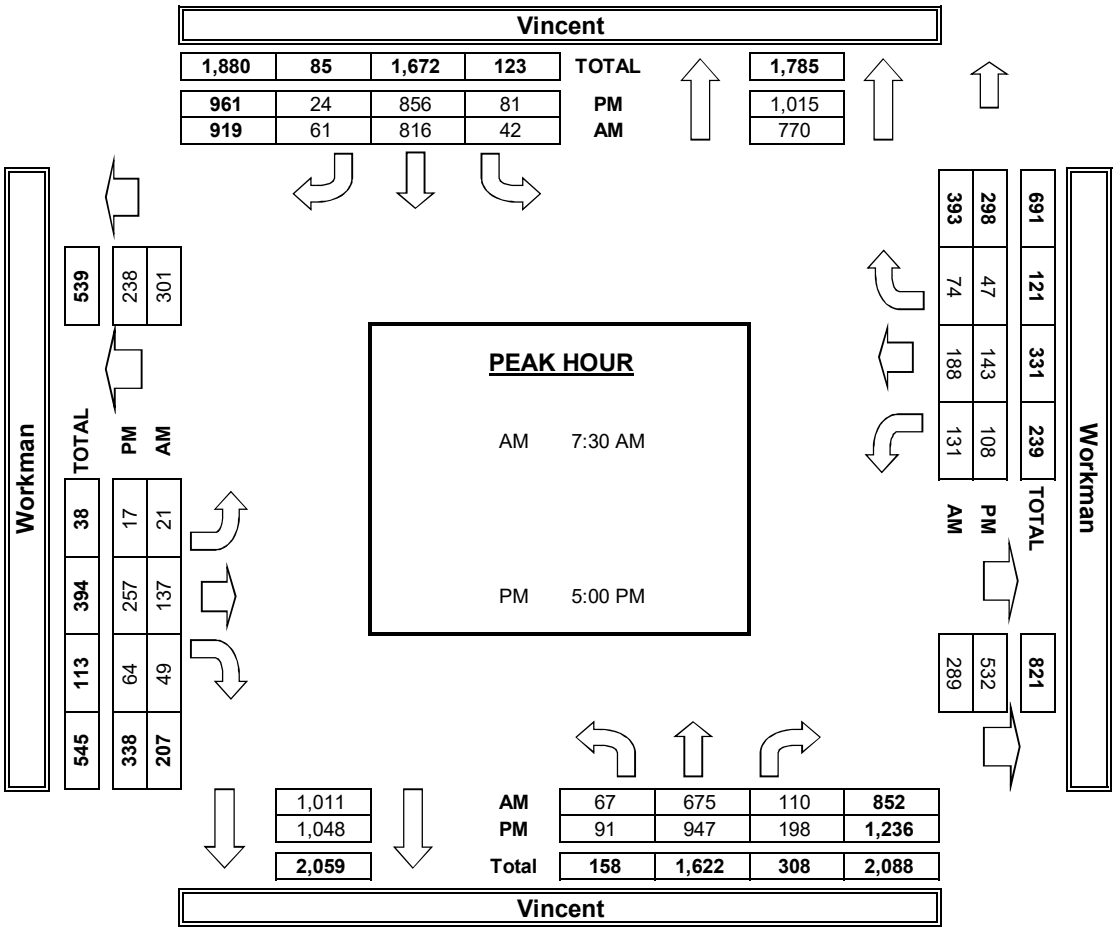

INTERSECTION TURNING MOVEMENT COUNTS

T218

PREPARED BY: AimTD LLC. tel: 714 253 7888 cs@aimtd.com

DATE:	LOCATION:	Irwindale	PROJECT #:	SC1780
Tue, Jun 5, 18	NORTH & SOUTH:	Vincent	LOCATION #:	24
	EAST & WEST:	I-10 WB Ramps	CONTROL:	SIGNAL

NOTES:

AM / PM / MD / OTHER / OTHER — ▲ N, ◄ W, E ►, S ▼

		NORTHBOUND Vincent			SOUTHBOUND Vincent			EASTBOUND I-10 WB Ramps			WESTBOUND I-10 WB Ramps			
	LANES:	NL X	NT 3	NR X	SL X	ST 3	SR X	EL X	ET X	ER X	WL 2	WT X	WR 1	TOTAL
AM	7:00 AM	0	128	0	0	186	0	0	0	0	67	0	16	397
	7:15 AM	0	150	0	0	190	0	0	0	0	97	0	41	478
	7:30 AM	0	213	0	0	276	0	0	0	0	88	0	49	626
	7:45 AM	0	215	0	0	302	0	0	0	0	90	0	51	658
	8:00 AM	0	163	0	0	243	0	0	0	0	118	0	53	577
	8:15 AM	0	150	0	0	189	0	0	0	0	83	0	55	477
	8:30 AM	0	119	0	0	165	0	0	0	0	121	0	67	472
	8:45 AM	0	157	0	0	193	0	0	0	0	98	0	79	527
	VOLUMES	0	1,295	0	0	1,744	0	0	0	0	762	0	411	4,212
	APPROACH %	0%	100%	0%	0%	100%	0%	0%	0%	0%	65%	0%	35%	
	APP/DEPART	1,295	/	1,706	1,744	/	2,506	0	/	0	1,173	/	0	0
	BEGIN PEAK HR		7:15 AM											
	VOLUMES	0	741	0	0	1,011	0	0	0	0	393	0	194	2,339
	APPROACH %	0%	100%	0%	0%	100%	0%	0%	0%	0%	67%	0%	33%	
	PEAK HR FACTOR		0.862			0.837			0.000			0.858		0.889
	APP/DEPART	741	/	935	1,011	/	1,404	0	/	0	587	/	0	0
PM	4:00 PM	0	198	0	0	232	0	0	0	0	117	0	71	618
	4:15 PM	0	232	0	0	257	0	0	0	0	166	0	80	735
	4:30 PM	0	228	0	0	242	0	0	0	0	175	0	70	715
	4:45 PM	0	261	0	0	278	0	0	0	0	148	0	75	762
	5:00 PM	0	244	0	0	290	0	0	0	0	166	0	58	758
	5:15 PM	0	256	0	0	264	0	0	0	0	159	0	69	748
	5:30 PM	0	299	0	0	243	0	0	0	0	177	0	59	778
	5:45 PM	0	263	0	0	255	0	0	0	0	159	0	84	761
	VOLUMES	0	1,981	0	0	2,061	0	0	0	0	1,267	0	566	5,875
	APPROACH %	0%	100%	0%	0%	100%	0%	0%	0%	0%	69%	0%	31%	
	APP/DEPART	1,981	/	2,547	2,061	/	3,328	0	/	0	1,833	/	0	0
	BEGIN PEAK HR		4:45 PM											
	VOLUMES	0	1,060	0	0	1,075	0	0	0	0	650	0	261	3,046
	APPROACH %	0%	100%	0%	0%	100%	0%	0%	0%	0%	71%	0%	29%	
	PEAK HR FACTOR		0.886			0.927			0.000			0.965		0.979
	APP/DEPART	1,060	/	1,321	1,075	/	1,725	0	/	0	911	/	0	0

U-TURNS

NB	SB	EB	WB	TTL
0	0	0	0	
0	0	0	0	0
0	0	0	0	0
0	0	0	0	0
0	0	0	0	0
0	0	0	0	0
0	0	0	0	0
0	0	0	0	0
0	0	0	0	0
0	0	0	0	0
0	0	0	0	0
0	0	0	0	0
0	0	0	0	0
0	0	0	0	0
0	0	0	0	0
0	0	0	0	0
0	0	0	0	0
0	0	0	0	0
0	0	0	0	0
0	0	0	0	0

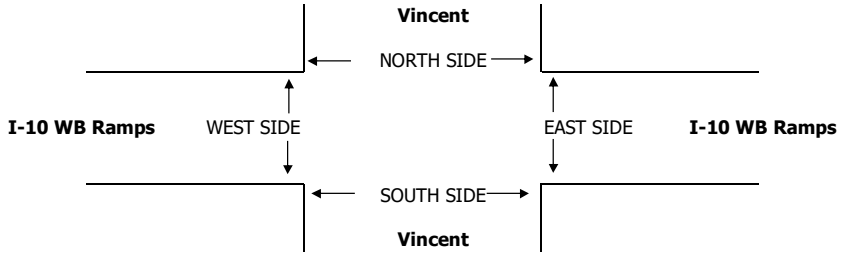

		PEDESTRIAN + BIKE CROSSINGS					PEDESTRIAN CROSSINGS					BICYCLE CROSSINGS				
		N SIDE	S SIDE	E SIDE	W SIDE	TOTAL	N SIDE	S SIDE	E SIDE	W SIDE	TOTAL	NS	SS	ES	WS	TOTAL
AM	7:00 AM	0	0	0	0	0	0	0	0	0	0	0	0	0	0	0
	7:15 AM	0	0	2	0	2	0	0	2	0	2	0	0	0	0	0
	7:30 AM	1	0	3	3	7	1	0	3	3	7	0	0	0	0	0
	7:45 AM	0	0	3	3	6	0	0	2	3	5	0	0	1	0	1
	8:00 AM	0	0	2	0	2	0	0	2	0	2	0	0	0	0	0
	8:15 AM	0	0	3	0	3	0	0	2	0	2	0	0	1	0	1
	8:30 AM	0	0	0	0	0	0	0	0	0	0	0	0	0	0	0
	8:45 AM	0	0	4	0	4	0	0	3	0	3	0	0	1	0	1
	TOTAL	1	0	17	6	24	1	0	14	6	21	0	0	3	0	3
	AM BEGIN PEAK HR			7:15 AM			1	0	9	6	16					
PM	4:00 PM	0	0	1	0	1	0	0	1	0	1	0	0	0	0	0
	4:15 PM	0	0	2	0	2	0	0	2	0	2	0	0	0	0	0
	4:30 PM	0	0	1	0	1	0	0	1	0	1	0	0	0	0	0
	4:45 PM	0	0	2	2	4	0	0	1	2	3	0	0	1	0	1
	5:00 PM	0	0	4	1	5	0	0	3	0	3	0	0	1	1	2
	5:15 PM	0	0	2	0	2	0	0	2	0	2	0	0	0	0	0
	5:30 PM	0	0	0	0	0	0	0	0	0	0	0	0	0	0	0
	5:45 PM	0	0	1	0	1	0	0	1	0	1	0	0	0	0	0
	TOTAL	0	0	13	3	16	0	0	11	2	13	0	0	2	1	3
	PM BEGIN PEAK HR			4:45 PM			0	0	6	2	8					

AimTD LLC

TURNING MOVEMENT COUNTS

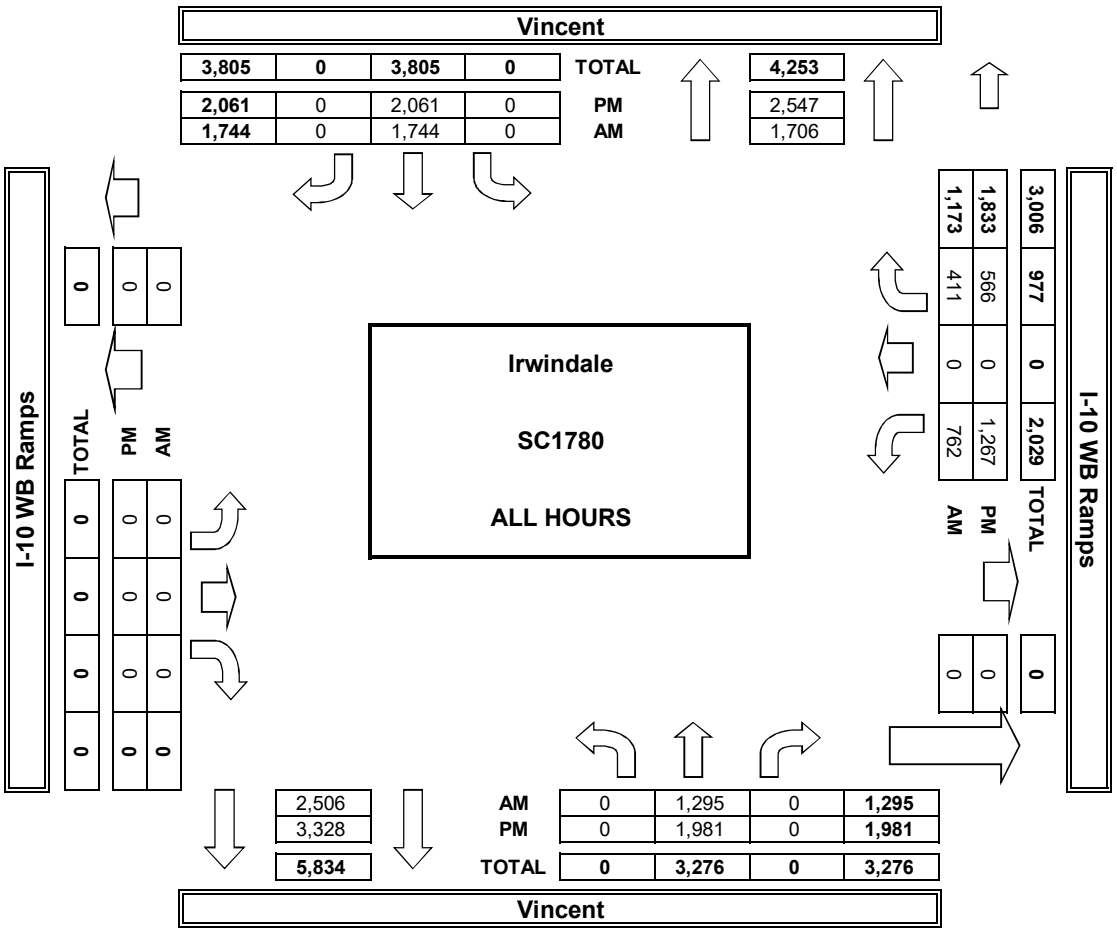

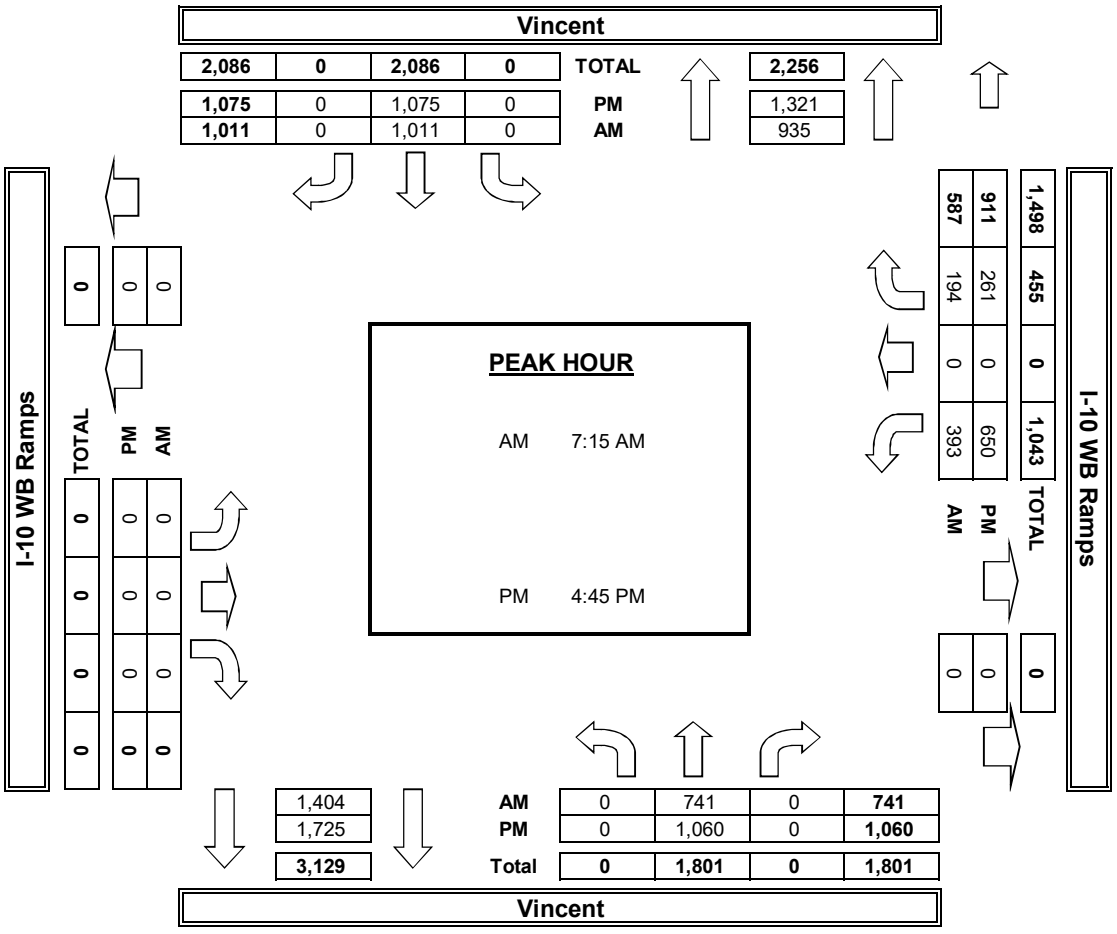

INTERSECTION TURNING MOVEMENT COUNTS

PREPARED BY: AimTD LLC. tel: 714 253 7888 cs@aimtd.com

DATE:					
Tue, Jun 5, 18	LOCATION:	Irwindale	PROJECT #:	SC1780
	NORTH & SOUTH:	Vincent	LOCATION #:	25
	EAST & WEST:	I-10 EB Ramps	CONTROL:	SIGNAL

NOTES:

AM / PM / MD / OTHER / OTHER — ◄ W — ▲ N — S ▼ — E ►

		NORTHBOUND Vincent			SOUTHBOUND Vincent			EASTBOUND I-10 EB Ramps			WESTBOUND I-10 EB Ramps				U-TURNS				
	LANES:	NL X	NT 2.5	NR 1.5	SL X	ST 2.5	SR 1.5	EL 1	ET 0	ER 2	WL X	WT X	WR X	TOTAL	NB 0	SB 0	EB 0	WB 0	TTL
AM	7:00 AM	0	90	126	0	170	82	38	0	57	0	0	0	563	0	0	0	0	0
	7:15 AM	0	99	165	0	218	69	51	0	62	0	0	0	664	0	0	0	0	0
	7:30 AM	0	147	186	0	259	105	68	0	62	0	0	0	827	0	0	0	0	0
	7:45 AM	0	159	170	0	297	94	57	0	58	0	0	0	835	0	0	0	0	0
	8:00 AM	0	122	135	0	271	90	41	0	61	0	0	0	720	0	0	0	0	0
	8:15 AM	0	110	149	0	215	57	40	1	64	0	0	0	636	0	0	0	0	0
	8:30 AM	0	81	116	0	218	66	38	1	52	0	0	0	572	0	0	0	0	0
	8:45 AM	0	124	102	0	229	62	35	0	57	0	0	0	609	0	0	0	0	0
	VOLUMES	0	932	1,149	0	1,877	625	368	2	473	0	0	0	5,426	0	0	0	0	0
	APPROACH %	0%	45%	55%	0%	75%	25%	44%	0%	56%	0%	0%	0%						
	APP/DEPART	2,081	/	1,300	2,502	/	2,350	843	/	1,151	0	/	625	0					
	BEGIN PEAK HR		7:15 AM																
	VOLUMES	0	527	656	0	1,045	358	217	0	243	0	0	0	3,046					
	APPROACH %	0%	45%	55%	0%	74%	26%	47%	0%	53%	0%	0%	0%						
	PEAK HR FACTOR		0.888			0.897			0.885			0.000		0.912					
	APP/DEPART	1,183	/	744	1,403	/	1,288	460	/	656	0	/	358	0					
PM	4:00 PM	0	165	165	0	261	87	33	1	34	0	0	0	746	0	0	0	0	0
	4:15 PM	0	198	182	0	330	93	35	0	25	0	0	0	863	0	0	0	0	0
	4:30 PM	0	186	185	0	326	89	44	0	30	0	0	0	860	0	0	0	0	0
	4:45 PM	0	222	156	0	351	75	39	0	32	0	0	0	875	0	0	0	0	0
	5:00 PM	0	212	188	0	336	119	32	0	36	0	0	0	923	0	0	0	0	0
	5:15 PM	0	221	180	0	339	84	35	0	33	0	0	0	892	0	0	0	0	0
	5:30 PM	0	248	187	0	355	62	54	0	28	0	0	0	934	0	0	0	0	0
	5:45 PM	0	210	156	0	328	86	53	0	35	0	0	0	868	0	0	0	0	0
	VOLUMES	0	1,662	1,399	0	2,626	695	325	1	253	0	0	0	6,961	0	0	0	0	0
	APPROACH %	0%	54%	46%	0%	79%	21%	56%	0%	44%	0%	0%	0%						
	APP/DEPART	3,061	/	1,987	3,321	/	2,879	579	/	1,400	0	/	695	0					
	BEGIN PEAK HR		4:45 PM																
	VOLUMES	0	903	711	0	1,381	340	160	0	129	0	0	0	3,624					
	APPROACH %	0%	56%	44%	0%	80%	20%	55%	0%	45%	0%	0%	0%						
	PEAK HR FACTOR		0.928			0.946			0.881			0.000		0.970					
	APP/DEPART	1,614	/	1,063	1,721	/	1,510	289	/	711	0	/	340	0					

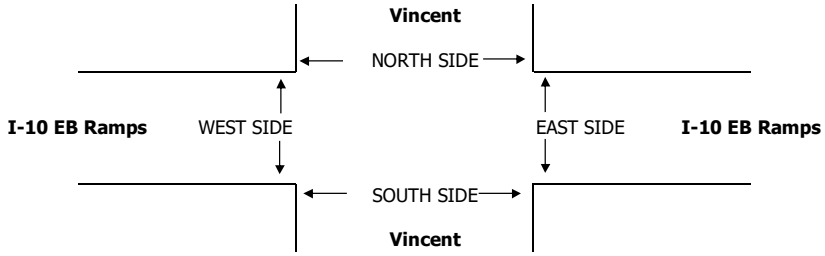

		PEDESTRIAN + BIKE CROSSINGS					PEDESTRIAN CROSSINGS					BICYCLE CROSSINGS				
		N SIDE	S SIDE	E SIDE	W SIDE	TOTAL	N SIDE	S SIDE	E SIDE	W SIDE	TOTAL	NS	SS	ES	WS	TOTAL
AM	7:00 AM	0	0	0	0	0	0	0	0	0	0	0	0	0	0	0
	7:15 AM	0	0	0	0	0	0	0	0	0	0	0	0	0	0	0
	7:30 AM	0	0	0	0	0	0	0	0	0	0	0	0	0	0	0
	7:45 AM	0	0	0	0	0	0	0	0	0	0	0	0	0	0	0
	8:00 AM	0	0	0	0	0	0	0	0	0	0	0	0	0	0	0
	8:15 AM	0	0	0	0	0	0	0	0	0	0	0	0	0	0	0
	8:30 AM	0	0	0	0	0	0	0	0	0	0	0	0	0	0	0
	8:45 AM	0	0	0	0	0	0	0	0	0	0	0	0	0	0	0
	TOTAL	0	0	0	0	0	0	0	0	0	0	0	0	0	0	0
	AM BEGIN PEAK HR	7:15 AM					0	0	0	0	0					
PM	4:00 PM	0	0	0	0	0	0	0	0	0	0	0	0	0	0	0
	4:15 PM	0	0	0	0	0	0	0	0	0	0	0	0	0	0	0
	4:30 PM	0	0	0	0	0	0	0	0	0	0	0	0	0	0	0
	4:45 PM	0	0	0	0	0	0	0	0	0	0	0	0	0	0	0
	5:00 PM	0	0	0	0	0	0	0	0	0	0	0	0	0	0	0
	5:15 PM	0	0	0	0	0	0	0	0	0	0	0	0	0	0	0
	5:30 PM	0	0	0	0	0	0	0	0	0	0	0	0	0	0	0
	5:45 PM	0	0	0	0	0	0	0	0	0	0	0	0	0	0	0
	TOTAL	0	0	0	0	0	0	0	0	0	0	0	0	0	0	0
	PM BEGIN PEAK HR	4:45 PM					0	0	0	0	0					

AimTD LLC

TURNING MOVEMENT COUNTS

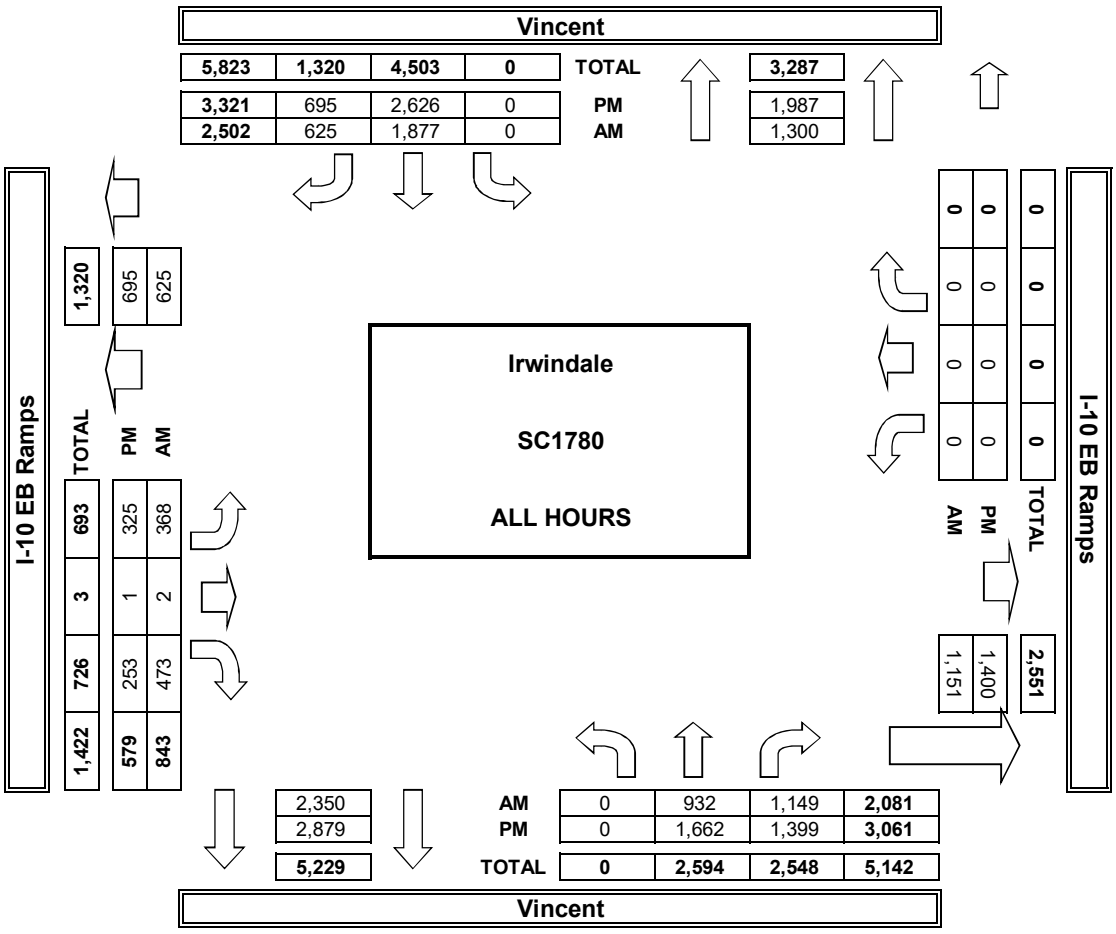

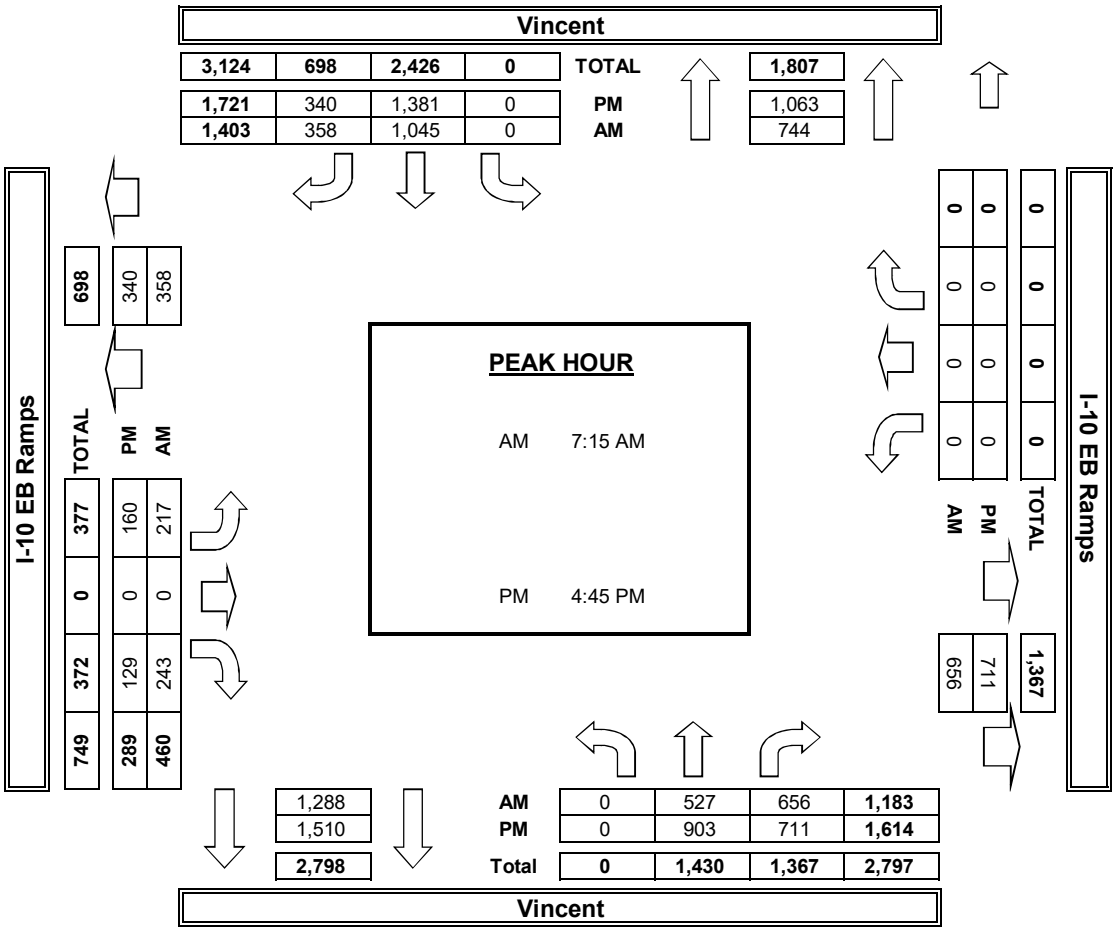

INTERSECTION TURNING MOVEMENT COUNTS

PREPARED BY: AimTD LLC. tel: 714 253 7888 cs@aimtd.com

DATE: Tue, Jun 5, 18

LOCATION: Irwindale
NORTH & SOUTH: Vernon
EAST & WEST: Gladstone

PROJECT #: SC1780
LOCATION #: 26
CONTROL: SIGNAL

NOTES:

AM / PM / MD / OTHER / OTHER — ▲ N ◄ W E ► S ▼

		NORTHBOUND Vernon			SOUTHBOUND Vernon			EASTBOUND Gladstone			WESTBOUND Gladstone				U-TURNS				
	LANES:	NL 1	NT 1	NR 1	SL 1	ST 2	SR 0	EL 1	ET 2	ER 0	WL 1	WT 2	WR 0	TOTAL	NB 0	SB 0	EB 0	WB 0	TTL
AM	7:00 AM	19	74	19	4	48	17	20	41	8	20	243	16	529	0	0	0	1	1
AM	7:15 AM	22	95	19	7	89	23	11	31	1	26	268	14	606	0	0	0	0	0
AM	7:30 AM	16	114	40	6	122	24	14	57	11	45	191	9	649	0	0	0	0	0
AM	7:45 AM	25	122	80	4	127	26	10	56	10	43	202	8	713	0	0	0	0	0
AM	8:00 AM	13	92	39	6	88	15	16	54	10	36	164	8	541	0	0	0	0	0
AM	8:15 AM	13	92	28	5	64	25	11	49	13	12	115	5	432	0	0	0	0	0
AM	8:30 AM	12	90	19	2	44	18	15	34	11	24	107	3	379	0	0	0	0	0
AM	8:45 AM	9	76	23	6	62	20	18	49	1	23	103	12	402	0	0	0	0	0
AM	VOLUMES	129	755	267	40	644	168	115	371	65	229	1,393	75	4,251	0	0	0	1	1
AM	APPROACH %	11%	66%	23%	5%	76%	20%	21%	67%	12%	13%	82%	4%						
AM	APP/DEPART	1,151	/	945	852	/	937	551	/	679	1,697	/	1,690	0					
AM	BEGIN PEAK HR		7:15 AM																
AM	VOLUMES	76	423	178	23	426	88	51	198	32	150	825	39	2,509					
AM	APPROACH %	11%	62%	26%	4%	79%	16%	18%	70%	11%	15%	81%	4%						
AM	PEAK HR FACTOR		0.746			0.855			0.857			0.823		0.880					
AM	APP/DEPART	677	/	513	537	/	608	281	/	399	1,014	/	989	0					
PM	4:00 PM	9	81	47	9	72	18	43	207	20	19	51	3	579	0	0	1	0	1
PM	4:15 PM	11	80	45	12	91	21	42	200	24	15	57	2	600	1	0	0	0	1
PM	4:30 PM	12	99	45	13	102	16	39	217	21	17	39	11	631	0	0	0	0	0
PM	4:45 PM	9	94	45	8	86	18	31	214	21	18	53	12	609	0	0	0	0	0
PM	5:00 PM	4	83	35	17	90	13	39	281	22	18	50	5	657	0	0	0	0	0
PM	5:15 PM	12	85	45	7	108	13	47	262	20	25	70	5	699	0	0	0	0	0
PM	5:30 PM	12	78	41	8	116	17	44	245	19	30	61	8	679	0	0	0	0	0
PM	5:45 PM	13	89	40	10	110	19	37	204	13	19	57	11	622	0	0	0	0	0
PM	VOLUMES	82	689	343	84	775	135	322	1,830	160	161	438	57	5,076	1	0	1	0	2
PM	APPROACH %	7%	62%	31%	8%	78%	14%	14%	79%	7%	25%	67%	9%						
PM	APP/DEPART	1,114	/	1,067	994	/	1,097	2,312	/	2,257	656	/	655	0					
PM	BEGIN PEAK HR		5:00 PM																
PM	VOLUMES	41	335	161	42	424	62	167	992	74	92	238	29	2,657					
PM	APPROACH %	8%	62%	30%	8%	80%	12%	14%	80%	6%	26%	66%	8%						
PM	PEAK HR FACTOR		0.945			0.936			0.901			0.898		0.950					
PM	APP/DEPART	537	/	531	528	/	590	1,233	/	1,195	359	/	341	0					

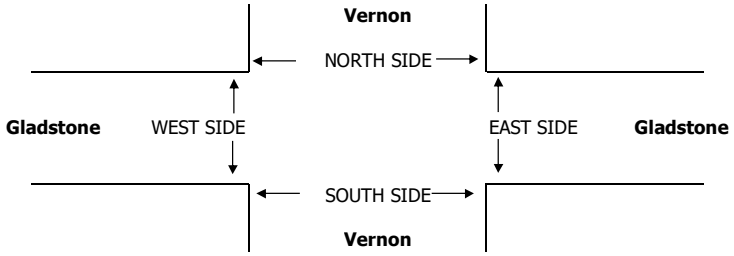

		PEDESTRIAN + BIKE CROSSINGS					PEDESTRIAN CROSSINGS					BICYCLE CROSSINGS				
		N SIDE	S SIDE	E SIDE	W SIDE	TOTAL	N SIDE	S SIDE	E SIDE	W SIDE	TOTAL	NS	SS	ES	WS	TOTAL
AM	7:00 AM	0	0	0	0	0	0	0	0	0	0	0	0	0	0	0
AM	7:15 AM	0	0	0	0	0	0	0	0	0	0	0	0	0	0	0
AM	7:30 AM	0	0	0	0	0	0	0	0	0	0	0	0	0	0	0
AM	7:45 AM	0	0	0	0	0	0	0	0	0	0	0	0	0	0	0
AM	8:00 AM	0	0	0	0	0	0	0	0	0	0	0	0	0	0	0
AM	8:15 AM	0	0	0	0	0	0	0	0	0	0	0	0	0	0	0
AM	8:30 AM	0	0	0	0	0	0	0	0	0	0	0	0	0	0	0
AM	8:45 AM	0	0	0	0	0	0	0	0	0	0	0	0	0	0	0
AM	TOTAL	0	0	0	0	0	0	0	0	0	0	0	0	0	0	0
	AM BEGIN PEAK HR	7:15 AM					0	0	0	0	0					
PM	4:00 PM	0	0	0	0	0	0	0	0	0	0	0	0	0	0	0
PM	4:15 PM	0	0	0	0	0	0	0	0	0	0	0	0	0	0	0
PM	4:30 PM	0	0	0	0	0	0	0	0	0	0	0	0	0	0	0
PM	4:45 PM	0	0	0	0	0	0	0	0	0	0	0	0	0	0	0
PM	5:00 PM	0	0	0	0	0	0	0	0	0	0	0	0	0	0	0
PM	5:15 PM	0	0	0	0	0	0	0	0	0	0	0	0	0	0	0
PM	5:30 PM	0	0	0	0	0	0	0	0	0	0	0	0	0	0	0
PM	5:45 PM	0	0	0	0	0	0	0	0	0	0	0	0	0	0	0
PM	TOTAL	0	0	0	0	0	0	0	0	0	0	0	0	0	0	0
	PM BEGIN PEAK HR	5:00 PM					0	0	0	0	0					

AimTD LLC

TURNING MOVEMENT COUNTS

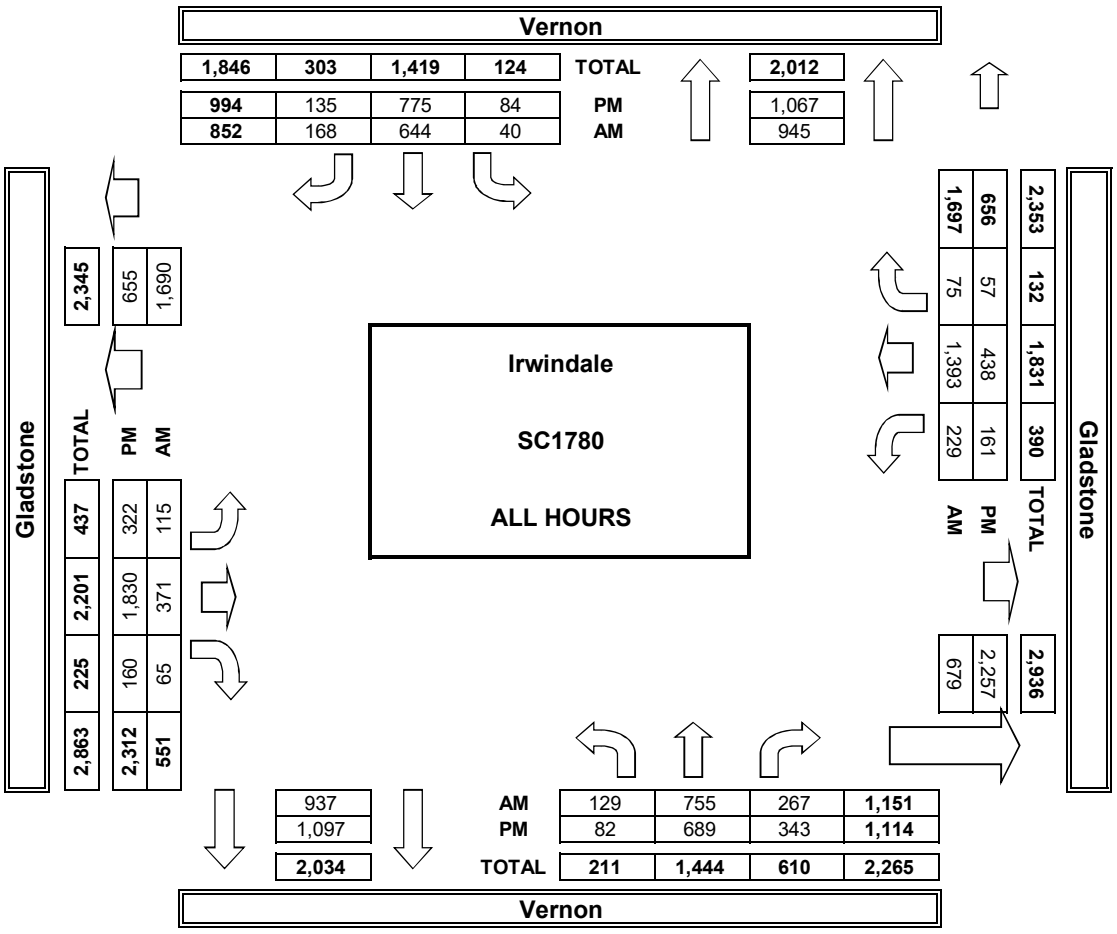

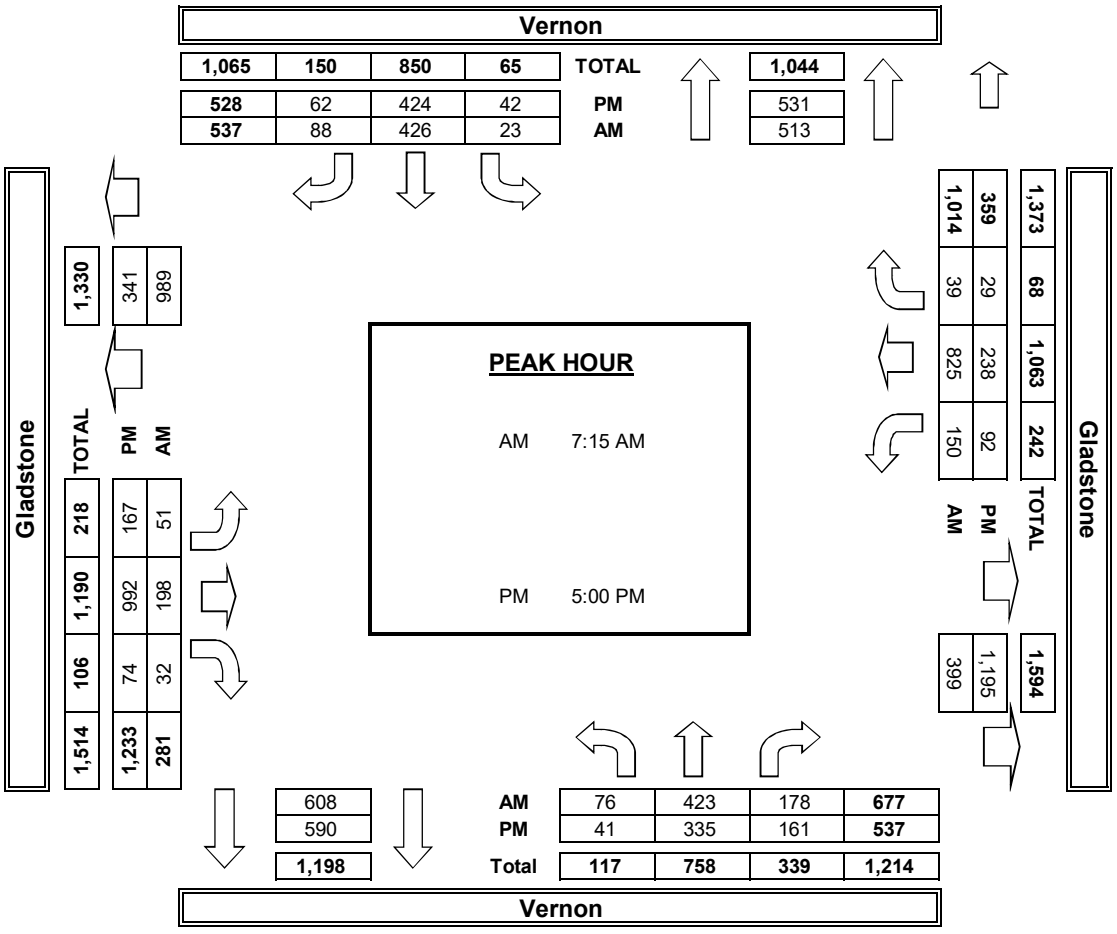

INTERSECTION TURNING MOVEMENT COUNTS

T218

PREPARED BY: AimTD LLC. tel: 714 253 7888 cs@aimtd.com

DATE:	LOCATION:	Irwindale	PROJECT #:	SC1780
Tue, Jun 5, 18	NORTH & SOUTH:	Azusa	LOCATION #:	27
	EAST & WEST:	I-210 EB Ramps	CONTROL:	SIGNAL

NOTES:

AM / PM / MD / OTHER / OTHER — ▲ N, ◄ W, E ►, S ▼

		NORTHBOUND Azusa			SOUTHBOUND Azusa			EASTBOUND I-210 EB Ramps			WESTBOUND I-210 EB Ramps			
	LANES:	NL X	NT 2	NR X	SL X	ST 2	SR 1	EL 2	ET X	ER 1	WL X	WT X	WR X	TOTAL
AM	7:00 AM	0	271	0	0	132	72	31	0	67	0	0	0	573
	7:15 AM	0	260	0	0	104	73	38	0	74	0	0	0	549
	7:30 AM	0	298	0	0	163	95	43	0	91	0	0	0	690
	7:45 AM	0	315	0	0	145	79	56	0	101	0	0	0	696
	8:00 AM	0	253	0	0	168	80	48	0	66	0	0	0	615
	8:15 AM	0	262	0	0	151	62	46	0	73	0	0	0	594
	8:30 AM	0	204	0	0	128	63	37	0	54	0	0	0	486
	8:45 AM	0	218	0	0	90	57	47	0	65	0	0	0	477
	VOLUMES	0	2,081	0	0	1,081	581	346	0	591	0	0	0	4,680
	APPROACH %	0%	100%	0%	0%	65%	35%	37%	0%	63%	0%	0%	0%	
	APP/DEPART	2,081	/	2,427	1,662	/	1,672	937	/	0	0	/	581	0
	BEGIN PEAK HR		7:30 AM											
	VOLUMES	0	1,128	0	0	627	316	193	0	331	0	0	0	2,595
	APPROACH %	0%	100%	0%	0%	66%	34%	37%	0%	63%	0%	0%	0%	
	PEAK HR FACTOR		0.895			0.914			0.834			0.000		0.932
	APP/DEPART	1,128	/	1,321	943	/	958	524	/	0	0	/	316	0
PM	4:00 PM	0	272	0	0	183	65	35	0	67	0	0	0	622
	4:15 PM	0	296	0	0	177	59	34	0	66	0	0	0	632
	4:30 PM	0	300	0	0	181	52	34	0	70	0	0	0	637
	4:45 PM	0	274	0	0	180	77	26	0	68	0	0	0	625
	5:00 PM	0	278	0	0	187	97	36	0	66	0	0	0	664
	5:15 PM	0	298	0	0	207	58	36	0	91	0	0	0	690
	5:30 PM	0	286	0	0	204	77	29	0	81	0	0	0	677
	5:45 PM	0	269	0	0	197	60	30	0	83	0	0	0	639
	VOLUMES	0	2,273	0	0	1,516	545	260	0	592	0	0	0	5,186
	APPROACH %	0%	100%	0%	0%	74%	26%	31%	0%	69%	0%	0%	0%	
	APP/DEPART	2,273	/	2,533	2,061	/	2,108	852	/	0	0	/	545	0
	BEGIN PEAK HR		5:00 PM											
	VOLUMES	0	1,131	0	0	795	292	131	0	321	0	0	0	2,670
	APPROACH %	0%	100%	0%	0%	73%	27%	29%	0%	71%	0%	0%	0%	
	PEAK HR FACTOR		0.949			0.957			0.890			0.000		0.967
	APP/DEPART	1,131	/	1,262	1,087	/	1,116	452	/	0	0	/	292	0

U-TURNS

	NB	SB	EB	WB	TTL
	0	0	0	0	
7:00 AM	0	0	0	0	0
7:15 AM	0	0	0	0	0
7:30 AM	0	0	0	0	0
7:45 AM	0	0	0	0	0
8:00 AM	0	0	0	0	0
8:15 AM	0	0	0	0	0
8:30 AM	0	0	0	0	0
8:45 AM	0	0	0	0	0
VOLUMES	0	0	0	0	0
4:00 PM	0	0	0	0	0
4:15 PM	0	0	0	0	0
4:30 PM	0	0	0	0	0
4:45 PM	0	0	0	0	0
5:00 PM	0	0	0	0	0
5:15 PM	0	0	0	0	0
5:30 PM	0	0	0	0	0
5:45 PM	0	0	0	0	0
VOLUMES	0	0	0	0	0

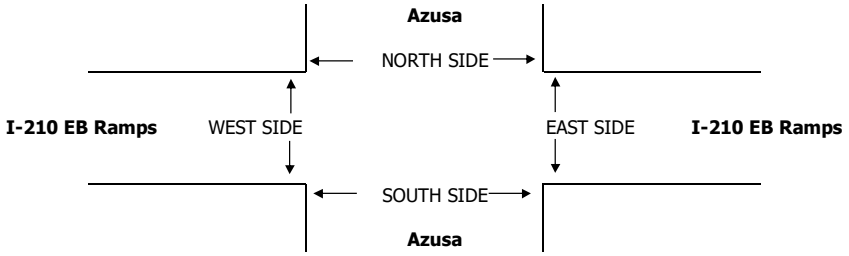

		PEDESTRIAN + BIKE CROSSINGS					PEDESTRIAN CROSSINGS					BICYCLE CROSSINGS				
		N SIDE	S SIDE	E SIDE	W SIDE	TOTAL	N SIDE	S SIDE	E SIDE	W SIDE	TOTAL	NS	SS	ES	WS	TOTAL
AM	7:00 AM	0	0	0	0	0	0	0	0	0	0	0	0	0	0	0
	7:15 AM	0	0	0	0	0	0	0	0	0	0	0	0	0	0	0
	7:30 AM	0	0	0	0	0	0	0	0	0	0	0	0	0	0	0
	7:45 AM	0	0	0	0	0	0	0	0	0	0	0	0	0	0	0
	8:00 AM	0	0	0	0	0	0	0	0	0	0	0	0	0	0	0
	8:15 AM	0	0	0	0	0	0	0	0	0	0	0	0	0	0	0
	8:30 AM	0	0	0	0	0	0	0	0	0	0	0	0	0	0	0
	8:45 AM	0	0	0	0	0	0	0	0	0	0	0	0	0	0	0
	TOTAL	0	0	0	0	0	0	0	0	0	0	0	0	0	0	0
	AM BEGIN PEAK HR	7:30 AM					0	0	0	0	0					
PM	4:00 PM	0	0	0	0	0	0	0	0	0	0	0	0	0	0	0
	4:15 PM	0	0	0	0	0	0	0	0	0	0	0	0	0	0	0
	4:30 PM	0	0	0	0	0	0	0	0	0	0	0	0	0	0	0
	4:45 PM	0	0	0	0	0	0	0	0	0	0	0	0	0	0	0
	5:00 PM	0	0	0	0	0	0	0	0	0	0	0	0	0	0	0
	5:15 PM	0	0	0	0	0	0	0	0	0	0	0	0	0	0	0
	5:30 PM	0	0	0	0	0	0	0	0	0	0	0	0	0	0	0
	5:45 PM	0	0	0	0	0	0	0	0	0	0	0	0	0	0	0
	TOTAL	0	0	0	0	0	0	0	0	0	0	0	0	0	0	0
	PM BEGIN PEAK HR	5:00 PM					0	0	0	0	0					

AimTD LLC

TURNING MOVEMENT COUNTS

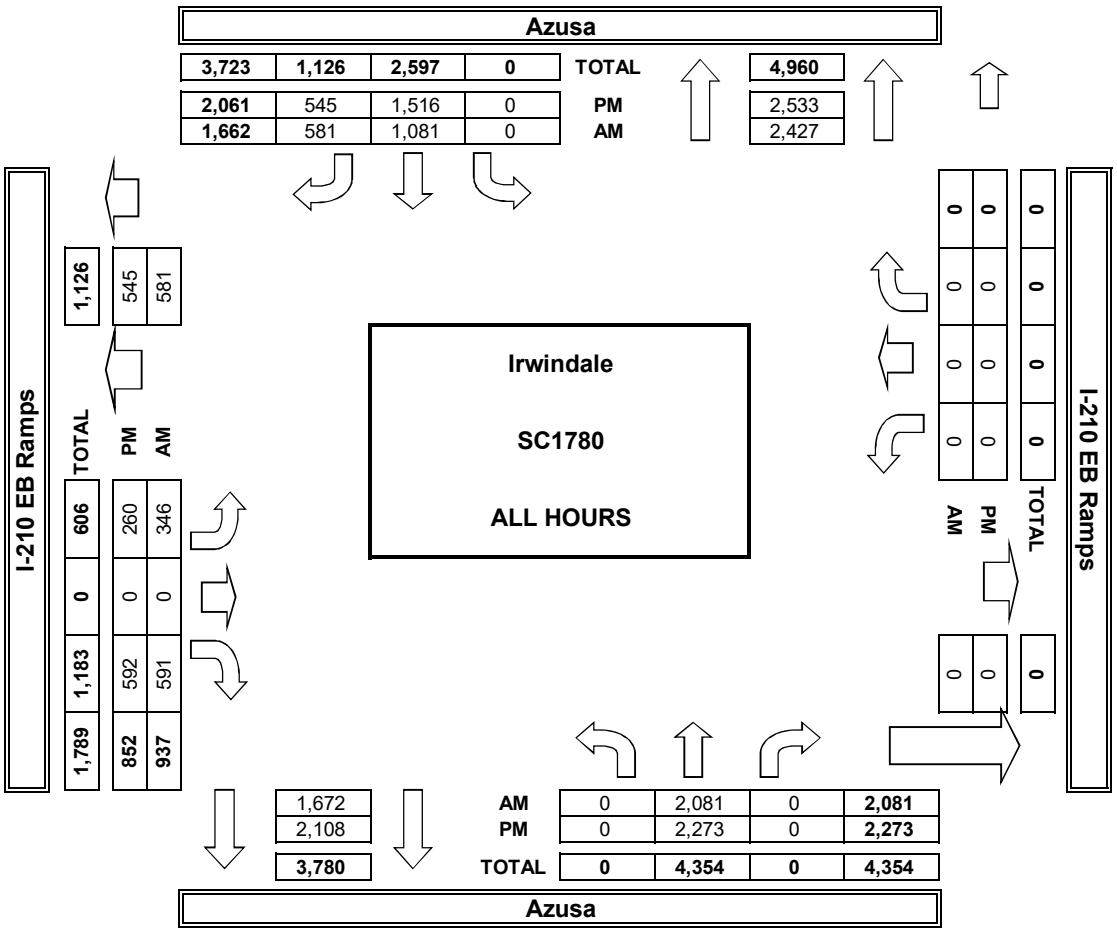

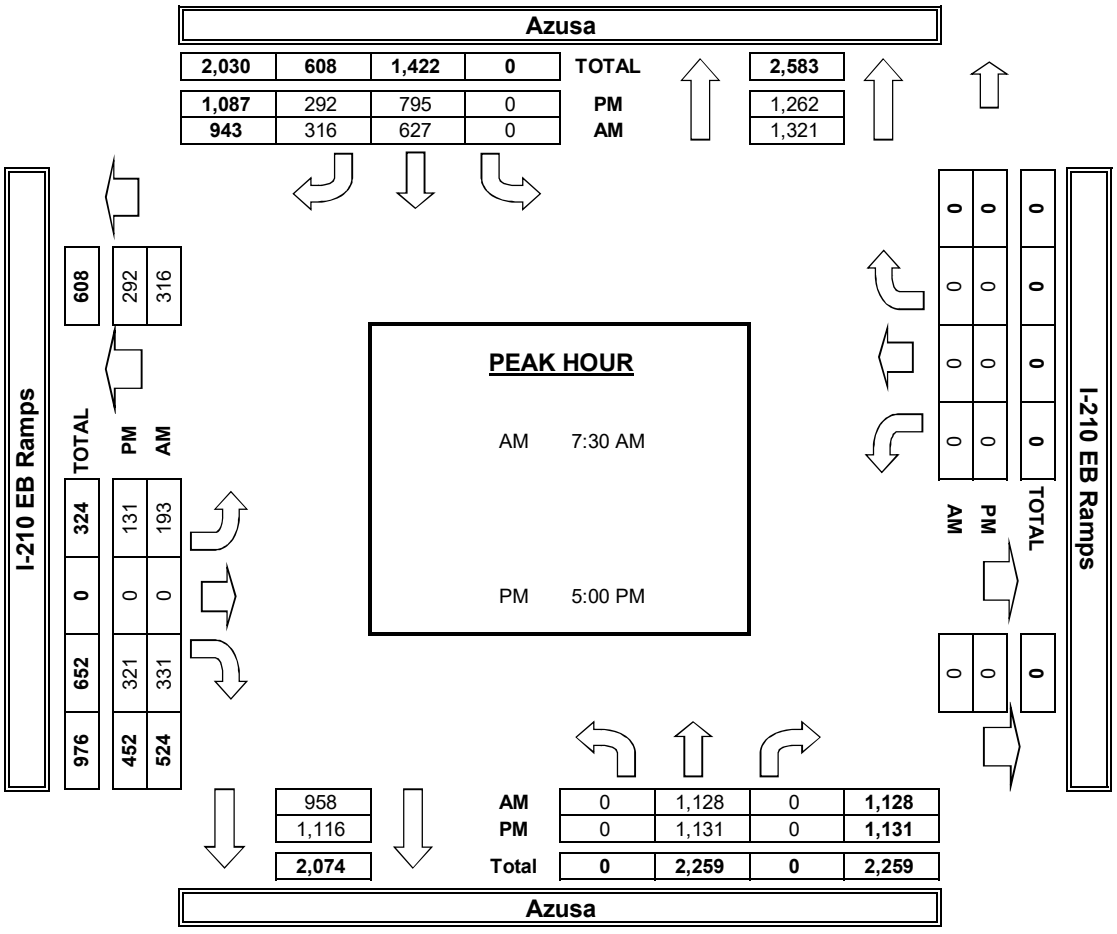

INTERSECTION TURNING MOVEMENT COUNTS

PREPARED BY: AimTD LLC. tel: 714 253 7888 cs@aimtd.com

DATE: Tue, Jun 5, 18

LOCATION: Irwindale
NORTH & SOUTH: Azuza
EAST & WEST: Paramount

PROJECT #: SC1780
LOCATION #: 28
CONTROL: SIGNAL

NOTES:

AM / PM / MD / OTHER / OTHER — ▲ N, ◄ W, E ►, S ▼

		NORTHBOUND Azuza			SOUTHBOUND Azuza			EASTBOUND Paramount			WESTBOUND Paramount			
	LANES:	NL 1	NT 2	NR 0	SL 1	ST 2	SR 0	EL 0	ET 1	ER 0	WL 0	WT 1	WR 0	TOTAL
AM	7:00 AM	29	231	0	3	161	9	35	0	10	0	0	2	480
	7:15 AM	26	218	0	0	161	9	46	0	19	0	0	0	479
	7:30 AM	19	233	0	2	208	12	38	0	15	0	0	0	527
	7:45 AM	34	263	0	4	219	24	38	0	21	1	0	4	608
	8:00 AM	46	226	0	2	186	23	38	0	19	0	0	1	541
	8:15 AM	28	214	0	3	206	16	48	0	24	1	0	3	543
	8:30 AM	19	173	0	0	171	9	42	0	18	0	0	0	432
	8:45 AM	19	178	0	1	147	6	30	0	15	0	0	1	397
	VOLUMES	220	1,736	0	15	1,459	108	315	0	141	2	0	11	4,007
	APPROACH %	11%	89%	0%	1%	92%	7%	69%	0%	31%	15%	0%	85%	
	APP/DEPART	1,956	/	2,065	1,582	/	1,602	456	/	12	13	/	328	0
	BEGIN PEAK HR		7:30 AM											
	VOLUMES	127	936	0	11	819	75	162	0	79	2	0	8	2,219
	APPROACH %	12%	88%	0%	1%	90%	8%	67%	0%	33%	20%	0%	80%	
	PEAK HR FACTOR		0.895			0.916			0.837			0.500		0.912
	APP/DEPART	1,063	/	1,108	905	/	900	241	/	9	10	/	202	0
PM	4:00 PM	14	239	0	6	196	8	40	0	6	4	1	11	525
	4:15 PM	10	256	1	4	227	13	32	0	12	2	0	14	571
	4:30 PM	27	236	0	3	216	9	49	0	18	3	0	10	571
	4:45 PM	19	243	2	11	225	12	33	0	19	7	1	11	583
	5:00 PM	24	213	1	4	214	12	44	1	27	5	2	8	555
	5:15 PM	22	226	1	6	260	14	56	0	22	3	0	8	618
	5:30 PM	26	241	0	6	267	13	37	0	19	2	4	9	624
	5:45 PM	28	206	1	12	232	19	27	1	25	2	2	14	569
	VOLUMES	170	1,860	6	52	1,837	100	318	2	148	28	10	85	4,616
	APPROACH %	8%	91%	0%	3%	92%	5%	68%	0%	32%	23%	8%	69%	
	APP/DEPART	2,036	/	2,267	1,989	/	2,015	468	/	56	123	/	278	0
	BEGIN PEAK HR		4:45 PM											
	VOLUMES	91	923	4	27	966	51	170	1	87	17	7	36	2,380
	APPROACH %	9%	91%	0%	3%	93%	5%	66%	0%	34%	28%	12%	60%	
	PEAK HR FACTOR		0.953			0.913			0.827			0.789		0.954
	APP/DEPART	1,018	/	1,131	1,044	/	1,072	258	/	30	60	/	147	0

U-TURNS

NB	SB	EB	WB	TTL
0	0	0	0	
0	1	0	0	1
0	0	0	0	0
0	1	0	0	1
0	0	0	0	0
0	1	0	0	1
0	0	0	0	0
0	0	0	0	0
0	0	0	0	0
0	3	0	0	3
0	0	0	0	0
0	0	0	0	0
0	0	0	0	0
0	2	0	0	2
0	0	0	0	0
1	0	0	0	1
1	0	0	0	1
0	2	0	0	2
2	4	0	0	6

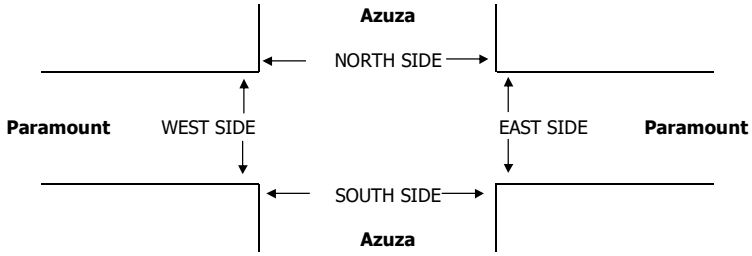

		PEDESTRIAN + BIKE CROSSINGS					PEDESTRIAN CROSSINGS					BICYCLE CROSSINGS				
		N SIDE	S SIDE	E SIDE	W SIDE	TOTAL	N SIDE	S SIDE	E SIDE	W SIDE	TOTAL	NS	SS	ES	WS	TOTAL
AM	7:00 AM	0	0	0	0	0	0	0	0	0	0	0	0	0	0	0
	7:15 AM	0	0	0	0	0	0	0	0	0	0	0	0	0	0	0
	7:30 AM	0	0	0	0	0	0	0	0	0	0	0	0	0	0	0
	7:45 AM	0	0	0	0	0	0	0	0	0	0	0	0	0	0	0
	8:00 AM	0	0	0	0	0	0	0	0	0	0	0	0	0	0	0
	8:15 AM	0	0	0	0	0	0	0	0	0	0	0	0	0	0	0
	8:30 AM	0	0	0	0	0	0	0	0	0	0	0	0	0	0	0
	8:45 AM	0	0	0	0	0	0	0	0	0	0	0	0	0	0	0
	TOTAL	0	0	0	0	0	0	0	0	0	0	0	0	0	0	0
	AM BEGIN PEAK HR	7:30 AM					0	0	0	0	0					
PM	4:00 PM	0	0	0	0	0	0	0	0	0	0	0	0	0	0	0
	4:15 PM	0	0	0	0	0	0	0	0	0	0	0	0	0	0	0
	4:30 PM	0	0	0	0	0	0	0	0	0	0	0	0	0	0	0
	4:45 PM	0	0	0	0	0	0	0	0	0	0	0	0	0	0	0
	5:00 PM	0	0	0	0	0	0	0	0	0	0	0	0	0	0	0
	5:15 PM	0	0	0	0	0	0	0	0	0	0	0	0	0	0	0
	5:30 PM	0	0	0	0	0	0	0	0	0	0	0	0	0	0	0
	5:45 PM	0	0	0	0	0	0	0	0	0	0	0	0	0	0	0
	TOTAL	0	0	0	0	0	0	0	0	0	0	0	0	0	0	0
	PM BEGIN PEAK HR	4:45 PM					0	0	0	0	0					

AimTD LLC

TURNING MOVEMENT COUNTS

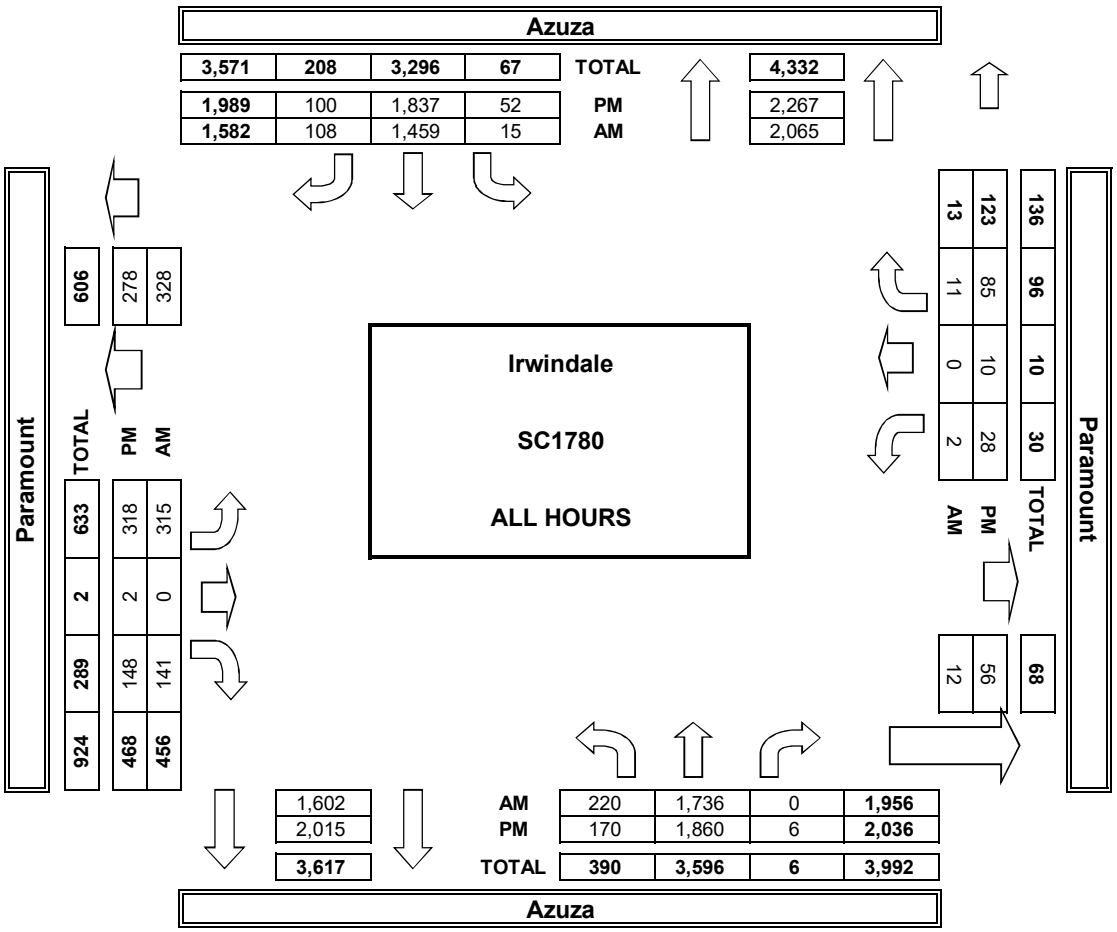

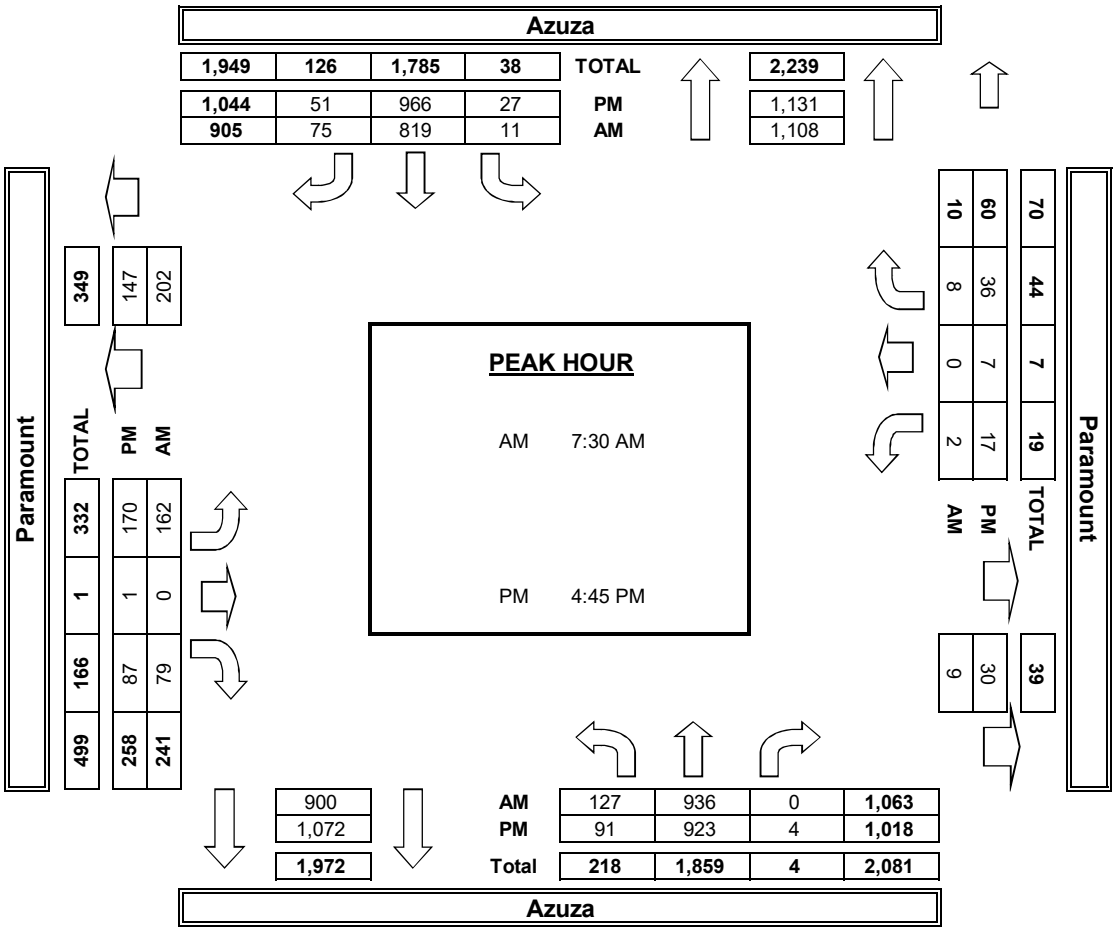

INTERSECTION TURNING MOVEMENT COUNTS

PREPARED BY: AimTD LLC. tel: 714 253 7888 cs@aimtd.com

DATE: Tue, Jun 5, 18

LOCATION: Irwindale
NORTH & SOUTH: Azusa
EAST & WEST: Gladstone

PROJECT #: SC1780
LOCATION #: 29
CONTROL: SIGNAL

NOTES:

AM / PM / MD / OTHER / OTHER — ▲ N ◄ W E ► S ▼

		NORTHBOUND Azusa			SOUTHBOUND Azusa			EASTBOUND Gladstone			WESTBOUND Gladstone				U-TURNS				
	LANES:	NL 1	NT 2	NR 1	SL 2	ST 2	SR 0	EL 1	ET 2	ER 0	WL 1	WT 2	WR 0	TOTAL	NB 0	SB 0	EB 0	WB 0	TTL
AM	7:00 AM	26	140	7	16	119	28	27	39	4	23	198	29	656	2	4	0	0	6
	7:15 AM	30	153	13	22	155	23	16	38	12	25	228	21	736	4	0	0	0	4
	7:30 AM	26	175	14	23	173	16	33	74	11	42	198	24	809	3	2	0	0	5
	7:45 AM	35	188	16	37	159	21	34	76	6	43	188	21	824	4	3	0	0	7
	8:00 AM	22	152	21	37	144	22	34	55	12	29	124	27	679	3	9	0	0	12
	8:15 AM	19	151	23	42	143	29	29	52	10	25	97	28	648	4	5	0	0	9
	8:30 AM	16	126	11	23	133	20	21	36	9	17	115	14	541	3	2	0	0	5
	8:45 AM	15	132	16	26	128	9	21	44	7	15	98	23	534	1	2	0	0	3
	VOLUMES	189	1,217	121	226	1,154	168	215	414	71	219	1,246	187	5,427	24	27	0	0	51
	APPROACH %	12%	80%	8%	15%	75%	11%	31%	59%	10%	13%	75%	11%						
	APP/DEPART	1,527	/	1,646	1,548	/	1,468	700	/	734	1,652	/	1,579	0					
	BEGIN PEAK HR		7:15 AM																
	VOLUMES	113	668	64	119	631	82	117	243	41	139	738	93	3,048					
	APPROACH %	13%	79%	8%	14%	76%	10%	29%	61%	10%	14%	76%	10%						
	PEAK HR FACTOR		0.884			0.959			0.850			0.885		0.925					
	APP/DEPART	845	/	892	832	/	825	401	/	412	970	/	919	0					
PM	4:00 PM	22	184	44	50	158	12	53	159	17	36	58	17	810	2	4	0	0	6
	4:15 PM	16	181	30	43	171	19	66	164	19	33	70	16	828	5	9	0	0	14
	4:30 PM	20	179	29	46	162	10	50	179	23	29	60	23	810	6	6	0	0	12
	4:45 PM	9	150	40	51	152	20	57	170	20	35	53	18	775	2	5	0	0	7
	5:00 PM	13	157	46	54	175	15	59	201	14	34	55	10	833	2	8	0	0	10
	5:15 PM	23	161	40	62	192	16	55	209	25	28	82	21	914	6	9	0	0	15
	5:30 PM	17	161	35	53	170	15	54	200	22	36	74	25	862	4	7	0	0	11
	5:45 PM	26	189	29	45	179	11	44	152	18	24	76	17	810	2	3	0	0	5
	VOLUMES	146	1,362	293	404	1,359	118	438	1,434	158	255	528	147	6,642	29	51	0	0	80
	APPROACH %	8%	76%	16%	21%	72%	6%	22%	71%	8%	27%	57%	16%						
	APP/DEPART	1,801	/	1,998	1,881	/	1,801	2,030	/	2,080	930	/	763	0					
	BEGIN PEAK HR		5:00 PM																
	VOLUMES	79	668	150	214	716	57	212	762	79	122	287	73	3,419					
	APPROACH %	9%	74%	17%	22%	73%	6%	20%	72%	8%	25%	60%	15%						
	PEAK HR FACTOR		0.919			0.914			0.911			0.893		0.935					
	APP/DEPART	897	/	980	987	/	931	1,053	/	1,099	482	/	409	0					

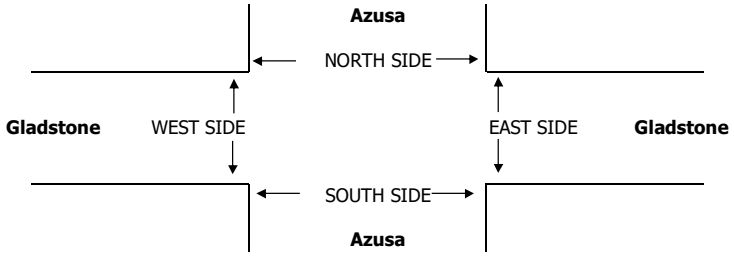

		PEDESTRIAN + BIKE CROSSINGS					PEDESTRIAN CROSSINGS					BICYCLE CROSSINGS				
		N SIDE	S SIDE	E SIDE	W SIDE	TOTAL	N SIDE	S SIDE	E SIDE	W SIDE	TOTAL	NS	SS	ES	WS	TOTAL
AM	7:00 AM	0	0	0	0	0	0	0	0	0	0	0	0	0	0	0
	7:15 AM	0	0	0	0	0	0	0	0	0	0	0	0	0	0	0
	7:30 AM	0	0	0	0	0	0	0	0	0	0	0	0	0	0	0
	7:45 AM	0	0	0	0	0	0	0	0	0	0	0	0	0	0	0
	8:00 AM	0	0	0	0	0	0	0	0	0	0	0	0	0	0	0
	8:15 AM	0	0	0	0	0	0	0	0	0	0	0	0	0	0	0
	8:30 AM	0	0	0	0	0	0	0	0	0	0	0	0	0	0	0
	8:45 AM	0	0	0	0	0	0	0	0	0	0	0	0	0	0	0
	TOTAL	0	0	0	0	0	0	0	0	0	0	0	0	0	0	0
	AM BEGIN PEAK HR	7:15 AM					0	0	0	0	0					
PM	4:00 PM	0	0	0	0	0	0	0	0	0	0	0	0	0	0	0
	4:15 PM	0	0	0	0	0	0	0	0	0	0	0	0	0	0	0
	4:30 PM	0	0	0	0	0	0	0	0	0	0	0	0	0	0	0
	4:45 PM	0	0	0	0	0	0	0	0	0	0	0	0	0	0	0
	5:00 PM	0	0	0	0	0	0	0	0	0	0	0	0	0	0	0
	5:15 PM	0	0	0	0	0	0	0	0	0	0	0	0	0	0	0
	5:30 PM	0	0	0	0	0	0	0	0	0	0	0	0	0	0	0
	5:45 PM	0	0	0	0	0	0	0	0	0	0	0	0	0	0	0
	TOTAL	0	0	0	0	0	0	0	0	0	0	0	0	0	0	0
	PM BEGIN PEAK HR	5:00 PM					0	0	0	0	0					

Counts Unlimited
PO Box 1178
Corona, CA 92878
(951) 268-6268

City of Azusa
N/S: Azusa Avenue
E/W: First Street
Weather: Clear

File Name : 07_AZU_Azusa_1st AM
Site Code : 05117483
Start Date : 8/22/2017
Page No : 1

Groups Printed- Passenger Vehicles - Large 2 Axle Vehicles - 3 Axle Vehicles - 4+ Axle Trucks

	Azusa Avenue Southbound					First Street Westbound					Azusa Avenue Northbound					First Street Eastbound							
Start Time	Left	Thru	Right	RTOR	App. Total	Left	Thru	Right	RTOR	App. Total	Left	Thru	Right	RTOR	App. Total	Left	Thru	Right	RTOR	App. Total	Exclu. Total	Inclu. Total	Int. Total
07:00 AM	5	174	11	5	190	97	51	28	13	176	21	96	119	44	236	5	10	15	9	30	71	632	703
07:15 AM	8	184	10	1	202	126	70	32	13	228	20	89	109	44	218	5	7	17	8	29	66	677	743
07:30 AM	24	238	6	2	268	74	55	27	12	156	20	128	116	60	264	9	22	22	11	53	85	741	826
07:45 AM	23	191	4	3	218	101	70	52	26	223	33	163	107	46	303	13	29	18	11	60	86	804	890
Total	60	787	31	11	878	398	246	139	64	783	94	476	451	194	1021	32	68	72	39	172	308	2854	3162
08:00 AM	17	213	11	6	241	68	57	50	28	175	13	136	78	35	227	11	24	19	9	54	78	697	775
08:15 AM	15	204	3	1	222	57	28	40	17	125	15	106	79	39	200	26	33	11	5	70	62	617	679
08:30 AM	19	157	4	3	180	52	35	30	13	117	19	95	72	32	186	5	11	8	4	24	52	507	559
08:45 AM	8	147	3	2	158	67	32	30	11	129	6	103	61	29	170	12	9	12	6	33	48	490	538
Total	59	721	21	12	801	244	152	150	69	546	53	440	290	135	783	54	77	50	24	181	240	2311	2551
Grand Total	119	1508	52	23	1679	642	398	289	133	1329	147	916	741	329	1804	86	145	122	63	353	548	5165	5713
Apprch %	7.1	89.8	3.1			48.3	29.9	21.7			8.1	50.8	41.1			24.4	41.1	34.6					
Total %	2.3	29.2	1		32.5	12.4	7.7	5.6		25.7	2.8	17.7	14.3		34.9	1.7	2.8	2.4		6.8	9.6	90.4	
Passenger Vehicles	117	1431	52		1623	601	389	270		1387	144	864	721		2054	83	144	117		404	0	0	5468
% Passenger Vehicles	98.3	94.9	100	100	95.4	93.6	97.7	93.4	95.5	94.9	98	94.3	97.3	98.8	96.3	96.5	99.3	95.9	95.2	97.1	0	0	95.7
Large 2 Axle Vehicles	2	56	0		58	15	8	15		44	2	41	15		62	3	1	2		7	0	0	171
% Large 2 Axle Vehicles	1.7	3.7	0	0	3.4	2.3	2	5.2	4.5	3	1.4	4.5	2	1.2	2.9	3.5	0.7	1.6	1.6	1.7	0	0	3
3 Axle Vehicles	0	12	0		12	3	1	1		5	1	6	2		9	0	0	2		3	0	0	29
% 3 Axle Vehicles	0	0.8	0	0	0.7	0.5	0.3	0.3	0	0.3	0.7	0.7	0.3	0	0.4	0	0	1.6	1.6	0.7	0	0	0.5
4+ Axle Trucks	0	9	0		9	23	0	3		26	0	5	3		8	0	0	1		2	0	0	45
% 4+ Axle Trucks	0	0.6	0	0	0.5	3.6	0	1	0	1.8	0	0.5	0.4	0	0.4	0	0	0.8	1.6	0.5	0	0	0.8

	Azusa Avenue Southbound				First Street Westbound				Azusa Avenue Northbound				First Street Eastbound				
Start Time	Left	Thru	Right	App. Total	Left	Thru	Right	App. Total	Left	Thru	Right	App. Total	Left	Thru	Right	App. Total	Int. Total
Peak Hour Analysis From 07:00 AM to 08:45 AM - Peak 1 of 1																	
Peak Hour for Entire Intersection Begins at 07:15 AM																	
07:15 AM	8	184	10	202	**126**	**70**	32	**228**	20	89	109	218	5	7	17	29	677
07:30 AM	**24**	**238**	6	**268**	74	55	27	156	20	128	**116**	264	9	22	**22**	53	741
07:45 AM	23	191	4	218	101	70	**52**	223	**33**	**163**	107	**303**	**13**	**29**	18	**60**	**804**
08:00 AM	17	213	**11**	241	68	57	50	175	13	136	78	227	11	24	19	54	697
Total Volume	72	826	31	929	369	252	161	782	86	516	410	1012	38	82	76	196	2919
% App. Total	7.8	88.9	3.3		47.2	32.2	20.6		8.5	51	40.5		19.4	41.8	38.8		
PHF	.750	.868	.705	.867	.732	.900	.774	.857	.652	.791	.884	.835	.731	.707	.864	.817	.908

Counts Unlimited
PO Box 1178
Corona, CA 92878
(951) 268-6268

City of Azusa
N/S: Azusa Avenue
E/W: First Street
Weather: Clear

File Name : 07_AZU_Azusa_1st AM
Site Code : 05117483
Start Date : 8/22/2017
Page No : 2

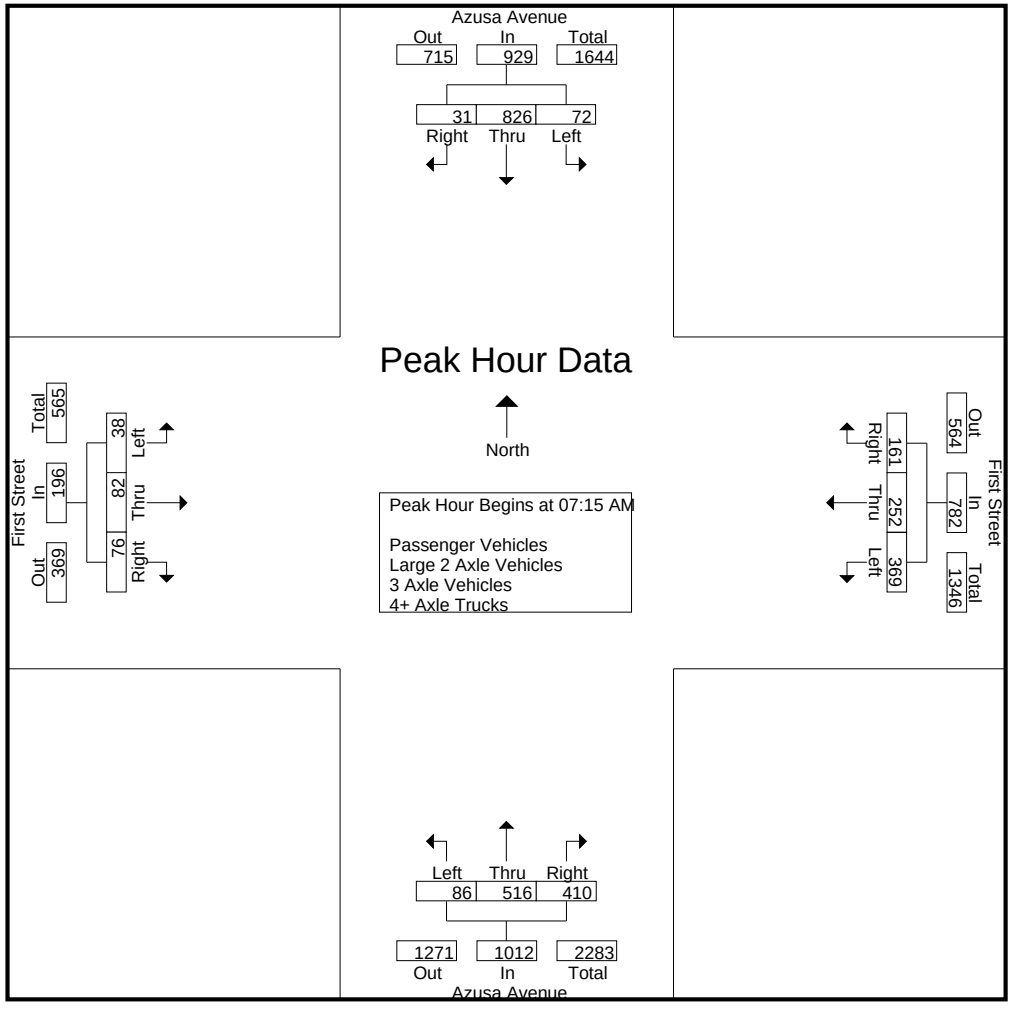

Counts Unlimited
PO Box 1178
Corona, CA 92878
(951) 268-6268

City of Azusa
N/S: Azusa Avenue
E/W: First Street
Weather: Clear

File Name : 07_AZU_Azusa_1st AM
Site Code : 05117483
Start Date : 8/22/2017
Page No : 3

	Azusa Avenue Southbound				First Street Westbound				Azusa Avenue Northbound				First Street Eastbound				
Start Time	Left	Thru	Right	App. Total	Left	Thru	Right	App. Total	Left	Thru	Right	App. Total	Left	Thru	Right	App. Total	Int. Total
Peak Hour Analysis From 07:00 AM to 08:45 AM - Peak 1 of 1																	
Peak Hour for Each Approach Begins at:																	
	07:30 AM				07:00 AM				07:00 AM				07:30 AM				
+0 mins.	**24**	**238**	6	**268**	97	51	28	176	21	96	**119**	236	9	22	**22**	53	
+15 mins.	23	191	4	218	**126**	**70**	32	**228**	20	89	109	218	13	29	18	60	
+30 mins.	17	213	**11**	241	74	55	27	156	20	128	116	264	11	24	19	54	
+45 mins.	15	204	3	222	101	70	**52**	223	**33**	**163**	107	**303**	**26**	**33**	11	**70**	
Total Volume	79	846	24	949	398	246	139	783	94	476	451	1021	59	108	70	237	
% App. Total	8.3	89.1	2.5		50.8	31.4	17.8		9.2	46.6	44.2		24.9	45.6	29.5		
PHF	.823	.889	.545	.885	.790	.879	.668	.859	.712	.730	.947	.842	.567	.818	.795	.846	

Counts Unlimited
PO Box 1178
Corona, CA 92878
(951) 268-6268

City of Azusa
N/S: Azusa Avenue
E/W: First Street
Weather: Clear

File Name : 07_AZU_Azusa_1st AM
Site Code : 05117483
Start Date : 8/22/2017
Page No : 1

Groups Printed- Passenger Vehicles

	Azusa Avenue Southbound					First Street Westbound					Azusa Avenue Northbound					First Street Eastbound							
Start Time	Left	Thru	Right	RTOR	App. Total	Left	Thru	Right	RTOR	App. Total	Left	Thru	Right	RTOR	App. Total	Left	Thru	Right	RTOR	App. Total	Exclu. Total	Inclu. Total	Int. Total
07:00 AM	5	170	11	5	186	93	51	26	13	170	21	92	117	44	230	5	10	14	8	29	70	615	685
07:15 AM	8	176	10	1	194	121	70	29	12	220	19	84	107	44	210	4	7	15	6	26	63	650	713
07:30 AM	24	229	6	2	259	70	55	25	11	150	19	122	114	60	255	9	22	21	11	52	84	716	800
07:45 AM	23	182	4	3	209	94	68	49	24	211	33	159	104	45	296	12	29	18	11	59	83	775	858
Total	60	757	31	11	848	378	244	129	60	751	92	457	442	193	991	30	68	68	36	166	300	2756	3056
08:00 AM	17	193	11	6	221	65	55	48	27	168	13	129	76	34	218	11	24	19	9	54	76	661	737
08:15 AM	15	197	3	1	215	53	28	36	17	117	15	101	74	38	190	25	32	11	5	68	61	590	651
08:30 AM	17	146	4	3	167	43	32	28	12	103	18	82	70	32	170	5	11	8	4	24	51	464	515
08:45 AM	8	138	3	2	149	62	30	29	11	121	6	95	59	28	160	12	9	11	6	32	47	462	509
Total	57	674	21	12	752	223	145	141	67	509	52	407	279	132	738	53	76	49	24	178	235	2177	2412
Grand Total	117	1431	52	23	1600	601	389	270	127	1260	144	864	721	325	1729	83	144	117	60	344	535	4933	5468
Apprch %	7.3	89.4	3.2			47.7	30.9	21.4			8.3	50	41.7			24.1	41.9	34					
Total %	2.4	29	1.1		32.4	12.2	7.9	5.5		25.5	2.9	17.5	14.6		35	1.7	2.9	2.4		7	9.8	90.2	

	Azusa Avenue Southbound				First Street Westbound				Azusa Avenue Northbound				First Street Eastbound				
Start Time	Left	Thru	Right	App. Total	Left	Thru	Right	App. Total	Left	Thru	Right	App. Total	Left	Thru	Right	App. Total	Int. Total
Peak Hour Analysis From 07:15 AM to 08:00 AM - Peak 1 of 1																	
Peak Hour for Entire Intersection Begins at 07:15 AM																	
07:15 AM	8	176	10	194	**121**	**70**	29	**220**	19	84	107	210	4	7	15	26	650
07:30 AM	**24**	**229**	6	**259**	70	55	25	150	19	122	**114**	255	9	22	**21**	52	716
07:45 AM	23	182	4	209	94	68	**49**	211	**33**	**159**	104	**296**	**12**	**29**	18	**59**	**775**
08:00 AM	17	193	**11**	221	65	55	48	168	13	129	76	218	11	24	19	54	661
Total Volume	72	780	31	883	350	248	151	749	84	494	401	979	36	82	73	191	2802
% App. Total	8.2	88.3	3.5		46.7	33.1	20.2		8.6	50.5	41		18.8	42.9	38.2		
PHF	.750	.852	.705	.852	.723	.886	.770	.851	.636	.777	.879	.827	.750	.707	.869	.809	.904

Counts Unlimited
PO Box 1178
Corona, CA 92878
(951) 268-6268

City of Azusa
N/S: Azusa Avenue
E/W: First Street
Weather: Clear

File Name : 07_AZU_Azusa_1st AM
Site Code : 05117483
Start Date : 8/22/2017
Page No : 2

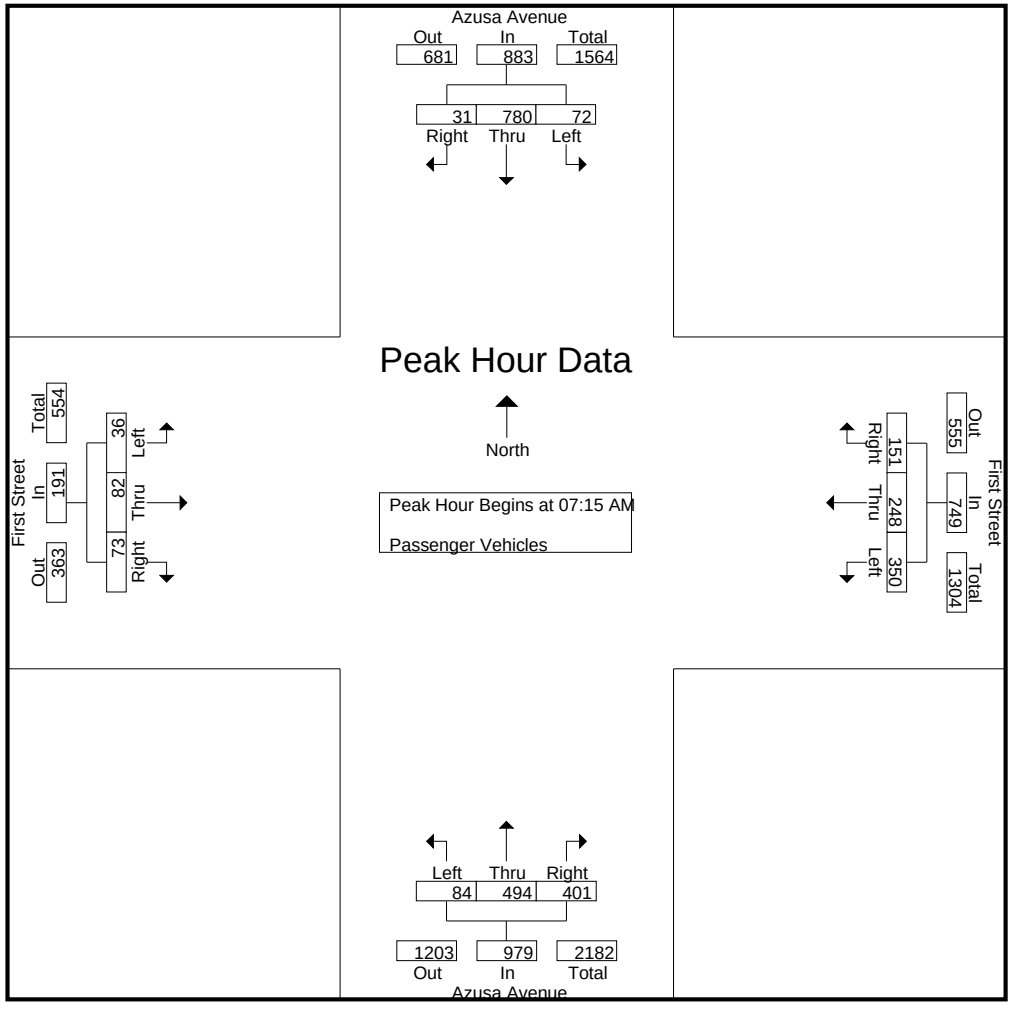

Counts Unlimited
PO Box 1178
Corona, CA 92878
(951) 268-6268

City of Azusa
N/S: Azusa Avenue
E/W: First Street
Weather: Clear

File Name : 07_AZU_Azusa_1st AM
Site Code : 05117483
Start Date : 8/22/2017
Page No : 3

	Azusa Avenue Southbound				First Street Westbound				Azusa Avenue Northbound				First Street Eastbound				
Start Time	Left	Thru	Right	App. Total	Left	Thru	Right	App. Total	Left	Thru	Right	App. Total	Left	Thru	Right	App. Total	Int. Total
Peak Hour Analysis From 07:15 AM to 08:00 AM - Peak 1 of 1																	
Peak Hour for Each Approach Begins at:																	
	07:15 AM				07:15 AM				07:15 AM				07:15 AM				
+0 mins.	8	176	10	194	**121**	**70**	29	**220**	19	84	107	210	4	7	15	26	
+15 mins.	**24**	**229**	6	**259**	70	55	25	150	19	122	**114**	255	9	22	**21**	52	
+30 mins.	23	182	4	209	94	68	**49**	211	**33**	**159**	104	**296**	**12**	**29**	18	**59**	
+45 mins.	17	193	**11**	221	65	55	48	168	13	129	76	218	11	24	19	54	
Total Volume	72	780	31	883	350	248	151	749	84	494	401	979	36	82	73	191	
% App. Total	8.2	88.3	3.5		46.7	33.1	20.2		8.6	50.5	41		18.8	42.9	38.2		
PHF	.750	.852	.705	.852	.723	.886	.770	.851	.636	.777	.879	.827	.750	.707	.869	.809	

Counts Unlimited
PO Box 1178
Corona, CA 92878
(951) 268-6268

City of Azusa
N/S: Azusa Avenue
E/W: First Street
Weather: Clear

File Name : 07_AZU_Azusa_1st AM
Site Code : 05117483
Start Date : 8/22/2017
Page No : 1

Groups Printed- Large 2 Axle Vehicles

	Azusa Avenue Southbound					First Street Westbound					Azusa Avenue Northbound					First Street Eastbound							
Start Time	Left	Thru	Right	RTOR	App. Total	Left	Thru	Right	RTOR	App. Total	Left	Thru	Right	RTOR	App. Total	Left	Thru	Right	RTOR	App. Total	Exclu. Total	Inclu. Total	Int. Total
07:00 AM	0	3	0	0	3	1	0	1	0	2	0	3	1	0	4	0	0	0	0	0	0	9	9
07:15 AM	0	5	0	0	5	1	0	3	1	4	1	4	1	0	6	1	0	1	1	2	2	17	19
07:30 AM	0	7	0	0	7	3	0	1	1	4	1	6	1	0	8	0	0	0	0	0	1	19	20
07:45 AM	0	7	0	0	7	4	1	2	2	7	0	4	3	1	7	1	0	0	0	1	3	22	25
Total	0	22	0	0	22	9	1	7	4	17	2	17	6	1	25	2	0	1	1	3	6	67	73
08:00 AM	0	14	0	0	14	1	2	2	1	5	0	7	1	1	8	0	0	0	0	0	2	27	29
08:15 AM	0	7	0	0	7	1	0	3	0	4	0	4	5	1	9	1	1	0	0	2	1	22	23
08:30 AM	2	7	0	0	9	2	3	2	1	7	0	7	1	0	8	0	0	0	0	0	1	24	25
08:45 AM	0	6	0	0	6	2	2	1	0	5	0	6	2	1	8	0	0	1	0	1	1	20	21
Total	2	34	0	0	36	6	7	8	2	21	0	24	9	3	33	1	1	1	0	3	5	93	98
Grand Total	2	56	0	0	58	15	8	15	6	38	2	41	15	4	58	3	1	2	1	6	11	160	171
Apprch %	3.4	96.6	0			39.5	21.1	39.5			3.4	70.7	25.9			50	16.7	33.3					
Total %	1.2	35	0		36.2	9.4	5	9.4		23.8	1.2	25.6	9.4		36.2	1.9	0.6	1.2		3.8	6.4	93.6	

	Azusa Avenue Southbound				First Street Westbound				Azusa Avenue Northbound				First Street Eastbound				
Start Time	Left	Thru	Right	App. Total	Left	Thru	Right	App. Total	Left	Thru	Right	App. Total	Left	Thru	Right	App. Total	Int. Total
Peak Hour Analysis From 07:15 AM to 08:00 AM - Peak 1 of 1																	
Peak Hour for Entire Intersection Begins at 07:15 AM																	
07:15 AM	0	5	0	5	1	0	**3**	4	**1**	4	1	6	**1**	0	**1**	**2**	17
07:30 AM	0	7	0	7	3	0	1	4	1	6	1	**8**	0	0	0	0	19
07:45 AM	0	7	0	7	**4**	1	2	**7**	0	4	**3**	7	1	0	0	1	22
08:00 AM	0	**14**	0	**14**	1	**2**	2	5	0	**7**	1	8	0	0	0	0	**27**
Total Volume	0	33	0	33	9	3	8	20	2	21	6	29	2	0	1	3	85
% App. Total	0	100	0		45	15	40		6.9	72.4	20.7		66.7	0	33.3		
PHF	.000	.589	.000	.589	.563	.375	.667	.714	.500	.750	.500	.906	.500	.000	.250	.375	.787

Counts Unlimited
PO Box 1178
Corona, CA 92878
(951) 268-6268

City of Azusa
N/S: Azusa Avenue
E/W: First Street
Weather: Clear

File Name : 07_AZU_Azusa_1st AM
Site Code : 05117483
Start Date : 8/22/2017
Page No : 2

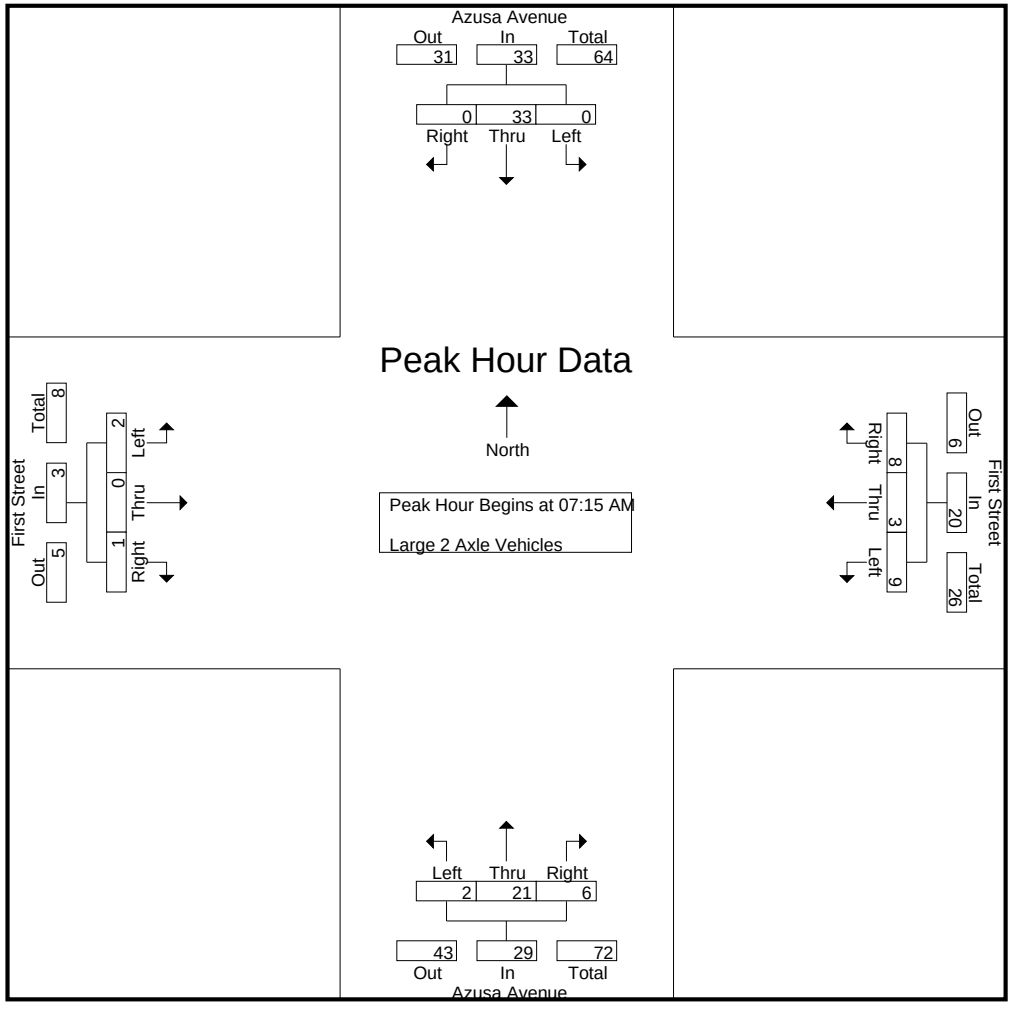

Counts Unlimited
PO Box 1178
Corona, CA 92878
(951) 268-6268

City of Azusa
N/S: Azusa Avenue
E/W: First Street
Weather: Clear

File Name : 07_AZU_Azusa_1st AM
Site Code : 05117483
Start Date : 8/22/2017

	Azusa Avenue Southbound				First Street Westbound				Azusa Avenue Northbound				First Street Eastbound				
Start Time	Left	Thru	Right	App. Total	Left	Thru	Right	App. Total	Left	Thru	Right	App. Total	Left	Thru	Right	App. Total	Int. Total
Peak Hour Analysis From 07:15 AM to 08:00 AM - Peak 1 of 1																	
Peak Hour for Each Approach Begins at:																	
	07:15 AM				07:15 AM				07:15 AM				07:15 AM				
+0 mins.	0	5	0	5	1	0	**3**	4	**1**	4	1	6	**1**	0	**1**	**2**	
+15 mins.	0	7	0	7	3	0	1	4	1	6	1	**8**	0	0	0	0	
+30 mins.	0	7	0	7	**4**	1	2	**7**	0	4	**3**	7	1	0	0	1	
+45 mins.	0	**14**	0	**14**	1	**2**	2	5	0	**7**	1	8	0	0	0	0	
Total Volume	0	33	0	33	9	3	8	20	2	21	6	29	2	0	1	3	
% App. Total	0	100	0		45	15	40		6.9	72.4	20.7		66.7	0	33.3		
PHF	.000	.589	.000	.589	.563	.375	.667	.714	.500	.750	.500	.906	.500	.000	.250	.375	

Counts Unlimited
PO Box 1178
Corona, CA 92878
(951) 268-6268

City of Azusa
N/S: Azusa Avenue
E/W: First Street
Weather: Clear

File Name : 07_AZU_Azusa_1st AM
Site Code : 05117483
Start Date : 8/22/2017

Groups Printed- 3 Axle Vehicles

	Azusa Avenue Southbound					First Street Westbound					Azusa Avenue Northbound					First Street Eastbound							
Start Time	Left	Thru	Right	RTOR	App. Total	Left	Thru	Right	RTOR	App. Total	Left	Thru	Right	RTOR	App. Total	Left	Thru	Right	RTOR	App. Total	Exclu. Total	Inclu. Total	Int. Total
07:00 AM	0	0	0	0	0	0	0	0	0	0	0	1	0	0	1	0	0	1	1	1	1	2	3
07:15 AM	0	0	0	0	0	0	0	0	0	0	0	0	1	0	1	0	0	0	0	0	0	1	1
07:30 AM	0	0	0	0	0	0	0	1	0	1	0	0	0	0	0	0	0	1	0	1	0	2	2
07:45 AM	0	2	0	0	2	1	1	0	0	2	0	0	0	0	0	0	0	0	0	0	0	4	4
Total	0	2	0	0	2	1	1	1	0	3	0	1	1	0	2	0	0	2	1	2	1	9	10
08:00 AM	0	5	0	0	5	0	0	0	0	0	0	0	1	0	1	0	0	0	0	0	0	6	6
08:15 AM	0	0	0	0	0	1	0	0	0	1	0	0	0	0	0	0	0	0	0	0	0	1	1
08:30 AM	0	2	0	0	2	1	0	0	0	1	1	3	0	0	4	0	0	0	0	0	0	7	7
08:45 AM	0	3	0	0	3	0	0	0	0	0	0	2	0	0	2	0	0	0	0	0	0	5	5
Total	0	10	0	0	10	2	0	0	0	2	1	5	1	0	7	0	0	0	0	0	0	19	19
Grand Total	0	12	0	0	12	3	1	1	0	5	1	6	2	0	9	0	0	2	1	2	1	28	29
Apprch %	0	100	0			60	20	20			11.1	66.7	22.2			0	0	100					
Total %	0	42.9	0		42.9	10.7	3.6	3.6		17.9	3.6	21.4	7.1		32.1	0	0	7.1		7.1	3.4	96.6	

	Azusa Avenue Southbound				First Street Westbound				Azusa Avenue Northbound				First Street Eastbound				
Start Time	Left	Thru	Right	App. Total	Left	Thru	Right	App. Total	Left	Thru	Right	App. Total	Left	Thru	Right	App. Total	Int. Total
Peak Hour Analysis From 07:15 AM to 08:00 AM - Peak 1 of 1																	
Peak Hour for Entire Intersection Begins at 07:15 AM																	
07:15 AM	0	0	0	0	0	0	0	0	0	0	**1**	**1**	0	0	0	0	1
07:30 AM	0	0	0	0	0	0	**1**	1	0	0	0	0	0	0	**1**	**1**	2
07:45 AM	0	2	0	2	**1**	**1**	0	**2**	0	0	0	0	0	0	0	0	4
08:00 AM	0	**5**	0	**5**	0	0	0	0	0	0	1	1	0	0	0	0	**6**
Total Volume	0	7	0	7	1	1	1	3	0	0	2	2	0	0	1	1	13
% App. Total	0	100	0		33.3	33.3	33.3		0	0	100		0	0	100		
PHF	.000	.350	.000	.350	.250	.250	.250	.375	.000	.000	.500	.500	.000	.000	.250	.250	.542

Counts Unlimited
PO Box 1178
Corona, CA 92878
(951) 268-6268

City of Azusa
N/S: Azusa Avenue
E/W: First Street
Weather: Clear

File Name : 07_AZU_Azusa_1st AM
Site Code : 05117483
Start Date : 8/22/2017
Page No : 2

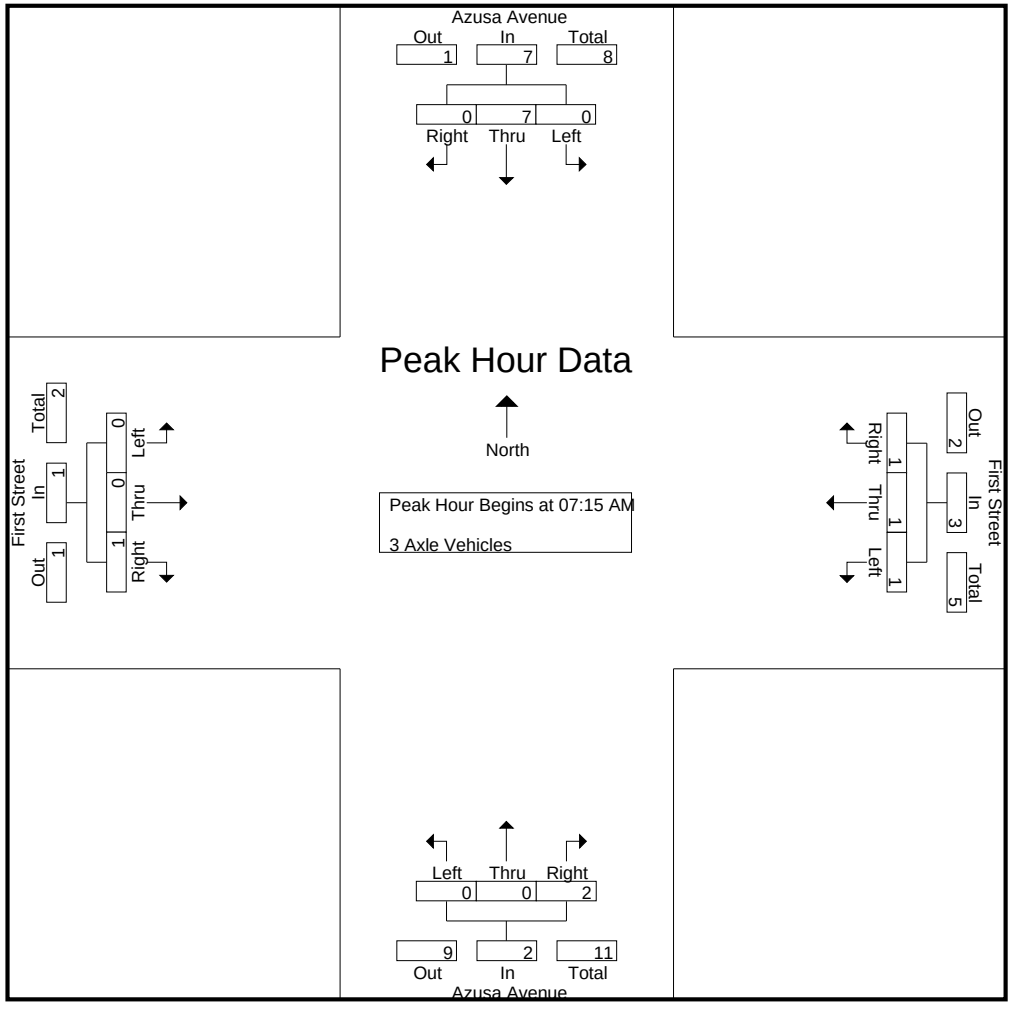

Counts Unlimited
PO Box 1178
Corona, CA 92878
(951) 268-6268

City of Azusa
N/S: Azusa Avenue
E/W: First Street
Weather: Clear

File Name : 07_AZU_Azusa_1st AM
Site Code : 05117483
Start Date : 8/22/2017
Page No : 3

	Azusa Avenue Southbound				First Street Westbound				Azusa Avenue Northbound				First Street Eastbound				
Start Time	Left	Thru	Right	App. Total	Left	Thru	Right	App. Total	Left	Thru	Right	App. Total	Left	Thru	Right	App. Total	Int. Total
Peak Hour Analysis From 07:15 AM to 08:00 AM - Peak 1 of 1																	
Peak Hour for Each Approach Begins at:																	
	07:15 AM				07:15 AM				07:15 AM				07:15 AM				
+0 mins.	0	0	0	0	0	0	0	0	0	0	**1**	**1**	0	0	0	0	
+15 mins.	0	0	0	0	0	0	**1**	1	0	0	0	0	0	0	**1**	**1**	
+30 mins.	0	2	0	2	**1**	**1**	0	**2**	0	0	0	0	0	0	0	0	
+45 mins.	0	**5**	0	**5**	0	0	0	0	0	0	1	1	0	0	0	0	
Total Volume	0	7	0	7	1	1	1	3	0	0	2	2	0	0	1	1	
% App. Total	0	100	0		33.3	33.3	33.3		0	0	100		0	0	100		
PHF	.000	.350	.000	.350	.250	.250	.250	.375	.000	.000	.500	.500	.000	.000	.250	.250	

Counts Unlimited
PO Box 1178
Corona, CA 92878
(951) 268-6268

City of Azusa
N/S: Azusa Avenue
E/W: First Street
Weather: Clear

File Name : 07_AZU_Azusa_1st AM
Site Code : 05117483
Start Date : 8/22/2017
Page No : 1

Groups Printed- 4+ Axle Trucks

	Azusa Avenue Southbound					First Street Westbound					Azusa Avenue Northbound					First Street Eastbound							
Start Time	Left	Thru	Right	RTOR	App. Total	Left	Thru	Right	RTOR	App. Total	Left	Thru	Right	RTOR	App. Total	Left	Thru	Right	RTOR	App. Total	Exclu. Total	Inclu. Total	Int. Total
07:00 AM	0	1	0	0	1	3	0	1	0	4	0	0	1	0	1	0	0	0	0	0	0	6	6
07:15 AM	0	3	0	0	3	4	0	0	0	4	0	1	0	0	1	0	0	1	1	1	1	9	10
07:30 AM	0	2	0	0	2	1	0	0	0	1	0	0	1	0	1	0	0	0	0	0	0	4	4
07:45 AM	0	0	0	0	0	2	0	1	0	3	0	0	0	0	0	0	0	0	0	0	0	3	3
Total	0	6	0	0	6	10	0	2	0	12	0	1	2	0	3	0	0	1	1	1	1	22	23
08:00 AM	0	1	0	0	1	2	0	0	0	2	0	0	0	0	0	0	0	0	0	0	0	3	3
08:15 AM	0	0	0	0	0	2	0	1	0	3	0	1	0	0	1	0	0	0	0	0	0	4	4
08:30 AM	0	2	0	0	2	6	0	0	0	6	0	3	1	0	4	0	0	0	0	0	0	12	12
08:45 AM	0	0	0	0	0	3	0	0	0	3	0	0	0	0	0	0	0	0	0	0	0	3	3
Total	0	3	0	0	3	13	0	1	0	14	0	4	1	0	5	0	0	0	0	0	0	22	22
Grand Total	0	9	0	0	9	23	0	3	0	26	0	5	3	0	8	0	0	1	1	1	1	44	45
Apprch %	0	100	0			88.5	0	11.5			0	62.5	37.5			0	0	100					
Total %	0	20.5	0		20.5	52.3	0	6.8		59.1	0	11.4	6.8		18.2	0	0	2.3		2.3	2.2	97.8	

	Azusa Avenue Southbound				First Street Westbound				Azusa Avenue Northbound				First Street Eastbound				
Start Time	Left	Thru	Right	App. Total	Left	Thru	Right	App. Total	Left	Thru	Right	App. Total	Left	Thru	Right	App. Total	Int. Total
Peak Hour Analysis From 07:15 AM to 08:00 AM - Peak 1 of 1																	
Peak Hour for Entire Intersection Begins at 07:15 AM																	
07:15 AM	0	**3**	0	**3**	**4**	0	0	**4**	0	**1**	0	**1**	0	0	**1**	**1**	**9**
07:30 AM	0	2	0	2	1	0	0	1	0	0	**1**	1	0	0	0	0	4
07:45 AM	0	0	0	0	2	0	**1**	3	0	0	0	0	0	0	0	0	3
08:00 AM	0	1	0	1	2	0	0	2	0	0	0	0	0	0	0	0	3
Total Volume	0	6	0	6	9	0	1	10	0	1	1	2	0	0	1	1	19
% App. Total	0	100	0		90	0	10		0	50	50		0	0	100		
PHF	.000	.500	.000	.500	.563	.000	.250	.625	.000	.250	.250	.500	.000	.000	.250	.250	.528

Counts Unlimited
PO Box 1178
Corona, CA 92878
(951) 268-6268

City of Azusa
N/S: Azusa Avenue
E/W: First Street
Weather: Clear

File Name : 07_AZU_Azusa_1st AM
Site Code : 05117483
Start Date : 8/22/2017
Page No : 2

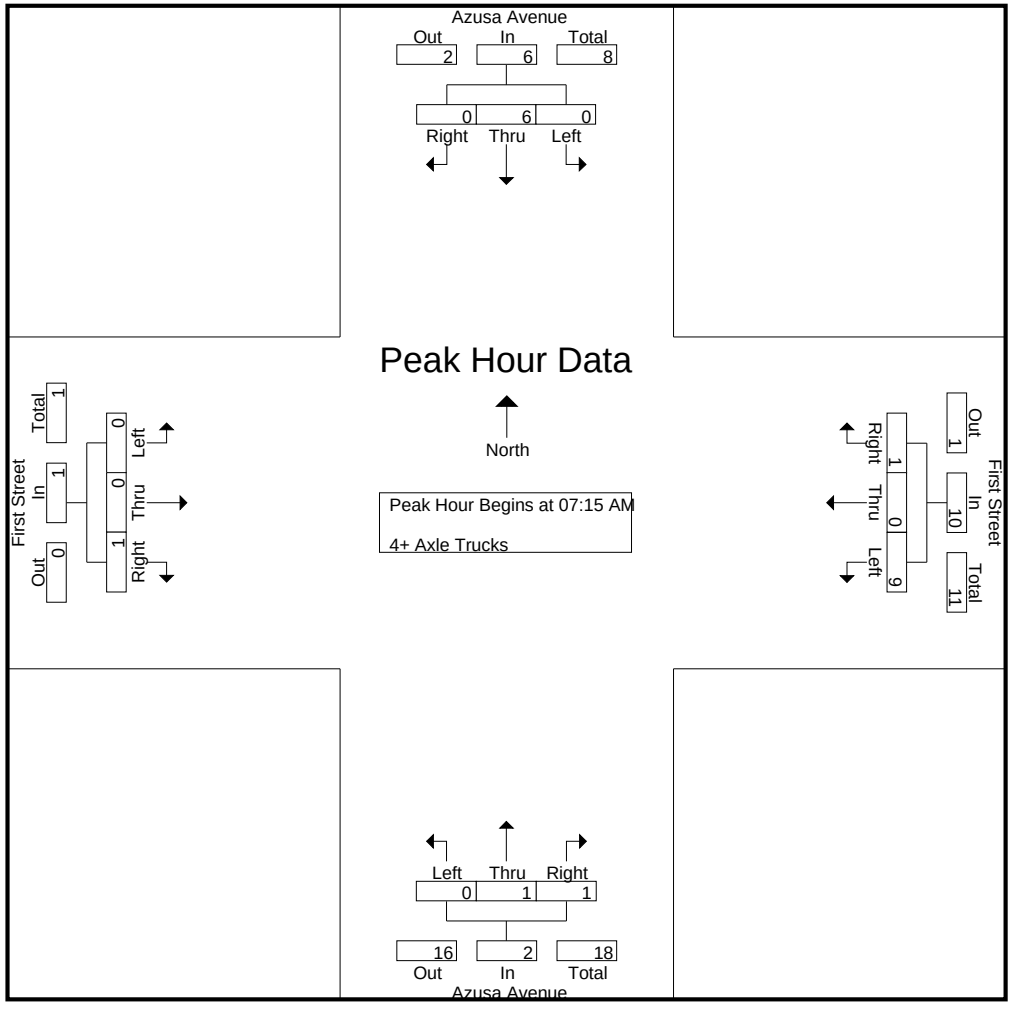

Counts Unlimited
PO Box 1178
Corona, CA 92878
(951) 268-6268

City of Azusa
N/S: Azusa Avenue
E/W: First Street
Weather: Clear

File Name : 07_AZU_Azusa_1st AM
Site Code : 05117483
Start Date : 8/22/2017
Page No : 3

	Azusa Avenue Southbound				First Street Westbound				Azusa Avenue Northbound				First Street Eastbound				
Start Time	Left	Thru	Right	App. Total	Left	Thru	Right	App. Total	Left	Thru	Right	App. Total	Left	Thru	Right	App. Total	Int. Total
Peak Hour Analysis From 07:15 AM to 08:00 AM - Peak 1 of 1																	
Peak Hour for Each Approach Begins at:																	
	07:15 AM				07:15 AM				07:15 AM				07:15 AM				
+0 mins.	0	**3**	0	**3**	**4**	0	0	**4**	0	**1**	0	**1**	0	0	**1**	**1**	
+15 mins.	0	2	0	2	1	0	0	1	0	0	**1**	1	0	0	0	0	
+30 mins.	0	0	0	0	2	0	**1**	3	0	0	0	0	0	0	0	0	
+45 mins.	0	1	0	1	2	0	0	2	0	0	0	0	0	0	0	0	
Total Volume	0	6	0	6	9	0	1	10	0	1	1	2	0	0	1	1	
% App. Total	0	100	0		90	0	10		0	50	50		0	0	100		
PHF	.000	.500	.000	.500	.563	.000	.250	.625	.000	.250	.250	.500	.000	.000	.250	.250	

Counts Unlimited
PO Box 1178
Corona, CA 92878
(951) 268-6268

City of Azusa
N/S: Azusa Avenue
E/W: First Street
Weather: Clear

File Name : 07_AZU_Azusa_1st PM
Site Code : 05117483
Start Date : 8/22/2017
Page No : 1

Groups Printed- Passenger Vehicles - Large 2 Axle Vehicles - 3 Axle Vehicles - 4+ Axle Trucks

	Azusa Avenue Southbound					First Street Westbound					Azusa Avenue Northbound					First Street Eastbound							
Start Time	Left	Thru	Right	RTOR	App. Total	Left	Thru	Right	RTOR	App. Total	Left	Thru	Right	RTOR	App. Total	Left	Thru	Right	RTOR	App. Total	Exclu. Total	Inclu. Total	Int. Total
04:00 PM	24	194	6	1	224	74	25	47	22	146	19	126	67	33	212	21	27	17	5	65	61	647	708
04:15 PM	31	171	9	1	211	80	31	43	22	154	8	127	104	34	239	19	31	18	8	68	65	672	737
04:30 PM	32	217	5	4	254	56	32	28	20	116	18	120	84	36	222	27	28	7	4	62	64	654	718
04:45 PM	20	170	8	4	198	72	41	32	15	145	10	114	91	30	215	17	41	10	5	68	54	626	680
Total	107	752	28	10	887	282	129	150	79	561	55	487	346	133	888	84	127	52	22	263	244	2599	2843
05:00 PM	20	221	5	1	246	66	36	36	13	138	14	103	70	35	187	19	47	23	8	89	57	660	717
05:15 PM	35	197	4	1	236	67	38	38	14	143	26	148	80	34	254	16	52	23	5	91	54	724	778
05:30 PM	29	209	7	1	245	80	45	43	16	168	20	112	96	46	228	14	31	22	9	67	72	708	780
05:45 PM	33	210	4	0	247	75	45	31	10	151	18	142	84	32	244	23	45	17	8	85	50	727	777
Total	117	837	20	3	974	288	164	148	53	600	78	505	330	147	913	72	175	85	30	332	233	2819	3052
Grand Total	224	1589	48	13	1861	570	293	298	132	1161	133	992	676	280	1801	156	302	137	52	595	477	5418	5895
Apprch %	12	85.4	2.6			49.1	25.2	25.7			7.4	55.1	37.5			26.2	50.8	23					
Total %	4.1	29.3	0.9		34.3	10.5	5.4	5.5		21.4	2.5	18.3	12.5		33.2	2.9	5.6	2.5		11	8.1	91.9	
Passenger Vehicles	218	1555	48		1834	550	285	287		1249	131	965	664		2033	154	297	135		638	0	0	5754
% Passenger Vehicles	97.3	97.9	100	100	97.9	96.5	97.3	96.3	96.2	96.6	98.5	97.3	98.2	97.5	97.7	98.7	98.3	98.5	100	98.6	0	0	97.6
Large 2 Axle Vehicles	5	25	0		30	12	8	7		30	2	22	11		42	2	5	1		8	0	0	110
% Large 2 Axle Vehicles	2.2	1.6	0	0	1.6	2.1	2.7	2.3	2.3	2.3	1.5	2.2	1.6	2.5	2	1.3	1.7	0.7	0	1.2	0	0	1.9
3 Axle Vehicles	1	4	0		5	1	0	0		1	0	3	0		3	0	0	0		0	0	0	9
% 3 Axle Vehicles	0.4	0.3	0	0	0.3	0.2	0	0	0	0.1	0	0.3	0	0	0.1	0	0	0	0	0	0	0	0.2
4+ Axle Trucks	0	5	0		5	7	0	4		13	0	2	1		3	0	0	1		1	0	0	22
% 4+ Axle Trucks	0	0.3	0	0	0.3	1.2	0	1.3	1.5	1	0	0.2	0.1	0	0.1	0	0	0.7	0	0.2	0	0	0.4

	Azusa Avenue Southbound				First Street Westbound				Azusa Avenue Northbound				First Street Eastbound				
Start Time	Left	Thru	Right	App. Total	Left	Thru	Right	App. Total	Left	Thru	Right	App. Total	Left	Thru	Right	App. Total	Int. Total
Peak Hour Analysis From 04:00 PM to 05:45 PM - Peak 1 of 1																	
Peak Hour for Entire Intersection Begins at 05:00 PM																	
05:00 PM	20	**221**	5	246	66	36	36	138	14	103	70	187	19	47	**23**	89	660
05:15 PM	**35**	197	4	236	67	38	38	143	**26**	**148**	80	**254**	16	**52**	23	**91**	724
05:30 PM	29	209	**7**	245	**80**	**45**	**43**	**168**	20	112	**96**	228	14	31	22	67	708
05:45 PM	33	210	4	**247**	75	45	31	151	18	142	84	244	**23**	45	17	85	**727**
Total Volume	117	837	20	974	288	164	148	600	78	505	330	913	72	175	85	332	2819
% App. Total	12	85.9	2.1		48	27.3	24.7		8.5	55.3	36.1		21.7	52.7	25.6		
PHF	.836	.947	.714	.986	.900	.911	.860	.893	.750	.853	.859	.899	.783	.841	.924	.912	.969

Counts Unlimited
PO Box 1178
Corona, CA 92878
(951) 268-6268

City of Azusa
N/S: Azusa Avenue
E/W: First Street
Weather: Clear

File Name : 07_AZU_Azusa_1st PM
Site Code : 05117483
Start Date : 8/22/2017
Page No : 2

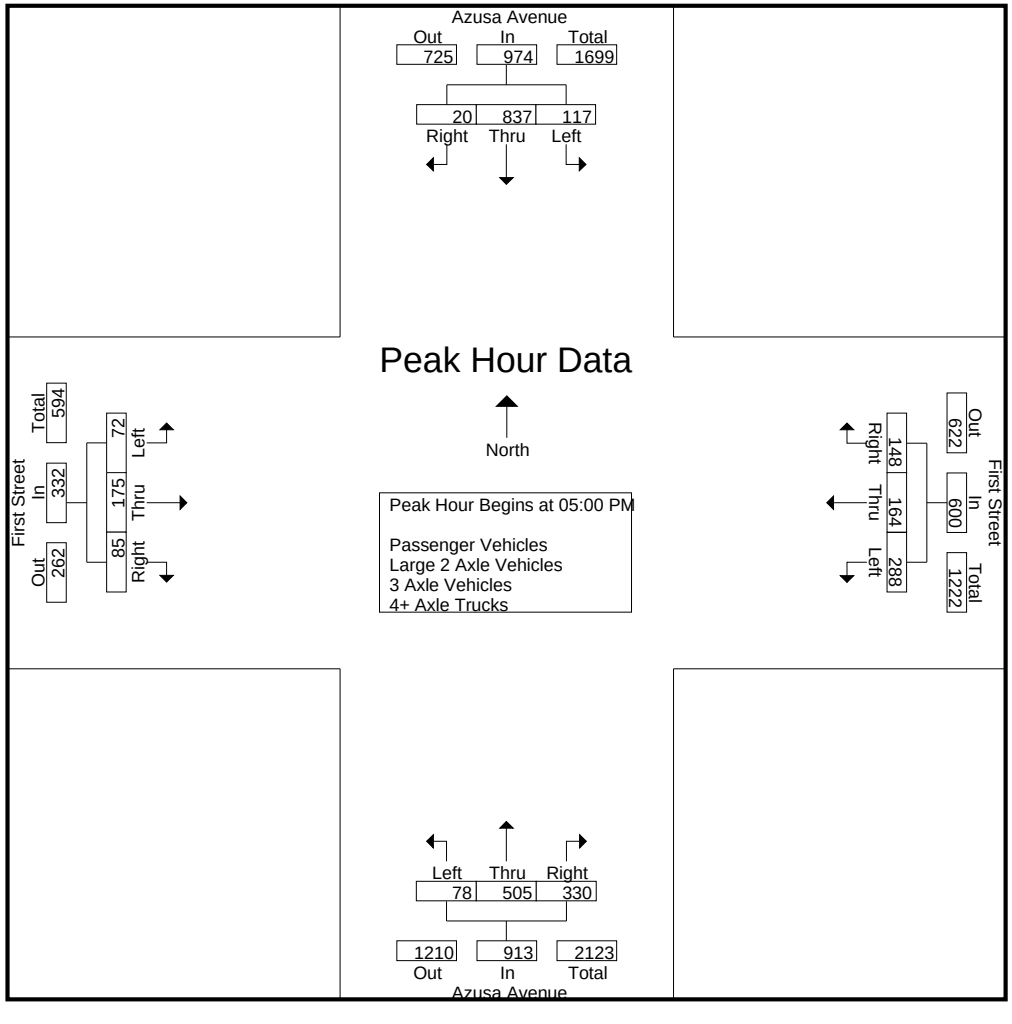

Counts Unlimited
PO Box 1178
Corona, CA 92878
(951) 268-6268

City of Azusa
N/S: Azusa Avenue
E/W: First Street
Weather: Clear

File Name : 07_AZU_Azusa_1st PM
Site Code : 05117483
Start Date : 8/22/2017
Page No : 3

	Azusa Avenue Southbound				First Street Westbound				Azusa Avenue Northbound				First Street Eastbound				
Start Time	Left	Thru	Right	App. Total	Left	Thru	Right	App. Total	Left	Thru	Right	App. Total	Left	Thru	Right	App. Total	Int. Total
Peak Hour Analysis From 04:00 PM to 05:45 PM - Peak 1 of 1																	
Peak Hour for Each Approach Begins at:																	
	05:00 PM				05:00 PM				05:00 PM				05:00 PM				
+0 mins.	20	**221**	5	246	66	36	36	138	14	103	70	187	19	47	**23**	89	
+15 mins.	**35**	197	4	236	67	38	38	143	**26**	**148**	80	**254**	16	**52**	23	**91**	
+30 mins.	29	209	**7**	245	**80**	**45**	**43**	**168**	20	112	**96**	228	14	31	22	67	
+45 mins.	33	210	4	**247**	75	45	31	151	18	142	84	244	**23**	45	17	85	
Total Volume	117	837	20	974	288	164	148	600	78	505	330	913	72	175	85	332	
% App. Total	12	85.9	2.1		48	27.3	24.7		8.5	55.3	36.1		21.7	52.7	25.6		
PHF	.836	.947	.714	.986	.900	.911	.860	.893	.750	.853	.859	.899	.783	.841	.924	.912	

Counts Unlimited
PO Box 1178
Corona, CA 92878
(951) 268-6268

City of Azusa
N/S: Azusa Avenue
E/W: First Street
Weather: Clear

File Name : 07_AZU_Azusa_1st PM
Site Code : 05117483
Start Date : 8/22/2017
Page No : 1

Groups Printed- Passenger Vehicles

	Azusa Avenue Southbound					First Street Westbound					Azusa Avenue Northbound					First Street Eastbound							
Start Time	Left	Thru	Right	RTOR	App. Total	Left	Thru	Right	RTOR	App. Total	Left	Thru	Right	RTOR	App. Total	Left	Thru	Right	RTOR	App. Total	Exclu. Total	Inclu. Total	Int. Total
04:00 PM	24	190	6	1	220	70	24	43	20	137	18	121	65	33	204	20	27	16	5	63	59	624	683
04:15 PM	30	164	9	1	203	74	31	43	22	148	8	122	103	33	233	19	30	18	8	67	64	651	715
04:30 PM	30	213	5	4	248	54	30	26	19	110	18	118	82	35	218	27	28	6	4	61	62	637	699
04:45 PM	19	166	8	4	193	72	39	29	14	140	10	111	90	29	211	17	40	10	5	67	52	611	663
Total	103	733	28	10	864	270	124	141	75	535	54	472	340	130	866	83	125	50	22	258	237	2523	2760
05:00 PM	20	218	5	1	243	64	35	35	12	134	13	100	68	34	181	18	46	23	8	87	55	645	700
05:15 PM	34	195	4	1	233	65	36	38	14	139	26	147	78	33	251	16	51	23	5	90	53	713	766
05:30 PM	29	203	7	1	239	76	45	43	16	164	20	108	96	46	224	14	31	22	9	67	72	694	766
05:45 PM	32	206	4	0	242	75	45	30	10	150	18	138	82	30	238	23	44	17	8	84	48	714	762
Total	115	822	20	3	957	280	161	146	52	587	77	493	324	143	894	71	172	85	30	328	228	2766	2994
Grand Total	218	1555	48	13	1821	550	285	287	127	1122	131	965	664	273	1760	154	297	135	52	586	465	5289	5754
Apprch %	12	85.4	2.6			49	25.4	25.6			7.4	54.8	37.7			26.3	50.7	23					
Total %	4.1	29.4	0.9		34.4	10.4	5.4	5.4		21.2	2.5	18.2	12.6		33.3	2.9	5.6	2.6		11.1	8.1	91.9	

	Azusa Avenue Southbound				First Street Westbound				Azusa Avenue Northbound				First Street Eastbound				
Start Time	Left	Thru	Right	App. Total	Left	Thru	Right	App. Total	Left	Thru	Right	App. Total	Left	Thru	Right	App. Total	Int. Total
Peak Hour Analysis From 05:00 PM to 05:45 PM - Peak 1 of 1																	
Peak Hour for Entire Intersection Begins at 05:00 PM																	
05:00 PM	20	**218**	5	**243**	64	35	35	134	13	100	68	181	18	46	**23**	87	645
05:15 PM	**34**	195	4	233	65	36	38	139	**26**	**147**	78	**251**	16	**51**	23	**90**	713
05:30 PM	29	203	**7**	239	**76**	**45**	**43**	**164**	20	108	**96**	224	14	31	22	67	694
05:45 PM	32	206	4	242	75	45	30	150	18	138	82	238	**23**	44	17	84	**714**
Total Volume	115	822	20	957	280	161	146	587	77	493	324	894	71	172	85	328	2766
% App. Total	12	85.9	2.1		47.7	27.4	24.9		8.6	55.1	36.2		21.6	52.4	25.9		
PHF	.846	.943	.714	.985	.921	.894	.849	.895	.740	.838	.844	.890	.772	.843	.924	.911	.968

Counts Unlimited
PO Box 1178
Corona, CA 92878
(951) 268-6268

City of Azusa
N/S: Azusa Avenue
E/W: First Street
Weather: Clear

File Name : 07_AZU_Azusa_1st PM
Site Code : 05117483
Start Date : 8/22/2017
Page No : 2

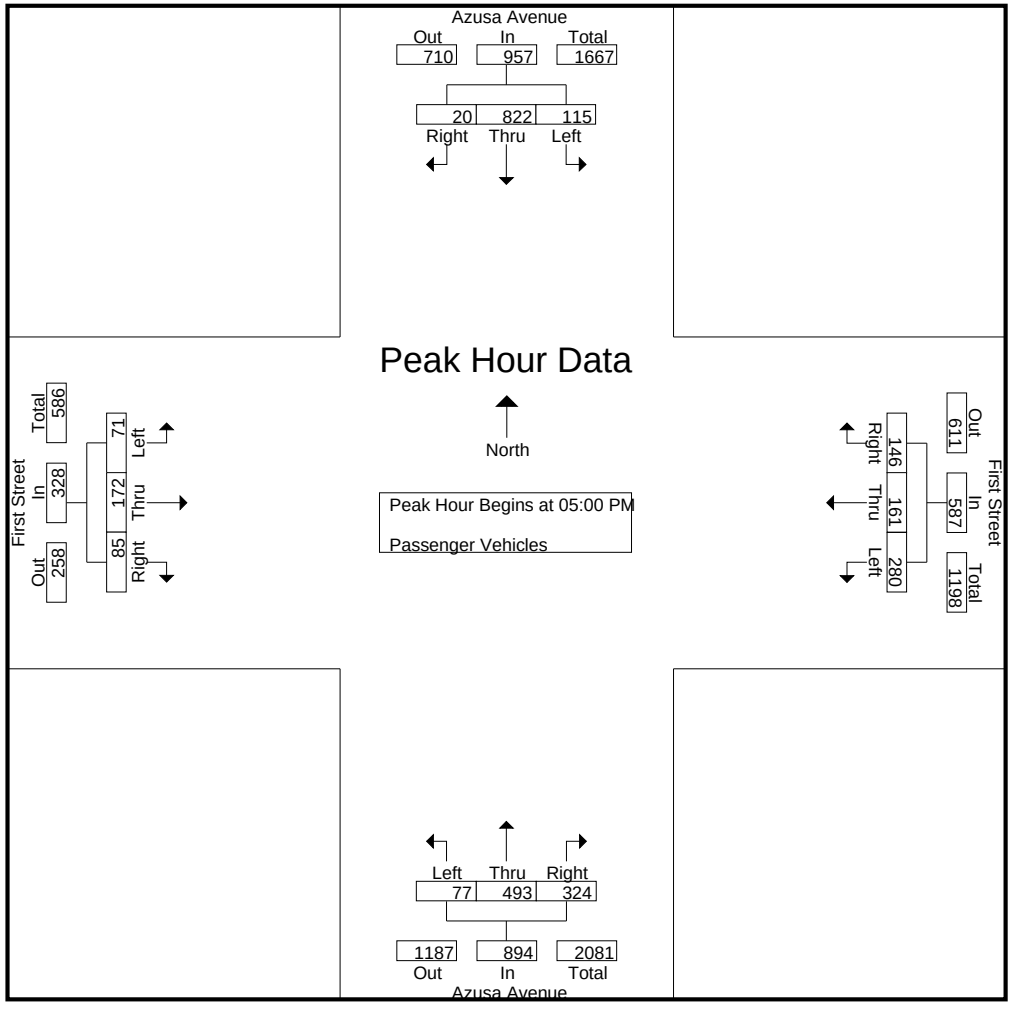

Counts Unlimited
PO Box 1178
Corona, CA 92878
(951) 268-6268

City of Azusa
N/S: Azusa Avenue
E/W: First Street
Weather: Clear

File Name : 07_AZU_Azusa_1st PM
Site Code : 05117483
Start Date : 8/22/2017

	Azusa Avenue Southbound				First Street Westbound				Azusa Avenue Northbound				First Street Eastbound				
Start Time	Left	Thru	Right	App. Total	Left	Thru	Right	App. Total	Left	Thru	Right	App. Total	Left	Thru	Right	App. Total	Int. Total
Peak Hour Analysis From 05:00 PM to 05:45 PM - Peak 1 of 1																	
Peak Hour for Each Approach Begins at:																	
	05:00 PM				05:00 PM				05:00 PM				05:00 PM				
+0 mins.	20	**218**	5	**243**	64	35	35	134	13	100	68	181	18	46	**23**	87	
+15 mins.	**34**	195	4	233	65	36	38	139	**26**	**147**	78	**251**	16	**51**	23	**90**	
+30 mins.	29	203	**7**	239	**76**	**45**	**43**	**164**	20	108	**96**	224	14	31	22	67	
+45 mins.	32	206	4	242	75	45	30	150	18	138	82	238	**23**	44	17	84	
Total Volume	115	822	20	957	280	161	146	587	77	493	324	894	71	172	85	328	
% App. Total	12	85.9	2.1		47.7	27.4	24.9		8.6	55.1	36.2		21.6	52.4	25.9		
PHF	.846	.943	.714	.985	.921	.894	.849	.895	.740	.838	.844	.890	.772	.843	.924	.911	

Counts Unlimited
PO Box 1178
Corona, CA 92878
(951) 268-6268

City of Azusa
N/S: Azusa Avenue
E/W: First Street
Weather: Clear

File Name : 07_AZU_Azusa_1st PM
Site Code : 05117483
Start Date : 8/22/2017
Page No : 1

Groups Printed- Large 2 Axle Vehicles

	Azusa Avenue Southbound					First Street Westbound					Azusa Avenue Northbound					First Street Eastbound							
Start Time	Left	Thru	Right	RTOR	App. Total	Left	Thru	Right	RTOR	App. Total	Left	Thru	Right	RTOR	App. Total	Left	Thru	Right	RTOR	App. Total	Exclu. Total	Inclu. Total	Int. Total
04:00 PM	0	1	0	0	1	2	1	3	2	6	1	5	1	0	7	1	0	0	0	1	2	15	17
04:15 PM	1	7	0	0	8	4	0	0	0	4	0	3	1	1	4	0	1	0	0	1	1	17	18
04:30 PM	1	3	0	0	4	2	2	0	0	4	0	2	2	1	4	0	0	1	0	1	1	13	14
04:45 PM	1	4	0	0	5	0	2	2	0	4	0	2	1	1	3	0	1	0	0	1	1	13	14
Total	3	15	0	0	18	8	5	5	2	18	1	12	5	3	18	1	2	1	0	4	5	58	63
05:00 PM	0	1	0	0	1	1	1	1	1	3	1	2	2	1	5	1	1	0	0	2	2	11	13
05:15 PM	1	1	0	0	2	1	2	0	0	3	0	1	2	1	3	0	1	0	0	1	1	9	10
05:30 PM	0	4	0	0	4	2	0	0	0	2	0	4	0	0	4	0	0	0	0	0	0	10	10
05:45 PM	1	4	0	0	5	0	0	1	0	1	0	3	2	2	5	0	1	0	0	1	2	12	14
Total	2	10	0	0	12	4	3	2	1	9	1	10	6	4	17	1	3	0	0	4	5	42	47
Grand Total	5	25	0	0	30	12	8	7	3	27	2	22	11	7	35	2	5	1	0	8	10	100	110
Apprch %	16.7	83.3	0			44.4	29.6	25.9			5.7	62.9	31.4			25	62.5	12.5					
Total %	5	25	0		30	12	8	7		27	2	22	11		35	2	5	1		8	9.1	90.9	

	Azusa Avenue Southbound				First Street Westbound				Azusa Avenue Northbound				First Street Eastbound				
Start Time	Left	Thru	Right	App. Total	Left	Thru	Right	App. Total	Left	Thru	Right	App. Total	Left	Thru	Right	App. Total	Int. Total
Peak Hour Analysis From 05:00 PM to 05:45 PM - Peak 1 of 1																	
Peak Hour for Entire Intersection Begins at 05:00 PM																	
05:00 PM	0	1	0	1	1	1	**1**	**3**	**1**	2	**2**	**5**	**1**	**1**	0	**2**	11
05:15 PM	**1**	1	0	2	1	**2**	0	3	0	1	2	3	0	1	0	1	9
05:30 PM	0	**4**	0	4	**2**	0	0	2	0	**4**	0	4	0	0	0	0	10
05:45 PM	1	4	0	**5**	0	0	1	1	0	3	2	5	0	1	0	1	**12**
Total Volume	2	10	0	12	4	3	2	9	1	10	6	17	1	3	0	4	42
% App. Total	16.7	83.3	0		44.4	33.3	22.2		5.9	58.8	35.3		25	75	0		
PHF	.500	.625	.000	.600	.500	.375	.500	.750	.250	.625	.750	.850	.250	.750	.000	.500	.875

Counts Unlimited
PO Box 1178
Corona, CA 92878
(951) 268-6268

City of Azusa
N/S: Azusa Avenue
E/W: First Street
Weather: Clear

File Name : 07_AZU_Azusa_1st PM
Site Code : 05117483
Start Date : 8/22/2017
Page No : 2

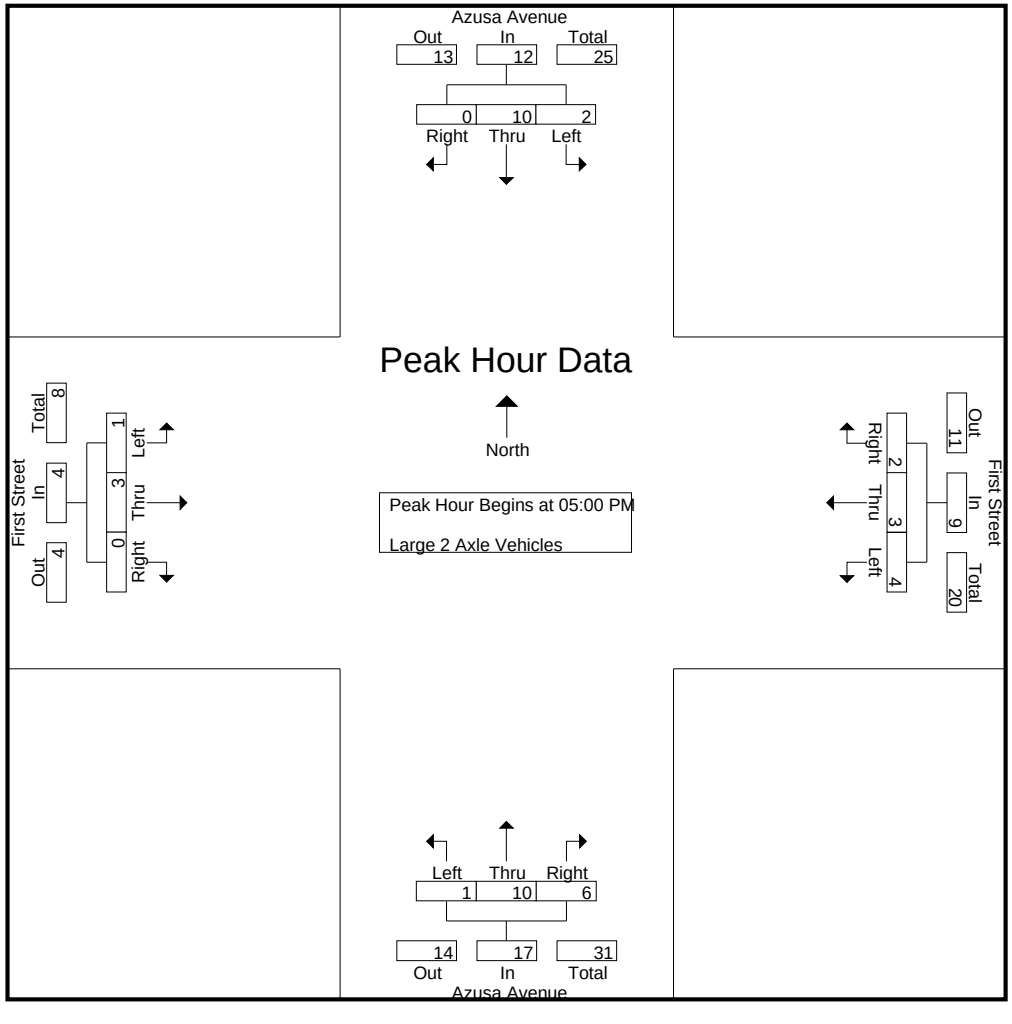

Counts Unlimited
PO Box 1178
Corona, CA 92878
(951) 268-6268

City of Azusa
N/S: Azusa Avenue
E/W: First Street
Weather: Clear

File Name : 07_AZU_Azusa_1st PM
Site Code : 05117483
Start Date : 8/22/2017

	Azusa Avenue Southbound				First Street Westbound				Azusa Avenue Northbound				First Street Eastbound				
Start Time	Left	Thru	Right	App. Total	Left	Thru	Right	App. Total	Left	Thru	Right	App. Total	Left	Thru	Right	App. Total	Int. Total
Peak Hour Analysis From 05:00 PM to 05:45 PM - Peak 1 of 1																	
Peak Hour for Each Approach Begins at:																	
	05:00 PM				05:00 PM				05:00 PM				05:00 PM				
+0 mins.	0	1	0	1	1	1	**1**	**3**	**1**	2	**2**	**5**	**1**	**1**	0	**2**	
+15 mins.	**1**	1	0	2	1	**2**	0	3	0	1	2	3	0	1	0	1	
+30 mins.	0	**4**	0	4	**2**	0	0	2	0	**4**	0	4	0	0	0	0	
+45 mins.	1	4	0	**5**	0	0	1	1	0	3	2	5	0	1	0	1	
Total Volume	2	10	0	12	4	3	2	9	1	10	6	17	1	3	0	4	
% App. Total	16.7	83.3	0		44.4	33.3	22.2		5.9	58.8	35.3		25	75	0		
PHF	.500	.625	.000	.600	.500	.375	.500	.750	.250	.625	.750	.850	.250	.750	.000	.500	

Counts Unlimited
PO Box 1178
Corona, CA 92878
(951) 268-6268

City of Azusa
N/S: Azusa Avenue
E/W: First Street
Weather: Clear

File Name : 07_AZU_Azusa_1st PM
Site Code : 05117483
Start Date : 8/22/2017
Page No : 1

Groups Printed- 3 Axle Vehicles

	Azusa Avenue Southbound					First Street Westbound					Azusa Avenue Northbound					First Street Eastbound							
Start Time	Left	Thru	Right	RTOR	App. Total	Left	Thru	Right	RTOR	App. Total	Left	Thru	Right	RTOR	App. Total	Left	Thru	Right	RTOR	App. Total	Exclu. Total	Inclu. Total	Int. Total
04:00 PM	0	2	0	0	2	0	0	0	0	0	0	0	0	0	0	0	0	0	0	0	0	2	2
04:15 PM	0	0	0	0	0	0	0	0	0	0	0	2	0	0	2	0	0	0	0	0	0	2	2
04:30 PM	1	0	0	0	1	0	0	0	0	0	0	0	0	0	0	0	0	0	0	0	0	1	1
04:45 PM	0	0	0	0	0	0	0	0	0	0	0	0	0	0	0	0	0	0	0	0	0	0	0
Total	1	2	0	0	3	0	0	0	0	0	0	2	0	0	2	0	0	0	0	0	0	5	5
05:00 PM	0	2	0	0	2	1	0	0	0	1	0	1	0	0	1	0	0	0	0	0	0	4	4
05:15 PM	0	0	0	0	0	0	0	0	0	0	0	0	0	0	0	0	0	0	0	0	0	0	0
05:30 PM	0	0	0	0	0	0	0	0	0	0	0	0	0	0	0	0	0	0	0	0	0	0	0
05:45 PM	0	0	0	0	0	0	0	0	0	0	0	0	0	0	0	0	0	0	0	0	0	0	0
Total	0	2	0	0	2	1	0	0	0	1	0	1	0	0	1	0	0	0	0	0	0	4	4
Grand Total	1	4	0	0	5	1	0	0	0	1	0	3	0	0	3	0	0	0	0	0	0	9	9
Apprch %	20	80	0			100	0	0			0	100	0			0	0	0					
Total %	11.1	44.4	0		55.6	11.1	0	0		11.1	0	33.3	0		33.3	0	0	0		0	0	100	

	Azusa Avenue Southbound				First Street Westbound				Azusa Avenue Northbound				First Street Eastbound				
Start Time	Left	Thru	Right	App. Total	Left	Thru	Right	App. Total	Left	Thru	Right	App. Total	Left	Thru	Right	App. Total	Int. Total
Peak Hour Analysis From 05:00 PM to 05:45 PM - Peak 1 of 1																	
Peak Hour for Entire Intersection Begins at 05:00 PM																	
05:00 PM	0	**2**	0	**2**	**1**	0	0	**1**	0	**1**	0	**1**	0	0	0	0	**4**
05:15 PM	0	0	0	0	0	0	0	0	0	0	0	0	0	0	0	0	0
05:30 PM	0	0	0	0	0	0	0	0	0	0	0	0	0	0	0	0	0
05:45 PM	0	0	0	0	0	0	0	0	0	0	0	0	0	0	0	0	0
Total Volume	0	2	0	2	1	0	0	1	0	1	0	1	0	0	0	0	4
% App. Total	0	100	0		100	0	0		0	100	0		0	0	0		
PHF	.000	.250	.000	.250	.250	.000	.000	.250	.000	.250	.000	.250	.000	.000	.000	.000	.250

Counts Unlimited
PO Box 1178
Corona, CA 92878
(951) 268-6268

City of Azusa
N/S: Azusa Avenue
E/W: First Street
Weather: Clear

File Name : 07_AZU_Azusa_1st PM
Site Code : 05117483
Start Date : 8/22/2017
Page No : 2

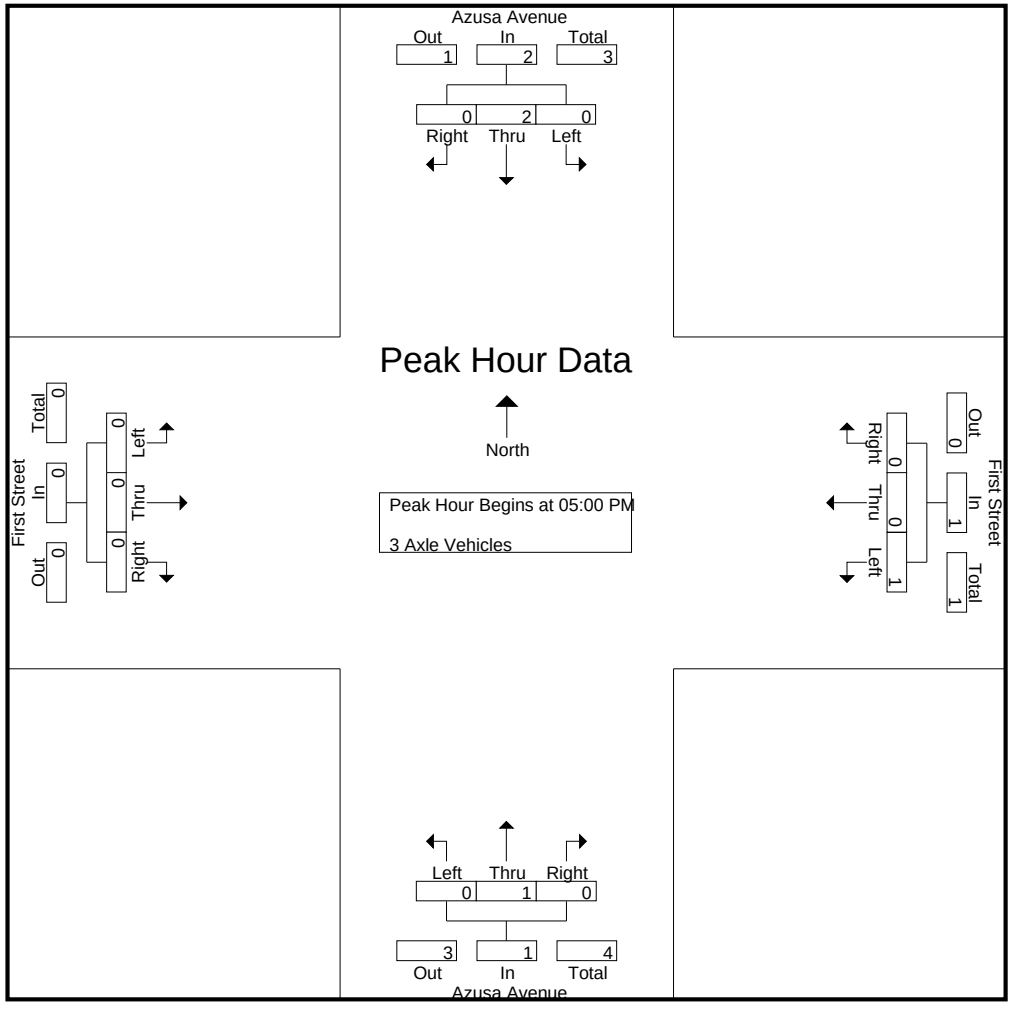

Counts Unlimited
PO Box 1178
Corona, CA 92878
(951) 268-6268

City of Azusa
N/S: Azusa Avenue
E/W: First Street
Weather: Clear

File Name : 07_AZU_Azusa_1st PM
Site Code : 05117483
Start Date : 8/22/2017

	Azusa Avenue Southbound				First Street Westbound				Azusa Avenue Northbound				First Street Eastbound				
Start Time	Left	Thru	Right	App. Total	Left	Thru	Right	App. Total	Left	Thru	Right	App. Total	Left	Thru	Right	App. Total	Int. Total
Peak Hour Analysis From 05:00 PM to 05:45 PM - Peak 1 of 1																	
Peak Hour for Each Approach Begins at:																	
	05:00 PM				05:00 PM				05:00 PM				05:00 PM				
+0 mins.	0	**2**	0	**2**	**1**	0	0	**1**	0	**1**	0	**1**	0	0	0	0	
+15 mins.	0	0	0	0	0	0	0	0	0	0	0	0	0	0	0	0	
+30 mins.	0	0	0	0	0	0	0	0	0	0	0	0	0	0	0	0	
+45 mins.	0	0	0	0	0	0	0	0	0	0	0	0	0	0	0	0	
Total Volume	0	2	0	2	1	0	0	1	0	1	0	1	0	0	0	0	
% App. Total	0	100	0		100	0	0		0	100	0		0	0	0		
PHF	.000	.250	.000	.250	.250	.000	.000	.250	.000	.250	.000	.250	.000	.000	.000	.000	

Counts Unlimited
PO Box 1178
Corona, CA 92878
(951) 268-6268

City of Azusa
N/S: Azusa Avenue
E/W: First Street
Weather: Clear

File Name : 07_AZU_Azusa_1st PM
Site Code : 05117483
Start Date : 8/22/2017
Page No : 1

Groups Printed- 4+ Axle Trucks

	Azusa Avenue Southbound					First Street Westbound					Azusa Avenue Northbound					First Street Eastbound							
Start Time	Left	Thru	Right	RTOR	App. Total	Left	Thru	Right	RTOR	App. Total	Left	Thru	Right	RTOR	App. Total	Left	Thru	Right	RTOR	App. Total	Exclu. Total	Inclu. Total	Int. Total
04:00 PM	0	1	0	0	1	2	0	1	0	3	0	0	1	0	1	0	0	1	0	1	0	6	6
04:15 PM	0	0	0	0	0	2	0	0	0	2	0	0	0	0	0	0	0	0	0	0	0	2	2
04:30 PM	0	1	0	0	1	0	0	2	1	2	0	0	0	0	0	0	0	0	0	0	1	3	4
04:45 PM	0	0	0	0	0	0	0	1	1	1	0	1	0	0	1	0	0	0	0	0	1	2	3
Total	0	2	0	0	2	4	0	4	2	8	0	1	1	0	2	0	0	1	0	1	2	13	15
05:00 PM	0	0	0	0	0	0	0	0	0	0	0	0	0	0	0	0	0	0	0	0	0	0	0
05:15 PM	0	1	0	0	1	1	0	0	0	1	0	0	0	0	0	0	0	0	0	0	0	2	2
05:30 PM	0	2	0	0	2	2	0	0	0	2	0	0	0	0	0	0	0	0	0	0	0	4	4
05:45 PM	0	0	0	0	0	0	0	0	0	0	0	1	0	0	1	0	0	0	0	0	0	1	1
Total	0	3	0	0	3	3	0	0	0	3	0	1	0	0	1	0	0	0	0	0	0	7	7
Grand Total	0	5	0	0	5	7	0	4	2	11	0	2	1	0	3	0	0	1	0	1	2	20	22
Apprch %	0	100	0			63.6	0	36.4			0	66.7	33.3			0	0	100					
Total %	0	25	0		25	35	0	20		55	0	10	5		15	0	0	5		5	9.1	90.9	

	Azusa Avenue Southbound				First Street Westbound				Azusa Avenue Northbound				First Street Eastbound				
Start Time	Left	Thru	Right	App. Total	Left	Thru	Right	App. Total	Left	Thru	Right	App. Total	Left	Thru	Right	App. Total	Int. Total
Peak Hour Analysis From 05:00 PM to 05:45 PM - Peak 1 of 1																	
Peak Hour for Entire Intersection Begins at 05:00 PM																	
05:00 PM	0	0	0	0	0	0	0	0	0	0	0	0	0	0	0	0	0
05:15 PM	0	1	0	1	1	0	0	1	0	0	0	0	0	0	0	0	2
05:30 PM	0	**2**	0	**2**	**2**	0	0	**2**	0	0	0	0	0	0	0	0	**4**
05:45 PM	0	0	0	0	0	0	0	0	0	**1**	0	**1**	0	0	0	0	1
Total Volume	0	3	0	3	3	0	0	3	0	1	0	1	0	0	0	0	7
% App. Total	0	100	0		100	0	0		0	100	0		0	0	0		
PHF	.000	.375	.000	.375	.375	.000	.000	.375	.000	.250	.000	.250	.000	.000	.000	.000	.438

Counts Unlimited
PO Box 1178
Corona, CA 92878
(951) 268-6268

City of Azusa
N/S: Azusa Avenue
E/W: First Street
Weather: Clear

File Name : 07_AZU_Azusa_1st PM
Site Code : 05117483
Start Date : 8/22/2017
Page No : 2

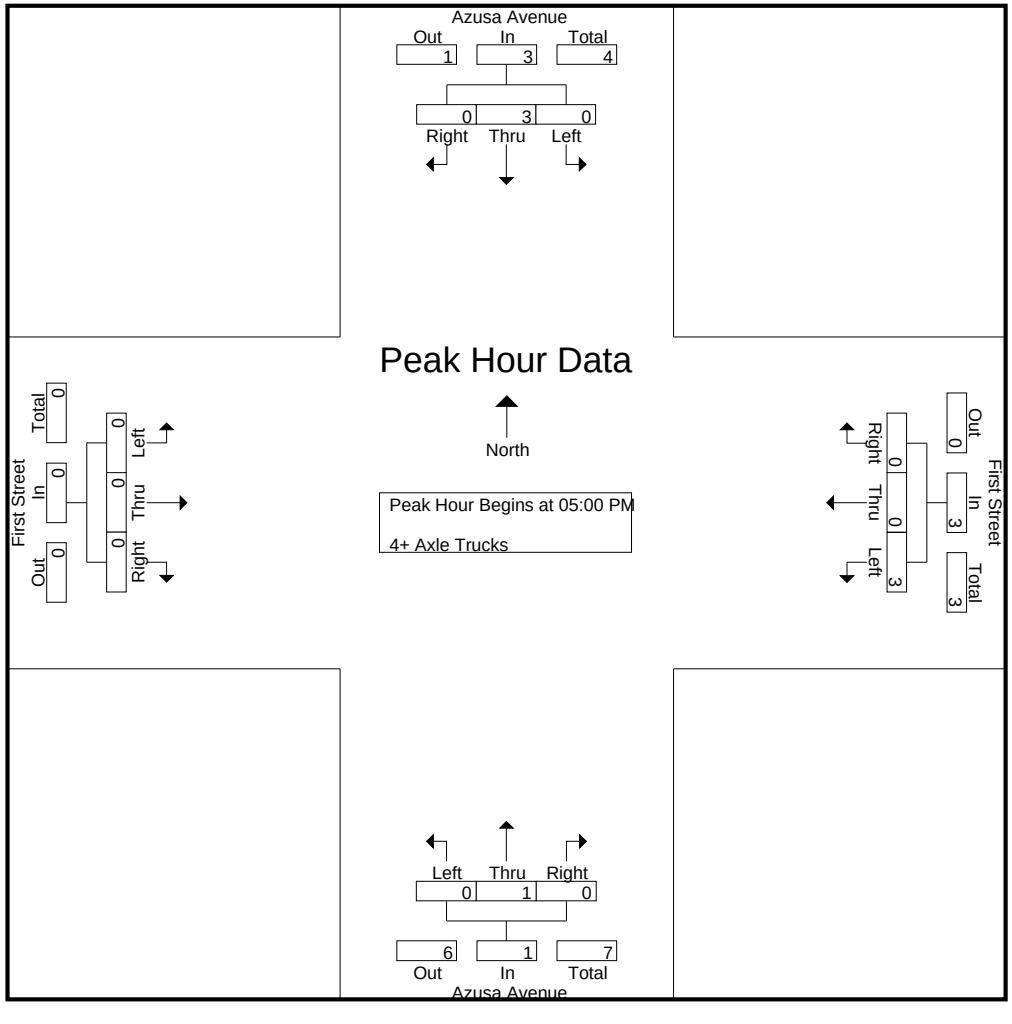

Counts Unlimited
PO Box 1178
Corona, CA 92878
(951) 268-6268

City of Azusa
N/S: Azusa Avenue
E/W: First Street
Weather: Clear

File Name : 07_AZU_Azusa_1st PM
Site Code : 05117483
Start Date : 8/22/2017

	Azusa Avenue Southbound				First Street Westbound				Azusa Avenue Northbound				First Street Eastbound				
Start Time	Left	Thru	Right	App. Total	Left	Thru	Right	App. Total	Left	Thru	Right	App. Total	Left	Thru	Right	App. Total	Int. Total
Peak Hour Analysis From 05:00 PM to 05:45 PM - Peak 1 of 1																	
Peak Hour for Each Approach Begins at:																	
	05:00 PM				05:00 PM				05:00 PM				05:00 PM				
+0 mins.	0	0	0	0	0	0	0	0	0	0	0	0	0	0	0	0	
+15 mins.	0	1	0	1	1	0	0	1	0	0	0	0	0	0	0	0	
+30 mins.	0	**2**	0	**2**	**2**	0	0	**2**	0	0	0	0	0	0	0	0	
+45 mins.	0	0	0	0	0	0	0	0	0	**1**	0	**1**	0	0	0	0	
Total Volume	0	3	0	3	3	0	0	3	0	1	0	1	0	0	0	0	
% App. Total	0	100	0		100	0	0		0	100	0		0	0	0		
PHF	.000	.375	.000	.375	.375	.000	.000	.375	.000	.250	.000	.250	.000	.000	.000	.000	

Counts Unlimited
PO Box 1178
Corona, CA 92878
(951) 268-6268

City of Azusa
N/S: Alameda Ave/I-210 Westbound Ramps
E/W: 1st Street
Weather: Clear

File Name : AZU_Alameda_210W_1st AM
Site Code : 22519060
Start Date : 1/24/2019
Page No : 1

Groups Printed- Total Volume

	Alameda Avenue Southbound				1st Street Westbound				I-210 Westbound Ramps Northbound				1st Street Eastbound				
Start Time	Left	Thru	Right	App. Total	Left	Thru	Right	App. Total	Left	Thru	Right	App. Total	Left	Thru	Right	App. Total	Int. Total
07:00 AM	9	35	14	58	183	115	11	309	16	1	3	20	2	35	130	167	554
07:15 AM	9	33	19	61	137	108	11	256	22	1	3	26	4	41	77	122	465
07:30 AM	10	20	20	50	154	113	4	271	44	2	0	46	0	59	93	152	519
07:45 AM	13	24	11	48	106	129	18	253	29	10	1	40	2	104	88	194	535
Total	41	112	64	217	580	465	44	1089	111	14	7	132	8	239	388	635	2073
08:00 AM	10	19	18	47	113	123	13	249	36	8	3	47	0	83	83	166	509
08:15 AM	2	10	9	21	123	78	6	207	40	11	2	53	7	76	83	166	447
08:30 AM	4	6	11	21	109	74	2	185	42	10	0	52	3	47	66	116	374
08:45 AM	9	10	10	29	128	75	6	209	37	2	1	40	4	34	75	113	391
Total	25	45	48	118	473	350	27	850	155	31	6	192	14	240	307	561	1721
Grand Total	66	157	112	335	1053	815	71	1939	266	45	13	324	22	479	695	1196	3794
Apprch %	19.7	46.9	33.4		54.3	42	3.7		82.1	13.9	4		1.8	40.1	58.1		
Total %	1.7	4.1	3	8.8	27.8	21.5	1.9	51.1	7	1.2	0.3	8.5	0.6	12.6	18.3	31.5	

	Alameda Avenue Southbound				1st Street Westbound				I-210 Westbound Ramps Northbound				1st Street Eastbound				
Start Time	Left	Thru	Right	App. Total	Left	Thru	Right	App. Total	Left	Thru	Right	App. Total	Left	Thru	Right	App. Total	Int. Total
Peak Hour Analysis From 07:00 AM to 08:45 AM - Peak 1 of 1																	
Peak Hour for Entire Intersection Begins at 07:00 AM																	
07:00 AM	9	**35**	14	58	**183**	115	11	**309**	16	1	**3**	20	2	35	**130**	167	**554**
07:15 AM	9	33	19	**61**	137	108	11	256	22	1	3	26	**4**	41	77	122	465
07:30 AM	10	20	**20**	50	154	113	4	271	**44**	2	0	**46**	0	59	93	152	519
07:45 AM	**13**	24	11	48	106	**129**	**18**	253	29	**10**	1	40	2	**104**	88	**194**	535
Total Volume	41	112	64	217	580	465	44	1089	111	14	7	132	8	239	388	635	2073
% App. Total	18.9	51.6	29.5		53.3	42.7	4		84.1	10.6	5.3		1.3	37.6	61.1		
PHF	.788	.800	.800	.889	.792	.901	.611	.881	.631	.350	.583	.717	.500	.575	.746	.818	.935

Counts Unlimited
PO Box 1178
Corona, CA 92878
(951) 268-6268

City of Azusa
N/S: Alameda Ave/I-210 Westbound Ramps
E/W: 1st Street
Weather: Clear

File Name : AZU_Alameda_210W_1st AM
Site Code : 22519060
Start Date : 1/24/2019
Page No : 2

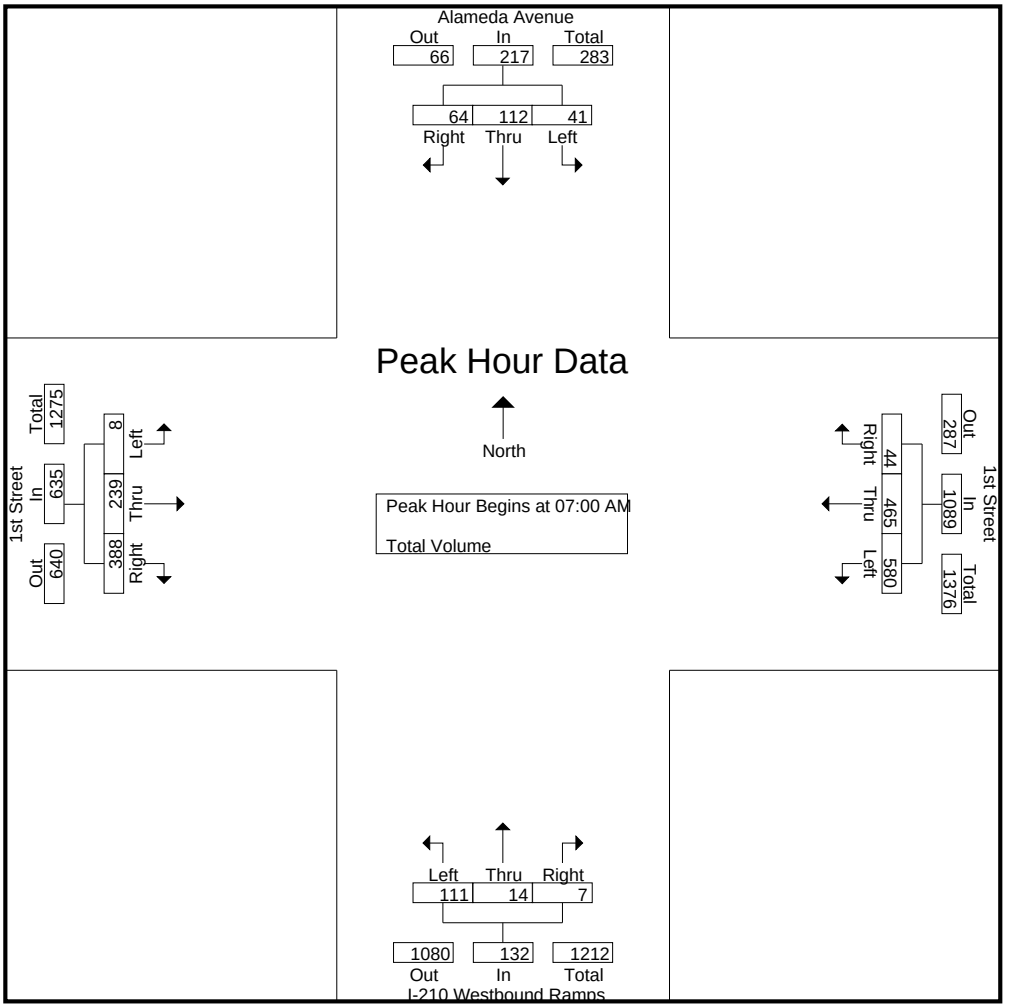

Peak Hour Analysis From 07:00 AM to 08:45 AM - Peak 1 of 1
Peak Hour for Each Approach Begins at:

	07:00 AM				07:00 AM				07:45 AM				07:30 AM			
+0 mins.	9	**35**	14	58	**183**	115	11	**309**	29	10	1	40	0	59	**93**	152
+15 mins.	9	33	19	**61**	137	108	11	256	36	8	**3**	47	2	**104**	88	**194**
+30 mins.	10	20	**20**	50	154	113	4	271	40	**11**	2	**53**	0	83	83	166
+45 mins.	**13**	24	11	48	106	**129**	**18**	253	**42**	10	0	52	**7**	76	83	166
Total Volume	41	112	64	217	580	465	44	1089	147	39	6	192	9	322	347	678
% App. Total	18.9	51.6	29.5		53.3	42.7	4		76.6	20.3	3.1		1.3	47.5	51.2	
PHF	.788	.800	.800	.889	.792	.901	.611	.881	.875	.886	.500	.906	.321	.774	.933	.874

Counts Unlimited
PO Box 1178
Corona, CA 92878
(951) 268-6268

City of Azusa
N/S: Alameda Ave/I-210 Westbound Ramps
E/W: 1st Street
Weather: Clear

File Name : AZU_Alameda_210W_1st PM
Site Code : 22519060
Start Date : 1/24/2019
Page No : 1

Groups Printed- Total Volume

	Alameda Avenue Southbound				1st Street Westbound				I-210 Westbound Ramps Northbound				1st Street Eastbound				
Start Time	Left	Thru	Right	App. Total	Left	Thru	Right	App. Total	Left	Thru	Right	App. Total	Left	Thru	Right	App. Total	Int. Total
04:00 PM	12	9	13	34	49	67	4	120	78	25	18	121	12	108	56	176	451
04:15 PM	6	7	10	23	52	59	10	121	81	16	22	119	1	123	42	166	429
04:30 PM	13	11	20	44	45	62	7	114	73	27	14	114	5	91	48	144	416
04:45 PM	10	4	5	19	38	71	11	120	89	19	29	137	2	136	51	189	465
Total	41	31	48	120	184	259	32	475	321	87	83	491	20	458	197	675	1761
05:00 PM	12	10	12	34	44	71	7	122	95	30	25	150	0	168	43	211	517
05:15 PM	14	5	9	28	55	83	16	154	88	17	22	127	9	160	57	226	535
05:30 PM	10	5	12	27	40	80	9	129	94	21	18	133	9	140	56	205	494
05:45 PM	8	5	16	29	45	64	4	113	81	22	16	119	6	118	52	176	437
Total	44	25	49	118	184	298	36	518	358	90	81	529	24	586	208	818	1983
Grand Total	85	56	97	238	368	557	68	993	679	177	164	1020	44	1044	405	1493	3744
Apprch %	35.7	23.5	40.8		37.1	56.1	6.8		66.6	17.4	16.1		2.9	69.9	27.1		
Total %	2.3	1.5	2.6	6.4	9.8	14.9	1.8	26.5	18.1	4.7	4.4	27.2	1.2	27.9	10.8	39.9	

	Alameda Avenue Southbound				1st Street Westbound				I-210 Westbound Ramps Northbound				1st Street Eastbound				
Start Time	Left	Thru	Right	App. Total	Left	Thru	Right	App. Total	Left	Thru	Right	App. Total	Left	Thru	Right	App. Total	Int. Total
Peak Hour Analysis From 04:00 PM to 05:45 PM - Peak 1 of 1																	
Peak Hour for Entire Intersection Begins at 04:45 PM																	
04:45 PM	10	4	5	19	38	71	11	120	89	19	**29**	137	2	136	51	189	465
05:00 PM	12	**10**	**12**	**34**	44	71	7	122	**95**	**30**	25	**150**	0	**168**	43	211	517
05:15 PM	**14**	5	9	28	**55**	**83**	**16**	**154**	88	17	22	127	**9**	160	**57**	**226**	**535**
05:30 PM	10	5	12	27	40	80	9	129	94	21	18	133	9	140	56	205	494
Total Volume	46	24	38	108	177	305	43	525	366	87	94	547	20	604	207	831	2011
% App. Total	42.6	22.2	35.2		33.7	58.1	8.2		66.9	15.9	17.2		2.4	72.7	24.9		
PHF	.821	.600	.792	.794	.805	.919	.672	.852	.963	.725	.810	.912	.556	.899	.908	.919	.940

AimTD LLC

TURNING MOVEMENT COUNTS

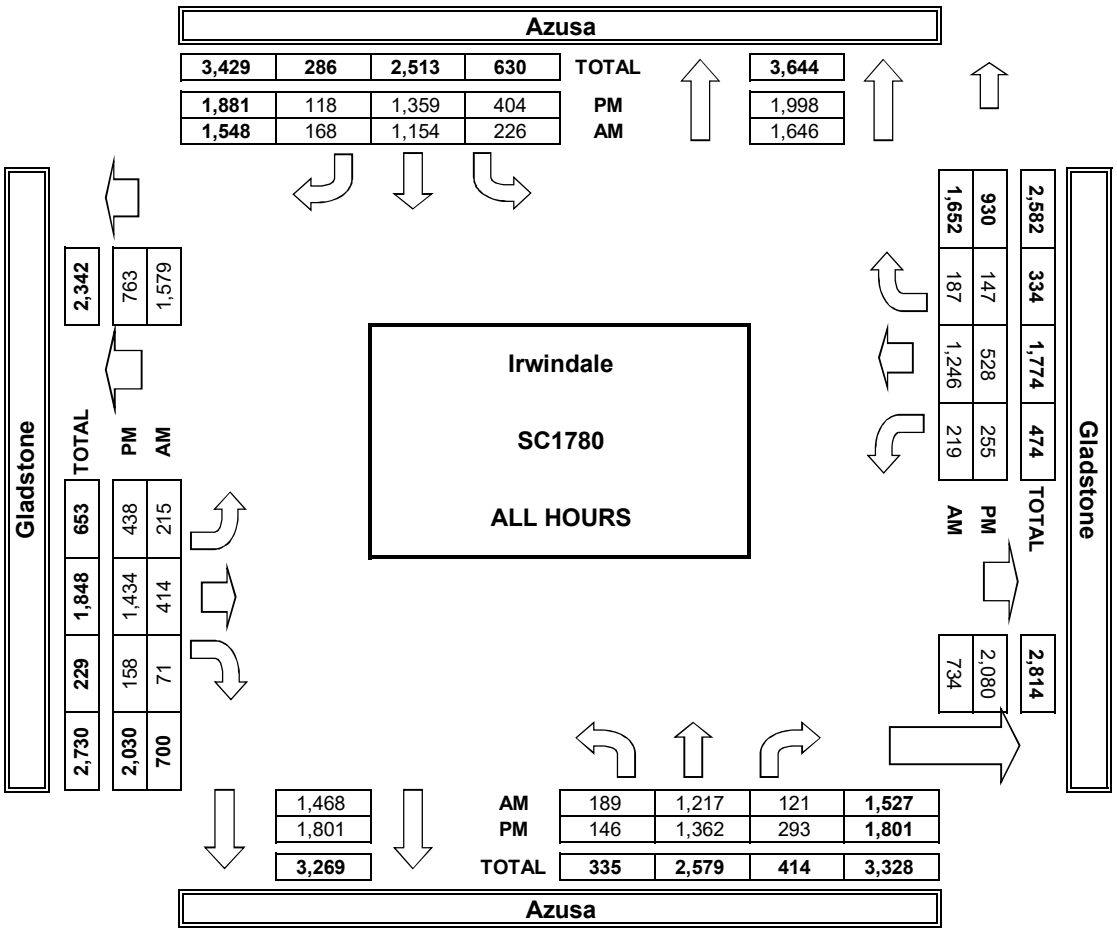

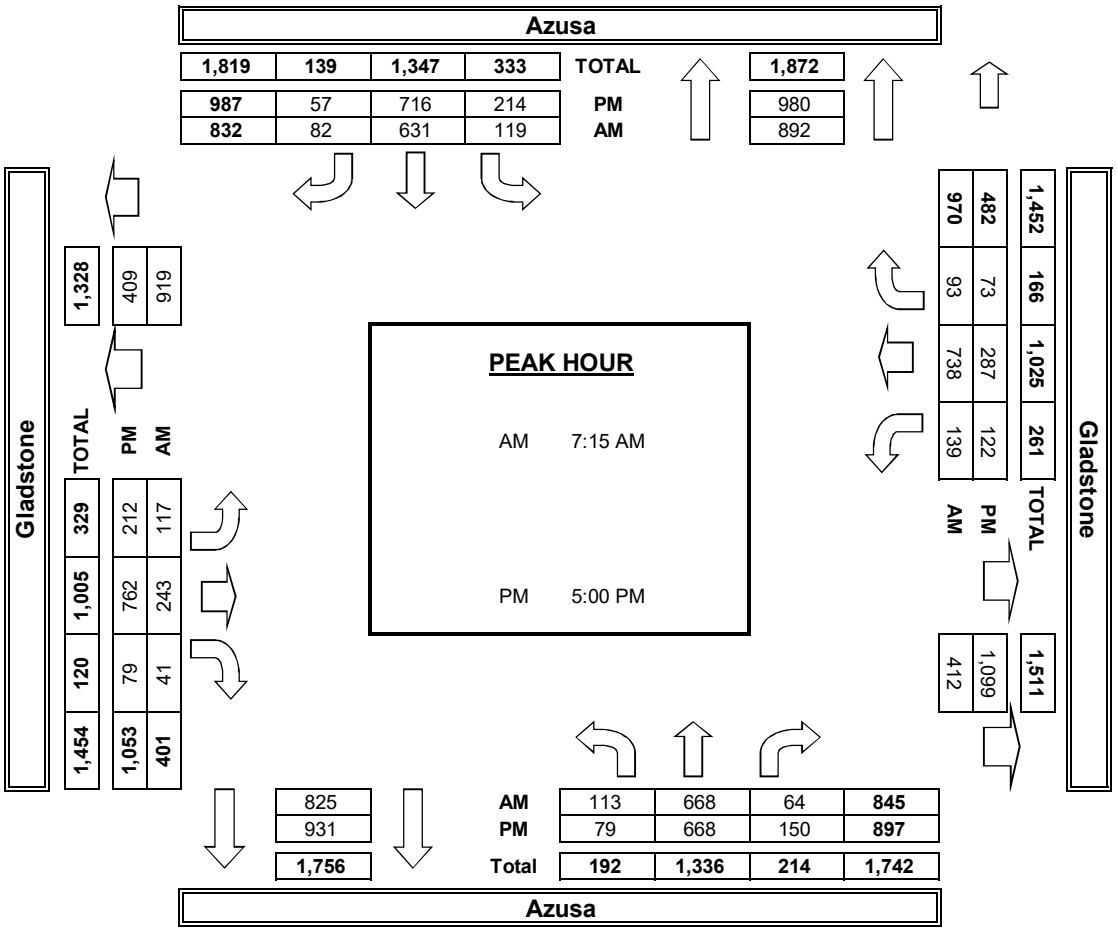

Counts Unlimited
PO Box 1178
Corona, CA 92878
(951) 268-6268

City of Azusa
N/S: Alameda Ave/I-210 Westbound Ramps
E/W: 1st Street
Weather: Clear

File Name : AZU_Alameda_210W_1st PM
Site Code : 22519060
Start Date : 1/24/2019
Page No : 2

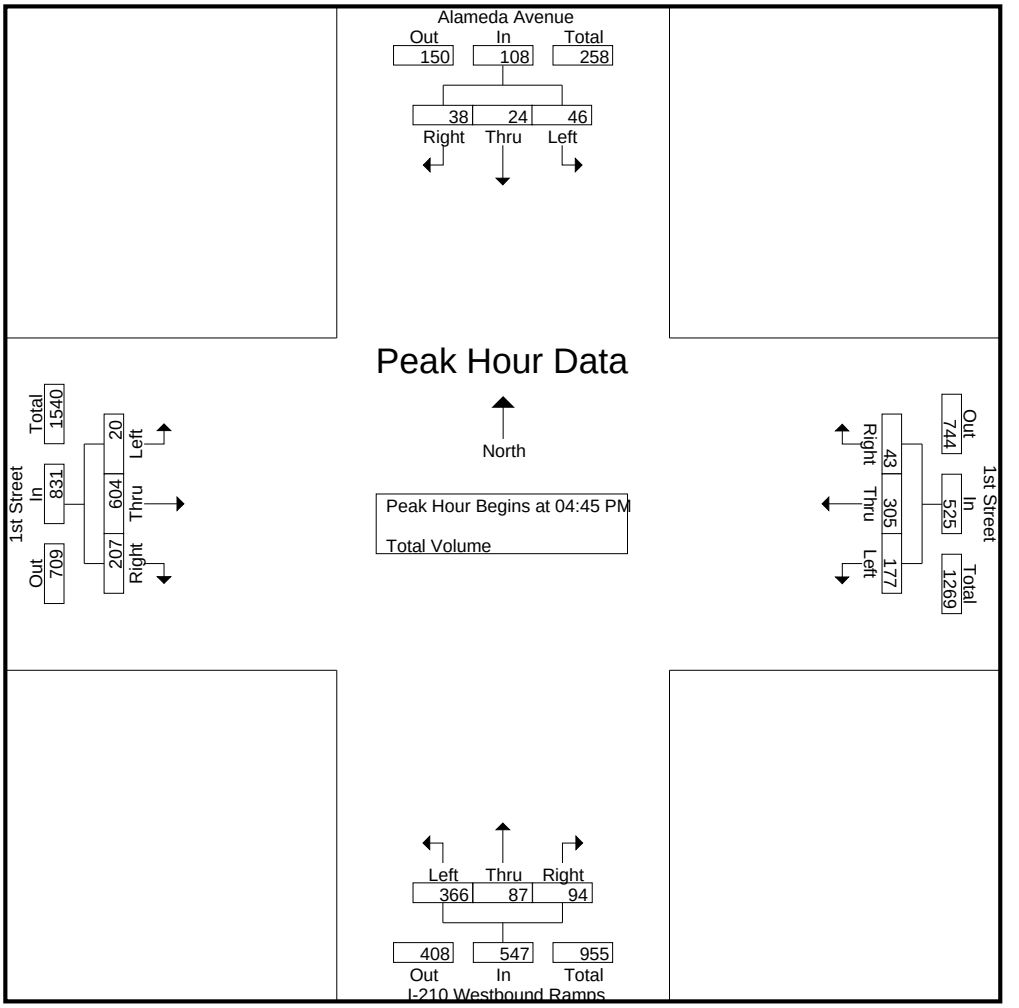

Peak Hour Analysis From 04:00 PM to 05:45 PM - Peak 1 of 1
Peak Hour for Each Approach Begins at:

	04:30 PM				04:45 PM				04:45 PM				04:45 PM			
+0 mins.	13	**11**	**20**	**44**	38	71	11	120	89	19	**29**	137	2	136	51	189
+15 mins.	10	4	5	19	44	71	7	122	**95**	**30**	25	**150**	0	**168**	43	211
+30 mins.	12	10	12	34	**55**	**83**	**16**	**154**	88	17	22	127	**9**	160	**57**	**226**
+45 mins.	**14**	5	9	28	40	80	9	129	94	21	18	133	9	140	56	205
Total Volume	49	30	46	125	177	305	43	525	366	87	94	547	20	604	207	831
% App. Total	39.2	24	36.8		33.7	58.1	8.2		66.9	15.9	17.2		2.4	72.7	24.9	
PHF	.875	.682	.575	.710	.805	.919	.672	.852	.963	.725	.810	.912	.556	.899	.908	.919

APPENDIX C

LEVEL OF SERVICE WORKSHEETS

EXISTING

Vincent Avenue Industrial Building

Vistro File: G:\...\AM.vistro
Report File: G:\...\E AM.pdf

Scenario 1 Existing
5/4/2020

Intersection Analysis Summary

ID	Intersection Name	Control Type	Method	Worst Mvmt	V/C	Delay (s/veh)	LOS
1	I-605 SB On Ramp (NS) at Live Oak Avenue (EW)	Signalized	ICU 1	WB Thru	0.513	-	A
2	I-605 NB Ramps (NS) at Live Oak Avenue (EW)	Two-way stop	HCM 6th Edition	SB Right	0.976	67.9	F
3	Graham Road (NS) at Live Oak Avenue (EW)	Signalized	ICU 1	WB Thru	0.565	-	A
4	Rivergrade Road (NS) at Live Oak Avenue (EW)	Signalized	ICU 1	WB Thru	0.581	-	A
5	Stewart Avenue (NS) at Live Oak Avenue (EW)	Signalized	ICU 1	WB Thru	0.804	-	D
6	Baldwin Park Boulevard (NS) at Live Oak Avenue (EW)	Signalized	ICU 1	WB Thru	0.595	-	A
7	Arrow Highway (NS) at Live Oak Ave/Arrow Hwy (EW)	Signalized	ICU 1	WB Thru	0.622	-	B
8	Maine Avenue (NS) at Arrow Highway (EW)	Signalized	ICU 1	WB Thru	0.787	-	C
9	Santa Fe Dam/Azusa Canyon Road (NS) at Arrow Highway (EW)	Signalized	ICU 1	WB Thru	0.921	-	E
10	4th Street (NS) at Arrow Highway (EW)	Signalized	ICU 1	EB Thru	0.343	-	A
11	Irwindale Avenue (NS) at I-210 WB Ramps (EW)	Signalized	ICU 1	SB Thru	0.459	-	A
12	Irwindale Avenue (NS) at I-210 EB Ramps (EW)	Signalized	ICU 1	NB Thru	0.665	-	B
13	Irwindale Avenue (NS) at Jardin De Roca/Irwindale Rd (EW)	Signalized	ICU 1	SB Thru	0.565	-	A
14	Irwindale Avenue (NS) at 1st Street (EW)	Signalized	ICU 1	NB Thru	0.503	-	A
15	Irwindale Avenue (NS) at Gladstone Street (EW)	Signalized	ICU 1	WB Left	0.644	-	B
16	Irwindale Avenue (NS) at Arrow Highway (EW)	Signalized	ICU 1	WB Thru	0.840	-	D
17	Vincent Avenue (NS) at	Signalized	ICU 1	WB Right	0.521		A

17	Gladstone Street (EW)	Signalized	ICU 1	WB Right	0.521	-	A
18	Vincent Avenue (NS) at Arrow Highway (EW)	Signalized	ICU 1	WB Thru	0.676	-	B
21	Vincent Avenue (NS) at Cypress Street (EW)	Signalized	ICU 1	WB Right	0.641	-	B
22	Vincent Avenue (NS) at San Bernardino Road (EW)	Signalized	ICU 1	WB Thru	0.650	-	B
23	Vincent Avenue (NS) at Badillo Street (EW)	Signalized	ICU 1	WB Thru	0.607	-	B
24	Vincent Avenue (NS) at Puente Avenue (EW)	Signalized	ICU 1	NB Thru	0.576	-	A
25	Vincent Avenue (NS) at Rowland Avenue (EW)	Signalized	ICU 1	SB Thru	0.535	-	A
26	Vincent Avenue (NS) at Workman Avenue (EW)	Signalized	ICU 1	SB Thru	0.609	-	B
27	Vincent Avenue (NS) at I-10 WB Ramps (EW)	Signalized	ICU 1	SB Thru	0.433	-	A
28	Vincent Avenue (NS) at I-10 EB Ramps (EW)	Signalized	ICU 1	NB Thru	0.482	-	A
29	Vernon Ave/Lark Ellen Ave (NS) at Gladstone Street (EW)	Signalized	ICU 1	WB Thru	0.681	-	B
30	Azusa Avenue (NS) at I-210 EB Ramps (EW)	Signalized	ICU 1	NB Thru	0.659	-	B
31	Azusa Avenue (NS) at Paramount Street (EW)	Signalized	ICU 1	NB Thru	0.587	-	A
32	Azusa Avenue (NS) at Gladstone Street (EW)	Signalized	ICU 1	WB Thru	0.726	-	C
33	San Gabriel Ave/Azusa Ave (NS) at 1st St (EW)	Signalized	ICU 1	SB Thru	0.663	-	B
34	Alameda Ave/I-210 WB Ramps NS) at 1st St (EW)	Signalized	ICU 1	WB Left	0.896	-	D

V/C, Delay, LOS: For two-way stop, these values are taken from the movement with the worst (highest) delay value. For all other control types, they are taken for the whole intersection.

Intersection Level Of Service Report
Intersection 1: I-605 SB On Ramp (NS) at Live Oak Avenue (EW)

Control Type:	Signalized	Delay (sec / veh):	-
Analysis Method:	ICU 1	Level Of Service:	A
Analysis Period:	15 minutes	Volume to Capacity (v/c):	0.513

Intersection Setup

Name	I-605 SB On Ramps				Live Oak Avenue	
Approach	Northbound		Eastbound		Westbound	
Lane Configuration						
Turning Movement	Left	Right	Thru	Right	Left	Thru
Lane Width [ft]	12.00	12.00	12.00	12.00	12.00	12.00
No. of Lanes in Pocket	0	0	0	0	1	0
Pocket Length [ft]	100.00	100.00	100.00	100.00	365.00	100.00
Speed [mph]	35.00		35.00		45.00	
Grade [%]	0.00		0.00		0.00	
Crosswalk	Yes		No		No	

Volumes

Name	I-605 SB On Ramps				Live Oak Avenue	
Base Volume Input [veh/h]	0	0	280	347	521	1094
Base Volume Adjustment Factor	1.0000	1.0000	1.0000	0.0000	1.0000	1.0000
Heavy Vehicles Percentage [%]	2.00	2.00	2.00	2.00	2.00	2.00
Growth Rate	1.00	1.00	1.00	1.00	1.00	1.00
In-Process Volume [veh/h]	0	0	0	0	0	0
Site-Generated Trips [veh/h]	0	0	0	0	0	0
Diverted Trips [veh/h]	0	0	0	0	0	0
Pass-by Trips [veh/h]	0	0	0	0	0	0
Existing Site Adjustment Volume [veh/h]	0	0	0	0	0	0
Other Volume [veh/h]	0	0	0	0	0	0
Total Hourly Volume [veh/h]	0	0	280	0	521	1094
Peak Hour Factor	1.0000	1.0000	1.0000	1.0000	1.0000	1.0000
Other Adjustment Factor	1.0000	1.0000	1.0000	0.0000	1.0000	1.0000
Total 15-Minute Volume [veh/h]	0	0	70	0	130	274
Total Analysis Volume [veh/h]	0	0	280	0	521	1094
Pedestrian Volume [ped/h]	0		0		0	
Bicycle Volume [bicycles/h]	0		0		0	

Intersection Settings

Cycle Length [s]	100
Lost time [s]	10.00

Phasing & Timing

Control Type	Permissive	Permissive	Permissive	Permissive	Protected	Permissive
Signal group	0	0	2	0	1	6
Auxiliary Signal Groups						
Lead / Lag	-	-	-	-	Lead	-

Movement, Approach, & Intersection Results

V/C, Movement V/C Ratio	0.00	0.00	0.09	0.00	0.33	0.34
Intersection LOS	A					
Intersection V/C	0.513					

Intersection Level Of Service Report
Intersection 2: I-605 NB Ramps (NS) at Live Oak Avenue (EW)

Control Type:	Two-way stop	Delay (sec / veh):	67.9
Analysis Method:	HCM 6th Edition	Level Of Service:	F
Analysis Period:	15 minutes	Volume to Capacity (v/c):	0.976

Intersection Setup

Name	I-605 NB Ramps			I-605 NB Ramps			Live Oak Avenue			Live Oak Avenue		
Approach	Northbound			Southbound			Eastbound			Westbound		
Lane Configuration												
Turning Movement	Left	Thru	Right	Left	Thru	Right	Left	Thru	Right	Left	Thru	Right
Lane Width [ft]	12.00	12.00	12.00	12.00	12.00	12.00	12.00	12.00	12.00	12.00	12.00	12.00
No. of Lanes in Pocket	0	0	0	0	0	0	0	0	0	0	0	0
Pocket Length [ft]	100.00	100.00	100.00	100.00	100.00	100.00	100.00	100.00	100.00	100.00	100.00	100.00
Speed [mph]	35.00			35.00			45.00			45.00		
Grade [%]	0.00			0.00			0.00			0.00		
Crosswalk	Yes			Yes			No			No		

Volumes

Name	I-605 NB Ramps			I-605 NB Ramps			Live Oak Avenue			Live Oak Avenue		
Base Volume Input [veh/h]	0	0	469	0	0	432	0	262	0	0	1205	0
Base Volume Adjustment Factor	1.0000	1.0000	1.0000	1.0000	1.0000	1.0000	1.0000	1.0000	1.0000	1.0000	1.0000	1.0000
Heavy Vehicles Percentage [%]	2.00	2.00	2.00	2.00	2.00	2.00	2.00	2.00	2.00	2.00	2.00	2.00
Growth Rate	1.00	1.00	1.00	1.00	1.00	1.00	1.00	1.00	1.00	1.00	1.00	1.00
In-Process Volume [veh/h]	0	0	0	0	0	0	0	0	0	0	0	0
Site-Generated Trips [veh/h]	0	0	0	0	0	0	0	0	0	0	0	0
Diverted Trips [veh/h]	0	0	0	0	0	0	0	0	0	0	0	0
Pass-by Trips [veh/h]	0	0	0	0	0	0	0	0	0	0	0	0
Existing Site Adjustment Volume [veh/h]	0	0	0	0	0	0	0	0	0	0	0	0
Other Volume [veh/h]	0	0	0	0	0	0	0	0	0	0	0	0
Total Hourly Volume [veh/h]	0	0	469	0	0	432	0	262	0	0	1205	0
Peak Hour Factor	1.0000	1.0000	1.0000	1.0000	1.0000	1.0000	1.0000	1.0000	1.0000	1.0000	1.0000	1.0000
Other Adjustment Factor	1.0000	1.0000	1.0000	1.0000	1.0000	1.0000	1.0000	1.0000	1.0000	1.0000	1.0000	1.0000
Total 15-Minute Volume [veh/h]	0	0	117	0	0	108	0	66	0	0	301	0
Total Analysis Volume [veh/h]	0	0	469	0	0	432	0	262	0	0	1205	0
Pedestrian Volume [ped/h]	0			0			0			0		

Intersection Settings

Priority Scheme	Stop	Stop	Free	Free
Flared Lane				
Storage Area [veh]	0	0	0	0
Two-Stage Gap Acceptance	No	No		
Number of Storage Spaces in Median	0	0	0	0

Movement, Approach, & Intersection Results

V/C, Movement V/C Ratio	0.00	0.00	0.52	0.00	0.00	0.98	0.00	0.00	0.00	0.00	0.01	0.00
d_M, Delay for Movement [s/veh]	0.00	0.00	13.38	0.00	0.00	67.88	0.00	0.00	0.00	0.00	0.00	0.00
Movement LOS			B			F		A			A	
95th-Percentile Queue Length [veh/ln]	0.00	0.00	3.12	0.00	0.00	12.09	0.00	0.00	0.00	0.00	0.00	0.00
95th-Percentile Queue Length [ft/ln]	0.00	0.00	78.12	0.00	0.00	302.35	0.00	0.00	0.00	0.00	0.00	0.00
d_A, Approach Delay [s/veh]	13.38			67.88			0.00			0.00		
Approach LOS	B			F			A			A		
d_I, Intersection Delay [s/veh]	15.03											
Intersection LOS	F											

Intersection Level Of Service Report
Intersection 3: Graham Road (NS) at Live Oak Avenue (EW)

Control Type:	Signalized	Delay (sec / veh):	-
Analysis Method:	ICU 1	Level Of Service:	A
Analysis Period:	15 minutes	Volume to Capacity (v/c):	0.565

Intersection Setup

Name	Graham Road		Live Oak Avenue		Live Oak Avenue	
Approach	Northbound		Eastbound		Westbound	
Lane Configuration						
Turning Movement	Left	Right	Thru	Right	Left	Thru
Lane Width [ft]	12.00	12.00	12.00	12.00	12.00	12.00
No. of Lanes in Pocket	0	0	0	0	1	0
Pocket Length [ft]	100.00	100.00	100.00	100.00	205.00	100.00
Speed [mph]	35.00		45.00		45.00	
Grade [%]	0.00		0.00		0.00	
Crosswalk	Yes		No		Yes	

Volumes

Name	Graham Road		Live Oak Avenue		Live Oak Avenue	
Base Volume Input [veh/h]	38	39	578	28	14	1334
Base Volume Adjustment Factor	1.0000	1.0000	1.0000	1.0000	1.0000	1.0000
Heavy Vehicles Percentage [%]	2.00	2.00	2.00	2.00	2.00	2.00
Growth Rate	1.00	1.00	1.00	1.00	1.00	1.00
In-Process Volume [veh/h]	0	0	0	0	0	0
Site-Generated Trips [veh/h]	0	0	0	0	0	0
Diverted Trips [veh/h]	0	0	0	0	0	0
Pass-by Trips [veh/h]	0	0	0	0	0	0
Existing Site Adjustment Volume [veh/h]	0	0	0	0	0	0
Other Volume [veh/h]	0	0	0	0	0	0
Total Hourly Volume [veh/h]	38	39	578	28	14	1334
Peak Hour Factor	1.0000	1.0000	1.0000	1.0000	1.0000	1.0000
Other Adjustment Factor	1.0000	1.0000	1.0000	1.0000	1.0000	1.0000
Total 15-Minute Volume [veh/h]	10	10	145	7	4	334
Total Analysis Volume [veh/h]	38	39	578	28	14	1334
Pedestrian Volume [ped/h]	0		0		0	
Bicycle Volume [bicycles/h]	0		0		0	

Intersection Settings

Cycle Length [s]	100
Lost time [s]	10.00

Phasing & Timing

Control Type	Permissive	Permissive	Permissive	Permissive	Protected	Permissive
Signal group	5	0	8	0	7	4
Auxiliary Signal Groups						
Lead / Lag	Lead	-	-	-	Lead	-

Movement, Approach, & Intersection Results

V/C, Movement V/C Ratio	0.02	0.05	0.18	0.02	0.01	0.42
Intersection LOS	A					
Intersection V/C	0.565					

Intersection Level Of Service Report
Intersection 4: Rivergrade Road (NS) at Live Oak Avenue (EW)

Control Type:	Signalized	Delay (sec / veh):	-
Analysis Method:	ICU 1	Level Of Service:	A
Analysis Period:	15 minutes	Volume to Capacity (v/c):	0.581

Intersection Setup

Name	Rivergrade Raod			Rivergrade Road			Live Oak Avenue			Live Oak Avenue		
Approach	Northbound			Southbound			Eastbound			Westbound		
Lane Configuration												
Turning Movement	Left	Thru	Right	Left	Thru	Right	Left	Thru	Right	Left	Thru	Right
Lane Width [ft]	12.00	12.00	12.00	12.00	12.00	12.00	12.00	12.00	12.00	12.00	12.00	12.00
No. of Lanes in Pocket	1	0	0	1	0	1	1	0	0	1	0	1
Pocket Length [ft]	315.00	100.00	100.00	160.00	100.00	145.00	205.00	100.00	100.00	155.00	100.00	120.00
Speed [mph]	50.00			40.00			45.00			45.00		
Grade [%]	0.00			0.00			0.00			0.00		
Crosswalk	Yes			Yes			Yes			Yes		

Volumes

Name	Rivergrade Raod			Rivergrade Road			Live Oak Avenue			Live Oak Avenue		
Base Volume Input [veh/h]	52	67	138	24	311	58	71	587	77	268	983	22
Base Volume Adjustment Factor	1.0000	1.0000	1.0000	1.0000	1.0000	1.0000	1.0000	1.0000	1.0000	1.0000	1.0000	1.0000
Heavy Vehicles Percentage [%]	2.00	2.00	2.00	2.00	2.00	2.00	2.00	2.00	2.00	2.00	2.00	2.00
Growth Rate	1.00	1.00	1.00	1.00	1.00	1.00	1.00	1.00	1.00	1.00	1.00	1.00
In-Process Volume [veh/h]	0	0	0	0	0	0	0	0	0	0	0	0
Site-Generated Trips [veh/h]	0	0	0	0	0	0	0	0	0	0	0	0
Diverted Trips [veh/h]	0	0	0	0	0	0	0	0	0	0	0	0
Pass-by Trips [veh/h]	0	0	0	0	0	0	0	0	0	0	0	0
Existing Site Adjustment Volume [veh/h]	0	0	0	0	0	0	0	0	0	0	0	0
Other Volume [veh/h]	0	0	0	0	0	0	0	0	0	0	0	0
Total Hourly Volume [veh/h]	52	67	138	24	311	58	71	587	77	268	983	22
Peak Hour Factor	1.0000	1.0000	1.0000	1.0000	1.0000	1.0000	1.0000	1.0000	1.0000	1.0000	1.0000	1.0000
Other Adjustment Factor	1.0000	1.0000	1.0000	1.0000	1.0000	1.0000	1.0000	1.0000	1.0000	1.0000	1.0000	1.0000
Total 15-Minute Volume [veh/h]	13	17	35	6	78	15	18	147	19	67	246	6
Total Analysis Volume [veh/h]	52	67	138	24	311	58	71	587	77	268	983	22
Pedestrian Volume [ped/h]	0			0			0			0		
Bicycle Volume [bicycles/h]	0			0			0			0		

Intersection Settings

Cycle Length [s]	100
Lost time [s]	10.00

Phasing & Timing

Control Type	Protecte	Permiss	Overlap	Protecte	Permiss	Permiss	Protecte	Permiss	Permiss	Protecte	Permiss	Permiss
Signal group	5	2	2	1	6	0	3	8	0	7	4	0
Auxiliary Signal Groups			2,7									
Lead / Lag	Lead	-	-	Lead	-	-	Lead	-	-	Lead	-	-

Movement, Approach, & Intersection Results

V/C, Movement V/C Ratio	0.03	0.04	0.00	0.02	0.10	0.04	0.04	0.18	0.05	0.17	0.31	0.01
Intersection LOS	A											
Intersection V/C	0.581											

Intersection Level Of Service Report
Intersection 5: Stewart Avenue (NS) at Live Oak Avenue (EW)

Control Type:	Signalized	Delay (sec / veh):	-
Analysis Method:	ICU 1	Level Of Service:	D
Analysis Period:	15 minutes	Volume to Capacity (v/c):	0.804

Intersection Setup

Name	Stewart Avenue			Stewart Avenue			Live Oak Avenue			Live Oak Avenue		
Approach	Northbound			Southbound			Eastbound			Westbound		
Lane Configuration												
Turning Movement	Left	Thru	Right	Left	Thru	Right	Left	Thru	Right	Left	Thru	Right
Lane Width [ft]	12.00	12.00	12.00	12.00	12.00	12.00	12.00	12.00	12.00	12.00	12.00	12.00
No. of Lanes in Pocket	0	0	0	1	0	0	1	0	0	1	0	0
Pocket Length [ft]	100.00	100.00	100.00	100.00	100.00	100.00	165.00	100.00	100.00	100.00	100.00	100.00
Speed [mph]	30.00			30.00			45.00			45.00		
Grade [%]	0.00			0.00			0.00			0.00		
Crosswalk	Yes			Yes			No			Yes		

Volumes

Name	Stewart Avenue			Stewart Avenue			Live Oak Avenue			Live Oak Avenue		
Base Volume Input [veh/h]	239	112	28	10	35	49	12	609	25	23	1450	26
Base Volume Adjustment Factor	1.0000	1.0000	1.0000	1.0000	1.0000	1.0000	1.0000	1.0000	1.0000	1.0000	1.0000	1.0000
Heavy Vehicles Percentage [%]	2.00	2.00	2.00	2.00	2.00	2.00	2.00	2.00	2.00	2.00	2.00	2.00
Growth Rate	1.00	1.00	1.00	1.00	1.00	1.00	1.00	1.00	1.00	1.00	1.00	1.00
In-Process Volume [veh/h]	0	0	0	0	0	0	0	0	0	0	0	0
Site-Generated Trips [veh/h]	0	0	0	0	0	0	0	0	0	0	0	0
Diverted Trips [veh/h]	0	0	0	0	0	0	0	0	0	0	0	0
Pass-by Trips [veh/h]	0	0	0	0	0	0	0	0	0	0	0	0
Existing Site Adjustment Volume [veh/h]	0	0	0	0	0	0	0	0	0	0	0	0
Other Volume [veh/h]	0	0	0	0	0	0	0	0	0	0	0	0
Total Hourly Volume [veh/h]	239	112	28	10	35	49	12	609	25	23	1450	26
Peak Hour Factor	1.0000	1.0000	1.0000	1.0000	1.0000	1.0000	1.0000	1.0000	1.0000	1.0000	1.0000	1.0000
Other Adjustment Factor	1.0000	1.0000	1.0000	1.0000	1.0000	1.0000	1.0000	1.0000	1.0000	1.0000	1.0000	1.0000
Total 15-Minute Volume [veh/h]	60	28	7	3	9	12	3	152	6	6	363	7
Total Analysis Volume [veh/h]	239	112	28	10	35	49	12	609	25	23	1450	26
Pedestrian Volume [ped/h]	0			0			0			0		
Bicycle Volume [bicycles/h]	0			0			0			0		

Intersection Settings

Cycle Length [s]	100
Lost time [s]	10.00

Phasing & Timing

Control Type	Permiss	Permiss	Permiss	Permiss	Permiss	Permiss	Permiss	Permiss	Permiss	Permiss	Permiss	Permiss
Signal group	0	2	0	0	6	0	0	8	0	0	4	0
Auxiliary Signal Groups												
Lead / Lag	-	-	-	-	-	-	-	-	-	-	-	-

Movement, Approach, & Intersection Results

V/C, Movement V/C Ratio	0.15	0.24	0.24	0.01	0.02	0.03	0.01	0.19	0.02	0.01	0.45	0.02
Intersection LOS	D											
Intersection V/C	0.804											

Intersection Level Of Service Report
Intersection 6: Baldwin Park Boulevard (NS) at Live Oak Avenue (EW)

Control Type:	Signalized	Delay (sec / veh):	-
Analysis Method:	ICU 1	Level Of Service:	A
Analysis Period:	15 minutes	Volume to Capacity (v/c):	0.595

Intersection Setup

Name	Baldwin Park Boulevard		Live Oak Avenue		Live Oak Avenue	
Approach	Northbound		Eastbound		Westbound	
Lane Configuration						
Turning Movement	Left	Right	Thru	Right	Left	Thru
Lane Width [ft]	12.00	12.00	12.00	12.00	12.00	12.00
No. of Lanes in Pocket	1	0	0	0	1	0
Pocket Length [ft]	100.00	100.00	100.00	100.00	200.00	100.00
Speed [mph]	40.00		45.00		45.00	
Grade [%]	0.00		0.00		0.00	
Crosswalk	Yes		No		No	

Volumes

Name	Baldwin Park Boulevard		Live Oak Avenue		Live Oak Avenue	
Base Volume Input [veh/h]	311	237	581	89	143	1056
Base Volume Adjustment Factor	1.0000	1.0000	1.0000	1.0000	1.0000	1.0000
Heavy Vehicles Percentage [%]	2.00	2.00	2.00	2.00	2.00	2.00
Growth Rate	1.00	1.00	1.00	1.00	1.00	1.00
In-Process Volume [veh/h]	0	0	0	0	0	0
Site-Generated Trips [veh/h]	0	0	0	0	0	0
Diverted Trips [veh/h]	0	0	0	0	0	0
Pass-by Trips [veh/h]	0	0	0	0	0	0
Existing Site Adjustment Volume [veh/h]	0	0	0	0	0	0
Other Volume [veh/h]	0	0	0	0	0	0
Total Hourly Volume [veh/h]	311	237	581	89	143	1056
Peak Hour Factor	1.0000	1.0000	1.0000	1.0000	1.0000	1.0000
Other Adjustment Factor	1.0000	1.0000	1.0000	1.0000	1.0000	1.0000
Total 15-Minute Volume [veh/h]	78	59	145	22	36	264
Total Analysis Volume [veh/h]	311	237	581	89	143	1056
Pedestrian Volume [ped/h]	0		0		0	
Bicycle Volume [bicycles/h]	0		0		0	

Intersection Settings

Cycle Length [s]	100
Lost time [s]	10.00

Phasing & Timing

Control Type	Permissive	Permissive	Permissive	Permissive	Protected	Permissive
Signal group	5	0	8	0	7	4
Auxiliary Signal Groups						
Lead / Lag	Lead	-	-	-	Lead	-

Movement, Approach, & Intersection Results

V/C, Movement V/C Ratio	0.10	0.16	0.18	0.06	0.09	0.33
Intersection LOS	A					
Intersection V/C	0.595					

Intersection Level Of Service Report
Intersection 7: Arrow Highway (NS) at Live Oak Ave/Arrow Hwy (EW)

Control Type:	Signalized	Delay (sec / veh):	-
Analysis Method:	ICU 1	Level Of Service:	B
Analysis Period:	15 minutes	Volume to Capacity (v/c):	0.622

Intersection Setup

Name			Live Oak Avenue		Arrow Highway	
Approach	Southbound		Eastbound		Westbound	
Lane Configuration						
Turning Movement	Left	Right	Left	Thru	Thru	Right
Lane Width [ft]	12.00	12.00	12.00	12.00	12.00	12.00
No. of Lanes in Pocket	0	0	1	0	0	0
Pocket Length [ft]	100.00	100.00	160.00	100.00	100.00	100.00
Speed [mph]	35.00		45.00		45.00	
Grade [%]	0.00		0.00		0.00	
Crosswalk	No		Yes		No	

Volumes

Name			Live Oak Avenue		Arrow Highway	
Base Volume Input [veh/h]	296	59	113	634	1117	1772
Base Volume Adjustment Factor	1.0000	1.0000	1.0000	1.0000	1.0000	1.0000
Heavy Vehicles Percentage [%]	2.00	2.00	2.00	2.00	2.00	2.00
Growth Rate	1.00	1.00	1.00	1.00	1.00	1.00
In-Process Volume [veh/h]	0	0	0	0	0	0
Site-Generated Trips [veh/h]	0	0	0	0	0	0
Diverted Trips [veh/h]	0	0	0	0	0	0
Pass-by Trips [veh/h]	0	0	0	0	0	0
Existing Site Adjustment Volume [veh/h]	0	0	0	0	0	0
Other Volume [veh/h]	0	0	0	0	0	0
Total Hourly Volume [veh/h]	296	59	113	634	1117	1772
Peak Hour Factor	1.0000	1.0000	1.0000	1.0000	1.0000	1.0000
Other Adjustment Factor	1.0000	1.0000	1.0000	1.0000	1.0000	1.0000
Total 15-Minute Volume [veh/h]	74	15	28	159	279	443
Total Analysis Volume [veh/h]	296	59	113	634	1117	1772
Pedestrian Volume [ped/h]	0		0		0	
Bicycle Volume [bicycles/h]	0		0		0	

Intersection Settings

Cycle Length [s]	100
Lost time [s]	10.00

Phasing & Timing

Control Type	Permissive	Permissive	Permissive	Permissive	Permissive	Unsignalized
Signal group	1	0	0	8	4	0
Auxiliary Signal Groups						
Lead / Lag	Lead	-	-	-	-	-

Movement, Approach, & Intersection Results

V/C, Movement V/C Ratio	0.09	0.04	0.07	0.20	0.35	0.00
Intersection LOS	B					
Intersection V/C	0.622					

Intersection Level Of Service Report
Intersection 8: Maine Avenue (NS) at Arrow Highway (EW)

Control Type:	Signalized	Delay (sec / veh):	-
Analysis Method:	ICU 1	Level Of Service:	C
Analysis Period:	15 minutes	Volume to Capacity (v/c):	0.787

Intersection Setup

Name	Maine Avenue		Arrow Highway		Arrow Highway	
Approach	Northbound		Eastbound		Westbound	
Lane Configuration						
Turning Movement	Left	Right	Thru	Right	Left	Thru
Lane Width [ft]	12.00	12.00	12.00	12.00	12.00	12.00
No. of Lanes in Pocket	0	1	0	0	1	0
Pocket Length [ft]	100.00	50.00	100.00	100.00	80.00	100.00
Speed [mph]	35.00		45.00		45.00	
Grade [%]	0.00		0.00		0.00	
Crosswalk	Yes		No		Yes	

Volumes

Name	Maine Avenue		Arrow Highway		Arrow Highway	
Base Volume Input [veh/h]	606	96	869	172	61	2288
Base Volume Adjustment Factor	1.0000	1.0000	1.0000	1.0000	1.0000	1.0000
Heavy Vehicles Percentage [%]	2.00	2.00	2.00	2.00	2.00	2.00
Growth Rate	1.00	1.00	1.00	1.00	1.00	1.00
In-Process Volume [veh/h]	0	0	0	0	0	0
Site-Generated Trips [veh/h]	0	0	0	0	0	0
Diverted Trips [veh/h]	0	0	0	0	0	0
Pass-by Trips [veh/h]	0	0	0	0	0	0
Existing Site Adjustment Volume [veh/h]	0	0	0	0	0	0
Other Volume [veh/h]	0	0	0	0	0	0
Total Hourly Volume [veh/h]	606	96	869	172	61	2288
Peak Hour Factor	1.0000	1.0000	1.0000	1.0000	1.0000	1.0000
Other Adjustment Factor	1.0000	1.0000	1.0000	1.0000	1.0000	1.0000
Total 15-Minute Volume [veh/h]	152	24	217	43	15	572
Total Analysis Volume [veh/h]	606	96	869	172	61	2288
Pedestrian Volume [ped/h]	0		0		0	
Bicycle Volume [bicycles/h]	0		0		0	

Intersection Settings

Cycle Length [s]	100
Lost time [s]	10.00

Phasing & Timing

Control Type	Split	Split	Permissive	Permissive	Permissive	Permissive
Signal group	5	0	8	0	0	4
Auxiliary Signal Groups						
Lead / Lag	Lead	-	-	-	-	-

Movement, Approach, & Intersection Results

V/C, Movement V/C Ratio	0.19	0.06	0.27	0.11	0.04	0.48
Intersection LOS	C					
Intersection V/C	0.787					

Intersection Level Of Service Report
Intersection 9: Santa Fe Dam/Azusa Canyon Road (NS) at Arrow Highway (EW)

Control Type:	Signalized	Delay (sec / veh):	-
Analysis Method:	ICU 1	Level Of Service:	E
Analysis Period:	15 minutes	Volume to Capacity (v/c):	0.921

Intersection Setup

Name	Azusa Canyon Road						Arrow Highway			Arrow Highway		
Approach	Northbound			Southbound			Eastbound			Westbound		
Lane Configuration												
Turning Movement	Left	Thru	Right	Left	Thru	Right	Left	Thru	Right	Left	Thru	Right
Lane Width [ft]	12.00	12.00	12.00	12.00	12.00	12.00	12.00	12.00	12.00	12.00	12.00	12.00
No. of Lanes in Pocket	1	0	0	0	0	0	1	0	0	1	0	0
Pocket Length [ft]	200.00	100.00	100.00	100.00	100.00	100.00	185.00	100.00	100.00	180.00	100.00	100.00
Speed [mph]	35.00			35.00			45.00			45.00		
Grade [%]	0.00			0.00			0.00			0.00		
Crosswalk	Yes			Yes			No			Yes		

Volumes

Name	Azusa Canyon Road						Arrow Highway			Arrow Highway		
Base Volume Input [veh/h]	837	14	145	11	3	12	19	624	122	67	1708	23
Base Volume Adjustment Factor	1.0000	1.0000	1.0000	1.0000	1.0000	1.0000	1.0000	1.0000	1.0000	1.0000	1.0000	1.0000
Heavy Vehicles Percentage [%]	2.00	2.00	2.00	2.00	2.00	2.00	2.00	2.00	2.00	2.00	2.00	2.00
Growth Rate	1.00	1.00	1.00	1.00	1.00	1.00	1.00	1.00	1.00	1.00	1.00	1.00
In-Process Volume [veh/h]	0	0	0	0	0	0	0	0	0	0	0	0
Site-Generated Trips [veh/h]	0	0	0	0	0	0	0	0	0	0	0	0
Diverted Trips [veh/h]	0	0	0	0	0	0	0	0	0	0	0	0
Pass-by Trips [veh/h]	0	0	0	0	0	0	0	0	0	0	0	0
Existing Site Adjustment Volume [veh/h]	0	0	0	0	0	0	0	0	0	0	0	0
Other Volume [veh/h]	0	0	0	0	0	0	0	0	0	0	0	0
Total Hourly Volume [veh/h]	837	14	145	11	3	12	19	624	122	67	1708	23
Peak Hour Factor	1.0000	1.0000	1.0000	1.0000	1.0000	1.0000	1.0000	1.0000	1.0000	1.0000	1.0000	1.0000
Other Adjustment Factor	1.0000	1.0000	1.0000	1.0000	1.0000	1.0000	1.0000	1.0000	1.0000	1.0000	1.0000	1.0000
Total 15-Minute Volume [veh/h]	209	4	36	3	1	3	5	156	31	17	427	6
Total Analysis Volume [veh/h]	837	14	145	11	3	12	19	624	122	67	1708	23
Pedestrian Volume [ped/h]	0			0			0			0		
Bicycle Volume [bicycles/h]	0			0			0			0		

Intersection Settings

Cycle Length [s]	100
Lost time [s]	10.00

Phasing & Timing

Control Type	Split	Split	Split	Split	Split	Split	Protecte	Permiss	Permiss	Protecte	Permiss	Permiss
Signal group	0	2	0	0	6	0	3	8	0	7	4	0
Auxiliary Signal Groups												
Lead / Lag	-	-	-	-	-	-	Lead	-	-	Lead	-	-

Movement, Approach, & Intersection Results

V/C, Movement V/C Ratio	0.26	0.27	0.09	0.01	0.01	0.01	0.01	0.20	0.08	0.04	0.53	0.01
Intersection LOS	E											
Intersection V/C	0.921											

Intersection Level Of Service Report
Intersection 10: 4th Street (NS) at Arrow Highway (EW)

Control Type:	Signalized	Delay (sec / veh):	-
Analysis Method:	ICU 1	Level Of Service:	A
Analysis Period:	15 minutes	Volume to Capacity (v/c):	0.343

Intersection Setup

Name	4th Street			4th Street			Arrow Highway			Arrow Highway		
Approach	Northbound			Southbound			Eastbound			Westbound		
Lane Configuration												
Turning Movement	Left	Thru	Right	Left	Thru	Right	Left	Thru	Right	Left	Thru	Right
Lane Width [ft]	12.00	12.00	12.00	12.00	12.00	12.00	12.00	12.00	12.00	12.00	12.00	12.00
No. of Lanes in Pocket	1	0	0	0	0	0	1	0	1	1	0	0
Pocket Length [ft]	55.00	100.00	100.00	100.00	100.00	100.00	145.00	100.00	150.00	195.00	100.00	100.00
Speed [mph]	35.00			25.00			45.00			45.00		
Grade [%]	0.00			0.00			0.00			0.00		
Crosswalk	Yes			Yes			Yes			Yes		

Volumes

Name	4th Street			4th Street			Arrow Highway			Arrow Highway		
Base Volume Input [veh/h]	76	1	22	3	2	12	20	769	126	77	0	0
Base Volume Adjustment Factor	1.0000	1.0000	1.0000	1.0000	1.0000	1.0000	1.0000	1.0000	1.0000	1.0000	1.0000	1.0000
Heavy Vehicles Percentage [%]	2.00	2.00	2.00	2.00	2.00	2.00	2.00	2.00	2.00	2.00	2.00	2.00
Growth Rate	1.00	1.00	1.00	1.00	1.00	1.00	1.00	1.00	1.00	1.00	1.00	1.00
In-Process Volume [veh/h]	0	0	0	0	0	0	0	0	0	0	0	0
Site-Generated Trips [veh/h]	0	0	0	0	0	0	0	0	0	0	0	0
Diverted Trips [veh/h]	0	0	0	0	0	0	0	0	0	0	0	0
Pass-by Trips [veh/h]	0	0	0	0	0	0	0	0	0	0	0	0
Existing Site Adjustment Volume [veh/h]	0	0	0	0	0	0	0	0	0	0	0	0
Other Volume [veh/h]	0	0	0	0	0	0	0	0	0	0	0	0
Total Hourly Volume [veh/h]	76	1	22	3	2	12	20	769	126	77	0	0
Peak Hour Factor	1.0000	1.0000	1.0000	1.0000	1.0000	1.0000	1.0000	1.0000	1.0000	1.0000	1.0000	1.0000
Other Adjustment Factor	1.0000	1.0000	1.0000	1.0000	1.0000	1.0000	1.0000	1.0000	1.0000	1.0000	1.0000	1.0000
Total 15-Minute Volume [veh/h]	19	0	6	1	1	3	5	192	32	19	0	0
Total Analysis Volume [veh/h]	76	1	22	3	2	12	20	769	126	77	0	0
Pedestrian Volume [ped/h]	0			0			0			0		
Bicycle Volume [bicycles/h]	0			0			0			0		

Intersection Settings

Cycle Length [s]	100
Lost time [s]	10.00

Phasing & Timing

Control Type	Split	Split	Split	Split	Split	Split	Protecte	Permiss	Permiss	Protecte	Permiss	Permiss
Signal group	0	2	0	0	6	0	3	8	0	7	4	0
Auxiliary Signal Groups												
Lead / Lag	-	-	-	-	-	-	Lead	-	-	Lead	-	-

Movement, Approach, & Intersection Results

V/C, Movement V/C Ratio	0.02	0.02	0.01	0.00	0.01	0.01	0.01	0.16	0.08	0.05	0.00	0.00
Intersection LOS	A											
Intersection V/C	0.343											

Intersection Level Of Service Report
Intersection 11: Irwindale Avenue (NS) at I-210 WB Ramps (EW)

Control Type:	Signalized	Delay (sec / veh):	-
Analysis Method:	ICU 1	Level Of Service:	A
Analysis Period:	15 minutes	Volume to Capacity (v/c):	0.459

Intersection Setup

Name	Irwindale Avenue				I-210 WB Ramps	
Approach	Northbound		Southbound		Westbound	
Lane Configuration						
Turning Movement	Thru	Right	Left	Thru	Left	Right
Lane Width [ft]	12.00	12.00	12.00	12.00	12.00	12.00
No. of Lanes in Pocket	0	0	0	0	0	0
Pocket Length [ft]	100.00	100.00	100.00	100.00	100.00	100.00
Speed [mph]	35.00		35.00		35.00	
Grade [%]	0.00		0.00		0.00	
Crosswalk	No		No		Yes	

Volumes

Name	Irwindale Avenue				I-210 WB Ramps	
Base Volume Input [veh/h]	826	0	0	1049	281	169
Base Volume Adjustment Factor	1.0000	1.0000	1.0000	1.0000	1.0000	1.0000
Heavy Vehicles Percentage [%]	2.00	2.00	2.00	2.00	2.00	2.00
Growth Rate	1.00	1.00	1.00	1.00	1.00	1.00
In-Process Volume [veh/h]	0	0	0	0	0	0
Site-Generated Trips [veh/h]	0	0	0	0	0	0
Diverted Trips [veh/h]	0	0	0	0	0	0
Pass-by Trips [veh/h]	0	0	0	0	0	0
Existing Site Adjustment Volume [veh/h]	0	0	0	0	0	0
Other Volume [veh/h]	0	0	0	0	0	0
Total Hourly Volume [veh/h]	826	0	0	1049	281	169
Peak Hour Factor	1.0000	1.0000	1.0000	1.0000	1.0000	1.0000
Other Adjustment Factor	1.0000	1.0000	1.0000	1.0000	1.0000	1.0000
Total 15-Minute Volume [veh/h]	207	0	0	262	70	42
Total Analysis Volume [veh/h]	826	0	0	1049	281	169
Pedestrian Volume [ped/h]	0		0		0	
Bicycle Volume [bicycles/h]	0		0		0	

Intersection Settings

Cycle Length [s]	100
Lost time [s]	10.00

Phasing & Timing

Control Type	Permissive	Permissive	Permissive	Permissive	Split	Split
Signal group	2	0	0	6	7	0
Auxiliary Signal Groups						
Lead / Lag	-	-	-	-	Lead	-

Movement, Approach, & Intersection Results

V/C, Movement V/C Ratio	0.17	0.00	0.00	0.22	0.09	0.14
Intersection LOS	A					
Intersection V/C	0.459					

Intersection Level Of Service Report
Intersection 12: Irwindale Avenue (NS) at I-210 EB Ramps (EW)

Control Type:	Signalized	Delay (sec / veh):	-
Analysis Method:	ICU 1	Level Of Service:	B
Analysis Period:	15 minutes	Volume to Capacity (v/c):	0.665

Intersection Setup

Name	Irwindale Avenue			Irwindale Avenue			I-210 EB Ramps			I-210 EB Ramps		
Approach	Northbound			Southbound			Eastbound			Westbound		
Lane Configuration												
Turning Movement	Left	Thru	Right	Left	Thru	Right	Left	Thru	Right	Left	Thru	Right
Lane Width [ft]	12.00	12.00	12.00	12.00	12.00	12.00	12.00	12.00	12.00	12.00	12.00	12.00
No. of Lanes in Pocket	0	0	1	1	0	0	0	0	0	0	0	0
Pocket Length [ft]	100.00	100.00	505.00	330.00	100.00	100.00	100.00	100.00	100.00	100.00	100.00	100.00
Speed [mph]	35.00			35.00			35.00			35.00		
Grade [%]	0.00			0.00			0.00			0.00		
Crosswalk	No			No			No			Yes		

Volumes

Name	Irwindale Avenue			Irwindale Avenue			I-210 EB Ramps			I-210 EB Ramps		
Base Volume Input [veh/h]	0	829	235	167	595	0	444	0	748	0	0	0
Base Volume Adjustment Factor	1.0000	1.0000	1.0000	1.0000	1.0000	1.0000	1.0000	1.0000	1.0000	1.0000	1.0000	1.0000
Heavy Vehicles Percentage [%]	2.00	2.00	2.00	2.00	2.00	2.00	2.00	2.00	2.00	2.00	2.00	2.00
Growth Rate	1.00	1.00	1.00	1.00	1.00	1.00	1.00	1.00	1.00	1.00	1.00	1.00
In-Process Volume [veh/h]	0	0	0	0	0	0	0	0	0	0	0	0
Site-Generated Trips [veh/h]	0	0	0	0	0	0	0	0	0	0	0	0
Diverted Trips [veh/h]	0	0	0	0	0	0	0	0	0	0	0	0
Pass-by Trips [veh/h]	0	0	0	0	0	0	0	0	0	0	0	0
Existing Site Adjustment Volume [veh/h]	0	0	0	0	0	0	0	0	0	0	0	0
Other Volume [veh/h]	0	0	0	0	0	0	0	0	0	0	0	0
Total Hourly Volume [veh/h]	0	829	235	167	595	0	444	0	748	0	0	0
Peak Hour Factor	1.0000	1.0000	1.0000	1.0000	1.0000	1.0000	1.0000	1.0000	1.0000	1.0000	1.0000	1.0000
Other Adjustment Factor	1.0000	1.0000	1.0000	1.0000	1.0000	1.0000	1.0000	1.0000	1.0000	1.0000	1.0000	1.0000
Total 15-Minute Volume [veh/h]	0	207	59	42	149	0	111	0	187	0	0	0
Total Analysis Volume [veh/h]	0	829	235	167	595	0	444	0	748	0	0	0
Pedestrian Volume [ped/h]	0			0			0			0		
Bicycle Volume [bicycles/h]	0			0			0			0		

Intersection Settings

Cycle Length [s]	100
Lost time [s]	10.00

Phasing & Timing

Control Type	Permiss	Permiss	Permiss	Protecte	Permiss	Permiss	Split	Permiss	Split	Permiss	Permiss	Permiss
Signal group	0	2	0	1	6	0	3	0	0	0	0	0
Auxiliary Signal Groups												
Lead / Lag	-	-	-	Lead	-	-	Lead	-	-	-	-	-

Movement, Approach, & Intersection Results

V/C, Movement V/C Ratio	0.00	0.26	0.15	0.05	0.19	0.00	0.14	0.00	0.25	0.00	0.00	0.00
Intersection LOS	B											
Intersection V/C	0.665											

Intersection Level Of Service Report
Intersection 13: Irwindale Avenue (NS) at Jardin De Roca/Irwindale Rd (EW)

Control Type:	Signalized	Delay (sec / veh):	-
Analysis Method:	ICU 1	Level Of Service:	A
Analysis Period:	15 minutes	Volume to Capacity (v/c):	0.565

Intersection Setup

Name	Irwindale Avenue			Irwindale Avenue			Jardin De Roca			Irwindale Road		
Approach	Northbound			Southbound			Eastbound			Westbound		
Lane Configuration												
Turning Movement	Left	Thru	Right	Left	Thru	Right	Left	Thru	Right	Left	Thru	Right
Lane Width [ft]	12.00	12.00	12.00	12.00	12.00	12.00	12.00	12.00	12.00	12.00	12.00	12.00
No. of Lanes in Pocket	1	0	1	1	0	0	0	0	0	0	0	0
Pocket Length [ft]	130.00	100.00	180.00	245.00	100.00	100.00	100.00	100.00	100.00	100.00	100.00	100.00
Speed [mph]	35.00			35.00			25.00			25.00		
Grade [%]	0.00			0.00			0.00			0.00		
Crosswalk	No			No			No			Yes		

Volumes

Name	Irwindale Avenue			Irwindale Avenue			Jardin De Roca			Irwindale Road		
Base Volume Input [veh/h]	53	1015	115	168	1133	41	10	0	13	24	0	35
Base Volume Adjustment Factor	1.0000	1.0000	1.0000	1.0000	1.0000	1.0000	1.0000	1.0000	1.0000	1.0000	1.0000	1.0000
Heavy Vehicles Percentage [%]	2.00	2.00	2.00	2.00	2.00	2.00	2.00	2.00	2.00	2.00	2.00	2.00
Growth Rate	1.00	1.00	1.00	1.00	1.00	1.00	1.00	1.00	1.00	1.00	1.00	1.00
In-Process Volume [veh/h]	0	0	0	0	0	0	0	0	0	0	0	0
Site-Generated Trips [veh/h]	0	0	0	0	0	0	0	0	0	0	0	0
Diverted Trips [veh/h]	0	0	0	0	0	0	0	0	0	0	0	0
Pass-by Trips [veh/h]	0	0	0	0	0	0	0	0	0	0	0	0
Existing Site Adjustment Volume [veh/h]	0	0	0	0	0	0	0	0	0	0	0	0
Other Volume [veh/h]	0	0	0	0	0	0	0	0	0	0	0	0
Total Hourly Volume [veh/h]	53	1015	115	168	1133	41	10	0	13	24	0	35
Peak Hour Factor	1.0000	1.0000	1.0000	1.0000	1.0000	1.0000	1.0000	1.0000	1.0000	1.0000	1.0000	1.0000
Other Adjustment Factor	1.0000	1.0000	1.0000	1.0000	1.0000	1.0000	1.0000	1.0000	1.0000	1.0000	1.0000	1.0000
Total 15-Minute Volume [veh/h]	13	254	29	42	283	10	3	0	3	6	0	9
Total Analysis Volume [veh/h]	53	1015	115	168	1133	41	10	0	13	24	0	35
Pedestrian Volume [ped/h]	0			0			0			0		
Bicycle Volume [bicycles/h]	0			0			0			0		

Intersection Settings

Cycle Length [s]	100
Lost time [s]	10.00

Phasing & Timing

Control Type	Protecte	Permiss	Permiss	Protecte	Permiss	Permiss	Permiss	Permiss	Permiss	Permiss	Permiss	Permiss
Signal group	5	2	0	1	6	0	3	0	0	7	0	0
Auxiliary Signal Groups												
Lead / Lag	Lead	-	-	Lead	-	-	Lead	-	-	Lead	-	-

Movement, Approach, & Intersection Results

V/C, Movement V/C Ratio	0.03	0.32	0.07	0.11	0.35	0.03	0.01	0.00	0.01	0.02	0.00	0.05
Intersection LOS	A											
Intersection V/C	0.565											

Intersection Level Of Service Report
Intersection 14: Irwindale Avenue (NS) at 1st Street (EW)

Control Type:	Signalized	Delay (sec / veh):	-
Analysis Method:	ICU 1	Level Of Service:	A
Analysis Period:	15 minutes	Volume to Capacity (v/c):	0.503

Intersection Setup

Name	Irwindale Avenue			Irwindale Avenue			1st Street			1st Street		
Approach	Northbound			Southbound			Eastbound			Westbound		
Lane Configuration												
Turning Movement	Left	Thru	Right	Left	Thru	Right	Left	Thru	Right	Left	Thru	Right
Lane Width [ft]	12.00	12.00	12.00	12.00	12.00	12.00	12.00	12.00	12.00	12.00	12.00	12.00
No. of Lanes in Pocket	1	0	1	1	0	1	1	0	1	1	0	1
Pocket Length [ft]	100.00	100.00	70.00	120.00	100.00	240.00	90.00	100.00	95.00	75.00	100.00	75.00
Speed [mph]	35.00			35.00			35.00			25.00		
Grade [%]	0.00			0.00			0.00			0.00		
Crosswalk	Yes			No			Yes			Yes		

Volumes

Name	Irwindale Avenue			Irwindale Avenue			1st Street			1st Street		
Base Volume Input [veh/h]	38	1187	4	14	827	130	54	0	21	0	0	8
Base Volume Adjustment Factor	1.0000	1.0000	1.0000	1.0000	1.0000	1.0000	1.0000	1.0000	1.0000	1.0000	1.0000	1.0000
Heavy Vehicles Percentage [%]	2.00	2.00	2.00	2.00	2.00	2.00	2.00	2.00	2.00	2.00	2.00	2.00
Growth Rate	1.00	1.00	1.00	1.00	1.00	1.00	1.00	1.00	1.00	1.00	1.00	1.00
In-Process Volume [veh/h]	0	0	0	0	0	0	0	0	0	0	0	0
Site-Generated Trips [veh/h]	0	0	0	0	0	0	0	0	0	0	0	0
Diverted Trips [veh/h]	0	0	0	0	0	0	0	0	0	0	0	0
Pass-by Trips [veh/h]	0	0	0	0	0	0	0	0	0	0	0	0
Existing Site Adjustment Volume [veh/h]	0	0	0	0	0	0	0	0	0	0	0	0
Other Volume [veh/h]	0	0	0	0	0	0	0	0	0	0	0	0
Total Hourly Volume [veh/h]	38	1187	4	14	827	130	54	0	21	0	0	8
Peak Hour Factor	1.0000	1.0000	1.0000	1.0000	1.0000	1.0000	1.0000	1.0000	1.0000	1.0000	1.0000	1.0000
Other Adjustment Factor	1.0000	1.0000	1.0000	1.0000	1.0000	1.0000	1.0000	1.0000	1.0000	1.0000	1.0000	1.0000
Total 15-Minute Volume [veh/h]	10	297	1	4	207	33	14	0	5	0	0	2
Total Analysis Volume [veh/h]	38	1187	4	14	827	130	54	0	21	0	0	8
Pedestrian Volume [ped/h]	0			0			0			0		
Bicycle Volume [bicycles/h]	0			0			0			0		

Intersection Settings

Cycle Length [s]	100
Lost time [s]	10.00

Phasing & Timing

Control Type	Permiss	Permiss	Permiss	Permiss	Permiss	Permiss	Split	Split	Split	Split	Split	Split
Signal group	0	2	0	0	6	0	0	8	0	0	4	0
Auxiliary Signal Groups												
Lead / Lag	-	-	-	-	-	-	-	-	-	-	-	-

Movement, Approach, & Intersection Results

V/C, Movement V/C Ratio	0.02	0.37	0.37	0.01	0.17	0.08	0.02	0.00	0.01	0.00	0.00	0.01
Intersection LOS	A											
Intersection V/C	0.503											

Intersection Level Of Service Report
Intersection 15: Irwindale Avenue (NS) at Gladstone Street (EW)

Control Type:	Signalized	Delay (sec / veh):	-
Analysis Method:	ICU 1	Level Of Service:	B
Analysis Period:	15 minutes	Volume to Capacity (v/c):	0.644

Intersection Setup

Name	Irwindale Avenue			Irwindale Avenue			Gladstone Street			Gladstone Street		
Approach	Northbound			Southbound			Eastbound			Westbound		
Lane Configuration												
Turning Movement	Left	Thru	Right	Left	Thru	Right	Left	Thru	Right	Left	Thru	Right
Lane Width [ft]	12.00	12.00	12.00	12.00	12.00	12.00	12.00	12.00	12.00	12.00	12.00	12.00
No. of Lanes in Pocket	1	0	0	2	0	0	1	0	0	1	0	1
Pocket Length [ft]	120.00	100.00	100.00	210.00	100.00	100.00	50.00	100.00	100.00	200.00	100.00	190.00
Speed [mph]	35.00			35.00			25.00			40.00		
Grade [%]	0.00			0.00			0.00			0.00		
Crosswalk	Yes			Yes			Yes			Yes		

Volumes

Name	Irwindale Avenue			Irwindale Avenue			Gladstone Street			Gladstone Street		
Base Volume Input [veh/h]	10	634	67	135	551	6	1	10	22	456	70	680
Base Volume Adjustment Factor	1.0000	1.0000	1.0000	1.0000	1.0000	1.0000	1.0000	1.0000	1.0000	1.0000	1.0000	1.0000
Heavy Vehicles Percentage [%]	2.00	2.00	2.00	2.00	2.00	2.00	2.00	2.00	2.00	2.00	2.00	2.00
Growth Rate	1.00	1.00	1.00	1.00	1.00	1.00	1.00	1.00	1.00	1.00	1.00	1.00
In-Process Volume [veh/h]	0	0	0	0	0	0	0	0	0	0	0	0
Site-Generated Trips [veh/h]	0	0	0	0	0	0	0	0	0	0	0	0
Diverted Trips [veh/h]	0	0	0	0	0	0	0	0	0	0	0	0
Pass-by Trips [veh/h]	0	0	0	0	0	0	0	0	0	0	0	0
Existing Site Adjustment Volume [veh/h]	0	0	0	0	0	0	0	0	0	0	0	0
Other Volume [veh/h]	0	0	0	0	0	0	0	0	0	0	0	0
Total Hourly Volume [veh/h]	10	634	67	135	551	6	1	10	22	456	70	680
Peak Hour Factor	1.0000	1.0000	1.0000	1.0000	1.0000	1.0000	1.0000	1.0000	1.0000	1.0000	1.0000	1.0000
Other Adjustment Factor	1.0000	1.0000	1.0000	1.0000	1.0000	1.0000	1.0000	1.0000	1.0000	1.0000	1.0000	1.0000
Total 15-Minute Volume [veh/h]	3	159	17	34	138	2	0	3	6	114	18	170
Total Analysis Volume [veh/h]	10	634	67	135	551	6	1	10	22	456	70	680
Pedestrian Volume [ped/h]	0			0			0			0		
Bicycle Volume [bicycles/h]	0			0			0			0		

Intersection Settings

Cycle Length [s]	100
Lost time [s]	10.00

Phasing & Timing

Control Type	Protecte	Permiss	Permiss	Protecte	Permiss	Permiss	Permiss	Permiss	Permiss	Permiss	Permiss	Overlap
Signal group	5	2	0	1	6	0	0	8	0	0	4	4
Auxiliary Signal Groups												1,4
Lead / Lag	Lead	-	-	Lead	-	-	-	-	-	-	-	-

Movement, Approach, & Intersection Results

V/C, Movement V/C Ratio	0.01	0.20	0.04	0.04	0.17	0.17	0.00	0.01	0.01	0.29	0.04	0.17
Intersection LOS	B											
Intersection V/C	0.644											

Intersection Level Of Service Report
Intersection 16: Irwindale Avenue (NS) at Arrow Highway (EW)

Control Type:	Signalized	Delay (sec / veh):	-
Analysis Method:	ICU 1	Level Of Service:	D
Analysis Period:	15 minutes	Volume to Capacity (v/c):	0.840

Intersection Setup

Name	Irwindale Avenue			Irwindale Avenue			Arrow Highway			Arrow Highway		
Approach	Northbound			Southbound			Eastbound			Westbound		
Lane Configuration												
Turning Movement	Left	Thru	Right	Left	Thru	Right	Left	Thru	Right	Left	Thru	Right
Lane Width [ft]	12.00	12.00	12.00	12.00	12.00	12.00	12.00	12.00	12.00	12.00	12.00	12.00
No. of Lanes in Pocket	1	0	0	1	0	1	2	0	0	1	0	0
Pocket Length [ft]	175.00	100.00	100.00	185.00	100.00	185.00	205.00	100.00	100.00	335.00	100.00	100.00
Speed [mph]	35.00			35.00			45.00			45.00		
Grade [%]	0.00			0.00			0.00			0.00		
Crosswalk	Yes			Yes			Yes			Yes		

Volumes

Name	Irwindale Avenue			Irwindale Avenue			Arrow Highway			Arrow Highway		
Base Volume Input [veh/h]	163	579	65	98	457	446	277	423	52	67	1022	98
Base Volume Adjustment Factor	1.0000	1.0000	1.0000	1.0000	1.0000	1.0000	1.0000	1.0000	1.0000	1.0000	1.0000	1.0000
Heavy Vehicles Percentage [%]	2.00	2.00	2.00	2.00	2.00	2.00	2.00	2.00	2.00	2.00	2.00	2.00
Growth Rate	1.00	1.00	1.00	1.00	1.00	1.00	1.00	1.00	1.00	1.00	1.00	1.00
In-Process Volume [veh/h]	0	0	0	0	0	0	0	0	0	0	0	0
Site-Generated Trips [veh/h]	0	0	0	0	0	0	0	0	0	0	0	0
Diverted Trips [veh/h]	0	0	0	0	0	0	0	0	0	0	0	0
Pass-by Trips [veh/h]	0	0	0	0	0	0	0	0	0	0	0	0
Existing Site Adjustment Volume [veh/h]	0	0	0	0	0	0	0	0	0	0	0	0
Other Volume [veh/h]	0	0	0	0	0	0	0	0	0	0	0	0
Total Hourly Volume [veh/h]	163	579	65	98	457	446	277	423	52	67	1022	98
Peak Hour Factor	1.0000	1.0000	1.0000	1.0000	1.0000	1.0000	1.0000	1.0000	1.0000	1.0000	1.0000	1.0000
Other Adjustment Factor	1.0000	1.0000	1.0000	1.0000	1.0000	1.0000	1.0000	1.0000	1.0000	1.0000	1.0000	1.0000
Total 15-Minute Volume [veh/h]	41	145	16	25	114	112	69	106	13	17	256	25
Total Analysis Volume [veh/h]	163	579	65	98	457	446	277	423	52	67	1022	98
Pedestrian Volume [ped/h]	0			0			0			0		
Bicycle Volume [bicycles/h]	0			0			0			0		

Intersection Settings

Cycle Length [s]	100
Lost time [s]	10.00

Phasing & Timing

Control Type	Protecte	Permiss	Permiss	Protecte	Permiss	Overlap	Protecte	Permiss	Permiss	Protecte	Permiss	Permiss
Signal group	5	2	0	1	6	6	3	8	0	7	4	0
Auxiliary Signal Groups						3,6						
Lead / Lag	Lead	-	-	Lead	-	-	Lead	-	-	Lead	-	-

Movement, Approach, & Intersection Results

V/C, Movement V/C Ratio	0.10	0.20	0.20	0.06	0.14	0.19	0.09	0.10	0.10	0.04	0.35	0.35
Intersection LOS	D											
Intersection V/C	0.840											

Intersection Level Of Service Report
Intersection 17: Vincent Avenue (NS) at Gladstone Street (EW)

Control Type:	Signalized	Delay (sec / veh):	-
Analysis Method:	ICU 1	Level Of Service:	A
Analysis Period:	15 minutes	Volume to Capacity (v/c):	0.521

Intersection Setup

Name	Vincent Avenue			Vincent Avenue			Gladstone Street			Gladstone Street		
Approach	Northbound			Southbound			Eastbound			Westbound		
Lane Configuration												
Turning Movement	Left	Thru	Right	Left	Thru	Right	Left	Thru	Right	Left	Thru	Right
Lane Width [ft]	12.00	12.00	12.00	12.00	12.00	12.00	12.00	12.00	12.00	12.00	12.00	12.00
No. of Lanes in Pocket	1	0	0	0	0	0	2	0	0	1	0	0
Pocket Length [ft]	195.00	100.00	100.00	100.00	100.00	100.00	230.00	100.00	100.00	175.00	100.00	100.00
Speed [mph]	45.00			25.00			45.00			45.00		
Grade [%]	0.00			0.00			0.00			0.00		
Crosswalk	Yes			Yes			No			Yes		

Volumes

Name	Vincent Avenue			Vincent Avenue			Gladstone Street			Gladstone Street		
Base Volume Input [veh/h]	265	29	147	16	8	38	43	97	64	178	942	2
Base Volume Adjustment Factor	1.0000	1.0000	1.0000	1.0000	1.0000	1.0000	1.0000	1.0000	1.0000	1.0000	1.0000	1.0000
Heavy Vehicles Percentage [%]	2.00	2.00	2.00	2.00	2.00	2.00	2.00	2.00	2.00	2.00	2.00	2.00
Growth Rate	1.00	1.00	1.00	1.00	1.00	1.00	1.00	1.00	1.00	1.00	1.00	1.00
In-Process Volume [veh/h]	0	0	0	0	0	0	0	0	0	0	0	0
Site-Generated Trips [veh/h]	0	0	0	0	0	0	0	0	0	0	0	0
Diverted Trips [veh/h]	0	0	0	0	0	0	0	0	0	0	0	0
Pass-by Trips [veh/h]	0	0	0	0	0	0	0	0	0	0	0	0
Existing Site Adjustment Volume [veh/h]	0	0	0	0	0	0	0	0	0	0	0	0
Other Volume [veh/h]	0	0	0	0	0	0	0	0	0	0	0	0
Total Hourly Volume [veh/h]	265	29	147	16	8	38	43	97	64	178	942	2
Peak Hour Factor	1.0000	1.0000	1.0000	1.0000	1.0000	1.0000	1.0000	1.0000	1.0000	1.0000	1.0000	1.0000
Other Adjustment Factor	1.0000	1.0000	1.0000	1.0000	1.0000	1.0000	1.0000	1.0000	1.0000	1.0000	1.0000	1.0000
Total 15-Minute Volume [veh/h]	66	7	37	4	2	10	11	24	16	45	236	1
Total Analysis Volume [veh/h]	265	29	147	16	8	38	43	97	64	178	942	2
Pedestrian Volume [ped/h]	0			0			0			0		
Bicycle Volume [bicycles/h]	0			0			0			0		

Intersection Settings

Cycle Length [s]	100
Lost time [s]	10.00

Phasing & Timing

Control Type	Split	Split	Split	Split	Split	Split	Protecte	Permiss	Permiss	Protecte	Permiss	Permiss
Signal group	0	2	0	0	6	0	3	8	0	7	4	0
Auxiliary Signal Groups												
Lead / Lag	-	-	-	-	-	-	Lead	-	-	Lead	-	-

Movement, Approach, & Intersection Results

V/C, Movement V/C Ratio	0.08	0.09	0.09	0.01	0.03	0.03	0.01	0.05	0.05	0.11	0.30	0.30
Intersection LOS	A											
Intersection V/C	0.521											

Intersection Level Of Service Report
Intersection 18: Vincent Avenue (NS) at Arrow Highway (EW)

Control Type:	Signalized	Delay (sec / veh):	-
Analysis Method:	ICU 1	Level Of Service:	B
Analysis Period:	15 minutes	Volume to Capacity (v/c):	0.676

Intersection Setup

Name	Vincent Avenue			Vincent Avenue			Arrow Highway			Arrow Highway		
Approach	Northbound			Southbound			Eastbound			Westbound		
Lane Configuration												
Turning Movement	Left	Thru	Right	Left	Thru	Right	Left	Thru	Right	Left	Thru	Right
Lane Width [ft]	12.00	12.00	12.00	12.00	12.00	12.00	12.00	12.00	12.00	12.00	12.00	12.00
No. of Lanes in Pocket	1	0	0	1	0	0	1	0	0	1	0	0
Pocket Length [ft]	200.00	100.00	100.00	200.00	100.00	100.00	215.00	100.00	100.00	160.00	100.00	100.00
Speed [mph]	45.00			45.00			45.00			45.00		
Grade [%]	0.00			0.00			0.00			0.00		
Crosswalk	Yes			Yes			Yes			Yes		

Volumes

Name	Vincent Avenue			Vincent Avenue			Arrow Highway			Arrow Highway		
Base Volume Input [veh/h]	161	285	88	22	189	65	58	378	88	138	1150	89
Base Volume Adjustment Factor	1.0000	1.0000	1.0000	1.0000	1.0000	1.0000	1.0000	1.0000	1.0000	1.0000	1.0000	1.0000
Heavy Vehicles Percentage [%]	2.00	2.00	2.00	2.00	2.00	2.00	2.00	2.00	2.00	2.00	2.00	2.00
Growth Rate	1.00	1.00	1.00	1.00	1.00	1.00	1.00	1.00	1.00	1.00	1.00	1.00
In-Process Volume [veh/h]	0	0	0	0	0	0	0	0	0	0	0	0
Site-Generated Trips [veh/h]	0	0	0	0	0	0	0	0	0	0	0	0
Diverted Trips [veh/h]	0	0	0	0	0	0	0	0	0	0	0	0
Pass-by Trips [veh/h]	0	0	0	0	0	0	0	0	0	0	0	0
Existing Site Adjustment Volume [veh/h]	0	0	0	0	0	0	0	0	0	0	0	0
Other Volume [veh/h]	0	0	0	0	0	0	0	0	0	0	0	0
Total Hourly Volume [veh/h]	161	285	88	22	189	65	58	378	88	138	1150	89
Peak Hour Factor	1.0000	1.0000	1.0000	1.0000	1.0000	1.0000	1.0000	1.0000	1.0000	1.0000	1.0000	1.0000
Other Adjustment Factor	1.0000	1.0000	1.0000	1.0000	1.0000	1.0000	1.0000	1.0000	1.0000	1.0000	1.0000	1.0000
Total 15-Minute Volume [veh/h]	40	71	22	6	47	16	15	95	22	35	288	22
Total Analysis Volume [veh/h]	161	285	88	22	189	65	58	378	88	138	1150	89
Pedestrian Volume [ped/h]	0			0			0			0		
Bicycle Volume [bicycles/h]	0			0			0			0		

Intersection Settings

Cycle Length [s]	100
Lost time [s]	10.00

Phasing & Timing

Control Type	Permiss	Permiss	Permiss	Permiss	Permiss	Permiss	Permiss	Permiss	Permiss	Permiss	Permiss	Permiss
Signal group	0	2	0	0	6	0	0	8	0	0	4	0
Auxiliary Signal Groups												
Lead / Lag	-	-	-	-	-	-	-	-	-	-	-	-

Movement, Approach, & Intersection Results

V/C, Movement V/C Ratio	0.10	0.12	0.12	0.01	0.08	0.08	0.04	0.12	0.06	0.09	0.36	0.06
Intersection LOS	B											
Intersection V/C	0.676											

Intersection Level Of Service Report
Intersection 21: Vincent Avenue (NS) at Cypress Street (EW)

Control Type:	Signalized	Delay (sec / veh):	-
Analysis Method:	ICU 1	Level Of Service:	B
Analysis Period:	15 minutes	Volume to Capacity (v/c):	0.641

Intersection Setup

Name	Vincent Avenue			Vincent Avenue			Cypress Street			Cypress Street		
Approach	Northbound			Southbound			Eastbound			Westbound		
Lane Configuration												
Turning Movement	Left	Thru	Right	Left	Thru	Right	Left	Thru	Right	Left	Thru	Right
Lane Width [ft]	12.00	12.00	12.00	12.00	12.00	12.00	12.00	12.00	12.00	12.00	12.00	12.00
No. of Lanes in Pocket	1	0	0	1	0	0	1	0	0	1	0	0
Pocket Length [ft]	120.00	100.00	100.00	120.00	100.00	100.00	100.00	100.00	100.00	150.00	100.00	100.00
Speed [mph]	40.00			45.00			40.00			40.00		
Grade [%]	0.00			0.00			0.00			0.00		
Crosswalk	Yes			Yes			Yes			Yes		

Volumes

Name	Vincent Avenue			Vincent Avenue			Cypress Street			Cypress Street		
Base Volume Input [veh/h]	162	467	125	65	398	71	34	303	50	190	792	78
Base Volume Adjustment Factor	1.0000	1.0000	1.0000	1.0000	1.0000	1.0000	1.0000	1.0000	1.0000	1.0000	1.0000	1.0000
Heavy Vehicles Percentage [%]	2.00	2.00	2.00	2.00	2.00	2.00	2.00	2.00	2.00	2.00	2.00	2.00
Growth Rate	1.00	1.00	1.00	1.00	1.00	1.00	1.00	1.00	1.00	1.00	1.00	1.00
In-Process Volume [veh/h]	0	0	0	0	0	0	0	0	0	0	0	0
Site-Generated Trips [veh/h]	0	0	0	0	0	0	0	0	0	0	0	0
Diverted Trips [veh/h]	0	0	0	0	0	0	0	0	0	0	0	0
Pass-by Trips [veh/h]	0	0	0	0	0	0	0	0	0	0	0	0
Existing Site Adjustment Volume [veh/h]	0	0	0	0	0	0	0	0	0	0	0	0
Other Volume [veh/h]	0	0	0	0	0	0	0	0	0	0	0	0
Total Hourly Volume [veh/h]	162	467	125	65	398	71	34	303	50	190	792	78
Peak Hour Factor	1.0000	1.0000	1.0000	1.0000	1.0000	1.0000	1.0000	1.0000	1.0000	1.0000	1.0000	1.0000
Other Adjustment Factor	1.0000	1.0000	1.0000	1.0000	1.0000	1.0000	1.0000	1.0000	1.0000	1.0000	1.0000	1.0000
Total 15-Minute Volume [veh/h]	41	117	31	16	100	18	9	76	13	48	198	20
Total Analysis Volume [veh/h]	162	467	125	65	398	71	34	303	50	190	792	78
Pedestrian Volume [ped/h]	0			0			0			0		
Bicycle Volume [bicycles/h]	0			0			0			0		

Intersection Settings

Cycle Length [s]	100
Lost time [s]	10.00

Phasing & Timing

Control Type	Permiss	Permiss	Permiss	Permiss	Permiss	Permiss	Permiss	Permiss	Permiss	Permiss	Permiss	Permiss
Signal group	0	2	0	0	6	0	0	8	0	0	4	0
Auxiliary Signal Groups												
Lead / Lag	-	-	-	-	-	-	-	-	-	-	-	-

Movement, Approach, & Intersection Results

V/C, Movement V/C Ratio	0.10	0.19	0.19	0.04	0.15	0.15	0.02	0.11	0.11	0.12	0.27	0.27
Intersection LOS	B											
Intersection V/C	0.641											

Intersection Level Of Service Report

Intersection 22: Vincent Avenue (NS) at San Bernardino Road (EW)

Control Type:	Signalized	Delay (sec / veh):	-
Analysis Method:	ICU 1	Level Of Service:	B
Analysis Period:	15 minutes	Volume to Capacity (v/c):	0.650

Intersection Setup

Name	Vincent Avenue			Vincent Avenue			San Bernardino Road			San Berardino Road		
Approach	Northbound			Southbound			Eastbound			Westbound		
Lane Configuration												
Turning Movement	Left	Thru	Right	Left	Thru	Right	Left	Thru	Right	Left	Thru	Right
Lane Width [ft]	12.00	12.00	12.00	12.00	12.00	12.00	12.00	12.00	12.00	12.00	12.00	12.00
No. of Lanes in Pocket	1	0	0	1	0	0	1	0	0	1	0	0
Pocket Length [ft]	120.00	100.00	100.00	150.00	100.00	100.00	150.00	100.00	100.00	165.00	100.00	100.00
Speed [mph]	35.00			40.00			40.00			40.00		
Grade [%]	0.00			0.00			0.00			0.00		
Crosswalk	Yes			Yes			Yes			Yes		

Volumes

Name	Vincent Avenue			Vincent Avenue			San Bernardino Road			San Berardino Road		
Base Volume Input [veh/h]	106	546	50	70	556	99	82	330	67	99	597	131
Base Volume Adjustment Factor	1.0000	1.0000	1.0000	1.0000	1.0000	1.0000	1.0000	1.0000	1.0000	1.0000	1.0000	1.0000
Heavy Vehicles Percentage [%]	2.00	2.00	2.00	2.00	2.00	2.00	2.00	2.00	2.00	2.00	2.00	2.00
Growth Rate	1.00	1.00	1.00	1.00	1.00	1.00	1.00	1.00	1.00	1.00	1.00	1.00
In-Process Volume [veh/h]	0	0	0	0	0	0	0	0	0	0	0	0
Site-Generated Trips [veh/h]	0	0	0	0	0	0	0	0	0	0	0	0
Diverted Trips [veh/h]	0	0	0	0	0	0	0	0	0	0	0	0
Pass-by Trips [veh/h]	0	0	0	0	0	0	0	0	0	0	0	0
Existing Site Adjustment Volume [veh/h]	0	0	0	0	0	0	0	0	0	0	0	0
Other Volume [veh/h]	0	0	0	0	0	0	0	0	0	0	0	0
Total Hourly Volume [veh/h]	106	546	50	70	556	99	82	330	67	99	597	131
Peak Hour Factor	1.0000	1.0000	1.0000	1.0000	1.0000	1.0000	1.0000	1.0000	1.0000	1.0000	1.0000	1.0000
Other Adjustment Factor	1.0000	1.0000	1.0000	1.0000	1.0000	1.0000	1.0000	1.0000	1.0000	1.0000	1.0000	1.0000
Total 15-Minute Volume [veh/h]	27	137	13	18	139	25	21	83	17	25	149	33
Total Analysis Volume [veh/h]	106	546	50	70	556	99	82	330	67	99	597	131
Pedestrian Volume [ped/h]	0			0			0			0		
Bicycle Volume [bicycles/h]	0			0			0			0		

Intersection Settings

Cycle Length [s]	100
Lost time [s]	10.00

Phasing & Timing

Control Type	Permiss	Permiss	Permiss	Permiss	Permiss	Permiss	Protecte	Permiss	Permiss	Protecte	Permiss	Permiss
Signal group	0	2	0	0	6	0	3	8	0	7	4	0
Auxiliary Signal Groups												
Lead / Lag	-	-	-	-	-	-	Lead	-	-	Lead	-	-

Movement, Approach, & Intersection Results

V/C, Movement V/C Ratio	0.07	0.19	0.19	0.04	0.20	0.20	0.05	0.12	0.12	0.06	0.23	0.23
Intersection LOS	B											
Intersection V/C	0.650											

Intersection Level Of Service Report
Intersection 23: Vincent Avenue (NS) at Badillo Street (EW)

Control Type:	Signalized	Delay (sec / veh):	-
Analysis Method:	ICU 1	Level Of Service:	B
Analysis Period:	15 minutes	Volume to Capacity (v/c):	0.607

Intersection Setup

Name	Vincent Avenue			Vincent Avenue			Dadillo Street			Badillo Street		
Approach	Northbound			Southbound			Eastbound			Westbound		
Lane Configuration												
Turning Movement	Left	Thru	Right	Left	Thru	Right	Left	Thru	Right	Left	Thru	Right
Lane Width [ft]	12.00	12.00	12.00	12.00	12.00	12.00	12.00	12.00	12.00	12.00	12.00	12.00
No. of Lanes in Pocket	1	0	0	1	0	0	1	0	0	1	0	0
Pocket Length [ft]	200.00	100.00	100.00	190.00	100.00	100.00	195.00	100.00	100.00	195.00	100.00	100.00
Speed [mph]	40.00			35.00			45.00			45.00		
Grade [%]	0.00			0.00			0.00			0.00		
Crosswalk	Yes			Yes			Yes			Yes		

Volumes

Name	Vincent Avenue			Vincent Avenue			Dadillo Street			Badillo Street		
Base Volume Input [veh/h]	105	629	177	42	580	121	31	506	113	110	770	88
Base Volume Adjustment Factor	1.0000	1.0000	1.0000	1.0000	1.0000	1.0000	1.0000	1.0000	1.0000	1.0000	1.0000	1.0000
Heavy Vehicles Percentage [%]	2.00	2.00	2.00	2.00	2.00	2.00	2.00	2.00	2.00	2.00	2.00	2.00
Growth Rate	1.00	1.00	1.00	1.00	1.00	1.00	1.00	1.00	1.00	1.00	1.00	1.00
In-Process Volume [veh/h]	0	0	0	0	0	0	0	0	0	0	0	0
Site-Generated Trips [veh/h]	0	0	0	0	0	0	0	0	0	0	0	0
Diverted Trips [veh/h]	0	0	0	0	0	0	0	0	0	0	0	0
Pass-by Trips [veh/h]	0	0	0	0	0	0	0	0	0	0	0	0
Existing Site Adjustment Volume [veh/h]	0	0	0	0	0	0	0	0	0	0	0	0
Other Volume [veh/h]	0	0	0	0	0	0	0	0	0	0	0	0
Total Hourly Volume [veh/h]	105	629	177	42	580	121	31	506	113	110	770	88
Peak Hour Factor	1.0000	1.0000	1.0000	1.0000	1.0000	1.0000	1.0000	1.0000	1.0000	1.0000	1.0000	1.0000
Other Adjustment Factor	1.0000	1.0000	1.0000	1.0000	1.0000	1.0000	1.0000	1.0000	1.0000	1.0000	1.0000	1.0000
Total 15-Minute Volume [veh/h]	26	157	44	11	145	30	8	127	28	28	193	22
Total Analysis Volume [veh/h]	105	629	177	42	580	121	31	506	113	110	770	88
Pedestrian Volume [ped/h]	0			0			0			0		
Bicycle Volume [bicycles/h]	0			0			0			0		

Intersection Settings

Cycle Length [s]	100
Lost time [s]	10.00

Phasing & Timing

Control Type	Protecte	Permiss	Permiss	Protecte	Permiss	Permiss	Protecte	Permiss	Permiss	Protecte	Permiss	Permiss
Signal group	5	2	0	1	6	0	3	8	0	7	4	0
Auxiliary Signal Groups												
Lead / Lag	Lead	-	-	Lead	-	-	Lead	-	-	Lead	-	-

Movement, Approach, & Intersection Results

V/C, Movement V/C Ratio	0.07	0.20	0.11	0.03	0.18	0.08	0.02	0.16	0.07	0.07	0.24	0.06
Intersection LOS	B											
Intersection V/C	0.607											

Intersection Level Of Service Report
Intersection 24: Vincent Avenue (NS) at Puente Avenue (EW)

Control Type:	Signalized	Delay (sec / veh):	-
Analysis Method:	ICU 1	Level Of Service:	A
Analysis Period:	15 minutes	Volume to Capacity (v/c):	0.576

Intersection Setup

Name	Vincent Avenue			Vincent Avenue			Puente Avenue			Puente Avenue		
Approach	Northbound			Southbound			Eastbound			Westbound		
Lane Configuration												
Turning Movement	Left	Thru	Right	Left	Thru	Right	Left	Thru	Right	Left	Thru	Right
Lane Width [ft]	12.00	12.00	12.00	12.00	12.00	12.00	12.00	12.00	12.00	12.00	12.00	12.00
No. of Lanes in Pocket	1	0	0	1	0	0	0	0	0	0	0	0
Pocket Length [ft]	195.00	100.00	100.00	195.00	100.00	100.00	100.00	100.00	100.00	100.00	100.00	100.00
Speed [mph]	40.00			40.00			40.00			40.00		
Grade [%]	0.00			0.00			0.00			0.00		
Crosswalk	Yes			Yes			Yes			Yes		

Volumes

Name	Vincent Avenue			Vincent Avenue			Puente Avenue			Puente Avenue		
Base Volume Input [veh/h]	67	687	31	57	660	69	42	349	66	74	563	96
Base Volume Adjustment Factor	1.0000	1.0000	1.0000	1.0000	1.0000	1.0000	1.0000	1.0000	1.0000	1.0000	1.0000	1.0000
Heavy Vehicles Percentage [%]	2.00	2.00	2.00	2.00	2.00	2.00	2.00	2.00	2.00	2.00	2.00	2.00
Growth Rate	1.00	1.00	1.00	1.00	1.00	1.00	1.00	1.00	1.00	1.00	1.00	1.00
In-Process Volume [veh/h]	0	0	0	0	0	0	0	0	0	0	0	0
Site-Generated Trips [veh/h]	0	0	0	0	0	0	0	0	0	0	0	0
Diverted Trips [veh/h]	0	0	0	0	0	0	0	0	0	0	0	0
Pass-by Trips [veh/h]	0	0	0	0	0	0	0	0	0	0	0	0
Existing Site Adjustment Volume [veh/h]	0	0	0	0	0	0	0	0	0	0	0	0
Other Volume [veh/h]	0	0	0	0	0	0	0	0	0	0	0	0
Total Hourly Volume [veh/h]	67	687	31	57	660	69	42	349	66	74	563	96
Peak Hour Factor	1.0000	1.0000	1.0000	1.0000	1.0000	1.0000	1.0000	1.0000	1.0000	1.0000	1.0000	1.0000
Other Adjustment Factor	1.0000	1.0000	1.0000	1.0000	1.0000	1.0000	1.0000	1.0000	1.0000	1.0000	1.0000	1.0000
Total 15-Minute Volume [veh/h]	17	172	8	14	165	17	11	87	17	19	141	24
Total Analysis Volume [veh/h]	67	687	31	57	660	69	42	349	66	74	563	96
Pedestrian Volume [ped/h]	0			0			0			0		
Bicycle Volume [bicycles/h]	0			0			0			0		

Intersection Settings

Cycle Length [s]	100
Lost time [s]	10.00

Phasing & Timing

Control Type	Permiss	Permiss	Permiss	Permiss	Permiss	Permiss	Permiss	Permiss	Permiss	Permiss	Permiss	Permiss
Signal group	0	2	0	0	6	0	0	8	0	0	4	0
Auxiliary Signal Groups												
Lead / Lag	-	-	-	-	-	-	-	-	-	-	-	-

Movement, Approach, & Intersection Results

V/C, Movement V/C Ratio	0.04	0.21	0.02	0.04	0.21	0.04	0.03	0.12	0.04	0.05	0.20	0.06
Intersection LOS	A											
Intersection V/C	0.576											

Intersection Level Of Service Report
Intersection 25: Vincent Avenue (NS) at Rowland Avenue (EW)

Control Type:	Signalized	Delay (sec / veh):	-
Analysis Method:	ICU 1	Level Of Service:	A
Analysis Period:	15 minutes	Volume to Capacity (v/c):	0.535

Intersection Setup

Name	Vincent Avenue			Vincent Avenue			Rowland Avenue			Rowland Avenue		
Approach	Northbound			Southbound			Eastbound			Westbound		
Lane Configuration												
Turning Movement	Left	Thru	Right	Left	Thru	Right	Left	Thru	Right	Left	Thru	Right
Lane Width [ft]	12.00	12.00	12.00	12.00	12.00	12.00	12.00	12.00	12.00	12.00	12.00	12.00
No. of Lanes in Pocket	1	0	0	1	0	0	0	0	0	0	0	0
Pocket Length [ft]	145.00	100.00	100.00	125.00	100.00	100.00	100.00	100.00	100.00	100.00	100.00	100.00
Speed [mph]	35.00			40.00			35.00			35.00		
Grade [%]	0.00			0.00			0.00			0.00		
Crosswalk	Yes			Yes			Yes			Yes		

Volumes

Name	Vincent Avenue			Vincent Avenue			Rowland Avenue			Rowland Avenue		
Base Volume Input [veh/h]	34	712	55	36	756	12	32	133	41	119	131	62
Base Volume Adjustment Factor	1.0000	1.0000	1.0000	1.0000	1.0000	1.0000	1.0000	1.0000	1.0000	1.0000	1.0000	1.0000
Heavy Vehicles Percentage [%]	2.00	2.00	2.00	2.00	2.00	2.00	2.00	2.00	2.00	2.00	2.00	2.00
Growth Rate	1.00	1.00	1.00	1.00	1.00	1.00	1.00	1.00	1.00	1.00	1.00	1.00
In-Process Volume [veh/h]	0	0	0	0	0	0	0	0	0	0	0	0
Site-Generated Trips [veh/h]	0	0	0	0	0	0	0	0	0	0	0	0
Diverted Trips [veh/h]	0	0	0	0	0	0	0	0	0	0	0	0
Pass-by Trips [veh/h]	0	0	0	0	0	0	0	0	0	0	0	0
Existing Site Adjustment Volume [veh/h]	0	0	0	0	0	0	0	0	0	0	0	0
Other Volume [veh/h]	0	0	0	0	0	0	0	0	0	0	0	0
Total Hourly Volume [veh/h]	34	712	55	36	756	12	32	133	41	119	131	62
Peak Hour Factor	1.0000	1.0000	1.0000	1.0000	1.0000	1.0000	1.0000	1.0000	1.0000	1.0000	1.0000	1.0000
Other Adjustment Factor	1.0000	1.0000	1.0000	1.0000	1.0000	1.0000	1.0000	1.0000	1.0000	1.0000	1.0000	1.0000
Total 15-Minute Volume [veh/h]	9	178	14	9	189	3	8	33	10	30	33	16
Total Analysis Volume [veh/h]	34	712	55	36	756	12	32	133	41	119	131	62
Pedestrian Volume [ped/h]	0			0			0			0		
Bicycle Volume [bicycles/h]	0			0			0			0		

Intersection Settings

Cycle Length [s]	100
Lost time [s]	10.00

Phasing & Timing

Control Type	Protecte	Permiss	Permiss	Protecte	Permiss	Permiss	Permiss	Permiss	Permiss	Permiss	Permiss	Permiss
Signal group	5	2	0	1	6	0	0	8	0	0	4	0
Auxiliary Signal Groups												
Lead / Lag	Lead	-	-	Lead	-	-	-	-	-	-	-	-

Movement, Approach, & Intersection Results

V/C, Movement V/C Ratio	0.02	0.22	0.03	0.02	0.24	0.01	0.02	0.10	0.03	0.07	0.16	0.04
Intersection LOS	A											
Intersection V/C	0.535											

Intersection Level Of Service Report
Intersection 26: Vincent Avenue (NS) at Workman Avenue (EW)

Control Type:	Signalized	Delay (sec / veh):	-
Analysis Method:	ICU 1	Level Of Service:	B
Analysis Period:	15 minutes	Volume to Capacity (v/c):	0.609

Intersection Setup

Name	Vincent Avenue			Vincent Avenue			Workman Avenue			Workman Avenue		
Approach	Northbound			Southbound			Eastbound			Westbound		
Lane Configuration												
Turning Movement	Left	Thru	Right	Left	Thru	Right	Left	Thru	Right	Left	Thru	Right
Lane Width [ft]	12.00	12.00	12.00	12.00	12.00	12.00	12.00	12.00	12.00	12.00	12.00	12.00
No. of Lanes in Pocket	1	0	0	1	0	0	0	0	0	0	0	0
Pocket Length [ft]	120.00	100.00	100.00	180.00	100.00	100.00	100.00	100.00	100.00	100.00	100.00	100.00
Speed [mph]	35.00			40.00			35.00			35.00		
Grade [%]	0.00			0.00			0.00			0.00		
Crosswalk	Yes			Yes			Yes			Yes		

Volumes

Name	Vincent Avenue			Vincent Avenue			Workman Avenue			Workman Avenue		
Base Volume Input [veh/h]	67	675	110	42	816	61	21	137	49	131	188	74
Base Volume Adjustment Factor	1.0000	1.0000	1.0000	1.0000	1.0000	1.0000	1.0000	1.0000	1.0000	1.0000	1.0000	1.0000
Heavy Vehicles Percentage [%]	2.00	2.00	2.00	2.00	2.00	2.00	2.00	2.00	2.00	2.00	2.00	2.00
Growth Rate	1.00	1.00	1.00	1.00	1.00	1.00	1.00	1.00	1.00	1.00	1.00	1.00
In-Process Volume [veh/h]	0	0	0	0	0	0	0	0	0	0	0	0
Site-Generated Trips [veh/h]	0	0	0	0	0	0	0	0	0	0	0	0
Diverted Trips [veh/h]	0	0	0	0	0	0	0	0	0	0	0	0
Pass-by Trips [veh/h]	0	0	0	0	0	0	0	0	0	0	0	0
Existing Site Adjustment Volume [veh/h]	0	0	0	0	0	0	0	0	0	0	0	0
Other Volume [veh/h]	0	0	0	0	0	0	0	0	0	0	0	0
Total Hourly Volume [veh/h]	67	675	110	42	816	61	21	137	49	131	188	74
Peak Hour Factor	1.0000	1.0000	1.0000	1.0000	1.0000	1.0000	1.0000	1.0000	1.0000	1.0000	1.0000	1.0000
Other Adjustment Factor	1.0000	1.0000	1.0000	1.0000	1.0000	1.0000	1.0000	1.0000	1.0000	1.0000	1.0000	1.0000
Total 15-Minute Volume [veh/h]	17	169	28	11	204	15	5	34	12	33	47	19
Total Analysis Volume [veh/h]	67	675	110	42	816	61	21	137	49	131	188	74
Pedestrian Volume [ped/h]	0			0			0			0		
Bicycle Volume [bicycles/h]	0			0			0			0		

Intersection Settings

Cycle Length [s]	100
Lost time [s]	10.00

Phasing & Timing

Control Type	Protecte	Permiss	Permiss	Protecte	Permiss	Permiss	Permiss	Permiss	Permiss	Permiss	Permiss	Permiss
Signal group	5	2	0	1	6	0	0	8	0	0	4	0
Auxiliary Signal Groups												
Lead / Lag	Lead	-	-	Lead	-	-	-	-	-	-	-	-

Movement, Approach, & Intersection Results

V/C, Movement V/C Ratio	0.04	0.21	0.07	0.03	0.26	0.04	0.01	0.10	0.03	0.08	0.20	0.05
Intersection LOS	B											
Intersection V/C	0.609											

Intersection Level Of Service Report
Intersection 27: Vincent Avenue (NS) at I-10 WB Ramps (EW)

Control Type:	Signalized	Delay (sec / veh):	-
Analysis Method:	ICU 1	Level Of Service:	A
Analysis Period:	15 minutes	Volume to Capacity (v/c):	0.433

Intersection Setup

Name	Vincent Avenue		Vincent Avenue		I-10 WB Ramps	
Approach	Northbound		Southbound		Westbound	
Lane Configuration						
Turning Movement	Thru	Right	Left	Thru	Left	Right
Lane Width [ft]	12.00	12.00	12.00	12.00	12.00	12.00
No. of Lanes in Pocket	0	0	0	0	0	1
Pocket Length [ft]	100.00	100.00	100.00	100.00	100.00	220.00
Speed [mph]	35.00		35.00		35.00	
Grade [%]	0.00		0.00		0.00	
Crosswalk	No		No		Yes	

Volumes

Name	Vincent Avenue		Vincent Avenue		I-10 WB Ramps	
Base Volume Input [veh/h]	741	0	0	1011	393	194
Base Volume Adjustment Factor	1.0000	1.0000	1.0000	1.0000	1.0000	1.0000
Heavy Vehicles Percentage [%]	2.00	2.00	2.00	2.00	2.00	2.00
Growth Rate	1.00	1.00	1.00	1.00	1.00	1.00
In-Process Volume [veh/h]	0	0	0	0	0	0
Site-Generated Trips [veh/h]	0	0	0	0	0	0
Diverted Trips [veh/h]	0	0	0	0	0	0
Pass-by Trips [veh/h]	0	0	0	0	0	0
Existing Site Adjustment Volume [veh/h]	0	0	0	0	0	0
Other Volume [veh/h]	0	0	0	0	0	0
Total Hourly Volume [veh/h]	741	0	0	1011	393	194
Peak Hour Factor	1.0000	1.0000	1.0000	1.0000	1.0000	1.0000
Other Adjustment Factor	1.0000	1.0000	1.0000	1.0000	1.0000	1.0000
Total 15-Minute Volume [veh/h]	185	0	0	253	98	49
Total Analysis Volume [veh/h]	741	0	0	1011	393	194
Pedestrian Volume [ped/h]	0		0		0	
Bicycle Volume [bicycles/h]	0		0		0	

Intersection Settings

Cycle Length [s]	100
Lost time [s]	10.00

Phasing & Timing

Control Type	Permissive	Permissive	Permissive	Permissive	Split	Split
Signal group	2	0	0	6	7	0
Auxiliary Signal Groups						
Lead / Lag	-	-	-	-	Lead	-

Movement, Approach, & Intersection Results

V/C, Movement V/C Ratio	0.15	0.00	0.00	0.21	0.12	0.12
Intersection LOS	A					
Intersection V/C	0.433					

Intersection Level Of Service Report
Intersection 28: Vincent Avenue (NS) at I-10 EB Ramps (EW)

Control Type:	Signalized	Delay (sec / veh):	-
Analysis Method:	ICU 1	Level Of Service:	A
Analysis Period:	15 minutes	Volume to Capacity (v/c):	0.482

Intersection Setup

Name	Vincent Avenue			Vincent Avenue			I-10 EB Ramps			I-10 EB Ramps		
Approach	Northbound			Southbound			Eastbound			Westbound		
Lane Configuration												
Turning Movement	Left	Thru	Right	Left	Thru	Right	Left	Thru	Right	Left	Thru	Right
Lane Width [ft]	12.00	12.00	12.00	12.00	12.00	12.00	12.00	12.00	12.00	12.00	12.00	12.00
No. of Lanes in Pocket	0	0	0	0	0	0	0	0	0	0	0	0
Pocket Length [ft]	100.00	100.00	100.00	100.00	100.00	100.00	100.00	100.00	100.00	100.00	100.00	100.00
Speed [mph]	35.00			35.00			35.00			35.00		
Grade [%]	0.00			0.00			0.00			0.00		
Crosswalk	No			No			Yes			Yes		

Volumes

Name	Vincent Avenue			Vincent Avenue			I-10 EB Ramps			I-10 EB Ramps		
Base Volume Input [veh/h]	0	527	656	0	1045	358	217	0	243	0	0	0
Base Volume Adjustment Factor	1.0000	1.0000	1.0000	1.0000	1.0000	1.0000	1.0000	1.0000	1.0000	1.0000	1.0000	1.0000
Heavy Vehicles Percentage [%]	2.00	2.00	2.00	2.00	2.00	2.00	2.00	2.00	2.00	2.00	2.00	2.00
Growth Rate	1.00	1.00	1.00	1.00	1.00	1.00	1.00	1.00	1.00	1.00	1.00	1.00
In-Process Volume [veh/h]	0	0	0	0	0	0	0	0	0	0	0	0
Site-Generated Trips [veh/h]	0	0	0	0	0	0	0	0	0	0	0	0
Diverted Trips [veh/h]	0	0	0	0	0	0	0	0	0	0	0	0
Pass-by Trips [veh/h]	0	0	0	0	0	0	0	0	0	0	0	0
Existing Site Adjustment Volume [veh/h]	0	0	0	0	0	0	0	0	0	0	0	0
Other Volume [veh/h]	0	0	0	0	0	0	0	0	0	0	0	0
Total Hourly Volume [veh/h]	0	527	656	0	1045	358	217	0	243	0	0	0
Peak Hour Factor	1.0000	1.0000	1.0000	1.0000	1.0000	1.0000	1.0000	1.0000	1.0000	1.0000	1.0000	1.0000
Other Adjustment Factor	1.0000	1.0000	1.0000	1.0000	1.0000	1.0000	1.0000	1.0000	1.0000	1.0000	1.0000	1.0000
Total 15-Minute Volume [veh/h]	0	132	164	0	261	90	54	0	61	0	0	0
Total Analysis Volume [veh/h]	0	527	656	0	1045	358	217	0	243	0	0	0
Pedestrian Volume [ped/h]	0			0			0			0		
Bicycle Volume [bicycles/h]	0			0			0			0		

Intersection Settings

Cycle Length [s]	100
Lost time [s]	10.00

Phasing & Timing

Control Type	Permiss	Permiss	Permiss	Permiss	Permiss	Permiss	Split	Permiss	Split	Permiss	Permiss	Permiss
Signal group	0	2	0	0	6	0	3	0	0	0	0	0
Auxiliary Signal Groups												
Lead / Lag	-	-	-	-	-	-	Lead	-	-	-	-	-

Movement, Approach, & Intersection Results

V/C, Movement V/C Ratio	0.00	0.25	0.25	0.00	0.22	0.22	0.14	0.00	0.08	0.00	0.00	0.00
Intersection LOS	A											
Intersection V/C	0.482											

Intersection Level Of Service Report
Intersection 29: Vernon Ave/Lark Ellen Ave (NS) at Gladstone Street (EW)

Control Type:	Signalized	Delay (sec / veh):	-
Analysis Method:	ICU 1	Level Of Service:	B
Analysis Period:	15 minutes	Volume to Capacity (v/c):	0.681

Intersection Setup

Name	Lark Ellen Avenue			Vernon Avenue			Gladstone Street			Gladstone Street		
Approach	Northbound			Southbound			Eastbound			Westbound		
Lane Configuration												
Turning Movement	Left	Thru	Right	Left	Thru	Right	Left	Thru	Right	Left	Thru	Right
Lane Width [ft]	12.00	12.00	12.00	12.00	12.00	12.00	12.00	12.00	12.00	12.00	12.00	12.00
No. of Lanes in Pocket	1	0	0	1	0	0	1	0	0	1	0	0
Pocket Length [ft]	60.00	100.00	100.00	60.00	100.00	100.00	70.00	100.00	100.00	60.00	100.00	100.00
Speed [mph]	35.00			35.00			45.00			45.00		
Grade [%]	0.00			0.00			0.00			0.00		
Crosswalk	Yes			Yes			Yes			Yes		

Volumes

Name	Lark Ellen Avenue			Vernon Avenue			Gladstone Street			Gladstone Street		
Base Volume Input [veh/h]	76	423	178	23	426	88	51	198	32	150	825	39
Base Volume Adjustment Factor	1.0000	1.0000	1.0000	1.0000	1.0000	1.0000	1.0000	1.0000	1.0000	1.0000	1.0000	1.0000
Heavy Vehicles Percentage [%]	2.00	2.00	2.00	2.00	2.00	2.00	2.00	2.00	2.00	2.00	2.00	2.00
Growth Rate	1.00	1.00	1.00	1.00	1.00	1.00	1.00	1.00	1.00	1.00	1.00	1.00
In-Process Volume [veh/h]	0	0	0	0	0	0	0	0	0	0	0	0
Site-Generated Trips [veh/h]	0	0	0	0	0	0	0	0	0	0	0	0
Diverted Trips [veh/h]	0	0	0	0	0	0	0	0	0	0	0	0
Pass-by Trips [veh/h]	0	0	0	0	0	0	0	0	0	0	0	0
Existing Site Adjustment Volume [veh/h]	0	0	0	0	0	0	0	0	0	0	0	0
Other Volume [veh/h]	0	0	0	0	0	0	0	0	0	0	0	0
Total Hourly Volume [veh/h]	76	423	178	23	426	88	51	198	32	150	825	39
Peak Hour Factor	1.0000	1.0000	1.0000	1.0000	1.0000	1.0000	1.0000	1.0000	1.0000	1.0000	1.0000	1.0000
Other Adjustment Factor	1.0000	1.0000	1.0000	1.0000	1.0000	1.0000	1.0000	1.0000	1.0000	1.0000	1.0000	1.0000
Total 15-Minute Volume [veh/h]	19	106	45	6	107	22	13	50	8	38	206	10
Total Analysis Volume [veh/h]	76	423	178	23	426	88	51	198	32	150	825	39
Pedestrian Volume [ped/h]	0			0			0			0		
Bicycle Volume [bicycles/h]	0			0			0			0		

Intersection Settings

Cycle Length [s]	100
Lost time [s]	10.00

Phasing & Timing

Control Type	Permiss	Permiss	Permiss	Permiss	Permiss	Permiss	Permiss	Permiss	Permiss	Permiss	Permiss	Permiss
Signal group	0	2	0	0	6	0	0	8	0	0	4	0
Auxiliary Signal Groups												
Lead / Lag	-	-	-	-	-	-	-	-	-	-	-	-

Movement, Approach, & Intersection Results

V/C, Movement V/C Ratio	0.05	0.26	0.11	0.01	0.16	0.16	0.03	0.07	0.07	0.09	0.27	0.27
Intersection LOS	B											
Intersection V/C	0.681											

Intersection Level Of Service Report
Intersection 30: Azusa Avenue (NS) at I-210 EB Ramps (EW)

Control Type:	Signalized	Delay (sec / veh):	-
Analysis Method:	ICU 1	Level Of Service:	B
Analysis Period:	15 minutes	Volume to Capacity (v/c):	0.659

Intersection Setup

Name	Azusa Avenue		Azusa Avenue		I-210 EB Ramps	
Approach	Northbound		Southbound		Eastbound	
Lane Configuration						
Turning Movement	Left	Thru	Thru	Right	Left	Right
Lane Width [ft]	12.00	12.00	12.00	12.00	12.00	12.00
No. of Lanes in Pocket	0	0	0	0	0	0
Pocket Length [ft]	100.00	100.00	100.00	100.00	100.00	100.00
Speed [mph]	35.00		35.00		35.00	
Grade [%]	0.00		0.00		0.00	
Crosswalk	No		No		Yes	

Volumes

Name	Azusa Avenue		Azusa Avenue		I-210 EB Ramps	
Base Volume Input [veh/h]	0	1128	627	0	193	331
Base Volume Adjustment Factor	1.0000	1.0000	1.0000	1.0000	1.0000	1.0000
Heavy Vehicles Percentage [%]	2.00	2.00	2.00	2.00	2.00	2.00
Growth Rate	1.00	1.00	1.00	1.00	1.00	1.00
In-Process Volume [veh/h]	0	0	0	0	0	0
Site-Generated Trips [veh/h]	0	0	0	0	0	0
Diverted Trips [veh/h]	0	0	0	0	0	0
Pass-by Trips [veh/h]	0	0	0	0	0	0
Existing Site Adjustment Volume [veh/h]	0	0	0	0	0	0
Other Volume [veh/h]	0	0	0	0	0	0
Total Hourly Volume [veh/h]	0	1128	627	0	193	331
Peak Hour Factor	1.0000	1.0000	1.0000	1.0000	1.0000	1.0000
Other Adjustment Factor	1.0000	1.0000	1.0000	1.0000	1.0000	1.0000
Total 15-Minute Volume [veh/h]	0	282	157	0	48	83
Total Analysis Volume [veh/h]	0	1128	627	0	193	331
Pedestrian Volume [ped/h]	0		0		0	
Bicycle Volume [bicycles/h]	0		0		0	

Intersection Settings

Cycle Length [s]	100
Lost time [s]	10.00

Phasing & Timing

Control Type	Permissive	Permissive	Permissive	Permissive	Split	Split
Signal group	0	2	6	0	3	0
Auxiliary Signal Groups						
Lead / Lag	-	-	-	-	Lead	-

Movement, Approach, & Intersection Results

V/C, Movement V/C Ratio	0.00	0.35	0.20	0.00	0.06	0.21
Intersection LOS	B					
Intersection V/C	0.659					

Intersection Level Of Service Report
Intersection 31: Azusa Avenue (NS) at Paramount Street (EW)

Control Type:	Signalized	Delay (sec / veh):	-
Analysis Method:	ICU 1	Level Of Service:	A
Analysis Period:	15 minutes	Volume to Capacity (v/c):	0.587

Intersection Setup

Name	Azusa Avenue			Azusa Avenue			Paramount Street			Paramount Street		
Approach	Northbound			Southbound			Eastbound			Westbound		
Lane Configuration												
Turning Movement	Left	Thru	Right	Left	Thru	Right	Left	Thru	Right	Left	Thru	Right
Lane Width [ft]	12.00	12.00	12.00	12.00	12.00	12.00	12.00	12.00	12.00	12.00	12.00	12.00
No. of Lanes in Pocket	1	0	0	1	0	0	0	0	0	0	0	0
Pocket Length [ft]	200.00	100.00	100.00	110.00	100.00	100.00	100.00	100.00	100.00	100.00	100.00	100.00
Speed [mph]	35.00			35.00			25.00			15.00		
Grade [%]	0.00			0.00			0.00			0.00		
Crosswalk	No			Yes			Yes			Yes		

Volumes

Name	Azusa Avenue			Azusa Avenue			Paramount Street			Paramount Street		
Base Volume Input [veh/h]	127	936	0	11	819	75	162	0	79	2	0	8
Base Volume Adjustment Factor	1.0000	1.0000	1.0000	1.0000	1.0000	1.0000	1.0000	1.0000	1.0000	1.0000	1.0000	1.0000
Heavy Vehicles Percentage [%]	2.00	2.00	2.00	2.00	2.00	2.00	2.00	2.00	2.00	2.00	2.00	2.00
Growth Rate	1.00	1.00	1.00	1.00	1.00	1.00	1.00	1.00	1.00	1.00	1.00	1.00
In-Process Volume [veh/h]	0	0	0	0	0	0	0	0	0	0	0	0
Site-Generated Trips [veh/h]	0	0	0	0	0	0	0	0	0	0	0	0
Diverted Trips [veh/h]	0	0	0	0	0	0	0	0	0	0	0	0
Pass-by Trips [veh/h]	0	0	0	0	0	0	0	0	0	0	0	0
Existing Site Adjustment Volume [veh/h]	0	0	0	0	0	0	0	0	0	0	0	0
Other Volume [veh/h]	0	0	0	0	0	0	0	0	0	0	0	0
Total Hourly Volume [veh/h]	127	936	0	11	819	75	162	0	79	2	0	8
Peak Hour Factor	1.0000	1.0000	1.0000	1.0000	1.0000	1.0000	1.0000	1.0000	1.0000	1.0000	1.0000	1.0000
Other Adjustment Factor	1.0000	1.0000	1.0000	1.0000	1.0000	1.0000	1.0000	1.0000	1.0000	1.0000	1.0000	1.0000
Total 15-Minute Volume [veh/h]	32	234	0	3	205	19	41	0	20	1	0	2
Total Analysis Volume [veh/h]	127	936	0	11	819	75	162	0	79	2	0	8
Pedestrian Volume [ped/h]	0			0			0			0		
Bicycle Volume [bicycles/h]	0			0			0			0		

Intersection Settings

Cycle Length [s]	100
Lost time [s]	10.00

Phasing & Timing

Control Type	Permiss	Permiss	Permiss	Permiss	Permiss	Permiss	Permiss	Permiss	Permiss	Permiss	Permiss	Permiss
Signal group	0	2	0	0	6	0	0	8	0	0	4	0
Auxiliary Signal Groups												
Lead / Lag	-	-	-	-	-	-	-	-	-	-	-	-

Movement, Approach, & Intersection Results

V/C, Movement V/C Ratio	0.08	0.29	0.00	0.01	0.26	0.05	0.10	0.00	0.15	0.00	0.00	0.01
Intersection LOS	A											
Intersection V/C	0.587											

Intersection Level Of Service Report
Intersection 32: Azusa Avenue (NS) at Gladstone Street (EW)

Control Type:	Signalized	Delay (sec / veh):	-
Analysis Method:	ICU 1	Level Of Service:	C
Analysis Period:	15 minutes	Volume to Capacity (v/c):	0.726

Intersection Setup

Name	Azusa Avenue			Azusa Avenue			Gladstone Street			Gladstone Street		
Approach	Northbound			Southbound			Eastbound			Westbound		
Lane Configuration												
Turning Movement	Left	Thru	Right	Left	Thru	Right	Left	Thru	Right	Left	Thru	Right
Lane Width [ft]	12.00	12.00	12.00	12.00	12.00	12.00	12.00	12.00	12.00	12.00	12.00	12.00
No. of Lanes in Pocket	1	0	1	2	0	0	1	0	0	1	0	0
Pocket Length [ft]	190.00	100.00	190.00	190.00	100.00	100.00	150.00	100.00	100.00	150.00	100.00	100.00
Speed [mph]	35.00			35.00			40.00			40.00		
Grade [%]	0.00			0.00			0.00			0.00		
Crosswalk	Yes			Yes			Yes			Yes		

Volumes

Name	Azusa Avenue			Azusa Avenue			Gladstone Street			Gladstone Street		
Base Volume Input [veh/h]	113	668	64	119	631	82	117	243	41	139	738	93
Base Volume Adjustment Factor	1.0000	1.0000	1.0000	1.0000	1.0000	1.0000	1.0000	1.0000	1.0000	1.0000	1.0000	1.0000
Heavy Vehicles Percentage [%]	2.00	2.00	2.00	2.00	2.00	2.00	2.00	2.00	2.00	2.00	2.00	2.00
Growth Rate	1.00	1.00	1.00	1.00	1.00	1.00	1.00	1.00	1.00	1.00	1.00	1.00
In-Process Volume [veh/h]	0	0	0	0	0	0	0	0	0	0	0	0
Site-Generated Trips [veh/h]	0	0	0	0	0	0	0	0	0	0	0	0
Diverted Trips [veh/h]	0	0	0	0	0	0	0	0	0	0	0	0
Pass-by Trips [veh/h]	0	0	0	0	0	0	0	0	0	0	0	0
Existing Site Adjustment Volume [veh/h]	0	0	0	0	0	0	0	0	0	0	0	0
Other Volume [veh/h]	0	0	0	0	0	0	0	0	0	0	0	0
Total Hourly Volume [veh/h]	113	668	64	119	631	82	117	243	41	139	738	93
Peak Hour Factor	1.0000	1.0000	1.0000	1.0000	1.0000	1.0000	1.0000	1.0000	1.0000	1.0000	1.0000	1.0000
Other Adjustment Factor	1.0000	1.0000	1.0000	1.0000	1.0000	1.0000	1.0000	1.0000	1.0000	1.0000	1.0000	1.0000
Total 15-Minute Volume [veh/h]	28	167	16	30	158	21	29	61	10	35	185	23
Total Analysis Volume [veh/h]	113	668	64	119	631	82	117	243	41	139	738	93
Pedestrian Volume [ped/h]	0			0			0			0		
Bicycle Volume [bicycles/h]	0			0			0			0		

Intersection Settings

Cycle Length [s]	100
Lost time [s]	10.00

Phasing & Timing

Control Type	Protecte	Permiss	Overlap	Protecte	Permiss	Permiss	Protecte	Permiss	Permiss	Protecte	Permiss	Permiss
Signal group	5	2	2	1	6	0	3	8	0	7	4	0
Auxiliary Signal Groups			2,7									
Lead / Lag	Lead	-	-	Lead	-	-	Lead	-	-	Lead	-	-

Movement, Approach, & Intersection Results

V/C, Movement V/C Ratio	0.07	0.21	0.00	0.04	0.22	0.22	0.07	0.09	0.09	0.09	0.26	0.26
Intersection LOS	C											
Intersection V/C	0.726											

Intersection Level Of Service Report
Intersection 33: San Gabriel Ave/Azusa Ave (NS) at 1st St (EW)

Control Type:	Signalized	Delay (sec / veh):	-
Analysis Method:	ICU 1	Level Of Service:	B
Analysis Period:	15 minutes	Volume to Capacity (v/c):	0.663

Intersection Setup

Name												
Approach	Northbound			Southbound			Eastbound			Westbound		
Lane Configuration												
Turning Movement	Left	Thru	Right	Left	Thru	Right	Left	Thru	Right	Left	Thru	Right
Lane Width [ft]	12.00	12.00	12.00	12.00	12.00	12.00	12.00	12.00	12.00	12.00	12.00	12.00
No. of Lanes in Pocket	0	0	0	0	0	0	0	0	0	0	0	0
Pocket Length [ft]	100.00	100.00	100.00	100.00	100.00	100.00	100.00	100.00	100.00	100.00	100.00	100.00
Speed [mph]	35.00			35.00			35.00			35.00		
Grade [%]	0.00			0.00			0.00			0.00		
Crosswalk	No			Yes			Yes			Yes		

Volumes

Name												
Base Volume Input [veh/h]	86	516	410	72	826	31	38	82	76	369	252	161
Base Volume Adjustment Factor	1.0000	1.0000	1.0000	1.0000	1.0000	1.0000	1.0000	1.0000	1.0000	1.0000	1.0000	1.0000
Heavy Vehicles Percentage [%]	2.00	2.00	2.00	2.00	2.00	2.00	2.00	2.00	2.00	2.00	2.00	2.00
Growth Rate	1.04	1.04	1.04	1.04	1.04	1.04	1.04	1.04	1.04	1.04	1.04	1.04
In-Process Volume [veh/h]	0	0	0	0	0	0	0	0	0	0	0	0
Site-Generated Trips [veh/h]	0	0	0	0	0	0	0	0	0	0	0	0
Diverted Trips [veh/h]	0	0	0	0	0	0	0	0	0	0	0	0
Pass-by Trips [veh/h]	0	0	0	0	0	0	0	0	0	0	0	0
Existing Site Adjustment Volume [veh/h]	0	0	0	0	0	0	0	0	0	0	0	0
Other Volume [veh/h]	0	0	0	0	0	0	0	0	0	0	0	0
Total Hourly Volume [veh/h]	89	537	426	75	859	32	40	85	79	384	262	167
Peak Hour Factor	0.9080	0.9080	0.9080	0.9080	0.9080	0.9080	0.9080	0.9080	0.9080	0.9080	0.9080	0.9080
Other Adjustment Factor	1.0000	1.0000	1.0000	1.0000	1.0000	1.0000	1.0000	1.0000	1.0000	1.0000	1.0000	1.0000
Total 15-Minute Volume [veh/h]	25	148	117	21	237	9	11	23	22	106	72	46
Total Analysis Volume [veh/h]	98	591	469	83	946	35	44	94	87	423	289	184
Pedestrian Volume [ped/h]	0			0			0			0		
Bicycle Volume [bicycles/h]	0			0			0			0		

Intersection Settings

Cycle Length [s]	100
Lost time [s]	10.00

Phasing & Timing

Control Type	Protecte	Permiss	Permiss	Protecte	Permiss	Permiss	Protecte	Permiss	Permiss	Protecte	Permiss	Permiss
Signal group	5	2	0	1	6	0	3	8	0	7	4	0
Auxiliary Signal Groups												
Lead / Lag	Lead	-	-	Lead	-	-	Lead	-	-	Lead	-	-

Movement, Approach, & Intersection Results

V/C, Movement V/C Ratio	0.06	0.18	0.29	0.05	0.30	0.02	0.03	0.06	0.05	0.13	0.15	0.15
Intersection LOS	B											
Intersection V/C	0.663											

Intersection Level Of Service Report
Intersection 34: Alameda Ave/I-210 WB Ramps NS) at 1st St (EW)

Control Type:	Signalized	Delay (sec / veh):	-
Analysis Method:	ICU 1	Level Of Service:	D
Analysis Period:	15 minutes	Volume to Capacity (v/c):	0.896

Intersection Setup

Name												
Approach	Northbound			Southbound			Eastbound			Westbound		
Lane Configuration												
Turning Movement	Left	Thru	Right	Left	Thru	Right	Left	Thru	Right	Left	Thru	Right
Lane Width [ft]	12.00	12.00	12.00	12.00	12.00	12.00	12.00	12.00	12.00	12.00	12.00	12.00
No. of Lanes in Pocket	1	0	0	1	0	1	1	0	1	1	0	1
Pocket Length [ft]	325.00	100.00	100.00	50.00	100.00	250.00	50.00	100.00	100.00	100.00	100.00	110.00
Speed [mph]	35.00			35.00			35.00			35.00		
Grade [%]	0.00			0.00			0.00			0.00		
Crosswalk	Yes			Yes			Yes			Yes		

Volumes

Name												
Base Volume Input [veh/h]	111	14	7	41	112	64	8	239	388	580	465	44
Base Volume Adjustment Factor	1.0000	1.0000	1.0000	1.0000	1.0000	1.0000	1.0000	1.0000	1.0000	1.0000	1.0000	1.0000
Heavy Vehicles Percentage [%]	2.00	2.00	2.00	2.00	2.00	2.00	2.00	2.00	2.00	2.00	2.00	2.00
Growth Rate	1.00	1.00	1.00	1.00	1.00	1.00	1.00	1.00	1.00	1.00	1.00	1.00
In-Process Volume [veh/h]	0	0	0	0	0	0	0	0	0	0	0	0
Site-Generated Trips [veh/h]	0	0	0	0	0	0	0	0	0	0	0	0
Diverted Trips [veh/h]	0	0	0	0	0	0	0	0	0	0	0	0
Pass-by Trips [veh/h]	0	0	0	0	0	0	0	0	0	0	0	0
Existing Site Adjustment Volume [veh/h]	0	0	0	0	0	0	0	0	0	0	0	0
Other Volume [veh/h]	0	0	0	0	0	0	0	0	0	0	0	0
Total Hourly Volume [veh/h]	111	14	7	41	112	64	8	239	388	580	465	44
Peak Hour Factor	0.9350	0.9350	0.9350	0.9350	0.9350	0.9350	0.9350	0.9350	0.9350	0.9350	0.9350	0.9350
Other Adjustment Factor	1.0000	1.0000	1.0000	1.0000	1.0000	1.0000	1.0000	1.0000	1.0000	1.0000	1.0000	1.0000
Total 15-Minute Volume [veh/h]	30	4	2	11	30	17	2	64	104	155	124	12
Total Analysis Volume [veh/h]	119	15	7	44	120	68	9	256	415	620	497	47
Pedestrian Volume [ped/h]	0			0			0			0		
Bicycle Volume [bicycles/h]	0			0			0			0		

Intersection Settings

Cycle Length [s]	100
Lost time [s]	10.00

Phasing & Timing

Control Type	Permiss	Permiss	Permiss	Permiss	Permiss	Permiss	Permiss	Permiss	Permiss	Permiss	Permiss	Permiss
Signal group	0	2	0	0	6	0	0	8	0	0	4	0
Auxiliary Signal Groups												
Lead / Lag	-	-	-	-	-	-	-	-	-	-	-	-

Movement, Approach, & Intersection Results

V/C, Movement V/C Ratio	0.07	0.01	0.01	0.03	0.08	0.04	0.01	0.08	0.26	0.39	0.31	0.03
Intersection LOS	D											
Intersection V/C	0.896											

Vincent Avenue Industrial Building

Vistro File: G:\...\PM.vistro
Report File: G:\...\E PM.pdf

Scenario 1 Existing
5/4/2020

Intersection Analysis Summary

ID	Intersection Name	Control Type	Method	Worst Mvmt	V/C	Delay (s/veh)	LOS
1	I-605 SB On Ramp (NS) at Live Oak Avenue (EW)	Signalized	ICU 1	WB Left	0.776	-	C
2	I-605 NB Ramps (NS) at Live Oak Avenue (EW)	Two-way stop	HCM 6th Edition	NB Right	1.214	138.6	F
3	Graham Road (NS) at Live Oak Avenue (EW)	Signalized	ICU 1	WB Thru	0.565	-	A
4	Rivergrade Road (NS) at Live Oak Avenue (EW)	Signalized	ICU 1	EB Thru	0.877	-	D
5	Stewart Avenue (NS) at Live Oak Avenue (EW)	Signalized	ICU 1	EB Thru	0.758	-	C
6	Baldwin Park Boulevard (NS) at Live Oak Avenue (EW)	Signalized	ICU 1	EB Thru	0.734	-	C
7	Arrow Highway (NS) at Live Oak Ave/Arrow Hwy (EW)	Signalized	ICU 1	EB Thru	0.888	-	D
8	Maine Avenue (NS) at Arrow Highway (EW)	Signalized	ICU 1	EB Thru	0.807	-	D
9	Santa Fe Dam/Azusa Canyon Road (NS) at Arrow Highway (EW)	Signalized	ICU 1	EB Thru	0.897	-	D
10	4th Street (NS) at Arrow Highway (EW)	Signalized	ICU 1	EB Thru	0.551	-	A
11	Irwindale Avenue (NS) at I-210 WB Ramps (EW)	Signalized	ICU 1	SB Thru	0.536	-	A
12	Irwindale Avenue (NS) at I-210 EB Ramps (EW)	Signalized	ICU 1	NB Thru	0.741	-	C
13	Irwindale Avenue (NS) at Jardin De Roca/Irwindale Rd (EW)	Signalized	ICU 1	SB Thru	0.692	-	B
14	Irwindale Avenue (NS) at 1st Street (EW)	Signalized	ICU 1	SB Thru	0.444	-	A
15	Irwindale Avenue (NS) at Gladstone Street (EW)	Signalized	ICU 1	SB Thru	0.646	-	B
16	Irwindale Avenue (NS) at Arrow Highway (EW)	Signalized	ICU 1	EB Right	0.754	-	C
17	Vincent Avenue (NS) at	Signalized	ICU 1	EB Right	0.836		D

17	Gladstone Street (EW)	Signalized	ICU 1	EB Right	0.850	-	D
18	Vincent Avenue (NS) at Arrow Highway (EW)	Signalized	ICU 1	EB Thru	0.776	-	C
21	Vincent Avenue (NS) at Cypress Street (EW)	Signalized	ICU 1	EB Thru	0.720	-	C
22	Vincent Avenue (NS) at San Bernardino Road (EW)	Signalized	ICU 1	EB Thru	0.652	-	B
23	Vincent Avenue (NS) at Badillo Street (EW)	Signalized	ICU 1	EB Thru	0.757	-	C
24	Vincent Avenue (NS) at Puente Avenue (EW)	Signalized	ICU 1	SB Thru	0.628	-	B
25	Vincent Avenue (NS) at Rowland Avenue (EW)	Signalized	ICU 1	SB Thru	0.604	-	B
26	Vincent Avenue (NS) at Workman Avenue (EW)	Signalized	ICU 1	NB Thru	0.685	-	B
27	Vincent Avenue (NS) at I-10 WB Ramps (EW)	Signalized	ICU 1	SB Thru	0.447	-	A
28	Vincent Avenue (NS) at I-10 EB Ramps (EW)	Signalized	ICU 1	NB Thru	0.536	-	A
29	Vernon Ave/Lark Ellen Ave (NS) at Gladstone Street (EW)	Signalized	ICU 1	EB Right	0.726	-	C
30	Azusa Avenue (NS) at I-210 EB Ramps (EW)	Signalized	ICU 1	NB Thru	0.654	-	B
31	Azusa Avenue (NS) at Paramount Street (EW)	Signalized	ICU 1	SB Thru	0.631	-	B
32	Azusa Avenue (NS) at Gladstone Street (EW)	Signalized	ICU 1	EB Thru	0.730	-	C
33	San Gabriel Ave/Azusa Ave (NS) at 1st St (EW)	Signalized	ICU 1	SB Thru	0.658	-	B
34	Alameda Ave/I-210 WB Ramps (NS) at 1st St (EW)	Signalized	ICU 1	NB Left	0.687	-	B

V/C, Delay, LOS: For two-way stop, these values are taken from the movement with the worst (highest) delay value. For all other control types, they are taken for the whole intersection.

Intersection Level Of Service Report
Intersection 1: I-605 SB On Ramp (NS) at Live Oak Avenue (EW)

Control Type:	Signalized	Delay (sec / veh):	-
Analysis Method:	ICU 1	Level Of Service:	C
Analysis Period:	15 minutes	Volume to Capacity (v/c):	0.776

Intersection Setup

Name	I-605 SB On Ramps				Live Oak Avenue	
Approach	Northbound		Eastbound		Westbound	
Lane Configuration						
Turning Movement	Left	Right	Thru	Right	Left	Thru
Lane Width [ft]	12.00	12.00	12.00	12.00	12.00	12.00
No. of Lanes in Pocket	0	0	0	0	1	0
Pocket Length [ft]	100.00	100.00	100.00	100.00	365.00	100.00
Speed [mph]	35.00		35.00		45.00	
Grade [%]	0.00		0.00		0.00	
Crosswalk	Yes		No		No	

Volumes

Name	I-605 SB On Ramps				Live Oak Avenue	
Base Volume Input [veh/h]	0	0	1049	1114	557	884
Base Volume Adjustment Factor	1.0000	1.0000	1.0000	0.0000	1.0000	1.0000
Heavy Vehicles Percentage [%]	2.00	2.00	2.00	2.00	2.00	2.00
Growth Rate	1.00	1.00	1.00	1.00	1.00	1.00
In-Process Volume [veh/h]	0	0	0	0	0	0
Site-Generated Trips [veh/h]	0	0	0	0	0	0
Diverted Trips [veh/h]	0	0	0	0	0	0
Pass-by Trips [veh/h]	0	0	0	0	0	0
Existing Site Adjustment Volume [veh/h]	0	0	0	0	0	0
Other Volume [veh/h]	0	0	0	0	0	0
Total Hourly Volume [veh/h]	0	0	1049	0	557	884
Peak Hour Factor	1.0000	1.0000	1.0000	1.0000	1.0000	1.0000
Other Adjustment Factor	1.0000	1.0000	1.0000	0.0000	1.0000	1.0000
Total 15-Minute Volume [veh/h]	0	0	262	0	139	221
Total Analysis Volume [veh/h]	0	0	1049	0	557	884
Pedestrian Volume [ped/h]	0		0		0	
Bicycle Volume [bicycles/h]	0		0		0	

Intersection Settings

Cycle Length [s]	100
Lost time [s]	10.00

Phasing & Timing

Control Type	Permissive	Permissive	Permissive	Permissive	Protected	Permissive
Signal group	0	0	2	0	1	6
Auxiliary Signal Groups						
Lead / Lag	-	-	-	-	Lead	-

Movement, Approach, & Intersection Results

V/C, Movement V/C Ratio	0.00	0.00	0.33	0.00	0.35	0.28
Intersection LOS	C					
Intersection V/C	0.776					

Intersection Level Of Service Report
Intersection 2: I-605 NB Ramps (NS) at Live Oak Avenue (EW)

Control Type:	Two-way stop	Delay (sec / veh):	138.6
Analysis Method:	HCM 6th Edition	Level Of Service:	F
Analysis Period:	15 minutes	Volume to Capacity (v/c):	1.214

Intersection Setup

Name	I-605 NB Ramps			I-605 NB Ramps			Live Oak Avenue			Live Oak Avenue		
Approach	Northbound			Southbound			Eastbound			Westbound		
Lane Configuration												
Turning Movement	Left	Thru	Right	Left	Thru	Right	Left	Thru	Right	Left	Thru	Right
Lane Width [ft]	12.00	12.00	12.00	12.00	12.00	12.00	12.00	12.00	12.00	12.00	12.00	12.00
No. of Lanes in Pocket	0	0	0	0	0	0	0	0	0	0	0	0
Pocket Length [ft]	100.00	100.00	100.00	100.00	100.00	100.00	100.00	100.00	100.00	100.00	100.00	100.00
Speed [mph]	35.00			35.00			45.00			45.00		
Grade [%]	0.00			0.00			0.00			0.00		
Crosswalk	Yes			Yes			No			No		

Volumes

Name	I-605 NB Ramps			I-605 NB Ramps			Live Oak Avenue			Live Oak Avenue		
Base Volume Input [veh/h]	0	0	621	0	0	523	0	1012	0	0	944	0
Base Volume Adjustment Factor	1.0000	1.0000	1.0000	1.0000	1.0000	1.0000	1.0000	1.0000	1.0000	1.0000	1.0000	1.0000
Heavy Vehicles Percentage [%]	2.00	2.00	2.00	2.00	2.00	2.00	2.00	2.00	2.00	2.00	2.00	2.00
Growth Rate	1.00	1.00	1.00	1.00	1.00	1.00	1.00	1.00	1.00	1.00	1.00	1.00
In-Process Volume [veh/h]	0	0	0	0	0	0	0	0	0	0	0	0
Site-Generated Trips [veh/h]	0	0	0	0	0	0	0	0	0	0	0	0
Diverted Trips [veh/h]	0	0	0	0	0	0	0	0	0	0	0	0
Pass-by Trips [veh/h]	0	0	0	0	0	0	0	0	0	0	0	0
Existing Site Adjustment Volume [veh/h]	0	0	0	0	0	0	0	0	0	0	0	0
Other Volume [veh/h]	0	0	0	0	0	0	0	0	0	0	0	0
Total Hourly Volume [veh/h]	0	0	621	0	0	523	0	1012	0	0	944	0
Peak Hour Factor	1.0000	1.0000	1.0000	1.0000	1.0000	1.0000	1.0000	1.0000	1.0000	1.0000	1.0000	1.0000
Other Adjustment Factor	1.0000	1.0000	1.0000	1.0000	1.0000	1.0000	1.0000	1.0000	1.0000	1.0000	1.0000	1.0000
Total 15-Minute Volume [veh/h]	0	0	155	0	0	131	0	253	0	0	236	0
Total Analysis Volume [veh/h]	0	0	621	0	0	523	0	1012	0	0	944	0
Pedestrian Volume [ped/h]	0			0			0			0		

Intersection Settings

Priority Scheme	Stop	Stop	Free	Free
Flared Lane				
Storage Area [veh]	0	0	0	0
Two-Stage Gap Acceptance	No	No		
Number of Storage Spaces in Median	0	0	0	0

Movement, Approach, & Intersection Results

V/C, Movement V/C Ratio	0.00	0.00	1.21	0.00	0.00	0.97	0.00	0.01	0.00	0.00	0.01	0.00
d_M, Delay for Movement [s/veh]	0.00	0.00	138.63	0.00	0.00	59.70	0.00	0.00	0.00	0.00	0.00	0.00
Movement LOS			F			F		A			A	
95th-Percentile Queue Length [veh/ln]	0.00	0.00	23.56	0.00	0.00	13.08	0.00	0.00	0.00	0.00	0.00	0.00
95th-Percentile Queue Length [ft/ln]	0.00	0.00	589.00	0.00	0.00	326.90	0.00	0.00	0.00	0.00	0.00	0.00
d_A, Approach Delay [s/veh]	138.63			59.70			0.00			0.00		
Approach LOS	F			F			A			A		
d_I, Intersection Delay [s/veh]	37.84											
Intersection LOS	F											

Intersection Level Of Service Report
Intersection 3: Graham Road (NS) at Live Oak Avenue (EW)

Control Type:	Signalized	Delay (sec / veh):	-
Analysis Method:	ICU 1	Level Of Service:	A
Analysis Period:	15 minutes	Volume to Capacity (v/c):	0.565

Intersection Setup

Name	Graham Road		Live Oak Avenue		Live Oak Avenue	
Approach	Northbound		Eastbound		Westbound	
Lane Configuration						
Turning Movement	Left	Right	Thru	Right	Left	Thru
Lane Width [ft]	12.00	12.00	12.00	12.00	12.00	12.00
No. of Lanes in Pocket	0	0	0	0	1	0
Pocket Length [ft]	100.00	100.00	100.00	100.00	205.00	100.00
Speed [mph]	35.00		45.00		45.00	
Grade [%]	0.00		0.00		0.00	
Crosswalk	Yes		No		Yes	

Volumes

Name	Graham Road		Live Oak Avenue		Live Oak Avenue	
Base Volume Input [veh/h]	38	39	578	28	14	1334
Base Volume Adjustment Factor	1.0000	1.0000	1.0000	1.0000	1.0000	1.0000
Heavy Vehicles Percentage [%]	2.00	2.00	2.00	2.00	2.00	2.00
Growth Rate	1.00	1.00	1.00	1.00	1.00	1.00
In-Process Volume [veh/h]	0	0	0	0	0	0
Site-Generated Trips [veh/h]	0	0	0	0	0	0
Diverted Trips [veh/h]	0	0	0	0	0	0
Pass-by Trips [veh/h]	0	0	0	0	0	0
Existing Site Adjustment Volume [veh/h]	0	0	0	0	0	0
Other Volume [veh/h]	0	0	0	0	0	0
Total Hourly Volume [veh/h]	38	39	578	28	14	1334
Peak Hour Factor	1.0000	1.0000	1.0000	1.0000	1.0000	1.0000
Other Adjustment Factor	1.0000	1.0000	1.0000	1.0000	1.0000	1.0000
Total 15-Minute Volume [veh/h]	10	10	145	7	4	334
Total Analysis Volume [veh/h]	38	39	578	28	14	1334
Pedestrian Volume [ped/h]	0		0		0	
Bicycle Volume [bicycles/h]	0		0		0	

Intersection Settings

Cycle Length [s]	100
Lost time [s]	10.00

Phasing & Timing

Control Type	Permissive	Permissive	Permissive	Permissive	Protected	Permissive
Signal group	5	0	8	0	7	4
Auxiliary Signal Groups						
Lead / Lag	Lead	-	-	-	Lead	-

Movement, Approach, & Intersection Results

V/C, Movement V/C Ratio	0.02	0.05	0.18	0.02	0.01	0.42
Intersection LOS	A					
Intersection V/C	0.565					

Intersection Level Of Service Report
Intersection 4: Rivergrade Road (NS) at Live Oak Avenue (EW)

Control Type:	Signalized	Delay (sec / veh):	-
Analysis Method:	ICU 1	Level Of Service:	D
Analysis Period:	15 minutes	Volume to Capacity (v/c):	0.877

Intersection Setup

Name	Rivergrade Raod			Rivergrade Road			Live Oak Avenue			Live Oak Avenue		
Approach	Northbound			Southbound			Eastbound			Westbound		
Lane Configuration												
Turning Movement	Left	Thru	Right	Left	Thru	Right	Left	Thru	Right	Left	Thru	Right
Lane Width [ft]	12.00	12.00	12.00	12.00	12.00	12.00	12.00	12.00	12.00	12.00	12.00	12.00
No. of Lanes in Pocket	1	0	0	1	0	1	1	0	0	1	0	1
Pocket Length [ft]	315.00	100.00	100.00	160.00	100.00	145.00	205.00	100.00	100.00	155.00	100.00	120.00
Speed [mph]	50.00			40.00			45.00			45.00		
Grade [%]	0.00			0.00			0.00			0.00		
Crosswalk	Yes			Yes			Yes			Yes		

Volumes

Name	Rivergrade Raod			Rivergrade Road			Live Oak Avenue			Live Oak Avenue		
Base Volume Input [veh/h]	162	193	481	25	41	54	37	1475	21	117	685	12
Base Volume Adjustment Factor	1.0000	1.0000	1.0000	1.0000	1.0000	1.0000	1.0000	1.0000	1.0000	1.0000	1.0000	1.0000
Heavy Vehicles Percentage [%]	2.00	2.00	2.00	2.00	2.00	2.00	2.00	2.00	2.00	2.00	2.00	2.00
Growth Rate	1.00	1.00	1.00	1.00	1.00	1.00	1.00	1.00	1.00	1.00	1.00	1.00
In-Process Volume [veh/h]	0	0	0	0	0	0	0	0	0	0	0	0
Site-Generated Trips [veh/h]	0	0	0	0	0	0	0	0	0	0	0	0
Diverted Trips [veh/h]	0	0	0	0	0	0	0	0	0	0	0	0
Pass-by Trips [veh/h]	0	0	0	0	0	0	0	0	0	0	0	0
Existing Site Adjustment Volume [veh/h]	0	0	0	0	0	0	0	0	0	0	0	0
Other Volume [veh/h]	0	0	0	0	0	0	0	0	0	0	0	0
Total Hourly Volume [veh/h]	162	193	481	25	41	54	37	1475	21	117	685	12
Peak Hour Factor	1.0000	1.0000	1.0000	1.0000	1.0000	1.0000	1.0000	1.0000	1.0000	1.0000	1.0000	1.0000
Other Adjustment Factor	1.0000	1.0000	1.0000	1.0000	1.0000	1.0000	1.0000	1.0000	1.0000	1.0000	1.0000	1.0000
Total 15-Minute Volume [veh/h]	41	48	120	6	10	14	9	369	5	29	171	3
Total Analysis Volume [veh/h]	162	193	481	25	41	54	37	1475	21	117	685	12
Pedestrian Volume [ped/h]	0			0			0			0		
Bicycle Volume [bicycles/h]	0			0			0			0		

Intersection Settings

Cycle Length [s]	100
Lost time [s]	10.00

Phasing & Timing

Control Type	Protecte	Permiss	Overlap	Protecte	Permiss	Permiss	Protecte	Permiss	Permiss	Protecte	Permiss	Permiss
Signal group	5	2	2	1	6	0	3	8	0	7	4	0
Auxiliary Signal Groups			2,7									
Lead / Lag	Lead	-	-	Lead	-	-	Lead	-	-	Lead	-	-

Movement, Approach, & Intersection Results

V/C, Movement V/C Ratio	0.10	0.12	0.23	0.02	0.01	0.03	0.02	0.46	0.01	0.07	0.21	0.01
Intersection LOS	D											
Intersection V/C	0.877											

Intersection Level Of Service Report
Intersection 5: Stewart Avenue (NS) at Live Oak Avenue (EW)

Control Type:	Signalized	Delay (sec / veh):	-
Analysis Method:	ICU 1	Level Of Service:	C
Analysis Period:	15 minutes	Volume to Capacity (v/c):	0.758

Intersection Setup

Name	Stewart Avenue			Stewart Avenue			Live Oak Avenue			Live Oak Avenue		
Approach	Northbound			Southbound			Eastbound			Westbound		
Lane Configuration												
Turning Movement	Left	Thru	Right	Left	Thru	Right	Left	Thru	Right	Left	Thru	Right
Lane Width [ft]	12.00	12.00	12.00	12.00	12.00	12.00	12.00	12.00	12.00	12.00	12.00	12.00
No. of Lanes in Pocket	0	0	0	1	0	0	1	0	0	1	0	0
Pocket Length [ft]	100.00	100.00	100.00	100.00	100.00	100.00	165.00	100.00	100.00	100.00	100.00	100.00
Speed [mph]	30.00			30.00			45.00			45.00		
Grade [%]	0.00			0.00			0.00			0.00		
Crosswalk	Yes			Yes			No			Yes		

Volumes

Name	Stewart Avenue			Stewart Avenue			Live Oak Avenue			Live Oak Avenue		
Base Volume Input [veh/h]	53	27	7	32	109	7	38	1720	302	31	692	9
Base Volume Adjustment Factor	1.0000	1.0000	1.0000	1.0000	1.0000	1.0000	1.0000	1.0000	1.0000	1.0000	1.0000	1.0000
Heavy Vehicles Percentage [%]	2.00	2.00	2.00	2.00	2.00	2.00	2.00	2.00	2.00	2.00	2.00	2.00
Growth Rate	1.00	1.00	1.00	1.00	1.00	1.00	1.00	1.00	1.00	1.00	1.00	1.00
In-Process Volume [veh/h]	0	0	0	0	0	0	0	0	0	0	0	0
Site-Generated Trips [veh/h]	0	0	0	0	0	0	0	0	0	0	0	0
Diverted Trips [veh/h]	0	0	0	0	0	0	0	0	0	0	0	0
Pass-by Trips [veh/h]	0	0	0	0	0	0	0	0	0	0	0	0
Existing Site Adjustment Volume [veh/h]	0	0	0	0	0	0	0	0	0	0	0	0
Other Volume [veh/h]	0	0	0	0	0	0	0	0	0	0	0	0
Total Hourly Volume [veh/h]	53	27	7	32	109	7	38	1720	302	31	692	9
Peak Hour Factor	1.0000	1.0000	1.0000	1.0000	1.0000	1.0000	1.0000	1.0000	1.0000	1.0000	1.0000	1.0000
Other Adjustment Factor	1.0000	1.0000	1.0000	1.0000	1.0000	1.0000	1.0000	1.0000	1.0000	1.0000	1.0000	1.0000
Total 15-Minute Volume [veh/h]	13	7	2	8	27	2	10	430	76	8	173	2
Total Analysis Volume [veh/h]	53	27	7	32	109	7	38	1720	302	31	692	9
Pedestrian Volume [ped/h]	0			0			0			0		
Bicycle Volume [bicycles/h]	0			0			0			0		

Intersection Settings

Cycle Length [s]	100
Lost time [s]	10.00

Phasing & Timing

Control Type	Permiss	Permiss	Permiss	Permiss	Permiss	Permiss	Permiss	Permiss	Permiss	Permiss	Permiss	Permiss
Signal group	0	2	0	0	6	0	0	8	0	0	4	0
Auxiliary Signal Groups												
Lead / Lag	-	-	-	-	-	-	-	-	-	-	-	-

Movement, Approach, & Intersection Results

V/C, Movement V/C Ratio	0.03	0.05	0.05	0.02	0.07	0.00	0.02	0.54	0.19	0.02	0.22	0.01
Intersection LOS	C											
Intersection V/C	0.758											

Intersection Level Of Service Report
Intersection 6: Baldwin Park Boulevard (NS) at Live Oak Avenue (EW)

Control Type:	Signalized	Delay (sec / veh):	-
Analysis Method:	ICU 1	Level Of Service:	C
Analysis Period:	15 minutes	Volume to Capacity (v/c):	0.734

Intersection Setup

Name	Baldwin Park Boulevard		Live Oak Avenue		Live Oak Avenue	
Approach	Northbound		Eastbound		Westbound	
Lane Configuration						
Turning Movement	Left	Right	Thru	Right	Left	Thru
Lane Width [ft]	12.00	12.00	12.00	12.00	12.00	12.00
No. of Lanes in Pocket	1	0	0	0	1	0
Pocket Length [ft]	100.00	100.00	100.00	100.00	200.00	100.00
Speed [mph]	40.00		45.00		45.00	
Grade [%]	0.00		0.00		0.00	
Crosswalk	Yes		No		No	

Volumes

Name	Baldwin Park Boulevard		Live Oak Avenue		Live Oak Avenue	
Base Volume Input [veh/h]	77	94	1259	623	280	623
Base Volume Adjustment Factor	1.0000	1.0000	1.0000	1.0000	1.0000	1.0000
Heavy Vehicles Percentage [%]	2.00	2.00	2.00	2.00	2.00	2.00
Growth Rate	1.00	1.00	1.00	1.00	1.00	1.00
In-Process Volume [veh/h]	0	0	0	0	0	0
Site-Generated Trips [veh/h]	0	0	0	0	0	0
Diverted Trips [veh/h]	0	0	0	0	0	0
Pass-by Trips [veh/h]	0	0	0	0	0	0
Existing Site Adjustment Volume [veh/h]	0	0	0	0	0	0
Other Volume [veh/h]	0	0	0	0	0	0
Total Hourly Volume [veh/h]	77	94	1259	623	280	623
Peak Hour Factor	1.0000	1.0000	1.0000	1.0000	1.0000	1.0000
Other Adjustment Factor	1.0000	1.0000	1.0000	1.0000	1.0000	1.0000
Total 15-Minute Volume [veh/h]	19	24	315	156	70	156
Total Analysis Volume [veh/h]	77	94	1259	623	280	623
Pedestrian Volume [ped/h]	0		0		0	
Bicycle Volume [bicycles/h]	0		0		0	

Intersection Settings

Cycle Length [s]	100
Lost time [s]	10.00

Phasing & Timing

Control Type	Permissive	Permissive	Permissive	Permissive	Protected	Permissive
Signal group	5	0	8	0	7	4
Auxiliary Signal Groups						
Lead / Lag	Lead	-	-	-	Lead	-

Movement, Approach, & Intersection Results

V/C, Movement V/C Ratio	0.02	0.07	0.39	0.39	0.18	0.19
Intersection LOS	C					
Intersection V/C	0.734					

Intersection Level Of Service Report
Intersection 7: Arrow Highway (NS) at Live Oak Ave/Arrow Hwy (EW)

Control Type:	Signalized	Delay (sec / veh):	-
Analysis Method:	ICU 1	Level Of Service:	D
Analysis Period:	15 minutes	Volume to Capacity (v/c):	0.888

Intersection Setup

Name			Live Oak Avenue		Arrow Highway	
Approach	Southbound		Eastbound		Westbound	
Lane Configuration						
Turning Movement	Left	Right	Left	Thru	Thru	Right
Lane Width [ft]	12.00	12.00	12.00	12.00	12.00	12.00
No. of Lanes in Pocket	0	0	1	0	0	0
Pocket Length [ft]	100.00	100.00	160.00	100.00	100.00	100.00
Speed [mph]	35.00		45.00		45.00	
Grade [%]	0.00		0.00		0.00	
Crosswalk	No		Yes		No	

Volumes

Name			Live Oak Avenue		Arrow Highway	
Base Volume Input [veh/h]	1077	131	41	1326	1117	451
Base Volume Adjustment Factor	1.0000	1.0000	1.0000	1.0000	1.0000	1.0000
Heavy Vehicles Percentage [%]	2.00	2.00	2.00	2.00	2.00	2.00
Growth Rate	1.00	1.00	1.00	1.00	1.00	1.00
In-Process Volume [veh/h]	0	0	0	0	0	0
Site-Generated Trips [veh/h]	0	0	0	0	0	0
Diverted Trips [veh/h]	0	0	0	0	0	0
Pass-by Trips [veh/h]	0	0	0	0	0	0
Existing Site Adjustment Volume [veh/h]	0	0	0	0	0	0
Other Volume [veh/h]	0	0	0	0	0	0
Total Hourly Volume [veh/h]	1077	131	41	1326	1117	451
Peak Hour Factor	1.0000	1.0000	1.0000	1.0000	1.0000	1.0000
Other Adjustment Factor	1.0000	1.0000	1.0000	1.0000	1.0000	1.0000
Total 15-Minute Volume [veh/h]	269	33	10	332	279	113
Total Analysis Volume [veh/h]	1077	131	41	1326	1117	451
Pedestrian Volume [ped/h]	0		0		0	
Bicycle Volume [bicycles/h]	0		0		0	

Intersection Settings

Cycle Length [s]	100
Lost time [s]	10.00

Phasing & Timing

Control Type	Permissive	Permissive	Permissive	Permissive	Permissive	Unsignalized
Signal group	1	0	0	8	4	0
Auxiliary Signal Groups						
Lead / Lag	Lead	-	-	-	-	-

Movement, Approach, & Intersection Results

V/C, Movement V/C Ratio	0.34	0.08	0.03	0.41	0.35	0.00
Intersection LOS	D					
Intersection V/C	0.888					

Intersection Level Of Service Report
Intersection 8: Maine Avenue (NS) at Arrow Highway (EW)

Control Type:	Signalized	Delay (sec / veh):	-
Analysis Method:	ICU 1	Level Of Service:	D
Analysis Period:	15 minutes	Volume to Capacity (v/c):	0.807

Intersection Setup

Name	Maine Avenue		Arrow Highway		Arrow Highway	
Approach	Northbound		Eastbound		Westbound	
Lane Configuration						
Turning Movement	Left	Right	Thru	Right	Left	Thru
Lane Width [ft]	12.00	12.00	12.00	12.00	12.00	12.00
No. of Lanes in Pocket	0	1	0	0	1	0
Pocket Length [ft]	100.00	50.00	100.00	100.00	80.00	100.00
Speed [mph]	35.00		45.00		45.00	
Grade [%]	0.00		0.00		0.00	
Crosswalk	Yes		No		Yes	

Volumes

Name	Maine Avenue		Arrow Highway		Arrow Highway	
Base Volume Input [veh/h]	247	57	1849	555	70	1046
Base Volume Adjustment Factor	1.0000	1.0000	1.0000	1.0000	1.0000	1.0000
Heavy Vehicles Percentage [%]	2.00	2.00	2.00	2.00	2.00	2.00
Growth Rate	1.00	1.00	1.00	1.00	1.00	1.00
In-Process Volume [veh/h]	0	0	0	0	0	0
Site-Generated Trips [veh/h]	0	0	0	0	0	0
Diverted Trips [veh/h]	0	0	0	0	0	0
Pass-by Trips [veh/h]	0	0	0	0	0	0
Existing Site Adjustment Volume [veh/h]	0	0	0	0	0	0
Other Volume [veh/h]	0	0	0	0	0	0
Total Hourly Volume [veh/h]	247	57	1849	555	70	1046
Peak Hour Factor	1.0000	1.0000	1.0000	1.0000	1.0000	1.0000
Other Adjustment Factor	1.0000	1.0000	1.0000	1.0000	1.0000	1.0000
Total 15-Minute Volume [veh/h]	62	14	462	139	18	262
Total Analysis Volume [veh/h]	247	57	1849	555	70	1046
Pedestrian Volume [ped/h]	0		0		0	
Bicycle Volume [bicycles/h]	0		0		0	

Intersection Settings

Cycle Length [s]	100
Lost time [s]	10.00

Phasing & Timing

Control Type	Split	Split	Permissive	Permissive	Permissive	Permissive
Signal group	5	0	8	0	0	4
Auxiliary Signal Groups						
Lead / Lag	Lead	-	-	-	-	-

Movement, Approach, & Intersection Results

V/C, Movement V/C Ratio	0.08	0.04	0.58	0.35	0.04	0.22
Intersection LOS	D					
Intersection V/C	0.807					

Intersection Level Of Service Report
Intersection 9: Santa Fe Dam/Azusa Canyon Road (NS) at Arrow Highway (EW)

Control Type:	Signalized	Delay (sec / veh):	-
Analysis Method:	ICU 1	Level Of Service:	D
Analysis Period:	15 minutes	Volume to Capacity (v/c):	0.897

Intersection Setup

Name	Azusa Canyon Road						Arrow Highway			Arrow Highway		
Approach	Northbound			Southbound			Eastbound			Westbound		
Lane Configuration												
Turning Movement	Left	Thru	Right	Left	Thru	Right	Left	Thru	Right	Left	Thru	Right
Lane Width [ft]	12.00	12.00	12.00	12.00	12.00	12.00	12.00	12.00	12.00	12.00	12.00	12.00
No. of Lanes in Pocket	1	0	0	0	0	0	1	0	0	1	0	0
Pocket Length [ft]	200.00	100.00	100.00	100.00	100.00	100.00	185.00	100.00	100.00	180.00	100.00	100.00
Speed [mph]	35.00			35.00			45.00			45.00		
Grade [%]	0.00			0.00			0.00			0.00		
Crosswalk	Yes			Yes			No			Yes		

Volumes

Name	Azusa Canyon Road						Arrow Highway			Arrow Highway		
Base Volume Input [veh/h]	120	5	442	15	13	29	14	1265	59	158	967	16
Base Volume Adjustment Factor	1.0000	1.0000	1.0000	1.0000	1.0000	1.0000	1.0000	1.0000	1.0000	1.0000	1.0000	1.0000
Heavy Vehicles Percentage [%]	2.00	2.00	2.00	2.00	2.00	2.00	2.00	2.00	2.00	2.00	2.00	2.00
Growth Rate	1.00	1.00	1.00	1.00	1.00	1.00	1.00	1.00	1.00	1.00	1.00	1.00
In-Process Volume [veh/h]	0	0	0	0	0	0	0	0	0	0	0	0
Site-Generated Trips [veh/h]	0	0	0	0	0	0	0	0	0	0	0	0
Diverted Trips [veh/h]	0	0	0	0	0	0	0	0	0	0	0	0
Pass-by Trips [veh/h]	0	0	0	0	0	0	0	0	0	0	0	0
Existing Site Adjustment Volume [veh/h]	0	0	0	0	0	0	0	0	0	0	0	0
Other Volume [veh/h]	0	0	0	0	0	0	0	0	0	0	0	0
Total Hourly Volume [veh/h]	120	5	442	15	13	29	14	1265	59	158	967	16
Peak Hour Factor	1.0000	1.0000	1.0000	1.0000	1.0000	1.0000	1.0000	1.0000	1.0000	1.0000	1.0000	1.0000
Other Adjustment Factor	1.0000	1.0000	1.0000	1.0000	1.0000	1.0000	1.0000	1.0000	1.0000	1.0000	1.0000	1.0000
Total 15-Minute Volume [veh/h]	30	1	111	4	3	7	4	316	15	40	242	4
Total Analysis Volume [veh/h]	120	5	442	15	13	29	14	1265	59	158	967	16
Pedestrian Volume [ped/h]	0			0			0			0		
Bicycle Volume [bicycles/h]	0			0			0			0		

Intersection Settings

Cycle Length [s]	100
Lost time [s]	10.00

Phasing & Timing

Control Type	Split	Split	Split	Split	Split	Split	Protecte	Permiss	Permiss	Protecte	Permiss	Permiss
Signal group	0	2	0	0	6	0	3	8	0	7	4	0
Auxiliary Signal Groups												
Lead / Lag	-	-	-	-	-	-	Lead	-	-	Lead	-	-

Movement, Approach, & Intersection Results

V/C, Movement V/C Ratio	0.08	0.00	0.28	0.01	0.03	0.03	0.01	0.40	0.04	0.10	0.30	0.01
Intersection LOS	D											
Intersection V/C	0.897											

Intersection Level Of Service Report
Intersection 10: 4th Street (NS) at Arrow Highway (EW)

Control Type:	Signalized	Delay (sec / veh):	-
Analysis Method:	ICU 1	Level Of Service:	A
Analysis Period:	15 minutes	Volume to Capacity (v/c):	0.551

Intersection Setup

Name	4th Street			4th Street			Arrow Highway			Arrow Highway		
Approach	Northbound			Southbound			Eastbound			Westbound		
Lane Configuration												
Turning Movement	Left	Thru	Right	Left	Thru	Right	Left	Thru	Right	Left	Thru	Right
Lane Width [ft]	12.00	12.00	12.00	12.00	12.00	12.00	12.00	12.00	12.00	12.00	12.00	12.00
No. of Lanes in Pocket	1	0	0	0	0	0	1	0	1	1	0	0
Pocket Length [ft]	55.00	100.00	100.00	100.00	100.00	100.00	145.00	100.00	150.00	195.00	100.00	100.00
Speed [mph]	35.00			25.00			45.00			45.00		
Grade [%]	0.00			0.00			0.00			0.00		
Crosswalk	Yes			Yes			Yes			Yes		

Volumes

Name	4th Street			4th Street			Arrow Highway			Arrow Highway		
Base Volume Input [veh/h]	143	1	44	11	0	12	5	1758	39	41	923	2
Base Volume Adjustment Factor	1.0000	1.0000	1.0000	1.0000	1.0000	1.0000	1.0000	1.0000	1.0000	1.0000	1.0000	1.0000
Heavy Vehicles Percentage [%]	2.00	2.00	2.00	2.00	2.00	2.00	2.00	2.00	2.00	2.00	2.00	2.00
Growth Rate	1.00	1.00	1.00	1.00	1.00	1.00	1.00	1.00	1.00	1.00	1.00	1.00
In-Process Volume [veh/h]	0	0	0	0	0	0	0	0	0	0	0	0
Site-Generated Trips [veh/h]	0	0	0	0	0	0	0	0	0	0	0	0
Diverted Trips [veh/h]	0	0	0	0	0	0	0	0	0	0	0	0
Pass-by Trips [veh/h]	0	0	0	0	0	0	0	0	0	0	0	0
Existing Site Adjustment Volume [veh/h]	0	0	0	0	0	0	0	0	0	0	0	0
Other Volume [veh/h]	0	0	0	0	0	0	0	0	0	0	0	0
Total Hourly Volume [veh/h]	143	1	44	11	0	12	5	1758	39	41	923	2
Peak Hour Factor	1.0000	1.0000	1.0000	1.0000	1.0000	1.0000	1.0000	1.0000	1.0000	1.0000	1.0000	1.0000
Other Adjustment Factor	1.0000	1.0000	1.0000	1.0000	1.0000	1.0000	1.0000	1.0000	1.0000	1.0000	1.0000	1.0000
Total 15-Minute Volume [veh/h]	36	0	11	3	0	3	1	440	10	10	231	1
Total Analysis Volume [veh/h]	143	1	44	11	0	12	5	1758	39	41	923	2
Pedestrian Volume [ped/h]	0			0			0			0		
Bicycle Volume [bicycles/h]	0			0			0			0		

Intersection Settings

Cycle Length [s]	100
Lost time [s]	10.00

Phasing & Timing

Control Type	Split	Split	Split	Split	Split	Split	Protecte	Permiss	Permiss	Protecte	Permiss	Permiss
Signal group	0	2	0	0	6	0	3	8	0	7	4	0
Auxiliary Signal Groups												
Lead / Lag	-	-	-	-	-	-	Lead	-	-	Lead	-	-

Movement, Approach, & Intersection Results

V/C, Movement V/C Ratio	0.04	0.05	0.03	0.01	0.00	0.01	0.00	0.37	0.02	0.03	0.29	0.00
Intersection LOS	A											
Intersection V/C	0.551											

Intersection Level Of Service Report
Intersection 11: Irwindale Avenue (NS) at I-210 WB Ramps (EW)

Control Type:	Signalized	Delay (sec / veh):	-
Analysis Method:	ICU 1	Level Of Service:	A
Analysis Period:	15 minutes	Volume to Capacity (v/c):	0.536

Intersection Setup

Name	Irwindale Avenue				I-210 WB Ramps	
Approach	Northbound		Southbound		Westbound	
Lane Configuration						
Turning Movement	Thru	Right	Left	Thru	Left	Right
Lane Width [ft]	12.00	12.00	12.00	12.00	12.00	12.00
No. of Lanes in Pocket	0	0	0	0	0	0
Pocket Length [ft]	100.00	100.00	100.00	100.00	100.00	100.00
Speed [mph]	35.00		35.00		35.00	
Grade [%]	0.00		0.00		0.00	
Crosswalk	No		No		Yes	

Volumes

Name	Irwindale Avenue				I-210 WB Ramps	
Base Volume Input [veh/h]	793	0	0	1473	192	206
Base Volume Adjustment Factor	1.0000	1.0000	1.0000	1.0000	1.0000	1.0000
Heavy Vehicles Percentage [%]	2.00	2.00	2.00	2.00	2.00	2.00
Growth Rate	1.00	1.00	1.00	1.00	1.00	1.00
In-Process Volume [veh/h]	0	0	0	0	0	0
Site-Generated Trips [veh/h]	0	0	0	0	0	0
Diverted Trips [veh/h]	0	0	0	0	0	0
Pass-by Trips [veh/h]	0	0	0	0	0	0
Existing Site Adjustment Volume [veh/h]	0	0	0	0	0	0
Other Volume [veh/h]	0	0	0	0	0	0
Total Hourly Volume [veh/h]	793	0	0	1473	192	206
Peak Hour Factor	1.0000	1.0000	1.0000	1.0000	1.0000	1.0000
Other Adjustment Factor	1.0000	1.0000	1.0000	1.0000	1.0000	1.0000
Total 15-Minute Volume [veh/h]	198	0	0	368	48	52
Total Analysis Volume [veh/h]	793	0	0	1473	192	206
Pedestrian Volume [ped/h]	0		0		0	
Bicycle Volume [bicycles/h]	0		0		0	

Intersection Settings

Cycle Length [s]	100
Lost time [s]	10.00

Phasing & Timing

Control Type	Permissive	Permissive	Permissive	Permissive	Split	Split
Signal group	2	0	0	6	7	0
Auxiliary Signal Groups						
Lead / Lag	-	-	-	-	Lead	-

Movement, Approach, & Intersection Results

V/C, Movement V/C Ratio	0.17	0.00	0.00	0.31	0.06	0.12
Intersection LOS	A					
Intersection V/C	0.536					

Intersection Level Of Service Report
Intersection 12: Irwindale Avenue (NS) at I-210 EB Ramps (EW)

Control Type:	Signalized	Delay (sec / veh):	-
Analysis Method:	ICU 1	Level Of Service:	C
Analysis Period:	15 minutes	Volume to Capacity (v/c):	0.741

Intersection Setup

Name	Irwindale Avenue			Irwindale Avenue			I-210 EB Ramps			I-210 EB Ramps		
Approach	Northbound			Southbound			Eastbound			Westbound		
Lane Configuration												
Turning Movement	Left	Thru	Right	Left	Thru	Right	Left	Thru	Right	Left	Thru	Right
Lane Width [ft]	12.00	12.00	12.00	12.00	12.00	12.00	12.00	12.00	12.00	12.00	12.00	12.00
No. of Lanes in Pocket	0	0	1	1	0	0	0	0	0	0	0	0
Pocket Length [ft]	100.00	100.00	505.00	330.00	100.00	100.00	100.00	100.00	100.00	100.00	100.00	100.00
Speed [mph]	35.00			35.00			35.00			35.00		
Grade [%]	0.00			0.00			0.00			0.00		
Crosswalk	No			No			No			Yes		

Volumes

Name	Irwindale Avenue			Irwindale Avenue			I-210 EB Ramps			I-210 EB Ramps		
Base Volume Input [veh/h]	0	1034	336	416	792	0	375	0	456	0	0	0
Base Volume Adjustment Factor	1.0000	1.0000	1.0000	1.0000	1.0000	1.0000	1.0000	1.0000	1.0000	1.0000	1.0000	1.0000
Heavy Vehicles Percentage [%]	2.00	2.00	2.00	2.00	2.00	2.00	2.00	2.00	2.00	2.00	2.00	2.00
Growth Rate	1.00	1.00	1.00	1.00	1.00	1.00	1.00	1.00	1.00	1.00	1.00	1.00
In-Process Volume [veh/h]	0	0	0	0	0	0	0	0	0	0	0	0
Site-Generated Trips [veh/h]	0	0	0	0	0	0	0	0	0	0	0	0
Diverted Trips [veh/h]	0	0	0	0	0	0	0	0	0	0	0	0
Pass-by Trips [veh/h]	0	0	0	0	0	0	0	0	0	0	0	0
Existing Site Adjustment Volume [veh/h]	0	0	0	0	0	0	0	0	0	0	0	0
Other Volume [veh/h]	0	0	0	0	0	0	0	0	0	0	0	0
Total Hourly Volume [veh/h]	0	1034	336	416	792	0	375	0	456	0	0	0
Peak Hour Factor	1.0000	1.0000	1.0000	1.0000	1.0000	1.0000	1.0000	1.0000	1.0000	1.0000	1.0000	1.0000
Other Adjustment Factor	1.0000	1.0000	1.0000	1.0000	1.0000	1.0000	1.0000	1.0000	1.0000	1.0000	1.0000	1.0000
Total 15-Minute Volume [veh/h]	0	259	84	104	198	0	94	0	114	0	0	0
Total Analysis Volume [veh/h]	0	1034	336	416	792	0	375	0	456	0	0	0
Pedestrian Volume [ped/h]	0			0			0			0		
Bicycle Volume [bicycles/h]	0			0			0			0		

Intersection Settings

Cycle Length [s]	100
Lost time [s]	10.00

Phasing & Timing

Control Type	Permiss	Permiss	Permiss	Protecte	Permiss	Permiss	Split	Permiss	Split	Permiss	Permiss	Permiss
Signal group	0	2	0	1	6	0	3	0	0	0	0	0
Auxiliary Signal Groups												
Lead / Lag	-	-	-	Lead	-	-	Lead	-	-	-	-	-

Movement, Approach, & Intersection Results

V/C, Movement V/C Ratio	0.00	0.32	0.21	0.13	0.25	0.00	0.12	0.00	0.17	0.00	0.00	0.00
Intersection LOS	C											
Intersection V/C	0.741											

Intersection Level Of Service Report
Intersection 13: Irwindale Avenue (NS) at Jardin De Roca/Irwindale Rd (EW)

Control Type:	Signalized	Delay (sec / veh):	-
Analysis Method:	ICU 1	Level Of Service:	B
Analysis Period:	15 minutes	Volume to Capacity (v/c):	0.692

Intersection Setup

Name	Irwindale Avenue			Irwindale Avenue			Jardin De Roca			Irwindale Road		
Approach	Northbound			Southbound			Eastbound			Westbound		
Lane Configuration												
Turning Movement	Left	Thru	Right	Left	Thru	Right	Left	Thru	Right	Left	Thru	Right
Lane Width [ft]	12.00	12.00	12.00	12.00	12.00	12.00	12.00	12.00	12.00	12.00	12.00	12.00
No. of Lanes in Pocket	1	0	1	1	0	0	0	0	0	0	0	0
Pocket Length [ft]	130.00	100.00	180.00	245.00	100.00	100.00	100.00	100.00	100.00	100.00	100.00	100.00
Speed [mph]	35.00			35.00			25.00			25.00		
Grade [%]	0.00			0.00			0.00			0.00		
Crosswalk	No			No			No			Yes		

Volumes

Name	Irwindale Avenue			Irwindale Avenue			Jardin De Roca			Irwindale Road		
Base Volume Input [veh/h]	28	1163	42	35	1205	7	25	0	80	113	0	178
Base Volume Adjustment Factor	1.0000	1.0000	1.0000	1.0000	1.0000	1.0000	1.0000	1.0000	1.0000	1.0000	1.0000	1.0000
Heavy Vehicles Percentage [%]	2.00	2.00	2.00	2.00	2.00	2.00	2.00	2.00	2.00	2.00	2.00	2.00
Growth Rate	1.00	1.00	1.00	1.00	1.00	1.00	1.00	1.00	1.00	1.00	1.00	1.00
In-Process Volume [veh/h]	0	0	0	0	0	0	0	0	0	0	0	0
Site-Generated Trips [veh/h]	0	0	0	0	0	0	0	0	0	0	0	0
Diverted Trips [veh/h]	0	0	0	0	0	0	0	0	0	0	0	0
Pass-by Trips [veh/h]	0	0	0	0	0	0	0	0	0	0	0	0
Existing Site Adjustment Volume [veh/h]	0	0	0	0	0	0	0	0	0	0	0	0
Other Volume [veh/h]	0	0	0	0	0	0	0	0	0	0	0	0
Total Hourly Volume [veh/h]	28	1163	42	35	1205	7	25	0	80	113	0	178
Peak Hour Factor	1.0000	1.0000	1.0000	1.0000	1.0000	1.0000	1.0000	1.0000	1.0000	1.0000	1.0000	1.0000
Other Adjustment Factor	1.0000	1.0000	1.0000	1.0000	1.0000	1.0000	1.0000	1.0000	1.0000	1.0000	1.0000	1.0000
Total 15-Minute Volume [veh/h]	7	291	11	9	301	2	6	0	20	28	0	45
Total Analysis Volume [veh/h]	28	1163	42	35	1205	7	25	0	80	113	0	178
Pedestrian Volume [ped/h]	0			0			0			0		
Bicycle Volume [bicycles/h]	0			0			0			0		

Intersection Settings

Cycle Length [s]	100
Lost time [s]	10.00

Phasing & Timing

Control Type	Protecte	Permiss	Permiss	Protecte	Permiss	Permiss	Permiss	Permiss	Permiss	Permiss	Permiss	Permiss
Signal group	5	2	0	1	6	0	3	0	0	7	0	0
Auxiliary Signal Groups												
Lead / Lag	Lead	-	-	Lead	-	-	Lead	-	-	Lead	-	-

Movement, Approach, & Intersection Results

V/C, Movement V/C Ratio	0.02	0.36	0.03	0.02	0.38	0.00	0.02	0.00	0.07	0.07	0.00	0.28
Intersection LOS	B											
Intersection V/C	0.692											

Intersection Level Of Service Report
Intersection 14: Irwindale Avenue (NS) at 1st Street (EW)

Control Type:	Signalized	Delay (sec / veh):	-
Analysis Method:	ICU 1	Level Of Service:	A
Analysis Period:	15 minutes	Volume to Capacity (v/c):	0.444

Intersection Setup

Name	Irwindale Avenue			Irwindale Avenue			1st Street			1st Street		
Approach	Northbound			Southbound			Eastbound			Westbound		
Lane Configuration												
Turning Movement	Left	Thru	Right	Left	Thru	Right	Left	Thru	Right	Left	Thru	Right
Lane Width [ft]	12.00	12.00	12.00	12.00	12.00	12.00	12.00	12.00	12.00	12.00	12.00	12.00
No. of Lanes in Pocket	1	0	1	1	0	1	1	0	1	1	0	1
Pocket Length [ft]	100.00	100.00	70.00	120.00	100.00	240.00	90.00	100.00	95.00	75.00	100.00	75.00
Speed [mph]	35.00			35.00			35.00			25.00		
Grade [%]	0.00			0.00			0.00			0.00		
Crosswalk	Yes			No			Yes			Yes		

Volumes

Name	Irwindale Avenue			Irwindale Avenue			1st Street			1st Street		
Base Volume Input [veh/h]	11	878	4	9	1337	53	167	0	43	10	0	6
Base Volume Adjustment Factor	1.0000	1.0000	1.0000	1.0000	1.0000	1.0000	1.0000	1.0000	1.0000	1.0000	1.0000	1.0000
Heavy Vehicles Percentage [%]	2.00	2.00	2.00	2.00	2.00	2.00	2.00	2.00	2.00	2.00	2.00	2.00
Growth Rate	1.00	1.00	1.00	1.00	1.00	1.00	1.00	1.00	1.00	1.00	1.00	1.00
In-Process Volume [veh/h]	0	0	0	0	0	0	0	0	0	0	0	0
Site-Generated Trips [veh/h]	0	0	0	0	0	0	0	0	0	0	0	0
Diverted Trips [veh/h]	0	0	0	0	0	0	0	0	0	0	0	0
Pass-by Trips [veh/h]	0	0	0	0	0	0	0	0	0	0	0	0
Existing Site Adjustment Volume [veh/h]	0	0	0	0	0	0	0	0	0	0	0	0
Other Volume [veh/h]	0	0	0	0	0	0	0	0	0	0	0	0
Total Hourly Volume [veh/h]	11	878	4	9	1337	53	167	0	43	10	0	6
Peak Hour Factor	1.0000	1.0000	1.0000	1.0000	1.0000	1.0000	1.0000	1.0000	1.0000	1.0000	1.0000	1.0000
Other Adjustment Factor	1.0000	1.0000	1.0000	1.0000	1.0000	1.0000	1.0000	1.0000	1.0000	1.0000	1.0000	1.0000
Total 15-Minute Volume [veh/h]	3	220	1	2	334	13	42	0	11	3	0	2
Total Analysis Volume [veh/h]	11	878	4	9	1337	53	167	0	43	10	0	6
Pedestrian Volume [ped/h]	0			0			0			0		
Bicycle Volume [bicycles/h]	0			0			0			0		

Intersection Settings

Cycle Length [s]	100
Lost time [s]	10.00

Phasing & Timing

Control Type	Permiss	Permiss	Permiss	Permiss	Permiss	Permiss	Split	Split	Split	Split	Split	Split
Signal group	0	2	0	0	6	0	0	8	0	0	4	0
Auxiliary Signal Groups												
Lead / Lag	-	-	-	-	-	-	-	-	-	-	-	-

Movement, Approach, & Intersection Results

V/C, Movement V/C Ratio	0.01	0.28	0.28	0.01	0.28	0.03	0.05	0.00	0.03	0.01	0.00	0.00
Intersection LOS	A											
Intersection V/C	0.444											

Intersection Level Of Service Report
Intersection 15: Irwindale Avenue (NS) at Gladstone Street (EW)

Control Type:	Signalized	Delay (sec / veh):	-
Analysis Method:	ICU 1	Level Of Service:	B
Analysis Period:	15 minutes	Volume to Capacity (v/c):	0.646

Intersection Setup

Name	Irwindale Avenue			Irwindale Avenue			Gladstone Street			Gladstone Street		
Approach	Northbound			Southbound			Eastbound			Westbound		
Lane Configuration												
Turning Movement	Left	Thru	Right	Left	Thru	Right	Left	Thru	Right	Left	Thru	Right
Lane Width [ft]	12.00	12.00	12.00	12.00	12.00	12.00	12.00	12.00	12.00	12.00	12.00	12.00
No. of Lanes in Pocket	1	0	0	2	0	0	1	0	0	1	0	1
Pocket Length [ft]	120.00	100.00	100.00	210.00	100.00	100.00	50.00	100.00	100.00	200.00	100.00	190.00
Speed [mph]	35.00			35.00			25.00			40.00		
Grade [%]	0.00			0.00			0.00			0.00		
Crosswalk	Yes			Yes			Yes			Yes		

Volumes

Name	Irwindale Avenue			Irwindale Avenue			Gladstone Street			Gladstone Street		
Base Volume Input [veh/h]	1	687	308	530	889	8	5	85	27	150	4	207
Base Volume Adjustment Factor	1.0000	1.0000	1.0000	1.0000	1.0000	1.0000	1.0000	1.0000	1.0000	1.0000	1.0000	1.0000
Heavy Vehicles Percentage [%]	2.00	2.00	2.00	2.00	2.00	2.00	2.00	2.00	2.00	2.00	2.00	2.00
Growth Rate	1.00	1.00	1.00	1.00	1.00	1.00	1.00	1.00	1.00	1.00	1.00	1.00
In-Process Volume [veh/h]	0	0	0	0	0	0	0	0	0	0	0	0
Site-Generated Trips [veh/h]	0	0	0	0	0	0	0	0	0	0	0	0
Diverted Trips [veh/h]	0	0	0	0	0	0	0	0	0	0	0	0
Pass-by Trips [veh/h]	0	0	0	0	0	0	0	0	0	0	0	0
Existing Site Adjustment Volume [veh/h]	0	0	0	0	0	0	0	0	0	0	0	0
Other Volume [veh/h]	0	0	0	0	0	0	0	0	0	0	0	0
Total Hourly Volume [veh/h]	1	687	308	530	889	8	5	85	27	150	4	207
Peak Hour Factor	1.0000	1.0000	1.0000	1.0000	1.0000	1.0000	1.0000	1.0000	1.0000	1.0000	1.0000	1.0000
Other Adjustment Factor	1.0000	1.0000	1.0000	1.0000	1.0000	1.0000	1.0000	1.0000	1.0000	1.0000	1.0000	1.0000
Total 15-Minute Volume [veh/h]	0	172	77	133	222	2	1	21	7	38	1	52
Total Analysis Volume [veh/h]	1	687	308	530	889	8	5	85	27	150	4	207
Pedestrian Volume [ped/h]	0			0			0			0		
Bicycle Volume [bicycles/h]	0			0			0			0		

Intersection Settings

Cycle Length [s]	100
Lost time [s]	10.00

Phasing & Timing

Control Type	Protecte	Permiss	Permiss	Protecte	Permiss	Permiss	Permiss	Permiss	Permiss	Permiss	Permiss	Overlap
Signal group	5	2	0	1	6	0	0	8	0	0	4	4
Auxiliary Signal Groups												1,4
Lead / Lag	Lead	-	-	Lead	-	-	-	-	-	-	-	-

Movement, Approach, & Intersection Results

V/C, Movement V/C Ratio	0.00	0.21	0.19	0.17	0.28	0.28	0.00	0.05	0.02	0.09	0.00	0.00
Intersection LOS	B											
Intersection V/C	0.646											

Intersection Level Of Service Report
Intersection 16: Irwindale Avenue (NS) at Arrow Highway (EW)

Control Type:	Signalized	Delay (sec / veh):	-
Analysis Method:	ICU 1	Level Of Service:	C
Analysis Period:	15 minutes	Volume to Capacity (v/c):	0.754

Intersection Setup

Name	Irwindale Avenue			Irwindale Avenue			Arrow Highway			Arrow Highway		
Approach	Northbound			Southbound			Eastbound			Westbound		
Lane Configuration												
Turning Movement	Left	Thru	Right	Left	Thru	Right	Left	Thru	Right	Left	Thru	Right
Lane Width [ft]	12.00	12.00	12.00	12.00	12.00	12.00	12.00	12.00	12.00	12.00	12.00	12.00
No. of Lanes in Pocket	1	0	0	1	0	1	2	0	0	1	0	0
Pocket Length [ft]	175.00	100.00	100.00	185.00	100.00	185.00	205.00	100.00	100.00	335.00	100.00	100.00
Speed [mph]	35.00			35.00			45.00			45.00		
Grade [%]	0.00			0.00			0.00			0.00		
Crosswalk	Yes			Yes			Yes			Yes		

Volumes

Name	Irwindale Avenue			Irwindale Avenue			Arrow Highway			Arrow Highway		
Base Volume Input [veh/h]	91	488	100	191	714	363	373	1315	73	99	475	63
Base Volume Adjustment Factor	1.0000	1.0000	1.0000	1.0000	1.0000	1.0000	1.0000	1.0000	1.0000	1.0000	1.0000	1.0000
Heavy Vehicles Percentage [%]	2.00	2.00	2.00	2.00	2.00	2.00	2.00	2.00	2.00	2.00	2.00	2.00
Growth Rate	1.00	1.00	1.00	1.00	1.00	1.00	1.00	1.00	1.00	1.00	1.00	1.00
In-Process Volume [veh/h]	0	0	0	0	0	0	0	0	0	0	0	0
Site-Generated Trips [veh/h]	0	0	0	0	0	0	0	0	0	0	0	0
Diverted Trips [veh/h]	0	0	0	0	0	0	0	0	0	0	0	0
Pass-by Trips [veh/h]	0	0	0	0	0	0	0	0	0	0	0	0
Existing Site Adjustment Volume [veh/h]	0	0	0	0	0	0	0	0	0	0	0	0
Other Volume [veh/h]	0	0	0	0	0	0	0	0	0	0	0	0
Total Hourly Volume [veh/h]	91	488	100	191	714	363	373	1315	73	99	475	63
Peak Hour Factor	1.0000	1.0000	1.0000	1.0000	1.0000	1.0000	1.0000	1.0000	1.0000	1.0000	1.0000	1.0000
Other Adjustment Factor	1.0000	1.0000	1.0000	1.0000	1.0000	1.0000	1.0000	1.0000	1.0000	1.0000	1.0000	1.0000
Total 15-Minute Volume [veh/h]	23	122	25	48	179	91	93	329	18	25	119	16
Total Analysis Volume [veh/h]	91	488	100	191	714	363	373	1315	73	99	475	63
Pedestrian Volume [ped/h]	0			0			0			0		
Bicycle Volume [bicycles/h]	0			0			0			0		

Intersection Settings

Cycle Length [s]	100
Lost time [s]	10.00

Phasing & Timing

Control Type	Protecte	Permiss	Permiss	Protecte	Permiss	Overlap	Protecte	Permiss	Permiss	Protecte	Permiss	Permiss
Signal group	5	2	0	1	6	6	3	8	0	7	4	0
Auxiliary Signal Groups						3,6						
Lead / Lag	Lead	-	-	Lead	-	-	Lead	-	-	Lead	-	-

Movement, Approach, & Intersection Results

V/C, Movement V/C Ratio	0.06	0.18	0.18	0.12	0.22	0.11	0.12	0.29	0.29	0.06	0.17	0.17
Intersection LOS	C											
Intersection V/C	0.754											

Intersection Level Of Service Report
Intersection 17: Vincent Avenue (NS) at Gladstone Street (EW)

Control Type:	Signalized	Delay (sec / veh):	-
Analysis Method:	ICU 1	Level Of Service:	D
Analysis Period:	15 minutes	Volume to Capacity (v/c):	0.836

Intersection Setup

Name	Vincent Avenue			Vincent Avenue			Gladstone Street			Gladstone Street		
Approach	Northbound			Southbound			Eastbound			Westbound		
Lane Configuration												
Turning Movement	Left	Thru	Right	Left	Thru	Right	Left	Thru	Right	Left	Thru	Right
Lane Width [ft]	12.00	12.00	12.00	12.00	12.00	12.00	12.00	12.00	12.00	12.00	12.00	12.00
No. of Lanes in Pocket	1	0	0	0	0	0	2	0	0	1	0	0
Pocket Length [ft]	195.00	100.00	100.00	100.00	100.00	100.00	230.00	100.00	100.00	175.00	100.00	100.00
Speed [mph]	45.00			25.00			45.00			45.00		
Grade [%]	0.00			0.00			0.00			0.00		
Crosswalk	Yes			Yes			No			Yes		

Volumes

Name	Vincent Avenue			Vincent Avenue			Gladstone Street			Gladstone Street		
Base Volume Input [veh/h]	113	24	475	16	25	18	14	862	160	150	203	3
Base Volume Adjustment Factor	1.0000	1.0000	1.0000	1.0000	1.0000	1.0000	1.0000	1.0000	1.0000	1.0000	1.0000	1.0000
Heavy Vehicles Percentage [%]	2.00	2.00	2.00	2.00	2.00	2.00	2.00	2.00	2.00	2.00	2.00	2.00
Growth Rate	1.00	1.00	1.00	1.00	1.00	1.00	1.00	1.00	1.00	1.00	1.00	1.00
In-Process Volume [veh/h]	0	0	0	0	0	0	0	0	0	0	0	0
Site-Generated Trips [veh/h]	0	0	0	0	0	0	0	0	0	0	0	0
Diverted Trips [veh/h]	0	0	0	0	0	0	0	0	0	0	0	0
Pass-by Trips [veh/h]	0	0	0	0	0	0	0	0	0	0	0	0
Existing Site Adjustment Volume [veh/h]	0	0	0	0	0	0	0	0	0	0	0	0
Other Volume [veh/h]	0	0	0	0	0	0	0	0	0	0	0	0
Total Hourly Volume [veh/h]	113	24	475	16	25	18	14	862	160	150	203	3
Peak Hour Factor	1.0000	1.0000	1.0000	1.0000	1.0000	1.0000	1.0000	1.0000	1.0000	1.0000	1.0000	1.0000
Other Adjustment Factor	1.0000	1.0000	1.0000	1.0000	1.0000	1.0000	1.0000	1.0000	1.0000	1.0000	1.0000	1.0000
Total 15-Minute Volume [veh/h]	28	6	119	4	6	5	4	216	40	38	51	1
Total Analysis Volume [veh/h]	113	24	475	16	25	18	14	862	160	150	203	3
Pedestrian Volume [ped/h]	0			0			0			0		
Bicycle Volume [bicycles/h]	0			0			0			0		

Intersection Settings

Cycle Length [s]	100
Lost time [s]	10.00

Phasing & Timing

Control Type	Split	Split	Split	Split	Split	Split	Protecte	Permiss	Permiss	Protecte	Permiss	Permiss
Signal group	0	2	0	0	6	0	3	8	0	7	4	0
Auxiliary Signal Groups												
Lead / Lag	-	-	-	-	-	-	Lead	-	-	Lead	-	-

Movement, Approach, & Intersection Results

V/C, Movement V/C Ratio	0.07	0.02	0.30	0.01	0.03	0.03	0.00	0.32	0.32	0.09	0.06	0.06
Intersection LOS	D											
Intersection V/C	0.836											

Intersection Level Of Service Report
Intersection 18: Vincent Avenue (NS) at Arrow Highway (EW)

Control Type:	Signalized	Delay (sec / veh):	-
Analysis Method:	ICU 1	Level Of Service:	C
Analysis Period:	15 minutes	Volume to Capacity (v/c):	0.776

Intersection Setup

Name	Vincent Avenue			Vincent Avenue			Arrow Highway			Arrow Highway		
Approach	Northbound			Southbound			Eastbound			Westbound		
Lane Configuration												
Turning Movement	Left	Thru	Right	Left	Thru	Right	Left	Thru	Right	Left	Thru	Right
Lane Width [ft]	12.00	12.00	12.00	12.00	12.00	12.00	12.00	12.00	12.00	12.00	12.00	12.00
No. of Lanes in Pocket	1	0	0	1	0	0	1	0	0	1	0	0
Pocket Length [ft]	200.00	100.00	100.00	200.00	100.00	100.00	215.00	100.00	100.00	160.00	100.00	100.00
Speed [mph]	45.00			45.00			45.00			45.00		
Grade [%]	0.00			0.00			0.00			0.00		
Crosswalk	Yes			Yes			Yes			Yes		

Volumes

Name	Vincent Avenue			Vincent Avenue			Arrow Highway			Arrow Highway		
Base Volume Input [veh/h]	78	314	143	38	276	84	228	1417	171	106	485	40
Base Volume Adjustment Factor	1.0000	1.0000	1.0000	1.0000	1.0000	1.0000	1.0000	1.0000	1.0000	1.0000	1.0000	1.0000
Heavy Vehicles Percentage [%]	2.00	2.00	2.00	2.00	2.00	2.00	2.00	2.00	2.00	2.00	2.00	2.00
Growth Rate	1.00	1.00	1.00	1.00	1.00	1.00	1.00	1.00	1.00	1.00	1.00	1.00
In-Process Volume [veh/h]	0	0	0	0	0	0	0	0	0	0	0	0
Site-Generated Trips [veh/h]	0	0	0	0	0	0	0	0	0	0	0	0
Diverted Trips [veh/h]	0	0	0	0	0	0	0	0	0	0	0	0
Pass-by Trips [veh/h]	0	0	0	0	0	0	0	0	0	0	0	0
Existing Site Adjustment Volume [veh/h]	0	0	0	0	0	0	0	0	0	0	0	0
Other Volume [veh/h]	0	0	0	0	0	0	0	0	0	0	0	0
Total Hourly Volume [veh/h]	78	314	143	38	276	84	228	1417	171	106	485	40
Peak Hour Factor	1.0000	1.0000	1.0000	1.0000	1.0000	1.0000	1.0000	1.0000	1.0000	1.0000	1.0000	1.0000
Other Adjustment Factor	1.0000	1.0000	1.0000	1.0000	1.0000	1.0000	1.0000	1.0000	1.0000	1.0000	1.0000	1.0000
Total 15-Minute Volume [veh/h]	20	79	36	10	69	21	57	354	43	27	121	10
Total Analysis Volume [veh/h]	78	314	143	38	276	84	228	1417	171	106	485	40
Pedestrian Volume [ped/h]	0			0			0			0		
Bicycle Volume [bicycles/h]	0			0			0			0		

Intersection Settings

Cycle Length [s]	100
Lost time [s]	10.00

Phasing & Timing

Control Type	Permiss	Permiss	Permiss	Permiss	Permiss	Permiss	Permiss	Permiss	Permiss	Permiss	Permiss	Permiss
Signal group	0	2	0	0	6	0	0	8	0	0	4	0
Auxiliary Signal Groups												
Lead / Lag	-	-	-	-	-	-	-	-	-	-	-	-

Movement, Approach, & Intersection Results

V/C, Movement V/C Ratio	0.05	0.14	0.14	0.02	0.11	0.11	0.14	0.44	0.11	0.07	0.15	0.03
Intersection LOS	C											
Intersection V/C	0.776											

Intersection Level Of Service Report
Intersection 21: Vincent Avenue (NS) at Cypress Street (EW)

Control Type:	Signalized	Delay (sec / veh):	-
Analysis Method:	ICU 1	Level Of Service:	C
Analysis Period:	15 minutes	Volume to Capacity (v/c):	0.720

Intersection Setup

Name	Vincent Avenue			Vincent Avenue			Cypress Street			Cypress Street		
Approach	Northbound			Southbound			Eastbound			Westbound		
Lane Configuration												
Turning Movement	Left	Thru	Right	Left	Thru	Right	Left	Thru	Right	Left	Thru	Right
Lane Width [ft]	12.00	12.00	12.00	12.00	12.00	12.00	12.00	12.00	12.00	12.00	12.00	12.00
No. of Lanes in Pocket	1	0	0	1	0	0	1	0	0	1	0	0
Pocket Length [ft]	120.00	100.00	100.00	120.00	100.00	100.00	100.00	100.00	100.00	150.00	100.00	100.00
Speed [mph]	40.00			45.00			40.00			40.00		
Grade [%]	0.00			0.00			0.00			0.00		
Crosswalk	Yes			Yes			Yes			Yes		

Volumes

Name	Vincent Avenue			Vincent Avenue			Cypress Street			Cypress Street		
Base Volume Input [veh/h]	59	447	138	59	448	30	88	984	112	92	295	41
Base Volume Adjustment Factor	1.0000	1.0000	1.0000	1.0000	1.0000	1.0000	1.0000	1.0000	1.0000	1.0000	1.0000	1.0000
Heavy Vehicles Percentage [%]	2.00	2.00	2.00	2.00	2.00	2.00	2.00	2.00	2.00	2.00	2.00	2.00
Growth Rate	1.00	1.00	1.00	1.00	1.00	1.00	1.00	1.00	1.00	1.00	1.00	1.00
In-Process Volume [veh/h]	0	0	0	0	0	0	0	0	0	0	0	0
Site-Generated Trips [veh/h]	0	0	0	0	0	0	0	0	0	0	0	0
Diverted Trips [veh/h]	0	0	0	0	0	0	0	0	0	0	0	0
Pass-by Trips [veh/h]	0	0	0	0	0	0	0	0	0	0	0	0
Existing Site Adjustment Volume [veh/h]	0	0	0	0	0	0	0	0	0	0	0	0
Other Volume [veh/h]	0	0	0	0	0	0	0	0	0	0	0	0
Total Hourly Volume [veh/h]	59	447	138	59	448	30	88	984	112	92	295	41
Peak Hour Factor	1.0000	1.0000	1.0000	1.0000	1.0000	1.0000	1.0000	1.0000	1.0000	1.0000	1.0000	1.0000
Other Adjustment Factor	1.0000	1.0000	1.0000	1.0000	1.0000	1.0000	1.0000	1.0000	1.0000	1.0000	1.0000	1.0000
Total 15-Minute Volume [veh/h]	15	112	35	15	112	8	22	246	28	23	74	10
Total Analysis Volume [veh/h]	59	447	138	59	448	30	88	984	112	92	295	41
Pedestrian Volume [ped/h]	0			0			0			0		
Bicycle Volume [bicycles/h]	0			0			0			0		

Intersection Settings

Cycle Length [s]	100
Lost time [s]	10.00

Phasing & Timing

Control Type	Permiss	Permiss	Permiss	Permiss	Permiss	Permiss	Permiss	Permiss	Permiss	Permiss	Permiss	Permiss
Signal group	0	2	0	0	6	0	0	8	0	0	4	0
Auxiliary Signal Groups												
Lead / Lag	-	-	-	-	-	-	-	-	-	-	-	-

Movement, Approach, & Intersection Results

V/C, Movement V/C Ratio	0.04	0.18	0.18	0.04	0.15	0.15	0.06	0.34	0.34	0.06	0.11	0.11
Intersection LOS	C											
Intersection V/C	0.720											

Intersection Level Of Service Report

Intersection 22: Vincent Avenue (NS) at San Bernardino Road (EW)

Control Type:	Signalized	Delay (sec / veh):	-
Analysis Method:	ICU 1	Level Of Service:	B
Analysis Period:	15 minutes	Volume to Capacity (v/c):	0.652

Intersection Setup

Name	Vincent Avenue			Vincent Avenue			San Bernardino Road			San Berardino Road		
Approach	Northbound			Southbound			Eastbound			Westbound		
Lane Configuration												
Turning Movement	Left	Thru	Right	Left	Thru	Right	Left	Thru	Right	Left	Thru	Right
Lane Width [ft]	12.00	12.00	12.00	12.00	12.00	12.00	12.00	12.00	12.00	12.00	12.00	12.00
No. of Lanes in Pocket	1	0	0	1	0	0	1	0	0	1	0	0
Pocket Length [ft]	120.00	100.00	100.00	150.00	100.00	100.00	150.00	100.00	100.00	165.00	100.00	100.00
Speed [mph]	35.00			40.00			40.00			40.00		
Grade [%]	0.00			0.00			0.00			0.00		
Crosswalk	Yes			Yes			Yes			Yes		

Volumes

Name	Vincent Avenue			Vincent Avenue			San Bernardino Road			San Berardino Road		
Base Volume Input [veh/h]	94	563	77	76	574	48	112	651	110	98	273	80
Base Volume Adjustment Factor	1.0000	1.0000	1.0000	1.0000	1.0000	1.0000	1.0000	1.0000	1.0000	1.0000	1.0000	1.0000
Heavy Vehicles Percentage [%]	2.00	2.00	2.00	2.00	2.00	2.00	2.00	2.00	2.00	2.00	2.00	2.00
Growth Rate	1.00	1.00	1.00	1.00	1.00	1.00	1.00	1.00	1.00	1.00	1.00	1.00
In-Process Volume [veh/h]	0	0	0	0	0	0	0	0	0	0	0	0
Site-Generated Trips [veh/h]	0	0	0	0	0	0	0	0	0	0	0	0
Diverted Trips [veh/h]	0	0	0	0	0	0	0	0	0	0	0	0
Pass-by Trips [veh/h]	0	0	0	0	0	0	0	0	0	0	0	0
Existing Site Adjustment Volume [veh/h]	0	0	0	0	0	0	0	0	0	0	0	0
Other Volume [veh/h]	0	0	0	0	0	0	0	0	0	0	0	0
Total Hourly Volume [veh/h]	94	563	77	76	574	48	112	651	110	98	273	80
Peak Hour Factor	1.0000	1.0000	1.0000	1.0000	1.0000	1.0000	1.0000	1.0000	1.0000	1.0000	1.0000	1.0000
Other Adjustment Factor	1.0000	1.0000	1.0000	1.0000	1.0000	1.0000	1.0000	1.0000	1.0000	1.0000	1.0000	1.0000
Total 15-Minute Volume [veh/h]	24	141	19	19	144	12	28	163	28	25	68	20
Total Analysis Volume [veh/h]	94	563	77	76	574	48	112	651	110	98	273	80
Pedestrian Volume [ped/h]	0			0			0			0		
Bicycle Volume [bicycles/h]	0			0			0			0		

Intersection Settings

Cycle Length [s]	100
Lost time [s]	10.00

Phasing & Timing

Control Type	Permiss	Permiss	Permiss	Permiss	Permiss	Permiss	Protecte	Permiss	Permiss	Protecte	Permiss	Permiss
Signal group	0	2	0	0	6	0	3	8	0	7	4	0
Auxiliary Signal Groups												
Lead / Lag	-	-	-	-	-	-	Lead	-	-	Lead	-	-

Movement, Approach, & Intersection Results

V/C, Movement V/C Ratio	0.06	0.20	0.20	0.05	0.19	0.19	0.07	0.24	0.24	0.06	0.11	0.11
Intersection LOS	B											
Intersection V/C	0.652											

Intersection Level Of Service Report
Intersection 23: Vincent Avenue (NS) at Badillo Street (EW)

Control Type:	Signalized	Delay (sec / veh):	-
Analysis Method:	ICU 1	Level Of Service:	C
Analysis Period:	15 minutes	Volume to Capacity (v/c):	0.757

Intersection Setup

Name	Vincent Avenue			Vincent Avenue			Dadillo Street			Badillo Street		
Approach	Northbound			Southbound			Eastbound			Westbound		
Lane Configuration												
Turning Movement	Left	Thru	Right	Left	Thru	Right	Left	Thru	Right	Left	Thru	Right
Lane Width [ft]	12.00	12.00	12.00	12.00	12.00	12.00	12.00	12.00	12.00	12.00	12.00	12.00
No. of Lanes in Pocket	1	0	0	1	0	0	1	0	0	1	0	0
Pocket Length [ft]	200.00	100.00	100.00	190.00	100.00	100.00	195.00	100.00	100.00	195.00	100.00	100.00
Speed [mph]	40.00			35.00			45.00			45.00		
Grade [%]	0.00			0.00			0.00			0.00		
Crosswalk	Yes			Yes			Yes			Yes		

Volumes

Name	Vincent Avenue			Vincent Avenue			Dadillo Street			Badillo Street		
Base Volume Input [veh/h]	93	584	144	62	702	53	65	953	172	130	421	56
Base Volume Adjustment Factor	1.0000	1.0000	1.0000	1.0000	1.0000	1.0000	1.0000	1.0000	1.0000	1.0000	1.0000	1.0000
Heavy Vehicles Percentage [%]	2.00	2.00	2.00	2.00	2.00	2.00	2.00	2.00	2.00	2.00	2.00	2.00
Growth Rate	1.00	1.00	1.00	1.00	1.00	1.00	1.00	1.00	1.00	1.00	1.00	1.00
In-Process Volume [veh/h]	0	0	0	0	0	0	0	0	0	0	0	0
Site-Generated Trips [veh/h]	0	0	0	0	0	0	0	0	0	0	0	0
Diverted Trips [veh/h]	0	0	0	0	0	0	0	0	0	0	0	0
Pass-by Trips [veh/h]	0	0	0	0	0	0	0	0	0	0	0	0
Existing Site Adjustment Volume [veh/h]	0	0	0	0	0	0	0	0	0	0	0	0
Other Volume [veh/h]	0	0	0	0	0	0	0	0	0	0	0	0
Total Hourly Volume [veh/h]	93	584	144	62	702	53	65	953	172	130	421	56
Peak Hour Factor	1.0000	1.0000	1.0000	1.0000	1.0000	1.0000	1.0000	1.0000	1.0000	1.0000	1.0000	1.0000
Other Adjustment Factor	1.0000	1.0000	1.0000	1.0000	1.0000	1.0000	1.0000	1.0000	1.0000	1.0000	1.0000	1.0000
Total 15-Minute Volume [veh/h]	23	146	36	16	176	13	16	238	43	33	105	14
Total Analysis Volume [veh/h]	93	584	144	62	702	53	65	953	172	130	421	56
Pedestrian Volume [ped/h]	0			0			0			0		
Bicycle Volume [bicycles/h]	0			0			0			0		

Intersection Settings

Cycle Length [s]	100
Lost time [s]	10.00

Phasing & Timing

Control Type	Protecte	Permiss	Permiss	Protecte	Permiss	Permiss	Protecte	Permiss	Permiss	Protecte	Permiss	Permiss
Signal group	5	2	0	1	6	0	3	8	0	7	4	0
Auxiliary Signal Groups												
Lead / Lag	Lead	-	-	Lead	-	-	Lead	-	-	Lead	-	-

Movement, Approach, & Intersection Results

V/C, Movement V/C Ratio	0.06	0.18	0.09	0.04	0.22	0.03	0.04	0.30	0.11	0.08	0.13	0.04
Intersection LOS	C											
Intersection V/C	0.757											

Intersection Level Of Service Report
Intersection 24: Vincent Avenue (NS) at Puente Avenue (EW)

Control Type:	Signalized	Delay (sec / veh):	-
Analysis Method:	ICU 1	Level Of Service:	B
Analysis Period:	15 minutes	Volume to Capacity (v/c):	0.628

Intersection Setup

Name	Vincent Avenue			Vincent Avenue			Puente Avenue			Puente Avenue		
Approach	Northbound			Southbound			Eastbound			Westbound		
Lane Configuration												
Turning Movement	Left	Thru	Right	Left	Thru	Right	Left	Thru	Right	Left	Thru	Right
Lane Width [ft]	12.00	12.00	12.00	12.00	12.00	12.00	12.00	12.00	12.00	12.00	12.00	12.00
No. of Lanes in Pocket	1	0	0	1	0	0	0	0	0	0	0	0
Pocket Length [ft]	195.00	100.00	100.00	195.00	100.00	100.00	100.00	100.00	100.00	100.00	100.00	100.00
Speed [mph]	40.00			40.00			40.00			40.00		
Grade [%]	0.00			0.00			0.00			0.00		
Crosswalk	Yes			Yes			Yes			Yes		

Volumes

Name	Vincent Avenue			Vincent Avenue			Puente Avenue			Puente Avenue		
Base Volume Input [veh/h]	73	727	78	63	832	60	75	540	67	48	265	37
Base Volume Adjustment Factor	1.0000	1.0000	1.0000	1.0000	1.0000	1.0000	1.0000	1.0000	1.0000	1.0000	1.0000	1.0000
Heavy Vehicles Percentage [%]	2.00	2.00	2.00	2.00	2.00	2.00	2.00	2.00	2.00	2.00	2.00	2.00
Growth Rate	1.00	1.00	1.00	1.00	1.00	1.00	1.00	1.00	1.00	1.00	1.00	1.00
In-Process Volume [veh/h]	0	0	0	0	0	0	0	0	0	0	0	0
Site-Generated Trips [veh/h]	0	0	0	0	0	0	0	0	0	0	0	0
Diverted Trips [veh/h]	0	0	0	0	0	0	0	0	0	0	0	0
Pass-by Trips [veh/h]	0	0	0	0	0	0	0	0	0	0	0	0
Existing Site Adjustment Volume [veh/h]	0	0	0	0	0	0	0	0	0	0	0	0
Other Volume [veh/h]	0	0	0	0	0	0	0	0	0	0	0	0
Total Hourly Volume [veh/h]	73	727	78	63	832	60	75	540	67	48	265	37
Peak Hour Factor	1.0000	1.0000	1.0000	1.0000	1.0000	1.0000	1.0000	1.0000	1.0000	1.0000	1.0000	1.0000
Other Adjustment Factor	1.0000	1.0000	1.0000	1.0000	1.0000	1.0000	1.0000	1.0000	1.0000	1.0000	1.0000	1.0000
Total 15-Minute Volume [veh/h]	18	182	20	16	208	15	19	135	17	12	66	9
Total Analysis Volume [veh/h]	73	727	78	63	832	60	75	540	67	48	265	37
Pedestrian Volume [ped/h]	0			0			0			0		
Bicycle Volume [bicycles/h]	0			0			0			0		

Intersection Settings

Cycle Length [s]	100
Lost time [s]	10.00

Phasing & Timing

Control Type	Permiss	Permiss	Permiss	Permiss	Permiss	Permiss	Permiss	Permiss	Permiss	Permiss	Permiss	Permiss
Signal group	0	2	0	0	6	0	0	8	0	0	4	0
Auxiliary Signal Groups												
Lead / Lag	-	-	-	-	-	-	-	-	-	-	-	-

Movement, Approach, & Intersection Results

V/C, Movement V/C Ratio	0.05	0.23	0.05	0.04	0.26	0.04	0.05	0.19	0.04	0.03	0.10	0.02
Intersection LOS	B											
Intersection V/C	0.628											

Intersection Level Of Service Report
Intersection 25: Vincent Avenue (NS) at Rowland Avenue (EW)

Control Type:	Signalized	Delay (sec / veh):	-
Analysis Method:	ICU 1	Level Of Service:	B
Analysis Period:	15 minutes	Volume to Capacity (v/c):	0.604

Intersection Setup

Name	Vincent Avenue			Vincent Avenue			Rowland Avenue			Rowland Avenue		
Approach	Northbound			Southbound			Eastbound			Westbound		
Lane Configuration												
Turning Movement	Left	Thru	Right	Left	Thru	Right	Left	Thru	Right	Left	Thru	Right
Lane Width [ft]	12.00	12.00	12.00	12.00	12.00	12.00	12.00	12.00	12.00	12.00	12.00	12.00
No. of Lanes in Pocket	1	0	0	1	0	0	0	0	0	0	0	0
Pocket Length [ft]	145.00	100.00	100.00	125.00	100.00	100.00	100.00	100.00	100.00	100.00	100.00	100.00
Speed [mph]	35.00			40.00			35.00			35.00		
Grade [%]	0.00			0.00			0.00			0.00		
Crosswalk	Yes			Yes			Yes			Yes		

Volumes

Name	Vincent Avenue			Vincent Avenue			Rowland Avenue			Rowland Avenue		
Base Volume Input [veh/h]	33	840	113	98	849	18	14	206	49	69	93	31
Base Volume Adjustment Factor	1.0000	1.0000	1.0000	1.0000	1.0000	1.0000	1.0000	1.0000	1.0000	1.0000	1.0000	1.0000
Heavy Vehicles Percentage [%]	2.00	2.00	2.00	2.00	2.00	2.00	2.00	2.00	2.00	2.00	2.00	2.00
Growth Rate	1.00	1.00	1.00	1.00	1.00	1.00	1.00	1.00	1.00	1.00	1.00	1.00
In-Process Volume [veh/h]	0	0	0	0	0	0	0	0	0	0	0	0
Site-Generated Trips [veh/h]	0	0	0	0	0	0	0	0	0	0	0	0
Diverted Trips [veh/h]	0	0	0	0	0	0	0	0	0	0	0	0
Pass-by Trips [veh/h]	0	0	0	0	0	0	0	0	0	0	0	0
Existing Site Adjustment Volume [veh/h]	0	0	0	0	0	0	0	0	0	0	0	0
Other Volume [veh/h]	0	0	0	0	0	0	0	0	0	0	0	0
Total Hourly Volume [veh/h]	33	840	113	98	849	18	14	206	49	69	93	31
Peak Hour Factor	1.0000	1.0000	1.0000	1.0000	1.0000	1.0000	1.0000	1.0000	1.0000	1.0000	1.0000	1.0000
Other Adjustment Factor	1.0000	1.0000	1.0000	1.0000	1.0000	1.0000	1.0000	1.0000	1.0000	1.0000	1.0000	1.0000
Total 15-Minute Volume [veh/h]	8	210	28	25	212	5	4	52	12	17	23	8
Total Analysis Volume [veh/h]	33	840	113	98	849	18	14	206	49	69	93	31
Pedestrian Volume [ped/h]	0			0			0			0		
Bicycle Volume [bicycles/h]	0			0			0			0		

Intersection Settings

Cycle Length [s]	100
Lost time [s]	10.00

Phasing & Timing

Control Type	Protecte	Permiss	Permiss	Protecte	Permiss	Permiss	Permiss	Permiss	Permiss	Permiss	Permiss	Permiss
Signal group	5	2	0	1	6	0	0	8	0	0	4	0
Auxiliary Signal Groups												
Lead / Lag	Lead	-	-	Lead	-	-	-	-	-	-	-	-

Movement, Approach, & Intersection Results

V/C, Movement V/C Ratio	0.02	0.26	0.07	0.06	0.27	0.01	0.01	0.14	0.03	0.04	0.10	0.02
Intersection LOS	B											
Intersection V/C	0.604											

Intersection Level Of Service Report
Intersection 26: Vincent Avenue (NS) at Workman Avenue (EW)

Control Type:	Signalized	Delay (sec / veh):	-
Analysis Method:	ICU 1	Level Of Service:	B
Analysis Period:	15 minutes	Volume to Capacity (v/c):	0.685

Intersection Setup

Name	Vincent Avenue			Vincent Avenue			Workman Avenue			Workman Avenue		
Approach	Northbound			Southbound			Eastbound			Westbound		
Lane Configuration												
Turning Movement	Left	Thru	Right	Left	Thru	Right	Left	Thru	Right	Left	Thru	Right
Lane Width [ft]	12.00	12.00	12.00	12.00	12.00	12.00	12.00	12.00	12.00	12.00	12.00	12.00
No. of Lanes in Pocket	1	0	0	1	0	0	0	0	0	0	0	0
Pocket Length [ft]	120.00	100.00	100.00	180.00	100.00	100.00	100.00	100.00	100.00	100.00	100.00	100.00
Speed [mph]	35.00			40.00			35.00			35.00		
Grade [%]	0.00			0.00			0.00			0.00		
Crosswalk	Yes			Yes			Yes			Yes		

Volumes

Name	Vincent Avenue			Vincent Avenue			Workman Avenue			Workman Avenue		
Base Volume Input [veh/h]	91	947	198	81	856	24	17	257	64	108	143	47
Base Volume Adjustment Factor	1.0000	1.0000	1.0000	1.0000	1.0000	1.0000	1.0000	1.0000	1.0000	1.0000	1.0000	1.0000
Heavy Vehicles Percentage [%]	2.00	2.00	2.00	2.00	2.00	2.00	2.00	2.00	2.00	2.00	2.00	2.00
Growth Rate	1.00	1.00	1.00	1.00	1.00	1.00	1.00	1.00	1.00	1.00	1.00	1.00
In-Process Volume [veh/h]	0	0	0	0	0	0	0	0	0	0	0	0
Site-Generated Trips [veh/h]	0	0	0	0	0	0	0	0	0	0	0	0
Diverted Trips [veh/h]	0	0	0	0	0	0	0	0	0	0	0	0
Pass-by Trips [veh/h]	0	0	0	0	0	0	0	0	0	0	0	0
Existing Site Adjustment Volume [veh/h]	0	0	0	0	0	0	0	0	0	0	0	0
Other Volume [veh/h]	0	0	0	0	0	0	0	0	0	0	0	0
Total Hourly Volume [veh/h]	91	947	198	81	856	24	17	257	64	108	143	47
Peak Hour Factor	1.0000	1.0000	1.0000	1.0000	1.0000	1.0000	1.0000	1.0000	1.0000	1.0000	1.0000	1.0000
Other Adjustment Factor	1.0000	1.0000	1.0000	1.0000	1.0000	1.0000	1.0000	1.0000	1.0000	1.0000	1.0000	1.0000
Total 15-Minute Volume [veh/h]	23	237	50	20	214	6	4	64	16	27	36	12
Total Analysis Volume [veh/h]	91	947	198	81	856	24	17	257	64	108	143	47
Pedestrian Volume [ped/h]	0			0			0			0		
Bicycle Volume [bicycles/h]	0			0			0			0		

Intersection Settings

Cycle Length [s]	100
Lost time [s]	10.00

Phasing & Timing

Control Type	Protecte	Permiss	Permiss	Protecte	Permiss	Permiss	Permiss	Permiss	Permiss	Permiss	Permiss	Permiss
Signal group	5	2	0	1	6	0	0	8	0	0	4	0
Auxiliary Signal Groups												
Lead / Lag	Lead	-	-	Lead	-	-	-	-	-	-	-	-

Movement, Approach, & Intersection Results

V/C, Movement V/C Ratio	0.06	0.30	0.12	0.05	0.27	0.02	0.01	0.17	0.04	0.07	0.16	0.03
Intersection LOS	B											
Intersection V/C	0.685											

Intersection Level Of Service Report
Intersection 27: Vincent Avenue (NS) at I-10 WB Ramps (EW)

Control Type:	Signalized	Delay (sec / veh):	-
Analysis Method:	ICU 1	Level Of Service:	A
Analysis Period:	15 minutes	Volume to Capacity (v/c):	0.447

Intersection Setup

Name	Vincent Avenue		Vincent Avenue		I-10 WB Ramps	
Approach	Northbound		Southbound		Westbound	
Lane Configuration						
Turning Movement	Thru	Right	Left	Thru	Left	Right
Lane Width [ft]	12.00	12.00	12.00	12.00	12.00	12.00
No. of Lanes in Pocket	0	0	0	0	0	1
Pocket Length [ft]	100.00	100.00	100.00	100.00	100.00	220.00
Speed [mph]	35.00		35.00		35.00	
Grade [%]	0.00		0.00		0.00	
Crosswalk	No		No		Yes	

Volumes

Name	Vincent Avenue		Vincent Avenue		I-10 WB Ramps	
Base Volume Input [veh/h]	1060	0	0	1075	393	194
Base Volume Adjustment Factor	1.0000	1.0000	1.0000	1.0000	1.0000	1.0000
Heavy Vehicles Percentage [%]	2.00	2.00	2.00	2.00	2.00	2.00
Growth Rate	1.00	1.00	1.00	1.00	1.00	1.00
In-Process Volume [veh/h]	0	0	0	0	0	0
Site-Generated Trips [veh/h]	0	0	0	0	0	0
Diverted Trips [veh/h]	0	0	0	0	0	0
Pass-by Trips [veh/h]	0	0	0	0	0	0
Existing Site Adjustment Volume [veh/h]	0	0	0	0	0	0
Other Volume [veh/h]	0	0	0	0	0	0
Total Hourly Volume [veh/h]	1060	0	0	1075	393	194
Peak Hour Factor	1.0000	1.0000	1.0000	1.0000	1.0000	1.0000
Other Adjustment Factor	1.0000	1.0000	1.0000	1.0000	1.0000	1.0000
Total 15-Minute Volume [veh/h]	265	0	0	269	98	49
Total Analysis Volume [veh/h]	1060	0	0	1075	393	194
Pedestrian Volume [ped/h]	0		0		0	
Bicycle Volume [bicycles/h]	0		0		0	

Intersection Settings

Cycle Length [s]	100
Lost time [s]	10.00

Phasing & Timing

Control Type	Permissive	Permissive	Permissive	Permissive	Split	Split
Signal group	2	0	0	6	7	0
Auxiliary Signal Groups						
Lead / Lag	-	-	-	-	Lead	-

Movement, Approach, & Intersection Results

V/C, Movement V/C Ratio	0.22	0.00	0.00	0.22	0.12	0.12
Intersection LOS	A					
Intersection V/C	0.447					

Intersection Level Of Service Report
Intersection 28: Vincent Avenue (NS) at I-10 EB Ramps (EW)

Control Type:	Signalized	Delay (sec / veh):	-
Analysis Method:	ICU 1	Level Of Service:	A
Analysis Period:	15 minutes	Volume to Capacity (v/c):	0.536

Intersection Setup

Name	Vincent Avenue			Vincent Avenue			I-10 EB Ramps			I-10 EB Ramps		
Approach	Northbound			Southbound			Eastbound			Westbound		
Lane Configuration												
Turning Movement	Left	Thru	Right	Left	Thru	Right	Left	Thru	Right	Left	Thru	Right
Lane Width [ft]	12.00	12.00	12.00	12.00	12.00	12.00	12.00	12.00	12.00	12.00	12.00	12.00
No. of Lanes in Pocket	0	0	0	0	0	0	0	0	0	0	0	0
Pocket Length [ft]	100.00	100.00	100.00	100.00	100.00	100.00	100.00	100.00	100.00	100.00	100.00	100.00
Speed [mph]	35.00			35.00			35.00			35.00		
Grade [%]	0.00			0.00			0.00			0.00		
Crosswalk	No			No			Yes			Yes		

Volumes

Name	Vincent Avenue			Vincent Avenue			I-10 EB Ramps			I-10 EB Ramps		
Base Volume Input [veh/h]	0	903	711	0	1381	340	160	0	129	0	0	0
Base Volume Adjustment Factor	1.0000	1.0000	1.0000	1.0000	1.0000	1.0000	1.0000	1.0000	1.0000	1.0000	1.0000	1.0000
Heavy Vehicles Percentage [%]	2.00	2.00	2.00	2.00	2.00	2.00	2.00	2.00	2.00	2.00	2.00	2.00
Growth Rate	1.00	1.00	1.00	1.00	1.00	1.00	1.00	1.00	1.00	1.00	1.00	1.00
In-Process Volume [veh/h]	0	0	0	0	0	0	0	0	0	0	0	0
Site-Generated Trips [veh/h]	0	0	0	0	0	0	0	0	0	0	0	0
Diverted Trips [veh/h]	0	0	0	0	0	0	0	0	0	0	0	0
Pass-by Trips [veh/h]	0	0	0	0	0	0	0	0	0	0	0	0
Existing Site Adjustment Volume [veh/h]	0	0	0	0	0	0	0	0	0	0	0	0
Other Volume [veh/h]	0	0	0	0	0	0	0	0	0	0	0	0
Total Hourly Volume [veh/h]	0	903	711	0	1381	340	160	0	129	0	0	0
Peak Hour Factor	1.0000	1.0000	1.0000	1.0000	1.0000	1.0000	1.0000	1.0000	1.0000	1.0000	1.0000	1.0000
Other Adjustment Factor	1.0000	1.0000	1.0000	1.0000	1.0000	1.0000	1.0000	1.0000	1.0000	1.0000	1.0000	1.0000
Total 15-Minute Volume [veh/h]	0	226	178	0	345	85	40	0	32	0	0	0
Total Analysis Volume [veh/h]	0	903	711	0	1381	340	160	0	129	0	0	0
Pedestrian Volume [ped/h]	0			0			0			0		
Bicycle Volume [bicycles/h]	0			0			0			0		

Intersection Settings

Cycle Length [s]	100
Lost time [s]	10.00

Phasing & Timing

Control Type	Permiss	Permiss	Permiss	Permiss	Permiss	Permiss	Split	Permiss	Split	Permiss	Permiss	Permiss
Signal group	0	2	0	0	6	0	3	0	0	0	0	0
Auxiliary Signal Groups												
Lead / Lag	-	-	-	-	-	-	Lead	-	-	-	-	-

Movement, Approach, & Intersection Results

V/C, Movement V/C Ratio	0.00	0.34	0.34	0.00	0.29	0.21	0.10	0.00	0.04	0.00	0.00	0.00
Intersection LOS	A											
Intersection V/C	0.536											

Intersection Level Of Service Report

Intersection 29: Vernon Ave/Lark Ellen Ave (NS) at Gladstone Street (EW)

Control Type:	Signalized	Delay (sec / veh):	-
Analysis Method:	ICU 1	Level Of Service:	C
Analysis Period:	15 minutes	Volume to Capacity (v/c):	0.726

Intersection Setup

Name	Lark Ellen Avenue			Vernon Avenue			Gladstone Street			Gladstone Street		
Approach	Northbound			Southbound			Eastbound			Westbound		
Lane Configuration												
Turning Movement	Left	Thru	Right	Left	Thru	Right	Left	Thru	Right	Left	Thru	Right
Lane Width [ft]	12.00	12.00	12.00	12.00	12.00	12.00	12.00	12.00	12.00	12.00	12.00	12.00
No. of Lanes in Pocket	1	0	0	1	0	0	1	0	0	1	0	0
Pocket Length [ft]	60.00	100.00	100.00	60.00	100.00	100.00	70.00	100.00	100.00	60.00	100.00	100.00
Speed [mph]	35.00			35.00			45.00			45.00		
Grade [%]	0.00			0.00			0.00			0.00		
Crosswalk	Yes			Yes			Yes			Yes		

Volumes

Name	Lark Ellen Avenue			Vernon Avenue			Gladstone Street			Gladstone Street		
Base Volume Input [veh/h]	41	335	161	42	424	62	167	992	74	92	238	29
Base Volume Adjustment Factor	1.0000	1.0000	1.0000	1.0000	1.0000	1.0000	1.0000	1.0000	1.0000	1.0000	1.0000	1.0000
Heavy Vehicles Percentage [%]	2.00	2.00	2.00	2.00	2.00	2.00	2.00	2.00	2.00	2.00	2.00	2.00
Growth Rate	1.00	1.00	1.00	1.00	1.00	1.00	1.00	1.00	1.00	1.00	1.00	1.00
In-Process Volume [veh/h]	0	0	0	0	0	0	0	0	0	0	0	0
Site-Generated Trips [veh/h]	0	0	0	0	0	0	0	0	0	0	0	0
Diverted Trips [veh/h]	0	0	0	0	0	0	0	0	0	0	0	0
Pass-by Trips [veh/h]	0	0	0	0	0	0	0	0	0	0	0	0
Existing Site Adjustment Volume [veh/h]	0	0	0	0	0	0	0	0	0	0	0	0
Other Volume [veh/h]	0	0	0	0	0	0	0	0	0	0	0	0
Total Hourly Volume [veh/h]	41	335	161	42	424	62	167	992	74	92	238	29
Peak Hour Factor	1.0000	1.0000	1.0000	1.0000	1.0000	1.0000	1.0000	1.0000	1.0000	1.0000	1.0000	1.0000
Other Adjustment Factor	1.0000	1.0000	1.0000	1.0000	1.0000	1.0000	1.0000	1.0000	1.0000	1.0000	1.0000	1.0000
Total 15-Minute Volume [veh/h]	10	84	40	11	106	16	42	248	19	23	60	7
Total Analysis Volume [veh/h]	41	335	161	42	424	62	167	992	74	92	238	29
Pedestrian Volume [ped/h]	0			0			0			0		
Bicycle Volume [bicycles/h]	0			0			0			0		

Intersection Settings

Cycle Length [s]	100
Lost time [s]	10.00

Phasing & Timing

Control Type	Permiss	Permiss	Permiss	Permiss	Permiss	Permiss	Permiss	Permiss	Permiss	Permiss	Permiss	Permiss
Signal group	0	2	0	0	6	0	0	8	0	0	4	0
Auxiliary Signal Groups												
Lead / Lag	-	-	-	-	-	-	-	-	-	-	-	-

Movement, Approach, & Intersection Results

V/C, Movement V/C Ratio	0.03	0.21	0.10	0.03	0.15	0.15	0.10	0.33	0.33	0.06	0.08	0.08
Intersection LOS	C											
Intersection V/C	0.726											

Intersection Level Of Service Report
Intersection 30: Azusa Avenue (NS) at I-210 EB Ramps (EW)

Control Type:	Signalized	Delay (sec / veh):	-
Analysis Method:	ICU 1	Level Of Service:	B
Analysis Period:	15 minutes	Volume to Capacity (v/c):	0.654

Intersection Setup

Name	Azusa Avenue		Azusa Avenue		I-210 EB Ramps	
Approach	Northbound		Southbound		Eastbound	
Lane Configuration						
Turning Movement	Left	Thru	Thru	Right	Left	Right
Lane Width [ft]	12.00	12.00	12.00	12.00	12.00	12.00
No. of Lanes in Pocket	0	0	0	0	0	0
Pocket Length [ft]	100.00	100.00	100.00	100.00	100.00	100.00
Speed [mph]	35.00		35.00		35.00	
Grade [%]	0.00		0.00		0.00	
Crosswalk	No		No		Yes	

Volumes

Name	Azusa Avenue		Azusa Avenue		I-210 EB Ramps	
Base Volume Input [veh/h]	0	1131	795	0	131	321
Base Volume Adjustment Factor	1.0000	1.0000	1.0000	1.0000	1.0000	1.0000
Heavy Vehicles Percentage [%]	2.00	2.00	2.00	2.00	2.00	2.00
Growth Rate	1.00	1.00	1.00	1.00	1.00	1.00
In-Process Volume [veh/h]	0	0	0	0	0	0
Site-Generated Trips [veh/h]	0	0	0	0	0	0
Diverted Trips [veh/h]	0	0	0	0	0	0
Pass-by Trips [veh/h]	0	0	0	0	0	0
Existing Site Adjustment Volume [veh/h]	0	0	0	0	0	0
Other Volume [veh/h]	0	0	0	0	0	0
Total Hourly Volume [veh/h]	0	1131	795	0	131	321
Peak Hour Factor	1.0000	1.0000	1.0000	1.0000	1.0000	1.0000
Other Adjustment Factor	1.0000	1.0000	1.0000	1.0000	1.0000	1.0000
Total 15-Minute Volume [veh/h]	0	283	199	0	33	80
Total Analysis Volume [veh/h]	0	1131	795	0	131	321
Pedestrian Volume [ped/h]	0		0		0	
Bicycle Volume [bicycles/h]	0		0		0	

Intersection Settings

Cycle Length [s]	100
Lost time [s]	10.00

Phasing & Timing

Control Type	Permissive	Permissive	Permissive	Permissive	Split	Split
Signal group	0	2	6	0	3	0
Auxiliary Signal Groups						
Lead / Lag	-	-	-	-	Lead	-

Movement, Approach, & Intersection Results

V/C, Movement V/C Ratio	0.00	0.35	0.25	0.00	0.04	0.20
Intersection LOS	B					
Intersection V/C	0.654					

Intersection Level Of Service Report
Intersection 31: Azusa Avenue (NS) at Paramount Street (EW)

Control Type:	Signalized	Delay (sec / veh):	-
Analysis Method:	ICU 1	Level Of Service:	B
Analysis Period:	15 minutes	Volume to Capacity (v/c):	0.631

Intersection Setup

Name	Azusa Avenue			Azusa Avenue			Paramount Street			Paramount Street		
Approach	Northbound			Southbound			Eastbound			Westbound		
Lane Configuration												
Turning Movement	Left	Thru	Right	Left	Thru	Right	Left	Thru	Right	Left	Thru	Right
Lane Width [ft]	12.00	12.00	12.00	12.00	12.00	12.00	12.00	12.00	12.00	12.00	12.00	12.00
No. of Lanes in Pocket	1	0	0	1	0	0	0	0	0	0	0	0
Pocket Length [ft]	200.00	100.00	100.00	110.00	100.00	100.00	100.00	100.00	100.00	100.00	100.00	100.00
Speed [mph]	35.00			35.00			25.00			15.00		
Grade [%]	0.00			0.00			0.00			0.00		
Crosswalk	No			Yes			Yes			Yes		

Volumes

Name	Azusa Avenue			Azusa Avenue			Paramount Street			Paramount Street		
Base Volume Input [veh/h]	91	923	4	27	966	51	170	1	87	17	7	36
Base Volume Adjustment Factor	1.0000	1.0000	1.0000	1.0000	1.0000	1.0000	1.0000	1.0000	1.0000	1.0000	1.0000	1.0000
Heavy Vehicles Percentage [%]	2.00	2.00	2.00	2.00	2.00	2.00	2.00	2.00	2.00	2.00	2.00	2.00
Growth Rate	1.00	1.00	1.00	1.00	1.00	1.00	1.00	1.00	1.00	1.00	1.00	1.00
In-Process Volume [veh/h]	0	0	0	0	0	0	0	0	0	0	0	0
Site-Generated Trips [veh/h]	0	0	0	0	0	0	0	0	0	0	0	0
Diverted Trips [veh/h]	0	0	0	0	0	0	0	0	0	0	0	0
Pass-by Trips [veh/h]	0	0	0	0	0	0	0	0	0	0	0	0
Existing Site Adjustment Volume [veh/h]	0	0	0	0	0	0	0	0	0	0	0	0
Other Volume [veh/h]	0	0	0	0	0	0	0	0	0	0	0	0
Total Hourly Volume [veh/h]	91	923	4	27	966	51	170	1	87	17	7	36
Peak Hour Factor	1.0000	1.0000	1.0000	1.0000	1.0000	1.0000	1.0000	1.0000	1.0000	1.0000	1.0000	1.0000
Other Adjustment Factor	1.0000	1.0000	1.0000	1.0000	1.0000	1.0000	1.0000	1.0000	1.0000	1.0000	1.0000	1.0000
Total 15-Minute Volume [veh/h]	23	231	1	7	242	13	43	0	22	4	2	9
Total Analysis Volume [veh/h]	91	923	4	27	966	51	170	1	87	17	7	36
Pedestrian Volume [ped/h]	0			0			0			0		
Bicycle Volume [bicycles/h]	0			0			0			0		

Intersection Settings

Cycle Length [s]	100
Lost time [s]	10.00

Phasing & Timing

Control Type	Permiss	Permiss	Permiss	Permiss	Permiss	Permiss	Permiss	Permiss	Permiss	Permiss	Permiss	Permiss
Signal group	0	2	0	0	6	0	0	8	0	0	4	0
Auxiliary Signal Groups												
Lead / Lag	-	-	-	-	-	-	-	-	-	-	-	-

Movement, Approach, & Intersection Results

V/C, Movement V/C Ratio	0.06	0.29	0.00	0.02	0.30	0.03	0.11	0.16	0.16	0.01	0.04	0.04
Intersection LOS	B											
Intersection V/C	0.631											

Intersection Level Of Service Report
Intersection 32: Azusa Avenue (NS) at Gladstone Street (EW)

Control Type:	Signalized	Delay (sec / veh):	-
Analysis Method:	ICU 1	Level Of Service:	C
Analysis Period:	15 minutes	Volume to Capacity (v/c):	0.730

Intersection Setup

Name	Azusa Avenue			Azusa Avenue			Gladstone Street			Gladstone Street		
Approach	Northbound			Southbound			Eastbound			Westbound		
Lane Configuration												
Turning Movement	Left	Thru	Right	Left	Thru	Right	Left	Thru	Right	Left	Thru	Right
Lane Width [ft]	12.00	12.00	12.00	12.00	12.00	12.00	12.00	12.00	12.00	12.00	12.00	12.00
No. of Lanes in Pocket	1	0	1	2	0	0	1	0	0	1	0	0
Pocket Length [ft]	190.00	100.00	190.00	190.00	100.00	100.00	150.00	100.00	100.00	150.00	100.00	100.00
Speed [mph]	35.00			35.00			40.00			40.00		
Grade [%]	0.00			0.00			0.00			0.00		
Crosswalk	Yes			Yes			Yes			Yes		

Volumes

Name	Azusa Avenue			Azusa Avenue			Gladstone Street			Gladstone Street		
Base Volume Input [veh/h]	79	668	150	214	716	57	212	762	79	122	287	73
Base Volume Adjustment Factor	1.0000	1.0000	1.0000	1.0000	1.0000	1.0000	1.0000	1.0000	1.0000	1.0000	1.0000	1.0000
Heavy Vehicles Percentage [%]	2.00	2.00	2.00	2.00	2.00	2.00	2.00	2.00	2.00	2.00	2.00	2.00
Growth Rate	1.00	1.00	1.00	1.00	1.00	1.00	1.00	1.00	1.00	1.00	1.00	1.00
In-Process Volume [veh/h]	0	0	0	0	0	0	0	0	0	0	0	0
Site-Generated Trips [veh/h]	0	0	0	0	0	0	0	0	0	0	0	0
Diverted Trips [veh/h]	0	0	0	0	0	0	0	0	0	0	0	0
Pass-by Trips [veh/h]	0	0	0	0	0	0	0	0	0	0	0	0
Existing Site Adjustment Volume [veh/h]	0	0	0	0	0	0	0	0	0	0	0	0
Other Volume [veh/h]	0	0	0	0	0	0	0	0	0	0	0	0
Total Hourly Volume [veh/h]	79	668	150	214	716	57	212	762	79	122	287	73
Peak Hour Factor	1.0000	1.0000	1.0000	1.0000	1.0000	1.0000	1.0000	1.0000	1.0000	1.0000	1.0000	1.0000
Other Adjustment Factor	1.0000	1.0000	1.0000	1.0000	1.0000	1.0000	1.0000	1.0000	1.0000	1.0000	1.0000	1.0000
Total 15-Minute Volume [veh/h]	20	167	38	54	179	14	53	191	20	31	72	18
Total Analysis Volume [veh/h]	79	668	150	214	716	57	212	762	79	122	287	73
Pedestrian Volume [ped/h]	0			0			0			0		
Bicycle Volume [bicycles/h]	0			0			0			0		

Intersection Settings

Cycle Length [s]	100
Lost time [s]	10.00

Phasing & Timing

Control Type	Protecte	Permiss	Overlap	Protecte	Permiss	Permiss	Protecte	Permiss	Permiss	Protecte	Permiss	Permiss
Signal group	5	2	2	1	6	0	3	8	0	7	4	0
Auxiliary Signal Groups			2,7									
Lead / Lag	Lead	-	-	Lead	-	-	Lead	-	-	Lead	-	-

Movement, Approach, & Intersection Results

V/C, Movement V/C Ratio	0.05	0.21	0.02	0.07	0.24	0.24	0.13	0.26	0.26	0.08	0.11	0.11
Intersection LOS	C											
Intersection V/C	0.730											

Intersection Level Of Service Report
Intersection 33: San Gabriel Ave/Azusa Ave (NS) at 1st St (EW)

Control Type:	Signalized	Delay (sec / veh):	-
Analysis Method:	ICU 1	Level Of Service:	B
Analysis Period:	15 minutes	Volume to Capacity (v/c):	0.658

Intersection Setup

Name												
Approach	Northbound			Southbound			Eastbound			Westbound		
Lane Configuration												
Turning Movement	Left	Thru	Right	Left	Thru	Right	Left	Thru	Right	Left	Thru	Right
Lane Width [ft]	12.00	12.00	12.00	12.00	12.00	12.00	12.00	12.00	12.00	12.00	12.00	12.00
No. of Lanes in Pocket	0	0	0	0	0	0	0	0	0	0	0	0
Pocket Length [ft]	100.00	100.00	100.00	100.00	100.00	100.00	100.00	100.00	100.00	100.00	100.00	100.00
Speed [mph]	35.00			35.00			35.00			35.00		
Grade [%]	0.00			0.00			0.00			0.00		
Crosswalk	No			Yes			Yes			Yes		

Volumes

Name												
Base Volume Input [veh/h]	78	505	330	117	837	20	72	175	85	288	164	148
Base Volume Adjustment Factor	1.0000	1.0000	1.0000	1.0000	1.0000	1.0000	1.0000	1.0000	1.0000	1.0000	1.0000	1.0000
Heavy Vehicles Percentage [%]	2.00	2.00	2.00	2.00	2.00	2.00	2.00	2.00	2.00	2.00	2.00	2.00
Growth Rate	1.04	1.04	1.04	1.04	1.04	1.04	1.04	1.04	1.04	1.04	1.04	1.04
In-Process Volume [veh/h]	0	0	0	0	0	0	0	0	0	0	0	0
Site-Generated Trips [veh/h]	0	0	0	0	0	0	0	0	0	0	0	0
Diverted Trips [veh/h]	0	0	0	0	0	0	0	0	0	0	0	0
Pass-by Trips [veh/h]	0	0	0	0	0	0	0	0	0	0	0	0
Existing Site Adjustment Volume [veh/h]	0	0	0	0	0	0	0	0	0	0	0	0
Other Volume [veh/h]	0	0	0	0	0	0	0	0	0	0	0	0
Total Hourly Volume [veh/h]	81	525	343	122	870	21	75	182	88	300	171	154
Peak Hour Factor	0.9690	0.9690	0.9690	0.9690	0.9690	0.9690	0.9690	0.9690	0.9690	0.9690	0.9690	0.9690
Other Adjustment Factor	1.0000	1.0000	1.0000	1.0000	1.0000	1.0000	1.0000	1.0000	1.0000	1.0000	1.0000	1.0000
Total 15-Minute Volume [veh/h]	21	135	88	31	224	5	19	47	23	77	44	40
Total Analysis Volume [veh/h]	84	542	354	126	898	22	77	188	91	310	176	159
Pedestrian Volume [ped/h]	0			0			0			0		
Bicycle Volume [bicycles/h]	0			0			0			0		

Intersection Settings

Cycle Length [s]	100
Lost time [s]	10.00

Phasing & Timing

Control Type	Protecte	Permiss	Permiss	Protecte	Permiss	Permiss	Protecte	Permiss	Permiss	Protecte	Permiss	Permiss
Signal group	5	2	0	1	6	0	3	8	0	7	4	0
Auxiliary Signal Groups												
Lead / Lag	Lead	-	-	Lead	-	-	Lead	-	-	Lead	-	-

Movement, Approach, & Intersection Results

V/C, Movement V/C Ratio	0.05	0.17	0.22	0.08	0.28	0.01	0.05	0.12	0.06	0.10	0.10	0.10
Intersection LOS	B											
Intersection V/C	0.658											

Intersection Level Of Service Report
Intersection 34: Alameda Ave/I-210 WB Ramps (NS) at 1st St (EW)

Control Type:	Signalized	Delay (sec / veh):	-
Analysis Method:	ICU 1	Level Of Service:	B
Analysis Period:	15 minutes	Volume to Capacity (v/c):	0.687

Intersection Setup

Name												
Approach	Northbound			Southbound			Eastbound			Westbound		
Lane Configuration												
Turning Movement	Left	Thru	Right	Left	Thru	Right	Left	Thru	Right	Left	Thru	Right
Lane Width [ft]	12.00	12.00	12.00	12.00	12.00	12.00	12.00	12.00	12.00	12.00	12.00	12.00
No. of Lanes in Pocket	1	0	0	1	0	1	1	0	1	1	0	1
Pocket Length [ft]	365.00	100.00	100.00	50.00	100.00	250.00	50.00	100.00	100.00	100.00	100.00	100.00
Speed [mph]	35.00			35.00			35.00			35.00		
Grade [%]	0.00			0.00			0.00			0.00		
Crosswalk	Yes			Yes			Yes			Yes		

Volumes

Name												
Base Volume Input [veh/h]	366	87	94	46	24	38	20	604	207	177	305	43
Base Volume Adjustment Factor	1.0000	1.0000	1.0000	1.0000	1.0000	1.0000	1.0000	1.0000	1.0000	1.0000	1.0000	1.0000
Heavy Vehicles Percentage [%]	2.00	2.00	2.00	2.00	2.00	2.00	2.00	2.00	2.00	2.00	2.00	2.00
Growth Rate	1.00	1.00	1.00	1.00	1.00	1.00	1.00	1.00	1.00	1.00	1.00	1.00
In-Process Volume [veh/h]	0	0	0	0	0	0	0	0	0	0	0	0
Site-Generated Trips [veh/h]	0	0	0	0	0	0	0	0	0	0	0	0
Diverted Trips [veh/h]	0	0	0	0	0	0	0	0	0	0	0	0
Pass-by Trips [veh/h]	0	0	0	0	0	0	0	0	0	0	0	0
Existing Site Adjustment Volume [veh/h]	0	0	0	0	0	0	0	0	0	0	0	0
Other Volume [veh/h]	0	0	0	0	0	0	0	0	0	0	0	0
Total Hourly Volume [veh/h]	366	87	94	46	24	38	20	604	207	177	305	43
Peak Hour Factor	0.9400	0.9400	0.9400	0.9400	0.9400	0.9400	0.9400	0.9400	0.9400	0.9400	0.9400	0.9400
Other Adjustment Factor	1.0000	1.0000	1.0000	1.0000	1.0000	1.0000	1.0000	1.0000	1.0000	1.0000	1.0000	1.0000
Total 15-Minute Volume [veh/h]	97	23	25	12	6	10	5	161	55	47	81	11
Total Analysis Volume [veh/h]	389	93	100	49	26	40	21	643	220	188	324	46
Pedestrian Volume [ped/h]	0			0			0			0		
Bicycle Volume [bicycles/h]	0			0			0			0		

Intersection Settings

Cycle Length [s]	100
Lost time [s]	10.00

Phasing & Timing

Control Type	Permiss	Permiss	Permiss	Permiss	Permiss	Permiss	Permiss	Permiss	Permiss	Permiss	Permiss	Permiss
Signal group	0	2	0	0	6	0	0	8	0	0	4	0
Auxiliary Signal Groups												
Lead / Lag	-	-	-	-	-	-	-	-	-	-	-	-

Movement, Approach, & Intersection Results

V/C, Movement V/C Ratio	0.24	0.12	0.12	0.03	0.02	0.03	0.01	0.20	0.14	0.12	0.20	0.03
Intersection LOS	B											
Intersection V/C	0.687											

EXISTING PLUS PROJECT

Vincent Avenue Industrial Building

Vistro File: G:\...\AM.vistro
Report File: G:\...\EP AM.pdf

Scenario 2 Existing Plus Project
5/4/2020

Intersection Analysis Summary

ID	Intersection Name	Control Type	Method	Worst Mvmt	V/C	Delay (s/veh)	LOS
1	I-605 SB On Ramp (NS) at Live Oak Avenue (EW)	Signalized	ICU 1	WB Thru	0.522	-	A
2	I-605 NB Ramps (NS) at Live Oak Avenue (EW)	Two-way stop	HCM 6th Edition	SB Right	0.987	70.8	F
3	Graham Road (NS) at Live Oak Avenue (EW)	Signalized	ICU 1	WB Thru	0.569	-	A
4	Rivergrade Road (NS) at Live Oak Avenue (EW)	Signalized	ICU 1	WB Thru	0.613	-	B
5	Stewart Avenue (NS) at Live Oak Avenue (EW)	Signalized	ICU 1	WB Thru	0.808	-	D
6	Baldwin Park Boulevard (NS) at Live Oak Avenue (EW)	Signalized	ICU 1	WB Thru	0.605	-	B
7	Arrow Highway (NS) at Live Oak Ave/Arrow Hwy (EW)	Signalized	ICU 1	WB Thru	0.632	-	B
8	Maine Avenue (NS) at Arrow Highway (EW)	Signalized	ICU 1	WB Thru	0.791	-	C
9	Santa Fe Dam/Azusa Canyon Road (NS) at Arrow Highway (EW)	Signalized	ICU 1	WB Thru	0.926	-	E
10	4th Street (NS) at Arrow Highway (EW)	Signalized	ICU 1	EB Thru	0.371	-	A
11	Irwindale Avenue (NS) at I-210 WB Ramps (EW)	Signalized	ICU 1	SB Thru	0.459	-	A
12	Irwindale Avenue (NS) at I-210 EB Ramps (EW)	Signalized	ICU 1	EB Right	0.681	-	B
13	Irwindale Avenue (NS) at Jardin De Roca/Irwindale Rd (EW)	Signalized	ICU 1	SB Thru	0.568	-	A
14	Irwindale Avenue (NS) at 1st Street (EW)	Signalized	ICU 1	NB Thru	0.505	-	A
15	Irwindale Avenue (NS) at Gladstone Street (EW)	Signalized	ICU 1	WB Left	0.666	-	B
16	Irwindale Avenue (NS) at Arrow Highway (EW)	Signalized	ICU 1	WB Thru	0.846	-	D
17	Vincent Avenue (NS) at	Signalized	ICU 1	WB Right	0.530		A

17	Gladstone Street (EW)	Signalized	ICU 1	WB Right	0.550	-	A
18	Vincent Avenue (NS) at Arrow Highway (EW)	Signalized	ICU 1	WB Thru	0.739	-	C
19	Vincent Avenue (NS) at Project North Driveway (EW)	Two-way stop	HCM 6th Edition	EB Left	0.060	14.6	B
20	Vincent Avenue (NS) at Project South Driveway (EW)	Two-way stop	HCM 6th Edition	EB Left	0.043	12.7	B
21	Vincent Avenue (NS) at Cypress Street (EW)	Signalized	ICU 1	WB Right	0.652	-	B
22	Vincent Avenue (NS) at San Bernardino Road (EW)	Signalized	ICU 1	WB Thru	0.653	-	B
23	Vincent Avenue (NS) at Badillo Street (EW)	Signalized	ICU 1	WB Thru	0.615	-	B
24	Vincent Avenue (NS) at Puente Avenue (EW)	Signalized	ICU 1	NB Thru	0.594	-	A
25	Vincent Avenue (NS) at Rowland Avenue (EW)	Signalized	ICU 1	SB Thru	0.542	-	A
26	Vincent Avenue (NS) at Workman Avenue (EW)	Signalized	ICU 1	SB Thru	0.612	-	B
27	Vincent Avenue (NS) at I-10 WB Ramps (EW)	Signalized	ICU 1	SB Thru	0.455	-	A
28	Vincent Avenue (NS) at I-10 EB Ramps (EW)	Signalized	ICU 1	NB Thru	0.492	-	A
29	Vernon Ave/Lark Ellen Ave (NS) at Gladstone Street (EW)	Signalized	ICU 1	WB Right	0.706	-	C
30	Azusa Avenue (NS) at I-210 EB Ramps (EW)	Signalized	ICU 1	NB Thru	0.662	-	B
31	Azusa Avenue (NS) at Paramount Street (EW)	Signalized	ICU 1	NB Thru	0.606	-	B
32	Azusa Avenue (NS) at Gladstone Street (EW)	Signalized	ICU 1	WB Thru	0.754	-	C
33	San Gabriel Ave/Azusa Ave (NS) at 1st St (EW)	Signalized	ICU 1	SB Thru	0.685	-	B
34	Alameda Ave/I-210 WB Ramps NS) at 1st St (EW)	Signalized	ICU 1	WB Left	0.936	-	E

V/C, Delay, LOS: For two-way stop, these values are taken from the movement with the worst (highest) delay value. For all other control types, they are taken for the whole intersection.

Intersection Level Of Service Report
Intersection 1: I-605 SB On Ramp (NS) at Live Oak Avenue (EW)

Control Type:	Signalized	Delay (sec / veh):	-
Analysis Method:	ICU 1	Level Of Service:	A
Analysis Period:	15 minutes	Volume to Capacity (v/c):	0.522

Intersection Setup

Name	I-605 SB On Ramps				Live Oak Avenue	
Approach	Northbound		Eastbound		Westbound	
Lane Configuration						
Turning Movement	Left	Right	Thru	Right	Left	Thru
Lane Width [ft]	12.00	12.00	12.00	12.00	12.00	12.00
No. of Lanes in Pocket	0	0	0	0	1	0
Pocket Length [ft]	100.00	100.00	100.00	100.00	365.00	100.00
Speed [mph]	35.00		35.00		45.00	
Grade [%]	0.00		0.00		0.00	
Crosswalk	Yes		No		No	

Volumes

Name	I-605 SB On Ramps				Live Oak Avenue	
Base Volume Input [veh/h]	0	0	280	347	521	1094
Base Volume Adjustment Factor	1.0000	1.0000	1.0000	0.0000	1.0000	1.0000
Heavy Vehicles Percentage [%]	2.00	2.00	2.00	2.00	2.00	2.00
Growth Rate	1.00	1.00	1.00	1.00	1.00	1.00
In-Process Volume [veh/h]	0	0	0	0	0	0
Site-Generated Trips [veh/h]	0	0	0	0	14	0
Diverted Trips [veh/h]	0	0	0	0	0	0
Pass-by Trips [veh/h]	0	0	0	0	0	0
Existing Site Adjustment Volume [veh/h]	0	0	0	0	0	0
Other Volume [veh/h]	0	0	0	0	0	0
Total Hourly Volume [veh/h]	0	0	280	0	535	1094
Peak Hour Factor	1.0000	1.0000	1.0000	1.0000	1.0000	1.0000
Other Adjustment Factor	1.0000	1.0000	1.0000	0.0000	1.0000	1.0000
Total 15-Minute Volume [veh/h]	0	0	70	0	134	274
Total Analysis Volume [veh/h]	0	0	280	0	535	1094
Pedestrian Volume [ped/h]	0		0		0	
Bicycle Volume [bicycles/h]	0		0		0	

Intersection Settings

Cycle Length [s]	100
Lost time [s]	10.00

Phasing & Timing

Control Type	Permissive	Permissive	Permissive	Permissive	Protected	Permissive
Signal group	0	0	2	0	1	6
Auxiliary Signal Groups						
Lead / Lag	-	-	-	-	Lead	-

Movement, Approach, & Intersection Results

V/C, Movement V/C Ratio	0.00	0.00	0.09	0.00	0.33	0.34
Intersection LOS	A					
Intersection V/C	0.522					

Intersection Level Of Service Report
Intersection 2: I-605 NB Ramps (NS) at Live Oak Avenue (EW)

Control Type:	Two-way stop	Delay (sec / veh):	70.8
Analysis Method:	HCM 6th Edition	Level Of Service:	F
Analysis Period:	15 minutes	Volume to Capacity (v/c):	0.987

Intersection Setup

Name	I-605 NB Ramps			I-605 NB Ramps			Live Oak Avenue			Live Oak Avenue		
Approach	Northbound			Southbound			Eastbound			Westbound		
Lane Configuration												
Turning Movement	Left	Thru	Right	Left	Thru	Right	Left	Thru	Right	Left	Thru	Right
Lane Width [ft]	12.00	12.00	12.00	12.00	12.00	12.00	12.00	12.00	12.00	12.00	12.00	12.00
No. of Lanes in Pocket	0	0	0	0	0	0	0	0	0	0	0	0
Pocket Length [ft]	100.00	100.00	100.00	100.00	100.00	100.00	100.00	100.00	100.00	100.00	100.00	100.00
Speed [mph]	35.00			35.00			45.00			45.00		
Grade [%]	0.00			0.00			0.00			0.00		
Crosswalk	Yes			Yes			No			No		

Volumes

Name	I-605 NB Ramps			I-605 NB Ramps			Live Oak Avenue			Live Oak Avenue		
Base Volume Input [veh/h]	0	0	469	0	0	432	0	262	0	0	1205	0
Base Volume Adjustment Factor	1.0000	1.0000	1.0000	1.0000	1.0000	1.0000	1.0000	1.0000	1.0000	1.0000	1.0000	1.0000
Heavy Vehicles Percentage [%]	2.00	2.00	2.00	2.00	2.00	2.00	2.00	2.00	2.00	2.00	2.00	2.00
Growth Rate	1.00	1.00	1.00	1.00	1.00	1.00	1.00	1.00	1.00	1.00	1.00	1.00
In-Process Volume [veh/h]	0	0	0	0	0	0	0	0	0	0	0	0
Site-Generated Trips [veh/h]	0	0	105	0	0	0	0	0	0	0	14	0
Diverted Trips [veh/h]	0	0	0	0	0	0	0	0	0	0	0	0
Pass-by Trips [veh/h]	0	0	0	0	0	0	0	0	0	0	0	0
Existing Site Adjustment Volume [veh/h]	0	0	0	0	0	0	0	0	0	0	0	0
Other Volume [veh/h]	0	0	0	0	0	0	0	0	0	0	0	0
Total Hourly Volume [veh/h]	0	0	574	0	0	432	0	262	0	0	1219	0
Peak Hour Factor	1.0000	1.0000	1.0000	1.0000	1.0000	1.0000	1.0000	1.0000	1.0000	1.0000	1.0000	1.0000
Other Adjustment Factor	1.0000	1.0000	1.0000	1.0000	1.0000	1.0000	1.0000	1.0000	1.0000	1.0000	1.0000	1.0000
Total 15-Minute Volume [veh/h]	0	0	144	0	0	108	0	66	0	0	305	0
Total Analysis Volume [veh/h]	0	0	574	0	0	432	0	262	0	0	1219	0
Pedestrian Volume [ped/h]	0			0			0			0		

Intersection Settings

Priority Scheme	Stop	Stop	Free	Free
Flared Lane				
Storage Area [veh]	0	0	0	0
Two-Stage Gap Acceptance	No	No		
Number of Storage Spaces in Median	0	0	0	0

Movement, Approach, & Intersection Results

V/C, Movement V/C Ratio	0.00	0.00	0.64	0.00	0.00	0.99	0.00	0.00	0.00	0.00	0.01	0.00
d_M, Delay for Movement [s/veh]	0.00	0.00	15.94	0.00	0.00	70.77	0.00	0.00	0.00	0.00	0.00	0.00
Movement LOS			C			F		A			A	
95th-Percentile Queue Length [veh/ln]	0.00	0.00	4.80	0.00	0.00	12.37	0.00	0.00	0.00	0.00	0.00	0.00
95th-Percentile Queue Length [ft/ln]	0.00	0.00	120.03	0.00	0.00	309.33	0.00	0.00	0.00	0.00	0.00	0.00
d_A, Approach Delay [s/veh]	15.94			70.77			0.00			0.00		
Approach LOS	C			F			A			A		
d_I, Intersection Delay [s/veh]	15.97											
Intersection LOS	F											

Intersection Level Of Service Report
Intersection 3: Graham Road (NS) at Live Oak Avenue (EW)

Control Type:	Signalized	Delay (sec / veh):	-
Analysis Method:	ICU 1	Level Of Service:	A
Analysis Period:	15 minutes	Volume to Capacity (v/c):	0.569

Intersection Setup

Name	Graham Road		Live Oak Avenue		Live Oak Avenue	
Approach	Northbound		Eastbound		Westbound	
Lane Configuration						
Turning Movement	Left	Right	Thru	Right	Left	Thru
Lane Width [ft]	12.00	12.00	12.00	12.00	12.00	12.00
No. of Lanes in Pocket	0	0	0	0	1	0
Pocket Length [ft]	100.00	100.00	100.00	100.00	205.00	100.00
Speed [mph]	35.00		45.00		45.00	
Grade [%]	0.00		0.00		0.00	
Crosswalk	Yes		No		Yes	

Volumes

Name	Graham Road		Live Oak Avenue		Live Oak Avenue	
Base Volume Input [veh/h]	38	39	578	28	14	1334
Base Volume Adjustment Factor	1.0000	1.0000	1.0000	1.0000	1.0000	1.0000
Heavy Vehicles Percentage [%]	2.00	2.00	2.00	2.00	2.00	2.00
Growth Rate	1.00	1.00	1.00	1.00	1.00	1.00
In-Process Volume [veh/h]	0	0	0	0	0	0
Site-Generated Trips [veh/h]	0	0	105	0	0	14
Diverted Trips [veh/h]	0	0	0	0	0	0
Pass-by Trips [veh/h]	0	0	0	0	0	0
Existing Site Adjustment Volume [veh/h]	0	0	0	0	0	0
Other Volume [veh/h]	0	0	0	0	0	0
Total Hourly Volume [veh/h]	38	39	683	28	14	1348
Peak Hour Factor	1.0000	1.0000	1.0000	1.0000	1.0000	1.0000
Other Adjustment Factor	1.0000	1.0000	1.0000	1.0000	1.0000	1.0000
Total 15-Minute Volume [veh/h]	10	10	171	7	4	337
Total Analysis Volume [veh/h]	38	39	683	28	14	1348
Pedestrian Volume [ped/h]	0		0		0	
Bicycle Volume [bicycles/h]	0		0		0	

Intersection Settings

Cycle Length [s]	100
Lost time [s]	10.00

Phasing & Timing

Control Type	Permissive	Permissive	Permissive	Permissive	Protected	Permissive
Signal group	5	0	8	0	7	4
Auxiliary Signal Groups						
Lead / Lag	Lead	-	-	-	Lead	-

Movement, Approach, & Intersection Results

V/C, Movement V/C Ratio	0.02	0.05	0.21	0.02	0.01	0.42
Intersection LOS	A					
Intersection V/C	0.569					

Intersection Level Of Service Report
Intersection 4: Rivergrade Road (NS) at Live Oak Avenue (EW)

Control Type:	Signalized	Delay (sec / veh):	-
Analysis Method:	ICU 1	Level Of Service:	B
Analysis Period:	15 minutes	Volume to Capacity (v/c):	0.613

Intersection Setup

Name	Rivergrade Raod			Rivergrade Road			Live Oak Avenue			Live Oak Avenue		
Approach	Northbound			Southbound			Eastbound			Westbound		
Lane Configuration												
Turning Movement	Left	Thru	Right	Left	Thru	Right	Left	Thru	Right	Left	Thru	Right
Lane Width [ft]	12.00	12.00	12.00	12.00	12.00	12.00	12.00	12.00	12.00	12.00	12.00	12.00
No. of Lanes in Pocket	1	0	0	1	0	1	1	0	0	1	0	1
Pocket Length [ft]	315.00	100.00	100.00	160.00	100.00	145.00	205.00	100.00	100.00	155.00	100.00	120.00
Speed [mph]	50.00			40.00			45.00			45.00		
Grade [%]	0.00			0.00			0.00			0.00		
Crosswalk	Yes			Yes			Yes			Yes		

Volumes

Name	Rivergrade Raod			Rivergrade Road			Live Oak Avenue			Live Oak Avenue		
Base Volume Input [veh/h]	52	67	138	24	311	58	71	587	77	268	983	22
Base Volume Adjustment Factor	1.0000	1.0000	1.0000	1.0000	1.0000	1.0000	1.0000	1.0000	1.0000	1.0000	1.0000	1.0000
Heavy Vehicles Percentage [%]	2.00	2.00	2.00	2.00	2.00	2.00	2.00	2.00	2.00	2.00	2.00	2.00
Growth Rate	1.00	1.00	1.00	1.00	1.00	1.00	1.00	1.00	1.00	1.00	1.00	1.00
In-Process Volume [veh/h]	0	0	0	0	0	0	0	0	0	0	0	0
Site-Generated Trips [veh/h]	0	0	0	0	0	0	0	105	0	0	14	0
Diverted Trips [veh/h]	0	0	0	0	0	0	0	0	0	0	0	0
Pass-by Trips [veh/h]	0	0	0	0	0	0	0	0	0	0	0	0
Existing Site Adjustment Volume [veh/h]	0	0	0	0	0	0	0	0	0	0	0	0
Other Volume [veh/h]	0	0	0	0	0	0	0	0	0	0	0	0
Total Hourly Volume [veh/h]	52	67	138	24	311	58	71	692	77	268	997	22
Peak Hour Factor	1.0000	1.0000	1.0000	1.0000	1.0000	1.0000	1.0000	1.0000	1.0000	1.0000	1.0000	1.0000
Other Adjustment Factor	1.0000	1.0000	1.0000	1.0000	1.0000	1.0000	1.0000	1.0000	1.0000	1.0000	1.0000	1.0000
Total 15-Minute Volume [veh/h]	13	17	35	6	78	15	18	173	19	67	249	6
Total Analysis Volume [veh/h]	52	67	138	24	311	58	71	692	77	268	997	22
Pedestrian Volume [ped/h]	0			0			0			0		
Bicycle Volume [bicycles/h]	0			0			0			0		

Intersection Settings

Cycle Length [s]	100
Lost time [s]	10.00

Phasing & Timing

Control Type	Protecte	Permiss	Overlap	Protecte	Permiss	Permiss	Protecte	Permiss	Permiss	Protecte	Permiss	Permiss
Signal group	5	2	2	1	6	0	3	8	0	7	4	0
Auxiliary Signal Groups			2,7									
Lead / Lag	Lead	-	-	Lead	-	-	Lead	-	-	Lead	-	-

Movement, Approach, & Intersection Results

V/C, Movement V/C Ratio	0.03	0.04	0.00	0.02	0.10	0.04	0.04	0.22	0.05	0.17	0.31	0.01
Intersection LOS	B											
Intersection V/C	0.613											

Intersection Level Of Service Report
Intersection 5: Stewart Avenue (NS) at Live Oak Avenue (EW)

Control Type:	Signalized	Delay (sec / veh):	-
Analysis Method:	ICU 1	Level Of Service:	D
Analysis Period:	15 minutes	Volume to Capacity (v/c):	0.808

Intersection Setup

Name	Stewart Avenue			Stewart Avenue			Live Oak Avenue			Live Oak Avenue		
Approach	Northbound			Southbound			Eastbound			Westbound		
Lane Configuration												
Turning Movement	Left	Thru	Right	Left	Thru	Right	Left	Thru	Right	Left	Thru	Right
Lane Width [ft]	12.00	12.00	12.00	12.00	12.00	12.00	12.00	12.00	12.00	12.00	12.00	12.00
No. of Lanes in Pocket	0	0	0	1	0	0	1	0	0	1	0	0
Pocket Length [ft]	100.00	100.00	100.00	100.00	100.00	100.00	165.00	100.00	100.00	100.00	100.00	100.00
Speed [mph]	30.00			30.00			45.00			45.00		
Grade [%]	0.00			0.00			0.00			0.00		
Crosswalk	Yes			Yes			No			Yes		

Volumes

Name	Stewart Avenue			Stewart Avenue			Live Oak Avenue			Live Oak Avenue		
Base Volume Input [veh/h]	239	112	28	10	35	49	12	609	25	23	1450	26
Base Volume Adjustment Factor	1.0000	1.0000	1.0000	1.0000	1.0000	1.0000	1.0000	1.0000	1.0000	1.0000	1.0000	1.0000
Heavy Vehicles Percentage [%]	2.00	2.00	2.00	2.00	2.00	2.00	2.00	2.00	2.00	2.00	2.00	2.00
Growth Rate	1.00	1.00	1.00	1.00	1.00	1.00	1.00	1.00	1.00	1.00	1.00	1.00
In-Process Volume [veh/h]	0	0	0	0	0	0	0	0	0	0	0	0
Site-Generated Trips [veh/h]	0	0	0	0	0	0	0	105	0	0	14	0
Diverted Trips [veh/h]	0	0	0	0	0	0	0	0	0	0	0	0
Pass-by Trips [veh/h]	0	0	0	0	0	0	0	0	0	0	0	0
Existing Site Adjustment Volume [veh/h]	0	0	0	0	0	0	0	0	0	0	0	0
Other Volume [veh/h]	0	0	0	0	0	0	0	0	0	0	0	0
Total Hourly Volume [veh/h]	239	112	28	10	35	49	12	714	25	23	1464	26
Peak Hour Factor	1.0000	1.0000	1.0000	1.0000	1.0000	1.0000	1.0000	1.0000	1.0000	1.0000	1.0000	1.0000
Other Adjustment Factor	1.0000	1.0000	1.0000	1.0000	1.0000	1.0000	1.0000	1.0000	1.0000	1.0000	1.0000	1.0000
Total 15-Minute Volume [veh/h]	60	28	7	3	9	12	3	179	6	6	366	7
Total Analysis Volume [veh/h]	239	112	28	10	35	49	12	714	25	23	1464	26
Pedestrian Volume [ped/h]	0			0			0			0		
Bicycle Volume [bicycles/h]	0			0			0			0		

Intersection Settings

Cycle Length [s]	100
Lost time [s]	10.00

Phasing & Timing

Control Type	Permiss	Permiss	Permiss	Permiss	Permiss	Permiss	Permiss	Permiss	Permiss	Permiss	Permiss	Permiss
Signal group	0	2	0	0	6	0	0	8	0	0	4	0
Auxiliary Signal Groups												
Lead / Lag	-	-	-	-	-	-	-	-	-	-	-	-

Movement, Approach, & Intersection Results

V/C, Movement V/C Ratio	0.15	0.24	0.24	0.01	0.02	0.03	0.01	0.22	0.02	0.01	0.46	0.02
Intersection LOS	D											
Intersection V/C	0.808											

Intersection Level Of Service Report
Intersection 6: Baldwin Park Boulevard (NS) at Live Oak Avenue (EW)

Control Type:	Signalized	Delay (sec / veh):	-
Analysis Method:	ICU 1	Level Of Service:	B
Analysis Period:	15 minutes	Volume to Capacity (v/c):	0.605

Intersection Setup

Name	Baldwin Park Boulevard		Live Oak Avenue		Live Oak Avenue	
Approach	Northbound		Eastbound		Westbound	
Lane Configuration						
Turning Movement	Left	Right	Thru	Right	Left	Thru
Lane Width [ft]	12.00	12.00	12.00	12.00	12.00	12.00
No. of Lanes in Pocket	1	0	0	0	1	0
Pocket Length [ft]	100.00	100.00	100.00	100.00	200.00	100.00
Speed [mph]	40.00		45.00		45.00	
Grade [%]	0.00		0.00		0.00	
Crosswalk	Yes		No		No	

Volumes

Name	Baldwin Park Boulevard		Live Oak Avenue		Live Oak Avenue	
Base Volume Input [veh/h]	311	237	581	89	143	1056
Base Volume Adjustment Factor	1.0000	1.0000	1.0000	1.0000	1.0000	1.0000
Heavy Vehicles Percentage [%]	2.00	2.00	2.00	2.00	2.00	2.00
Growth Rate	1.00	1.00	1.00	1.00	1.00	1.00
In-Process Volume [veh/h]	0	0	0	0	0	0
Site-Generated Trips [veh/h]	0	8	105	0	1	14
Diverted Trips [veh/h]	0	0	0	0	0	0
Pass-by Trips [veh/h]	0	0	0	0	0	0
Existing Site Adjustment Volume [veh/h]	0	0	0	0	0	0
Other Volume [veh/h]	0	0	0	0	0	0
Total Hourly Volume [veh/h]	311	245	686	89	144	1070
Peak Hour Factor	1.0000	1.0000	1.0000	1.0000	1.0000	1.0000
Other Adjustment Factor	1.0000	1.0000	1.0000	1.0000	1.0000	1.0000
Total 15-Minute Volume [veh/h]	78	61	172	22	36	268
Total Analysis Volume [veh/h]	311	245	686	89	144	1070
Pedestrian Volume [ped/h]	0		0		0	
Bicycle Volume [bicycles/h]	0		0		0	

Intersection Settings

Cycle Length [s]	100
Lost time [s]	10.00

Phasing & Timing

Control Type	Permissive	Permissive	Permissive	Permissive	Protected	Permissive
Signal group	5	0	8	0	7	4
Auxiliary Signal Groups						
Lead / Lag	Lead	-	-	-	Lead	-

Movement, Approach, & Intersection Results

V/C, Movement V/C Ratio	0.10	0.17	0.21	0.06	0.09	0.33
Intersection LOS	B					
Intersection V/C	0.605					

Intersection Level Of Service Report
Intersection 7: Arrow Highway (NS) at Live Oak Ave/Arrow Hwy (EW)

Control Type:	Signalized	Delay (sec / veh):	-
Analysis Method:	ICU 1	Level Of Service:	B
Analysis Period:	15 minutes	Volume to Capacity (v/c):	0.632

Intersection Setup

Name			Live Oak Avenue		Arrow Highway	
Approach	Southbound		Eastbound		Westbound	
Lane Configuration						
Turning Movement	Left	Right	Left	Thru	Thru	Right
Lane Width [ft]	12.00	12.00	12.00	12.00	12.00	12.00
No. of Lanes in Pocket	0	0	1	0	0	0
Pocket Length [ft]	100.00	100.00	160.00	100.00	100.00	100.00
Speed [mph]	35.00		45.00		45.00	
Grade [%]	0.00		0.00		0.00	
Crosswalk	No		Yes		No	

Volumes

Name			Live Oak Avenue		Arrow Highway	
Base Volume Input [veh/h]	296	59	113	634	1117	1772
Base Volume Adjustment Factor	1.0000	1.0000	1.0000	1.0000	1.0000	1.0000
Heavy Vehicles Percentage [%]	2.00	2.00	2.00	2.00	2.00	2.00
Growth Rate	1.00	1.00	1.00	1.00	1.00	1.00
In-Process Volume [veh/h]	0	0	0	0	0	0
Site-Generated Trips [veh/h]	13	0	0	113	15	2
Diverted Trips [veh/h]	0	0	0	0	0	0
Pass-by Trips [veh/h]	0	0	0	0	0	0
Existing Site Adjustment Volume [veh/h]	0	0	0	0	0	0
Other Volume [veh/h]	0	0	0	0	0	0
Total Hourly Volume [veh/h]	309	59	113	747	1132	1774
Peak Hour Factor	1.0000	1.0000	1.0000	1.0000	1.0000	1.0000
Other Adjustment Factor	1.0000	1.0000	1.0000	1.0000	1.0000	1.0000
Total 15-Minute Volume [veh/h]	77	15	28	187	283	444
Total Analysis Volume [veh/h]	309	59	113	747	1132	1774
Pedestrian Volume [ped/h]	0		0		0	
Bicycle Volume [bicycles/h]	0		0		0	

Intersection Settings

Cycle Length [s]	100
Lost time [s]	10.00

Phasing & Timing

Control Type	Permissive	Permissive	Permissive	Permissive	Permissive	Unsignalized
Signal group	1	0	0	8	4	0
Auxiliary Signal Groups						
Lead / Lag	Lead	-	-	-	-	-

Movement, Approach, & Intersection Results

V/C, Movement V/C Ratio	0.10	0.04	0.07	0.23	0.35	0.00
Intersection LOS	B					
Intersection V/C	0.632					

Intersection Level Of Service Report
Intersection 8: Maine Avenue (NS) at Arrow Highway (EW)

Control Type:	Signalized	Delay (sec / veh):	-
Analysis Method:	ICU 1	Level Of Service:	C
Analysis Period:	15 minutes	Volume to Capacity (v/c):	0.791

Intersection Setup

Name	Maine Avenue		Arrow Highway		Arrow Highway	
Approach	Northbound		Eastbound		Westbound	
Lane Configuration						
Turning Movement	Left	Right	Thru	Right	Left	Thru
Lane Width [ft]	12.00	12.00	12.00	12.00	12.00	12.00
No. of Lanes in Pocket	0	1	0	0	1	0
Pocket Length [ft]	100.00	50.00	100.00	100.00	80.00	100.00
Speed [mph]	35.00		45.00		45.00	
Grade [%]	0.00		0.00		0.00	
Crosswalk	Yes		No		Yes	

Volumes

Name	Maine Avenue		Arrow Highway		Arrow Highway	
Base Volume Input [veh/h]	606	96	869	172	61	2288
Base Volume Adjustment Factor	1.0000	1.0000	1.0000	1.0000	1.0000	1.0000
Heavy Vehicles Percentage [%]	2.00	2.00	2.00	2.00	2.00	2.00
Growth Rate	1.00	1.00	1.00	1.00	1.00	1.00
In-Process Volume [veh/h]	0	0	0	0	0	0
Site-Generated Trips [veh/h]	0	0	126	0	0	17
Diverted Trips [veh/h]	0	0	0	0	0	0
Pass-by Trips [veh/h]	0	0	0	0	0	0
Existing Site Adjustment Volume [veh/h]	0	0	0	0	0	0
Other Volume [veh/h]	0	0	0	0	0	0
Total Hourly Volume [veh/h]	606	96	995	172	61	2305
Peak Hour Factor	1.0000	1.0000	1.0000	1.0000	1.0000	1.0000
Other Adjustment Factor	1.0000	1.0000	1.0000	1.0000	1.0000	1.0000
Total 15-Minute Volume [veh/h]	152	24	249	43	15	576
Total Analysis Volume [veh/h]	606	96	995	172	61	2305
Pedestrian Volume [ped/h]	0		0		0	
Bicycle Volume [bicycles/h]	0		0		0	

Intersection Settings

Cycle Length [s]	100
Lost time [s]	10.00

Phasing & Timing

Control Type	Split	Split	Permissive	Permissive	Permissive	Permissive
Signal group	5	0	8	0	0	4
Auxiliary Signal Groups						
Lead / Lag	Lead	-	-	-	-	-

Movement, Approach, & Intersection Results

V/C, Movement V/C Ratio	0.19	0.06	0.31	0.11	0.04	0.48
Intersection LOS	C					
Intersection V/C	0.791					

Intersection Level Of Service Report

Intersection 9: Santa Fe Dam/Azusa Canyon Road (NS) at Arrow Highway (EW)

Control Type:	Signalized	Delay (sec / veh):	-
Analysis Method:	ICU 1	Level Of Service:	E
Analysis Period:	15 minutes	Volume to Capacity (v/c):	0.926

Intersection Setup

Name	Azusa Canyon Road						Arrow Highway			Arrow Highway		
Approach	Northbound			Southbound			Eastbound			Westbound		
Lane Configuration												
Turning Movement	Left	Thru	Right	Left	Thru	Right	Left	Thru	Right	Left	Thru	Right
Lane Width [ft]	12.00	12.00	12.00	12.00	12.00	12.00	12.00	12.00	12.00	12.00	12.00	12.00
No. of Lanes in Pocket	1	0	0	0	0	0	1	0	0	1	0	0
Pocket Length [ft]	200.00	100.00	100.00	100.00	100.00	100.00	185.00	100.00	100.00	180.00	100.00	100.00
Speed [mph]	35.00			35.00			45.00			45.00		
Grade [%]	0.00			0.00			0.00			0.00		
Crosswalk	Yes			Yes			No			Yes		

Volumes

Name	Azusa Canyon Road						Arrow Highway			Arrow Highway		
Base Volume Input [veh/h]	837	14	145	11	3	12	19	624	122	67	1708	23
Base Volume Adjustment Factor	1.0000	1.0000	1.0000	1.0000	1.0000	1.0000	1.0000	1.0000	1.0000	1.0000	1.0000	1.0000
Heavy Vehicles Percentage [%]	2.00	2.00	2.00	2.00	2.00	2.00	2.00	2.00	2.00	2.00	2.00	2.00
Growth Rate	1.00	1.00	1.00	1.00	1.00	1.00	1.00	1.00	1.00	1.00	1.00	1.00
In-Process Volume [veh/h]	0	0	0	0	0	0	0	0	0	0	0	0
Site-Generated Trips [veh/h]	0	0	8	0	0	0	0	126	0	1	17	0
Diverted Trips [veh/h]	0	0	0	0	0	0	0	0	0	0	0	0
Pass-by Trips [veh/h]	0	0	0	0	0	0	0	0	0	0	0	0
Existing Site Adjustment Volume [veh/h]	0	0	0	0	0	0	0	0	0	0	0	0
Other Volume [veh/h]	0	0	0	0	0	0	0	0	0	0	0	0
Total Hourly Volume [veh/h]	837	14	153	11	3	12	19	750	122	68	1725	23
Peak Hour Factor	1.0000	1.0000	1.0000	1.0000	1.0000	1.0000	1.0000	1.0000	1.0000	1.0000	1.0000	1.0000
Other Adjustment Factor	1.0000	1.0000	1.0000	1.0000	1.0000	1.0000	1.0000	1.0000	1.0000	1.0000	1.0000	1.0000
Total 15-Minute Volume [veh/h]	209	4	38	3	1	3	5	188	31	17	431	6
Total Analysis Volume [veh/h]	837	14	153	11	3	12	19	750	122	68	1725	23
Pedestrian Volume [ped/h]	0			0			0			0		
Bicycle Volume [bicycles/h]	0			0			0			0		

Intersection Settings

Cycle Length [s]	100
Lost time [s]	10.00

Phasing & Timing

Control Type	Split	Split	Split	Split	Split	Split	Protecte	Permiss	Permiss	Protecte	Permiss	Permiss
Signal group	0	2	0	0	6	0	3	8	0	7	4	0
Auxiliary Signal Groups												
Lead / Lag	-	-	-	-	-	-	Lead	-	-	Lead	-	-

Movement, Approach, & Intersection Results

V/C, Movement V/C Ratio	0.26	0.27	0.10	0.01	0.01	0.01	0.01	0.23	0.08	0.04	0.54	0.01
Intersection LOS	E											
Intersection V/C	0.926											

Intersection Level Of Service Report
Intersection 10: 4th Street (NS) at Arrow Highway (EW)

Control Type:	Signalized	Delay (sec / veh):	-
Analysis Method:	ICU 1	Level Of Service:	A
Analysis Period:	15 minutes	Volume to Capacity (v/c):	0.371

Intersection Setup

Name	4th Street			4th Street			Arrow Highway			Arrow Highway		
Approach	Northbound			Southbound			Eastbound			Westbound		
Lane Configuration												
Turning Movement	Left	Thru	Right	Left	Thru	Right	Left	Thru	Right	Left	Thru	Right
Lane Width [ft]	12.00	12.00	12.00	12.00	12.00	12.00	12.00	12.00	12.00	12.00	12.00	12.00
No. of Lanes in Pocket	1	0	0	0	0	0	1	0	1	1	0	0
Pocket Length [ft]	55.00	100.00	100.00	100.00	100.00	100.00	145.00	100.00	150.00	195.00	100.00	100.00
Speed [mph]	35.00			25.00			45.00			45.00		
Grade [%]	0.00			0.00			0.00			0.00		
Crosswalk	Yes			Yes			Yes			Yes		

Volumes

Name	4th Street			4th Street			Arrow Highway			Arrow Highway		
Base Volume Input [veh/h]	76	1	22	3	2	12	20	769	126	77	0	0
Base Volume Adjustment Factor	1.0000	1.0000	1.0000	1.0000	1.0000	1.0000	1.0000	1.0000	1.0000	1.0000	1.0000	1.0000
Heavy Vehicles Percentage [%]	2.00	2.00	2.00	2.00	2.00	2.00	2.00	2.00	2.00	2.00	2.00	2.00
Growth Rate	1.00	1.00	1.00	1.00	1.00	1.00	1.00	1.00	1.00	1.00	1.00	1.00
In-Process Volume [veh/h]	0	0	0	0	0	0	0	0	0	0	0	0
Site-Generated Trips [veh/h]	0	0	0	0	0	0	0	134	0	0	18	0
Diverted Trips [veh/h]	0	0	0	0	0	0	0	0	0	0	0	0
Pass-by Trips [veh/h]	0	0	0	0	0	0	0	0	0	0	0	0
Existing Site Adjustment Volume [veh/h]	0	0	0	0	0	0	0	0	0	0	0	0
Other Volume [veh/h]	0	0	0	0	0	0	0	0	0	0	0	0
Total Hourly Volume [veh/h]	76	1	22	3	2	12	20	903	126	77	18	0
Peak Hour Factor	1.0000	1.0000	1.0000	1.0000	1.0000	1.0000	1.0000	1.0000	1.0000	1.0000	1.0000	1.0000
Other Adjustment Factor	1.0000	1.0000	1.0000	1.0000	1.0000	1.0000	1.0000	1.0000	1.0000	1.0000	1.0000	1.0000
Total 15-Minute Volume [veh/h]	19	0	6	1	1	3	5	226	32	19	5	0
Total Analysis Volume [veh/h]	76	1	22	3	2	12	20	903	126	77	18	0
Pedestrian Volume [ped/h]	0			0			0			0		
Bicycle Volume [bicycles/h]	0			0			0			0		

Intersection Settings

Cycle Length [s]	100
Lost time [s]	10.00

Phasing & Timing

Control Type	Split	Split	Split	Split	Split	Split	Protecte	Permiss	Permiss	Protecte	Permiss	Permiss
Signal group	0	2	0	0	6	0	3	8	0	7	4	0
Auxiliary Signal Groups												
Lead / Lag	-	-	-	-	-	-	Lead	-	-	Lead	-	-

Movement, Approach, & Intersection Results

V/C, Movement V/C Ratio	0.02	0.02	0.01	0.00	0.01	0.01	0.01	0.19	0.08	0.05	0.01	0.00
Intersection LOS	A											
Intersection V/C	0.371											

Intersection Level Of Service Report
Intersection 11: Irwindale Avenue (NS) at I-210 WB Ramps (EW)

Control Type:	Signalized	Delay (sec / veh):	-
Analysis Method:	ICU 1	Level Of Service:	A
Analysis Period:	15 minutes	Volume to Capacity (v/c):	0.459

Intersection Setup

Name	Irwindale Avenue				I-210 WB Ramps	
Approach	Northbound		Southbound		Westbound	
Lane Configuration						
Turning Movement	Thru	Right	Left	Thru	Left	Right
Lane Width [ft]	12.00	12.00	12.00	12.00	12.00	12.00
No. of Lanes in Pocket	0	0	0	0	0	0
Pocket Length [ft]	100.00	100.00	100.00	100.00	100.00	100.00
Speed [mph]	35.00		35.00		35.00	
Grade [%]	0.00		0.00		0.00	
Crosswalk	No		No		Yes	

Volumes

Name	Irwindale Avenue				I-210 WB Ramps	
Base Volume Input [veh/h]	826	0	0	1049	281	169
Base Volume Adjustment Factor	1.0000	1.0000	1.0000	1.0000	1.0000	1.0000
Heavy Vehicles Percentage [%]	2.00	2.00	2.00	2.00	2.00	2.00
Growth Rate	1.00	1.00	1.00	1.00	1.00	1.00
In-Process Volume [veh/h]	0	0	0	0	0	0
Site-Generated Trips [veh/h]	0	0	0	0	0	0
Diverted Trips [veh/h]	0	0	0	0	0	0
Pass-by Trips [veh/h]	0	0	0	0	0	0
Existing Site Adjustment Volume [veh/h]	0	0	0	0	0	0
Other Volume [veh/h]	0	0	0	0	0	0
Total Hourly Volume [veh/h]	826	0	0	1049	281	169
Peak Hour Factor	1.0000	1.0000	1.0000	1.0000	1.0000	1.0000
Other Adjustment Factor	1.0000	1.0000	1.0000	1.0000	1.0000	1.0000
Total 15-Minute Volume [veh/h]	207	0	0	262	70	42
Total Analysis Volume [veh/h]	826	0	0	1049	281	169
Pedestrian Volume [ped/h]	0		0		0	
Bicycle Volume [bicycles/h]	0		0		0	

Intersection Settings

Cycle Length [s]	100
Lost time [s]	10.00

Phasing & Timing

Control Type	Permissive	Permissive	Permissive	Permissive	Split	Split
Signal group	2	0	0	6	7	0
Auxiliary Signal Groups						
Lead / Lag	-	-	-	-	Lead	-

Movement, Approach, & Intersection Results

V/C, Movement V/C Ratio	0.17	0.00	0.00	0.22	0.09	0.14
Intersection LOS	A					
Intersection V/C	0.459					

Intersection Level Of Service Report
Intersection 12: Irwindale Avenue (NS) at I-210 EB Ramps (EW)

Control Type:	Signalized	Delay (sec / veh):	-
Analysis Method:	ICU 1	Level Of Service:	B
Analysis Period:	15 minutes	Volume to Capacity (v/c):	0.681

Intersection Setup

Name	Irwindale Avenue			Irwindale Avenue			I-210 EB Ramps			I-210 EB Ramps		
Approach	Northbound			Southbound			Eastbound			Westbound		
Lane Configuration												
Turning Movement	Left	Thru	Right	Left	Thru	Right	Left	Thru	Right	Left	Thru	Right
Lane Width [ft]	12.00	12.00	12.00	12.00	12.00	12.00	12.00	12.00	12.00	12.00	12.00	12.00
No. of Lanes in Pocket	0	0	1	1	0	0	0	0	0	0	0	0
Pocket Length [ft]	100.00	100.00	505.00	330.00	100.00	100.00	100.00	100.00	100.00	100.00	100.00	100.00
Speed [mph]	35.00			35.00			35.00			35.00		
Grade [%]	0.00			0.00			0.00			0.00		
Crosswalk	No			No			No			Yes		

Volumes

Name	Irwindale Avenue			Irwindale Avenue			I-210 EB Ramps			I-210 EB Ramps		
Base Volume Input [veh/h]	0	829	235	167	595	0	444	0	748	0	0	0
Base Volume Adjustment Factor	1.0000	1.0000	1.0000	1.0000	1.0000	1.0000	1.0000	1.0000	1.0000	1.0000	1.0000	1.0000
Heavy Vehicles Percentage [%]	2.00	2.00	2.00	2.00	2.00	2.00	2.00	2.00	2.00	2.00	2.00	2.00
Growth Rate	1.00	1.00	1.00	1.00	1.00	1.00	1.00	1.00	1.00	1.00	1.00	1.00
In-Process Volume [veh/h]	0	0	0	0	0	0	0	0	0	0	0	0
Site-Generated Trips [veh/h]	0	8	0	0	0	0	0	0	64	0	0	0
Diverted Trips [veh/h]	0	0	0	0	0	0	0	0	0	0	0	0
Pass-by Trips [veh/h]	0	0	0	0	0	0	0	0	0	0	0	0
Existing Site Adjustment Volume [veh/h]	0	0	0	0	0	0	0	0	0	0	0	0
Other Volume [veh/h]	0	0	0	0	0	0	0	0	0	0	0	0
Total Hourly Volume [veh/h]	0	837	235	167	595	0	444	0	812	0	0	0
Peak Hour Factor	1.0000	1.0000	1.0000	1.0000	1.0000	1.0000	1.0000	1.0000	1.0000	1.0000	1.0000	1.0000
Other Adjustment Factor	1.0000	1.0000	1.0000	1.0000	1.0000	1.0000	1.0000	1.0000	1.0000	1.0000	1.0000	1.0000
Total 15-Minute Volume [veh/h]	0	209	59	42	149	0	111	0	203	0	0	0
Total Analysis Volume [veh/h]	0	837	235	167	595	0	444	0	812	0	0	0
Pedestrian Volume [ped/h]	0			0			0			0		
Bicycle Volume [bicycles/h]	0			0			0			0		

Intersection Settings

Cycle Length [s]	100
Lost time [s]	10.00

Phasing & Timing

Control Type	Permiss	Permiss	Permiss	Protecte	Permiss	Permiss	Split	Permiss	Split	Permiss	Permiss	Permiss
Signal group	0	2	0	1	6	0	3	0	0	0	0	0
Auxiliary Signal Groups												
Lead / Lag	-	-	-	Lead	-	-	Lead	-	-	-	-	-

Movement, Approach, & Intersection Results

V/C, Movement V/C Ratio	0.00	0.26	0.15	0.05	0.19	0.00	0.14	0.00	0.26	0.00	0.00	0.00
Intersection LOS	B											
Intersection V/C	0.681											

Intersection Level Of Service Report

Intersection 13: Irwindale Avenue (NS) at Jardin De Roca/Irwindale Rd (EW)

Control Type:	Signalized	Delay (sec / veh):	-
Analysis Method:	ICU 1	Level Of Service:	A
Analysis Period:	15 minutes	Volume to Capacity (v/c):	0.568

Intersection Setup

Name	Irwindale Avenue			Irwindale Avenue			Jardin De Roca			Irwindale Road		
Approach	Northbound			Southbound			Eastbound			Westbound		
Lane Configuration												
Turning Movement	Left	Thru	Right	Left	Thru	Right	Left	Thru	Right	Left	Thru	Right
Lane Width [ft]	12.00	12.00	12.00	12.00	12.00	12.00	12.00	12.00	12.00	12.00	12.00	12.00
No. of Lanes in Pocket	1	0	1	1	0	0	0	0	0	0	0	0
Pocket Length [ft]	130.00	100.00	180.00	245.00	100.00	100.00	100.00	100.00	100.00	100.00	100.00	100.00
Speed [mph]	35.00			35.00			25.00			25.00		
Grade [%]	0.00			0.00			0.00			0.00		
Crosswalk	No			No			No			Yes		

Volumes

Name	Irwindale Avenue			Irwindale Avenue			Jardin De Roca			Irwindale Road		
Base Volume Input [veh/h]	53	1015	115	168	1133	41	10	0	13	24	0	35
Base Volume Adjustment Factor	1.0000	1.0000	1.0000	1.0000	1.0000	1.0000	1.0000	1.0000	1.0000	1.0000	1.0000	1.0000
Heavy Vehicles Percentage [%]	2.00	2.00	2.00	2.00	2.00	2.00	2.00	2.00	2.00	2.00	2.00	2.00
Growth Rate	1.00	1.00	1.00	1.00	1.00	1.00	1.00	1.00	1.00	1.00	1.00	1.00
In-Process Volume [veh/h]	0	0	0	0	0	0	0	0	0	0	0	0
Site-Generated Trips [veh/h]	0	8	0	0	64	0	0	0	0	0	0	0
Diverted Trips [veh/h]	0	0	0	0	0	0	0	0	0	0	0	0
Pass-by Trips [veh/h]	0	0	0	0	0	0	0	0	0	0	0	0
Existing Site Adjustment Volume [veh/h]	0	0	0	0	0	0	0	0	0	0	0	0
Other Volume [veh/h]	0	0	0	0	0	0	0	0	0	0	0	0
Total Hourly Volume [veh/h]	53	1023	115	168	1197	41	10	0	13	24	0	35
Peak Hour Factor	1.0000	1.0000	1.0000	1.0000	1.0000	1.0000	1.0000	1.0000	1.0000	1.0000	1.0000	1.0000
Other Adjustment Factor	1.0000	1.0000	1.0000	1.0000	1.0000	1.0000	1.0000	1.0000	1.0000	1.0000	1.0000	1.0000
Total 15-Minute Volume [veh/h]	13	256	29	42	299	10	3	0	3	6	0	9
Total Analysis Volume [veh/h]	53	1023	115	168	1197	41	10	0	13	24	0	35
Pedestrian Volume [ped/h]	0			0			0			0		
Bicycle Volume [bicycles/h]	0			0			0			0		

Intersection Settings

Cycle Length [s]	100
Lost time [s]	10.00

Phasing & Timing

Control Type	Protecte	Permiss	Permiss	Protecte	Permiss	Permiss	Permiss	Permiss	Permiss	Permiss	Permiss	Permiss
Signal group	5	2	0	1	6	0	3	0	0	7	0	0
Auxiliary Signal Groups												
Lead / Lag	Lead	-	-	Lead	-	-	Lead	-	-	Lead	-	-

Movement, Approach, & Intersection Results

V/C, Movement V/C Ratio	0.03	0.32	0.07	0.11	0.37	0.03	0.01	0.00	0.01	0.02	0.00	0.05
Intersection LOS	A											
Intersection V/C	0.568											

Intersection Level Of Service Report
Intersection 14: Irwindale Avenue (NS) at 1st Street (EW)

Control Type:	Signalized	Delay (sec / veh):	-
Analysis Method:	ICU 1	Level Of Service:	A
Analysis Period:	15 minutes	Volume to Capacity (v/c):	0.505

Intersection Setup

Name	Irwindale Avenue			Irwindale Avenue			1st Street			1st Street		
Approach	Northbound			Southbound			Eastbound			Westbound		
Lane Configuration												
Turning Movement	Left	Thru	Right	Left	Thru	Right	Left	Thru	Right	Left	Thru	Right
Lane Width [ft]	12.00	12.00	12.00	12.00	12.00	12.00	12.00	12.00	12.00	12.00	12.00	12.00
No. of Lanes in Pocket	1	0	1	1	0	1	1	0	1	1	0	1
Pocket Length [ft]	100.00	100.00	70.00	120.00	100.00	240.00	90.00	100.00	95.00	75.00	100.00	75.00
Speed [mph]	35.00			35.00			35.00			25.00		
Grade [%]	0.00			0.00			0.00			0.00		
Crosswalk	Yes			No			Yes			Yes		

Volumes

Name	Irwindale Avenue			Irwindale Avenue			1st Street			1st Street		
Base Volume Input [veh/h]	38	1187	4	14	827	130	54	0	21	0	0	8
Base Volume Adjustment Factor	1.0000	1.0000	1.0000	1.0000	1.0000	1.0000	1.0000	1.0000	1.0000	1.0000	1.0000	1.0000
Heavy Vehicles Percentage [%]	2.00	2.00	2.00	2.00	2.00	2.00	2.00	2.00	2.00	2.00	2.00	2.00
Growth Rate	1.00	1.00	1.00	1.00	1.00	1.00	1.00	1.00	1.00	1.00	1.00	1.00
In-Process Volume [veh/h]	0	0	0	0	0	0	0	0	0	0	0	0
Site-Generated Trips [veh/h]	0	8	0	0	64	0	0	0	0	0	0	0
Diverted Trips [veh/h]	0	0	0	0	0	0	0	0	0	0	0	0
Pass-by Trips [veh/h]	0	0	0	0	0	0	0	0	0	0	0	0
Existing Site Adjustment Volume [veh/h]	0	0	0	0	0	0	0	0	0	0	0	0
Other Volume [veh/h]	0	0	0	0	0	0	0	0	0	0	0	0
Total Hourly Volume [veh/h]	38	1195	4	14	891	130	54	0	21	0	0	8
Peak Hour Factor	1.0000	1.0000	1.0000	1.0000	1.0000	1.0000	1.0000	1.0000	1.0000	1.0000	1.0000	1.0000
Other Adjustment Factor	1.0000	1.0000	1.0000	1.0000	1.0000	1.0000	1.0000	1.0000	1.0000	1.0000	1.0000	1.0000
Total 15-Minute Volume [veh/h]	10	299	1	4	223	33	14	0	5	0	0	2
Total Analysis Volume [veh/h]	38	1195	4	14	891	130	54	0	21	0	0	8
Pedestrian Volume [ped/h]	0			0			0			0		
Bicycle Volume [bicycles/h]	0			0			0			0		

Intersection Settings

Cycle Length [s]	100
Lost time [s]	10.00

Phasing & Timing

Control Type	Permiss	Permiss	Permiss	Permiss	Permiss	Permiss	Split	Split	Split	Split	Split	Split
Signal group	0	2	0	0	6	0	0	8	0	0	4	0
Auxiliary Signal Groups												
Lead / Lag	-	-	-	-	-	-	-	-	-	-	-	-

Movement, Approach, & Intersection Results

V/C, Movement V/C Ratio	0.02	0.37	0.37	0.01	0.19	0.08	0.02	0.00	0.01	0.00	0.00	0.01
Intersection LOS	A											
Intersection V/C	0.505											

Intersection Level Of Service Report
Intersection 15: Irwindale Avenue (NS) at Gladstone Street (EW)

Control Type:	Signalized	Delay (sec / veh):	-
Analysis Method:	ICU 1	Level Of Service:	B
Analysis Period:	15 minutes	Volume to Capacity (v/c):	0.666

Intersection Setup

Name	Irwindale Avenue			Irwindale Avenue			Gladstone Street			Gladstone Street		
Approach	Northbound			Southbound			Eastbound			Westbound		
Lane Configuration												
Turning Movement	Left	Thru	Right	Left	Thru	Right	Left	Thru	Right	Left	Thru	Right
Lane Width [ft]	12.00	12.00	12.00	12.00	12.00	12.00	12.00	12.00	12.00	12.00	12.00	12.00
No. of Lanes in Pocket	1	0	0	2	0	0	1	0	0	1	0	1
Pocket Length [ft]	120.00	100.00	100.00	210.00	100.00	100.00	50.00	100.00	100.00	200.00	100.00	190.00
Speed [mph]	35.00			35.00			25.00			40.00		
Grade [%]	0.00			0.00			0.00			0.00		
Crosswalk	Yes			Yes			Yes			Yes		

Volumes

Name	Irwindale Avenue			Irwindale Avenue			Gladstone Street			Gladstone Street		
Base Volume Input [veh/h]	10	634	67	135	551	6	1	10	22	456	70	680
Base Volume Adjustment Factor	1.0000	1.0000	1.0000	1.0000	1.0000	1.0000	1.0000	1.0000	1.0000	1.0000	1.0000	1.0000
Heavy Vehicles Percentage [%]	2.00	2.00	2.00	2.00	2.00	2.00	2.00	2.00	2.00	2.00	2.00	2.00
Growth Rate	1.00	1.00	1.00	1.00	1.00	1.00	1.00	1.00	1.00	1.00	1.00	1.00
In-Process Volume [veh/h]	0	0	0	0	0	0	0	0	0	0	0	0
Site-Generated Trips [veh/h]	0	0	0	64	0	0	0	0	0	0	0	8
Diverted Trips [veh/h]	0	0	0	0	0	0	0	0	0	0	0	0
Pass-by Trips [veh/h]	0	0	0	0	0	0	0	0	0	0	0	0
Existing Site Adjustment Volume [veh/h]	0	0	0	0	0	0	0	0	0	0	0	0
Other Volume [veh/h]	0	0	0	0	0	0	0	0	0	0	0	0
Total Hourly Volume [veh/h]	10	634	67	199	551	6	1	10	22	456	70	688
Peak Hour Factor	1.0000	1.0000	1.0000	1.0000	1.0000	1.0000	1.0000	1.0000	1.0000	1.0000	1.0000	1.0000
Other Adjustment Factor	1.0000	1.0000	1.0000	1.0000	1.0000	1.0000	1.0000	1.0000	1.0000	1.0000	1.0000	1.0000
Total 15-Minute Volume [veh/h]	3	159	17	50	138	2	0	3	6	114	18	172
Total Analysis Volume [veh/h]	10	634	67	199	551	6	1	10	22	456	70	688
Pedestrian Volume [ped/h]	0			0			0			0		
Bicycle Volume [bicycles/h]	0			0			0			0		

Intersection Settings

Cycle Length [s]	100
Lost time [s]	10.00

Phasing & Timing

Control Type	Protecte	Permiss	Permiss	Protecte	Permiss	Permiss	Permiss	Permiss	Permiss	Permiss	Permiss	Overlap
Signal group	5	2	0	1	6	0	0	8	0	0	4	4
Auxiliary Signal Groups												1,4
Lead / Lag	Lead	-	-	Lead	-	-	-	-	-	-	-	-

Movement, Approach, & Intersection Results

V/C, Movement V/C Ratio	0.01	0.20	0.04	0.06	0.17	0.17	0.00	0.01	0.01	0.29	0.04	0.15
Intersection LOS	B											
Intersection V/C	0.666											

Intersection Level Of Service Report

Intersection 16: Irwindale Avenue (NS) at Arrow Highway (EW)

Control Type:	Signalized	Delay (sec / veh):	-
Analysis Method:	ICU 1	Level Of Service:	D
Analysis Period:	15 minutes	Volume to Capacity (v/c):	0.846

Intersection Setup

Name	Irwindale Avenue			Irwindale Avenue			Arrow Highway			Arrow Highway		
Approach	Northbound			Southbound			Eastbound			Westbound		
Lane Configuration												
Turning Movement	Left	Thru	Right	Left	Thru	Right	Left	Thru	Right	Left	Thru	Right
Lane Width [ft]	12.00	12.00	12.00	12.00	12.00	12.00	12.00	12.00	12.00	12.00	12.00	12.00
No. of Lanes in Pocket	1	0	0	1	0	1	2	0	0	1	0	0
Pocket Length [ft]	175.00	100.00	100.00	185.00	100.00	185.00	205.00	100.00	100.00	335.00	100.00	100.00
Speed [mph]	35.00			35.00			45.00			45.00		
Grade [%]	0.00			0.00			0.00			0.00		
Crosswalk	Yes			Yes			Yes			Yes		

Volumes

Name	Irwindale Avenue			Irwindale Avenue			Arrow Highway			Arrow Highway		
Base Volume Input [veh/h]	163	579	65	98	457	446	277	423	52	67	1022	98
Base Volume Adjustment Factor	1.0000	1.0000	1.0000	1.0000	1.0000	1.0000	1.0000	1.0000	1.0000	1.0000	1.0000	1.0000
Heavy Vehicles Percentage [%]	2.00	2.00	2.00	2.00	2.00	2.00	2.00	2.00	2.00	2.00	2.00	2.00
Growth Rate	1.00	1.00	1.00	1.00	1.00	1.00	1.00	1.00	1.00	1.00	1.00	1.00
In-Process Volume [veh/h]	0	0	0	0	0	0	0	0	0	0	0	0
Site-Generated Trips [veh/h]	0	0	8	0	0	0	0	134	0	1	18	0
Diverted Trips [veh/h]	0	0	0	0	0	0	0	0	0	0	0	0
Pass-by Trips [veh/h]	0	0	0	0	0	0	0	0	0	0	0	0
Existing Site Adjustment Volume [veh/h]	0	0	0	0	0	0	0	0	0	0	0	0
Other Volume [veh/h]	0	0	0	0	0	0	0	0	0	0	0	0
Total Hourly Volume [veh/h]	163	579	73	98	457	446	277	557	52	68	1040	98
Peak Hour Factor	1.0000	1.0000	1.0000	1.0000	1.0000	1.0000	1.0000	1.0000	1.0000	1.0000	1.0000	1.0000
Other Adjustment Factor	1.0000	1.0000	1.0000	1.0000	1.0000	1.0000	1.0000	1.0000	1.0000	1.0000	1.0000	1.0000
Total 15-Minute Volume [veh/h]	41	145	18	25	114	112	69	139	13	17	260	25
Total Analysis Volume [veh/h]	163	579	73	98	457	446	277	557	52	68	1040	98
Pedestrian Volume [ped/h]	0			0			0			0		
Bicycle Volume [bicycles/h]	0			0			0			0		

Intersection Settings

Cycle Length [s]	100
Lost time [s]	10.00

Phasing & Timing

Control Type	Protecte	Permiss	Permiss	Protecte	Permiss	Overlap	Protecte	Permiss	Permiss	Protecte	Permiss	Permiss
Signal group	5	2	0	1	6	6	3	8	0	7	4	0
Auxiliary Signal Groups						3,6						
Lead / Lag	Lead	-	-	Lead	-	-	Lead	-	-	Lead	-	-

Movement, Approach, & Intersection Results

V/C, Movement V/C Ratio	0.10	0.20	0.20	0.06	0.14	0.19	0.09	0.13	0.13	0.04	0.36	0.36
Intersection LOS	D											
Intersection V/C	0.846											

Intersection Level Of Service Report

Intersection 17: Vincent Avenue (NS) at Gladstone Street (EW)

Control Type:	Signalized	Delay (sec / veh):	-
Analysis Method:	ICU 1	Level Of Service:	A
Analysis Period:	15 minutes	Volume to Capacity (v/c):	0.530

Intersection Setup

Name	Vincent Avenue			Vincent Avenue			Gladstone Street			Gladstone Street		
Approach	Northbound			Southbound			Eastbound			Westbound		
Lane Configuration												
Turning Movement	Left	Thru	Right	Left	Thru	Right	Left	Thru	Right	Left	Thru	Right
Lane Width [ft]	12.00	12.00	12.00	12.00	12.00	12.00	12.00	12.00	12.00	12.00	12.00	12.00
No. of Lanes in Pocket	1	0	0	0	0	0	2	0	0	1	0	0
Pocket Length [ft]	195.00	100.00	100.00	100.00	100.00	100.00	230.00	100.00	100.00	175.00	100.00	100.00
Speed [mph]	45.00			25.00			45.00			45.00		
Grade [%]	0.00			0.00			0.00			0.00		
Crosswalk	Yes			Yes			No			Yes		

Volumes

Name	Vincent Avenue			Vincent Avenue			Gladstone Street			Gladstone Street		
Base Volume Input [veh/h]	265	29	147	16	8	38	43	97	64	178	942	2
Base Volume Adjustment Factor	1.0000	1.0000	1.0000	1.0000	1.0000	1.0000	1.0000	1.0000	1.0000	1.0000	1.0000	1.0000
Heavy Vehicles Percentage [%]	2.00	2.00	2.00	2.00	2.00	2.00	2.00	2.00	2.00	2.00	2.00	2.00
Growth Rate	1.00	1.00	1.00	1.00	1.00	1.00	1.00	1.00	1.00	1.00	1.00	1.00
In-Process Volume [veh/h]	0	0	0	0	0	0	0	0	0	0	0	0
Site-Generated Trips [veh/h]	8	0	14	0	0	0	0	0	64	102	0	0
Diverted Trips [veh/h]	0	0	0	0	0	0	0	0	0	0	0	0
Pass-by Trips [veh/h]	0	0	0	0	0	0	0	0	0	0	0	0
Existing Site Adjustment Volume [veh/h]	0	0	0	0	0	0	0	0	0	0	0	0
Other Volume [veh/h]	0	0	0	0	0	0	0	0	0	0	0	0
Total Hourly Volume [veh/h]	273	29	161	16	8	38	43	97	128	280	942	2
Peak Hour Factor	1.0000	1.0000	1.0000	1.0000	1.0000	1.0000	1.0000	1.0000	1.0000	1.0000	1.0000	1.0000
Other Adjustment Factor	1.0000	1.0000	1.0000	1.0000	1.0000	1.0000	1.0000	1.0000	1.0000	1.0000	1.0000	1.0000
Total 15-Minute Volume [veh/h]	68	7	40	4	2	10	11	24	32	70	236	1
Total Analysis Volume [veh/h]	273	29	161	16	8	38	43	97	128	280	942	2
Pedestrian Volume [ped/h]	0			0			0			0		
Bicycle Volume [bicycles/h]	0			0			0			0		

Intersection Settings

Cycle Length [s]	100
Lost time [s]	10.00

Phasing & Timing

Control Type	Split	Split	Split	Split	Split	Split	Protecte	Permiss	Permiss	Protecte	Permiss	Permiss
Signal group	0	2	0	0	6	0	3	8	0	7	4	0
Auxiliary Signal Groups												
Lead / Lag	-	-	-	-	-	-	Lead	-	-	Lead	-	-

Movement, Approach, & Intersection Results

V/C, Movement V/C Ratio	0.09	0.09	0.10	0.01	0.03	0.03	0.01	0.07	0.07	0.18	0.30	0.30
Intersection LOS	A											
Intersection V/C	0.530											

Intersection Level Of Service Report

Intersection 18: Vincent Avenue (NS) at Arrow Highway (EW)

Control Type:	Signalized	Delay (sec / veh):	-
Analysis Method:	ICU 1	Level Of Service:	C
Analysis Period:	15 minutes	Volume to Capacity (v/c):	0.739

Intersection Setup

Name	Vincent Avenue			Vincent Avenue			Arrow Highway			Arrow Highway		
Approach	Northbound			Southbound			Eastbound			Westbound		
Lane Configuration												
Turning Movement	Left	Thru	Right	Left	Thru	Right	Left	Thru	Right	Left	Thru	Right
Lane Width [ft]	12.00	12.00	12.00	12.00	12.00	12.00	12.00	12.00	12.00	12.00	12.00	12.00
No. of Lanes in Pocket	1	0	0	1	0	0	1	0	0	1	0	0
Pocket Length [ft]	200.00	100.00	100.00	200.00	100.00	100.00	215.00	100.00	100.00	160.00	100.00	100.00
Speed [mph]	45.00			45.00			45.00			45.00		
Grade [%]	0.00			0.00			0.00			0.00		
Crosswalk	Yes			Yes			Yes			Yes		

Volumes

Name	Vincent Avenue			Vincent Avenue			Arrow Highway			Arrow Highway		
Base Volume Input [veh/h]	161	285	88	22	189	65	58	378	88	138	1150	89
Base Volume Adjustment Factor	1.0000	1.0000	1.0000	1.0000	1.0000	1.0000	1.0000	1.0000	1.0000	1.0000	1.0000	1.0000
Heavy Vehicles Percentage [%]	2.00	2.00	2.00	2.00	2.00	2.00	2.00	2.00	2.00	2.00	2.00	2.00
Growth Rate	1.00	1.00	1.00	1.00	1.00	1.00	1.00	1.00	1.00	1.00	1.00	1.00
In-Process Volume [veh/h]	0	0	0	0	0	0	0	0	0	0	0	0
Site-Generated Trips [veh/h]	19	22	4	0	166	0	0	0	142	26	0	0
Diverted Trips [veh/h]	0	0	0	0	0	0	0	0	0	0	0	0
Pass-by Trips [veh/h]	0	0	0	0	0	0	0	0	0	0	0	0
Existing Site Adjustment Volume [veh/h]	0	0	0	0	0	0	0	0	0	0	0	0
Other Volume [veh/h]	0	0	0	0	0	0	0	0	0	0	0	0
Total Hourly Volume [veh/h]	180	307	92	22	355	65	58	378	230	164	1150	89
Peak Hour Factor	1.0000	1.0000	1.0000	1.0000	1.0000	1.0000	1.0000	1.0000	1.0000	1.0000	1.0000	1.0000
Other Adjustment Factor	1.0000	1.0000	1.0000	1.0000	1.0000	1.0000	1.0000	1.0000	1.0000	1.0000	1.0000	1.0000
Total 15-Minute Volume [veh/h]	45	77	23	6	89	16	15	95	58	41	288	22
Total Analysis Volume [veh/h]	180	307	92	22	355	65	58	378	230	164	1150	89
Pedestrian Volume [ped/h]	0			0			0			0		
Bicycle Volume [bicycles/h]	0			0			0			0		

Intersection Settings

Cycle Length [s]	100
Lost time [s]	10.00

Phasing & Timing

Control Type	Permiss	Permiss	Permiss	Permiss	Permiss	Permiss	Permiss	Permiss	Permiss	Permiss	Permiss	Permiss
Signal group	0	2	0	0	6	0	0	8	0	0	4	0
Auxiliary Signal Groups												
Lead / Lag	-	-	-	-	-	-	-	-	-	-	-	-

Movement, Approach, & Intersection Results

V/C, Movement V/C Ratio	0.11	0.12	0.12	0.01	0.13	0.13	0.04	0.12	0.14	0.10	0.36	0.06
Intersection LOS	C											
Intersection V/C	0.739											

Intersection Level Of Service Report
Intersection 19: Vincent Avenue (NS) at Project North Driveway (EW)

Control Type:	Two-way stop	Delay (sec / veh):	14.6
Analysis Method:	HCM 6th Edition	Level Of Service:	B
Analysis Period:	15 minutes	Volume to Capacity (v/c):	0.060

Intersection Setup

Name	Vincent Avenue		Vincent Avenue		Project North Driveway	
Approach	Northbound		Southbound		Eastbound	
Lane Configuration						
Turning Movement	Left	Thru	Thru	Right	Left	Right
Lane Width [ft]	12.00	12.00	12.00	12.00	12.00	12.00
No. of Lanes in Pocket	0	0	0	0	0	0
Pocket Length [ft]	100.00	100.00	100.00	100.00	100.00	100.00
Speed [mph]	45.00		45.00		15.00	
Grade [%]	0.00		0.00		0.00	
Crosswalk	No		No		No	

Volumes

Name	Vincent Avenue		Vincent Avenue		Project North Driveway	
Base Volume Input [veh/h]	0	534	534	0	0	0
Base Volume Adjustment Factor	1.0000	1.0000	1.0000	1.0000	1.0000	1.0000
Heavy Vehicles Percentage [%]	2.00	2.00	2.00	2.00	2.00	2.00
Growth Rate	1.00	1.00	1.00	1.00	1.00	1.00
In-Process Volume [veh/h]	0	0	0	0	0	0
Site-Generated Trips [veh/h]	34	21	155	179	24	5
Diverted Trips [veh/h]	0	0	0	0	0	0
Pass-by Trips [veh/h]	0	0	0	0	0	0
Existing Site Adjustment Volume [veh/h]	0	0	0	0	0	0
Other Volume [veh/h]	0	0	0	0	0	0
Total Hourly Volume [veh/h]	34	555	689	179	24	5
Peak Hour Factor	1.0000	1.0000	1.0000	1.0000	1.0000	1.0000
Other Adjustment Factor	1.0000	1.0000	1.0000	1.0000	1.0000	1.0000
Total 15-Minute Volume [veh/h]	9	139	172	45	6	1
Total Analysis Volume [veh/h]	34	555	689	179	24	5
Pedestrian Volume [ped/h]	0		0		0	

Intersection Settings

Priority Scheme	Free	Free	Stop
Flared Lane			
Storage Area [veh]	0	0	0
Two-Stage Gap Acceptance			Yes
Number of Storage Spaces in Median	0	0	2

Movement, Approach, & Intersection Results

V/C, Movement V/C Ratio	0.04	0.01	0.01	0.00	0.06	0.01
d_M, Delay for Movement [s/veh]	9.88	0.00	0.00	0.00	14.60	10.57
Movement LOS	A	A	A	A	B	B
95th-Percentile Queue Length [veh/ln]	0.14	0.00	0.00	0.00	0.19	0.02
95th-Percentile Queue Length [ft/ln]	3.45	0.00	0.00	0.00	4.78	0.58
d_A, Approach Delay [s/veh]	0.57		0.00		13.91	
Approach LOS	A		A		B	
d_I, Intersection Delay [s/veh]	0.50					
Intersection LOS	B					

Intersection Level Of Service Report
Intersection 20: Vincent Avenue (NS) at Project South Driveway (EW)

Control Type:	Two-way stop	Delay (sec / veh):	12.7
Analysis Method:	HCM 6th Edition	Level Of Service:	B
Analysis Period:	15 minutes	Volume to Capacity (v/c):	0.043

Intersection Setup

Name	Vincent Avenue		Vincent Avenue		Project South Driveway	
Approach	Northbound		Southbound		Eastbound	
Lane Configuration						
Turning Movement	Left	Thru	Thru	Right	Left	Right
Lane Width [ft]	12.00	12.00	12.00	12.00	12.00	12.00
No. of Lanes in Pocket	0	0	0	0	0	0
Pocket Length [ft]	100.00	100.00	100.00	100.00	100.00	100.00
Speed [mph]	45.00		45.00		15.00	
Grade [%]	0.00		0.00		0.00	
Crosswalk	No		No		No	

Volumes

Name	Vincent Avenue		Vincent Avenue		Project South Driveway	
Base Volume Input [veh/h]	0	534	412	0	0	0
Base Volume Adjustment Factor	1.0000	1.0000	1.0000	1.0000	1.0000	1.0000
Heavy Vehicles Percentage [%]	2.00	2.00	2.00	2.00	2.00	2.00
Growth Rate	1.00	1.00	1.00	1.00	1.00	1.00
In-Process Volume [veh/h]	0	0	0	0	0	0
Site-Generated Trips [veh/h]	58	34	5	155	21	8
Diverted Trips [veh/h]	0	0	0	0	0	0
Pass-by Trips [veh/h]	0	0	0	0	0	0
Existing Site Adjustment Volume [veh/h]	0	0	0	0	0	0
Other Volume [veh/h]	0	0	0	0	0	0
Total Hourly Volume [veh/h]	58	568	417	155	21	8
Peak Hour Factor	1.0000	1.0000	1.0000	1.0000	1.0000	1.0000
Other Adjustment Factor	1.0000	1.0000	1.0000	1.0000	1.0000	1.0000
Total 15-Minute Volume [veh/h]	15	142	104	39	5	2
Total Analysis Volume [veh/h]	58	568	417	155	21	8
Pedestrian Volume [ped/h]	0		0		0	

Intersection Settings

Priority Scheme	Free	Free	Stop
Flared Lane			
Storage Area [veh]	0	0	0
Two-Stage Gap Acceptance			Yes
Number of Storage Spaces in Median	0	0	2

Movement, Approach, & Intersection Results

V/C, Movement V/C Ratio	0.06	0.01	0.00	0.00	0.04	0.01
d_M, Delay for Movement [s/veh]	8.83	0.00	0.00	0.00	12.74	9.56
Movement LOS	A	A	A	A	B	A
95th-Percentile Queue Length [veh/ln]	0.19	0.00	0.00	0.00	0.14	0.03
95th-Percentile Queue Length [ft/ln]	4.63	0.00	0.00	0.00	3.38	0.76
d_A, Approach Delay [s/veh]	0.82		0.00		11.86	
Approach LOS	A		A		B	
d_I, Intersection Delay [s/veh]	0.70					
Intersection LOS	B					

Intersection Level Of Service Report
Intersection 21: Vincent Avenue (NS) at Cypress Street (EW)

Control Type:	Signalized	Delay (sec / veh):	-
Analysis Method:	ICU 1	Level Of Service:	B
Analysis Period:	15 minutes	Volume to Capacity (v/c):	0.652

Intersection Setup

Name	Vincent Avenue			Vincent Avenue			Cypress Street			Cypress Street		
Approach	Northbound			Southbound			Eastbound			Westbound		
Lane Configuration												
Turning Movement	Left	Thru	Right	Left	Thru	Right	Left	Thru	Right	Left	Thru	Right
Lane Width [ft]	12.00	12.00	12.00	12.00	12.00	12.00	12.00	12.00	12.00	12.00	12.00	12.00
No. of Lanes in Pocket	1	0	0	1	0	0	1	0	0	1	0	0
Pocket Length [ft]	120.00	100.00	100.00	120.00	100.00	100.00	100.00	100.00	100.00	150.00	100.00	100.00
Speed [mph]	40.00			45.00			40.00			40.00		
Grade [%]	0.00			0.00			0.00			0.00		
Crosswalk	Yes			Yes			Yes			Yes		

Volumes

Name	Vincent Avenue			Vincent Avenue			Cypress Street			Cypress Street		
Base Volume Input [veh/h]	162	467	125	65	398	71	34	303	50	190	792	78
Base Volume Adjustment Factor	1.0000	1.0000	1.0000	1.0000	1.0000	1.0000	1.0000	1.0000	1.0000	1.0000	1.0000	1.0000
Heavy Vehicles Percentage [%]	2.00	2.00	2.00	2.00	2.00	2.00	2.00	2.00	2.00	2.00	2.00	2.00
Growth Rate	1.00	1.00	1.00	1.00	1.00	1.00	1.00	1.00	1.00	1.00	1.00	1.00
In-Process Volume [veh/h]	0	0	0	0	0	0	0	0	0	0	0	0
Site-Generated Trips [veh/h]	0	76	0	1	11	1	8	0	0	0	0	8
Diverted Trips [veh/h]	0	0	0	0	0	0	0	0	0	0	0	0
Pass-by Trips [veh/h]	0	0	0	0	0	0	0	0	0	0	0	0
Existing Site Adjustment Volume [veh/h]	0	0	0	0	0	0	0	0	0	0	0	0
Other Volume [veh/h]	0	0	0	0	0	0	0	0	0	0	0	0
Total Hourly Volume [veh/h]	162	543	125	66	409	72	42	303	50	190	792	86
Peak Hour Factor	1.0000	1.0000	1.0000	1.0000	1.0000	1.0000	1.0000	1.0000	1.0000	1.0000	1.0000	1.0000
Other Adjustment Factor	1.0000	1.0000	1.0000	1.0000	1.0000	1.0000	1.0000	1.0000	1.0000	1.0000	1.0000	1.0000
Total 15-Minute Volume [veh/h]	41	136	31	17	102	18	11	76	13	48	198	22
Total Analysis Volume [veh/h]	162	543	125	66	409	72	42	303	50	190	792	86
Pedestrian Volume [ped/h]	0			0			0			0		
Bicycle Volume [bicycles/h]	0			0			0			0		

Intersection Settings

Cycle Length [s]	100
Lost time [s]	10.00

Phasing & Timing

Control Type	Permiss	Permiss	Permiss	Permiss	Permiss	Permiss	Permiss	Permiss	Permiss	Permiss	Permiss	Permiss
Signal group	0	2	0	0	6	0	0	8	0	0	4	0
Auxiliary Signal Groups												
Lead / Lag	-	-	-	-	-	-	-	-	-	-	-	-

Movement, Approach, & Intersection Results

V/C, Movement V/C Ratio	0.10	0.21	0.21	0.04	0.15	0.15	0.03	0.11	0.11	0.12	0.27	0.27
Intersection LOS	B											
Intersection V/C	0.652											

Intersection Level Of Service Report

Intersection 22: Vincent Avenue (NS) at San Bernardino Road (EW)

Control Type:	Signalized	Delay (sec / veh):	-
Analysis Method:	ICU 1	Level Of Service:	B
Analysis Period:	15 minutes	Volume to Capacity (v/c):	0.653

Intersection Setup

Name	Vincent Avenue			Vincent Avenue			San Bernardino Road			San Berardino Road		
Approach	Northbound			Southbound			Eastbound			Westbound		
Lane Configuration												
Turning Movement	Left	Thru	Right	Left	Thru	Right	Left	Thru	Right	Left	Thru	Right
Lane Width [ft]	12.00	12.00	12.00	12.00	12.00	12.00	12.00	12.00	12.00	12.00	12.00	12.00
No. of Lanes in Pocket	1	0	0	1	0	0	1	0	0	1	0	0
Pocket Length [ft]	120.00	100.00	100.00	150.00	100.00	100.00	150.00	100.00	100.00	165.00	100.00	100.00
Speed [mph]	35.00			40.00			40.00			40.00		
Grade [%]	0.00			0.00			0.00			0.00		
Crosswalk	Yes			Yes			Yes			Yes		

Volumes

Name	Vincent Avenue			Vincent Avenue			San Bernardino Road			San Berardino Road		
Base Volume Input [veh/h]	106	546	50	70	556	99	82	330	67	99	597	131
Base Volume Adjustment Factor	1.0000	1.0000	1.0000	1.0000	1.0000	1.0000	1.0000	1.0000	1.0000	1.0000	1.0000	1.0000
Heavy Vehicles Percentage [%]	2.00	2.00	2.00	2.00	2.00	2.00	2.00	2.00	2.00	2.00	2.00	2.00
Growth Rate	1.00	1.00	1.00	1.00	1.00	1.00	1.00	1.00	1.00	1.00	1.00	1.00
In-Process Volume [veh/h]	0	0	0	0	0	0	0	0	0	0	0	0
Site-Generated Trips [veh/h]	0	76	0	0	11	0	0	0	0	0	0	0
Diverted Trips [veh/h]	0	0	0	0	0	0	0	0	0	0	0	0
Pass-by Trips [veh/h]	0	0	0	0	0	0	0	0	0	0	0	0
Existing Site Adjustment Volume [veh/h]	0	0	0	0	0	0	0	0	0	0	0	0
Other Volume [veh/h]	0	0	0	0	0	0	0	0	0	0	0	0
Total Hourly Volume [veh/h]	106	622	50	70	567	99	82	330	67	99	597	131
Peak Hour Factor	1.0000	1.0000	1.0000	1.0000	1.0000	1.0000	1.0000	1.0000	1.0000	1.0000	1.0000	1.0000
Other Adjustment Factor	1.0000	1.0000	1.0000	1.0000	1.0000	1.0000	1.0000	1.0000	1.0000	1.0000	1.0000	1.0000
Total 15-Minute Volume [veh/h]	27	156	13	18	142	25	21	83	17	25	149	33
Total Analysis Volume [veh/h]	106	622	50	70	567	99	82	330	67	99	597	131
Pedestrian Volume [ped/h]	0			0			0			0		
Bicycle Volume [bicycles/h]	0			0			0			0		

Intersection Settings

Cycle Length [s]	100
Lost time [s]	10.00

Phasing & Timing

Control Type	Permiss	Permiss	Permiss	Permiss	Permiss	Permiss	Protecte	Permiss	Permiss	Protecte	Permiss	Permiss
Signal group	0	2	0	0	6	0	3	8	0	7	4	0
Auxiliary Signal Groups												
Lead / Lag	-	-	-	-	-	-	Lead	-	-	Lead	-	-

Movement, Approach, & Intersection Results

V/C, Movement V/C Ratio	0.07	0.21	0.21	0.04	0.21	0.21	0.05	0.12	0.12	0.06	0.23	0.23
Intersection LOS	B											
Intersection V/C	0.653											

Intersection Level Of Service Report
Intersection 23: Vincent Avenue (NS) at Badillo Street (EW)

Control Type:	Signalized	Delay (sec / veh):	-
Analysis Method:	ICU 1	Level Of Service:	B
Analysis Period:	15 minutes	Volume to Capacity (v/c):	0.615

Intersection Setup

Name	Vincent Avenue			Vincent Avenue			Dadillo Street			Badillo Street		
Approach	Northbound			Southbound			Eastbound			Westbound		
Lane Configuration												
Turning Movement	Left	Thru	Right	Left	Thru	Right	Left	Thru	Right	Left	Thru	Right
Lane Width [ft]	12.00	12.00	12.00	12.00	12.00	12.00	12.00	12.00	12.00	12.00	12.00	12.00
No. of Lanes in Pocket	1	0	0	1	0	0	1	0	0	1	0	0
Pocket Length [ft]	200.00	100.00	100.00	190.00	100.00	100.00	195.00	100.00	100.00	195.00	100.00	100.00
Speed [mph]	40.00			35.00			45.00			45.00		
Grade [%]	0.00			0.00			0.00			0.00		
Crosswalk	Yes			Yes			Yes			Yes		

Volumes

Name	Vincent Avenue			Vincent Avenue			Dadillo Street			Badillo Street		
Base Volume Input [veh/h]	105	629	177	42	580	121	31	506	113	110	770	88
Base Volume Adjustment Factor	1.0000	1.0000	1.0000	1.0000	1.0000	1.0000	1.0000	1.0000	1.0000	1.0000	1.0000	1.0000
Heavy Vehicles Percentage [%]	2.00	2.00	2.00	2.00	2.00	2.00	2.00	2.00	2.00	2.00	2.00	2.00
Growth Rate	1.00	1.00	1.00	1.00	1.00	1.00	1.00	1.00	1.00	1.00	1.00	1.00
In-Process Volume [veh/h]	0	0	0	0	0	0	0	0	0	0	0	0
Site-Generated Trips [veh/h]	0	60	0	1	9	1	8	0	0	0	0	8
Diverted Trips [veh/h]	0	0	0	0	0	0	0	0	0	0	0	0
Pass-by Trips [veh/h]	0	0	0	0	0	0	0	0	0	0	0	0
Existing Site Adjustment Volume [veh/h]	0	0	0	0	0	0	0	0	0	0	0	0
Other Volume [veh/h]	0	0	0	0	0	0	0	0	0	0	0	0
Total Hourly Volume [veh/h]	105	689	177	43	589	122	39	506	113	110	770	96
Peak Hour Factor	1.0000	1.0000	1.0000	1.0000	1.0000	1.0000	1.0000	1.0000	1.0000	1.0000	1.0000	1.0000
Other Adjustment Factor	1.0000	1.0000	1.0000	1.0000	1.0000	1.0000	1.0000	1.0000	1.0000	1.0000	1.0000	1.0000
Total 15-Minute Volume [veh/h]	26	172	44	11	147	31	10	127	28	28	193	24
Total Analysis Volume [veh/h]	105	689	177	43	589	122	39	506	113	110	770	96
Pedestrian Volume [ped/h]	0			0			0			0		
Bicycle Volume [bicycles/h]	0			0			0			0		

Intersection Settings

Cycle Length [s]	100
Lost time [s]	10.00

Phasing & Timing

Control Type	Protecte	Permiss	Permiss	Protecte	Permiss	Permiss	Protecte	Permiss	Permiss	Protecte	Permiss	Permiss
Signal group	5	2	0	1	6	0	3	8	0	7	4	0
Auxiliary Signal Groups												
Lead / Lag	Lead	-	-	Lead	-	-	Lead	-	-	Lead	-	-

Movement, Approach, & Intersection Results

V/C, Movement V/C Ratio	0.07	0.22	0.11	0.03	0.18	0.08	0.02	0.16	0.07	0.07	0.24	0.06
Intersection LOS	B											
Intersection V/C	0.615											

Intersection Level Of Service Report
Intersection 24: Vincent Avenue (NS) at Puente Avenue (EW)

Control Type:	Signalized	Delay (sec / veh):	-
Analysis Method:	ICU 1	Level Of Service:	A
Analysis Period:	15 minutes	Volume to Capacity (v/c):	0.594

Intersection Setup

Name	Vincent Avenue			Vincent Avenue			Puente Avenue			Puente Avenue		
Approach	Northbound			Southbound			Eastbound			Westbound		
Lane Configuration												
Turning Movement	Left	Thru	Right	Left	Thru	Right	Left	Thru	Right	Left	Thru	Right
Lane Width [ft]	12.00	12.00	12.00	12.00	12.00	12.00	12.00	12.00	12.00	12.00	12.00	12.00
No. of Lanes in Pocket	1	0	0	1	0	0	0	0	0	0	0	0
Pocket Length [ft]	195.00	100.00	100.00	195.00	100.00	100.00	100.00	100.00	100.00	100.00	100.00	100.00
Speed [mph]	40.00			40.00			40.00			40.00		
Grade [%]	0.00			0.00			0.00			0.00		
Crosswalk	Yes			Yes			Yes			Yes		

Volumes

Name	Vincent Avenue			Vincent Avenue			Puente Avenue			Puente Avenue		
Base Volume Input [veh/h]	67	687	31	57	660	69	42	349	66	74	563	96
Base Volume Adjustment Factor	1.0000	1.0000	1.0000	1.0000	1.0000	1.0000	1.0000	1.0000	1.0000	1.0000	1.0000	1.0000
Heavy Vehicles Percentage [%]	2.00	2.00	2.00	2.00	2.00	2.00	2.00	2.00	2.00	2.00	2.00	2.00
Growth Rate	1.00	1.00	1.00	1.00	1.00	1.00	1.00	1.00	1.00	1.00	1.00	1.00
In-Process Volume [veh/h]	0	0	0	0	0	0	0	0	0	0	0	0
Site-Generated Trips [veh/h]	0	60	0	0	9	0	0	0	0	0	0	0
Diverted Trips [veh/h]	0	0	0	0	0	0	0	0	0	0	0	0
Pass-by Trips [veh/h]	0	0	0	0	0	0	0	0	0	0	0	0
Existing Site Adjustment Volume [veh/h]	0	0	0	0	0	0	0	0	0	0	0	0
Other Volume [veh/h]	0	0	0	0	0	0	0	0	0	0	0	0
Total Hourly Volume [veh/h]	67	747	31	57	669	69	42	349	66	74	563	96
Peak Hour Factor	1.0000	1.0000	1.0000	1.0000	1.0000	1.0000	1.0000	1.0000	1.0000	1.0000	1.0000	1.0000
Other Adjustment Factor	1.0000	1.0000	1.0000	1.0000	1.0000	1.0000	1.0000	1.0000	1.0000	1.0000	1.0000	1.0000
Total 15-Minute Volume [veh/h]	17	187	8	14	167	17	11	87	17	19	141	24
Total Analysis Volume [veh/h]	67	747	31	57	669	69	42	349	66	74	563	96
Pedestrian Volume [ped/h]	0			0			0			0		
Bicycle Volume [bicycles/h]	0			0			0			0		

Intersection Settings

Cycle Length [s]	100
Lost time [s]	10.00

Phasing & Timing

Control Type	Permiss	Permiss	Permiss	Permiss	Permiss	Permiss	Permiss	Permiss	Permiss	Permiss	Permiss	Permiss
Signal group	0	2	0	0	6	0	0	8	0	0	4	0
Auxiliary Signal Groups												
Lead / Lag	-	-	-	-	-	-	-	-	-	-	-	-

Movement, Approach, & Intersection Results

V/C, Movement V/C Ratio	0.04	0.23	0.02	0.04	0.21	0.04	0.03	0.12	0.04	0.05	0.20	0.06
Intersection LOS	A											
Intersection V/C	0.594											

Intersection Level Of Service Report

Intersection 25: Vincent Avenue (NS) at Rowland Avenue (EW)

Control Type:	Signalized	Delay (sec / veh):	-
Analysis Method:	ICU 1	Level Of Service:	A
Analysis Period:	15 minutes	Volume to Capacity (v/c):	0.542

Intersection Setup

Name	Vincent Avenue			Vincent Avenue			Rowland Avenue			Rowland Avenue		
Approach	Northbound			Southbound			Eastbound			Westbound		
Lane Configuration												
Turning Movement	Left	Thru	Right	Left	Thru	Right	Left	Thru	Right	Left	Thru	Right
Lane Width [ft]	12.00	12.00	12.00	12.00	12.00	12.00	12.00	12.00	12.00	12.00	12.00	12.00
No. of Lanes in Pocket	1	0	0	1	0	0	0	0	0	0	0	0
Pocket Length [ft]	145.00	100.00	100.00	125.00	100.00	100.00	100.00	100.00	100.00	100.00	100.00	100.00
Speed [mph]	35.00			40.00			35.00			35.00		
Grade [%]	0.00			0.00			0.00			0.00		
Crosswalk	Yes			Yes			Yes			Yes		

Volumes

Name	Vincent Avenue			Vincent Avenue			Rowland Avenue			Rowland Avenue		
Base Volume Input [veh/h]	34	712	55	36	756	12	32	133	41	119	131	62
Base Volume Adjustment Factor	1.0000	1.0000	1.0000	1.0000	1.0000	1.0000	1.0000	1.0000	1.0000	1.0000	1.0000	1.0000
Heavy Vehicles Percentage [%]	2.00	2.00	2.00	2.00	2.00	2.00	2.00	2.00	2.00	2.00	2.00	2.00
Growth Rate	1.00	1.00	1.00	1.00	1.00	1.00	1.00	1.00	1.00	1.00	1.00	1.00
In-Process Volume [veh/h]	0	0	0	0	0	0	0	0	0	0	0	0
Site-Generated Trips [veh/h]	0	50	0	1	7	1	5	0	0	0	0	5
Diverted Trips [veh/h]	0	0	0	0	0	0	0	0	0	0	0	0
Pass-by Trips [veh/h]	0	0	0	0	0	0	0	0	0	0	0	0
Existing Site Adjustment Volume [veh/h]	0	0	0	0	0	0	0	0	0	0	0	0
Other Volume [veh/h]	0	0	0	0	0	0	0	0	0	0	0	0
Total Hourly Volume [veh/h]	34	762	55	37	763	13	37	133	41	119	131	67
Peak Hour Factor	1.0000	1.0000	1.0000	1.0000	1.0000	1.0000	1.0000	1.0000	1.0000	1.0000	1.0000	1.0000
Other Adjustment Factor	1.0000	1.0000	1.0000	1.0000	1.0000	1.0000	1.0000	1.0000	1.0000	1.0000	1.0000	1.0000
Total 15-Minute Volume [veh/h]	9	191	14	9	191	3	9	33	10	30	33	17
Total Analysis Volume [veh/h]	34	762	55	37	763	13	37	133	41	119	131	67
Pedestrian Volume [ped/h]	0			0			0			0		
Bicycle Volume [bicycles/h]	0			0			0			0		

Intersection Settings

Cycle Length [s]	100
Lost time [s]	10.00

Phasing & Timing

Control Type	Protecte	Permiss	Permiss	Protecte	Permiss	Permiss	Permiss	Permiss	Permiss	Permiss	Permiss	Permiss
Signal group	5	2	0	1	6	0	0	8	0	0	4	0
Auxiliary Signal Groups												
Lead / Lag	Lead	-	-	Lead	-	-	-	-	-	-	-	-

Movement, Approach, & Intersection Results

V/C, Movement V/C Ratio	0.02	0.24	0.03	0.02	0.24	0.01	0.02	0.11	0.03	0.07	0.16	0.04
Intersection LOS	A											
Intersection V/C	0.542											

Intersection Level Of Service Report
Intersection 26: Vincent Avenue (NS) at Workman Avenue (EW)

Control Type:	Signalized	Delay (sec / veh):	-
Analysis Method:	ICU 1	Level Of Service:	B
Analysis Period:	15 minutes	Volume to Capacity (v/c):	0.612

Intersection Setup

Name	Vincent Avenue			Vincent Avenue			Workman Avenue			Workman Avenue		
Approach	Northbound			Southbound			Eastbound			Westbound		
Lane Configuration												
Turning Movement	Left	Thru	Right	Left	Thru	Right	Left	Thru	Right	Left	Thru	Right
Lane Width [ft]	12.00	12.00	12.00	12.00	12.00	12.00	12.00	12.00	12.00	12.00	12.00	12.00
No. of Lanes in Pocket	1	0	0	1	0	0	0	0	0	0	0	0
Pocket Length [ft]	120.00	100.00	100.00	180.00	100.00	100.00	100.00	100.00	100.00	100.00	100.00	100.00
Speed [mph]	35.00			40.00			35.00			35.00		
Grade [%]	0.00			0.00			0.00			0.00		
Crosswalk	Yes			Yes			Yes			Yes		

Volumes

Name	Vincent Avenue			Vincent Avenue			Workman Avenue			Workman Avenue		
Base Volume Input [veh/h]	67	675	110	42	816	61	21	137	49	131	188	74
Base Volume Adjustment Factor	1.0000	1.0000	1.0000	1.0000	1.0000	1.0000	1.0000	1.0000	1.0000	1.0000	1.0000	1.0000
Heavy Vehicles Percentage [%]	2.00	2.00	2.00	2.00	2.00	2.00	2.00	2.00	2.00	2.00	2.00	2.00
Growth Rate	1.00	1.00	1.00	1.00	1.00	1.00	1.00	1.00	1.00	1.00	1.00	1.00
In-Process Volume [veh/h]	0	0	0	0	0	0	0	0	0	0	0	0
Site-Generated Trips [veh/h]	0	50	0	0	7	0	0	0	0	0	0	0
Diverted Trips [veh/h]	0	0	0	0	0	0	0	0	0	0	0	0
Pass-by Trips [veh/h]	0	0	0	0	0	0	0	0	0	0	0	0
Existing Site Adjustment Volume [veh/h]	0	0	0	0	0	0	0	0	0	0	0	0
Other Volume [veh/h]	0	0	0	0	0	0	0	0	0	0	0	0
Total Hourly Volume [veh/h]	67	725	110	42	823	61	21	137	49	131	188	74
Peak Hour Factor	1.0000	1.0000	1.0000	1.0000	1.0000	1.0000	1.0000	1.0000	1.0000	1.0000	1.0000	1.0000
Other Adjustment Factor	1.0000	1.0000	1.0000	1.0000	1.0000	1.0000	1.0000	1.0000	1.0000	1.0000	1.0000	1.0000
Total 15-Minute Volume [veh/h]	17	181	28	11	206	15	5	34	12	33	47	19
Total Analysis Volume [veh/h]	67	725	110	42	823	61	21	137	49	131	188	74
Pedestrian Volume [ped/h]	0			0			0			0		
Bicycle Volume [bicycles/h]	0			0			0			0		

Intersection Settings

Cycle Length [s]	100
Lost time [s]	10.00

Phasing & Timing

Control Type	Protecte	Permiss	Permiss	Protecte	Permiss	Permiss	Permiss	Permiss	Permiss	Permiss	Permiss	Permiss
Signal group	5	2	0	1	6	0	0	8	0	0	4	0
Auxiliary Signal Groups												
Lead / Lag	Lead	-	-	Lead	-	-	-	-	-	-	-	-

Movement, Approach, & Intersection Results

V/C, Movement V/C Ratio	0.04	0.23	0.07	0.03	0.26	0.04	0.01	0.10	0.03	0.08	0.20	0.05
Intersection LOS	B											
Intersection V/C	0.612											

Intersection Level Of Service Report
Intersection 27: Vincent Avenue (NS) at I-10 WB Ramps (EW)

Control Type:	Signalized	Delay (sec / veh):	-
Analysis Method:	ICU 1	Level Of Service:	A
Analysis Period:	15 minutes	Volume to Capacity (v/c):	0.455

Intersection Setup

Name	Vincent Avenue		Vincent Avenue		I-10 WB Ramps	
Approach	Northbound		Southbound		Westbound	
Lane Configuration						
Turning Movement	Thru	Right	Left	Thru	Left	Right
Lane Width [ft]	12.00	12.00	12.00	12.00	12.00	12.00
No. of Lanes in Pocket	0	0	0	0	0	1
Pocket Length [ft]	100.00	100.00	100.00	100.00	100.00	220.00
Speed [mph]	35.00		35.00		35.00	
Grade [%]	0.00		0.00		0.00	
Crosswalk	No		No		Yes	

Volumes

Name	Vincent Avenue		Vincent Avenue		I-10 WB Ramps	
Base Volume Input [veh/h]	741	0	0	1011	393	194
Base Volume Adjustment Factor	1.0000	1.0000	1.0000	1.0000	1.0000	1.0000
Heavy Vehicles Percentage [%]	2.00	2.00	2.00	2.00	2.00	2.00
Growth Rate	1.00	1.00	1.00	1.00	1.00	1.00
In-Process Volume [veh/h]	0	0	0	0	0	0
Site-Generated Trips [veh/h]	16	0	0	7	0	34
Diverted Trips [veh/h]	0	0	0	0	0	0
Pass-by Trips [veh/h]	0	0	0	0	0	0
Existing Site Adjustment Volume [veh/h]	0	0	0	0	0	0
Other Volume [veh/h]	0	0	0	0	0	0
Total Hourly Volume [veh/h]	757	0	0	1018	393	228
Peak Hour Factor	1.0000	1.0000	1.0000	1.0000	1.0000	1.0000
Other Adjustment Factor	1.0000	1.0000	1.0000	1.0000	1.0000	1.0000
Total 15-Minute Volume [veh/h]	189	0	0	255	98	57
Total Analysis Volume [veh/h]	757	0	0	1018	393	228
Pedestrian Volume [ped/h]	0		0		0	
Bicycle Volume [bicycles/h]	0		0		0	

Intersection Settings

Cycle Length [s]	100
Lost time [s]	10.00

Phasing & Timing

Control Type	Permissive	Permissive	Permissive	Permissive	Split	Split
Signal group	2	0	0	6	7	0
Auxiliary Signal Groups						
Lead / Lag	-	-	-	-	Lead	-

Movement, Approach, & Intersection Results

V/C, Movement V/C Ratio	0.16	0.00	0.00	0.21	0.12	0.14
Intersection LOS	A					
Intersection V/C	0.455					

Intersection Level Of Service Report
Intersection 28: Vincent Avenue (NS) at I-10 EB Ramps (EW)

Control Type:	Signalized	Delay (sec / veh):	-
Analysis Method:	ICU 1	Level Of Service:	A
Analysis Period:	15 minutes	Volume to Capacity (v/c):	0.492

Intersection Setup

Name	Vincent Avenue			Vincent Avenue			I-10 EB Ramps			I-10 EB Ramps		
Approach	Northbound			Southbound			Eastbound			Westbound		
Lane Configuration												
Turning Movement	Left	Thru	Right	Left	Thru	Right	Left	Thru	Right	Left	Thru	Right
Lane Width [ft]	12.00	12.00	12.00	12.00	12.00	12.00	12.00	12.00	12.00	12.00	12.00	12.00
No. of Lanes in Pocket	0	0	0	0	0	0	0	0	0	0	0	0
Pocket Length [ft]	100.00	100.00	100.00	100.00	100.00	100.00	100.00	100.00	100.00	100.00	100.00	100.00
Speed [mph]	35.00			35.00			35.00			35.00		
Grade [%]	0.00			0.00			0.00			0.00		
Crosswalk	No			No			Yes			Yes		

Volumes

Name	Vincent Avenue			Vincent Avenue			I-10 EB Ramps			I-10 EB Ramps		
Base Volume Input [veh/h]	0	527	656	0	1045	358	217	0	243	0	0	0
Base Volume Adjustment Factor	1.0000	1.0000	1.0000	1.0000	1.0000	1.0000	1.0000	1.0000	1.0000	1.0000	1.0000	1.0000
Heavy Vehicles Percentage [%]	2.00	2.00	2.00	2.00	2.00	2.00	2.00	2.00	2.00	2.00	2.00	2.00
Growth Rate	1.00	1.00	1.00	1.00	1.00	1.00	1.00	1.00	1.00	1.00	1.00	1.00
In-Process Volume [veh/h]	0	0	0	0	0	0	0	0	0	0	0	0
Site-Generated Trips [veh/h]	0	0	0	1	0	4	16	0	0	0	0	0
Diverted Trips [veh/h]	0	0	0	0	0	0	0	0	0	0	0	0
Pass-by Trips [veh/h]	0	0	0	0	0	0	0	0	0	0	0	0
Existing Site Adjustment Volume [veh/h]	0	0	0	0	0	0	0	0	0	0	0	0
Other Volume [veh/h]	0	0	0	0	0	0	0	0	0	0	0	0
Total Hourly Volume [veh/h]	0	527	656	1	1045	362	233	0	243	0	0	0
Peak Hour Factor	1.0000	1.0000	1.0000	1.0000	1.0000	1.0000	1.0000	1.0000	1.0000	1.0000	1.0000	1.0000
Other Adjustment Factor	1.0000	1.0000	1.0000	1.0000	1.0000	1.0000	1.0000	1.0000	1.0000	1.0000	1.0000	1.0000
Total 15-Minute Volume [veh/h]	0	132	164	0	261	91	58	0	61	0	0	0
Total Analysis Volume [veh/h]	0	527	656	1	1045	362	233	0	243	0	0	0
Pedestrian Volume [ped/h]	0			0			0			0		
Bicycle Volume [bicycles/h]	0			0			0			0		

Intersection Settings

Cycle Length [s]	100
Lost time [s]	10.00

Phasing & Timing

Control Type	Permiss	Permiss	Permiss	Permiss	Permiss	Permiss	Split	Permiss	Split	Permiss	Permiss	Permiss
Signal group	0	2	0	0	6	0	3	0	0	0	0	0
Auxiliary Signal Groups												
Lead / Lag	-	-	-	-	-	-	Lead	-	-	-	-	-

Movement, Approach, & Intersection Results

V/C, Movement V/C Ratio	0.00	0.25	0.25	0.00	0.22	0.23	0.15	0.00	0.08	0.00	0.00	0.00
Intersection LOS	A											
Intersection V/C	0.492											

Intersection Level Of Service Report

Intersection 29: Vernon Ave/Lark Ellen Ave (NS) at Gladstone Street (EW)

Control Type:	Signalized	Delay (sec / veh):	-
Analysis Method:	ICU 1	Level Of Service:	C
Analysis Period:	15 minutes	Volume to Capacity (v/c):	0.706

Intersection Setup

Name	Lark Ellen Avenue			Vernon Avenue			Gladstone Street			Gladstone Street		
Approach	Northbound			Southbound			Eastbound			Westbound		
Lane Configuration												
Turning Movement	Left	Thru	Right	Left	Thru	Right	Left	Thru	Right	Left	Thru	Right
Lane Width [ft]	12.00	12.00	12.00	12.00	12.00	12.00	12.00	12.00	12.00	12.00	12.00	12.00
No. of Lanes in Pocket	1	0	0	1	0	0	1	0	0	1	0	0
Pocket Length [ft]	60.00	100.00	100.00	60.00	100.00	100.00	70.00	100.00	100.00	60.00	100.00	100.00
Speed [mph]	35.00			35.00			45.00			45.00		
Grade [%]	0.00			0.00			0.00			0.00		
Crosswalk	Yes			Yes			Yes			Yes		

Volumes

Name	Lark Ellen Avenue			Vernon Avenue			Gladstone Street			Gladstone Street		
Base Volume Input [veh/h]	76	423	178	23	426	88	51	198	32	150	825	39
Base Volume Adjustment Factor	1.0000	1.0000	1.0000	1.0000	1.0000	1.0000	1.0000	1.0000	1.0000	1.0000	1.0000	1.0000
Heavy Vehicles Percentage [%]	2.00	2.00	2.00	2.00	2.00	2.00	2.00	2.00	2.00	2.00	2.00	2.00
Growth Rate	1.00	1.00	1.00	1.00	1.00	1.00	1.00	1.00	1.00	1.00	1.00	1.00
In-Process Volume [veh/h]	0	0	0	0	0	0	0	0	0	0	0	0
Site-Generated Trips [veh/h]	0	0	0	0	0	30	4	10	0	0	72	0
Diverted Trips [veh/h]	0	0	0	0	0	0	0	0	0	0	0	0
Pass-by Trips [veh/h]	0	0	0	0	0	0	0	0	0	0	0	0
Existing Site Adjustment Volume [veh/h]	0	0	0	0	0	0	0	0	0	0	0	0
Other Volume [veh/h]	0	0	0	0	0	0	0	0	0	0	0	0
Total Hourly Volume [veh/h]	76	423	178	23	426	118	55	208	32	150	897	39
Peak Hour Factor	1.0000	1.0000	1.0000	1.0000	1.0000	1.0000	1.0000	1.0000	1.0000	1.0000	1.0000	1.0000
Other Adjustment Factor	1.0000	1.0000	1.0000	1.0000	1.0000	1.0000	1.0000	1.0000	1.0000	1.0000	1.0000	1.0000
Total 15-Minute Volume [veh/h]	19	106	45	6	107	30	14	52	8	38	224	10
Total Analysis Volume [veh/h]	76	423	178	23	426	118	55	208	32	150	897	39
Pedestrian Volume [ped/h]	0			0			0			0		
Bicycle Volume [bicycles/h]	0			0			0			0		

Intersection Settings

Cycle Length [s]	100
Lost time [s]	10.00

Phasing & Timing

Control Type	Permiss	Permiss	Permiss	Permiss	Permiss	Permiss	Permiss	Permiss	Permiss	Permiss	Permiss	Permiss
Signal group	0	2	0	0	6	0	0	8	0	0	4	0
Auxiliary Signal Groups												
Lead / Lag	-	-	-	-	-	-	-	-	-	-	-	-

Movement, Approach, & Intersection Results

V/C, Movement V/C Ratio	0.05	0.26	0.11	0.01	0.17	0.17	0.03	0.08	0.08	0.09	0.29	0.29
Intersection LOS	C											
Intersection V/C	0.706											

Intersection Level Of Service Report
Intersection 30: Azusa Avenue (NS) at I-210 EB Ramps (EW)

Control Type:	Signalized	Delay (sec / veh):	-
Analysis Method:	ICU 1	Level Of Service:	B
Analysis Period:	15 minutes	Volume to Capacity (v/c):	0.662

Intersection Setup

Name	Azusa Avenue		Azusa Avenue		I-210 EB Ramps	
Approach	Northbound		Southbound		Eastbound	
Lane Configuration						
Turning Movement	Left	Thru	Thru	Right	Left	Right
Lane Width [ft]	12.00	12.00	12.00	12.00	12.00	12.00
No. of Lanes in Pocket	0	0	0	0	0	0
Pocket Length [ft]	100.00	100.00	100.00	100.00	100.00	100.00
Speed [mph]	35.00		35.00		35.00	
Grade [%]	0.00		0.00		0.00	
Crosswalk	No		No		Yes	

Volumes

Name	Azusa Avenue		Azusa Avenue		I-210 EB Ramps	
Base Volume Input [veh/h]	0	1128	627	0	193	331
Base Volume Adjustment Factor	1.0000	1.0000	1.0000	1.0000	1.0000	1.0000
Heavy Vehicles Percentage [%]	2.00	2.00	2.00	2.00	2.00	2.00
Growth Rate	1.00	1.00	1.00	1.00	1.00	1.00
In-Process Volume [veh/h]	0	0	0	0	0	0
Site-Generated Trips [veh/h]	0	8	59	0	0	0
Diverted Trips [veh/h]	0	0	0	0	0	0
Pass-by Trips [veh/h]	0	0	0	0	0	0
Existing Site Adjustment Volume [veh/h]	0	0	0	0	0	0
Other Volume [veh/h]	0	0	0	0	0	0
Total Hourly Volume [veh/h]	0	1136	686	0	193	331
Peak Hour Factor	1.0000	1.0000	1.0000	1.0000	1.0000	1.0000
Other Adjustment Factor	1.0000	1.0000	1.0000	1.0000	1.0000	1.0000
Total 15-Minute Volume [veh/h]	0	284	172	0	48	83
Total Analysis Volume [veh/h]	0	1136	686	0	193	331
Pedestrian Volume [ped/h]	0		0		0	
Bicycle Volume [bicycles/h]	0		0		0	

Intersection Settings

Cycle Length [s]	100
Lost time [s]	10.00

Phasing & Timing

Control Type	Permissive	Permissive	Permissive	Permissive	Split	Split
Signal group	0	2	6	0	3	0
Auxiliary Signal Groups						
Lead / Lag	-	-	-	-	Lead	-

Movement, Approach, & Intersection Results

V/C, Movement V/C Ratio	0.00	0.36	0.21	0.00	0.06	0.21
Intersection LOS	B					
Intersection V/C	0.662					

Intersection Level Of Service Report
Intersection 31: Azusa Avenue (NS) at Paramount Street (EW)

Control Type:	Signalized	Delay (sec / veh):	-
Analysis Method:	ICU 1	Level Of Service:	B
Analysis Period:	15 minutes	Volume to Capacity (v/c):	0.606

Intersection Setup

Name	Azusa Avenue			Azusa Avenue			Paramount Street			Paramount Street		
Approach	Northbound			Southbound			Eastbound			Westbound		
Lane Configuration												
Turning Movement	Left	Thru	Right	Left	Thru	Right	Left	Thru	Right	Left	Thru	Right
Lane Width [ft]	12.00	12.00	12.00	12.00	12.00	12.00	12.00	12.00	12.00	12.00	12.00	12.00
No. of Lanes in Pocket	1	0	0	1	0	0	0	0	0	0	0	0
Pocket Length [ft]	200.00	100.00	100.00	110.00	100.00	100.00	100.00	100.00	100.00	100.00	100.00	100.00
Speed [mph]	35.00			35.00			25.00			15.00		
Grade [%]	0.00			0.00			0.00			0.00		
Crosswalk	No			Yes			Yes			Yes		

Volumes

Name	Azusa Avenue			Azusa Avenue			Paramount Street			Paramount Street		
Base Volume Input [veh/h]	127	936	0	11	819	75	162	0	79	2	0	8
Base Volume Adjustment Factor	1.0000	1.0000	1.0000	1.0000	1.0000	1.0000	1.0000	1.0000	1.0000	1.0000	1.0000	1.0000
Heavy Vehicles Percentage [%]	2.00	2.00	2.00	2.00	2.00	2.00	2.00	2.00	2.00	2.00	2.00	2.00
Growth Rate	1.00	1.00	1.00	1.00	1.00	1.00	1.00	1.00	1.00	1.00	1.00	1.00
In-Process Volume [veh/h]	0	0	0	0	0	0	0	0	0	0	0	0
Site-Generated Trips [veh/h]	0	8	0	0	59	0	0	0	0	0	0	0
Diverted Trips [veh/h]	0	0	0	0	0	0	0	0	0	0	0	0
Pass-by Trips [veh/h]	0	0	0	0	0	0	0	0	0	0	0	0
Existing Site Adjustment Volume [veh/h]	0	0	0	0	0	0	0	0	0	0	0	0
Other Volume [veh/h]	0	0	0	0	0	0	0	0	0	0	0	0
Total Hourly Volume [veh/h]	127	944	0	11	878	75	162	0	79	2	0	8
Peak Hour Factor	1.0000	1.0000	1.0000	1.0000	1.0000	1.0000	1.0000	1.0000	1.0000	1.0000	1.0000	1.0000
Other Adjustment Factor	1.0000	1.0000	1.0000	1.0000	1.0000	1.0000	1.0000	1.0000	1.0000	1.0000	1.0000	1.0000
Total 15-Minute Volume [veh/h]	32	236	0	3	220	19	41	0	20	1	0	2
Total Analysis Volume [veh/h]	127	944	0	11	878	75	162	0	79	2	0	8
Pedestrian Volume [ped/h]	0			0			0			0		
Bicycle Volume [bicycles/h]	0			0			0			0		

Intersection Settings

Cycle Length [s]	100
Lost time [s]	10.00

Phasing & Timing

Control Type	Permiss	Permiss	Permiss	Permiss	Permiss	Permiss	Permiss	Permiss	Permiss	Permiss	Permiss	Permiss
Signal group	0	2	0	0	6	0	0	8	0	0	4	0
Auxiliary Signal Groups												
Lead / Lag	-	-	-	-	-	-	-	-	-	-	-	-

Movement, Approach, & Intersection Results

V/C, Movement V/C Ratio	0.08	0.30	0.00	0.01	0.27	0.05	0.10	0.00	0.15	0.00	0.00	0.01
Intersection LOS	B											
Intersection V/C	0.606											

Intersection Level Of Service Report
Intersection 32: Azusa Avenue (NS) at Gladstone Street (EW)

Control Type:	Signalized	Delay (sec / veh):	-
Analysis Method:	ICU 1	Level Of Service:	C
Analysis Period:	15 minutes	Volume to Capacity (v/c):	0.754

Intersection Setup

Name	Azusa Avenue			Azusa Avenue			Gladstone Street			Gladstone Street		
Approach	Northbound			Southbound			Eastbound			Westbound		
Lane Configuration												
Turning Movement	Left	Thru	Right	Left	Thru	Right	Left	Thru	Right	Left	Thru	Right
Lane Width [ft]	12.00	12.00	12.00	12.00	12.00	12.00	12.00	12.00	12.00	12.00	12.00	12.00
No. of Lanes in Pocket	1	0	1	2	0	0	1	0	0	1	0	0
Pocket Length [ft]	190.00	100.00	190.00	190.00	100.00	100.00	150.00	100.00	100.00	150.00	100.00	100.00
Speed [mph]	35.00			35.00			40.00			40.00		
Grade [%]	0.00			0.00			0.00			0.00		
Crosswalk	Yes			Yes			Yes			Yes		

Volumes

Name	Azusa Avenue			Azusa Avenue			Gladstone Street			Gladstone Street		
Base Volume Input [veh/h]	113	668	64	119	631	82	117	243	41	139	738	93
Base Volume Adjustment Factor	1.0000	1.0000	1.0000	1.0000	1.0000	1.0000	1.0000	1.0000	1.0000	1.0000	1.0000	1.0000
Heavy Vehicles Percentage [%]	2.00	2.00	2.00	2.00	2.00	2.00	2.00	2.00	2.00	2.00	2.00	2.00
Growth Rate	1.00	1.00	1.00	1.00	1.00	1.00	1.00	1.00	1.00	1.00	1.00	1.00
In-Process Volume [veh/h]	0	0	0	0	0	0	0	0	0	0	0	0
Site-Generated Trips [veh/h]	0	0	0	0	0	59	8	2	0	0	13	0
Diverted Trips [veh/h]	0	0	0	0	0	0	0	0	0	0	0	0
Pass-by Trips [veh/h]	0	0	0	0	0	0	0	0	0	0	0	0
Existing Site Adjustment Volume [veh/h]	0	0	0	0	0	0	0	0	0	0	0	0
Other Volume [veh/h]	0	0	0	0	0	0	0	0	0	0	0	0
Total Hourly Volume [veh/h]	113	668	64	119	631	141	125	245	41	139	751	93
Peak Hour Factor	1.0000	1.0000	1.0000	1.0000	1.0000	1.0000	1.0000	1.0000	1.0000	1.0000	1.0000	1.0000
Other Adjustment Factor	1.0000	1.0000	1.0000	1.0000	1.0000	1.0000	1.0000	1.0000	1.0000	1.0000	1.0000	1.0000
Total 15-Minute Volume [veh/h]	28	167	16	30	158	35	31	61	10	35	188	23
Total Analysis Volume [veh/h]	113	668	64	119	631	141	125	245	41	139	751	93
Pedestrian Volume [ped/h]	0			0			0			0		
Bicycle Volume [bicycles/h]	0			0			0			0		

Intersection Settings

Cycle Length [s]	100
Lost time [s]	10.00

Phasing & Timing

Control Type	Protecte	Permiss	Overlap	Protecte	Permiss	Permiss	Protecte	Permiss	Permiss	Protecte	Permiss	Permiss
Signal group	5	2	2	1	6	0	3	8	0	7	4	0
Auxiliary Signal Groups			2,7									
Lead / Lag	Lead	-	-	Lead	-	-	Lead	-	-	Lead	-	-

Movement, Approach, & Intersection Results

V/C, Movement V/C Ratio	0.07	0.21	0.00	0.04	0.24	0.24	0.08	0.09	0.09	0.09	0.26	0.26
Intersection LOS	C											
Intersection V/C	0.754											

Intersection Level Of Service Report

Intersection 33: San Gabriel Ave/Azusa Ave (NS) at 1st St (EW)

Control Type:	Signalized	Delay (sec / veh):	-
Analysis Method:	ICU 1	Level Of Service:	B
Analysis Period:	15 minutes	Volume to Capacity (v/c):	0.685

Intersection Setup

Name												
Approach	Northbound			Southbound			Eastbound			Westbound		
Lane Configuration												
Turning Movement	Left	Thru	Right	Left	Thru	Right	Left	Thru	Right	Left	Thru	Right
Lane Width [ft]	12.00	12.00	12.00	12.00	12.00	12.00	12.00	12.00	12.00	12.00	12.00	12.00
No. of Lanes in Pocket	0	0	0	0	0	0	0	0	0	0	0	0
Pocket Length [ft]	100.00	100.00	100.00	100.00	100.00	100.00	100.00	100.00	100.00	100.00	100.00	100.00
Speed [mph]	35.00			35.00			35.00			35.00		
Grade [%]	0.00			0.00			0.00			0.00		
Crosswalk	No			Yes			Yes			Yes		

Volumes

Name												
Base Volume Input [veh/h]	86	516	410	72	826	31	38	82	76	369	252	161
Base Volume Adjustment Factor	1.0000	1.0000	1.0000	1.0000	1.0000	1.0000	1.0000	1.0000	1.0000	1.0000	1.0000	1.0000
Heavy Vehicles Percentage [%]	2.00	2.00	2.00	2.00	2.00	2.00	2.00	2.00	2.00	2.00	2.00	2.00
Growth Rate	1.04	1.04	1.04	1.04	1.04	1.04	1.04	1.04	1.04	1.04	1.04	1.04
In-Process Volume [veh/h]	0	0	0	0	0	0	0	0	0	0	0	0
Site-Generated Trips [veh/h]	0	0	0	0	0	0	0	0	0	59	0	0
Diverted Trips [veh/h]	0	0	0	0	0	0	0	0	0	0	0	0
Pass-by Trips [veh/h]	0	0	0	0	0	0	0	0	0	0	0	0
Existing Site Adjustment Volume [veh/h]	0	0	0	0	0	0	0	0	0	0	0	0
Other Volume [veh/h]	0	0	0	0	0	0	0	0	0	0	0	0
Total Hourly Volume [veh/h]	89	537	426	75	859	32	40	85	79	443	262	167
Peak Hour Factor	0.9080	0.9080	0.9080	0.9080	0.9080	0.9080	0.9080	0.9080	0.9080	0.9080	0.9080	0.9080
Other Adjustment Factor	1.0000	1.0000	1.0000	1.0000	1.0000	1.0000	1.0000	1.0000	1.0000	1.0000	1.0000	1.0000
Total 15-Minute Volume [veh/h]	25	148	117	21	237	9	11	23	22	122	72	46
Total Analysis Volume [veh/h]	98	591	469	83	946	35	44	94	87	488	289	184
Pedestrian Volume [ped/h]	0			0			0			0		
Bicycle Volume [bicycles/h]	0			0			0			0		

Intersection Settings

Cycle Length [s]	100
Lost time [s]	10.00

Phasing & Timing

Control Type	Protecte	Permiss	Permiss	Protecte	Permiss	Permiss	Protecte	Permiss	Permiss	Protecte	Permiss	Permiss
Signal group	5	2	0	1	6	0	3	8	0	7	4	0
Auxiliary Signal Groups												
Lead / Lag	Lead	-	-	Lead	-	-	Lead	-	-	Lead	-	-

Movement, Approach, & Intersection Results

V/C, Movement V/C Ratio	0.06	0.18	0.29	0.05	0.30	0.02	0.03	0.06	0.05	0.15	0.15	0.15
Intersection LOS	B											
Intersection V/C	0.685											

Intersection Level Of Service Report

Intersection 34: Alameda Ave/I-210 WB Ramps NS) at 1st St (EW)

Control Type:	Signalized	Delay (sec / veh):	-
Analysis Method:	ICU 1	Level Of Service:	E
Analysis Period:	15 minutes	Volume to Capacity (v/c):	0.936

Intersection Setup

Name												
Approach	Northbound			Southbound			Eastbound			Westbound		
Lane Configuration												
Turning Movement	Left	Thru	Right	Left	Thru	Right	Left	Thru	Right	Left	Thru	Right
Lane Width [ft]	12.00	12.00	12.00	12.00	12.00	12.00	12.00	12.00	12.00	12.00	12.00	12.00
No. of Lanes in Pocket	1	0	0	1	0	1	1	0	1	1	0	1
Pocket Length [ft]	325.00	100.00	100.00	50.00	100.00	250.00	50.00	100.00	100.00	100.00	100.00	110.00
Speed [mph]	35.00			35.00			35.00			35.00		
Grade [%]	0.00			0.00			0.00			0.00		
Crosswalk	Yes			Yes			Yes			Yes		

Volumes

Name												
Base Volume Input [veh/h]	111	14	7	41	112	64	8	239	388	580	465	44
Base Volume Adjustment Factor	1.0000	1.0000	1.0000	1.0000	1.0000	1.0000	1.0000	1.0000	1.0000	1.0000	1.0000	1.0000
Heavy Vehicles Percentage [%]	2.00	2.00	2.00	2.00	2.00	2.00	2.00	2.00	2.00	2.00	2.00	2.00
Growth Rate	1.00	1.00	1.00	1.00	1.00	1.00	1.00	1.00	1.00	1.00	1.00	1.00
In-Process Volume [veh/h]	0	0	0	0	0	0	0	0	0	0	0	0
Site-Generated Trips [veh/h]	59	0	0	0	0	0	0	0	0	0	0	0
Diverted Trips [veh/h]	0	0	0	0	0	0	0	0	0	0	0	0
Pass-by Trips [veh/h]	0	0	0	0	0	0	0	0	0	0	0	0
Existing Site Adjustment Volume [veh/h]	0	0	0	0	0	0	0	0	0	0	0	0
Other Volume [veh/h]	0	0	0	0	0	0	0	0	0	0	0	0
Total Hourly Volume [veh/h]	170	14	7	41	112	64	8	239	388	580	465	44
Peak Hour Factor	0.9350	0.9350	0.9350	0.9350	0.9350	0.9350	0.9350	0.9350	0.9350	0.9350	0.9350	0.9350
Other Adjustment Factor	1.0000	1.0000	1.0000	1.0000	1.0000	1.0000	1.0000	1.0000	1.0000	1.0000	1.0000	1.0000
Total 15-Minute Volume [veh/h]	45	4	2	11	30	17	2	64	104	155	124	12
Total Analysis Volume [veh/h]	182	15	7	44	120	68	9	256	415	620	497	47
Pedestrian Volume [ped/h]	0			0			0			0		
Bicycle Volume [bicycles/h]	0			0			0			0		

Intersection Settings

Cycle Length [s]	100
Lost time [s]	10.00

Phasing & Timing

Control Type	Permiss	Permiss	Permiss	Permiss	Permiss	Permiss	Permiss	Permiss	Permiss	Permiss	Permiss	Permiss
Signal group	0	2	0	0	6	0	0	8	0	0	4	0
Auxiliary Signal Groups												
Lead / Lag	-	-	-	-	-	-	-	-	-	-	-	-

Movement, Approach, & Intersection Results

V/C, Movement V/C Ratio	0.11	0.01	0.01	0.03	0.08	0.04	0.01	0.08	0.26	0.39	0.31	0.03
Intersection LOS	E											
Intersection V/C	0.936											

Vincent Avenue Industrial Building

Vistro File: G:\...\PM.vistro
Report File: G:\...\EP PM.pdf

Scenario 2 Existing Plus Project
5/4/2020

Intersection Analysis Summary

ID	Intersection Name	Control Type	Method	Worst Mvmt	V/C	Delay (s/veh)	LOS
1	I-605 SB On Ramp (NS) at Live Oak Avenue (EW)	Signalized	ICU 1	WB Left	0.834	-	D
2	I-605 NB Ramps (NS) at Live Oak Avenue (EW)	Two-way stop	HCM 6th Edition	NB Right	1.241	149.2	F
3	Graham Road (NS) at Live Oak Avenue (EW)	Signalized	ICU 1	WB Thru	0.594	-	A
4	Rivergrade Road (NS) at Live Oak Avenue (EW)	Signalized	ICU 1	EB Thru	0.882	-	D
5	Stewart Avenue (NS) at Live Oak Avenue (EW)	Signalized	ICU 1	EB Thru	0.763	-	C
6	Baldwin Park Boulevard (NS) at Live Oak Avenue (EW)	Signalized	ICU 1	EB Thru	0.743	-	C
7	Arrow Highway (NS) at Live Oak Ave/Arrow Hwy (EW)	Signalized	ICU 1	EB Thru	0.894	-	D
8	Maine Avenue (NS) at Arrow Highway (EW)	Signalized	ICU 1	EB Thru	0.813	-	D
9	Santa Fe Dam/Azusa Canyon Road (NS) at Arrow Highway (EW)	Signalized	ICU 1	EB Thru	0.907	-	E
10	4th Street (NS) at Arrow Highway (EW)	Signalized	ICU 1	EB Thru	0.555	-	A
11	Irwindale Avenue (NS) at I-210 WB Ramps (EW)	Signalized	ICU 1	SB Thru	0.536	-	A
12	Irwindale Avenue (NS) at I-210 EB Ramps (EW)	Signalized	ICU 1	NB Thru	0.760	-	C
13	Irwindale Avenue (NS) at Jardin De Roca/Irwindale Rd (EW)	Signalized	ICU 1	NB Thru	0.700	-	C
14	Irwindale Avenue (NS) at 1st Street (EW)	Signalized	ICU 1	NB Right	0.457	-	A
15	Irwindale Avenue (NS) at Gladstone Street (EW)	Signalized	ICU 1	SB Thru	0.648	-	B
16	Irwindale Avenue (NS) at Arrow Highway (EW)	Signalized	ICU 1	EB Thru	0.763	-	C
17	Vincent Avenue (NS) at	Signalized	ICU 1	NB Right	0.903		F

17	Gladstone Street (EW)	Signalized	ICU 1	NB Right	0.903	-	E
18	Vincent Avenue (NS) at Arrow Highway (EW)	Signalized	ICU 1	EB Thru	0.858	-	D
19	Vincent Avenue (NS) at Project North Driveway (EW)	Two-way stop	HCM 6th Edition	EB Left	0.350	17.2	C
20	Vincent Avenue (NS) at Project South Driveway (EW)	Two-way stop	HCM 6th Edition	EB Left	0.297	16.1	C
21	Vincent Avenue (NS) at Cypress Street (EW)	Signalized	ICU 1	EB Thru	0.728	-	C
22	Vincent Avenue (NS) at San Bernardino Road (EW)	Signalized	ICU 1	EB Thru	0.674	-	B
23	Vincent Avenue (NS) at Badillo Street (EW)	Signalized	ICU 1	EB Thru	0.774	-	C
24	Vincent Avenue (NS) at Puente Avenue (EW)	Signalized	ICU 1	SB Thru	0.645	-	B
25	Vincent Avenue (NS) at Rowland Avenue (EW)	Signalized	ICU 1	SB Thru	0.610	-	B
26	Vincent Avenue (NS) at Workman Avenue (EW)	Signalized	ICU 1	NB Thru	0.688	-	B
27	Vincent Avenue (NS) at I-10 WB Ramps (EW)	Signalized	ICU 1	SB Thru	0.458	-	A
28	Vincent Avenue (NS) at I-10 EB Ramps (EW)	Signalized	ICU 1	NB Thru	0.538	-	A
29	Vernon Ave/Lark Ellen Ave (NS) at Gladstone Street (EW)	Signalized	ICU 1	EB Right	0.746	-	C
30	Azusa Avenue (NS) at I-210 EB Ramps (EW)	Signalized	ICU 1	NB Thru	0.670	-	B
31	Azusa Avenue (NS) at Paramount Street (EW)	Signalized	ICU 1	NB Thru	0.633	-	B
32	Azusa Avenue (NS) at Gladstone Street (EW)	Signalized	ICU 1	EB Thru	0.736	-	C
33	San Gabriel Ave/Azusa Ave (NS) at 1st St (EW)	Signalized	ICU 1	SB Thru	0.661	-	B
34	Alameda Ave/I-210 WB Ramps (NS) at 1st St (EW)	Signalized	ICU 1	NB Left	0.692	-	B

V/C, Delay, LOS: For two-way stop, these values are taken from the movement with the worst (highest) delay value. For all other control types, they are taken for the whole intersection.

Intersection Level Of Service Report
Intersection 1: I-605 SB On Ramp (NS) at Live Oak Avenue (EW)

Control Type:	Signalized	Delay (sec / veh):	-
Analysis Method:	ICU 1	Level Of Service:	D
Analysis Period:	15 minutes	Volume to Capacity (v/c):	0.834

Intersection Setup

Name	I-605 SB On Ramps				Live Oak Avenue	
Approach	Northbound		Eastbound		Westbound	
Lane Configuration						
Turning Movement	Left	Right	Thru	Right	Left	Thru
Lane Width [ft]	12.00	12.00	12.00	12.00	12.00	12.00
No. of Lanes in Pocket	0	0	0	0	1	0
Pocket Length [ft]	100.00	100.00	100.00	100.00	365.00	100.00
Speed [mph]	35.00		35.00		45.00	
Grade [%]	0.00		0.00		0.00	
Crosswalk	Yes		No		No	

Volumes

Name	I-605 SB On Ramps				Live Oak Avenue	
Base Volume Input [veh/h]	0	0	1049	1114	557	884
Base Volume Adjustment Factor	1.0000	1.0000	1.0000	0.0000	1.0000	1.0000
Heavy Vehicles Percentage [%]	2.00	2.00	2.00	2.00	2.00	2.00
Growth Rate	1.00	1.00	1.00	1.00	1.00	1.00
In-Process Volume [veh/h]	0	0	0	0	0	0
Site-Generated Trips [veh/h]	0	0	0	0	93	0
Diverted Trips [veh/h]	0	0	0	0	0	0
Pass-by Trips [veh/h]	0	0	0	0	0	0
Existing Site Adjustment Volume [veh/h]	0	0	0	0	0	0
Other Volume [veh/h]	0	0	0	0	0	0
Total Hourly Volume [veh/h]	0	0	1049	0	650	884
Peak Hour Factor	1.0000	1.0000	1.0000	1.0000	1.0000	1.0000
Other Adjustment Factor	1.0000	1.0000	1.0000	0.0000	1.0000	1.0000
Total 15-Minute Volume [veh/h]	0	0	262	0	163	221
Total Analysis Volume [veh/h]	0	0	1049	0	650	884
Pedestrian Volume [ped/h]	0		0		0	
Bicycle Volume [bicycles/h]	0		0		0	

Intersection Settings

Cycle Length [s]	100
Lost time [s]	10.00

Phasing & Timing

Control Type	Permissive	Permissive	Permissive	Permissive	Protected	Permissive
Signal group	0	0	2	0	1	6
Auxiliary Signal Groups						
Lead / Lag	-	-	-	-	Lead	-

Movement, Approach, & Intersection Results

V/C, Movement V/C Ratio	0.00	0.00	0.33	0.00	0.41	0.28
Intersection LOS	D					
Intersection V/C	0.834					

Intersection Level Of Service Report
Intersection 2: I-605 NB Ramps (NS) at Live Oak Avenue (EW)

Control Type:	Two-way stop	Delay (sec / veh):	149.2
Analysis Method:	HCM 6th Edition	Level Of Service:	F
Analysis Period:	15 minutes	Volume to Capacity (v/c):	1.241

Intersection Setup

Name	I-605 NB Ramps			I-605 NB Ramps			Live Oak Avenue			Live Oak Avenue		
Approach	Northbound			Southbound			Eastbound			Westbound		
Lane Configuration												
Turning Movement	Left	Thru	Right	Left	Thru	Right	Left	Thru	Right	Left	Thru	Right
Lane Width [ft]	12.00	12.00	12.00	12.00	12.00	12.00	12.00	12.00	12.00	12.00	12.00	12.00
No. of Lanes in Pocket	0	0	0	0	0	0	0	0	0	0	0	0
Pocket Length [ft]	100.00	100.00	100.00	100.00	100.00	100.00	100.00	100.00	100.00	100.00	100.00	100.00
Speed [mph]	35.00			35.00			45.00			45.00		
Grade [%]	0.00			0.00			0.00			0.00		
Crosswalk	Yes			Yes			No			No		

Volumes

Name	I-605 NB Ramps			I-605 NB Ramps			Live Oak Avenue			Live Oak Avenue		
Base Volume Input [veh/h]	0	0	621	0	0	523	0	1012	0	0	944	0
Base Volume Adjustment Factor	1.0000	1.0000	1.0000	1.0000	1.0000	1.0000	1.0000	1.0000	1.0000	1.0000	1.0000	1.0000
Heavy Vehicles Percentage [%]	2.00	2.00	2.00	2.00	2.00	2.00	2.00	2.00	2.00	2.00	2.00	2.00
Growth Rate	1.00	1.00	1.00	1.00	1.00	1.00	1.00	1.00	1.00	1.00	1.00	1.00
In-Process Volume [veh/h]	0	0	0	0	0	0	0	0	0	0	0	0
Site-Generated Trips [veh/h]	0	0	14	0	0	0	0	0	0	0	93	0
Diverted Trips [veh/h]	0	0	0	0	0	0	0	0	0	0	0	0
Pass-by Trips [veh/h]	0	0	0	0	0	0	0	0	0	0	0	0
Existing Site Adjustment Volume [veh/h]	0	0	0	0	0	0	0	0	0	0	0	0
Other Volume [veh/h]	0	0	0	0	0	0	0	0	0	0	0	0
Total Hourly Volume [veh/h]	0	0	635	0	0	523	0	1012	0	0	1037	0
Peak Hour Factor	1.0000	1.0000	1.0000	1.0000	1.0000	1.0000	1.0000	1.0000	1.0000	1.0000	1.0000	1.0000
Other Adjustment Factor	1.0000	1.0000	1.0000	1.0000	1.0000	1.0000	1.0000	1.0000	1.0000	1.0000	1.0000	1.0000
Total 15-Minute Volume [veh/h]	0	0	159	0	0	131	0	253	0	0	259	0
Total Analysis Volume [veh/h]	0	0	635	0	0	523	0	1012	0	0	1037	0
Pedestrian Volume [ped/h]	0			0			0			0		

Intersection Settings

Priority Scheme	Stop	Stop	Free	Free
Flared Lane				
Storage Area [veh]	0	0	0	0
Two-Stage Gap Acceptance	No	No		
Number of Storage Spaces in Median	0	0	0	0

Movement, Approach, & Intersection Results

V/C, Movement V/C Ratio	0.00	0.00	1.24	0.00	0.00	1.04	0.00	0.01	0.00	0.00	0.01	0.00
d_M, Delay for Movement [s/veh]	0.00	0.00	149.23	0.00	0.00	80.28	0.00	0.00	0.00	0.00	0.00	0.00
Movement LOS			F			F		A			A	
95th-Percentile Queue Length [veh/ln]	0.00	0.00	24.96	0.00	0.00	15.37	0.00	0.00	0.00	0.00	0.00	0.00
95th-Percentile Queue Length [ft/ln]	0.00	0.00	624.11	0.00	0.00	384.33	0.00	0.00	0.00	0.00	0.00	0.00
d_A, Approach Delay [s/veh]	149.23			80.28			0.00			0.00		
Approach LOS	F			F			A			A		
d_I, Intersection Delay [s/veh]	42.64											
Intersection LOS	F											

Intersection Level Of Service Report
Intersection 3: Graham Road (NS) at Live Oak Avenue (EW)

Control Type:	Signalized	Delay (sec / veh):	-
Analysis Method:	ICU 1	Level Of Service:	A
Analysis Period:	15 minutes	Volume to Capacity (v/c):	0.594

Intersection Setup

Name	Graham Road		Live Oak Avenue		Live Oak Avenue	
Approach	Northbound		Eastbound		Westbound	
Lane Configuration						
Turning Movement	Left	Right	Thru	Right	Left	Thru
Lane Width [ft]	12.00	12.00	12.00	12.00	12.00	12.00
No. of Lanes in Pocket	0	0	0	0	1	0
Pocket Length [ft]	100.00	100.00	100.00	100.00	205.00	100.00
Speed [mph]	35.00		45.00		45.00	
Grade [%]	0.00		0.00		0.00	
Crosswalk	Yes		No		Yes	

Volumes

Name	Graham Road		Live Oak Avenue		Live Oak Avenue	
Base Volume Input [veh/h]	38	39	578	28	14	1334
Base Volume Adjustment Factor	1.0000	1.0000	1.0000	1.0000	1.0000	1.0000
Heavy Vehicles Percentage [%]	2.00	2.00	2.00	2.00	2.00	2.00
Growth Rate	1.00	1.00	1.00	1.00	1.00	1.00
In-Process Volume [veh/h]	0	0	0	0	0	0
Site-Generated Trips [veh/h]	0	0	14	0	0	93
Diverted Trips [veh/h]	0	0	0	0	0	0
Pass-by Trips [veh/h]	0	0	0	0	0	0
Existing Site Adjustment Volume [veh/h]	0	0	0	0	0	0
Other Volume [veh/h]	0	0	0	0	0	0
Total Hourly Volume [veh/h]	38	39	592	28	14	1427
Peak Hour Factor	1.0000	1.0000	1.0000	1.0000	1.0000	1.0000
Other Adjustment Factor	1.0000	1.0000	1.0000	1.0000	1.0000	1.0000
Total 15-Minute Volume [veh/h]	10	10	148	7	4	357
Total Analysis Volume [veh/h]	38	39	592	28	14	1427
Pedestrian Volume [ped/h]	0		0		0	
Bicycle Volume [bicycles/h]	0		0		0	

Intersection Settings

Cycle Length [s]	100
Lost time [s]	10.00

Phasing & Timing

Control Type	Permissive	Permissive	Permissive	Permissive	Protected	Permissive
Signal group	5	0	8	0	7	4
Auxiliary Signal Groups						
Lead / Lag	Lead	-	-	-	Lead	-

Movement, Approach, & Intersection Results

V/C, Movement V/C Ratio	0.02	0.05	0.19	0.02	0.01	0.45
Intersection LOS	A					
Intersection V/C	0.594					

Intersection Level Of Service Report
Intersection 4: Rivergrade Road (NS) at Live Oak Avenue (EW)

Control Type:	Signalized	Delay (sec / veh):	-
Analysis Method:	ICU 1	Level Of Service:	D
Analysis Period:	15 minutes	Volume to Capacity (v/c):	0.882

Intersection Setup

Name	Rivergrade Raod			Rivergrade Road			Live Oak Avenue			Live Oak Avenue		
Approach	Northbound			Southbound			Eastbound			Westbound		
Lane Configuration												
Turning Movement	Left	Thru	Right	Left	Thru	Right	Left	Thru	Right	Left	Thru	Right
Lane Width [ft]	12.00	12.00	12.00	12.00	12.00	12.00	12.00	12.00	12.00	12.00	12.00	12.00
No. of Lanes in Pocket	1	0	0	1	0	1	1	0	0	1	0	1
Pocket Length [ft]	315.00	100.00	100.00	160.00	100.00	145.00	205.00	100.00	100.00	155.00	100.00	120.00
Speed [mph]	50.00			40.00			45.00			45.00		
Grade [%]	0.00			0.00			0.00			0.00		
Crosswalk	Yes			Yes			Yes			Yes		

Volumes

Name	Rivergrade Raod			Rivergrade Road			Live Oak Avenue			Live Oak Avenue		
Base Volume Input [veh/h]	162	193	481	25	41	54	37	1475	21	117	685	12
Base Volume Adjustment Factor	1.0000	1.0000	1.0000	1.0000	1.0000	1.0000	1.0000	1.0000	1.0000	1.0000	1.0000	1.0000
Heavy Vehicles Percentage [%]	2.00	2.00	2.00	2.00	2.00	2.00	2.00	2.00	2.00	2.00	2.00	2.00
Growth Rate	1.00	1.00	1.00	1.00	1.00	1.00	1.00	1.00	1.00	1.00	1.00	1.00
In-Process Volume [veh/h]	0	0	0	0	0	0	0	0	0	0	0	0
Site-Generated Trips [veh/h]	0	0	0	0	0	0	0	14	0	0	93	0
Diverted Trips [veh/h]	0	0	0	0	0	0	0	0	0	0	0	0
Pass-by Trips [veh/h]	0	0	0	0	0	0	0	0	0	0	0	0
Existing Site Adjustment Volume [veh/h]	0	0	0	0	0	0	0	0	0	0	0	0
Other Volume [veh/h]	0	0	0	0	0	0	0	0	0	0	0	0
Total Hourly Volume [veh/h]	162	193	481	25	41	54	37	1489	21	117	778	12
Peak Hour Factor	1.0000	1.0000	1.0000	1.0000	1.0000	1.0000	1.0000	1.0000	1.0000	1.0000	1.0000	1.0000
Other Adjustment Factor	1.0000	1.0000	1.0000	1.0000	1.0000	1.0000	1.0000	1.0000	1.0000	1.0000	1.0000	1.0000
Total 15-Minute Volume [veh/h]	41	48	120	6	10	14	9	372	5	29	195	3
Total Analysis Volume [veh/h]	162	193	481	25	41	54	37	1489	21	117	778	12
Pedestrian Volume [ped/h]	0			0			0			0		
Bicycle Volume [bicycles/h]	0			0			0			0		

Intersection Settings

Cycle Length [s]	100
Lost time [s]	10.00

Phasing & Timing

Control Type	Protecte	Permiss	Overlap	Protecte	Permiss	Permiss	Protecte	Permiss	Permiss	Protecte	Permiss	Permiss
Signal group	5	2	2	1	6	0	3	8	0	7	4	0
Auxiliary Signal Groups			2,7									
Lead / Lag	Lead	-	-	Lead	-	-	Lead	-	-	Lead	-	-

Movement, Approach, & Intersection Results

V/C, Movement V/C Ratio	0.10	0.12	0.23	0.02	0.01	0.03	0.02	0.47	0.01	0.07	0.24	0.01
Intersection LOS	D											
Intersection V/C	0.882											

Intersection Level Of Service Report
Intersection 5: Stewart Avenue (NS) at Live Oak Avenue (EW)

Control Type:	Signalized	Delay (sec / veh):	-
Analysis Method:	ICU 1	Level Of Service:	C
Analysis Period:	15 minutes	Volume to Capacity (v/c):	0.763

Intersection Setup

Name	Stewart Avenue			Stewart Avenue			Live Oak Avenue			Live Oak Avenue		
Approach	Northbound			Southbound			Eastbound			Westbound		
Lane Configuration												
Turning Movement	Left	Thru	Right	Left	Thru	Right	Left	Thru	Right	Left	Thru	Right
Lane Width [ft]	12.00	12.00	12.00	12.00	12.00	12.00	12.00	12.00	12.00	12.00	12.00	12.00
No. of Lanes in Pocket	0	0	0	1	0	0	1	0	0	1	0	0
Pocket Length [ft]	100.00	100.00	100.00	100.00	100.00	100.00	165.00	100.00	100.00	100.00	100.00	100.00
Speed [mph]	30.00			30.00			45.00			45.00		
Grade [%]	0.00			0.00			0.00			0.00		
Crosswalk	Yes			Yes			No			Yes		

Volumes

Name	Stewart Avenue			Stewart Avenue			Live Oak Avenue			Live Oak Avenue		
Base Volume Input [veh/h]	53	27	7	32	109	7	38	1720	302	31	692	9
Base Volume Adjustment Factor	1.0000	1.0000	1.0000	1.0000	1.0000	1.0000	1.0000	1.0000	1.0000	1.0000	1.0000	1.0000
Heavy Vehicles Percentage [%]	2.00	2.00	2.00	2.00	2.00	2.00	2.00	2.00	2.00	2.00	2.00	2.00
Growth Rate	1.00	1.00	1.00	1.00	1.00	1.00	1.00	1.00	1.00	1.00	1.00	1.00
In-Process Volume [veh/h]	0	0	0	0	0	0	0	0	0	0	0	0
Site-Generated Trips [veh/h]	0	0	0	0	0	0	0	14	0	0	93	0
Diverted Trips [veh/h]	0	0	0	0	0	0	0	0	0	0	0	0
Pass-by Trips [veh/h]	0	0	0	0	0	0	0	0	0	0	0	0
Existing Site Adjustment Volume [veh/h]	0	0	0	0	0	0	0	0	0	0	0	0
Other Volume [veh/h]	0	0	0	0	0	0	0	0	0	0	0	0
Total Hourly Volume [veh/h]	53	27	7	32	109	7	38	1734	302	31	785	9
Peak Hour Factor	1.0000	1.0000	1.0000	1.0000	1.0000	1.0000	1.0000	1.0000	1.0000	1.0000	1.0000	1.0000
Other Adjustment Factor	1.0000	1.0000	1.0000	1.0000	1.0000	1.0000	1.0000	1.0000	1.0000	1.0000	1.0000	1.0000
Total 15-Minute Volume [veh/h]	13	7	2	8	27	2	10	434	76	8	196	2
Total Analysis Volume [veh/h]	53	27	7	32	109	7	38	1734	302	31	785	9
Pedestrian Volume [ped/h]	0			0			0			0		
Bicycle Volume [bicycles/h]	0			0			0			0		

Intersection Settings

Cycle Length [s]	100
Lost time [s]	10.00

Phasing & Timing

Control Type	Permiss	Permiss	Permiss	Permiss	Permiss	Permiss	Permiss	Permiss	Permiss	Permiss	Permiss	Permiss
Signal group	0	2	0	0	6	0	0	8	0	0	4	0
Auxiliary Signal Groups												
Lead / Lag	-	-	-	-	-	-	-	-	-	-	-	-

Movement, Approach, & Intersection Results

V/C, Movement V/C Ratio	0.03	0.05	0.05	0.02	0.07	0.00	0.02	0.54	0.19	0.02	0.25	0.01
Intersection LOS	C											
Intersection V/C	0.763											

Intersection Level Of Service Report
Intersection 6: Baldwin Park Boulevard (NS) at Live Oak Avenue (EW)

Control Type:	Signalized	Delay (sec / veh):	-
Analysis Method:	ICU 1	Level Of Service:	C
Analysis Period:	15 minutes	Volume to Capacity (v/c):	0.743

Intersection Setup

Name	Baldwin Park Boulevard		Live Oak Avenue		Live Oak Avenue	
Approach	Northbound		Eastbound		Westbound	
Lane Configuration						
Turning Movement	Left	Right	Thru	Right	Left	Thru
Lane Width [ft]	12.00	12.00	12.00	12.00	12.00	12.00
No. of Lanes in Pocket	1	0	0	0	1	0
Pocket Length [ft]	100.00	100.00	100.00	100.00	200.00	100.00
Speed [mph]	40.00		45.00		45.00	
Grade [%]	0.00		0.00		0.00	
Crosswalk	Yes		No		No	

Volumes

Name	Baldwin Park Boulevard		Live Oak Avenue		Live Oak Avenue	
Base Volume Input [veh/h]	77	94	1259	623	280	623
Base Volume Adjustment Factor	1.0000	1.0000	1.0000	1.0000	1.0000	1.0000
Heavy Vehicles Percentage [%]	2.00	2.00	2.00	2.00	2.00	2.00
Growth Rate	1.00	1.00	1.00	1.00	1.00	1.00
In-Process Volume [veh/h]	0	0	0	0	0	0
Site-Generated Trips [veh/h]	0	1	14	0	7	93
Diverted Trips [veh/h]	0	0	0	0	0	0
Pass-by Trips [veh/h]	0	0	0	0	0	0
Existing Site Adjustment Volume [veh/h]	0	0	0	0	0	0
Other Volume [veh/h]	0	0	0	0	0	0
Total Hourly Volume [veh/h]	77	95	1273	623	287	716
Peak Hour Factor	1.0000	1.0000	1.0000	1.0000	1.0000	1.0000
Other Adjustment Factor	1.0000	1.0000	1.0000	1.0000	1.0000	1.0000
Total 15-Minute Volume [veh/h]	19	24	318	156	72	179
Total Analysis Volume [veh/h]	77	95	1273	623	287	716
Pedestrian Volume [ped/h]	0		0		0	
Bicycle Volume [bicycles/h]	0		0		0	

Intersection Settings

Cycle Length [s]	100
Lost time [s]	10.00

Phasing & Timing

Control Type	Permissive	Permissive	Permissive	Permissive	Protected	Permissive
Signal group	5	0	8	0	7	4
Auxiliary Signal Groups						
Lead / Lag	Lead	-	-	-	Lead	-

Movement, Approach, & Intersection Results

V/C, Movement V/C Ratio	0.02	0.07	0.40	0.39	0.18	0.22
Intersection LOS	C					
Intersection V/C	0.743					

Intersection Level Of Service Report
Intersection 7: Arrow Highway (NS) at Live Oak Ave/Arrow Hwy (EW)

Control Type:	Signalized	Delay (sec / veh):	-
Analysis Method:	ICU 1	Level Of Service:	D
Analysis Period:	15 minutes	Volume to Capacity (v/c):	0.894

Intersection Setup

Name			Live Oak Avenue		Arrow Highway	
Approach	Southbound		Eastbound		Westbound	
Lane Configuration						
Turning Movement	Left	Right	Left	Thru	Thru	Right
Lane Width [ft]	12.00	12.00	12.00	12.00	12.00	12.00
No. of Lanes in Pocket	0	0	1	0	0	0
Pocket Length [ft]	100.00	100.00	160.00	100.00	100.00	100.00
Speed [mph]	35.00		45.00		45.00	
Grade [%]	0.00		0.00		0.00	
Crosswalk	No		Yes		No	

Volumes

Name			Live Oak Avenue		Arrow Highway	
Base Volume Input [veh/h]	1077	131	41	1326	1117	451
Base Volume Adjustment Factor	1.0000	1.0000	1.0000	1.0000	1.0000	1.0000
Heavy Vehicles Percentage [%]	2.00	2.00	2.00	2.00	2.00	2.00
Growth Rate	1.00	1.00	1.00	1.00	1.00	1.00
In-Process Volume [veh/h]	0	0	0	0	0	0
Site-Generated Trips [veh/h]	2	0	0	15	100	12
Diverted Trips [veh/h]	0	0	0	0	0	0
Pass-by Trips [veh/h]	0	0	0	0	0	0
Existing Site Adjustment Volume [veh/h]	0	0	0	0	0	0
Other Volume [veh/h]	0	0	0	0	0	0
Total Hourly Volume [veh/h]	1079	131	41	1341	1217	463
Peak Hour Factor	1.0000	1.0000	1.0000	1.0000	1.0000	1.0000
Other Adjustment Factor	1.0000	1.0000	1.0000	1.0000	1.0000	1.0000
Total 15-Minute Volume [veh/h]	270	33	10	335	304	116
Total Analysis Volume [veh/h]	1079	131	41	1341	1217	463
Pedestrian Volume [ped/h]	0		0		0	
Bicycle Volume [bicycles/h]	0		0		0	

Intersection Settings

Cycle Length [s]	100
Lost time [s]	10.00

Phasing & Timing

Control Type	Permissive	Permissive	Permissive	Permissive	Permissive	Unsignalized
Signal group	1	0	0	8	4	0
Auxiliary Signal Groups						
Lead / Lag	Lead	-	-	-	-	-

Movement, Approach, & Intersection Results

V/C, Movement V/C Ratio	0.34	0.08	0.03	0.42	0.38	0.00
Intersection LOS	D					
Intersection V/C	0.894					

Intersection Level Of Service Report
Intersection 8: Maine Avenue (NS) at Arrow Highway (EW)

Control Type:	Signalized	Delay (sec / veh):	-
Analysis Method:	ICU 1	Level Of Service:	D
Analysis Period:	15 minutes	Volume to Capacity (v/c):	0.813

Intersection Setup

Name	Maine Avenue		Arrow Highway		Arrow Highway	
Approach	Northbound		Eastbound		Westbound	
Lane Configuration						
Turning Movement	Left	Right	Thru	Right	Left	Thru
Lane Width [ft]	12.00	12.00	12.00	12.00	12.00	12.00
No. of Lanes in Pocket	0	1	0	0	1	0
Pocket Length [ft]	100.00	50.00	100.00	100.00	80.00	100.00
Speed [mph]	35.00		45.00		45.00	
Grade [%]	0.00		0.00		0.00	
Crosswalk	Yes		No		Yes	

Volumes

Name	Maine Avenue		Arrow Highway		Arrow Highway	
Base Volume Input [veh/h]	247	57	1849	555	70	1046
Base Volume Adjustment Factor	1.0000	1.0000	1.0000	1.0000	1.0000	1.0000
Heavy Vehicles Percentage [%]	2.00	2.00	2.00	2.00	2.00	2.00
Growth Rate	1.00	1.00	1.00	1.00	1.00	1.00
In-Process Volume [veh/h]	0	0	0	0	0	0
Site-Generated Trips [veh/h]	0	0	17	0	0	112
Diverted Trips [veh/h]	0	0	0	0	0	0
Pass-by Trips [veh/h]	0	0	0	0	0	0
Existing Site Adjustment Volume [veh/h]	0	0	0	0	0	0
Other Volume [veh/h]	0	0	0	0	0	0
Total Hourly Volume [veh/h]	247	57	1866	555	70	1158
Peak Hour Factor	1.0000	1.0000	1.0000	1.0000	1.0000	1.0000
Other Adjustment Factor	1.0000	1.0000	1.0000	1.0000	1.0000	1.0000
Total 15-Minute Volume [veh/h]	62	14	467	139	18	290
Total Analysis Volume [veh/h]	247	57	1866	555	70	1158
Pedestrian Volume [ped/h]	0		0		0	
Bicycle Volume [bicycles/h]	0		0		0	

Intersection Settings

Cycle Length [s]	100
Lost time [s]	10.00

Phasing & Timing

Control Type	Split	Split	Permissive	Permissive	Permissive	Permissive
Signal group	5	0	8	0	0	4
Auxiliary Signal Groups						
Lead / Lag	Lead	-	-	-	-	-

Movement, Approach, & Intersection Results

V/C, Movement V/C Ratio	0.08	0.04	0.58	0.35	0.04	0.24
Intersection LOS	D					
Intersection V/C	0.813					

Intersection Level Of Service Report

Intersection 9: Santa Fe Dam/Azusa Canyon Road (NS) at Arrow Highway (EW)

Control Type:	Signalized	Delay (sec / veh):	-
Analysis Method:	ICU 1	Level Of Service:	E
Analysis Period:	15 minutes	Volume to Capacity (v/c):	0.907

Intersection Setup

Name	Azusa Canyon Road						Arrow Highway			Arrow Highway		
Approach	Northbound			Southbound			Eastbound			Westbound		
Lane Configuration												
Turning Movement	Left	Thru	Right	Left	Thru	Right	Left	Thru	Right	Left	Thru	Right
Lane Width [ft]	12.00	12.00	12.00	12.00	12.00	12.00	12.00	12.00	12.00	12.00	12.00	12.00
No. of Lanes in Pocket	1	0	0	0	0	0	1	0	0	1	0	0
Pocket Length [ft]	200.00	100.00	100.00	100.00	100.00	100.00	185.00	100.00	100.00	180.00	100.00	100.00
Speed [mph]	35.00			35.00			45.00			45.00		
Grade [%]	0.00			0.00			0.00			0.00		
Crosswalk	Yes			Yes			No			Yes		

Volumes

Name	Azusa Canyon Road						Arrow Highway			Arrow Highway		
Base Volume Input [veh/h]	120	5	442	15	13	29	14	1265	59	158	967	16
Base Volume Adjustment Factor	1.0000	1.0000	1.0000	1.0000	1.0000	1.0000	1.0000	1.0000	1.0000	1.0000	1.0000	1.0000
Heavy Vehicles Percentage [%]	2.00	2.00	2.00	2.00	2.00	2.00	2.00	2.00	2.00	2.00	2.00	2.00
Growth Rate	1.00	1.00	1.00	1.00	1.00	1.00	1.00	1.00	1.00	1.00	1.00	1.00
In-Process Volume [veh/h]	0	0	0	0	0	0	0	0	0	0	0	0
Site-Generated Trips [veh/h]	0	0	1	0	0	0	0	17	0	7	112	0
Diverted Trips [veh/h]	0	0	0	0	0	0	0	0	0	0	0	0
Pass-by Trips [veh/h]	0	0	0	0	0	0	0	0	0	0	0	0
Existing Site Adjustment Volume [veh/h]	0	0	0	0	0	0	0	0	0	0	0	0
Other Volume [veh/h]	0	0	0	0	0	0	0	0	0	0	0	0
Total Hourly Volume [veh/h]	120	5	443	15	13	29	14	1282	59	165	1079	16
Peak Hour Factor	1.0000	1.0000	1.0000	1.0000	1.0000	1.0000	1.0000	1.0000	1.0000	1.0000	1.0000	1.0000
Other Adjustment Factor	1.0000	1.0000	1.0000	1.0000	1.0000	1.0000	1.0000	1.0000	1.0000	1.0000	1.0000	1.0000
Total 15-Minute Volume [veh/h]	30	1	111	4	3	7	4	321	15	41	270	4
Total Analysis Volume [veh/h]	120	5	443	15	13	29	14	1282	59	165	1079	16
Pedestrian Volume [ped/h]	0			0			0			0		
Bicycle Volume [bicycles/h]	0			0			0			0		

Intersection Settings

Cycle Length [s]	100
Lost time [s]	10.00

Phasing & Timing

Control Type	Split	Split	Split	Split	Split	Split	Protecte	Permiss	Permiss	Protecte	Permiss	Permiss
Signal group	0	2	0	0	6	0	3	8	0	7	4	0
Auxiliary Signal Groups												
Lead / Lag	-	-	-	-	-	-	Lead	-	-	Lead	-	-

Movement, Approach, & Intersection Results

V/C, Movement V/C Ratio	0.08	0.00	0.28	0.01	0.03	0.03	0.01	0.40	0.04	0.10	0.34	0.01
Intersection LOS	E											
Intersection V/C	0.907											

Intersection Level Of Service Report
Intersection 10: 4th Street (NS) at Arrow Highway (EW)

Control Type:	Signalized	Delay (sec / veh):	-
Analysis Method:	ICU 1	Level Of Service:	A
Analysis Period:	15 minutes	Volume to Capacity (v/c):	0.555

Intersection Setup

Name	4th Street			4th Street			Arrow Highway			Arrow Highway		
Approach	Northbound			Southbound			Eastbound			Westbound		
Lane Configuration												
Turning Movement	Left	Thru	Right	Left	Thru	Right	Left	Thru	Right	Left	Thru	Right
Lane Width [ft]	12.00	12.00	12.00	12.00	12.00	12.00	12.00	12.00	12.00	12.00	12.00	12.00
No. of Lanes in Pocket	1	0	0	0	0	0	1	0	1	1	0	0
Pocket Length [ft]	55.00	100.00	100.00	100.00	100.00	100.00	145.00	100.00	150.00	195.00	100.00	100.00
Speed [mph]	35.00			25.00			45.00			45.00		
Grade [%]	0.00			0.00			0.00			0.00		
Crosswalk	Yes			Yes			Yes			Yes		

Volumes

Name	4th Street			4th Street			Arrow Highway			Arrow Highway		
Base Volume Input [veh/h]	143	1	44	11	0	12	5	1758	39	41	923	2
Base Volume Adjustment Factor	1.0000	1.0000	1.0000	1.0000	1.0000	1.0000	1.0000	1.0000	1.0000	1.0000	1.0000	1.0000
Heavy Vehicles Percentage [%]	2.00	2.00	2.00	2.00	2.00	2.00	2.00	2.00	2.00	2.00	2.00	2.00
Growth Rate	1.00	1.00	1.00	1.00	1.00	1.00	1.00	1.00	1.00	1.00	1.00	1.00
In-Process Volume [veh/h]	0	0	0	0	0	0	0	0	0	0	0	0
Site-Generated Trips [veh/h]	0	0	0	0	0	0	0	18	0	0	119	0
Diverted Trips [veh/h]	0	0	0	0	0	0	0	0	0	0	0	0
Pass-by Trips [veh/h]	0	0	0	0	0	0	0	0	0	0	0	0
Existing Site Adjustment Volume [veh/h]	0	0	0	0	0	0	0	0	0	0	0	0
Other Volume [veh/h]	0	0	0	0	0	0	0	0	0	0	0	0
Total Hourly Volume [veh/h]	143	1	44	11	0	12	5	1776	39	41	1042	2
Peak Hour Factor	1.0000	1.0000	1.0000	1.0000	1.0000	1.0000	1.0000	1.0000	1.0000	1.0000	1.0000	1.0000
Other Adjustment Factor	1.0000	1.0000	1.0000	1.0000	1.0000	1.0000	1.0000	1.0000	1.0000	1.0000	1.0000	1.0000
Total 15-Minute Volume [veh/h]	36	0	11	3	0	3	1	444	10	10	261	1
Total Analysis Volume [veh/h]	143	1	44	11	0	12	5	1776	39	41	1042	2
Pedestrian Volume [ped/h]	0			0			0			0		
Bicycle Volume [bicycles/h]	0			0			0			0		

Intersection Settings

Cycle Length [s]	100
Lost time [s]	10.00

Phasing & Timing

Control Type	Split	Split	Split	Split	Split	Split	Protecte	Permiss	Permiss	Protecte	Permiss	Permiss
Signal group	0	2	0	0	6	0	3	8	0	7	4	0
Auxiliary Signal Groups												
Lead / Lag	-	-	-	-	-	-	Lead	-	-	Lead	-	-

Movement, Approach, & Intersection Results

V/C, Movement V/C Ratio	0.04	0.05	0.03	0.01	0.00	0.01	0.00	0.37	0.02	0.03	0.33	0.00
Intersection LOS	A											
Intersection V/C	0.555											

Intersection Level Of Service Report
Intersection 11: Irwindale Avenue (NS) at I-210 WB Ramps (EW)

Control Type:	Signalized	Delay (sec / veh):	-
Analysis Method:	ICU 1	Level Of Service:	A
Analysis Period:	15 minutes	Volume to Capacity (v/c):	0.536

Intersection Setup

Name	Irwindale Avenue				I-210 WB Ramps	
Approach	Northbound		Southbound		Westbound	
Lane Configuration						
Turning Movement	Thru	Right	Left	Thru	Left	Right
Lane Width [ft]	12.00	12.00	12.00	12.00	12.00	12.00
No. of Lanes in Pocket	0	0	0	0	0	0
Pocket Length [ft]	100.00	100.00	100.00	100.00	100.00	100.00
Speed [mph]	35.00		35.00		35.00	
Grade [%]	0.00		0.00		0.00	
Crosswalk	No		No		Yes	

Volumes

Name	Irwindale Avenue				I-210 WB Ramps	
Base Volume Input [veh/h]	793	0	0	1473	192	206
Base Volume Adjustment Factor	1.0000	1.0000	1.0000	1.0000	1.0000	1.0000
Heavy Vehicles Percentage [%]	2.00	2.00	2.00	2.00	2.00	2.00
Growth Rate	1.00	1.00	1.00	1.00	1.00	1.00
In-Process Volume [veh/h]	0	0	0	0	0	0
Site-Generated Trips [veh/h]	0	0	0	0	0	0
Diverted Trips [veh/h]	0	0	0	0	0	0
Pass-by Trips [veh/h]	0	0	0	0	0	0
Existing Site Adjustment Volume [veh/h]	0	0	0	0	0	0
Other Volume [veh/h]	0	0	0	0	0	0
Total Hourly Volume [veh/h]	793	0	0	1473	192	206
Peak Hour Factor	1.0000	1.0000	1.0000	1.0000	1.0000	1.0000
Other Adjustment Factor	1.0000	1.0000	1.0000	1.0000	1.0000	1.0000
Total 15-Minute Volume [veh/h]	198	0	0	368	48	52
Total Analysis Volume [veh/h]	793	0	0	1473	192	206
Pedestrian Volume [ped/h]	0		0		0	
Bicycle Volume [bicycles/h]	0		0		0	

Intersection Settings

Cycle Length [s]	100
Lost time [s]	10.00

Phasing & Timing

Control Type	Permissive	Permissive	Permissive	Permissive	Split	Split
Signal group	2	0	0	6	7	0
Auxiliary Signal Groups						
Lead / Lag	-	-	-	-	Lead	-

Movement, Approach, & Intersection Results

V/C, Movement V/C Ratio	0.17	0.00	0.00	0.31	0.06	0.12
Intersection LOS	A					
Intersection V/C	0.536					

Intersection Level Of Service Report
Intersection 12: Irwindale Avenue (NS) at I-210 EB Ramps (EW)

Control Type:	Signalized	Delay (sec / veh):	-
Analysis Method:	ICU 1	Level Of Service:	C
Analysis Period:	15 minutes	Volume to Capacity (v/c):	0.760

Intersection Setup

Name	Irwindale Avenue			Irwindale Avenue			I-210 EB Ramps			I-210 EB Ramps		
Approach	Northbound			Southbound			Eastbound			Westbound		
Lane Configuration												
Turning Movement	Left	Thru	Right	Left	Thru	Right	Left	Thru	Right	Left	Thru	Right
Lane Width [ft]	12.00	12.00	12.00	12.00	12.00	12.00	12.00	12.00	12.00	12.00	12.00	12.00
No. of Lanes in Pocket	0	0	1	1	0	0	0	0	0	0	0	0
Pocket Length [ft]	100.00	100.00	505.00	330.00	100.00	100.00	100.00	100.00	100.00	100.00	100.00	100.00
Speed [mph]	35.00			35.00			35.00			35.00		
Grade [%]	0.00			0.00			0.00			0.00		
Crosswalk	No			No			No			Yes		

Volumes

Name	Irwindale Avenue			Irwindale Avenue			I-210 EB Ramps			I-210 EB Ramps		
Base Volume Input [veh/h]	0	1034	336	416	792	0	375	0	456	0	0	0
Base Volume Adjustment Factor	1.0000	1.0000	1.0000	1.0000	1.0000	1.0000	1.0000	1.0000	1.0000	1.0000	1.0000	1.0000
Heavy Vehicles Percentage [%]	2.00	2.00	2.00	2.00	2.00	2.00	2.00	2.00	2.00	2.00	2.00	2.00
Growth Rate	1.00	1.00	1.00	1.00	1.00	1.00	1.00	1.00	1.00	1.00	1.00	1.00
In-Process Volume [veh/h]	0	0	0	0	0	0	0	0	0	0	0	0
Site-Generated Trips [veh/h]	0	56	0	0	0	0	0	0	8	0	0	0
Diverted Trips [veh/h]	0	0	0	0	0	0	0	0	0	0	0	0
Pass-by Trips [veh/h]	0	0	0	0	0	0	0	0	0	0	0	0
Existing Site Adjustment Volume [veh/h]	0	0	0	0	0	0	0	0	0	0	0	0
Other Volume [veh/h]	0	0	0	0	0	0	0	0	0	0	0	0
Total Hourly Volume [veh/h]	0	1090	336	416	792	0	375	0	464	0	0	0
Peak Hour Factor	1.0000	1.0000	1.0000	1.0000	1.0000	1.0000	1.0000	1.0000	1.0000	1.0000	1.0000	1.0000
Other Adjustment Factor	1.0000	1.0000	1.0000	1.0000	1.0000	1.0000	1.0000	1.0000	1.0000	1.0000	1.0000	1.0000
Total 15-Minute Volume [veh/h]	0	273	84	104	198	0	94	0	116	0	0	0
Total Analysis Volume [veh/h]	0	1090	336	416	792	0	375	0	464	0	0	0
Pedestrian Volume [ped/h]	0			0			0			0		
Bicycle Volume [bicycles/h]	0			0			0			0		

Intersection Settings

Cycle Length [s]	100
Lost time [s]	10.00

Phasing & Timing

Control Type	Permiss	Permiss	Permiss	Protecte	Permiss	Permiss	Split	Permiss	Split	Permiss	Permiss	Permiss
Signal group	0	2	0	1	6	0	3	0	0	0	0	0
Auxiliary Signal Groups												
Lead / Lag	-	-	-	Lead	-	-	Lead	-	-	-	-	-

Movement, Approach, & Intersection Results

V/C, Movement V/C Ratio	0.00	0.34	0.21	0.13	0.25	0.00	0.12	0.00	0.17	0.00	0.00	0.00
Intersection LOS	C											
Intersection V/C	0.760											

Intersection Level Of Service Report

Intersection 13: Irwindale Avenue (NS) at Jardin De Roca/Irwindale Rd (EW)

Control Type:	Signalized	Delay (sec / veh):	-
Analysis Method:	ICU 1	Level Of Service:	C
Analysis Period:	15 minutes	Volume to Capacity (v/c):	0.700

Intersection Setup

Name	Irwindale Avenue			Irwindale Avenue			Jardin De Roca			Irwindale Road		
Approach	Northbound			Southbound			Eastbound			Westbound		
Lane Configuration												
Turning Movement	Left	Thru	Right	Left	Thru	Right	Left	Thru	Right	Left	Thru	Right
Lane Width [ft]	12.00	12.00	12.00	12.00	12.00	12.00	12.00	12.00	12.00	12.00	12.00	12.00
No. of Lanes in Pocket	1	0	1	1	0	0	0	0	0	0	0	0
Pocket Length [ft]	130.00	100.00	180.00	245.00	100.00	100.00	100.00	100.00	100.00	100.00	100.00	100.00
Speed [mph]	35.00			35.00			25.00			25.00		
Grade [%]	0.00			0.00			0.00			0.00		
Crosswalk	No			No			No			Yes		

Volumes

Name	Irwindale Avenue			Irwindale Avenue			Jardin De Roca			Irwindale Road		
Base Volume Input [veh/h]	28	1163	42	35	1205	7	25	0	80	113	0	178
Base Volume Adjustment Factor	1.0000	1.0000	1.0000	1.0000	1.0000	1.0000	1.0000	1.0000	1.0000	1.0000	1.0000	1.0000
Heavy Vehicles Percentage [%]	2.00	2.00	2.00	2.00	2.00	2.00	2.00	2.00	2.00	2.00	2.00	2.00
Growth Rate	1.00	1.00	1.00	1.00	1.00	1.00	1.00	1.00	1.00	1.00	1.00	1.00
In-Process Volume [veh/h]	0	0	0	0	0	0	0	0	0	0	0	0
Site-Generated Trips [veh/h]	0	56	0	0	8	0	0	0	0	0	0	0
Diverted Trips [veh/h]	0	0	0	0	0	0	0	0	0	0	0	0
Pass-by Trips [veh/h]	0	0	0	0	0	0	0	0	0	0	0	0
Existing Site Adjustment Volume [veh/h]	0	0	0	0	0	0	0	0	0	0	0	0
Other Volume [veh/h]	0	0	0	0	0	0	0	0	0	0	0	0
Total Hourly Volume [veh/h]	28	1219	42	35	1213	7	25	0	80	113	0	178
Peak Hour Factor	1.0000	1.0000	1.0000	1.0000	1.0000	1.0000	1.0000	1.0000	1.0000	1.0000	1.0000	1.0000
Other Adjustment Factor	1.0000	1.0000	1.0000	1.0000	1.0000	1.0000	1.0000	1.0000	1.0000	1.0000	1.0000	1.0000
Total 15-Minute Volume [veh/h]	7	305	11	9	303	2	6	0	20	28	0	45
Total Analysis Volume [veh/h]	28	1219	42	35	1213	7	25	0	80	113	0	178
Pedestrian Volume [ped/h]	0			0			0			0		
Bicycle Volume [bicycles/h]	0			0			0			0		

Intersection Settings

Cycle Length [s]	100
Lost time [s]	10.00

Phasing & Timing

Control Type	Protecte	Permiss	Permiss	Protecte	Permiss	Permiss	Permiss	Permiss	Permiss	Permiss	Permiss	Permiss
Signal group	5	2	0	1	6	0	3	0	0	7	0	0
Auxiliary Signal Groups												
Lead / Lag	Lead	-	-	Lead	-	-	Lead	-	-	Lead	-	-

Movement, Approach, & Intersection Results

V/C, Movement V/C Ratio	0.02	0.38	0.03	0.02	0.38	0.00	0.02	0.00	0.07	0.07	0.00	0.28
Intersection LOS	C											
Intersection V/C	0.700											

Intersection Level Of Service Report
Intersection 14: Irwindale Avenue (NS) at 1st Street (EW)

Control Type:	Signalized	Delay (sec / veh):	-
Analysis Method:	ICU 1	Level Of Service:	A
Analysis Period:	15 minutes	Volume to Capacity (v/c):	0.457

Intersection Setup

Name	Irwindale Avenue			Irwindale Avenue			1st Street			1st Street		
Approach	Northbound			Southbound			Eastbound			Westbound		
Lane Configuration												
Turning Movement	Left	Thru	Right	Left	Thru	Right	Left	Thru	Right	Left	Thru	Right
Lane Width [ft]	12.00	12.00	12.00	12.00	12.00	12.00	12.00	12.00	12.00	12.00	12.00	12.00
No. of Lanes in Pocket	1	0	1	1	0	1	1	0	1	1	0	1
Pocket Length [ft]	100.00	100.00	70.00	120.00	100.00	240.00	90.00	100.00	95.00	75.00	100.00	75.00
Speed [mph]	35.00			35.00			35.00			25.00		
Grade [%]	0.00			0.00			0.00			0.00		
Crosswalk	Yes			No			Yes			Yes		

Volumes

Name	Irwindale Avenue			Irwindale Avenue			1st Street			1st Street		
Base Volume Input [veh/h]	11	878	4	9	1337	53	167	0	43	10	0	6
Base Volume Adjustment Factor	1.0000	1.0000	1.0000	1.0000	1.0000	1.0000	1.0000	1.0000	1.0000	1.0000	1.0000	1.0000
Heavy Vehicles Percentage [%]	2.00	2.00	2.00	2.00	2.00	2.00	2.00	2.00	2.00	2.00	2.00	2.00
Growth Rate	1.00	1.00	1.00	1.00	1.00	1.00	1.00	1.00	1.00	1.00	1.00	1.00
In-Process Volume [veh/h]	0	0	0	0	0	0	0	0	0	0	0	0
Site-Generated Trips [veh/h]	0	56	0	0	8	0	0	0	0	0	0	0
Diverted Trips [veh/h]	0	0	0	0	0	0	0	0	0	0	0	0
Pass-by Trips [veh/h]	0	0	0	0	0	0	0	0	0	0	0	0
Existing Site Adjustment Volume [veh/h]	0	0	0	0	0	0	0	0	0	0	0	0
Other Volume [veh/h]	0	0	0	0	0	0	0	0	0	0	0	0
Total Hourly Volume [veh/h]	11	934	4	9	1345	53	167	0	43	10	0	6
Peak Hour Factor	1.0000	1.0000	1.0000	1.0000	1.0000	1.0000	1.0000	1.0000	1.0000	1.0000	1.0000	1.0000
Other Adjustment Factor	1.0000	1.0000	1.0000	1.0000	1.0000	1.0000	1.0000	1.0000	1.0000	1.0000	1.0000	1.0000
Total 15-Minute Volume [veh/h]	3	234	1	2	336	13	42	0	11	3	0	2
Total Analysis Volume [veh/h]	11	934	4	9	1345	53	167	0	43	10	0	6
Pedestrian Volume [ped/h]	0			0			0			0		
Bicycle Volume [bicycles/h]	0			0			0			0		

Intersection Settings

Cycle Length [s]	100
Lost time [s]	10.00

Phasing & Timing

Control Type	Permiss	Permiss	Permiss	Permiss	Permiss	Permiss	Split	Split	Split	Split	Split	Split
Signal group	0	2	0	0	6	0	0	8	0	0	4	0
Auxiliary Signal Groups												
Lead / Lag	-	-	-	-	-	-	-	-	-	-	-	-

Movement, Approach, & Intersection Results

V/C, Movement V/C Ratio	0.01	0.29	0.29	0.01	0.28	0.03	0.05	0.00	0.03	0.01	0.00	0.00
Intersection LOS	A											
Intersection V/C	0.457											

Intersection Level Of Service Report
Intersection 15: Irwindale Avenue (NS) at Gladstone Street (EW)

Control Type:	Signalized	Delay (sec / veh):	-
Analysis Method:	ICU 1	Level Of Service:	B
Analysis Period:	15 minutes	Volume to Capacity (v/c):	0.648

Intersection Setup

Name	Irwindale Avenue			Irwindale Avenue			Gladstone Street			Gladstone Street		
Approach	Northbound			Southbound			Eastbound			Westbound		
Lane Configuration												
Turning Movement	Left	Thru	Right	Left	Thru	Right	Left	Thru	Right	Left	Thru	Right
Lane Width [ft]	12.00	12.00	12.00	12.00	12.00	12.00	12.00	12.00	12.00	12.00	12.00	12.00
No. of Lanes in Pocket	1	0	0	2	0	0	1	0	0	1	0	1
Pocket Length [ft]	120.00	100.00	100.00	210.00	100.00	100.00	50.00	100.00	100.00	200.00	100.00	190.00
Speed [mph]	35.00			35.00			25.00			40.00		
Grade [%]	0.00			0.00			0.00			0.00		
Crosswalk	Yes			Yes			Yes			Yes		

Volumes

Name	Irwindale Avenue			Irwindale Avenue			Gladstone Street			Gladstone Street		
Base Volume Input [veh/h]	1	687	308	530	889	8	5	85	27	150	4	207
Base Volume Adjustment Factor	1.0000	1.0000	1.0000	1.0000	1.0000	1.0000	1.0000	1.0000	1.0000	1.0000	1.0000	1.0000
Heavy Vehicles Percentage [%]	2.00	2.00	2.00	2.00	2.00	2.00	2.00	2.00	2.00	2.00	2.00	2.00
Growth Rate	1.00	1.00	1.00	1.00	1.00	1.00	1.00	1.00	1.00	1.00	1.00	1.00
In-Process Volume [veh/h]	0	0	0	0	0	0	0	0	0	0	0	0
Site-Generated Trips [veh/h]	0	0	0	8	0	0	0	0	0	0	0	56
Diverted Trips [veh/h]	0	0	0	0	0	0	0	0	0	0	0	0
Pass-by Trips [veh/h]	0	0	0	0	0	0	0	0	0	0	0	0
Existing Site Adjustment Volume [veh/h]	0	0	0	0	0	0	0	0	0	0	0	0
Other Volume [veh/h]	0	0	0	0	0	0	0	0	0	0	0	0
Total Hourly Volume [veh/h]	1	687	308	538	889	8	5	85	27	150	4	263
Peak Hour Factor	1.0000	1.0000	1.0000	1.0000	1.0000	1.0000	1.0000	1.0000	1.0000	1.0000	1.0000	1.0000
Other Adjustment Factor	1.0000	1.0000	1.0000	1.0000	1.0000	1.0000	1.0000	1.0000	1.0000	1.0000	1.0000	1.0000
Total 15-Minute Volume [veh/h]	0	172	77	135	222	2	1	21	7	38	1	66
Total Analysis Volume [veh/h]	1	687	308	538	889	8	5	85	27	150	4	263
Pedestrian Volume [ped/h]	0			0			0			0		
Bicycle Volume [bicycles/h]	0			0			0			0		

Intersection Settings

Cycle Length [s]	100
Lost time [s]	10.00

Phasing & Timing

Control Type	Protecte	Permiss	Permiss	Protecte	Permiss	Permiss	Permiss	Permiss	Permiss	Permiss	Permiss	Overlap
Signal group	5	2	0	1	6	0	0	8	0	0	4	4
Auxiliary Signal Groups												1,4
Lead / Lag	Lead	-	-	Lead	-	-	-	-	-	-	-	-

Movement, Approach, & Intersection Results

V/C, Movement V/C Ratio	0.00	0.21	0.19	0.17	0.28	0.28	0.00	0.05	0.02	0.09	0.00	0.00
Intersection LOS	B											
Intersection V/C	0.648											

Intersection Level Of Service Report

Intersection 16: Irwindale Avenue (NS) at Arrow Highway (EW)

Control Type:	Signalized	Delay (sec / veh):	-
Analysis Method:	ICU 1	Level Of Service:	C
Analysis Period:	15 minutes	Volume to Capacity (v/c):	0.763

Intersection Setup

Name	Irwindale Avenue			Irwindale Avenue			Arrow Highway			Arrow Highway		
Approach	Northbound			Southbound			Eastbound			Westbound		
Lane Configuration												
Turning Movement	Left	Thru	Right	Left	Thru	Right	Left	Thru	Right	Left	Thru	Right
Lane Width [ft]	12.00	12.00	12.00	12.00	12.00	12.00	12.00	12.00	12.00	12.00	12.00	12.00
No. of Lanes in Pocket	1	0	0	1	0	1	2	0	0	1	0	0
Pocket Length [ft]	175.00	100.00	100.00	185.00	100.00	185.00	205.00	100.00	100.00	335.00	100.00	100.00
Speed [mph]	35.00			35.00			45.00			45.00		
Grade [%]	0.00			0.00			0.00			0.00		
Crosswalk	Yes			Yes			Yes			Yes		

Volumes

Name	Irwindale Avenue			Irwindale Avenue			Arrow Highway			Arrow Highway		
Base Volume Input [veh/h]	91	488	100	191	714	363	373	1315	73	99	475	63
Base Volume Adjustment Factor	1.0000	1.0000	1.0000	1.0000	1.0000	1.0000	1.0000	1.0000	1.0000	1.0000	1.0000	1.0000
Heavy Vehicles Percentage [%]	2.00	2.00	2.00	2.00	2.00	2.00	2.00	2.00	2.00	2.00	2.00	2.00
Growth Rate	1.00	1.00	1.00	1.00	1.00	1.00	1.00	1.00	1.00	1.00	1.00	1.00
In-Process Volume [veh/h]	0	0	0	0	0	0	0	0	0	0	0	0
Site-Generated Trips [veh/h]	0	0	1	0	0	0	0	18	0	7	119	0
Diverted Trips [veh/h]	0	0	0	0	0	0	0	0	0	0	0	0
Pass-by Trips [veh/h]	0	0	0	0	0	0	0	0	0	0	0	0
Existing Site Adjustment Volume [veh/h]	0	0	0	0	0	0	0	0	0	0	0	0
Other Volume [veh/h]	0	0	0	0	0	0	0	0	0	0	0	0
Total Hourly Volume [veh/h]	91	488	101	191	714	363	373	1333	73	106	594	63
Peak Hour Factor	1.0000	1.0000	1.0000	1.0000	1.0000	1.0000	1.0000	1.0000	1.0000	1.0000	1.0000	1.0000
Other Adjustment Factor	1.0000	1.0000	1.0000	1.0000	1.0000	1.0000	1.0000	1.0000	1.0000	1.0000	1.0000	1.0000
Total 15-Minute Volume [veh/h]	23	122	25	48	179	91	93	333	18	27	149	16
Total Analysis Volume [veh/h]	91	488	101	191	714	363	373	1333	73	106	594	63
Pedestrian Volume [ped/h]	0			0			0			0		
Bicycle Volume [bicycles/h]	0			0			0			0		

Intersection Settings

Cycle Length [s]	100
Lost time [s]	10.00

Phasing & Timing

Control Type	Protecte	Permiss	Permiss	Protecte	Permiss	Overlap	Protecte	Permiss	Permiss	Protecte	Permiss	Permiss
Signal group	5	2	0	1	6	6	3	8	0	7	4	0
Auxiliary Signal Groups						3,6						
Lead / Lag	Lead	-	-	Lead	-	-	Lead	-	-	Lead	-	-

Movement, Approach, & Intersection Results

V/C, Movement V/C Ratio	0.06	0.18	0.18	0.12	0.22	0.11	0.12	0.29	0.29	0.07	0.21	0.21
Intersection LOS	C											
Intersection V/C	0.763											

Intersection Level Of Service Report

Intersection 17: Vincent Avenue (NS) at Gladstone Street (EW)

Control Type:	Signalized	Delay (sec / veh):	-
Analysis Method:	ICU 1	Level Of Service:	E
Analysis Period:	15 minutes	Volume to Capacity (v/c):	0.903

Intersection Setup

Name	Vincent Avenue			Vincent Avenue			Gladstone Street			Gladstone Street		
Approach	Northbound			Southbound			Eastbound			Westbound		
Lane Configuration												
Turning Movement	Left	Thru	Right	Left	Thru	Right	Left	Thru	Right	Left	Thru	Right
Lane Width [ft]	12.00	12.00	12.00	12.00	12.00	12.00	12.00	12.00	12.00	12.00	12.00	12.00
No. of Lanes in Pocket	1	0	0	0	0	0	2	0	0	1	0	0
Pocket Length [ft]	195.00	100.00	100.00	100.00	100.00	100.00	230.00	100.00	100.00	175.00	100.00	100.00
Speed [mph]	45.00			25.00			45.00			45.00		
Grade [%]	0.00			0.00			0.00			0.00		
Crosswalk	Yes			Yes			No			Yes		

Volumes

Name	Vincent Avenue			Vincent Avenue			Gladstone Street			Gladstone Street		
Base Volume Input [veh/h]	113	24	475	16	25	18	14	862	160	150	203	3
Base Volume Adjustment Factor	1.0000	1.0000	1.0000	1.0000	1.0000	1.0000	1.0000	1.0000	1.0000	1.0000	1.0000	1.0000
Heavy Vehicles Percentage [%]	2.00	2.00	2.00	2.00	2.00	2.00	2.00	2.00	2.00	2.00	2.00	2.00
Growth Rate	1.00	1.00	1.00	1.00	1.00	1.00	1.00	1.00	1.00	1.00	1.00	1.00
In-Process Volume [veh/h]	0	0	0	0	0	0	0	0	0	0	0	0
Site-Generated Trips [veh/h]	56	0	90	0	0	0	0	0	8	14	0	0
Diverted Trips [veh/h]	0	0	0	0	0	0	0	0	0	0	0	0
Pass-by Trips [veh/h]	0	0	0	0	0	0	0	0	0	0	0	0
Existing Site Adjustment Volume [veh/h]	0	0	0	0	0	0	0	0	0	0	0	0
Other Volume [veh/h]	0	0	0	0	0	0	0	0	0	0	0	0
Total Hourly Volume [veh/h]	169	24	565	16	25	18	14	862	168	164	203	3
Peak Hour Factor	1.0000	1.0000	1.0000	1.0000	1.0000	1.0000	1.0000	1.0000	1.0000	1.0000	1.0000	1.0000
Other Adjustment Factor	1.0000	1.0000	1.0000	1.0000	1.0000	1.0000	1.0000	1.0000	1.0000	1.0000	1.0000	1.0000
Total 15-Minute Volume [veh/h]	42	6	141	4	6	5	4	216	42	41	51	1
Total Analysis Volume [veh/h]	169	24	565	16	25	18	14	862	168	164	203	3
Pedestrian Volume [ped/h]	0			0			0			0		
Bicycle Volume [bicycles/h]	0			0			0			0		

Intersection Settings

Cycle Length [s]	100
Lost time [s]	10.00

Phasing & Timing

Control Type	Split	Split	Split	Split	Split	Split	Protecte	Permiss	Permiss	Protecte	Permiss	Permiss
Signal group	0	2	0	0	6	0	3	8	0	7	4	0
Auxiliary Signal Groups												
Lead / Lag	-	-	-	-	-	-	Lead	-	-	Lead	-	-

Movement, Approach, & Intersection Results

V/C, Movement V/C Ratio	0.11	0.02	0.35	0.01	0.03	0.03	0.00	0.32	0.32	0.10	0.06	0.06
Intersection LOS	E											
Intersection V/C	0.903											

Intersection Level Of Service Report
Intersection 18: Vincent Avenue (NS) at Arrow Highway (EW)

Control Type:	Signalized	Delay (sec / veh):	-
Analysis Method:	ICU 1	Level Of Service:	D
Analysis Period:	15 minutes	Volume to Capacity (v/c):	0.858

Intersection Setup

Name	Vincent Avenue			Vincent Avenue			Arrow Highway			Arrow Highway		
Approach	Northbound			Southbound			Eastbound			Westbound		
Lane Configuration												
Turning Movement	Left	Thru	Right	Left	Thru	Right	Left	Thru	Right	Left	Thru	Right
Lane Width [ft]	12.00	12.00	12.00	12.00	12.00	12.00	12.00	12.00	12.00	12.00	12.00	12.00
No. of Lanes in Pocket	1	0	0	1	0	0	1	0	0	1	0	0
Pocket Length [ft]	200.00	100.00	100.00	200.00	100.00	100.00	215.00	100.00	100.00	160.00	100.00	100.00
Speed [mph]	45.00			45.00			45.00			45.00		
Grade [%]	0.00			0.00			0.00			0.00		
Crosswalk	Yes			Yes			Yes			Yes		

Volumes

Name	Vincent Avenue			Vincent Avenue			Arrow Highway			Arrow Highway		
Base Volume Input [veh/h]	78	314	143	38	276	84	228	1417	171	106	485	40
Base Volume Adjustment Factor	1.0000	1.0000	1.0000	1.0000	1.0000	1.0000	1.0000	1.0000	1.0000	1.0000	1.0000	1.0000
Heavy Vehicles Percentage [%]	2.00	2.00	2.00	2.00	2.00	2.00	2.00	2.00	2.00	2.00	2.00	2.00
Growth Rate	1.00	1.00	1.00	1.00	1.00	1.00	1.00	1.00	1.00	1.00	1.00	1.00
In-Process Volume [veh/h]	0	0	0	0	0	0	0	0	0	0	0	0
Site-Generated Trips [veh/h]	126	146	24	0	22	0	0	0	19	4	0	0
Diverted Trips [veh/h]	0	0	0	0	0	0	0	0	0	0	0	0
Pass-by Trips [veh/h]	0	0	0	0	0	0	0	0	0	0	0	0
Existing Site Adjustment Volume [veh/h]	0	0	0	0	0	0	0	0	0	0	0	0
Other Volume [veh/h]	0	0	0	0	0	0	0	0	0	0	0	0
Total Hourly Volume [veh/h]	204	460	167	38	298	84	228	1417	190	110	485	40
Peak Hour Factor	1.0000	1.0000	1.0000	1.0000	1.0000	1.0000	1.0000	1.0000	1.0000	1.0000	1.0000	1.0000
Other Adjustment Factor	1.0000	1.0000	1.0000	1.0000	1.0000	1.0000	1.0000	1.0000	1.0000	1.0000	1.0000	1.0000
Total 15-Minute Volume [veh/h]	51	115	42	10	75	21	57	354	48	28	121	10
Total Analysis Volume [veh/h]	204	460	167	38	298	84	228	1417	190	110	485	40
Pedestrian Volume [ped/h]	0			0			0			0		
Bicycle Volume [bicycles/h]	0			0			0			0		

Intersection Settings

Cycle Length [s]	100
Lost time [s]	10.00

Phasing & Timing

Control Type	Permiss	Permiss	Permiss	Permiss	Permiss	Permiss	Permiss	Permiss	Permiss	Permiss	Permiss	Permiss
Signal group	0	2	0	0	6	0	0	8	0	0	4	0
Auxiliary Signal Groups												
Lead / Lag	-	-	-	-	-	-	-	-	-	-	-	-

Movement, Approach, & Intersection Results

V/C, Movement V/C Ratio	0.13	0.20	0.20	0.02	0.12	0.12	0.14	0.44	0.12	0.07	0.15	0.03
Intersection LOS	D											
Intersection V/C	0.858											

Intersection Level Of Service Report
Intersection 19: Vincent Avenue (NS) at Project North Driveway (EW)

Control Type:	Two-way stop	Delay (sec / veh):	17.2
Analysis Method:	HCM 6th Edition	Level Of Service:	C
Analysis Period:	15 minutes	Volume to Capacity (v/c):	0.350

Intersection Setup

Name	Vincent Avenue		Vincent Avenue		Project North Driveway	
Approach	Northbound		Southbound		Eastbound	
Lane Configuration						
Turning Movement	Left	Thru	Thru	Right	Left	Right
Lane Width [ft]	12.00	12.00	12.00	12.00	12.00	12.00
No. of Lanes in Pocket	0	0	0	0	0	0
Pocket Length [ft]	100.00	100.00	100.00	100.00	100.00	100.00
Speed [mph]	45.00		45.00		15.00	
Grade [%]	0.00		0.00		0.00	
Crosswalk	No		No		No	

Volumes

Name	Vincent Avenue		Vincent Avenue		Project North Driveway	
Base Volume Input [veh/h]	0	535	551	0	0	0
Base Volume Adjustment Factor	1.0000	1.0000	1.0000	1.0000	1.0000	1.0000
Heavy Vehicles Percentage [%]	2.00	2.00	2.00	2.00	2.00	2.00
Growth Rate	1.00	1.00	1.00	1.00	1.00	1.00
In-Process Volume [veh/h]	0	0	0	0	0	0
Site-Generated Trips [veh/h]	5	137	21	24	159	31
Diverted Trips [veh/h]	0	0	0	0	0	0
Pass-by Trips [veh/h]	0	0	0	0	0	0
Existing Site Adjustment Volume [veh/h]	0	0	0	0	0	0
Other Volume [veh/h]	0	0	0	0	0	0
Total Hourly Volume [veh/h]	5	672	572	24	159	31
Peak Hour Factor	1.0000	1.0000	1.0000	1.0000	1.0000	1.0000
Other Adjustment Factor	1.0000	1.0000	1.0000	1.0000	1.0000	1.0000
Total 15-Minute Volume [veh/h]	1	168	143	6	40	8
Total Analysis Volume [veh/h]	5	672	572	24	159	31
Pedestrian Volume [ped/h]	0		0		0	

Intersection Settings

Priority Scheme	Free	Free	Stop
Flared Lane			
Storage Area [veh]	0	0	0
Two-Stage Gap Acceptance			Yes
Number of Storage Spaces in Median	0	0	2

Movement, Approach, & Intersection Results

V/C, Movement V/C Ratio	0.01	0.01	0.01	0.00	0.35	0.04
d_M, Delay for Movement [s/veh]	8.71	0.00	0.00	0.00	17.16	10.30
Movement LOS	A	A	A	A	C	B
95th-Percentile Queue Length [veh/ln]	0.02	0.00	0.00	0.00	1.55	0.14
95th-Percentile Queue Length [ft/ln]	0.39	0.00	0.00	0.00	38.83	3.41
d_A, Approach Delay [s/veh]	0.06		0.00		16.04	
Approach LOS	A		A		C	
d_I, Intersection Delay [s/veh]	2.11					
Intersection LOS	C					

Intersection Level Of Service Report

Intersection 20: Vincent Avenue (NS) at Project South Driveway (EW)

Control Type:	Two-way stop	Delay (sec / veh):	16.1
Analysis Method:	HCM 6th Edition	Level Of Service:	C
Analysis Period:	15 minutes	Volume to Capacity (v/c):	0.297

Intersection Setup

Name	Vincent Avenue		Vincent Avenue		Project South Driveway	
Approach	Northbound		Southbound		Eastbound	
Lane Configuration						
Turning Movement	Left	Thru	Thru	Right	Left	Right
Lane Width [ft]	12.00	12.00	12.00	12.00	12.00	12.00
No. of Lanes in Pocket	0	0	0	0	0	0
Pocket Length [ft]	100.00	100.00	100.00	100.00	100.00	100.00
Speed [mph]	45.00		45.00		15.00	
Grade [%]	0.00		0.00		0.00	
Crosswalk	No		No		No	

Volumes

Name	Vincent Avenue		Vincent Avenue		Project South Driveway	
Base Volume Input [veh/h]	0	535	551	0	0	0
Base Volume Adjustment Factor	1.0000	1.0000	1.0000	1.0000	1.0000	1.0000
Heavy Vehicles Percentage [%]	2.00	2.00	2.00	2.00	2.00	2.00
Growth Rate	1.00	1.00	1.00	1.00	1.00	1.00
In-Process Volume [veh/h]	0	0	0	0	0	0
Site-Generated Trips [veh/h]	8	5	31	21	137	52
Diverted Trips [veh/h]	0	0	0	0	0	0
Pass-by Trips [veh/h]	0	0	0	0	0	0
Existing Site Adjustment Volume [veh/h]	0	0	0	0	0	0
Other Volume [veh/h]	0	0	0	0	0	0
Total Hourly Volume [veh/h]	8	540	582	21	137	52
Peak Hour Factor	1.0000	1.0000	1.0000	1.0000	1.0000	1.0000
Other Adjustment Factor	1.0000	1.0000	1.0000	1.0000	1.0000	1.0000
Total 15-Minute Volume [veh/h]	2	135	146	5	34	13
Total Analysis Volume [veh/h]	8	540	582	21	137	52
Pedestrian Volume [ped/h]	0		0		0	

Intersection Settings

Priority Scheme	Free	Free	Stop
Flared Lane			
Storage Area [veh]	0	0	0
Two-Stage Gap Acceptance			Yes
Number of Storage Spaces in Median	0	0	2

Movement, Approach, & Intersection Results

V/C, Movement V/C Ratio	0.01	0.01	0.01	0.00	0.30	0.07
d_M, Delay for Movement [s/veh]	8.74	0.00	0.00	0.00	16.07	10.51
Movement LOS	A	A	A	A	C	B
95th-Percentile Queue Length [veh/ln]	0.02	0.00	0.00	0.00	1.23	0.24
95th-Percentile Queue Length [ft/ln]	0.62	0.00	0.00	0.00	30.75	5.95
d_A, Approach Delay [s/veh]	0.13		0.00		14.54	
Approach LOS	A		A		B	
d_I, Intersection Delay [s/veh]	2.10					
Intersection LOS	C					

Intersection Level Of Service Report
Intersection 21: Vincent Avenue (NS) at Cypress Street (EW)

Control Type:	Signalized	Delay (sec / veh):	-
Analysis Method:	ICU 1	Level Of Service:	C
Analysis Period:	15 minutes	Volume to Capacity (v/c):	0.728

Intersection Setup

Name	Vincent Avenue			Vincent Avenue			Cypress Street			Cypress Street		
Approach	Northbound			Southbound			Eastbound			Westbound		
Lane Configuration												
Turning Movement	Left	Thru	Right	Left	Thru	Right	Left	Thru	Right	Left	Thru	Right
Lane Width [ft]	12.00	12.00	12.00	12.00	12.00	12.00	12.00	12.00	12.00	12.00	12.00	12.00
No. of Lanes in Pocket	1	0	0	1	0	0	1	0	0	1	0	0
Pocket Length [ft]	120.00	100.00	100.00	120.00	100.00	100.00	100.00	100.00	100.00	150.00	100.00	100.00
Speed [mph]	40.00			45.00			40.00			40.00		
Grade [%]	0.00			0.00			0.00			0.00		
Crosswalk	Yes			Yes			Yes			Yes		

Volumes

Name	Vincent Avenue			Vincent Avenue			Cypress Street			Cypress Street		
Base Volume Input [veh/h]	59	447	138	59	448	30	88	984	112	92	295	41
Base Volume Adjustment Factor	1.0000	1.0000	1.0000	1.0000	1.0000	1.0000	1.0000	1.0000	1.0000	1.0000	1.0000	1.0000
Heavy Vehicles Percentage [%]	2.00	2.00	2.00	2.00	2.00	2.00	2.00	2.00	2.00	2.00	2.00	2.00
Growth Rate	1.00	1.00	1.00	1.00	1.00	1.00	1.00	1.00	1.00	1.00	1.00	1.00
In-Process Volume [veh/h]	0	0	0	0	0	0	0	0	0	0	0	0
Site-Generated Trips [veh/h]	0	11	0	7	69	7	1	0	0	0	0	1
Diverted Trips [veh/h]	0	0	0	0	0	0	0	0	0	0	0	0
Pass-by Trips [veh/h]	0	0	0	0	0	0	0	0	0	0	0	0
Existing Site Adjustment Volume [veh/h]	0	0	0	0	0	0	0	0	0	0	0	0
Other Volume [veh/h]	0	0	0	0	0	0	0	0	0	0	0	0
Total Hourly Volume [veh/h]	59	458	138	66	517	37	89	984	112	92	295	42
Peak Hour Factor	1.0000	1.0000	1.0000	1.0000	1.0000	1.0000	1.0000	1.0000	1.0000	1.0000	1.0000	1.0000
Other Adjustment Factor	1.0000	1.0000	1.0000	1.0000	1.0000	1.0000	1.0000	1.0000	1.0000	1.0000	1.0000	1.0000
Total 15-Minute Volume [veh/h]	15	115	35	17	129	9	22	246	28	23	74	11
Total Analysis Volume [veh/h]	59	458	138	66	517	37	89	984	112	92	295	42
Pedestrian Volume [ped/h]	0			0			0			0		
Bicycle Volume [bicycles/h]	0			0			0			0		

Intersection Settings

Cycle Length [s]	100
Lost time [s]	10.00

Phasing & Timing

Control Type	Permiss	Permiss	Permiss	Permiss	Permiss	Permiss	Permiss	Permiss	Permiss	Permiss	Permiss	Permiss
Signal group	0	2	0	0	6	0	0	8	0	0	4	0
Auxiliary Signal Groups												
Lead / Lag	-	-	-	-	-	-	-	-	-	-	-	-

Movement, Approach, & Intersection Results

V/C, Movement V/C Ratio	0.04	0.19	0.19	0.04	0.17	0.17	0.06	0.34	0.34	0.06	0.11	0.11
Intersection LOS	C											
Intersection V/C	0.728											

Intersection Level Of Service Report

Intersection 22: Vincent Avenue (NS) at San Bernardino Road (EW)

Control Type:	Signalized	Delay (sec / veh):	-
Analysis Method:	ICU 1	Level Of Service:	B
Analysis Period:	15 minutes	Volume to Capacity (v/c):	0.674

Intersection Setup

Name	Vincent Avenue			Vincent Avenue			San Bernardino Road			San Berardino Road		
Approach	Northbound			Southbound			Eastbound			Westbound		
Lane Configuration												
Turning Movement	Left	Thru	Right	Left	Thru	Right	Left	Thru	Right	Left	Thru	Right
Lane Width [ft]	12.00	12.00	12.00	12.00	12.00	12.00	12.00	12.00	12.00	12.00	12.00	12.00
No. of Lanes in Pocket	1	0	0	1	0	0	1	0	0	1	0	0
Pocket Length [ft]	120.00	100.00	100.00	150.00	100.00	100.00	150.00	100.00	100.00	165.00	100.00	100.00
Speed [mph]	35.00			40.00			40.00			40.00		
Grade [%]	0.00			0.00			0.00			0.00		
Crosswalk	Yes			Yes			Yes			Yes		

Volumes

Name	Vincent Avenue			Vincent Avenue			San Bernardino Road			San Berardino Road		
Base Volume Input [veh/h]	94	563	77	76	574	48	112	651	110	98	273	80
Base Volume Adjustment Factor	1.0000	1.0000	1.0000	1.0000	1.0000	1.0000	1.0000	1.0000	1.0000	1.0000	1.0000	1.0000
Heavy Vehicles Percentage [%]	2.00	2.00	2.00	2.00	2.00	2.00	2.00	2.00	2.00	2.00	2.00	2.00
Growth Rate	1.00	1.00	1.00	1.00	1.00	1.00	1.00	1.00	1.00	1.00	1.00	1.00
In-Process Volume [veh/h]	0	0	0	0	0	0	0	0	0	0	0	0
Site-Generated Trips [veh/h]	0	11	0	0	69	0	0	0	0	0	0	0
Diverted Trips [veh/h]	0	0	0	0	0	0	0	0	0	0	0	0
Pass-by Trips [veh/h]	0	0	0	0	0	0	0	0	0	0	0	0
Existing Site Adjustment Volume [veh/h]	0	0	0	0	0	0	0	0	0	0	0	0
Other Volume [veh/h]	0	0	0	0	0	0	0	0	0	0	0	0
Total Hourly Volume [veh/h]	94	574	77	76	643	48	112	651	110	98	273	80
Peak Hour Factor	1.0000	1.0000	1.0000	1.0000	1.0000	1.0000	1.0000	1.0000	1.0000	1.0000	1.0000	1.0000
Other Adjustment Factor	1.0000	1.0000	1.0000	1.0000	1.0000	1.0000	1.0000	1.0000	1.0000	1.0000	1.0000	1.0000
Total 15-Minute Volume [veh/h]	24	144	19	19	161	12	28	163	28	25	68	20
Total Analysis Volume [veh/h]	94	574	77	76	643	48	112	651	110	98	273	80
Pedestrian Volume [ped/h]	0			0			0			0		
Bicycle Volume [bicycles/h]	0			0			0			0		

Intersection Settings

Cycle Length [s]	100
Lost time [s]	10.00

Phasing & Timing

Control Type	Permiss	Permiss	Permiss	Permiss	Permiss	Permiss	Protecte	Permiss	Permiss	Protecte	Permiss	Permiss
Signal group	0	2	0	0	6	0	3	8	0	7	4	0
Auxiliary Signal Groups												
Lead / Lag	-	-	-	-	-	-	Lead	-	-	Lead	-	-

Movement, Approach, & Intersection Results

V/C, Movement V/C Ratio	0.06	0.20	0.20	0.05	0.22	0.22	0.07	0.24	0.24	0.06	0.11	0.11
Intersection LOS	B											
Intersection V/C	0.674											

Intersection Level Of Service Report
Intersection 23: Vincent Avenue (NS) at Badillo Street (EW)

Control Type:	Signalized	Delay (sec / veh):	-
Analysis Method:	ICU 1	Level Of Service:	C
Analysis Period:	15 minutes	Volume to Capacity (v/c):	0.774

Intersection Setup

Name	Vincent Avenue			Vincent Avenue			Dadillo Street			Badillo Street		
Approach	Northbound			Southbound			Eastbound			Westbound		
Lane Configuration												
Turning Movement	Left	Thru	Right	Left	Thru	Right	Left	Thru	Right	Left	Thru	Right
Lane Width [ft]	12.00	12.00	12.00	12.00	12.00	12.00	12.00	12.00	12.00	12.00	12.00	12.00
No. of Lanes in Pocket	1	0	0	1	0	0	1	0	0	1	0	0
Pocket Length [ft]	200.00	100.00	100.00	190.00	100.00	100.00	195.00	100.00	100.00	195.00	100.00	100.00
Speed [mph]	40.00			35.00			45.00			45.00		
Grade [%]	0.00			0.00			0.00			0.00		
Crosswalk	Yes			Yes			Yes			Yes		

Volumes

Name	Vincent Avenue			Vincent Avenue			Dadillo Street			Badillo Street		
Base Volume Input [veh/h]	93	584	144	62	702	53	65	953	172	130	421	56
Base Volume Adjustment Factor	1.0000	1.0000	1.0000	1.0000	1.0000	1.0000	1.0000	1.0000	1.0000	1.0000	1.0000	1.0000
Heavy Vehicles Percentage [%]	2.00	2.00	2.00	2.00	2.00	2.00	2.00	2.00	2.00	2.00	2.00	2.00
Growth Rate	1.00	1.00	1.00	1.00	1.00	1.00	1.00	1.00	1.00	1.00	1.00	1.00
In-Process Volume [veh/h]	0	0	0	0	0	0	0	0	0	0	0	0
Site-Generated Trips [veh/h]	0	9	0	7	55	7	1	0	0	0	0	1
Diverted Trips [veh/h]	0	0	0	0	0	0	0	0	0	0	0	0
Pass-by Trips [veh/h]	0	0	0	0	0	0	0	0	0	0	0	0
Existing Site Adjustment Volume [veh/h]	0	0	0	0	0	0	0	0	0	0	0	0
Other Volume [veh/h]	0	0	0	0	0	0	0	0	0	0	0	0
Total Hourly Volume [veh/h]	93	593	144	69	757	60	66	953	172	130	421	57
Peak Hour Factor	1.0000	1.0000	1.0000	1.0000	1.0000	1.0000	1.0000	1.0000	1.0000	1.0000	1.0000	1.0000
Other Adjustment Factor	1.0000	1.0000	1.0000	1.0000	1.0000	1.0000	1.0000	1.0000	1.0000	1.0000	1.0000	1.0000
Total 15-Minute Volume [veh/h]	23	148	36	17	189	15	17	238	43	33	105	14
Total Analysis Volume [veh/h]	93	593	144	69	757	60	66	953	172	130	421	57
Pedestrian Volume [ped/h]	0			0			0			0		
Bicycle Volume [bicycles/h]	0			0			0			0		

Intersection Settings

Cycle Length [s]	100
Lost time [s]	10.00

Phasing & Timing

Control Type	Protecte	Permiss	Permiss	Protecte	Permiss	Permiss	Protecte	Permiss	Permiss	Protecte	Permiss	Permiss
Signal group	5	2	0	1	6	0	3	8	0	7	4	0
Auxiliary Signal Groups												
Lead / Lag	Lead	-	-	Lead	-	-	Lead	-	-	Lead	-	-

Movement, Approach, & Intersection Results

V/C, Movement V/C Ratio	0.06	0.19	0.09	0.04	0.24	0.04	0.04	0.30	0.11	0.08	0.13	0.04
Intersection LOS	C											
Intersection V/C	0.774											

Intersection Level Of Service Report
Intersection 24: Vincent Avenue (NS) at Puente Avenue (EW)

Control Type:	Signalized	Delay (sec / veh):	-
Analysis Method:	ICU 1	Level Of Service:	B
Analysis Period:	15 minutes	Volume to Capacity (v/c):	0.645

Intersection Setup

Name	Vincent Avenue			Vincent Avenue			Puente Avenue			Puente Avenue		
Approach	Northbound			Southbound			Eastbound			Westbound		
Lane Configuration												
Turning Movement	Left	Thru	Right	Left	Thru	Right	Left	Thru	Right	Left	Thru	Right
Lane Width [ft]	12.00	12.00	12.00	12.00	12.00	12.00	12.00	12.00	12.00	12.00	12.00	12.00
No. of Lanes in Pocket	1	0	0	1	0	0	0	0	0	0	0	0
Pocket Length [ft]	195.00	100.00	100.00	195.00	100.00	100.00	100.00	100.00	100.00	100.00	100.00	100.00
Speed [mph]	40.00			40.00			40.00			40.00		
Grade [%]	0.00			0.00			0.00			0.00		
Crosswalk	Yes			Yes			Yes			Yes		

Volumes

Name	Vincent Avenue			Vincent Avenue			Puente Avenue			Puente Avenue		
Base Volume Input [veh/h]	73	727	78	63	832	60	75	540	67	48	265	37
Base Volume Adjustment Factor	1.0000	1.0000	1.0000	1.0000	1.0000	1.0000	1.0000	1.0000	1.0000	1.0000	1.0000	1.0000
Heavy Vehicles Percentage [%]	2.00	2.00	2.00	2.00	2.00	2.00	2.00	2.00	2.00	2.00	2.00	2.00
Growth Rate	1.00	1.00	1.00	1.00	1.00	1.00	1.00	1.00	1.00	1.00	1.00	1.00
In-Process Volume [veh/h]	0	0	0	0	0	0	0	0	0	0	0	0
Site-Generated Trips [veh/h]	0	9	0	0	55	0	0	0	0	0	0	0
Diverted Trips [veh/h]	0	0	0	0	0	0	0	0	0	0	0	0
Pass-by Trips [veh/h]	0	0	0	0	0	0	0	0	0	0	0	0
Existing Site Adjustment Volume [veh/h]	0	0	0	0	0	0	0	0	0	0	0	0
Other Volume [veh/h]	0	0	0	0	0	0	0	0	0	0	0	0
Total Hourly Volume [veh/h]	73	736	78	63	887	60	75	540	67	48	265	37
Peak Hour Factor	1.0000	1.0000	1.0000	1.0000	1.0000	1.0000	1.0000	1.0000	1.0000	1.0000	1.0000	1.0000
Other Adjustment Factor	1.0000	1.0000	1.0000	1.0000	1.0000	1.0000	1.0000	1.0000	1.0000	1.0000	1.0000	1.0000
Total 15-Minute Volume [veh/h]	18	184	20	16	222	15	19	135	17	12	66	9
Total Analysis Volume [veh/h]	73	736	78	63	887	60	75	540	67	48	265	37
Pedestrian Volume [ped/h]	0			0			0			0		
Bicycle Volume [bicycles/h]	0			0			0			0		

Intersection Settings

Cycle Length [s]	100
Lost time [s]	10.00

Phasing & Timing

Control Type	Permiss	Permiss	Permiss	Permiss	Permiss	Permiss	Permiss	Permiss	Permiss	Permiss	Permiss	Permiss
Signal group	0	2	0	0	6	0	0	8	0	0	4	0
Auxiliary Signal Groups												
Lead / Lag	-	-	-	-	-	-	-	-	-	-	-	-

Movement, Approach, & Intersection Results

V/C, Movement V/C Ratio	0.05	0.23	0.05	0.04	0.28	0.04	0.05	0.19	0.04	0.03	0.10	0.02
Intersection LOS	B											
Intersection V/C	0.645											

Intersection Level Of Service Report

Intersection 25: Vincent Avenue (NS) at Rowland Avenue (EW)

Control Type:	Signalized	Delay (sec / veh):	-
Analysis Method:	ICU 1	Level Of Service:	B
Analysis Period:	15 minutes	Volume to Capacity (v/c):	0.610

Intersection Setup

Name	Vincent Avenue			Vincent Avenue			Rowland Avenue			Rowland Avenue		
Approach	Northbound			Southbound			Eastbound			Westbound		
Lane Configuration												
Turning Movement	Left	Thru	Right	Left	Thru	Right	Left	Thru	Right	Left	Thru	Right
Lane Width [ft]	12.00	12.00	12.00	12.00	12.00	12.00	12.00	12.00	12.00	12.00	12.00	12.00
No. of Lanes in Pocket	1	0	0	1	0	0	0	0	0	0	0	0
Pocket Length [ft]	145.00	100.00	100.00	125.00	100.00	100.00	100.00	100.00	100.00	100.00	100.00	100.00
Speed [mph]	35.00			40.00			35.00			35.00		
Grade [%]	0.00			0.00			0.00			0.00		
Crosswalk	Yes			Yes			Yes			Yes		

Volumes

Name	Vincent Avenue			Vincent Avenue			Rowland Avenue			Rowland Avenue		
Base Volume Input [veh/h]	33	840	113	98	849	18	14	206	49	69	93	31
Base Volume Adjustment Factor	1.0000	1.0000	1.0000	1.0000	1.0000	1.0000	1.0000	1.0000	1.0000	1.0000	1.0000	1.0000
Heavy Vehicles Percentage [%]	2.00	2.00	2.00	2.00	2.00	2.00	2.00	2.00	2.00	2.00	2.00	2.00
Growth Rate	1.00	1.00	1.00	1.00	1.00	1.00	1.00	1.00	1.00	1.00	1.00	1.00
In-Process Volume [veh/h]	0	0	0	0	0	0	0	0	0	0	0	0
Site-Generated Trips [veh/h]	0	7	0	5	45	5	1	0	0	0	0	1
Diverted Trips [veh/h]	0	0	0	0	0	0	0	0	0	0	0	0
Pass-by Trips [veh/h]	0	0	0	0	0	0	0	0	0	0	0	0
Existing Site Adjustment Volume [veh/h]	0	0	0	0	0	0	0	0	0	0	0	0
Other Volume [veh/h]	0	0	0	0	0	0	0	0	0	0	0	0
Total Hourly Volume [veh/h]	33	847	113	103	894	23	15	206	49	69	93	32
Peak Hour Factor	1.0000	1.0000	1.0000	1.0000	1.0000	1.0000	1.0000	1.0000	1.0000	1.0000	1.0000	1.0000
Other Adjustment Factor	1.0000	1.0000	1.0000	1.0000	1.0000	1.0000	1.0000	1.0000	1.0000	1.0000	1.0000	1.0000
Total 15-Minute Volume [veh/h]	8	212	28	26	224	6	4	52	12	17	23	8
Total Analysis Volume [veh/h]	33	847	113	103	894	23	15	206	49	69	93	32
Pedestrian Volume [ped/h]	0			0			0			0		
Bicycle Volume [bicycles/h]	0			0			0			0		

Intersection Settings

Cycle Length [s]	100
Lost time [s]	10.00

Phasing & Timing

Control Type	Protecte	Permiss	Permiss	Protecte	Permiss	Permiss	Permiss	Permiss	Permiss	Permiss	Permiss	Permiss
Signal group	5	2	0	1	6	0	0	8	0	0	4	0
Auxiliary Signal Groups												
Lead / Lag	Lead	-	-	Lead	-	-	-	-	-	-	-	-

Movement, Approach, & Intersection Results

V/C, Movement V/C Ratio	0.02	0.26	0.07	0.06	0.28	0.01	0.01	0.14	0.03	0.04	0.10	0.02
Intersection LOS	B											
Intersection V/C	0.610											

Intersection Level Of Service Report
Intersection 26: Vincent Avenue (NS) at Workman Avenue (EW)

Control Type:	Signalized	Delay (sec / veh):	-
Analysis Method:	ICU 1	Level Of Service:	B
Analysis Period:	15 minutes	Volume to Capacity (v/c):	0.688

Intersection Setup

Name	Vincent Avenue			Vincent Avenue			Workman Avenue			Workman Avenue		
Approach	Northbound			Southbound			Eastbound			Westbound		
Lane Configuration												
Turning Movement	Left	Thru	Right	Left	Thru	Right	Left	Thru	Right	Left	Thru	Right
Lane Width [ft]	12.00	12.00	12.00	12.00	12.00	12.00	12.00	12.00	12.00	12.00	12.00	12.00
No. of Lanes in Pocket	1	0	0	1	0	0	0	0	0	0	0	0
Pocket Length [ft]	120.00	100.00	100.00	180.00	100.00	100.00	100.00	100.00	100.00	100.00	100.00	100.00
Speed [mph]	35.00			40.00			35.00			35.00		
Grade [%]	0.00			0.00			0.00			0.00		
Crosswalk	Yes			Yes			Yes			Yes		

Volumes

Name	Vincent Avenue			Vincent Avenue			Workman Avenue			Workman Avenue		
Base Volume Input [veh/h]	91	947	198	81	856	24	17	257	64	108	143	47
Base Volume Adjustment Factor	1.0000	1.0000	1.0000	1.0000	1.0000	1.0000	1.0000	1.0000	1.0000	1.0000	1.0000	1.0000
Heavy Vehicles Percentage [%]	2.00	2.00	2.00	2.00	2.00	2.00	2.00	2.00	2.00	2.00	2.00	2.00
Growth Rate	1.00	1.00	1.00	1.00	1.00	1.00	1.00	1.00	1.00	1.00	1.00	1.00
In-Process Volume [veh/h]	0	0	0	0	0	0	0	0	0	0	0	0
Site-Generated Trips [veh/h]	0	7	0	0	45	0	0	0	0	0	0	0
Diverted Trips [veh/h]	0	0	0	0	0	0	0	0	0	0	0	0
Pass-by Trips [veh/h]	0	0	0	0	0	0	0	0	0	0	0	0
Existing Site Adjustment Volume [veh/h]	0	0	0	0	0	0	0	0	0	0	0	0
Other Volume [veh/h]	0	0	0	0	0	0	0	0	0	0	0	0
Total Hourly Volume [veh/h]	91	954	198	81	901	24	17	257	64	108	143	47
Peak Hour Factor	1.0000	1.0000	1.0000	1.0000	1.0000	1.0000	1.0000	1.0000	1.0000	1.0000	1.0000	1.0000
Other Adjustment Factor	1.0000	1.0000	1.0000	1.0000	1.0000	1.0000	1.0000	1.0000	1.0000	1.0000	1.0000	1.0000
Total 15-Minute Volume [veh/h]	23	239	50	20	225	6	4	64	16	27	36	12
Total Analysis Volume [veh/h]	91	954	198	81	901	24	17	257	64	108	143	47
Pedestrian Volume [ped/h]	0			0			0			0		
Bicycle Volume [bicycles/h]	0			0			0			0		

Intersection Settings

Cycle Length [s]	100
Lost time [s]	10.00

Phasing & Timing

Control Type	Protecte	Permiss	Permiss	Protecte	Permiss	Permiss	Permiss	Permiss	Permiss	Permiss	Permiss	Permiss
Signal group	5	2	0	1	6	0	0	8	0	0	4	0
Auxiliary Signal Groups												
Lead / Lag	Lead	-	-	Lead	-	-	-	-	-	-	-	-

Movement, Approach, & Intersection Results

V/C, Movement V/C Ratio	0.06	0.30	0.12	0.05	0.28	0.02	0.01	0.17	0.04	0.07	0.16	0.03
Intersection LOS	B											
Intersection V/C	0.688											

Intersection Level Of Service Report
Intersection 27: Vincent Avenue (NS) at I-10 WB Ramps (EW)

Control Type:	Signalized	Delay (sec / veh):	-
Analysis Method:	ICU 1	Level Of Service:	A
Analysis Period:	15 minutes	Volume to Capacity (v/c):	0.458

Intersection Setup

Name	Vincent Avenue		Vincent Avenue		I-10 WB Ramps	
Approach	Northbound		Southbound		Westbound	
Lane Configuration						
Turning Movement	Thru	Right	Left	Thru	Left	Right
Lane Width [ft]	12.00	12.00	12.00	12.00	12.00	12.00
No. of Lanes in Pocket	0	0	0	0	0	1
Pocket Length [ft]	100.00	100.00	100.00	100.00	100.00	220.00
Speed [mph]	35.00		35.00		35.00	
Grade [%]	0.00		0.00		0.00	
Crosswalk	No		No		Yes	

Volumes

Name	Vincent Avenue		Vincent Avenue		I-10 WB Ramps	
Base Volume Input [veh/h]	1060	0	0	1075	393	194
Base Volume Adjustment Factor	1.0000	1.0000	1.0000	1.0000	1.0000	1.0000
Heavy Vehicles Percentage [%]	2.00	2.00	2.00	2.00	2.00	2.00
Growth Rate	1.00	1.00	1.00	1.00	1.00	1.00
In-Process Volume [veh/h]	0	0	0	0	0	0
Site-Generated Trips [veh/h]	2	0	0	45	0	5
Diverted Trips [veh/h]	0	0	0	0	0	0
Pass-by Trips [veh/h]	0	0	0	0	0	0
Existing Site Adjustment Volume [veh/h]	0	0	0	0	0	0
Other Volume [veh/h]	0	0	0	0	0	0
Total Hourly Volume [veh/h]	1062	0	0	1120	393	199
Peak Hour Factor	1.0000	1.0000	1.0000	1.0000	1.0000	1.0000
Other Adjustment Factor	1.0000	1.0000	1.0000	1.0000	1.0000	1.0000
Total 15-Minute Volume [veh/h]	266	0	0	280	98	50
Total Analysis Volume [veh/h]	1062	0	0	1120	393	199
Pedestrian Volume [ped/h]	0		0		0	
Bicycle Volume [bicycles/h]	0		0		0	

Intersection Settings

Cycle Length [s]	100
Lost time [s]	10.00

Phasing & Timing

Control Type	Permissive	Permissive	Permissive	Permissive	Split	Split
Signal group	2	0	0	6	7	0
Auxiliary Signal Groups						
Lead / Lag	-	-	-	-	Lead	-

Movement, Approach, & Intersection Results

V/C, Movement V/C Ratio	0.22	0.00	0.00	0.23	0.12	0.12
Intersection LOS	A					
Intersection V/C	0.458					

Intersection Level Of Service Report
Intersection 28: Vincent Avenue (NS) at I-10 EB Ramps (EW)

Control Type:	Signalized	Delay (sec / veh):	-
Analysis Method:	ICU 1	Level Of Service:	A
Analysis Period:	15 minutes	Volume to Capacity (v/c):	0.538

Intersection Setup

Name	Vincent Avenue			Vincent Avenue			I-10 EB Ramps			I-10 EB Ramps		
Approach	Northbound			Southbound			Eastbound			Westbound		
Lane Configuration												
Turning Movement	Left	Thru	Right	Left	Thru	Right	Left	Thru	Right	Left	Thru	Right
Lane Width [ft]	12.00	12.00	12.00	12.00	12.00	12.00	12.00	12.00	12.00	12.00	12.00	12.00
No. of Lanes in Pocket	0	0	0	0	0	0	0	0	0	0	0	0
Pocket Length [ft]	100.00	100.00	100.00	100.00	100.00	100.00	100.00	100.00	100.00	100.00	100.00	100.00
Speed [mph]	35.00			35.00			35.00			35.00		
Grade [%]	0.00			0.00			0.00			0.00		
Crosswalk	No			No			Yes			Yes		

Volumes

Name	Vincent Avenue			Vincent Avenue			I-10 EB Ramps			I-10 EB Ramps		
Base Volume Input [veh/h]	0	903	711	0	1381	340	160	0	129	0	0	0
Base Volume Adjustment Factor	1.0000	1.0000	1.0000	1.0000	1.0000	1.0000	1.0000	1.0000	1.0000	1.0000	1.0000	1.0000
Heavy Vehicles Percentage [%]	2.00	2.00	2.00	2.00	2.00	2.00	2.00	2.00	2.00	2.00	2.00	2.00
Growth Rate	1.00	1.00	1.00	1.00	1.00	1.00	1.00	1.00	1.00	1.00	1.00	1.00
In-Process Volume [veh/h]	0	0	0	0	0	0	0	0	0	0	0	0
Site-Generated Trips [veh/h]	0	0	0	7	0	24	2	0	0	0	0	0
Diverted Trips [veh/h]	0	0	0	0	0	0	0	0	0	0	0	0
Pass-by Trips [veh/h]	0	0	0	0	0	0	0	0	0	0	0	0
Existing Site Adjustment Volume [veh/h]	0	0	0	0	0	0	0	0	0	0	0	0
Other Volume [veh/h]	0	0	0	0	0	0	0	0	0	0	0	0
Total Hourly Volume [veh/h]	0	903	711	7	1381	364	162	0	129	0	0	0
Peak Hour Factor	1.0000	1.0000	1.0000	1.0000	1.0000	1.0000	1.0000	1.0000	1.0000	1.0000	1.0000	1.0000
Other Adjustment Factor	1.0000	1.0000	1.0000	1.0000	1.0000	1.0000	1.0000	1.0000	1.0000	1.0000	1.0000	1.0000
Total 15-Minute Volume [veh/h]	0	226	178	2	345	91	41	0	32	0	0	0
Total Analysis Volume [veh/h]	0	903	711	7	1381	364	162	0	129	0	0	0
Pedestrian Volume [ped/h]	0			0			0			0		
Bicycle Volume [bicycles/h]	0			0			0			0		

Intersection Settings

Cycle Length [s]	100
Lost time [s]	10.00

Phasing & Timing

Control Type	Permiss	Permiss	Permiss	Permiss	Permiss	Permiss	Split	Permiss	Split	Permiss	Permiss	Permiss
Signal group	0	2	0	0	6	0	3	0	0	0	0	0
Auxiliary Signal Groups												
Lead / Lag	-	-	-	-	-	-	Lead	-	-	-	-	-

Movement, Approach, & Intersection Results

V/C, Movement V/C Ratio	0.00	0.34	0.34	0.00	0.29	0.23	0.10	0.00	0.04	0.00	0.00	0.00
Intersection LOS	A											
Intersection V/C	0.538											

Intersection Level Of Service Report

Intersection 29: Vernon Ave/Lark Ellen Ave (NS) at Gladstone Street (EW)

Control Type:	Signalized	Delay (sec / veh):	-
Analysis Method:	ICU 1	Level Of Service:	C
Analysis Period:	15 minutes	Volume to Capacity (v/c):	0.746

Intersection Setup

Name	Lark Ellen Avenue			Vernon Avenue			Gladstone Street			Gladstone Street		
Approach	Northbound			Southbound			Eastbound			Westbound		
Lane Configuration												
Turning Movement	Left	Thru	Right	Left	Thru	Right	Left	Thru	Right	Left	Thru	Right
Lane Width [ft]	12.00	12.00	12.00	12.00	12.00	12.00	12.00	12.00	12.00	12.00	12.00	12.00
No. of Lanes in Pocket	1	0	0	1	0	0	1	0	0	1	0	0
Pocket Length [ft]	60.00	100.00	100.00	60.00	100.00	100.00	70.00	100.00	100.00	60.00	100.00	100.00
Speed [mph]	35.00			35.00			45.00			45.00		
Grade [%]	0.00			0.00			0.00			0.00		
Crosswalk	Yes			Yes			Yes			Yes		

Volumes

Name	Lark Ellen Avenue			Vernon Avenue			Gladstone Street			Gladstone Street		
Base Volume Input [veh/h]	41	335	161	42	424	62	167	992	74	92	238	29
Base Volume Adjustment Factor	1.0000	1.0000	1.0000	1.0000	1.0000	1.0000	1.0000	1.0000	1.0000	1.0000	1.0000	1.0000
Heavy Vehicles Percentage [%]	2.00	2.00	2.00	2.00	2.00	2.00	2.00	2.00	2.00	2.00	2.00	2.00
Growth Rate	1.00	1.00	1.00	1.00	1.00	1.00	1.00	1.00	1.00	1.00	1.00	1.00
In-Process Volume [veh/h]	0	0	0	0	0	0	0	0	0	0	0	0
Site-Generated Trips [veh/h]	0	0	0	0	0	4	26	64	0	0	10	0
Diverted Trips [veh/h]	0	0	0	0	0	0	0	0	0	0	0	0
Pass-by Trips [veh/h]	0	0	0	0	0	0	0	0	0	0	0	0
Existing Site Adjustment Volume [veh/h]	0	0	0	0	0	0	0	0	0	0	0	0
Other Volume [veh/h]	0	0	0	0	0	0	0	0	0	0	0	0
Total Hourly Volume [veh/h]	41	335	161	42	424	66	193	1056	74	92	248	29
Peak Hour Factor	1.0000	1.0000	1.0000	1.0000	1.0000	1.0000	1.0000	1.0000	1.0000	1.0000	1.0000	1.0000
Other Adjustment Factor	1.0000	1.0000	1.0000	1.0000	1.0000	1.0000	1.0000	1.0000	1.0000	1.0000	1.0000	1.0000
Total 15-Minute Volume [veh/h]	10	84	40	11	106	17	48	264	19	23	62	7
Total Analysis Volume [veh/h]	41	335	161	42	424	66	193	1056	74	92	248	29
Pedestrian Volume [ped/h]	0			0			0			0		
Bicycle Volume [bicycles/h]	0			0			0			0		

Intersection Settings

Cycle Length [s]	100
Lost time [s]	10.00

Phasing & Timing

Control Type	Permiss	Permiss	Permiss	Permiss	Permiss	Permiss	Permiss	Permiss	Permiss	Permiss	Permiss	Permiss
Signal group	0	2	0	0	6	0	0	8	0	0	4	0
Auxiliary Signal Groups												
Lead / Lag	-	-	-	-	-	-	-	-	-	-	-	-

Movement, Approach, & Intersection Results

V/C, Movement V/C Ratio	0.03	0.21	0.10	0.03	0.15	0.15	0.12	0.35	0.35	0.06	0.09	0.09
Intersection LOS	C											
Intersection V/C	0.746											

Intersection Level Of Service Report
Intersection 30: Azusa Avenue (NS) at I-210 EB Ramps (EW)

Control Type:	Signalized	Delay (sec / veh):	-
Analysis Method:	ICU 1	Level Of Service:	B
Analysis Period:	15 minutes	Volume to Capacity (v/c):	0.670

Intersection Setup

Name	Azusa Avenue		Azusa Avenue		I-210 EB Ramps	
Approach	Northbound		Southbound		Eastbound	
Lane Configuration						
Turning Movement	Left	Thru	Thru	Right	Left	Right
Lane Width [ft]	12.00	12.00	12.00	12.00	12.00	12.00
No. of Lanes in Pocket	0	0	0	0	0	0
Pocket Length [ft]	100.00	100.00	100.00	100.00	100.00	100.00
Speed [mph]	35.00		35.00		35.00	
Grade [%]	0.00		0.00		0.00	
Crosswalk	No		No		Yes	

Volumes

Name	Azusa Avenue		Azusa Avenue		I-210 EB Ramps	
Base Volume Input [veh/h]	0	1131	795	0	131	321
Base Volume Adjustment Factor	1.0000	1.0000	1.0000	1.0000	1.0000	1.0000
Heavy Vehicles Percentage [%]	2.00	2.00	2.00	2.00	2.00	2.00
Growth Rate	1.00	1.00	1.00	1.00	1.00	1.00
In-Process Volume [veh/h]	0	0	0	0	0	0
Site-Generated Trips [veh/h]	0	52	8	0	0	0
Diverted Trips [veh/h]	0	0	0	0	0	0
Pass-by Trips [veh/h]	0	0	0	0	0	0
Existing Site Adjustment Volume [veh/h]	0	0	0	0	0	0
Other Volume [veh/h]	0	0	0	0	0	0
Total Hourly Volume [veh/h]	0	1183	803	0	131	321
Peak Hour Factor	1.0000	1.0000	1.0000	1.0000	1.0000	1.0000
Other Adjustment Factor	1.0000	1.0000	1.0000	1.0000	1.0000	1.0000
Total 15-Minute Volume [veh/h]	0	296	201	0	33	80
Total Analysis Volume [veh/h]	0	1183	803	0	131	321
Pedestrian Volume [ped/h]	0		0		0	
Bicycle Volume [bicycles/h]	0		0		0	

Intersection Settings

Cycle Length [s]	100
Lost time [s]	10.00

Phasing & Timing

Control Type	Permissive	Permissive	Permissive	Permissive	Split	Split
Signal group	0	2	6	0	3	0
Auxiliary Signal Groups						
Lead / Lag	-	-	-	-	Lead	-

Movement, Approach, & Intersection Results

V/C, Movement V/C Ratio	0.00	0.37	0.25	0.00	0.04	0.20
Intersection LOS	B					
Intersection V/C	0.670					

Intersection Level Of Service Report

Intersection 31: Azusa Avenue (NS) at Paramount Street (EW)

Control Type:	Signalized	Delay (sec / veh):	-
Analysis Method:	ICU 1	Level Of Service:	B
Analysis Period:	15 minutes	Volume to Capacity (v/c):	0.633

Intersection Setup

Name	Azusa Avenue			Azusa Avenue			Paramount Street			Paramount Street		
Approach	Northbound			Southbound			Eastbound			Westbound		
Lane Configuration												
Turning Movement	Left	Thru	Right	Left	Thru	Right	Left	Thru	Right	Left	Thru	Right
Lane Width [ft]	12.00	12.00	12.00	12.00	12.00	12.00	12.00	12.00	12.00	12.00	12.00	12.00
No. of Lanes in Pocket	1	0	0	1	0	0	0	0	0	0	0	0
Pocket Length [ft]	200.00	100.00	100.00	110.00	100.00	100.00	100.00	100.00	100.00	100.00	100.00	100.00
Speed [mph]	35.00			35.00			25.00			15.00		
Grade [%]	0.00			0.00			0.00			0.00		
Crosswalk	No			Yes			Yes			Yes		

Volumes

Name	Azusa Avenue			Azusa Avenue			Paramount Street			Paramount Street		
Base Volume Input [veh/h]	91	923	4	27	966	51	170	1	87	17	7	36
Base Volume Adjustment Factor	1.0000	1.0000	1.0000	1.0000	1.0000	1.0000	1.0000	1.0000	1.0000	1.0000	1.0000	1.0000
Heavy Vehicles Percentage [%]	2.00	2.00	2.00	2.00	2.00	2.00	2.00	2.00	2.00	2.00	2.00	2.00
Growth Rate	1.00	1.00	1.00	1.00	1.00	1.00	1.00	1.00	1.00	1.00	1.00	1.00
In-Process Volume [veh/h]	0	0	0	0	0	0	0	0	0	0	0	0
Site-Generated Trips [veh/h]	0	52	0	0	8	0	0	0	0	0	0	0
Diverted Trips [veh/h]	0	0	0	0	0	0	0	0	0	0	0	0
Pass-by Trips [veh/h]	0	0	0	0	0	0	0	0	0	0	0	0
Existing Site Adjustment Volume [veh/h]	0	0	0	0	0	0	0	0	0	0	0	0
Other Volume [veh/h]	0	0	0	0	0	0	0	0	0	0	0	0
Total Hourly Volume [veh/h]	91	975	4	27	974	51	170	1	87	17	7	36
Peak Hour Factor	1.0000	1.0000	1.0000	1.0000	1.0000	1.0000	1.0000	1.0000	1.0000	1.0000	1.0000	1.0000
Other Adjustment Factor	1.0000	1.0000	1.0000	1.0000	1.0000	1.0000	1.0000	1.0000	1.0000	1.0000	1.0000	1.0000
Total 15-Minute Volume [veh/h]	23	244	1	7	244	13	43	0	22	4	2	9
Total Analysis Volume [veh/h]	91	975	4	27	974	51	170	1	87	17	7	36
Pedestrian Volume [ped/h]	0			0			0			0		
Bicycle Volume [bicycles/h]	0			0			0			0		

Intersection Settings

Cycle Length [s]	100
Lost time [s]	10.00

Phasing & Timing

Control Type	Permiss	Permiss	Permiss	Permiss	Permiss	Permiss	Permiss	Permiss	Permiss	Permiss	Permiss	Permiss
Signal group	0	2	0	0	6	0	0	8	0	0	4	0
Auxiliary Signal Groups												
Lead / Lag	-	-	-	-	-	-	-	-	-	-	-	-

Movement, Approach, & Intersection Results

V/C, Movement V/C Ratio	0.06	0.30	0.00	0.02	0.30	0.03	0.11	0.16	0.16	0.01	0.04	0.04
Intersection LOS	B											
Intersection V/C	0.633											

Intersection Level Of Service Report
Intersection 32: Azusa Avenue (NS) at Gladstone Street (EW)

Control Type:	Signalized	Delay (sec / veh):	-
Analysis Method:	ICU 1	Level Of Service:	C
Analysis Period:	15 minutes	Volume to Capacity (v/c):	0.736

Intersection Setup

Name	Azusa Avenue			Azusa Avenue			Gladstone Street			Gladstone Street		
Approach	Northbound			Southbound			Eastbound			Westbound		
Lane Configuration												
Turning Movement	Left	Thru	Right	Left	Thru	Right	Left	Thru	Right	Left	Thru	Right
Lane Width [ft]	12.00	12.00	12.00	12.00	12.00	12.00	12.00	12.00	12.00	12.00	12.00	12.00
No. of Lanes in Pocket	1	0	1	2	0	0	1	0	0	1	0	0
Pocket Length [ft]	190.00	100.00	190.00	190.00	100.00	100.00	150.00	100.00	100.00	150.00	100.00	100.00
Speed [mph]	35.00			35.00			40.00			40.00		
Grade [%]	0.00			0.00			0.00			0.00		
Crosswalk	Yes			Yes			Yes			Yes		

Volumes

Name	Azusa Avenue			Azusa Avenue			Gladstone Street			Gladstone Street		
Base Volume Input [veh/h]	79	668	150	214	716	57	212	762	79	122	287	73
Base Volume Adjustment Factor	1.0000	1.0000	1.0000	1.0000	1.0000	1.0000	1.0000	1.0000	1.0000	1.0000	1.0000	1.0000
Heavy Vehicles Percentage [%]	2.00	2.00	2.00	2.00	2.00	2.00	2.00	2.00	2.00	2.00	2.00	2.00
Growth Rate	1.00	1.00	1.00	1.00	1.00	1.00	1.00	1.00	1.00	1.00	1.00	1.00
In-Process Volume [veh/h]	0	0	0	0	0	0	0	0	0	0	0	0
Site-Generated Trips [veh/h]	0	0	0	0	0	8	52	12	0	0	2	0
Diverted Trips [veh/h]	0	0	0	0	0	0	0	0	0	0	0	0
Pass-by Trips [veh/h]	0	0	0	0	0	0	0	0	0	0	0	0
Existing Site Adjustment Volume [veh/h]	0	0	0	0	0	0	0	0	0	0	0	0
Other Volume [veh/h]	0	0	0	0	0	0	0	0	0	0	0	0
Total Hourly Volume [veh/h]	79	668	150	214	716	65	264	774	79	122	289	73
Peak Hour Factor	1.0000	1.0000	1.0000	1.0000	1.0000	1.0000	1.0000	1.0000	1.0000	1.0000	1.0000	1.0000
Other Adjustment Factor	1.0000	1.0000	1.0000	1.0000	1.0000	1.0000	1.0000	1.0000	1.0000	1.0000	1.0000	1.0000
Total 15-Minute Volume [veh/h]	20	167	38	54	179	16	66	194	20	31	72	18
Total Analysis Volume [veh/h]	79	668	150	214	716	65	264	774	79	122	289	73
Pedestrian Volume [ped/h]	0			0			0			0		
Bicycle Volume [bicycles/h]	0			0			0			0		

Intersection Settings

Cycle Length [s]	100
Lost time [s]	10.00

Phasing & Timing

Control Type	Protecte	Permiss	Overlap	Protecte	Permiss	Permiss	Protecte	Permiss	Permiss	Protecte	Permiss	Permiss
Signal group	5	2	2	1	6	0	3	8	0	7	4	0
Auxiliary Signal Groups			2,7									
Lead / Lag	Lead	-	-	Lead	-	-	Lead	-	-	Lead	-	-

Movement, Approach, & Intersection Results

V/C, Movement V/C Ratio	0.05	0.21	0.02	0.07	0.24	0.24	0.17	0.27	0.27	0.08	0.11	0.11
Intersection LOS	C											
Intersection V/C	0.736											

Intersection Level Of Service Report

Intersection 33: San Gabriel Ave/Azusa Ave (NS) at 1st St (EW)

Control Type:	Signalized	Delay (sec / veh):	-
Analysis Method:	ICU 1	Level Of Service:	B
Analysis Period:	15 minutes	Volume to Capacity (v/c):	0.661

Intersection Setup

Name												
Approach	Northbound			Southbound			Eastbound			Westbound		
Lane Configuration												
Turning Movement	Left	Thru	Right	Left	Thru	Right	Left	Thru	Right	Left	Thru	Right
Lane Width [ft]	12.00	12.00	12.00	12.00	12.00	12.00	12.00	12.00	12.00	12.00	12.00	12.00
No. of Lanes in Pocket	0	0	0	0	0	0	0	0	0	0	0	0
Pocket Length [ft]	100.00	100.00	100.00	100.00	100.00	100.00	100.00	100.00	100.00	100.00	100.00	100.00
Speed [mph]	35.00			35.00			35.00			35.00		
Grade [%]	0.00			0.00			0.00			0.00		
Crosswalk	No			Yes			Yes			Yes		

Volumes

Name												
Base Volume Input [veh/h]	78	505	330	117	837	20	72	175	85	288	164	148
Base Volume Adjustment Factor	1.0000	1.0000	1.0000	1.0000	1.0000	1.0000	1.0000	1.0000	1.0000	1.0000	1.0000	1.0000
Heavy Vehicles Percentage [%]	2.00	2.00	2.00	2.00	2.00	2.00	2.00	2.00	2.00	2.00	2.00	2.00
Growth Rate	1.04	1.04	1.04	1.04	1.04	1.04	1.04	1.04	1.04	1.04	1.04	1.04
In-Process Volume [veh/h]	0	0	0	0	0	0	0	0	0	0	0	0
Site-Generated Trips [veh/h]	0	0	0	0	0	0	0	0	0	8	0	0
Diverted Trips [veh/h]	0	0	0	0	0	0	0	0	0	0	0	0
Pass-by Trips [veh/h]	0	0	0	0	0	0	0	0	0	0	0	0
Existing Site Adjustment Volume [veh/h]	0	0	0	0	0	0	0	0	0	0	0	0
Other Volume [veh/h]	0	0	0	0	0	0	0	0	0	0	0	0
Total Hourly Volume [veh/h]	81	525	343	122	870	21	75	182	88	308	171	154
Peak Hour Factor	0.9690	0.9690	0.9690	0.9690	0.9690	0.9690	0.9690	0.9690	0.9690	0.9690	0.9690	0.9690
Other Adjustment Factor	1.0000	1.0000	1.0000	1.0000	1.0000	1.0000	1.0000	1.0000	1.0000	1.0000	1.0000	1.0000
Total 15-Minute Volume [veh/h]	21	135	88	31	224	5	19	47	23	79	44	40
Total Analysis Volume [veh/h]	84	542	354	126	898	22	77	188	91	318	176	159
Pedestrian Volume [ped/h]	0			0			0			0		
Bicycle Volume [bicycles/h]	0			0			0			0		

Intersection Settings

Cycle Length [s]	100
Lost time [s]	10.00

Phasing & Timing

Control Type	Protecte	Permiss	Permiss	Protecte	Permiss	Permiss	Protecte	Permiss	Permiss	Protecte	Permiss	Permiss
Signal group	5	2	0	1	6	0	3	8	0	7	4	0
Auxiliary Signal Groups												
Lead / Lag	Lead	-	-	Lead	-	-	Lead	-	-	Lead	-	-

Movement, Approach, & Intersection Results

V/C, Movement V/C Ratio	0.05	0.17	0.22	0.08	0.28	0.01	0.05	0.12	0.06	0.10	0.10	0.10
Intersection LOS	B											
Intersection V/C	0.661											

Intersection Level Of Service Report

Intersection 34: Alameda Ave/I-210 WB Ramps (NS) at 1st St (EW)

Control Type:	Signalized	Delay (sec / veh):	-
Analysis Method:	ICU 1	Level Of Service:	B
Analysis Period:	15 minutes	Volume to Capacity (v/c):	0.692

Intersection Setup

Name												
Approach	Northbound			Southbound			Eastbound			Westbound		
Lane Configuration												
Turning Movement	Left	Thru	Right	Left	Thru	Right	Left	Thru	Right	Left	Thru	Right
Lane Width [ft]	12.00	12.00	12.00	12.00	12.00	12.00	12.00	12.00	12.00	12.00	12.00	12.00
No. of Lanes in Pocket	1	0	0	1	0	1	1	0	1	1	0	1
Pocket Length [ft]	365.00	100.00	100.00	50.00	100.00	250.00	50.00	100.00	100.00	100.00	100.00	100.00
Speed [mph]	35.00			35.00			35.00			35.00		
Grade [%]	0.00			0.00			0.00			0.00		
Crosswalk	Yes			Yes			Yes			Yes		

Volumes

Name												
Base Volume Input [veh/h]	366	87	94	46	24	38	20	604	207	177	305	43
Base Volume Adjustment Factor	1.0000	1.0000	1.0000	1.0000	1.0000	1.0000	1.0000	1.0000	1.0000	1.0000	1.0000	1.0000
Heavy Vehicles Percentage [%]	2.00	2.00	2.00	2.00	2.00	2.00	2.00	2.00	2.00	2.00	2.00	2.00
Growth Rate	1.00	1.00	1.00	1.00	1.00	1.00	1.00	1.00	1.00	1.00	1.00	1.00
In-Process Volume [veh/h]	0	0	0	0	0	0	0	0	0	0	0	0
Site-Generated Trips [veh/h]	8	0	0	0	0	0	0	0	0	0	0	0
Diverted Trips [veh/h]	0	0	0	0	0	0	0	0	0	0	0	0
Pass-by Trips [veh/h]	0	0	0	0	0	0	0	0	0	0	0	0
Existing Site Adjustment Volume [veh/h]	0	0	0	0	0	0	0	0	0	0	0	0
Other Volume [veh/h]	0	0	0	0	0	0	0	0	0	0	0	0
Total Hourly Volume [veh/h]	374	87	94	46	24	38	20	604	207	177	305	43
Peak Hour Factor	0.9400	0.9400	0.9400	0.9400	0.9400	0.9400	0.9400	0.9400	0.9400	0.9400	0.9400	0.9400
Other Adjustment Factor	1.0000	1.0000	1.0000	1.0000	1.0000	1.0000	1.0000	1.0000	1.0000	1.0000	1.0000	1.0000
Total 15-Minute Volume [veh/h]	99	23	25	12	6	10	5	161	55	47	81	11
Total Analysis Volume [veh/h]	398	93	100	49	26	40	21	643	220	188	324	46
Pedestrian Volume [ped/h]	0			0			0			0		
Bicycle Volume [bicycles/h]	0			0			0			0		

Intersection Settings

Cycle Length [s]	100
Lost time [s]	10.00

Phasing & Timing

Control Type	Permiss	Permiss	Permiss	Permiss	Permiss	Permiss	Permiss	Permiss	Permiss	Permiss	Permiss	Permiss
Signal group	0	2	0	0	6	0	0	8	0	0	4	0
Auxiliary Signal Groups												
Lead / Lag	-	-	-	-	-	-	-	-	-	-	-	-

Movement, Approach, & Intersection Results

V/C, Movement V/C Ratio	0.25	0.12	0.12	0.03	0.02	0.03	0.01	0.20	0.14	0.12	0.20	0.03
Intersection LOS	B											
Intersection V/C	0.692											

EXISTING PLUS PROJECT – WITH IMPROVEMENTS

Vincent Avenue Industrial Building

Vistro File: G:\...\AM.vistro
Report File: G:\...\EP AM IMP.pdf

Scenario 3 Existing Plus Project With Improvements
5/6/2020

Intersection Analysis Summary

ID	Intersection Name	Control Type	Method	Worst Mvmt	V/C	Delay (s/veh)	LOS
2	I-605 NB Ramps (NS) at Live Oak Avenue (EW)	Signalized	ICU 1	WB Thru	0.795	-	C
9	Santa Fe Dam/Azusa Canyon Road (NS) at Arrow Highway (EW)	Signalized	ICU 1	WB Thru	0.751	-	C
17	Vincent Avenue (NS) at Gladstone Street (EW)	Signalized	ICU 1	WB Right	0.526	-	A
34	Alameda Ave/I-210 WB Ramps NS) at 1st St (EW)	Signalized	ICU 1	WB Thru	0.742	-	C

V/C, Delay, LOS: For two-way stop, these values are taken from the movement with the worst (highest) delay value. For all other control types, they are taken for the whole intersection.

Intersection Level Of Service Report
Intersection 2: I-605 NB Ramps (NS) at Live Oak Avenue (EW)

Control Type:	Signalized	Delay (sec / veh):	-
Analysis Method:	ICU 1	Level Of Service:	C
Analysis Period:	15 minutes	Volume to Capacity (v/c):	0.795

Intersection Setup

Name	I-605 NB Ramps			I-605 NB Ramps			Live Oak Avenue			Live Oak Avenue		
Approach	Northbound			Southbound			Eastbound			Westbound		
Lane Configuration												
Turning Movement	Left	Thru	Right	Left	Thru	Right	Left	Thru	Right	Left	Thru	Right
Lane Width [ft]	12.00	12.00	12.00	12.00	12.00	12.00	12.00	12.00	12.00	12.00	12.00	12.00
No. of Lanes in Pocket	0	0	0	0	0	0	0	0	0	0	0	0
Pocket Length [ft]	100.00	100.00	100.00	100.00	100.00	100.00	100.00	100.00	100.00	100.00	100.00	100.00
Speed [mph]	35.00			35.00			45.00			45.00		
Grade [%]	0.00			0.00			0.00			0.00		
Crosswalk	Yes			Yes			No			No		

Volumes

Name	I-605 NB Ramps			I-605 NB Ramps			Live Oak Avenue			Live Oak Avenue		
Base Volume Input [veh/h]	0	0	469	0	0	432	0	262	0	0	1205	0
Base Volume Adjustment Factor	1.0000	1.0000	1.0000	1.0000	1.0000	1.0000	1.0000	1.0000	1.0000	1.0000	1.0000	1.0000
Heavy Vehicles Percentage [%]	2.00	2.00	2.00	2.00	2.00	2.00	2.00	2.00	2.00	2.00	2.00	2.00
Growth Rate	1.00	1.00	1.00	1.00	1.00	1.00	1.00	1.00	1.00	1.00	1.00	1.00
In-Process Volume [veh/h]	0	0	0	0	0	0	0	0	0	0	0	0
Site-Generated Trips [veh/h]	0	0	105	0	0	0	0	0	0	0	14	0
Diverted Trips [veh/h]	0	0	0	0	0	0	0	0	0	0	0	0
Pass-by Trips [veh/h]	0	0	0	0	0	0	0	0	0	0	0	0
Existing Site Adjustment Volume [veh/h]	0	0	0	0	0	0	0	0	0	0	0	0
Other Volume [veh/h]	0	0	0	0	0	0	0	0	0	0	0	0
Total Hourly Volume [veh/h]	0	0	574	0	0	432	0	262	0	0	1219	0
Peak Hour Factor	1.0000	1.0000	1.0000	1.0000	1.0000	1.0000	1.0000	1.0000	1.0000	1.0000	1.0000	1.0000
Other Adjustment Factor	1.0000	1.0000	1.0000	1.0000	1.0000	1.0000	1.0000	1.0000	1.0000	1.0000	1.0000	1.0000
Total 15-Minute Volume [veh/h]	0	0	144	0	0	108	0	66	0	0	305	0
Total Analysis Volume [veh/h]	0	0	574	0	0	432	0	262	0	0	1219	0
Pedestrian Volume [ped/h]	0			0			0			0		
Bicycle Volume [bicycles/h]	0			0			0			0		

Intersection Settings

Cycle Length [s]	100
Lost time [s]	10.00

Phasing & Timing

Control Type	Permiss	Permiss	Permiss	Permiss	Permiss	Permiss	Permiss	Permiss	Permiss	Permiss	Permiss	Permiss
Signal group	0	0	2	0	0	6	0	8	0	0	4	0
Auxiliary Signal Groups												
Lead / Lag	-	-	-	-	-	-	-	-	-	-	-	-

Movement, Approach, & Intersection Results

V/C, Movement V/C Ratio	0.00	0.00	0.18	0.00	0.00	0.14	0.00	0.08	0.00	0.00	0.38	0.00
Intersection LOS	C											
Intersection V/C	0.795											

Intersection Level Of Service Report

Intersection 9: Santa Fe Dam/Azusa Canyon Road (NS) at Arrow Highway (EW)

Control Type:	Signalized	Delay (sec / veh):	-
Analysis Method:	ICU 1	Level Of Service:	C
Analysis Period:	15 minutes	Volume to Capacity (v/c):	0.751

Intersection Setup

Name	Azusa Canyon Road						Arrow Highway			Arrow Highway		
Approach	Northbound			Southbound			Eastbound			Westbound		
Lane Configuration												
Turning Movement	Left	Thru	Right	Left	Thru	Right	Left	Thru	Right	Left	Thru	Right
Lane Width [ft]	12.00	12.00	12.00	12.00	12.00	12.00	12.00	12.00	12.00	12.00	12.00	12.00
No. of Lanes in Pocket	1	0	0	0	0	0	1	0	0	1	0	0
Pocket Length [ft]	200.00	100.00	100.00	100.00	100.00	100.00	185.00	100.00	100.00	180.00	100.00	100.00
Speed [mph]	35.00			35.00			45.00			45.00		
Grade [%]	0.00			0.00			0.00			0.00		
Crosswalk	Yes			Yes			No			Yes		

Volumes

Name	Azusa Canyon Road						Arrow Highway			Arrow Highway		
Base Volume Input [veh/h]	837	14	145	11	3	12	19	624	122	67	1708	23
Base Volume Adjustment Factor	1.0000	1.0000	1.0000	1.0000	1.0000	1.0000	1.0000	1.0000	1.0000	1.0000	1.0000	1.0000
Heavy Vehicles Percentage [%]	2.00	2.00	2.00	2.00	2.00	2.00	2.00	2.00	2.00	2.00	2.00	2.00
Growth Rate	1.00	1.00	1.00	1.00	1.00	1.00	1.00	1.00	1.00	1.00	1.00	1.00
In-Process Volume [veh/h]	0	0	0	0	0	0	0	0	0	0	0	0
Site-Generated Trips [veh/h]	0	0	8	0	0	0	0	126	0	1	17	0
Diverted Trips [veh/h]	0	0	0	0	0	0	0	0	0	0	0	0
Pass-by Trips [veh/h]	0	0	0	0	0	0	0	0	0	0	0	0
Existing Site Adjustment Volume [veh/h]	0	0	0	0	0	0	0	0	0	0	0	0
Other Volume [veh/h]	0	0	0	0	0	0	0	0	0	0	0	0
Total Hourly Volume [veh/h]	837	14	153	11	3	12	19	750	122	68	1725	23
Peak Hour Factor	1.0000	1.0000	1.0000	1.0000	1.0000	1.0000	1.0000	1.0000	1.0000	1.0000	1.0000	1.0000
Other Adjustment Factor	1.0000	1.0000	1.0000	1.0000	1.0000	1.0000	1.0000	1.0000	1.0000	1.0000	1.0000	1.0000
Total 15-Minute Volume [veh/h]	209	4	38	3	1	3	5	188	31	17	431	6
Total Analysis Volume [veh/h]	837	14	153	11	3	12	19	750	122	68	1725	23
Pedestrian Volume [ped/h]	0			0			0			0		
Bicycle Volume [bicycles/h]	0			0			0			0		

Intersection Settings

Cycle Length [s]	100
Lost time [s]	10.00

Phasing & Timing

Control Type	Split	Split	Split	Split	Split	Split	Protecte	Permiss	Permiss	Protecte	Permiss	Permiss
Signal group	0	2	0	0	6	0	3	8	0	7	4	0
Auxiliary Signal Groups												
Lead / Lag	-	-	-	-	-	-	Lead	-	-	Lead	-	-

Movement, Approach, & Intersection Results

V/C, Movement V/C Ratio	0.26	0.21	0.21	0.01	0.01	0.01	0.01	0.18	0.18	0.04	0.36	0.36
Intersection LOS	C											
Intersection V/C	0.751											

Intersection Level Of Service Report
Intersection 17: Vincent Avenue (NS) at Gladstone Street (EW)

Control Type:	Signalized	Delay (sec / veh):	-
Analysis Method:	ICU 1	Level Of Service:	A
Analysis Period:	15 minutes	Volume to Capacity (v/c):	0.526

Intersection Setup

Name	Vincent Avenue			Vincent Avenue			Gladstone Street			Gladstone Street		
Approach	Northbound			Southbound			Eastbound			Westbound		
Lane Configuration												
Turning Movement	Left	Thru	Right	Left	Thru	Right	Left	Thru	Right	Left	Thru	Right
Lane Width [ft]	12.00	12.00	12.00	12.00	12.00	12.00	12.00	12.00	12.00	12.00	12.00	12.00
No. of Lanes in Pocket	1	0	0	0	0	0	2	0	0	1	0	0
Pocket Length [ft]	195.00	100.00	100.00	100.00	100.00	100.00	230.00	100.00	100.00	175.00	100.00	100.00
Speed [mph]	45.00			25.00			45.00			45.00		
Grade [%]	0.00			0.00			0.00			0.00		
Crosswalk	Yes			Yes			No			Yes		

Volumes

Name	Vincent Avenue			Vincent Avenue			Gladstone Street			Gladstone Street		
Base Volume Input [veh/h]	265	29	147	16	8	38	43	97	64	178	942	2
Base Volume Adjustment Factor	1.0000	1.0000	1.0000	1.0000	1.0000	1.0000	1.0000	1.0000	1.0000	1.0000	1.0000	1.0000
Heavy Vehicles Percentage [%]	2.00	2.00	2.00	2.00	2.00	2.00	2.00	2.00	2.00	2.00	2.00	2.00
Growth Rate	1.00	1.00	1.00	1.00	1.00	1.00	1.00	1.00	1.00	1.00	1.00	1.00
In-Process Volume [veh/h]	0	0	0	0	0	0	0	0	0	0	0	0
Site-Generated Trips [veh/h]	8	0	14	0	0	0	0	0	64	102	0	0
Diverted Trips [veh/h]	0	0	0	0	0	0	0	0	0	0	0	0
Pass-by Trips [veh/h]	0	0	0	0	0	0	0	0	0	0	0	0
Existing Site Adjustment Volume [veh/h]	0	0	0	0	0	0	0	0	0	0	0	0
Other Volume [veh/h]	0	0	0	0	0	0	0	0	0	0	0	0
Total Hourly Volume [veh/h]	273	29	161	16	8	38	43	97	128	280	942	2
Peak Hour Factor	1.0000	1.0000	1.0000	1.0000	1.0000	1.0000	1.0000	1.0000	1.0000	1.0000	1.0000	1.0000
Other Adjustment Factor	1.0000	1.0000	1.0000	1.0000	1.0000	1.0000	1.0000	1.0000	1.0000	1.0000	1.0000	1.0000
Total 15-Minute Volume [veh/h]	68	7	40	4	2	10	11	24	32	70	236	1
Total Analysis Volume [veh/h]	273	29	161	16	8	38	43	97	128	280	942	2
Pedestrian Volume [ped/h]	0			0			0			0		
Bicycle Volume [bicycles/h]	0			0			0			0		

Intersection Settings

Cycle Length [s]	100
Lost time [s]	10.00

Phasing & Timing

Control Type	Split	Split	Split	Split	Split	Split	Protecte	Permiss	Permiss	Protecte	Permiss	Permiss
Signal group	0	2	0	0	6	0	3	8	0	7	4	0
Auxiliary Signal Groups												
Lead / Lag	-	-	-	-	-	-	Lead	-	-	Lead	-	-

Movement, Approach, & Intersection Results

V/C, Movement V/C Ratio	0.09	0.10	0.10	0.01	0.03	0.03	0.01	0.07	0.07	0.18	0.30	0.30
Intersection LOS	A											
Intersection V/C	0.526											

Intersection Level Of Service Report
Intersection 34: Alameda Ave/I-210 WB Ramps NS) at 1st St (EW)

Control Type:	Signalized	Delay (sec / veh):	-
Analysis Method:	ICU 1	Level Of Service:	C
Analysis Period:	15 minutes	Volume to Capacity (v/c):	0.742

Intersection Setup

Name											
Approach	Northbound			Southbound			Eastbound			Westbound		
Lane Configuration												
Turning Movement	Left	Thru	Right	Left	Thru	Right	Left	Thru	Right	Left	Thru	Right
Lane Width [ft]	12.00	12.00	12.00	12.00	12.00	12.00	12.00	12.00	12.00	12.00	12.00	12.00
No. of Lanes in Pocket	1	0	0	1	0	1	1	0	1	1	0	1
Pocket Length [ft]	325.00	100.00	100.00	50.00	100.00	250.00	50.00	100.00	100.00	100.00	100.00	110.00
Speed [mph]	35.00			35.00			35.00			35.00		
Grade [%]	0.00			0.00			0.00			0.00		
Crosswalk	Yes			Yes			Yes			Yes		

Volumes

Name												
Base Volume Input [veh/h]	111	14	7	41	112	64	8	239	388	580	465	44
Base Volume Adjustment Factor	1.0000	1.0000	1.0000	1.0000	1.0000	1.0000	1.0000	1.0000	1.0000	1.0000	1.0000	1.0000
Heavy Vehicles Percentage [%]	2.00	2.00	2.00	2.00	2.00	2.00	2.00	2.00	2.00	2.00	2.00	2.00
Growth Rate	1.00	1.00	1.00	1.00	1.00	1.00	1.00	1.00	1.00	1.00	1.00	1.00
In-Process Volume [veh/h]	0	0	0	0	0	0	0	0	0	0	0	0
Site-Generated Trips [veh/h]	59	0	0	0	0	0	0	0	0	0	0	0
Diverted Trips [veh/h]	0	0	0	0	0	0	0	0	0	0	0	0
Pass-by Trips [veh/h]	0	0	0	0	0	0	0	0	0	0	0	0
Existing Site Adjustment Volume [veh/h]	0	0	0	0	0	0	0	0	0	0	0	0
Other Volume [veh/h]	0	0	0	0	0	0	0	0	0	0	0	0
Total Hourly Volume [veh/h]	170	14	7	41	112	64	8	239	388	580	465	44
Peak Hour Factor	0.9350	0.9350	0.9350	0.9350	0.9350	0.9350	0.9350	0.9350	0.9350	0.9350	0.9350	0.9350
Other Adjustment Factor	1.0000	1.0000	1.0000	1.0000	1.0000	1.0000	1.0000	1.0000	1.0000	1.0000	1.0000	1.0000
Total 15-Minute Volume [veh/h]	45	4	2	11	30	17	2	64	104	155	124	12
Total Analysis Volume [veh/h]	182	15	7	44	120	68	9	256	415	620	497	47
Pedestrian Volume [ped/h]	0			0			0			0		
Bicycle Volume [bicycles/h]	0			0			0			0		

Intersection Settings

Cycle Length [s]	100
Lost time [s]	10.00

Phasing & Timing

Control Type	Permiss	Permiss	Permiss	Permiss	Permiss	Permiss	Protecte	Permiss	Permiss	Protecte	Permiss	Permiss
Signal group	0	2	0	0	6	0	3	8	0	7	4	0
Auxiliary Signal Groups												
Lead / Lag	-	-	-	-	-	-	Lead	-	-	Lead	-	-

Movement, Approach, & Intersection Results

V/C, Movement V/C Ratio	0.11	0.01	0.01	0.03	0.08	0.04	0.01	0.08	0.26	0.19	0.31	0.03
Intersection LOS	C											
Intersection V/C	0.742											

Vincent Avenue Industrial Building

Vistro File: G:\...\PM.vistro
Report File: G:\...\EP PM IMP.pdf

Scenario 3 Existing Plus Project With Improvements
5/6/2020

Intersection Analysis Summary

ID	Intersection Name	Control Type	Method	Worst Mvmt	V/C	Delay (s/veh)	LOS
2	I-605 NB Ramps (NS) at Live Oak Avenue (EW)	Signalized	ICU 1	WB Thru	0.786	-	C
9	Santa Fe Dam/Azusa Canyon Road (NS) at Arrow Highway (EW)	Signalized	ICU 1	EB Thru	0.649	-	B
17	Vincent Avenue (NS) at Gladstone Street (EW)	Signalized	ICU 1	EB Thru	0.734	-	C
34	Alameda Ave/I-210 WB Ramps (NS) at 1st St (EW)	Signalized	ICU 1	NB Left	0.633	-	B

V/C, Delay, LOS: For two-way stop, these values are taken from the movement with the worst (highest) delay value. For all other control types, they are taken for the whole intersection.

Intersection Level Of Service Report
Intersection 2: I-605 NB Ramps (NS) at Live Oak Avenue (EW)

Control Type:	Signalized	Delay (sec / veh):	-
Analysis Method:	ICU 1	Level Of Service:	C
Analysis Period:	15 minutes	Volume to Capacity (v/c):	0.786

Intersection Setup

Name	I-605 NB Ramps			I-605 NB Ramps			Live Oak Avenue			Live Oak Avenue		
Approach	Northbound			Southbound			Eastbound			Westbound		
Lane Configuration												
Turning Movement	Left	Thru	Right	Left	Thru	Right	Left	Thru	Right	Left	Thru	Right
Lane Width [ft]	12.00	12.00	12.00	12.00	12.00	12.00	12.00	12.00	12.00	12.00	12.00	12.00
No. of Lanes in Pocket	0	0	0	0	0	0	0	0	0	0	0	0
Pocket Length [ft]	100.00	100.00	100.00	100.00	100.00	100.00	100.00	100.00	100.00	100.00	100.00	100.00
Speed [mph]	35.00			35.00			45.00			45.00		
Grade [%]	0.00			0.00			0.00			0.00		
Crosswalk	Yes			Yes			No			No		

Volumes

Name	I-605 NB Ramps			I-605 NB Ramps			Live Oak Avenue			Live Oak Avenue		
Base Volume Input [veh/h]	0	0	621	0	0	523	0	1012	0	0	944	0
Base Volume Adjustment Factor	1.0000	1.0000	1.0000	1.0000	1.0000	1.0000	1.0000	1.0000	1.0000	1.0000	1.0000	1.0000
Heavy Vehicles Percentage [%]	2.00	2.00	2.00	2.00	2.00	2.00	2.00	2.00	2.00	2.00	2.00	2.00
Growth Rate	1.00	1.00	1.00	1.00	1.00	1.00	1.00	1.00	1.00	1.00	1.00	1.00
In-Process Volume [veh/h]	0	0	0	0	0	0	0	0	0	0	0	0
Site-Generated Trips [veh/h]	0	0	14	0	0	0	0	0	0	0	93	0
Diverted Trips [veh/h]	0	0	0	0	0	0	0	0	0	0	0	0
Pass-by Trips [veh/h]	0	0	0	0	0	0	0	0	0	0	0	0
Existing Site Adjustment Volume [veh/h]	0	0	0	0	0	0	0	0	0	0	0	0
Other Volume [veh/h]	0	0	0	0	0	0	0	0	0	0	0	0
Total Hourly Volume [veh/h]	0	0	635	0	0	523	0	1012	0	0	1037	0
Peak Hour Factor	1.0000	1.0000	1.0000	1.0000	1.0000	1.0000	1.0000	1.0000	1.0000	1.0000	1.0000	1.0000
Other Adjustment Factor	1.0000	1.0000	1.0000	1.0000	1.0000	1.0000	1.0000	1.0000	1.0000	1.0000	1.0000	1.0000
Total 15-Minute Volume [veh/h]	0	0	159	0	0	131	0	253	0	0	259	0
Total Analysis Volume [veh/h]	0	0	635	0	0	523	0	1012	0	0	1037	0
Pedestrian Volume [ped/h]	0			0			0			0		
Bicycle Volume [bicycles/h]	0			0			0			0		

Intersection Settings

Cycle Length [s]	100
Lost time [s]	10.00

Phasing & Timing

Control Type	Permiss	Permiss	Permiss	Permiss	Permiss	Permiss	Permiss	Permiss	Permiss	Permiss	Permiss	Permiss
Signal group	0	0	2	0	0	6	0	8	0	0	4	0
Auxiliary Signal Groups												
Lead / Lag	-	-	-	-	-	-	-	-	-	-	-	-

Movement, Approach, & Intersection Results

V/C, Movement V/C Ratio	0.00	0.00	0.20	0.00	0.00	0.16	0.00	0.32	0.00	0.00	0.32	0.00
Intersection LOS	C											
Intersection V/C	0.786											

Intersection Level Of Service Report

Intersection 9: Santa Fe Dam/Azusa Canyon Road (NS) at Arrow Highway (EW)

Control Type:	Signalized	Delay (sec / veh):	-
Analysis Method:	ICU 1	Level Of Service:	B
Analysis Period:	15 minutes	Volume to Capacity (v/c):	0.649

Intersection Setup

Name	Azusa Canyon Road						Arrow Highway			Arrow Highway		
Approach	Northbound			Southbound			Eastbound			Westbound		
Lane Configuration												
Turning Movement	Left	Thru	Right	Left	Thru	Right	Left	Thru	Right	Left	Thru	Right
Lane Width [ft]	12.00	12.00	12.00	12.00	12.00	12.00	12.00	12.00	12.00	12.00	12.00	12.00
No. of Lanes in Pocket	1	0	0	0	0	0	1	0	0	1	0	0
Pocket Length [ft]	200.00	100.00	100.00	100.00	100.00	100.00	185.00	100.00	100.00	180.00	100.00	100.00
Speed [mph]	35.00			35.00			45.00			45.00		
Grade [%]	0.00			0.00			0.00			0.00		
Crosswalk	Yes			Yes			No			Yes		

Volumes

Name	Azusa Canyon Road						Arrow Highway			Arrow Highway		
Base Volume Input [veh/h]	120	5	442	15	13	29	14	1265	59	158	967	16
Base Volume Adjustment Factor	1.0000	1.0000	1.0000	1.0000	1.0000	1.0000	1.0000	1.0000	1.0000	1.0000	1.0000	1.0000
Heavy Vehicles Percentage [%]	2.00	2.00	2.00	2.00	2.00	2.00	2.00	2.00	2.00	2.00	2.00	2.00
Growth Rate	1.00	1.00	1.00	1.00	1.00	1.00	1.00	1.00	1.00	1.00	1.00	1.00
In-Process Volume [veh/h]	0	0	0	0	0	0	0	0	0	0	0	0
Site-Generated Trips [veh/h]	0	0	1	0	0	0	0	17	0	7	112	0
Diverted Trips [veh/h]	0	0	0	0	0	0	0	0	0	0	0	0
Pass-by Trips [veh/h]	0	0	0	0	0	0	0	0	0	0	0	0
Existing Site Adjustment Volume [veh/h]	0	0	0	0	0	0	0	0	0	0	0	0
Other Volume [veh/h]	0	0	0	0	0	0	0	0	0	0	0	0
Total Hourly Volume [veh/h]	120	5	443	15	13	29	14	1282	59	165	1079	16
Peak Hour Factor	1.0000	1.0000	1.0000	1.0000	1.0000	1.0000	1.0000	1.0000	1.0000	1.0000	1.0000	1.0000
Other Adjustment Factor	1.0000	1.0000	1.0000	1.0000	1.0000	1.0000	1.0000	1.0000	1.0000	1.0000	1.0000	1.0000
Total 15-Minute Volume [veh/h]	30	1	111	4	3	7	4	321	15	41	270	4
Total Analysis Volume [veh/h]	120	5	443	15	13	29	14	1282	59	165	1079	16
Pedestrian Volume [ped/h]	0			0			0			0		
Bicycle Volume [bicycles/h]	0			0			0			0		

Intersection Settings

Cycle Length [s]	100
Lost time [s]	10.00

Phasing & Timing

Control Type	Split	Split	Split	Split	Split	Split	Protecte	Permiss	Permiss	Protecte	Permiss	Permiss
Signal group	0	2	0	0	6	0	3	8	0	7	4	0
Auxiliary Signal Groups												
Lead / Lag	-	-	-	-	-	-	Lead	-	-	Lead	-	-

Movement, Approach, & Intersection Results

V/C, Movement V/C Ratio	0.04	0.12	0.12	0.01	0.03	0.03	0.01	0.28	0.28	0.10	0.23	0.23
Intersection LOS	B											
Intersection V/C	0.649											

Intersection Level Of Service Report

Intersection 17: Vincent Avenue (NS) at Gladstone Street (EW)

Control Type:	Signalized	Delay (sec / veh):	-
Analysis Method:	ICU 1	Level Of Service:	C
Analysis Period:	15 minutes	Volume to Capacity (v/c):	0.734

Intersection Setup

Name	Vincent Avenue			Vincent Avenue			Gladstone Street			Gladstone Street		
Approach	Northbound			Southbound			Eastbound			Westbound		
Lane Configuration												
Turning Movement	Left	Thru	Right	Left	Thru	Right	Left	Thru	Right	Left	Thru	Right
Lane Width [ft]	12.00	12.00	12.00	12.00	12.00	12.00	12.00	12.00	12.00	12.00	12.00	12.00
No. of Lanes in Pocket	1	0	0	0	0	0	2	0	0	1	0	0
Pocket Length [ft]	195.00	100.00	100.00	100.00	100.00	100.00	230.00	100.00	100.00	175.00	100.00	100.00
Speed [mph]	45.00			25.00			45.00			45.00		
Grade [%]	0.00			0.00			0.00			0.00		
Crosswalk	Yes			Yes			No			Yes		

Volumes

Name	Vincent Avenue			Vincent Avenue			Gladstone Street			Gladstone Street		
Base Volume Input [veh/h]	113	24	475	16	25	18	14	862	160	150	203	3
Base Volume Adjustment Factor	1.0000	1.0000	1.0000	1.0000	1.0000	1.0000	1.0000	1.0000	1.0000	1.0000	1.0000	1.0000
Heavy Vehicles Percentage [%]	2.00	2.00	2.00	2.00	2.00	2.00	2.00	2.00	2.00	2.00	2.00	2.00
Growth Rate	1.00	1.00	1.00	1.00	1.00	1.00	1.00	1.00	1.00	1.00	1.00	1.00
In-Process Volume [veh/h]	0	0	0	0	0	0	0	0	0	0	0	0
Site-Generated Trips [veh/h]	56	0	90	0	0	0	0	0	8	14	0	0
Diverted Trips [veh/h]	0	0	0	0	0	0	0	0	0	0	0	0
Pass-by Trips [veh/h]	0	0	0	0	0	0	0	0	0	0	0	0
Existing Site Adjustment Volume [veh/h]	0	0	0	0	0	0	0	0	0	0	0	0
Other Volume [veh/h]	0	0	0	0	0	0	0	0	0	0	0	0
Total Hourly Volume [veh/h]	169	24	565	16	25	18	14	862	168	164	203	3
Peak Hour Factor	1.0000	1.0000	1.0000	1.0000	1.0000	1.0000	1.0000	1.0000	1.0000	1.0000	1.0000	1.0000
Other Adjustment Factor	1.0000	1.0000	1.0000	1.0000	1.0000	1.0000	1.0000	1.0000	1.0000	1.0000	1.0000	1.0000
Total 15-Minute Volume [veh/h]	42	6	141	4	6	5	4	216	42	41	51	1
Total Analysis Volume [veh/h]	169	24	565	16	25	18	14	862	168	164	203	3
Pedestrian Volume [ped/h]	0			0			0			0		
Bicycle Volume [bicycles/h]	0			0			0			0		

Intersection Settings

Cycle Length [s]	100
Lost time [s]	10.00

Phasing & Timing

Control Type	Split	Split	Split	Split	Split	Split	Protecte	Permiss	Permiss	Protecte	Permiss	Permiss
Signal group	0	2	0	0	6	0	3	8	0	7	4	0
Auxiliary Signal Groups												
Lead / Lag	-	-	-	-	-	-	Lead	-	-	Lead	-	-

Movement, Approach, & Intersection Results

V/C, Movement V/C Ratio	0.05	0.16	0.16	0.01	0.03	0.03	0.00	0.32	0.32	0.10	0.06	0.06
Intersection LOS	C											
Intersection V/C	0.734											

Intersection Level Of Service Report
Intersection 34: Alameda Ave/I-210 WB Ramps (NS) at 1st St (EW)

Control Type:	Signalized	Delay (sec / veh):	-
Analysis Method:	ICU 1	Level Of Service:	B
Analysis Period:	15 minutes	Volume to Capacity (v/c):	0.633

Intersection Setup

Name												
Approach	Northbound			Southbound			Eastbound			Westbound		
Lane Configuration												
Turning Movement	Left	Thru	Right	Left	Thru	Right	Left	Thru	Right	Left	Thru	Right
Lane Width [ft]	12.00	12.00	12.00	12.00	12.00	12.00	12.00	12.00	12.00	12.00	12.00	12.00
No. of Lanes in Pocket	1	0	0	1	0	1	1	0	1	1	0	1
Pocket Length [ft]	365.00	100.00	100.00	50.00	100.00	250.00	50.00	100.00	100.00	100.00	100.00	100.00
Speed [mph]	35.00			35.00			35.00			35.00		
Grade [%]	0.00			0.00			0.00			0.00		
Crosswalk	Yes			Yes			Yes			Yes		

Volumes

Name												
Base Volume Input [veh/h]	366	87	94	46	24	38	20	604	207	177	305	43
Base Volume Adjustment Factor	1.0000	1.0000	1.0000	1.0000	1.0000	1.0000	1.0000	1.0000	1.0000	1.0000	1.0000	1.0000
Heavy Vehicles Percentage [%]	2.00	2.00	2.00	2.00	2.00	2.00	2.00	2.00	2.00	2.00	2.00	2.00
Growth Rate	1.00	1.00	1.00	1.00	1.00	1.00	1.00	1.00	1.00	1.00	1.00	1.00
In-Process Volume [veh/h]	0	0	0	0	0	0	0	0	0	0	0	0
Site-Generated Trips [veh/h]	8	0	0	0	0	0	0	0	0	0	0	0
Diverted Trips [veh/h]	0	0	0	0	0	0	0	0	0	0	0	0
Pass-by Trips [veh/h]	0	0	0	0	0	0	0	0	0	0	0	0
Existing Site Adjustment Volume [veh/h]	0	0	0	0	0	0	0	0	0	0	0	0
Other Volume [veh/h]	0	0	0	0	0	0	0	0	0	0	0	0
Total Hourly Volume [veh/h]	374	87	94	46	24	38	20	604	207	177	305	43
Peak Hour Factor	0.9400	0.9400	0.9400	0.9400	0.9400	0.9400	0.9400	0.9400	0.9400	0.9400	0.9400	0.9400
Other Adjustment Factor	1.0000	1.0000	1.0000	1.0000	1.0000	1.0000	1.0000	1.0000	1.0000	1.0000	1.0000	1.0000
Total 15-Minute Volume [veh/h]	99	23	25	12	6	10	5	161	55	47	81	11
Total Analysis Volume [veh/h]	398	93	100	49	26	40	21	643	220	188	324	46
Pedestrian Volume [ped/h]	0			0			0			0		
Bicycle Volume [bicycles/h]	0			0			0			0		

Intersection Settings

Cycle Length [s]	100
Lost time [s]	10.00

Phasing & Timing

Control Type	Permiss	Permiss	Permiss	Permiss	Permiss	Permiss	Protecte	Permiss	Permiss	Protecte	Permiss	Permiss
Signal group	0	2	0	0	6	0	3	8	0	7	4	0
Auxiliary Signal Groups												
Lead / Lag	-	-	-	-	-	-	Lead	-	-	Lead	-	-

Movement, Approach, & Intersection Results

V/C, Movement V/C Ratio	0.25	0.12	0.12	0.03	0.02	0.03	0.01	0.20	0.14	0.06	0.20	0.03
Intersection LOS	B											
Intersection V/C	0.633											

FUTURE BASELNE WITHOUT PROJECT

Vincent Avenue Industrial Building

Vistro File: G:\...\AMC.vistro
Report File: G:\...\FB AM.pdf

Scenario 1 Future Baseline Without Project
5/6/2020

Intersection Analysis Summary

ID	Intersection Name	Control Type	Method	Worst Mvmt	V/C	Delay (s/veh)	LOS
1	I-605 SB On Ramp (NS) at Live Oak Avenue (EW)	Signalized	ICU 1	WB Thru	0.517	-	A
2	I-605 NB Ramps (NS) at Live Oak Avenue (EW)	Two-way stop	HCM 6th Edition	SB Right	0.994	72.6	F
3	Graham Road (NS) at Live Oak Avenue (EW)	Signalized	ICU 1	WB Thru	0.569	-	A
4	Rivergrade Road (NS) at Live Oak Avenue (EW)	Signalized	ICU 1	WB Thru	0.587	-	A
5	Stewart Avenue (NS) at Live Oak Avenue (EW)	Signalized	ICU 1	WB Thru	0.810	-	D
6	Baldwin Park Boulevard (NS) at Live Oak Avenue (EW)	Signalized	ICU 1	WB Thru	0.542	-	A
7	Arrow Highway (NS) at Live Oak Ave/Arrow Hwy (EW)	Signalized	ICU 1	WB Thru	0.628	-	B
8	Maine Avenue (NS) at Arrow Highway (EW)	Signalized	ICU 1	WB Thru	0.794	-	C
9	Santa Fe Dam/Azusa Canyon Road (NS) at Arrow Highway (EW)	Signalized	ICU 1	WB Thru	0.929	-	E
10	4th Street (NS) at Arrow Highway (EW)	Signalized	ICU 1	EB Thru	0.346	-	A
11	Irwindale Avenue (NS) at I-210 WB Ramps (EW)	Signalized	ICU 1	SB Thru	0.463	-	A
12	Irwindale Avenue (NS) at I-210 EB Ramps (EW)	Signalized	ICU 1	NB Thru	0.671	-	B
13	Irwindale Avenue (NS) at Jardin De Roca/Irwindale Rd (EW)	Signalized	ICU 1	SB Thru	0.570	-	A
14	Irwindale Avenue (NS) at 1st Street (EW)	Signalized	ICU 1	NB Thru	0.507	-	A
15	Irwindale Avenue (NS) at Gladstone Street (EW)	Signalized	ICU 1	WB Left	0.649	-	B
16	Irwindale Avenue (NS) at Arrow Highway (EW)	Signalized	ICU 1	WB Thru	0.848	-	D
17	Vincent Avenue (NS) at	Signalized	ICU 1	WB Thru	0.525		A

17	Gladstone Street (EW)	Signalized	ICU 1	WB Thru	0.525	-	A
18	Vincent Avenue (NS) at Arrow Highway (EW)	Signalized	ICU 1	WB Thru	0.682	-	B
21	Vincent Avenue (NS) at Cypress Street (EW)	Signalized	ICU 1	WB Thru	0.647	-	B
22	Vincent Avenue (NS) at San Bernardino Road (EW)	Signalized	ICU 1	WB Thru	0.655	-	B
23	Vincent Avenue (NS) at Badillo Street (EW)	Signalized	ICU 1	WB Thru	0.612	-	B
24	Vincent Avenue (NS) at Puente Avenue (EW)	Signalized	ICU 1	NB Thru	0.581	-	A
25	Vincent Avenue (NS) at Rowland Avenue (EW)	Signalized	ICU 1	SB Thru	0.539	-	A
26	Vincent Avenue (NS) at Workman Avenue (EW)	Signalized	ICU 1	SB Thru	0.614	-	B
27	Vincent Avenue (NS) at I-10 WB Ramps (EW)	Signalized	ICU 1	SB Thru	0.437	-	A
28	Vincent Avenue (NS) at I-10 EB Ramps (EW)	Signalized	ICU 1	NB Thru	0.486	-	A
29	Vernon Ave/Lark Ellen Ave (NS) at Gladstone Street (EW)	Signalized	ICU 1	WB Thru	0.686	-	B
30	Azusa Avenue (NS) at I-210 EB Ramps (EW)	Signalized	ICU 1	NB Thru	0.665	-	B
31	Azusa Avenue (NS) at Paramount Street (EW)	Signalized	ICU 1	NB Thru	0.592	-	A
32	Azusa Avenue (NS) at Gladstone Street (EW)	Signalized	ICU 1	WB Thru	0.732	-	C
33	San Gabriel Ave/Azusa Ave (NS) at 1st St (EW)	Signalized	ICU 1	SB Thru	0.645	-	B
34	Alameda Ave/I-210 WB Ramps NS) at 1st St (EW)	Signalized	ICU 1	WB Left	0.913	-	E

V/C, Delay, LOS: For two-way stop, these values are taken from the movement with the worst (highest) delay value. For all other control types, they are taken for the whole intersection.

Intersection Level Of Service Report
Intersection 1: I-605 SB On Ramp (NS) at Live Oak Avenue (EW)

Control Type:	Signalized	Delay (sec / veh):	-
Analysis Method:	ICU 1	Level Of Service:	A
Analysis Period:	15 minutes	Volume to Capacity (v/c):	0.517

Intersection Setup

Name	I-605 SB On Ramps				Live Oak Avenue	
Approach	Northbound		Eastbound		Westbound	
Lane Configuration						
Turning Movement	Left	Right	Thru	Right	Left	Thru
Lane Width [ft]	12.00	12.00	12.00	12.00	12.00	12.00
No. of Lanes in Pocket	0	0	0	0	1	0
Pocket Length [ft]	100.00	100.00	100.00	100.00	365.00	100.00
Speed [mph]	35.00		35.00		45.00	
Grade [%]	0.00		0.00		0.00	
Crosswalk	Yes		No		No	

Volumes

Name	I-605 SB On Ramps				Live Oak Avenue	
Base Volume Input [veh/h]	0	0	280	347	521	1094
Base Volume Adjustment Factor	1.0000	1.0000	1.0000	0.0000	1.0000	1.0000
Heavy Vehicles Percentage [%]	2.00	2.00	2.00	2.00	2.00	2.00
Growth Rate	1.00	1.00	1.01	1.01	1.01	1.01
In-Process Volume [veh/h]	0	0	0	0	0	0
Site-Generated Trips [veh/h]	0	0	0	0	0	0
Diverted Trips [veh/h]	0	0	0	0	0	0
Pass-by Trips [veh/h]	0	0	0	0	0	0
Existing Site Adjustment Volume [veh/h]	0	0	0	0	0	0
Other Volume [veh/h]	0	0	0	0	0	0
Total Hourly Volume [veh/h]	0	0	283	0	526	1105
Peak Hour Factor	1.0000	1.0000	1.0000	1.0000	1.0000	1.0000
Other Adjustment Factor	1.0000	1.0000	1.0000	0.0000	1.0000	1.0000
Total 15-Minute Volume [veh/h]	0	0	71	0	132	276
Total Analysis Volume [veh/h]	0	0	283	0	526	1105
Pedestrian Volume [ped/h]	0		0		0	
Bicycle Volume [bicycles/h]	0		0		0	

Intersection Settings

Cycle Length [s]	100
Lost time [s]	10.00

Phasing & Timing

Control Type	Permissive	Permissive	Permissive	Permissive	Protected	Permissive
Signal group	0	0	2	0	1	6
Auxiliary Signal Groups						
Lead / Lag	-	-	-	-	Lead	-

Movement, Approach, & Intersection Results

V/C, Movement V/C Ratio	0.00	0.00	0.09	0.00	0.33	0.35
Intersection LOS	A					
Intersection V/C	0.517					

Intersection Level Of Service Report
Intersection 2: I-605 NB Ramps (NS) at Live Oak Avenue (EW)

Control Type:	Two-way stop	Delay (sec / veh):	72.6
Analysis Method:	HCM 6th Edition	Level Of Service:	F
Analysis Period:	15 minutes	Volume to Capacity (v/c):	0.994

Intersection Setup

Name	I-605 NB Ramps			I-605 NB Ramps			Live Oak Avenue			Live Oak Avenue		
Approach	Northbound			Southbound			Eastbound			Westbound		
Lane Configuration												
Turning Movement	Left	Thru	Right	Left	Thru	Right	Left	Thru	Right	Left	Thru	Right
Lane Width [ft]	12.00	12.00	12.00	12.00	12.00	12.00	12.00	12.00	12.00	12.00	12.00	12.00
No. of Lanes in Pocket	0	0	0	0	0	0	0	0	0	0	0	0
Pocket Length [ft]	100.00	100.00	100.00	100.00	100.00	100.00	100.00	100.00	100.00	100.00	100.00	100.00
Speed [mph]	35.00			35.00			45.00			45.00		
Grade [%]	0.00			0.00			0.00			0.00		
Crosswalk	Yes			Yes			No			No		

Volumes

Name	I-605 NB Ramps			I-605 NB Ramps			Live Oak Avenue			Live Oak Avenue		
Base Volume Input [veh/h]	0	0	469	0	0	432	0	262	0	0	1205	0
Base Volume Adjustment Factor	1.0000	1.0000	1.0000	1.0000	1.0000	1.0000	1.0000	1.0000	1.0000	1.0000	1.0000	1.0000
Heavy Vehicles Percentage [%]	2.00	2.00	2.00	2.00	2.00	2.00	2.00	2.00	2.00	2.00	2.00	2.00
Growth Rate	1.00	1.00	1.01	1.00	1.00	1.01	1.00	1.01	1.00	1.00	1.01	1.00
In-Process Volume [veh/h]	0	0	0	0	0	0	0	0	0	0	0	0
Site-Generated Trips [veh/h]	0	0	0	0	0	0	0	0	0	0	0	0
Diverted Trips [veh/h]	0	0	0	0	0	0	0	0	0	0	0	0
Pass-by Trips [veh/h]	0	0	0	0	0	0	0	0	0	0	0	0
Existing Site Adjustment Volume [veh/h]	0	0	0	0	0	0	0	0	0	0	0	0
Other Volume [veh/h]	0	0	0	0	0	0	0	0	0	0	0	0
Total Hourly Volume [veh/h]	0	0	474	0	0	436	0	265	0	0	1217	0
Peak Hour Factor	1.0000	1.0000	1.0000	1.0000	1.0000	1.0000	1.0000	1.0000	1.0000	1.0000	1.0000	1.0000
Other Adjustment Factor	1.0000	1.0000	1.0000	1.0000	1.0000	1.0000	1.0000	1.0000	1.0000	1.0000	1.0000	1.0000
Total 15-Minute Volume [veh/h]	0	0	119	0	0	109	0	66	0	0	304	0
Total Analysis Volume [veh/h]	0	0	474	0	0	436	0	265	0	0	1217	0
Pedestrian Volume [ped/h]	0			0			0			0		

Intersection Settings

Priority Scheme	Stop	Stop	Free	Free
Flared Lane				
Storage Area [veh]	0	0	0	0
Two-Stage Gap Acceptance	No	No		
Number of Storage Spaces in Median	0	0	0	0

Movement, Approach, & Intersection Results

V/C, Movement V/C Ratio	0.00	0.00	0.53	0.00	0.00	0.99	0.00	0.00	0.00	0.00	0.01	0.00
d_M, Delay for Movement [s/veh]	0.00	0.00	13.51	0.00	0.00	72.60	0.00	0.00	0.00	0.00	0.00	0.00
Movement LOS			B			F		A			A	
95th-Percentile Queue Length [veh/ln]	0.00	0.00	3.20	0.00	0.00	12.64	0.00	0.00	0.00	0.00	0.00	0.00
95th-Percentile Queue Length [ft/ln]	0.00	0.00	80.09	0.00	0.00	315.91	0.00	0.00	0.00	0.00	0.00	0.00
d_A, Approach Delay [s/veh]	13.51			72.60			0.00			0.00		
Approach LOS	B			F			A			A		
d_I, Intersection Delay [s/veh]	15.91											
Intersection LOS	F											

Intersection Level Of Service Report
Intersection 3: Graham Road (NS) at Live Oak Avenue (EW)

Control Type:	Signalized	Delay (sec / veh):	-
Analysis Method:	ICU 1	Level Of Service:	A
Analysis Period:	15 minutes	Volume to Capacity (v/c):	0.569

Intersection Setup

Name	Graham Road		Live Oak Avenue		Live Oak Avenue	
Approach	Northbound		Eastbound		Westbound	
Lane Configuration						
Turning Movement	Left	Right	Thru	Right	Left	Thru
Lane Width [ft]	12.00	12.00	12.00	12.00	12.00	12.00
No. of Lanes in Pocket	0	0	0	0	1	0
Pocket Length [ft]	100.00	100.00	100.00	100.00	205.00	100.00
Speed [mph]	35.00		45.00		45.00	
Grade [%]	0.00		0.00		0.00	
Crosswalk	Yes		No		Yes	

Volumes

Name	Graham Road		Live Oak Avenue		Live Oak Avenue	
Base Volume Input [veh/h]	38	39	578	28	14	1334
Base Volume Adjustment Factor	1.0000	1.0000	1.0000	1.0000	1.0000	1.0000
Heavy Vehicles Percentage [%]	2.00	2.00	2.00	2.00	2.00	2.00
Growth Rate	1.01	1.01	1.01	1.01	1.01	1.01
In-Process Volume [veh/h]	0	0	0	0	0	0
Site-Generated Trips [veh/h]	0	0	0	0	0	0
Diverted Trips [veh/h]	0	0	0	0	0	0
Pass-by Trips [veh/h]	0	0	0	0	0	0
Existing Site Adjustment Volume [veh/h]	0	0	0	0	0	0
Other Volume [veh/h]	0	0	0	0	0	0
Total Hourly Volume [veh/h]	38	39	584	28	14	1347
Peak Hour Factor	1.0000	1.0000	1.0000	1.0000	1.0000	1.0000
Other Adjustment Factor	1.0000	1.0000	1.0000	1.0000	1.0000	1.0000
Total 15-Minute Volume [veh/h]	10	10	146	7	4	337
Total Analysis Volume [veh/h]	38	39	584	28	14	1347
Pedestrian Volume [ped/h]	0		0		0	
Bicycle Volume [bicycles/h]	0		0		0	

Intersection Settings

Cycle Length [s]	100
Lost time [s]	10.00

Phasing & Timing

Control Type	Permissive	Permissive	Permissive	Permissive	Protected	Permissive
Signal group	5	0	8	0	7	4
Auxiliary Signal Groups						
Lead / Lag	Lead	-	-	-	Lead	-

Movement, Approach, & Intersection Results

V/C, Movement V/C Ratio	0.02	0.05	0.18	0.02	0.01	0.42
Intersection LOS	A					
Intersection V/C	0.569					

Intersection Level Of Service Report
Intersection 4: Rivergrade Road (NS) at Live Oak Avenue (EW)

Control Type:	Signalized	Delay (sec / veh):	-
Analysis Method:	ICU 1	Level Of Service:	A
Analysis Period:	15 minutes	Volume to Capacity (v/c):	0.587

Intersection Setup

Name	Rivergrade Raod			Rivergrade Road			Live Oak Avenue			Live Oak Avenue		
Approach	Northbound			Southbound			Eastbound			Westbound		
Lane Configuration												
Turning Movement	Left	Thru	Right	Left	Thru	Right	Left	Thru	Right	Left	Thru	Right
Lane Width [ft]	12.00	12.00	12.00	12.00	12.00	12.00	12.00	12.00	12.00	12.00	12.00	12.00
No. of Lanes in Pocket	1	0	0	1	0	1	1	0	0	1	0	1
Pocket Length [ft]	315.00	100.00	100.00	160.00	100.00	145.00	205.00	100.00	100.00	155.00	100.00	120.00
Speed [mph]	50.00			40.00			45.00			45.00		
Grade [%]	0.00			0.00			0.00			0.00		
Crosswalk	Yes			Yes			Yes			Yes		

Volumes

Name	Rivergrade Raod			Rivergrade Road			Live Oak Avenue			Live Oak Avenue		
Base Volume Input [veh/h]	52	67	138	24	311	58	71	587	77	268	983	22
Base Volume Adjustment Factor	1.0000	1.0000	1.0000	1.0000	1.0000	1.0000	1.0000	1.0000	1.0000	1.0000	1.0000	1.0000
Heavy Vehicles Percentage [%]	2.00	2.00	2.00	2.00	2.00	2.00	2.00	2.00	2.00	2.00	2.00	2.00
Growth Rate	1.01	1.01	1.01	1.01	1.01	1.01	1.01	1.01	1.01	1.01	1.01	1.01
In-Process Volume [veh/h]	0	0	0	0	0	0	0	0	0	0	0	0
Site-Generated Trips [veh/h]	0	0	0	0	0	0	0	0	0	0	0	0
Diverted Trips [veh/h]	0	0	0	0	0	0	0	0	0	0	0	0
Pass-by Trips [veh/h]	0	0	0	0	0	0	0	0	0	0	0	0
Existing Site Adjustment Volume [veh/h]	0	0	0	0	0	0	0	0	0	0	0	0
Other Volume [veh/h]	0	0	0	0	0	0	0	0	0	0	0	0
Total Hourly Volume [veh/h]	53	68	139	24	314	59	72	593	78	271	993	22
Peak Hour Factor	1.0000	1.0000	1.0000	1.0000	1.0000	1.0000	1.0000	1.0000	1.0000	1.0000	1.0000	1.0000
Other Adjustment Factor	1.0000	1.0000	1.0000	1.0000	1.0000	1.0000	1.0000	1.0000	1.0000	1.0000	1.0000	1.0000
Total 15-Minute Volume [veh/h]	13	17	35	6	79	15	18	148	20	68	248	6
Total Analysis Volume [veh/h]	53	68	139	24	314	59	72	593	78	271	993	22
Pedestrian Volume [ped/h]	0			0			0			0		
Bicycle Volume [bicycles/h]	0			0			0			0		

Intersection Settings

Cycle Length [s]	100
Lost time [s]	10.00

Phasing & Timing

Control Type	Protecte	Permiss	Overlap	Protecte	Permiss	Permiss	Protecte	Permiss	Permiss	Protecte	Permiss	Permiss
Signal group	5	2	2	1	6	0	3	8	0	7	4	0
Auxiliary Signal Groups			2,7									
Lead / Lag	Lead	-	-	Lead	-	-	Lead	-	-	Lead	-	-

Movement, Approach, & Intersection Results

V/C, Movement V/C Ratio	0.03	0.04	0.00	0.02	0.10	0.04	0.05	0.19	0.05	0.17	0.31	0.01
Intersection LOS	A											
Intersection V/C	0.587											

Intersection Level Of Service Report
Intersection 5: Stewart Avenue (NS) at Live Oak Avenue (EW)

Control Type:	Signalized	Delay (sec / veh):	-
Analysis Method:	ICU 1	Level Of Service:	D
Analysis Period:	15 minutes	Volume to Capacity (v/c):	0.810

Intersection Setup

Name	Stewart Avenue			Stewart Avenue			Live Oak Avenue			Live Oak Avenue		
Approach	Northbound			Southbound			Eastbound			Westbound		
Lane Configuration												
Turning Movement	Left	Thru	Right	Left	Thru	Right	Left	Thru	Right	Left	Thru	Right
Lane Width [ft]	12.00	12.00	12.00	12.00	12.00	12.00	12.00	12.00	12.00	12.00	12.00	12.00
No. of Lanes in Pocket	0	0	0	1	0	0	1	0	0	1	0	0
Pocket Length [ft]	100.00	100.00	100.00	100.00	100.00	100.00	165.00	100.00	100.00	100.00	100.00	100.00
Speed [mph]	30.00			30.00			45.00			45.00		
Grade [%]	0.00			0.00			0.00			0.00		
Crosswalk	Yes			Yes			No			Yes		

Volumes

Name	Stewart Avenue			Stewart Avenue			Live Oak Avenue			Live Oak Avenue		
Base Volume Input [veh/h]	239	112	28	10	35	49	12	609	25	23	1450	26
Base Volume Adjustment Factor	1.0000	1.0000	1.0000	1.0000	1.0000	1.0000	1.0000	1.0000	1.0000	1.0000	1.0000	1.0000
Heavy Vehicles Percentage [%]	2.00	2.00	2.00	2.00	2.00	2.00	2.00	2.00	2.00	2.00	2.00	2.00
Growth Rate	1.01	1.01	1.01	1.01	1.01	1.01	1.01	1.01	1.01	1.01	1.01	1.01
In-Process Volume [veh/h]	0	0	0	0	0	0	0	0	0	0	0	0
Site-Generated Trips [veh/h]	0	0	0	0	0	0	0	0	0	0	0	0
Diverted Trips [veh/h]	0	0	0	0	0	0	0	0	0	0	0	0
Pass-by Trips [veh/h]	0	0	0	0	0	0	0	0	0	0	0	0
Existing Site Adjustment Volume [veh/h]	0	0	0	0	0	0	0	0	0	0	0	0
Other Volume [veh/h]	0	0	0	0	0	0	0	0	0	0	0	0
Total Hourly Volume [veh/h]	241	113	28	10	35	49	12	615	25	23	1465	26
Peak Hour Factor	1.0000	1.0000	1.0000	1.0000	1.0000	1.0000	1.0000	1.0000	1.0000	1.0000	1.0000	1.0000
Other Adjustment Factor	1.0000	1.0000	1.0000	1.0000	1.0000	1.0000	1.0000	1.0000	1.0000	1.0000	1.0000	1.0000
Total 15-Minute Volume [veh/h]	60	28	7	3	9	12	3	154	6	6	366	7
Total Analysis Volume [veh/h]	241	113	28	10	35	49	12	615	25	23	1465	26
Pedestrian Volume [ped/h]	0			0			0			0		
Bicycle Volume [bicycles/h]	0			0			0			0		

Intersection Settings

Cycle Length [s]	100
Lost time [s]	10.00

Phasing & Timing

Control Type	Permiss	Permiss	Permiss	Permiss	Permiss	Permiss	Permiss	Permiss	Permiss	Permiss	Permiss	Permiss
Signal group	0	2	0	0	6	0	0	8	0	0	4	0
Auxiliary Signal Groups												
Lead / Lag	-	-	-	-	-	-	-	-	-	-	-	-

Movement, Approach, & Intersection Results

V/C, Movement V/C Ratio	0.15	0.24	0.24	0.01	0.02	0.03	0.01	0.19	0.02	0.01	0.46	0.02
Intersection LOS	D											
Intersection V/C	0.810											

Intersection Level Of Service Report
Intersection 6: Baldwin Park Boulevard (NS) at Live Oak Avenue (EW)

Control Type:	Signalized	Delay (sec / veh):	-
Analysis Method:	ICU 1	Level Of Service:	A
Analysis Period:	15 minutes	Volume to Capacity (v/c):	0.542

Intersection Setup

Name	Baldwin Park Boulevard						Live Oak Avenue			Live Oak Avenue		
Approach	Northbound			Southbound			Eastbound			Westbound		
Lane Configuration												
Turning Movement	Left	Thru	Right	Left	Thru	Right	Left	Thru	Right	Left	Thru	Right
Lane Width [ft]	12.00	12.00	12.00	12.00	12.00	12.00	12.00	12.00	12.00	12.00	12.00	12.00
No. of Lanes in Pocket	1	0	0	0	0	0	0	0	0	1	0	0
Pocket Length [ft]	100.00	100.00	100.00	100.00	100.00	100.00	100.00	100.00	100.00	200.00	100.00	100.00
Speed [mph]	40.00			35.00			45.00			45.00		
Grade [%]	0.00			0.00			0.00			0.00		
Crosswalk	Yes			Yes			No			No		

Volumes

Name	Baldwin Park Boulevard						Live Oak Avenue			Live Oak Avenue		
Base Volume Input [veh/h]	311	0	237	0	0	0	0	581	89	143	1056	0
Base Volume Adjustment Factor	1.0000	1.0000	1.0000	1.0000	1.0000	1.0000	1.0000	1.0000	1.0000	1.0000	1.0000	1.0000
Heavy Vehicles Percentage [%]	2.00	2.00	2.00	2.00	2.00	2.00	2.00	2.00	2.00	2.00	2.00	2.00
Growth Rate	1.01	1.01	1.01	1.01	1.01	1.01	1.01	1.01	1.01	1.01	1.01	1.01
In-Process Volume [veh/h]	0	0	0	0	0	0	0	0	0	0	0	0
Site-Generated Trips [veh/h]	0	0	0	0	0	0	0	0	0	0	0	0
Diverted Trips [veh/h]	0	0	0	0	0	0	0	0	0	0	0	0
Pass-by Trips [veh/h]	0	0	0	0	0	0	0	0	0	0	0	0
Existing Site Adjustment Volume [veh/h]	0	0	0	0	0	0	0	0	0	0	0	0
Other Volume [veh/h]	0	0	0	0	0	0	0	0	0	0	0	0
Total Hourly Volume [veh/h]	314	0	239	0	0	0	0	587	90	144	1067	0
Peak Hour Factor	1.0000	1.0000	1.0000	1.0000	1.0000	1.0000	1.0000	1.0000	1.0000	1.0000	1.0000	1.0000
Other Adjustment Factor	1.0000	1.0000	1.0000	1.0000	1.0000	1.0000	1.0000	1.0000	1.0000	1.0000	1.0000	1.0000
Total 15-Minute Volume [veh/h]	79	0	60	0	0	0	0	147	23	36	267	0
Total Analysis Volume [veh/h]	314	0	239	0	0	0	0	587	90	144	1067	0
Pedestrian Volume [ped/h]	0			0			0			0		
Bicycle Volume [bicycles/h]	0			0			0			0		

Intersection Settings

Cycle Length [s]	100
Lost time [s]	10.00

Phasing & Timing

Control Type	Permiss	Permiss	Permiss	Permiss	Permiss	Permiss	Permiss	Permiss	Permiss	Protecte	Permiss	Permiss
Signal group	5	0	0	0	0	0	0	8	0	7	4	0
Auxiliary Signal Groups												
Lead / Lag	Lead	-	-	-	-	-	-	-	-	Lead	-	-

Movement, Approach, & Intersection Results

V/C, Movement V/C Ratio	0.10	0.00	0.00	0.00	0.00	0.00	0.00	0.18	0.06	0.09	0.33	0.00
Intersection LOS	A											
Intersection V/C	0.542											

Intersection Level Of Service Report
Intersection 7: Arrow Highway (NS) at Live Oak Ave/Arrow Hwy (EW)

Control Type:	Signalized	Delay (sec / veh):	-
Analysis Method:	ICU 1	Level Of Service:	B
Analysis Period:	15 minutes	Volume to Capacity (v/c):	0.628

Intersection Setup

Name			Live Oak Avenue		Arrow Highway	
Approach	Southbound		Eastbound		Westbound	
Lane Configuration						
Turning Movement	Left	Right	Left	Thru	Thru	Right
Lane Width [ft]	12.00	12.00	12.00	12.00	12.00	12.00
No. of Lanes in Pocket	0	0	1	0	0	0
Pocket Length [ft]	100.00	100.00	160.00	100.00	100.00	100.00
Speed [mph]	35.00		45.00		45.00	
Grade [%]	0.00		0.00		0.00	
Crosswalk	No		Yes		No	

Volumes

Name			Live Oak Avenue		Arrow Highway	
Base Volume Input [veh/h]	296	59	113	634	1117	1772
Base Volume Adjustment Factor	1.0000	1.0000	1.0000	1.0000	1.0000	1.0000
Heavy Vehicles Percentage [%]	2.00	2.00	2.00	2.00	2.00	2.00
Growth Rate	1.01	1.01	1.01	1.01	1.01	1.00
In-Process Volume [veh/h]	0	0	0	0	0	0
Site-Generated Trips [veh/h]	0	0	0	0	0	0
Diverted Trips [veh/h]	0	0	0	0	0	0
Pass-by Trips [veh/h]	0	0	0	0	0	0
Existing Site Adjustment Volume [veh/h]	0	0	0	0	0	0
Other Volume [veh/h]	0	0	0	0	0	0
Total Hourly Volume [veh/h]	299	60	114	640	1128	1772
Peak Hour Factor	1.0000	1.0000	1.0000	1.0000	1.0000	1.0000
Other Adjustment Factor	1.0000	1.0000	1.0000	1.0000	1.0000	1.0000
Total 15-Minute Volume [veh/h]	75	15	29	160	282	443
Total Analysis Volume [veh/h]	299	60	114	640	1128	1772
Pedestrian Volume [ped/h]	0		0		0	
Bicycle Volume [bicycles/h]	0		0		0	

Intersection Settings

Cycle Length [s]	100
Lost time [s]	10.00

Phasing & Timing

Control Type	Permissive	Permissive	Permissive	Permissive	Permissive	Unsignalized
Signal group	1	0	0	8	4	0
Auxiliary Signal Groups						
Lead / Lag	Lead	-	-	-	-	-

Movement, Approach, & Intersection Results

V/C, Movement V/C Ratio	0.09	0.04	0.07	0.20	0.35	0.00
Intersection LOS	B					
Intersection V/C	0.628					

Intersection Level Of Service Report
Intersection 8: Maine Avenue (NS) at Arrow Highway (EW)

Control Type:	Signalized	Delay (sec / veh):	-
Analysis Method:	ICU 1	Level Of Service:	C
Analysis Period:	15 minutes	Volume to Capacity (v/c):	0.794

Intersection Setup

Name	Maine Avenue		Arrow Highway		Arrow Highway	
Approach	Northbound		Eastbound		Westbound	
Lane Configuration						
Turning Movement	Left	Right	Thru	Right	Left	Thru
Lane Width [ft]	12.00	12.00	12.00	12.00	12.00	12.00
No. of Lanes in Pocket	0	1	0	0	1	0
Pocket Length [ft]	100.00	50.00	100.00	100.00	80.00	100.00
Speed [mph]	35.00		45.00		45.00	
Grade [%]	0.00		0.00		0.00	
Crosswalk	Yes		No		Yes	

Volumes

Name	Maine Avenue		Arrow Highway		Arrow Highway	
Base Volume Input [veh/h]	606	96	869	172	61	2288
Base Volume Adjustment Factor	1.0000	1.0000	1.0000	1.0000	1.0000	1.0000
Heavy Vehicles Percentage [%]	2.00	2.00	2.00	2.00	2.00	2.00
Growth Rate	1.01	1.01	1.01	1.01	1.01	1.01
In-Process Volume [veh/h]	0	0	0	0	0	0
Site-Generated Trips [veh/h]	0	0	0	0	0	0
Diverted Trips [veh/h]	0	0	0	0	0	0
Pass-by Trips [veh/h]	0	0	0	0	0	0
Existing Site Adjustment Volume [veh/h]	0	0	0	0	0	0
Other Volume [veh/h]	0	0	0	0	0	0
Total Hourly Volume [veh/h]	612	97	878	174	62	2311
Peak Hour Factor	1.0000	1.0000	1.0000	1.0000	1.0000	1.0000
Other Adjustment Factor	1.0000	1.0000	1.0000	1.0000	1.0000	1.0000
Total 15-Minute Volume [veh/h]	153	24	220	44	16	578
Total Analysis Volume [veh/h]	612	97	878	174	62	2311
Pedestrian Volume [ped/h]	0		0		0	
Bicycle Volume [bicycles/h]	0		0		0	

Intersection Settings

Cycle Length [s]	100
Lost time [s]	10.00

Phasing & Timing

Control Type	Split	Split	Permissive	Permissive	Permissive	Permissive
Signal group	5	0	8	0	0	4
Auxiliary Signal Groups						
Lead / Lag	Lead	-	-	-	-	-

Movement, Approach, & Intersection Results

V/C, Movement V/C Ratio	0.19	0.06	0.27	0.11	0.04	0.48
Intersection LOS	C					
Intersection V/C	0.794					

Intersection Level Of Service Report

Intersection 9: Santa Fe Dam/Azusa Canyon Road (NS) at Arrow Highway (EW)

Control Type:	Signalized	Delay (sec / veh):	-
Analysis Method:	ICU 1	Level Of Service:	E
Analysis Period:	15 minutes	Volume to Capacity (v/c):	0.929

Intersection Setup

Name	Azusa Canyon Road						Arrow Highway			Arrow Highway		
Approach	Northbound			Southbound			Eastbound			Westbound		
Lane Configuration												
Turning Movement	Left	Thru	Right	Left	Thru	Right	Left	Thru	Right	Left	Thru	Right
Lane Width [ft]	12.00	12.00	12.00	12.00	12.00	12.00	12.00	12.00	12.00	12.00	12.00	12.00
No. of Lanes in Pocket	1	0	0	0	0	0	1	0	0	1	0	0
Pocket Length [ft]	200.00	100.00	100.00	100.00	100.00	100.00	185.00	100.00	100.00	180.00	100.00	100.00
Speed [mph]	35.00			35.00			45.00			45.00		
Grade [%]	0.00			0.00			0.00			0.00		
Crosswalk	Yes			Yes			No			Yes		

Volumes

Name	Azusa Canyon Road						Arrow Highway			Arrow Highway		
Base Volume Input [veh/h]	837	14	145	11	3	12	19	624	122	67	1708	23
Base Volume Adjustment Factor	1.0000	1.0000	1.0000	1.0000	1.0000	1.0000	1.0000	1.0000	1.0000	1.0000	1.0000	1.0000
Heavy Vehicles Percentage [%]	2.00	2.00	2.00	2.00	2.00	2.00	2.00	2.00	2.00	2.00	2.00	2.00
Growth Rate	1.01	1.00	1.01	1.00	1.00	1.00	1.00	1.01	1.01	1.01	1.01	1.00
In-Process Volume [veh/h]	0	0	0	0	0	0	0	0	0	0	0	0
Site-Generated Trips [veh/h]	0	0	0	0	0	0	0	0	0	0	0	0
Diverted Trips [veh/h]	0	0	0	0	0	0	0	0	0	0	0	0
Pass-by Trips [veh/h]	0	0	0	0	0	0	0	0	0	0	0	0
Existing Site Adjustment Volume [veh/h]	0	0	0	0	0	0	0	0	0	0	0	0
Other Volume [veh/h]	0	0	0	0	0	0	0	0	0	0	0	0
Total Hourly Volume [veh/h]	845	14	146	11	3	12	19	630	123	68	1725	23
Peak Hour Factor	1.0000	1.0000	1.0000	1.0000	1.0000	1.0000	1.0000	1.0000	1.0000	1.0000	1.0000	1.0000
Other Adjustment Factor	1.0000	1.0000	1.0000	1.0000	1.0000	1.0000	1.0000	1.0000	1.0000	1.0000	1.0000	1.0000
Total 15-Minute Volume [veh/h]	211	4	37	3	1	3	5	158	31	17	431	6
Total Analysis Volume [veh/h]	845	14	146	11	3	12	19	630	123	68	1725	23
Pedestrian Volume [ped/h]	0			0			0			0		
Bicycle Volume [bicycles/h]	0			0			0			0		

Intersection Settings

Cycle Length [s]	100
Lost time [s]	10.00

Phasing & Timing

Control Type	Split	Split	Split	Split	Split	Split	Protecte	Permiss	Permiss	Protecte	Permiss	Permiss
Signal group	0	2	0	0	6	0	3	8	0	7	4	0
Auxiliary Signal Groups												
Lead / Lag	-	-	-	-	-	-	Lead	-	-	Lead	-	-

Movement, Approach, & Intersection Results

V/C, Movement V/C Ratio	0.26	0.27	0.09	0.01	0.01	0.01	0.01	0.20	0.08	0.04	0.54	0.01
Intersection LOS	E											
Intersection V/C	0.929											

Intersection Level Of Service Report
Intersection 10: 4th Street (NS) at Arrow Highway (EW)

Control Type:	Signalized	Delay (sec / veh):	-
Analysis Method:	ICU 1	Level Of Service:	A
Analysis Period:	15 minutes	Volume to Capacity (v/c):	0.346

Intersection Setup

Name	4th Street			4th Street			Arrow Highway			Arrow Highway		
Approach	Northbound			Southbound			Eastbound			Westbound		
Lane Configuration												
Turning Movement	Left	Thru	Right	Left	Thru	Right	Left	Thru	Right	Left	Thru	Right
Lane Width [ft]	12.00	12.00	12.00	12.00	12.00	12.00	12.00	12.00	12.00	12.00	12.00	12.00
No. of Lanes in Pocket	1	0	0	0	0	0	1	0	1	1	0	0
Pocket Length [ft]	55.00	100.00	100.00	100.00	100.00	100.00	145.00	100.00	150.00	195.00	100.00	100.00
Speed [mph]	35.00			25.00			45.00			45.00		
Grade [%]	0.00			0.00			0.00			0.00		
Crosswalk	Yes			Yes			Yes			Yes		

Volumes

Name	4th Street			4th Street			Arrow Highway			Arrow Highway		
Base Volume Input [veh/h]	76	1	22	3	2	12	20	769	126	77	0	0
Base Volume Adjustment Factor	1.0000	1.0000	1.0000	1.0000	1.0000	1.0000	1.0000	1.0000	1.0000	1.0000	1.0000	1.0000
Heavy Vehicles Percentage [%]	2.00	2.00	2.00	2.00	2.00	2.00	2.00	2.00	2.00	2.00	2.00	2.00
Growth Rate	1.01	1.01	1.01	1.01	1.01	1.01	1.01	1.01	1.01	1.01	1.01	1.01
In-Process Volume [veh/h]	0	0	0	0	0	0	0	0	0	0	0	0
Site-Generated Trips [veh/h]	0	0	0	0	0	0	0	0	0	0	0	0
Diverted Trips [veh/h]	0	0	0	0	0	0	0	0	0	0	0	0
Pass-by Trips [veh/h]	0	0	0	0	0	0	0	0	0	0	0	0
Existing Site Adjustment Volume [veh/h]	0	0	0	0	0	0	0	0	0	0	0	0
Other Volume [veh/h]	0	0	0	0	0	0	0	0	0	0	0	0
Total Hourly Volume [veh/h]	77	1	22	3	2	12	20	777	127	78	0	0
Peak Hour Factor	1.0000	1.0000	1.0000	1.0000	1.0000	1.0000	1.0000	1.0000	1.0000	1.0000	1.0000	1.0000
Other Adjustment Factor	1.0000	1.0000	1.0000	1.0000	1.0000	1.0000	1.0000	1.0000	1.0000	1.0000	1.0000	1.0000
Total 15-Minute Volume [veh/h]	19	0	6	1	1	3	5	194	32	20	0	0
Total Analysis Volume [veh/h]	77	1	22	3	2	12	20	777	127	78	0	0
Pedestrian Volume [ped/h]	0			0			0			0		
Bicycle Volume [bicycles/h]	0			0			0			0		

Intersection Settings

Cycle Length [s]	100
Lost time [s]	10.00

Phasing & Timing

Control Type	Split	Split	Split	Split	Split	Split	Protecte	Permiss	Permiss	Protecte	Permiss	Permiss
Signal group	0	2	0	0	6	0	3	8	0	7	4	0
Auxiliary Signal Groups												
Lead / Lag	-	-	-	-	-	-	Lead	-	-	Lead	-	-

Movement, Approach, & Intersection Results

V/C, Movement V/C Ratio	0.02	0.02	0.01	0.00	0.01	0.01	0.01	0.16	0.08	0.05	0.00	0.00
Intersection LOS	A											
Intersection V/C	0.346											

Intersection Level Of Service Report
Intersection 11: Irwindale Avenue (NS) at I-210 WB Ramps (EW)

Control Type:	Signalized	Delay (sec / veh):	-
Analysis Method:	ICU 1	Level Of Service:	A
Analysis Period:	15 minutes	Volume to Capacity (v/c):	0.463

Intersection Setup

Name	Irwindale Avenue				I-210 WB Ramps	
Approach	Northbound		Southbound		Westbound	
Lane Configuration						
Turning Movement	Thru	Right	Left	Thru	Left	Right
Lane Width [ft]	12.00	12.00	12.00	12.00	12.00	12.00
No. of Lanes in Pocket	0	0	0	0	0	0
Pocket Length [ft]	100.00	100.00	100.00	100.00	100.00	100.00
Speed [mph]	35.00		35.00		35.00	
Grade [%]	0.00		0.00		0.00	
Crosswalk	No		No		Yes	

Volumes

Name	Irwindale Avenue				I-210 WB Ramps	
Base Volume Input [veh/h]	826	0	0	1049	281	169
Base Volume Adjustment Factor	1.0000	1.0000	1.0000	1.0000	1.0000	1.0000
Heavy Vehicles Percentage [%]	2.00	2.00	2.00	2.00	2.00	2.00
Growth Rate	1.01	1.00	1.00	1.01	1.01	1.01
In-Process Volume [veh/h]	0	0	0	0	0	0
Site-Generated Trips [veh/h]	0	0	0	0	0	0
Diverted Trips [veh/h]	0	0	0	0	0	0
Pass-by Trips [veh/h]	0	0	0	0	0	0
Existing Site Adjustment Volume [veh/h]	0	0	0	0	0	0
Other Volume [veh/h]	0	0	0	0	0	0
Total Hourly Volume [veh/h]	834	0	0	1059	284	171
Peak Hour Factor	1.0000	1.0000	1.0000	1.0000	1.0000	1.0000
Other Adjustment Factor	1.0000	1.0000	1.0000	1.0000	1.0000	1.0000
Total 15-Minute Volume [veh/h]	209	0	0	265	71	43
Total Analysis Volume [veh/h]	834	0	0	1059	284	171
Pedestrian Volume [ped/h]	0		0		0	
Bicycle Volume [bicycles/h]	0		0		0	

Intersection Settings

Cycle Length [s]	100
Lost time [s]	10.00

Phasing & Timing

Control Type	Permissive	Permissive	Permissive	Permissive	Split	Split
Signal group	2	0	0	6	7	0
Auxiliary Signal Groups						
Lead / Lag	-	-	-	-	Lead	-

Movement, Approach, & Intersection Results

V/C, Movement V/C Ratio	0.17	0.00	0.00	0.22	0.09	0.14
Intersection LOS	A					
Intersection V/C	0.463					

Intersection Level Of Service Report
Intersection 12: Irwindale Avenue (NS) at I-210 EB Ramps (EW)

Control Type:	Signalized	Delay (sec / veh):	-
Analysis Method:	ICU 1	Level Of Service:	B
Analysis Period:	15 minutes	Volume to Capacity (v/c):	0.671

Intersection Setup

Name	Irwindale Avenue			Irwindale Avenue			I-210 EB Ramps			I-210 EB Ramps		
Approach	Northbound			Southbound			Eastbound			Westbound		
Lane Configuration												
Turning Movement	Left	Thru	Right	Left	Thru	Right	Left	Thru	Right	Left	Thru	Right
Lane Width [ft]	12.00	12.00	12.00	12.00	12.00	12.00	12.00	12.00	12.00	12.00	12.00	12.00
No. of Lanes in Pocket	0	0	1	1	0	0	0	0	0	0	0	0
Pocket Length [ft]	100.00	100.00	505.00	330.00	100.00	100.00	100.00	100.00	100.00	100.00	100.00	100.00
Speed [mph]	35.00			35.00			35.00			35.00		
Grade [%]	0.00			0.00			0.00			0.00		
Crosswalk	No			No			No			Yes		

Volumes

Name	Irwindale Avenue			Irwindale Avenue			I-210 EB Ramps			I-210 EB Ramps		
Base Volume Input [veh/h]	0	829	235	167	595	0	444	0	748	0	0	0
Base Volume Adjustment Factor	1.0000	1.0000	1.0000	1.0000	1.0000	1.0000	1.0000	1.0000	1.0000	1.0000	1.0000	1.0000
Heavy Vehicles Percentage [%]	2.00	2.00	2.00	2.00	2.00	2.00	2.00	2.00	2.00	2.00	2.00	2.00
Growth Rate	1.00	1.01	1.01	1.01	1.01	1.00	1.01	1.00	1.01	1.00	1.00	1.00
In-Process Volume [veh/h]	0	0	0	0	0	0	0	0	0	0	0	0
Site-Generated Trips [veh/h]	0	0	0	0	0	0	0	0	0	0	0	0
Diverted Trips [veh/h]	0	0	0	0	0	0	0	0	0	0	0	0
Pass-by Trips [veh/h]	0	0	0	0	0	0	0	0	0	0	0	0
Existing Site Adjustment Volume [veh/h]	0	0	0	0	0	0	0	0	0	0	0	0
Other Volume [veh/h]	0	0	0	0	0	0	0	0	0	0	0	0
Total Hourly Volume [veh/h]	0	837	237	169	601	0	448	0	755	0	0	0
Peak Hour Factor	1.0000	1.0000	1.0000	1.0000	1.0000	1.0000	1.0000	1.0000	1.0000	1.0000	1.0000	1.0000
Other Adjustment Factor	1.0000	1.0000	1.0000	1.0000	1.0000	1.0000	1.0000	1.0000	1.0000	1.0000	1.0000	1.0000
Total 15-Minute Volume [veh/h]	0	209	59	42	150	0	112	0	189	0	0	0
Total Analysis Volume [veh/h]	0	837	237	169	601	0	448	0	755	0	0	0
Pedestrian Volume [ped/h]	0			0			0			0		
Bicycle Volume [bicycles/h]	0			0			0			0		

Intersection Settings

Cycle Length [s]	100
Lost time [s]	10.00

Phasing & Timing

Control Type	Permiss	Permiss	Permiss	Protecte	Permiss	Permiss	Split	Permiss	Split	Permiss	Permiss	Permiss
Signal group	0	2	0	1	6	0	3	0	0	0	0	0
Auxiliary Signal Groups												
Lead / Lag	-	-	-	Lead	-	-	Lead	-	-	-	-	-

Movement, Approach, & Intersection Results

V/C, Movement V/C Ratio	0.00	0.26	0.15	0.05	0.19	0.00	0.14	0.00	0.25	0.00	0.00	0.00
Intersection LOS	B											
Intersection V/C	0.671											

Intersection Level Of Service Report

Intersection 13: Irwindale Avenue (NS) at Jardin De Roca/Irwindale Rd (EW)

Control Type:	Signalized	Delay (sec / veh):	-
Analysis Method:	ICU 1	Level Of Service:	A
Analysis Period:	15 minutes	Volume to Capacity (v/c):	0.570

Intersection Setup

Name	Irwindale Avenue			Irwindale Avenue			Jardin De Roca			Irwindale Road		
Approach	Northbound			Southbound			Eastbound			Westbound		
Lane Configuration												
Turning Movement	Left	Thru	Right	Left	Thru	Right	Left	Thru	Right	Left	Thru	Right
Lane Width [ft]	12.00	12.00	12.00	12.00	12.00	12.00	12.00	12.00	12.00	12.00	12.00	12.00
No. of Lanes in Pocket	1	0	1	1	0	0	0	0	0	0	0	0
Pocket Length [ft]	130.00	100.00	180.00	245.00	100.00	100.00	100.00	100.00	100.00	100.00	100.00	100.00
Speed [mph]	35.00			35.00			25.00			25.00		
Grade [%]	0.00			0.00			0.00			0.00		
Crosswalk	No			No			No			Yes		

Volumes

Name	Irwindale Avenue			Irwindale Avenue			Jardin De Roca			Irwindale Road		
Base Volume Input [veh/h]	53	1015	115	168	1133	41	10	0	13	24	0	35
Base Volume Adjustment Factor	1.0000	1.0000	1.0000	1.0000	1.0000	1.0000	1.0000	1.0000	1.0000	1.0000	1.0000	1.0000
Heavy Vehicles Percentage [%]	2.00	2.00	2.00	2.00	2.00	2.00	2.00	2.00	2.00	2.00	2.00	2.00
Growth Rate	1.01	1.01	1.01	1.01	1.01	1.01	1.01	1.00	1.01	1.01	1.00	1.01
In-Process Volume [veh/h]	0	0	0	0	0	0	0	0	0	0	0	0
Site-Generated Trips [veh/h]	0	0	0	0	0	0	0	0	0	0	0	0
Diverted Trips [veh/h]	0	0	0	0	0	0	0	0	0	0	0	0
Pass-by Trips [veh/h]	0	0	0	0	0	0	0	0	0	0	0	0
Existing Site Adjustment Volume [veh/h]	0	0	0	0	0	0	0	0	0	0	0	0
Other Volume [veh/h]	0	0	0	0	0	0	0	0	0	0	0	0
Total Hourly Volume [veh/h]	54	1025	116	170	1144	41	10	0	13	24	0	35
Peak Hour Factor	1.0000	1.0000	1.0000	1.0000	1.0000	1.0000	1.0000	1.0000	1.0000	1.0000	1.0000	1.0000
Other Adjustment Factor	1.0000	1.0000	1.0000	1.0000	1.0000	1.0000	1.0000	1.0000	1.0000	1.0000	1.0000	1.0000
Total 15-Minute Volume [veh/h]	14	256	29	43	286	10	3	0	3	6	0	9
Total Analysis Volume [veh/h]	54	1025	116	170	1144	41	10	0	13	24	0	35
Pedestrian Volume [ped/h]	0			0			0			0		
Bicycle Volume [bicycles/h]	0			0			0			0		

Intersection Settings

Cycle Length [s]	100
Lost time [s]	10.00

Phasing & Timing

Control Type	Protecte	Permiss	Permiss	Protecte	Permiss	Permiss	Permiss	Permiss	Permiss	Permiss	Permiss	Permiss
Signal group	5	2	0	1	6	0	3	0	0	7	0	0
Auxiliary Signal Groups												
Lead / Lag	Lead	-	-	Lead	-	-	Lead	-	-	Lead	-	-

Movement, Approach, & Intersection Results

V/C, Movement V/C Ratio	0.03	0.32	0.07	0.11	0.36	0.03	0.01	0.00	0.01	0.02	0.00	0.05
Intersection LOS	A											
Intersection V/C	0.570											

Intersection Level Of Service Report
Intersection 14: Irwindale Avenue (NS) at 1st Street (EW)

Control Type:	Signalized	Delay (sec / veh):	-
Analysis Method:	ICU 1	Level Of Service:	A
Analysis Period:	15 minutes	Volume to Capacity (v/c):	0.507

Intersection Setup

Name	Irwindale Avenue			Irwindale Avenue			1st Street			1st Street		
Approach	Northbound			Southbound			Eastbound			Westbound		
Lane Configuration												
Turning Movement	Left	Thru	Right	Left	Thru	Right	Left	Thru	Right	Left	Thru	Right
Lane Width [ft]	12.00	12.00	12.00	12.00	12.00	12.00	12.00	12.00	12.00	12.00	12.00	12.00
No. of Lanes in Pocket	1	0	1	1	0	1	1	0	1	1	0	1
Pocket Length [ft]	100.00	100.00	70.00	120.00	100.00	240.00	90.00	100.00	95.00	75.00	100.00	75.00
Speed [mph]	35.00			35.00			35.00			25.00		
Grade [%]	0.00			0.00			0.00			0.00		
Crosswalk	Yes			No			Yes			Yes		

Volumes

Name	Irwindale Avenue			Irwindale Avenue			1st Street			1st Street		
Base Volume Input [veh/h]	38	1187	4	14	827	130	54	0	21	0	0	8
Base Volume Adjustment Factor	1.0000	1.0000	1.0000	1.0000	1.0000	1.0000	1.0000	1.0000	1.0000	1.0000	1.0000	1.0000
Heavy Vehicles Percentage [%]	2.00	2.00	2.00	2.00	2.00	2.00	2.00	2.00	2.00	2.00	2.00	2.00
Growth Rate	1.01	1.01	1.01	1.01	1.01	1.01	1.01	1.01	1.01	1.01	1.01	1.01
In-Process Volume [veh/h]	0	0	0	0	0	0	0	0	0	0	0	0
Site-Generated Trips [veh/h]	0	0	0	0	0	0	0	0	0	0	0	0
Diverted Trips [veh/h]	0	0	0	0	0	0	0	0	0	0	0	0
Pass-by Trips [veh/h]	0	0	0	0	0	0	0	0	0	0	0	0
Existing Site Adjustment Volume [veh/h]	0	0	0	0	0	0	0	0	0	0	0	0
Other Volume [veh/h]	0	0	0	0	0	0	0	0	0	0	0	0
Total Hourly Volume [veh/h]	38	1199	4	14	835	131	55	0	21	0	0	8
Peak Hour Factor	1.0000	1.0000	1.0000	1.0000	1.0000	1.0000	1.0000	1.0000	1.0000	1.0000	1.0000	1.0000
Other Adjustment Factor	1.0000	1.0000	1.0000	1.0000	1.0000	1.0000	1.0000	1.0000	1.0000	1.0000	1.0000	1.0000
Total 15-Minute Volume [veh/h]	10	300	1	4	209	33	14	0	5	0	0	2
Total Analysis Volume [veh/h]	38	1199	4	14	835	131	55	0	21	0	0	8
Pedestrian Volume [ped/h]	0			0			0			0		
Bicycle Volume [bicycles/h]	0			0			0			0		

Intersection Settings

Cycle Length [s]	100
Lost time [s]	10.00

Phasing & Timing

Control Type	Permiss	Permiss	Permiss	Permiss	Permiss	Permiss	Split	Split	Split	Split	Split	Split
Signal group	0	2	0	0	6	0	0	8	0	0	4	0
Auxiliary Signal Groups												
Lead / Lag	-	-	-	-	-	-	-	-	-	-	-	-

Movement, Approach, & Intersection Results

V/C, Movement V/C Ratio	0.02	0.38	0.38	0.01	0.17	0.08	0.02	0.00	0.01	0.00	0.00	0.01
Intersection LOS	A											
Intersection V/C	0.507											

Intersection Level Of Service Report
Intersection 15: Irwindale Avenue (NS) at Gladstone Street (EW)

Control Type:	Signalized	Delay (sec / veh):	-
Analysis Method:	ICU 1	Level Of Service:	B
Analysis Period:	15 minutes	Volume to Capacity (v/c):	0.649

Intersection Setup

Name	Irwindale Avenue			Irwindale Avenue			Gladstone Street			Gladstone Street		
Approach	Northbound			Southbound			Eastbound			Westbound		
Lane Configuration												
Turning Movement	Left	Thru	Right	Left	Thru	Right	Left	Thru	Right	Left	Thru	Right
Lane Width [ft]	12.00	12.00	12.00	12.00	12.00	12.00	12.00	12.00	12.00	12.00	12.00	12.00
No. of Lanes in Pocket	1	0	0	2	0	0	1	0	0	1	0	1
Pocket Length [ft]	120.00	100.00	100.00	210.00	100.00	100.00	50.00	100.00	100.00	200.00	100.00	190.00
Speed [mph]	35.00			35.00			25.00			40.00		
Grade [%]	0.00			0.00			0.00			0.00		
Crosswalk	Yes			Yes			Yes			Yes		

Volumes

Name	Irwindale Avenue			Irwindale Avenue			Gladstone Street			Gladstone Street		
Base Volume Input [veh/h]	10	634	67	135	551	6	1	10	22	456	70	680
Base Volume Adjustment Factor	1.0000	1.0000	1.0000	1.0000	1.0000	1.0000	1.0000	1.0000	1.0000	1.0000	1.0000	1.0000
Heavy Vehicles Percentage [%]	2.00	2.00	2.00	2.00	2.00	2.00	2.00	2.00	2.00	2.00	2.00	2.00
Growth Rate	1.01	1.01	1.01	1.01	1.01	1.01	1.01	1.01	1.01	1.01	1.01	1.01
In-Process Volume [veh/h]	0	0	0	0	0	0	0	0	0	0	0	0
Site-Generated Trips [veh/h]	0	0	0	0	0	0	0	0	0	0	0	0
Diverted Trips [veh/h]	0	0	0	0	0	0	0	0	0	0	0	0
Pass-by Trips [veh/h]	0	0	0	0	0	0	0	0	0	0	0	0
Existing Site Adjustment Volume [veh/h]	0	0	0	0	0	0	0	0	0	0	0	0
Other Volume [veh/h]	0	0	0	0	0	0	0	0	0	0	0	0
Total Hourly Volume [veh/h]	10	640	68	136	557	6	1	10	22	461	71	687
Peak Hour Factor	1.0000	1.0000	1.0000	1.0000	1.0000	1.0000	1.0000	1.0000	1.0000	1.0000	1.0000	1.0000
Other Adjustment Factor	1.0000	1.0000	1.0000	1.0000	1.0000	1.0000	1.0000	1.0000	1.0000	1.0000	1.0000	1.0000
Total 15-Minute Volume [veh/h]	3	160	17	34	139	2	0	3	6	115	18	172
Total Analysis Volume [veh/h]	10	640	68	136	557	6	1	10	22	461	71	687
Pedestrian Volume [ped/h]	0			0			0			0		
Bicycle Volume [bicycles/h]	0			0			0			0		

Intersection Settings

Cycle Length [s]	100
Lost time [s]	10.00

Phasing & Timing

Control Type	Protecte	Permiss	Permiss	Protecte	Permiss	Permiss	Permiss	Permiss	Permiss	Permiss	Permiss	Overlap
Signal group	5	2	0	1	6	0	0	8	0	0	4	4
Auxiliary Signal Groups												1,4
Lead / Lag	Lead	-	-	Lead	-	-	-	-	-	-	-	-

Movement, Approach, & Intersection Results

V/C, Movement V/C Ratio	0.01	0.20	0.04	0.04	0.18	0.18	0.00	0.01	0.01	0.29	0.04	0.17
Intersection LOS	B											
Intersection V/C	0.649											

Intersection Level Of Service Report

Intersection 16: Irwindale Avenue (NS) at Arrow Highway (EW)

Control Type:	Signalized	Delay (sec / veh):	-
Analysis Method:	ICU 1	Level Of Service:	D
Analysis Period:	15 minutes	Volume to Capacity (v/c):	0.848

Intersection Setup

Name	Irwindale Avenue			Irwindale Avenue			Arrow Highway			Arrow Highway		
Approach	Northbound			Southbound			Eastbound			Westbound		
Lane Configuration												
Turning Movement	Left	Thru	Right	Left	Thru	Right	Left	Thru	Right	Left	Thru	Right
Lane Width [ft]	12.00	12.00	12.00	12.00	12.00	12.00	12.00	12.00	12.00	12.00	12.00	12.00
No. of Lanes in Pocket	1	0	0	1	0	1	2	0	0	1	0	0
Pocket Length [ft]	175.00	100.00	100.00	185.00	100.00	185.00	205.00	100.00	100.00	335.00	100.00	100.00
Speed [mph]	35.00			35.00			45.00			45.00		
Grade [%]	0.00			0.00			0.00			0.00		
Crosswalk	Yes			Yes			Yes			Yes		

Volumes

Name	Irwindale Avenue			Irwindale Avenue			Arrow Highway			Arrow Highway		
Base Volume Input [veh/h]	163	579	65	98	457	446	277	423	52	67	1022	98
Base Volume Adjustment Factor	1.0000	1.0000	1.0000	1.0000	1.0000	1.0000	1.0000	1.0000	1.0000	1.0000	1.0000	1.0000
Heavy Vehicles Percentage [%]	2.00	2.00	2.00	2.00	2.00	2.00	2.00	2.00	2.00	2.00	2.00	2.00
Growth Rate	1.01	1.01	1.01	1.01	1.01	1.01	1.01	1.01	1.01	1.01	1.01	1.01
In-Process Volume [veh/h]	0	0	0	0	0	0	0	0	0	0	0	0
Site-Generated Trips [veh/h]	0	0	0	0	0	0	0	0	0	0	0	0
Diverted Trips [veh/h]	0	0	0	0	0	0	0	0	0	0	0	0
Pass-by Trips [veh/h]	0	0	0	0	0	0	0	0	0	0	0	0
Existing Site Adjustment Volume [veh/h]	0	0	0	0	0	0	0	0	0	0	0	0
Other Volume [veh/h]	0	0	0	0	0	0	0	0	0	0	0	0
Total Hourly Volume [veh/h]	165	585	66	99	462	450	280	427	53	68	1032	99
Peak Hour Factor	1.0000	1.0000	1.0000	1.0000	1.0000	1.0000	1.0000	1.0000	1.0000	1.0000	1.0000	1.0000
Other Adjustment Factor	1.0000	1.0000	1.0000	1.0000	1.0000	1.0000	1.0000	1.0000	1.0000	1.0000	1.0000	1.0000
Total 15-Minute Volume [veh/h]	41	146	17	25	116	113	70	107	13	17	258	25
Total Analysis Volume [veh/h]	165	585	66	99	462	450	280	427	53	68	1032	99
Pedestrian Volume [ped/h]	0			0			0			0		
Bicycle Volume [bicycles/h]	0			0			0			0		

Intersection Settings

Cycle Length [s]	100
Lost time [s]	10.00

Phasing & Timing

Control Type	Protecte	Permiss	Permiss	Protecte	Permiss	Overlap	Protecte	Permiss	Permiss	Protecte	Permiss	Permiss
Signal group	5	2	0	1	6	6	3	8	0	7	4	0
Auxiliary Signal Groups						3,6						
Lead / Lag	Lead	-	-	Lead	-	-	Lead	-	-	Lead	-	-

Movement, Approach, & Intersection Results

V/C, Movement V/C Ratio	0.10	0.20	0.20	0.06	0.14	0.19	0.09	0.10	0.10	0.04	0.35	0.35
Intersection LOS	D											
Intersection V/C	0.848											

Intersection Level Of Service Report

Intersection 17: Vincent Avenue (NS) at Gladstone Street (EW)

Control Type:	Signalized	Delay (sec / veh):	-
Analysis Method:	ICU 1	Level Of Service:	A
Analysis Period:	15 minutes	Volume to Capacity (v/c):	0.525

Intersection Setup

Name	Vincent Avenue			Vincent Avenue			Gladstone Street			Gladstone Street		
Approach	Northbound			Southbound			Eastbound			Westbound		
Lane Configuration												
Turning Movement	Left	Thru	Right	Left	Thru	Right	Left	Thru	Right	Left	Thru	Right
Lane Width [ft]	12.00	12.00	12.00	12.00	12.00	12.00	12.00	12.00	12.00	12.00	12.00	12.00
No. of Lanes in Pocket	1	0	0	0	0	0	2	0	0	1	0	0
Pocket Length [ft]	195.00	100.00	100.00	100.00	100.00	100.00	230.00	100.00	100.00	175.00	100.00	100.00
Speed [mph]	45.00			25.00			45.00			45.00		
Grade [%]	0.00			0.00			0.00			0.00		
Crosswalk	Yes			Yes			No			Yes		

Volumes

Name	Vincent Avenue			Vincent Avenue			Gladstone Street			Gladstone Street		
Base Volume Input [veh/h]	265	29	147	16	8	38	43	97	64	178	942	2
Base Volume Adjustment Factor	1.0000	1.0000	1.0000	1.0000	1.0000	1.0000	1.0000	1.0000	1.0000	1.0000	1.0000	1.0000
Heavy Vehicles Percentage [%]	2.00	2.00	2.00	2.00	2.00	2.00	2.00	2.00	2.00	2.00	2.00	2.00
Growth Rate	1.01	1.01	1.01	1.01	1.01	1.01	1.01	1.01	1.01	1.01	1.01	1.01
In-Process Volume [veh/h]	0	0	0	0	0	0	0	0	0	0	0	0
Site-Generated Trips [veh/h]	0	0	0	0	0	0	0	0	0	0	0	0
Diverted Trips [veh/h]	0	0	0	0	0	0	0	0	0	0	0	0
Pass-by Trips [veh/h]	0	0	0	0	0	0	0	0	0	0	0	0
Existing Site Adjustment Volume [veh/h]	0	0	0	0	0	0	0	0	0	0	0	0
Other Volume [veh/h]	0	0	0	0	0	0	0	0	0	0	0	0
Total Hourly Volume [veh/h]	268	29	148	16	8	38	43	98	65	180	951	2
Peak Hour Factor	1.0000	1.0000	1.0000	1.0000	1.0000	1.0000	1.0000	1.0000	1.0000	1.0000	1.0000	1.0000
Other Adjustment Factor	1.0000	1.0000	1.0000	1.0000	1.0000	1.0000	1.0000	1.0000	1.0000	1.0000	1.0000	1.0000
Total 15-Minute Volume [veh/h]	67	7	37	4	2	10	11	25	16	45	238	1
Total Analysis Volume [veh/h]	268	29	148	16	8	38	43	98	65	180	951	2
Pedestrian Volume [ped/h]	0			0			0			0		
Bicycle Volume [bicycles/h]	0			0			0			0		

Intersection Settings

Cycle Length [s]	100
Lost time [s]	10.00

Phasing & Timing

Control Type	Split	Split	Split	Split	Split	Split	Protecte	Permiss	Permiss	Protecte	Permiss	Permiss
Signal group	0	2	0	0	6	0	3	8	0	7	4	0
Auxiliary Signal Groups												
Lead / Lag	-	-	-	-	-	-	Lead	-	-	Lead	-	-

Movement, Approach, & Intersection Results

V/C, Movement V/C Ratio	0.08	0.09	0.09	0.01	0.03	0.03	0.01	0.05	0.05	0.11	0.30	0.30
Intersection LOS	A											
Intersection V/C	0.525											

Intersection Level Of Service Report
Intersection 18: Vincent Avenue (NS) at Arrow Highway (EW)

Control Type:	Signalized	Delay (sec / veh):	-
Analysis Method:	ICU 1	Level Of Service:	B
Analysis Period:	15 minutes	Volume to Capacity (v/c):	0.682

Intersection Setup

Name	Vincent Avenue			Vincent Avenue			Arrow Highway			Arrow Highway		
Approach	Northbound			Southbound			Eastbound			Westbound		
Lane Configuration												
Turning Movement	Left	Thru	Right	Left	Thru	Right	Left	Thru	Right	Left	Thru	Right
Lane Width [ft]	12.00	12.00	12.00	12.00	12.00	12.00	12.00	12.00	12.00	12.00	12.00	12.00
No. of Lanes in Pocket	1	0	0	1	0	0	1	0	0	1	0	0
Pocket Length [ft]	200.00	100.00	100.00	200.00	100.00	100.00	215.00	100.00	100.00	160.00	100.00	100.00
Speed [mph]	45.00			45.00			45.00			45.00		
Grade [%]	0.00			0.00			0.00			0.00		
Crosswalk	Yes			Yes			Yes			Yes		

Volumes

Name	Vincent Avenue			Vincent Avenue			Arrow Highway			Arrow Highway		
Base Volume Input [veh/h]	161	285	88	22	189	65	58	378	88	138	1150	89
Base Volume Adjustment Factor	1.0000	1.0000	1.0000	1.0000	1.0000	1.0000	1.0000	1.0000	1.0000	1.0000	1.0000	1.0000
Heavy Vehicles Percentage [%]	2.00	2.00	2.00	2.00	2.00	2.00	2.00	2.00	2.00	2.00	2.00	2.00
Growth Rate	1.01	1.01	1.01	1.01	1.01	1.01	1.01	1.01	1.01	1.01	1.01	1.01
In-Process Volume [veh/h]	0	0	0	0	0	0	0	0	0	0	0	0
Site-Generated Trips [veh/h]	0	0	0	0	0	0	0	0	0	0	0	0
Diverted Trips [veh/h]	0	0	0	0	0	0	0	0	0	0	0	0
Pass-by Trips [veh/h]	0	0	0	0	0	0	0	0	0	0	0	0
Existing Site Adjustment Volume [veh/h]	0	0	0	0	0	0	0	0	0	0	0	0
Other Volume [veh/h]	0	0	0	0	0	0	0	0	0	0	0	0
Total Hourly Volume [veh/h]	163	288	89	22	191	66	59	382	89	139	1162	90
Peak Hour Factor	1.0000	1.0000	1.0000	1.0000	1.0000	1.0000	1.0000	1.0000	1.0000	1.0000	1.0000	1.0000
Other Adjustment Factor	1.0000	1.0000	1.0000	1.0000	1.0000	1.0000	1.0000	1.0000	1.0000	1.0000	1.0000	1.0000
Total 15-Minute Volume [veh/h]	41	72	22	6	48	17	15	96	22	35	291	23
Total Analysis Volume [veh/h]	163	288	89	22	191	66	59	382	89	139	1162	90
Pedestrian Volume [ped/h]	0			0			0			0		
Bicycle Volume [bicycles/h]	0			0			0			0		

Intersection Settings

Cycle Length [s]	100
Lost time [s]	10.00

Phasing & Timing

Control Type	Permiss	Permiss	Permiss	Permiss	Permiss	Permiss	Permiss	Permiss	Permiss	Permiss	Permiss	Permiss
Signal group	0	2	0	0	6	0	0	8	0	0	4	0
Auxiliary Signal Groups												
Lead / Lag	-	-	-	-	-	-	-	-	-	-	-	-

Movement, Approach, & Intersection Results

V/C, Movement V/C Ratio	0.10	0.12	0.12	0.01	0.08	0.08	0.04	0.12	0.06	0.09	0.36	0.06
Intersection LOS	B											
Intersection V/C	0.682											

Intersection Level Of Service Report
Intersection 21: Vincent Avenue (NS) at Cypress Street (EW)

Control Type:	Signalized	Delay (sec / veh):	-
Analysis Method:	ICU 1	Level Of Service:	B
Analysis Period:	15 minutes	Volume to Capacity (v/c):	0.647

Intersection Setup

Name	Vincent Avenue			Vincent Avenue			Cypress Street			Cypress Street		
Approach	Northbound			Southbound			Eastbound			Westbound		
Lane Configuration												
Turning Movement	Left	Thru	Right	Left	Thru	Right	Left	Thru	Right	Left	Thru	Right
Lane Width [ft]	12.00	12.00	12.00	12.00	12.00	12.00	12.00	12.00	12.00	12.00	12.00	12.00
No. of Lanes in Pocket	1	0	0	1	0	0	1	0	0	1	0	0
Pocket Length [ft]	120.00	100.00	100.00	120.00	100.00	100.00	100.00	100.00	100.00	150.00	100.00	100.00
Speed [mph]	40.00			45.00			40.00			40.00		
Grade [%]	0.00			0.00			0.00			0.00		
Crosswalk	Yes			Yes			Yes			Yes		

Volumes

Name	Vincent Avenue			Vincent Avenue			Cypress Street			Cypress Street		
Base Volume Input [veh/h]	162	467	125	65	398	71	34	303	50	190	792	78
Base Volume Adjustment Factor	1.0000	1.0000	1.0000	1.0000	1.0000	1.0000	1.0000	1.0000	1.0000	1.0000	1.0000	1.0000
Heavy Vehicles Percentage [%]	2.00	2.00	2.00	2.00	2.00	2.00	2.00	2.00	2.00	2.00	2.00	2.00
Growth Rate	1.01	1.01	1.01	1.01	1.01	1.01	1.01	1.01	1.01	1.01	1.01	1.01
In-Process Volume [veh/h]	0	0	0	0	0	0	0	0	0	0	0	0
Site-Generated Trips [veh/h]	0	0	0	0	0	0	0	0	0	0	0	0
Diverted Trips [veh/h]	0	0	0	0	0	0	0	0	0	0	0	0
Pass-by Trips [veh/h]	0	0	0	0	0	0	0	0	0	0	0	0
Existing Site Adjustment Volume [veh/h]	0	0	0	0	0	0	0	0	0	0	0	0
Other Volume [veh/h]	0	0	0	0	0	0	0	0	0	0	0	0
Total Hourly Volume [veh/h]	164	472	126	66	402	72	34	306	51	192	800	79
Peak Hour Factor	1.0000	1.0000	1.0000	1.0000	1.0000	1.0000	1.0000	1.0000	1.0000	1.0000	1.0000	1.0000
Other Adjustment Factor	1.0000	1.0000	1.0000	1.0000	1.0000	1.0000	1.0000	1.0000	1.0000	1.0000	1.0000	1.0000
Total 15-Minute Volume [veh/h]	41	118	32	17	101	18	9	77	13	48	200	20
Total Analysis Volume [veh/h]	164	472	126	66	402	72	34	306	51	192	800	79
Pedestrian Volume [ped/h]	0			0			0			0		
Bicycle Volume [bicycles/h]	0			0			0			0		

Intersection Settings

Cycle Length [s]	100
Lost time [s]	10.00

Phasing & Timing

Control Type	Permiss	Permiss	Permiss	Permiss	Permiss	Permiss	Permiss	Permiss	Permiss	Permiss	Permiss	Permiss
Signal group	0	2	0	0	6	0	0	8	0	0	4	0
Auxiliary Signal Groups												
Lead / Lag	-	-	-	-	-	-	-	-	-	-	-	-

Movement, Approach, & Intersection Results

V/C, Movement V/C Ratio	0.10	0.19	0.19	0.04	0.15	0.15	0.02	0.11	0.11	0.12	0.27	0.27
Intersection LOS	B											
Intersection V/C	0.647											

Intersection Level Of Service Report

Intersection 22: Vincent Avenue (NS) at San Bernardino Road (EW)

Control Type:	Signalized	Delay (sec / veh):	-
Analysis Method:	ICU 1	Level Of Service:	B
Analysis Period:	15 minutes	Volume to Capacity (v/c):	0.655

Intersection Setup

Name	Vincent Avenue			Vincent Avenue			San Bernardino Road			San Berardino Road		
Approach	Northbound			Southbound			Eastbound			Westbound		
Lane Configuration												
Turning Movement	Left	Thru	Right	Left	Thru	Right	Left	Thru	Right	Left	Thru	Right
Lane Width [ft]	12.00	12.00	12.00	12.00	12.00	12.00	12.00	12.00	12.00	12.00	12.00	12.00
No. of Lanes in Pocket	1	0	0	1	0	0	1	0	0	1	0	0
Pocket Length [ft]	120.00	100.00	100.00	150.00	100.00	100.00	150.00	100.00	100.00	165.00	100.00	100.00
Speed [mph]	35.00			40.00			40.00			40.00		
Grade [%]	0.00			0.00			0.00			0.00		
Crosswalk	Yes			Yes			Yes			Yes		

Volumes

Name	Vincent Avenue			Vincent Avenue			San Bernardino Road			San Berardino Road		
Base Volume Input [veh/h]	106	546	50	70	556	99	82	330	67	99	597	131
Base Volume Adjustment Factor	1.0000	1.0000	1.0000	1.0000	1.0000	1.0000	1.0000	1.0000	1.0000	1.0000	1.0000	1.0000
Heavy Vehicles Percentage [%]	2.00	2.00	2.00	2.00	2.00	2.00	2.00	2.00	2.00	2.00	2.00	2.00
Growth Rate	1.01	1.01	1.01	1.01	1.01	1.01	1.01	1.01	1.01	1.01	1.01	1.01
In-Process Volume [veh/h]	0	0	0	0	0	0	0	0	0	0	0	0
Site-Generated Trips [veh/h]	0	0	0	0	0	0	0	0	0	0	0	0
Diverted Trips [veh/h]	0	0	0	0	0	0	0	0	0	0	0	0
Pass-by Trips [veh/h]	0	0	0	0	0	0	0	0	0	0	0	0
Existing Site Adjustment Volume [veh/h]	0	0	0	0	0	0	0	0	0	0	0	0
Other Volume [veh/h]	0	0	0	0	0	0	0	0	0	0	0	0
Total Hourly Volume [veh/h]	107	551	51	71	562	100	83	333	68	100	603	132
Peak Hour Factor	1.0000	1.0000	1.0000	1.0000	1.0000	1.0000	1.0000	1.0000	1.0000	1.0000	1.0000	1.0000
Other Adjustment Factor	1.0000	1.0000	1.0000	1.0000	1.0000	1.0000	1.0000	1.0000	1.0000	1.0000	1.0000	1.0000
Total 15-Minute Volume [veh/h]	27	138	13	18	141	25	21	83	17	25	151	33
Total Analysis Volume [veh/h]	107	551	51	71	562	100	83	333	68	100	603	132
Pedestrian Volume [ped/h]	0			0			0			0		
Bicycle Volume [bicycles/h]	0			0			0			0		

Intersection Settings

Cycle Length [s]	100
Lost time [s]	10.00

Phasing & Timing

Control Type	Permiss	Permiss	Permiss	Permiss	Permiss	Permiss	Protecte	Permiss	Permiss	Protecte	Permiss	Permiss
Signal group	0	2	0	0	6	0	3	8	0	7	4	0
Auxiliary Signal Groups												
Lead / Lag	-	-	-	-	-	-	Lead	-	-	Lead	-	-

Movement, Approach, & Intersection Results

V/C, Movement V/C Ratio	0.07	0.19	0.19	0.04	0.21	0.21	0.05	0.13	0.13	0.06	0.23	0.23
Intersection LOS	B											
Intersection V/C	0.655											

Intersection Level Of Service Report
Intersection 23: Vincent Avenue (NS) at Badillo Street (EW)

Control Type:	Signalized	Delay (sec / veh):	-
Analysis Method:	ICU 1	Level Of Service:	B
Analysis Period:	15 minutes	Volume to Capacity (v/c):	0.612

Intersection Setup

Name	Vincent Avenue			Vincent Avenue			Dadillo Street			Badillo Street		
Approach	Northbound			Southbound			Eastbound			Westbound		
Lane Configuration												
Turning Movement	Left	Thru	Right	Left	Thru	Right	Left	Thru	Right	Left	Thru	Right
Lane Width [ft]	12.00	12.00	12.00	12.00	12.00	12.00	12.00	12.00	12.00	12.00	12.00	12.00
No. of Lanes in Pocket	1	0	0	1	0	0	1	0	0	1	0	0
Pocket Length [ft]	200.00	100.00	100.00	190.00	100.00	100.00	195.00	100.00	100.00	195.00	100.00	100.00
Speed [mph]	40.00			35.00			45.00			45.00		
Grade [%]	0.00			0.00			0.00			0.00		
Crosswalk	Yes			Yes			Yes			Yes		

Volumes

Name	Vincent Avenue			Vincent Avenue			Dadillo Street			Badillo Street		
Base Volume Input [veh/h]	105	629	177	42	580	121	31	506	113	110	770	88
Base Volume Adjustment Factor	1.0000	1.0000	1.0000	1.0000	1.0000	1.0000	1.0000	1.0000	1.0000	1.0000	1.0000	1.0000
Heavy Vehicles Percentage [%]	2.00	2.00	2.00	2.00	2.00	2.00	2.00	2.00	2.00	2.00	2.00	2.00
Growth Rate	1.01	1.01	1.01	1.01	1.01	1.01	1.01	1.01	1.01	1.01	1.01	1.01
In-Process Volume [veh/h]	0	0	0	0	0	0	0	0	0	0	0	0
Site-Generated Trips [veh/h]	0	0	0	0	0	0	0	0	0	0	0	0
Diverted Trips [veh/h]	0	0	0	0	0	0	0	0	0	0	0	0
Pass-by Trips [veh/h]	0	0	0	0	0	0	0	0	0	0	0	0
Existing Site Adjustment Volume [veh/h]	0	0	0	0	0	0	0	0	0	0	0	0
Other Volume [veh/h]	0	0	0	0	0	0	0	0	0	0	0	0
Total Hourly Volume [veh/h]	106	635	179	42	586	122	31	511	114	111	778	89
Peak Hour Factor	1.0000	1.0000	1.0000	1.0000	1.0000	1.0000	1.0000	1.0000	1.0000	1.0000	1.0000	1.0000
Other Adjustment Factor	1.0000	1.0000	1.0000	1.0000	1.0000	1.0000	1.0000	1.0000	1.0000	1.0000	1.0000	1.0000
Total 15-Minute Volume [veh/h]	27	159	45	11	147	31	8	128	29	28	195	22
Total Analysis Volume [veh/h]	106	635	179	42	586	122	31	511	114	111	778	89
Pedestrian Volume [ped/h]	0			0			0			0		
Bicycle Volume [bicycles/h]	0			0			0			0		

Intersection Settings

Cycle Length [s]	100
Lost time [s]	10.00

Phasing & Timing

Control Type	Protecte	Permiss	Permiss	Protecte	Permiss	Permiss	Protecte	Permiss	Permiss	Protecte	Permiss	Permiss
Signal group	5	2	0	1	6	0	3	8	0	7	4	0
Auxiliary Signal Groups												
Lead / Lag	Lead	-	-	Lead	-	-	Lead	-	-	Lead	-	-

Movement, Approach, & Intersection Results

V/C, Movement V/C Ratio	0.07	0.20	0.11	0.03	0.18	0.08	0.02	0.16	0.07	0.07	0.24	0.06
Intersection LOS	B											
Intersection V/C	0.612											

Intersection Level Of Service Report
Intersection 24: Vincent Avenue (NS) at Puente Avenue (EW)

Control Type:	Signalized	Delay (sec / veh):	-
Analysis Method:	ICU 1	Level Of Service:	A
Analysis Period:	15 minutes	Volume to Capacity (v/c):	0.581

Intersection Setup

Name	Vincent Avenue			Vincent Avenue			Puente Avenue			Puente Avenue		
Approach	Northbound			Southbound			Eastbound			Westbound		
Lane Configuration												
Turning Movement	Left	Thru	Right	Left	Thru	Right	Left	Thru	Right	Left	Thru	Right
Lane Width [ft]	12.00	12.00	12.00	12.00	12.00	12.00	12.00	12.00	12.00	12.00	12.00	12.00
No. of Lanes in Pocket	1	0	0	1	0	0	0	0	0	0	0	0
Pocket Length [ft]	195.00	100.00	100.00	195.00	100.00	100.00	100.00	100.00	100.00	100.00	100.00	100.00
Speed [mph]	40.00			40.00			40.00			40.00		
Grade [%]	0.00			0.00			0.00			0.00		
Crosswalk	Yes			Yes			Yes			Yes		

Volumes

Name	Vincent Avenue			Vincent Avenue			Puente Avenue			Puente Avenue		
Base Volume Input [veh/h]	67	687	31	57	660	69	42	349	66	74	563	96
Base Volume Adjustment Factor	1.0000	1.0000	1.0000	1.0000	1.0000	1.0000	1.0000	1.0000	1.0000	1.0000	1.0000	1.0000
Heavy Vehicles Percentage [%]	2.00	2.00	2.00	2.00	2.00	2.00	2.00	2.00	2.00	2.00	2.00	2.00
Growth Rate	1.01	1.01	1.01	1.01	1.01	1.01	1.01	1.01	1.01	1.01	1.01	1.01
In-Process Volume [veh/h]	0	0	0	0	0	0	0	0	0	0	0	0
Site-Generated Trips [veh/h]	0	0	0	0	0	0	0	0	0	0	0	0
Diverted Trips [veh/h]	0	0	0	0	0	0	0	0	0	0	0	0
Pass-by Trips [veh/h]	0	0	0	0	0	0	0	0	0	0	0	0
Existing Site Adjustment Volume [veh/h]	0	0	0	0	0	0	0	0	0	0	0	0
Other Volume [veh/h]	0	0	0	0	0	0	0	0	0	0	0	0
Total Hourly Volume [veh/h]	68	694	31	58	667	70	42	352	67	75	569	97
Peak Hour Factor	1.0000	1.0000	1.0000	1.0000	1.0000	1.0000	1.0000	1.0000	1.0000	1.0000	1.0000	1.0000
Other Adjustment Factor	1.0000	1.0000	1.0000	1.0000	1.0000	1.0000	1.0000	1.0000	1.0000	1.0000	1.0000	1.0000
Total 15-Minute Volume [veh/h]	17	174	8	15	167	18	11	88	17	19	142	24
Total Analysis Volume [veh/h]	68	694	31	58	667	70	42	352	67	75	569	97
Pedestrian Volume [ped/h]	0			0			0			0		
Bicycle Volume [bicycles/h]	0			0			0			0		

Intersection Settings

Cycle Length [s]	100
Lost time [s]	10.00

Phasing & Timing

Control Type	Permiss	Permiss	Permiss	Permiss	Permiss	Permiss	Permiss	Permiss	Permiss	Permiss	Permiss	Permiss
Signal group	0	2	0	0	6	0	0	8	0	0	4	0
Auxiliary Signal Groups												
Lead / Lag	-	-	-	-	-	-	-	-	-	-	-	-

Movement, Approach, & Intersection Results

V/C, Movement V/C Ratio	0.04	0.22	0.02	0.04	0.21	0.04	0.03	0.12	0.04	0.05	0.20	0.06
Intersection LOS	A											
Intersection V/C	0.581											

Intersection Level Of Service Report
Intersection 25: Vincent Avenue (NS) at Rowland Avenue (EW)

Control Type:	Signalized	Delay (sec / veh):	-
Analysis Method:	ICU 1	Level Of Service:	A
Analysis Period:	15 minutes	Volume to Capacity (v/c):	0.539

Intersection Setup

Name	Vincent Avenue			Vincent Avenue			Rowland Avenue			Rowland Avenue		
Approach	Northbound			Southbound			Eastbound			Westbound		
Lane Configuration												
Turning Movement	Left	Thru	Right	Left	Thru	Right	Left	Thru	Right	Left	Thru	Right
Lane Width [ft]	12.00	12.00	12.00	12.00	12.00	12.00	12.00	12.00	12.00	12.00	12.00	12.00
No. of Lanes in Pocket	1	0	0	1	0	0	0	0	0	0	0	0
Pocket Length [ft]	145.00	100.00	100.00	125.00	100.00	100.00	100.00	100.00	100.00	100.00	100.00	100.00
Speed [mph]	35.00			40.00			35.00			35.00		
Grade [%]	0.00			0.00			0.00			0.00		
Crosswalk	Yes			Yes			Yes			Yes		

Volumes

Name	Vincent Avenue			Vincent Avenue			Rowland Avenue			Rowland Avenue		
Base Volume Input [veh/h]	34	712	55	36	756	12	32	133	41	119	131	62
Base Volume Adjustment Factor	1.0000	1.0000	1.0000	1.0000	1.0000	1.0000	1.0000	1.0000	1.0000	1.0000	1.0000	1.0000
Heavy Vehicles Percentage [%]	2.00	2.00	2.00	2.00	2.00	2.00	2.00	2.00	2.00	2.00	2.00	2.00
Growth Rate	1.01	1.01	1.01	1.01	1.01	1.01	1.01	1.01	1.01	1.01	1.01	1.01
In-Process Volume [veh/h]	0	0	0	0	0	0	0	0	0	0	0	0
Site-Generated Trips [veh/h]	0	0	0	0	0	0	0	0	0	0	0	0
Diverted Trips [veh/h]	0	0	0	0	0	0	0	0	0	0	0	0
Pass-by Trips [veh/h]	0	0	0	0	0	0	0	0	0	0	0	0
Existing Site Adjustment Volume [veh/h]	0	0	0	0	0	0	0	0	0	0	0	0
Other Volume [veh/h]	0	0	0	0	0	0	0	0	0	0	0	0
Total Hourly Volume [veh/h]	34	719	56	36	764	12	32	134	41	120	132	63
Peak Hour Factor	1.0000	1.0000	1.0000	1.0000	1.0000	1.0000	1.0000	1.0000	1.0000	1.0000	1.0000	1.0000
Other Adjustment Factor	1.0000	1.0000	1.0000	1.0000	1.0000	1.0000	1.0000	1.0000	1.0000	1.0000	1.0000	1.0000
Total 15-Minute Volume [veh/h]	9	180	14	9	191	3	8	34	10	30	33	16
Total Analysis Volume [veh/h]	34	719	56	36	764	12	32	134	41	120	132	63
Pedestrian Volume [ped/h]	0			0			0			0		
Bicycle Volume [bicycles/h]	0			0			0			0		

Intersection Settings

Cycle Length [s]	100
Lost time [s]	10.00

Phasing & Timing

Control Type	Protecte	Permiss	Permiss	Protecte	Permiss	Permiss	Permiss	Permiss	Permiss	Permiss	Permiss	Permiss
Signal group	5	2	0	1	6	0	0	8	0	0	4	0
Auxiliary Signal Groups												
Lead / Lag	Lead	-	-	Lead	-	-	-	-	-	-	-	-

Movement, Approach, & Intersection Results

V/C, Movement V/C Ratio	0.02	0.22	0.04	0.02	0.24	0.01	0.02	0.10	0.03	0.08	0.16	0.04
Intersection LOS	A											
Intersection V/C	0.539											

Intersection Level Of Service Report
Intersection 26: Vincent Avenue (NS) at Workman Avenue (EW)

Control Type:	Signalized	Delay (sec / veh):	-
Analysis Method:	ICU 1	Level Of Service:	B
Analysis Period:	15 minutes	Volume to Capacity (v/c):	0.614

Intersection Setup

Name	Vincent Avenue			Vincent Avenue			Workman Avenue			Workman Avenue		
Approach	Northbound			Southbound			Eastbound			Westbound		
Lane Configuration												
Turning Movement	Left	Thru	Right	Left	Thru	Right	Left	Thru	Right	Left	Thru	Right
Lane Width [ft]	12.00	12.00	12.00	12.00	12.00	12.00	12.00	12.00	12.00	12.00	12.00	12.00
No. of Lanes in Pocket	1	0	0	1	0	0	0	0	0	0	0	0
Pocket Length [ft]	120.00	100.00	100.00	180.00	100.00	100.00	100.00	100.00	100.00	100.00	100.00	100.00
Speed [mph]	35.00			40.00			35.00			35.00		
Grade [%]	0.00			0.00			0.00			0.00		
Crosswalk	Yes			Yes			Yes			Yes		

Volumes

Name	Vincent Avenue			Vincent Avenue			Workman Avenue			Workman Avenue		
Base Volume Input [veh/h]	67	675	110	42	816	61	21	137	49	131	188	74
Base Volume Adjustment Factor	1.0000	1.0000	1.0000	1.0000	1.0000	1.0000	1.0000	1.0000	1.0000	1.0000	1.0000	1.0000
Heavy Vehicles Percentage [%]	2.00	2.00	2.00	2.00	2.00	2.00	2.00	2.00	2.00	2.00	2.00	2.00
Growth Rate	1.01	1.01	1.01	1.01	1.01	1.01	1.01	1.01	1.01	1.01	1.01	1.01
In-Process Volume [veh/h]	0	0	0	0	0	0	0	0	0	0	0	0
Site-Generated Trips [veh/h]	0	0	0	0	0	0	0	0	0	0	0	0
Diverted Trips [veh/h]	0	0	0	0	0	0	0	0	0	0	0	0
Pass-by Trips [veh/h]	0	0	0	0	0	0	0	0	0	0	0	0
Existing Site Adjustment Volume [veh/h]	0	0	0	0	0	0	0	0	0	0	0	0
Other Volume [veh/h]	0	0	0	0	0	0	0	0	0	0	0	0
Total Hourly Volume [veh/h]	68	682	111	42	824	62	21	138	49	132	190	75
Peak Hour Factor	1.0000	1.0000	1.0000	1.0000	1.0000	1.0000	1.0000	1.0000	1.0000	1.0000	1.0000	1.0000
Other Adjustment Factor	1.0000	1.0000	1.0000	1.0000	1.0000	1.0000	1.0000	1.0000	1.0000	1.0000	1.0000	1.0000
Total 15-Minute Volume [veh/h]	17	171	28	11	206	16	5	35	12	33	48	19
Total Analysis Volume [veh/h]	68	682	111	42	824	62	21	138	49	132	190	75
Pedestrian Volume [ped/h]	0			0			0			0		
Bicycle Volume [bicycles/h]	0			0			0			0		

Intersection Settings

Cycle Length [s]	100
Lost time [s]	10.00

Phasing & Timing

Control Type	Protecte	Permiss	Permiss	Protecte	Permiss	Permiss	Permiss	Permiss	Permiss	Permiss	Permiss	Permiss
Signal group	5	2	0	1	6	0	0	8	0	0	4	0
Auxiliary Signal Groups												
Lead / Lag	Lead	-	-	Lead	-	-	-	-	-	-	-	-

Movement, Approach, & Intersection Results

V/C, Movement V/C Ratio	0.04	0.21	0.07	0.03	0.26	0.04	0.01	0.10	0.03	0.08	0.20	0.05
Intersection LOS	B											
Intersection V/C	0.614											

Intersection Level Of Service Report
Intersection 27: Vincent Avenue (NS) at I-10 WB Ramps (EW)

Control Type:	Signalized	Delay (sec / veh):	-
Analysis Method:	ICU 1	Level Of Service:	A
Analysis Period:	15 minutes	Volume to Capacity (v/c):	0.437

Intersection Setup

Name	Vincent Avenue		Vincent Avenue		I-10 WB Ramps	
Approach	Northbound		Southbound		Westbound	
Lane Configuration						
Turning Movement	Thru	Right	Left	Thru	Left	Right
Lane Width [ft]	12.00	12.00	12.00	12.00	12.00	12.00
No. of Lanes in Pocket	0	0	0	0	0	1
Pocket Length [ft]	100.00	100.00	100.00	100.00	100.00	220.00
Speed [mph]	35.00		35.00		35.00	
Grade [%]	0.00		0.00		0.00	
Crosswalk	No		No		Yes	

Volumes

Name	Vincent Avenue		Vincent Avenue		I-10 WB Ramps	
Base Volume Input [veh/h]	741	0	0	1011	393	194
Base Volume Adjustment Factor	1.0000	1.0000	1.0000	1.0000	1.0000	1.0000
Heavy Vehicles Percentage [%]	2.00	2.00	2.00	2.00	2.00	2.00
Growth Rate	1.01	1.00	1.00	1.01	1.01	1.01
In-Process Volume [veh/h]	0	0	0	0	0	0
Site-Generated Trips [veh/h]	0	0	0	0	0	0
Diverted Trips [veh/h]	0	0	0	0	0	0
Pass-by Trips [veh/h]	0	0	0	0	0	0
Existing Site Adjustment Volume [veh/h]	0	0	0	0	0	0
Other Volume [veh/h]	0	0	0	0	0	0
Total Hourly Volume [veh/h]	748	0	0	1021	397	196
Peak Hour Factor	1.0000	1.0000	1.0000	1.0000	1.0000	1.0000
Other Adjustment Factor	1.0000	1.0000	1.0000	1.0000	1.0000	1.0000
Total 15-Minute Volume [veh/h]	187	0	0	255	99	49
Total Analysis Volume [veh/h]	748	0	0	1021	397	196
Pedestrian Volume [ped/h]	0		0		0	
Bicycle Volume [bicycles/h]	0		0		0	

Intersection Settings

Cycle Length [s]	100
Lost time [s]	10.00

Phasing & Timing

Control Type	Permissive	Permissive	Permissive	Permissive	Split	Split
Signal group	2	0	0	6	7	0
Auxiliary Signal Groups						
Lead / Lag	-	-	-	-	Lead	-

Movement, Approach, & Intersection Results

V/C, Movement V/C Ratio	0.16	0.00	0.00	0.21	0.12	0.12
Intersection LOS	A					
Intersection V/C	0.437					

Intersection Level Of Service Report
Intersection 28: Vincent Avenue (NS) at I-10 EB Ramps (EW)

Control Type:	Signalized	Delay (sec / veh):	-
Analysis Method:	ICU 1	Level Of Service:	A
Analysis Period:	15 minutes	Volume to Capacity (v/c):	0.486

Intersection Setup

Name	Vincent Avenue			Vincent Avenue			I-10 EB Ramps			I-10 EB Ramps		
Approach	Northbound			Southbound			Eastbound			Westbound		
Lane Configuration												
Turning Movement	Left	Thru	Right	Left	Thru	Right	Left	Thru	Right	Left	Thru	Right
Lane Width [ft]	12.00	12.00	12.00	12.00	12.00	12.00	12.00	12.00	12.00	12.00	12.00	12.00
No. of Lanes in Pocket	0	0	0	0	0	0	0	0	0	0	0	0
Pocket Length [ft]	100.00	100.00	100.00	100.00	100.00	100.00	100.00	100.00	100.00	100.00	100.00	100.00
Speed [mph]		35.00			35.00			35.00			35.00	
Grade [%]		0.00			0.00			0.00			0.00	
Crosswalk		No			No			Yes			Yes	

Volumes

Name	Vincent Avenue			Vincent Avenue			I-10 EB Ramps			I-10 EB Ramps		
Base Volume Input [veh/h]	0	527	656	0	1045	358	217	0	243	0	0	0
Base Volume Adjustment Factor	1.0000	1.0000	1.0000	1.0000	1.0000	1.0000	1.0000	1.0000	1.0000	1.0000	1.0000	1.0000
Heavy Vehicles Percentage [%]	2.00	2.00	2.00	2.00	2.00	2.00	2.00	2.00	2.00	2.00	2.00	2.00
Growth Rate	1.00	1.01	1.01	1.00	1.01	1.01	1.01	1.00	1.01	1.00	1.00	1.00
In-Process Volume [veh/h]	0	0	0	0	0	0	0	0	0	0	0	0
Site-Generated Trips [veh/h]	0	0	0	0	0	0	0	0	0	0	0	0
Diverted Trips [veh/h]	0	0	0	0	0	0	0	0	0	0	0	0
Pass-by Trips [veh/h]	0	0	0	0	0	0	0	0	0	0	0	0
Existing Site Adjustment Volume [veh/h]	0	0	0	0	0	0	0	0	0	0	0	0
Other Volume [veh/h]	0	0	0	0	0	0	0	0	0	0	0	0
Total Hourly Volume [veh/h]	0	532	663	0	1055	362	219	0	245	0	0	0
Peak Hour Factor	1.0000	1.0000	1.0000	1.0000	1.0000	1.0000	1.0000	1.0000	1.0000	1.0000	1.0000	1.0000
Other Adjustment Factor	1.0000	1.0000	1.0000	1.0000	1.0000	1.0000	1.0000	1.0000	1.0000	1.0000	1.0000	1.0000
Total 15-Minute Volume [veh/h]	0	133	166	0	264	91	55	0	61	0	0	0
Total Analysis Volume [veh/h]	0	532	663	0	1055	362	219	0	245	0	0	0
Pedestrian Volume [ped/h]		0			0			0			0	
Bicycle Volume [bicycles/h]		0			0			0			0	

Intersection Settings

Cycle Length [s]	100
Lost time [s]	10.00

Phasing & Timing

Control Type	Permiss	Permiss	Permiss	Permiss	Permiss	Permiss	Split	Permiss	Split	Permiss	Permiss	Permiss
Signal group	0	2	0	0	6	0	3	0	0	0	0	0
Auxiliary Signal Groups												
Lead / Lag	-	-	-	-	-	-	Lead	-	-	-	-	-

Movement, Approach, & Intersection Results

V/C, Movement V/C Ratio	0.00	0.25	0.25	0.00	0.22	0.23	0.14	0.00	0.08	0.00	0.00	0.00
Intersection LOS	A											
Intersection V/C	0.486											

Intersection Level Of Service Report

Intersection 29: Vernon Ave/Lark Ellen Ave (NS) at Gladstone Street (EW)

Control Type:	Signalized	Delay (sec / veh):	-
Analysis Method:	ICU 1	Level Of Service:	B
Analysis Period:	15 minutes	Volume to Capacity (v/c):	0.686

Intersection Setup

Name	Lark Ellen Avenue			Vernon Avenue			Gladstone Street			Gladstone Street		
Approach	Northbound			Southbound			Eastbound			Westbound		
Lane Configuration												
Turning Movement	Left	Thru	Right	Left	Thru	Right	Left	Thru	Right	Left	Thru	Right
Lane Width [ft]	12.00	12.00	12.00	12.00	12.00	12.00	12.00	12.00	12.00	12.00	12.00	12.00
No. of Lanes in Pocket	1	0	0	1	0	0	1	0	0	1	0	0
Pocket Length [ft]	60.00	100.00	100.00	60.00	100.00	100.00	70.00	100.00	100.00	60.00	100.00	100.00
Speed [mph]	35.00			35.00			45.00			45.00		
Grade [%]	0.00			0.00			0.00			0.00		
Crosswalk	Yes			Yes			Yes			Yes		

Volumes

Name	Lark Ellen Avenue			Vernon Avenue			Gladstone Street			Gladstone Street		
Base Volume Input [veh/h]	76	423	178	23	426	88	51	198	32	150	825	39
Base Volume Adjustment Factor	1.0000	1.0000	1.0000	1.0000	1.0000	1.0000	1.0000	1.0000	1.0000	1.0000	1.0000	1.0000
Heavy Vehicles Percentage [%]	2.00	2.00	2.00	2.00	2.00	2.00	2.00	2.00	2.00	2.00	2.00	2.00
Growth Rate	1.01	1.01	1.01	1.01	1.01	1.01	1.01	1.01	1.01	1.01	1.01	1.01
In-Process Volume [veh/h]	0	0	0	0	0	0	0	0	0	0	0	0
Site-Generated Trips [veh/h]	0	0	0	0	0	0	0	0	0	0	0	0
Diverted Trips [veh/h]	0	0	0	0	0	0	0	0	0	0	0	0
Pass-by Trips [veh/h]	0	0	0	0	0	0	0	0	0	0	0	0
Existing Site Adjustment Volume [veh/h]	0	0	0	0	0	0	0	0	0	0	0	0
Other Volume [veh/h]	0	0	0	0	0	0	0	0	0	0	0	0
Total Hourly Volume [veh/h]	77	427	180	23	430	89	52	200	32	152	833	39
Peak Hour Factor	1.0000	1.0000	1.0000	1.0000	1.0000	1.0000	1.0000	1.0000	1.0000	1.0000	1.0000	1.0000
Other Adjustment Factor	1.0000	1.0000	1.0000	1.0000	1.0000	1.0000	1.0000	1.0000	1.0000	1.0000	1.0000	1.0000
Total 15-Minute Volume [veh/h]	19	107	45	6	108	22	13	50	8	38	208	10
Total Analysis Volume [veh/h]	77	427	180	23	430	89	52	200	32	152	833	39
Pedestrian Volume [ped/h]	0			0			0			0		
Bicycle Volume [bicycles/h]	0			0			0			0		

Intersection Settings

Cycle Length [s]	100
Lost time [s]	10.00

Phasing & Timing

Control Type	Permiss	Permiss	Permiss	Permiss	Permiss	Permiss	Permiss	Permiss	Permiss	Permiss	Permiss	Permiss
Signal group	0	2	0	0	6	0	0	8	0	0	4	0
Auxiliary Signal Groups												
Lead / Lag	-	-	-	-	-	-	-	-	-	-	-	-

Movement, Approach, & Intersection Results

V/C, Movement V/C Ratio	0.05	0.27	0.11	0.01	0.16	0.16	0.03	0.07	0.07	0.10	0.27	0.27
Intersection LOS	B											
Intersection V/C	0.686											

Intersection Level Of Service Report
Intersection 30: Azusa Avenue (NS) at I-210 EB Ramps (EW)

Control Type:	Signalized	Delay (sec / veh):	-
Analysis Method:	ICU 1	Level Of Service:	B
Analysis Period:	15 minutes	Volume to Capacity (v/c):	0.665

Intersection Setup

Name	Azusa Avenue		Azusa Avenue		I-210 EB Ramps	
Approach	Northbound		Southbound		Eastbound	
Lane Configuration						
Turning Movement	Left	Thru	Thru	Right	Left	Right
Lane Width [ft]	12.00	12.00	12.00	12.00	12.00	12.00
No. of Lanes in Pocket	0	0	0	0	0	0
Pocket Length [ft]	100.00	100.00	100.00	100.00	100.00	100.00
Speed [mph]	35.00		35.00		35.00	
Grade [%]	0.00		0.00		0.00	
Crosswalk	No		No		Yes	

Volumes

Name	Azusa Avenue		Azusa Avenue		I-210 EB Ramps	
Base Volume Input [veh/h]	0	1128	627	0	193	331
Base Volume Adjustment Factor	1.0000	1.0000	1.0000	1.0000	1.0000	1.0000
Heavy Vehicles Percentage [%]	2.00	2.00	2.00	2.00	2.00	2.00
Growth Rate	1.00	1.01	1.01	1.00	1.01	1.01
In-Process Volume [veh/h]	0	0	0	0	0	0
Site-Generated Trips [veh/h]	0	0	0	0	0	0
Diverted Trips [veh/h]	0	0	0	0	0	0
Pass-by Trips [veh/h]	0	0	0	0	0	0
Existing Site Adjustment Volume [veh/h]	0	0	0	0	0	0
Other Volume [veh/h]	0	0	0	0	0	0
Total Hourly Volume [veh/h]	0	1139	633	0	195	334
Peak Hour Factor	1.0000	1.0000	1.0000	1.0000	1.0000	1.0000
Other Adjustment Factor	1.0000	1.0000	1.0000	1.0000	1.0000	1.0000
Total 15-Minute Volume [veh/h]	0	285	158	0	49	84
Total Analysis Volume [veh/h]	0	1139	633	0	195	334
Pedestrian Volume [ped/h]	0		0		0	
Bicycle Volume [bicycles/h]	0		0		0	

Intersection Settings

Cycle Length [s]	100
Lost time [s]	10.00

Phasing & Timing

Control Type	Permissive	Permissive	Permissive	Permissive	Split	Split
Signal group	0	2	6	0	3	0
Auxiliary Signal Groups						
Lead / Lag	-	-	-	-	Lead	-

Movement, Approach, & Intersection Results

V/C, Movement V/C Ratio	0.00	0.36	0.20	0.00	0.06	0.21
Intersection LOS	B					
Intersection V/C	0.665					

Intersection Level Of Service Report

Intersection 31: Azusa Avenue (NS) at Paramount Street (EW)

Control Type:	Signalized	Delay (sec / veh):	-
Analysis Method:	ICU 1	Level Of Service:	A
Analysis Period:	15 minutes	Volume to Capacity (v/c):	0.592

Intersection Setup

Name	Azusa Avenue			Azusa Avenue			Paramount Street			Paramount Street		
Approach	Northbound			Southbound			Eastbound			Westbound		
Lane Configuration												
Turning Movement	Left	Thru	Right	Left	Thru	Right	Left	Thru	Right	Left	Thru	Right
Lane Width [ft]	12.00	12.00	12.00	12.00	12.00	12.00	12.00	12.00	12.00	12.00	12.00	12.00
No. of Lanes in Pocket	1	0	0	1	0	0	0	0	0	0	0	0
Pocket Length [ft]	200.00	100.00	100.00	110.00	100.00	100.00	100.00	100.00	100.00	100.00	100.00	100.00
Speed [mph]	35.00			35.00			25.00			15.00		
Grade [%]	0.00			0.00			0.00			0.00		
Crosswalk	No			Yes			Yes			Yes		

Volumes

Name	Azusa Avenue			Azusa Avenue			Paramount Street			Paramount Street		
Base Volume Input [veh/h]	127	936	0	11	819	75	162	0	79	2	0	8
Base Volume Adjustment Factor	1.0000	1.0000	1.0000	1.0000	1.0000	1.0000	1.0000	1.0000	1.0000	1.0000	1.0000	1.0000
Heavy Vehicles Percentage [%]	2.00	2.00	2.00	2.00	2.00	2.00	2.00	2.00	2.00	2.00	2.00	2.00
Growth Rate	1.01	1.01	1.01	1.01	1.01	1.01	1.01	1.01	1.01	1.01	1.01	1.01
In-Process Volume [veh/h]	0	0	0	0	0	0	0	0	0	0	0	0
Site-Generated Trips [veh/h]	0	0	0	0	0	0	0	0	0	0	0	0
Diverted Trips [veh/h]	0	0	0	0	0	0	0	0	0	0	0	0
Pass-by Trips [veh/h]	0	0	0	0	0	0	0	0	0	0	0	0
Existing Site Adjustment Volume [veh/h]	0	0	0	0	0	0	0	0	0	0	0	0
Other Volume [veh/h]	0	0	0	0	0	0	0	0	0	0	0	0
Total Hourly Volume [veh/h]	128	945	0	11	827	76	164	0	80	2	0	8
Peak Hour Factor	1.0000	1.0000	1.0000	1.0000	1.0000	1.0000	1.0000	1.0000	1.0000	1.0000	1.0000	1.0000
Other Adjustment Factor	1.0000	1.0000	1.0000	1.0000	1.0000	1.0000	1.0000	1.0000	1.0000	1.0000	1.0000	1.0000
Total 15-Minute Volume [veh/h]	32	236	0	3	207	19	41	0	20	1	0	2
Total Analysis Volume [veh/h]	128	945	0	11	827	76	164	0	80	2	0	8
Pedestrian Volume [ped/h]	0			0			0			0		
Bicycle Volume [bicycles/h]	0			0			0			0		

Intersection Settings

Cycle Length [s]	100
Lost time [s]	10.00

Phasing & Timing

Control Type	Permiss	Permiss	Permiss	Permiss	Permiss	Permiss	Permiss	Permiss	Permiss	Permiss	Permiss	Permiss
Signal group	0	2	0	0	6	0	0	8	0	0	4	0
Auxiliary Signal Groups												
Lead / Lag	-	-	-	-	-	-	-	-	-	-	-	-

Movement, Approach, & Intersection Results

V/C, Movement V/C Ratio	0.08	0.30	0.00	0.01	0.26	0.05	0.10	0.00	0.15	0.00	0.00	0.01
Intersection LOS	A											
Intersection V/C	0.592											

Intersection Level Of Service Report
Intersection 32: Azusa Avenue (NS) at Gladstone Street (EW)

Control Type:	Signalized	Delay (sec / veh):	-
Analysis Method:	ICU 1	Level Of Service:	C
Analysis Period:	15 minutes	Volume to Capacity (v/c):	0.732

Intersection Setup

Name	Azusa Avenue			Azusa Avenue			Gladstone Street			Gladstone Street		
Approach	Northbound			Southbound			Eastbound			Westbound		
Lane Configuration												
Turning Movement	Left	Thru	Right	Left	Thru	Right	Left	Thru	Right	Left	Thru	Right
Lane Width [ft]	12.00	12.00	12.00	12.00	12.00	12.00	12.00	12.00	12.00	12.00	12.00	12.00
No. of Lanes in Pocket	1	0	1	2	0	0	1	0	0	1	0	0
Pocket Length [ft]	190.00	100.00	190.00	190.00	100.00	100.00	150.00	100.00	100.00	150.00	100.00	100.00
Speed [mph]	35.00			35.00			40.00			40.00		
Grade [%]	0.00			0.00			0.00			0.00		
Crosswalk	Yes			Yes			Yes			Yes		

Volumes

Name	Azusa Avenue			Azusa Avenue			Gladstone Street			Gladstone Street		
Base Volume Input [veh/h]	113	668	64	119	631	82	117	243	41	139	738	93
Base Volume Adjustment Factor	1.0000	1.0000	1.0000	1.0000	1.0000	1.0000	1.0000	1.0000	1.0000	1.0000	1.0000	1.0000
Heavy Vehicles Percentage [%]	2.00	2.00	2.00	2.00	2.00	2.00	2.00	2.00	2.00	2.00	2.00	2.00
Growth Rate	1.01	1.01	1.01	1.01	1.01	1.01	1.01	1.01	1.01	1.01	1.01	1.01
In-Process Volume [veh/h]	0	0	0	0	0	0	0	0	0	0	0	0
Site-Generated Trips [veh/h]	0	0	0	0	0	0	0	0	0	0	0	0
Diverted Trips [veh/h]	0	0	0	0	0	0	0	0	0	0	0	0
Pass-by Trips [veh/h]	0	0	0	0	0	0	0	0	0	0	0	0
Existing Site Adjustment Volume [veh/h]	0	0	0	0	0	0	0	0	0	0	0	0
Other Volume [veh/h]	0	0	0	0	0	0	0	0	0	0	0	0
Total Hourly Volume [veh/h]	114	675	65	120	637	83	118	245	41	140	745	94
Peak Hour Factor	1.0000	1.0000	1.0000	1.0000	1.0000	1.0000	1.0000	1.0000	1.0000	1.0000	1.0000	1.0000
Other Adjustment Factor	1.0000	1.0000	1.0000	1.0000	1.0000	1.0000	1.0000	1.0000	1.0000	1.0000	1.0000	1.0000
Total 15-Minute Volume [veh/h]	29	169	16	30	159	21	30	61	10	35	186	24
Total Analysis Volume [veh/h]	114	675	65	120	637	83	118	245	41	140	745	94
Pedestrian Volume [ped/h]	0			0			0			0		
Bicycle Volume [bicycles/h]	0			0			0			0		

Intersection Settings

Cycle Length [s]	100
Lost time [s]	10.00

Phasing & Timing

Control Type	Protecte	Permiss	Overlap	Protecte	Permiss	Permiss	Protecte	Permiss	Permiss	Protecte	Permiss	Permiss
Signal group	5	2	2	1	6	0	3	8	0	7	4	0
Auxiliary Signal Groups			2,7									
Lead / Lag	Lead	-	-	Lead	-	-	Lead	-	-	Lead	-	-

Movement, Approach, & Intersection Results

V/C, Movement V/C Ratio	0.07	0.21	0.00	0.04	0.23	0.23	0.07	0.09	0.09	0.09	0.26	0.26
Intersection LOS	C											
Intersection V/C	0.732											

Intersection Level Of Service Report
Intersection 33: San Gabriel Ave/Azusa Ave (NS) at 1st St (EW)

Control Type:	Signalized	Delay (sec / veh):	-
Analysis Method:	ICU 1	Level Of Service:	B
Analysis Period:	15 minutes	Volume to Capacity (v/c):	0.645

Intersection Setup

Name												
Approach	Northbound			Southbound			Eastbound			Westbound		
Lane Configuration												
Turning Movement	Left	Thru	Right	Left	Thru	Right	Left	Thru	Right	Left	Thru	Right
Lane Width [ft]	12.00	12.00	12.00	12.00	12.00	12.00	12.00	12.00	12.00	12.00	12.00	12.00
No. of Lanes in Pocket	0	0	0	0	0	0	0	0	0	0	0	0
Pocket Length [ft]	100.00	100.00	100.00	100.00	100.00	100.00	100.00	100.00	100.00	100.00	100.00	100.00
Speed [mph]	35.00			35.00			35.00			35.00		
Grade [%]	0.00			0.00			0.00			0.00		
Crosswalk	No			Yes			Yes			Yes		

Volumes

Name												
Base Volume Input [veh/h]	86	516	410	72	826	31	38	82	76	369	252	161
Base Volume Adjustment Factor	1.0000	1.0000	1.0000	1.0000	1.0000	1.0000	1.0000	1.0000	1.0000	1.0000	1.0000	1.0000
Heavy Vehicles Percentage [%]	2.00	2.00	2.00	2.00	2.00	2.00	2.00	2.00	2.00	2.00	2.00	2.00
Growth Rate	1.06	1.06	1.06	1.06	1.06	1.06	1.06	1.06	1.06	1.06	1.06	1.06
In-Process Volume [veh/h]	0	0	0	0	0	0	0	0	0	0	0	0
Site-Generated Trips [veh/h]	0	0	0	0	0	0	0	0	0	0	0	0
Diverted Trips [veh/h]	0	0	0	0	0	0	0	0	0	0	0	0
Pass-by Trips [veh/h]	0	0	0	0	0	0	0	0	0	0	0	0
Existing Site Adjustment Volume [veh/h]	0	0	0	0	0	0	0	0	0	0	0	0
Other Volume [veh/h]	0	0	0	0	0	0	0	0	0	0	0	0
Total Hourly Volume [veh/h]	91	547	435	76	876	33	40	87	81	391	267	171
Peak Hour Factor	0.9080	0.9080	0.9080	0.9080	0.9080	0.9080	0.9080	0.9080	0.9080	0.9080	0.9080	0.9080
Other Adjustment Factor	1.0000	1.0000	1.0000	1.0000	1.0000	1.0000	1.0000	1.0000	1.0000	1.0000	1.0000	1.0000
Total 15-Minute Volume [veh/h]	25	151	120	21	241	9	11	24	22	108	74	47
Total Analysis Volume [veh/h]	100	602	479	84	965	36	44	96	89	431	294	188
Pedestrian Volume [ped/h]	0			0			0			0		
Bicycle Volume [bicycles/h]	0			0			0			0		

Intersection Settings

Cycle Length [s]	100
Lost time [s]	10.00

Phasing & Timing

Control Type	Protecte	Permiss	Permiss	Protecte	Permiss	Permiss	Protecte	Permiss	Permiss	Protecte	Permiss	Permiss
Signal group	5	2	0	1	6	0	3	8	0	7	4	0
Auxiliary Signal Groups												
Lead / Lag	Lead	-	-	Lead	-	-	Lead	-	-	Lead	-	-

Movement, Approach, & Intersection Results

V/C, Movement V/C Ratio	0.06	0.19	0.30	0.05	0.30	0.02	0.03	0.06	0.06	0.13	0.15	0.15
Intersection LOS	B											
Intersection V/C	0.645											

Intersection Level Of Service Report
Intersection 34: Alameda Ave/I-210 WB Ramps NS) at 1st St (EW)

Control Type:	Signalized	Delay (sec / veh):	-
Analysis Method:	ICU 1	Level Of Service:	E
Analysis Period:	15 minutes	Volume to Capacity (v/c):	0.913

Intersection Setup

Name												
Approach	Northbound			Southbound			Eastbound			Westbound		
Lane Configuration												
Turning Movement	Left	Thru	Right	Left	Thru	Right	Left	Thru	Right	Left	Thru	Right
Lane Width [ft]	12.00	12.00	12.00	12.00	12.00	12.00	12.00	12.00	12.00	12.00	12.00	12.00
No. of Lanes in Pocket	1	0	0	1	0	1	1	0	1	1	0	1
Pocket Length [ft]	325.00	100.00	100.00	50.00	100.00	150.00	55.00	100.00	100.00	100.00	100.00	110.00
Speed [mph]	35.00			35.00			35.00			35.00		
Grade [%]	0.00			0.00			0.00			0.00		
Crosswalk	Yes			Yes			Yes			Yes		

Volumes

Name												
Base Volume Input [veh/h]	111	14	7	41	112	64	8	239	388	580	465	44
Base Volume Adjustment Factor	1.0000	1.0000	1.0000	1.0000	1.0000	1.0000	1.0000	1.0000	1.0000	1.0000	1.0000	1.0000
Heavy Vehicles Percentage [%]	2.00	2.00	2.00	2.00	2.00	2.00	2.00	2.00	2.00	2.00	2.00	2.00
Growth Rate	1.02	1.02	1.02	1.02	1.02	1.02	1.02	1.02	1.02	1.02	1.02	1.02
In-Process Volume [veh/h]	0	0	0	0	0	0	0	0	0	0	0	0
Site-Generated Trips [veh/h]	0	0	0	0	0	0	0	0	0	0	0	0
Diverted Trips [veh/h]	0	0	0	0	0	0	0	0	0	0	0	0
Pass-by Trips [veh/h]	0	0	0	0	0	0	0	0	0	0	0	0
Existing Site Adjustment Volume [veh/h]	0	0	0	0	0	0	0	0	0	0	0	0
Other Volume [veh/h]	0	0	0	0	0	0	0	0	0	0	0	0
Total Hourly Volume [veh/h]	113	14	7	42	114	65	8	244	396	592	474	45
Peak Hour Factor	0.9350	0.9350	0.9350	0.9350	0.9350	0.9350	0.9350	0.9350	0.9350	0.9350	0.9350	0.9350
Other Adjustment Factor	1.0000	1.0000	1.0000	1.0000	1.0000	1.0000	1.0000	1.0000	1.0000	1.0000	1.0000	1.0000
Total 15-Minute Volume [veh/h]	30	4	2	11	30	17	2	65	106	158	127	12
Total Analysis Volume [veh/h]	121	15	7	45	122	70	9	261	424	633	507	48
Pedestrian Volume [ped/h]	0			0			0			0		
Bicycle Volume [bicycles/h]	0			0			0			0		

Intersection Settings

Cycle Length [s]	100
Lost time [s]	10.00

Phasing & Timing

Control Type	Permiss	Permiss	Permiss	Permiss	Permiss	Permiss	Permiss	Permiss	Permiss	Permiss	Permiss	Permiss
Signal group	0	2	0	0	6	0	0	8	0	0	4	0
Auxiliary Signal Groups												
Lead / Lag	-	-	-	-	-	-	-	-	-	-	-	-

Movement, Approach, & Intersection Results

V/C, Movement V/C Ratio	0.08	0.01	0.01	0.03	0.08	0.04	0.01	0.08	0.27	0.40	0.32	0.03
Intersection LOS	E											
Intersection V/C	0.913											

Vincent Avenue Industrial Building

Vistro File: G:\...\PMC.vistro
Report File: G:\...\FB PM.pdf

Scenario 1 Future Baseline Without Project
5/6/2020

Intersection Analysis Summary

ID	Intersection Name	Control Type	Method	Worst Mvmt	V/C	Delay (s/veh)	LOS
1	I-605 SB On Ramp (NS) at Live Oak Avenue (EW)	Signalized	ICU 1	WB Left	0.783	-	C
2	I-605 NB Ramps (NS) at Live Oak Avenue (EW)	Two-way stop	HCM 6th Edition	NB Right	1.235	147.0	F
3	Graham Road (NS) at Live Oak Avenue (EW)	Signalized	ICU 1	WB Thru	0.569	-	A
4	Rivergrade Road (NS) at Live Oak Avenue (EW)	Signalized	ICU 1	EB Thru	0.885	-	D
5	Stewart Avenue (NS) at Live Oak Avenue (EW)	Signalized	ICU 1	EB Thru	0.765	-	C
6	Baldwin Park Boulevard (NS) at Live Oak Avenue (EW)	Signalized	ICU 1	EB Thru	0.701	-	C
7	Arrow Highway (NS) at Live Oak Ave/Arrow Hwy (EW)	Signalized	ICU 1	EB Thru	0.896	-	D
8	Maine Avenue (NS) at Arrow Highway (EW)	Signalized	ICU 1	EB Thru	0.814	-	D
9	Santa Fe Dam/Azusa Canyon Road (NS) at Arrow Highway (EW)	Signalized	ICU 1	EB Thru	0.904	-	E
10	4th Street (NS) at Arrow Highway (EW)	Signalized	ICU 1	EB Thru	0.555	-	A
11	Irwindale Avenue (NS) at I-210 WB Ramps (EW)	Signalized	ICU 1	SB Thru	0.540	-	A
12	Irwindale Avenue (NS) at I-210 EB Ramps (EW)	Signalized	ICU 1	NB Thru	0.747	-	C
13	Irwindale Avenue (NS) at Jardin De Roca/Irwindale Rd (EW)	Signalized	ICU 1	SB Thru	0.697	-	B
14	Irwindale Avenue (NS) at 1st Street (EW)	Signalized	ICU 1	SB Thru	0.447	-	A
15	Irwindale Avenue (NS) at Gladstone Street (EW)	Signalized	ICU 1	SB Thru	0.651	-	B
16	Irwindale Avenue (NS) at Arrow Highway (EW)	Signalized	ICU 1	EB Thru	0.761	-	C
17	Vincent Avenue (NS) at	Signalized	ICU 1	EB Thru	0.843		D

17	Gladstone Street (EW)	Signalized	ICU 1	EB Thru	0.845	-	D
18	Vincent Avenue (NS) at Arrow Highway (EW)	Signalized	ICU 1	EB Thru	0.782	-	C
21	Vincent Avenue (NS) at Cypress Street (EW)	Signalized	ICU 1	EB Thru	0.726	-	C
22	Vincent Avenue (NS) at San Bernardino Road (EW)	Signalized	ICU 1	EB Right	0.658	-	B
23	Vincent Avenue (NS) at Badillo Street (EW)	Signalized	ICU 1	EB Thru	0.763	-	C
24	Vincent Avenue (NS) at Puente Avenue (EW)	Signalized	ICU 1	SB Thru	0.633	-	B
25	Vincent Avenue (NS) at Rowland Avenue (EW)	Signalized	ICU 1	SB Thru	0.609	-	B
26	Vincent Avenue (NS) at Workman Avenue (EW)	Signalized	ICU 1	NB Thru	0.691	-	B
27	Vincent Avenue (NS) at I-10 WB Ramps (EW)	Signalized	ICU 1	SB Thru	0.450	-	A
28	Vincent Avenue (NS) at I-10 EB Ramps (EW)	Signalized	ICU 1	NB Thru	0.541	-	A
29	Vernon Ave/Lark Ellen Ave (NS) at Gladstone Street (EW)	Signalized	ICU 1	EB Thru	0.732	-	C
30	Azusa Avenue (NS) at I-210 EB Ramps (EW)	Signalized	ICU 1	NB Thru	0.659	-	B
31	Azusa Avenue (NS) at Paramount Street (EW)	Signalized	ICU 1	SB Thru	0.636	-	B
32	Azusa Avenue (NS) at Gladstone Street (EW)	Signalized	ICU 1	EB Thru	0.737	-	C
33	San Gabriel Ave/Azusa Ave (NS) at 1st St (EW)	Signalized	ICU 1	SB Thru	0.669	-	B
34	Alameda Ave/I-210 WB Ramps (NS) at 1st St (EW)	Signalized	ICU 1	NB Left	0.699	-	B

V/C, Delay, LOS: For two-way stop, these values are taken from the movement with the worst (highest) delay value. For all other control types, they are taken for the whole intersection.

Intersection Level Of Service Report
Intersection 1: I-605 SB On Ramp (NS) at Live Oak Avenue (EW)

Control Type:	Signalized	Delay (sec / veh):	-
Analysis Method:	ICU 1	Level Of Service:	C
Analysis Period:	15 minutes	Volume to Capacity (v/c):	0.783

Intersection Setup

Name	I-605 SB On Ramps				Live Oak Avenue	
Approach	Northbound		Eastbound		Westbound	
Lane Configuration						
Turning Movement	Left	Right	Thru	Right	Left	Thru
Lane Width [ft]	12.00	12.00	12.00	12.00	12.00	12.00
No. of Lanes in Pocket	0	0	0	0	1	0
Pocket Length [ft]	100.00	100.00	100.00	100.00	365.00	100.00
Speed [mph]	35.00		35.00		45.00	
Grade [%]	0.00		0.00		0.00	
Crosswalk	Yes		No		No	

Volumes

Name	I-605 SB On Ramps				Live Oak Avenue	
Base Volume Input [veh/h]	0	0	1049	1114	557	884
Base Volume Adjustment Factor	1.0000	1.0000	1.0000	0.0000	1.0000	1.0000
Heavy Vehicles Percentage [%]	2.00	2.00	2.00	2.00	2.00	2.00
Growth Rate	1.00	1.00	1.01	1.01	1.01	1.01
In-Process Volume [veh/h]	0	0	0	0	0	0
Site-Generated Trips [veh/h]	0	0	0	0	0	0
Diverted Trips [veh/h]	0	0	0	0	0	0
Pass-by Trips [veh/h]	0	0	0	0	0	0
Existing Site Adjustment Volume [veh/h]	0	0	0	0	0	0
Other Volume [veh/h]	0	0	0	0	0	0
Total Hourly Volume [veh/h]	0	0	1059	0	563	893
Peak Hour Factor	1.0000	1.0000	1.0000	1.0000	1.0000	1.0000
Other Adjustment Factor	1.0000	1.0000	1.0000	0.0000	1.0000	1.0000
Total 15-Minute Volume [veh/h]	0	0	265	0	141	223
Total Analysis Volume [veh/h]	0	0	1059	0	563	893
Pedestrian Volume [ped/h]	0		0		0	
Bicycle Volume [bicycles/h]	0		0		0	

Intersection Settings

Cycle Length [s]	100
Lost time [s]	10.00

Phasing & Timing

Control Type	Permissive	Permissive	Permissive	Permissive	Protected	Permissive
Signal group	0	0	2	0	1	6
Auxiliary Signal Groups						
Lead / Lag	-	-	-	-	Lead	-

Movement, Approach, & Intersection Results

V/C, Movement V/C Ratio	0.00	0.00	0.33	0.00	0.35	0.28
Intersection LOS	C					
Intersection V/C	0.783					

Intersection Level Of Service Report
Intersection 2: I-605 NB Ramps (NS) at Live Oak Avenue (EW)

Control Type:	Two-way stop	Delay (sec / veh):	147.0
Analysis Method:	HCM 6th Edition	Level Of Service:	F
Analysis Period:	15 minutes	Volume to Capacity (v/c):	1.235

Intersection Setup

Name	I-605 NB Ramps			I-605 NB Ramps			Live Oak Avenue			Live Oak Avenue		
Approach	Northbound			Southbound			Eastbound			Westbound		
Lane Configuration												
Turning Movement	Left	Thru	Right	Left	Thru	Right	Left	Thru	Right	Left	Thru	Right
Lane Width [ft]	12.00	12.00	12.00	12.00	12.00	12.00	12.00	12.00	12.00	12.00	12.00	12.00
No. of Lanes in Pocket	0	0	0	0	0	0	0	0	0	0	0	0
Pocket Length [ft]	100.00	100.00	100.00	100.00	100.00	100.00	100.00	100.00	100.00	100.00	100.00	100.00
Speed [mph]	35.00			35.00			45.00			45.00		
Grade [%]	0.00			0.00			0.00			0.00		
Crosswalk	Yes			Yes			No			No		

Volumes

Name	I-605 NB Ramps			I-605 NB Ramps			Live Oak Avenue			Live Oak Avenue		
Base Volume Input [veh/h]	0	0	621	0	0	523	0	1012	0	0	944	0
Base Volume Adjustment Factor	1.0000	1.0000	1.0000	1.0000	1.0000	1.0000	1.0000	1.0000	1.0000	1.0000	1.0000	1.0000
Heavy Vehicles Percentage [%]	2.00	2.00	2.00	2.00	2.00	2.00	2.00	2.00	2.00	2.00	2.00	2.00
Growth Rate	1.00	1.00	1.01	1.00	1.00	1.01	1.00	1.01	1.00	1.00	1.01	1.00
In-Process Volume [veh/h]	0	0	0	0	0	0	0	0	0	0	0	0
Site-Generated Trips [veh/h]	0	0	0	0	0	0	0	0	0	0	0	0
Diverted Trips [veh/h]	0	0	0	0	0	0	0	0	0	0	0	0
Pass-by Trips [veh/h]	0	0	0	0	0	0	0	0	0	0	0	0
Existing Site Adjustment Volume [veh/h]	0	0	0	0	0	0	0	0	0	0	0	0
Other Volume [veh/h]	0	0	0	0	0	0	0	0	0	0	0	0
Total Hourly Volume [veh/h]	0	0	627	0	0	528	0	1022	0	0	953	0
Peak Hour Factor	1.0000	1.0000	1.0000	1.0000	1.0000	1.0000	1.0000	1.0000	1.0000	1.0000	1.0000	1.0000
Other Adjustment Factor	1.0000	1.0000	1.0000	1.0000	1.0000	1.0000	1.0000	1.0000	1.0000	1.0000	1.0000	1.0000
Total 15-Minute Volume [veh/h]	0	0	157	0	0	132	0	256	0	0	238	0
Total Analysis Volume [veh/h]	0	0	627	0	0	528	0	1022	0	0	953	0
Pedestrian Volume [ped/h]	0			0			0			0		

Intersection Settings

Priority Scheme	Stop	Stop	Free	Free
Flared Lane				
Storage Area [veh]	0	0	0	0
Two-Stage Gap Acceptance	No	No		
Number of Storage Spaces in Median	0	0	0	0

Movement, Approach, & Intersection Results

V/C, Movement V/C Ratio	0.00	0.00	1.23	0.00	0.00	0.99	0.00	0.01	0.00	0.00	0.01	0.00
d_M, Delay for Movement [s/veh]	0.00	0.00	146.97	0.00	0.00	63.65	0.00	0.00	0.00	0.00	0.00	0.00
Movement LOS			F			F		A			A	
95th-Percentile Queue Length [veh/ln]	0.00	0.00	24.50	0.00	0.00	13.65	0.00	0.00	0.00	0.00	0.00	0.00
95th-Percentile Queue Length [ft/ln]	0.00	0.00	612.52	0.00	0.00	341.37	0.00	0.00	0.00	0.00	0.00	0.00
d_A, Approach Delay [s/veh]	146.97			63.65			0.00			0.00		
Approach LOS	F			F			A			A		
d_I, Intersection Delay [s/veh]	40.18											
Intersection LOS	F											

Intersection Level Of Service Report
Intersection 3: Graham Road (NS) at Live Oak Avenue (EW)

Control Type:	Signalized	Delay (sec / veh):	-
Analysis Method:	ICU 1	Level Of Service:	A
Analysis Period:	15 minutes	Volume to Capacity (v/c):	0.569

Intersection Setup

Name	Graham Road		Live Oak Avenue		Live Oak Avenue	
Approach	Northbound		Eastbound		Westbound	
Lane Configuration						
Turning Movement	Left	Right	Thru	Right	Left	Thru
Lane Width [ft]	12.00	12.00	12.00	12.00	12.00	12.00
No. of Lanes in Pocket	0	0	0	0	1	0
Pocket Length [ft]	100.00	100.00	100.00	100.00	205.00	100.00
Speed [mph]	35.00		45.00		45.00	
Grade [%]	0.00		0.00		0.00	
Crosswalk	Yes		No		Yes	

Volumes

Name	Graham Road		Live Oak Avenue		Live Oak Avenue	
Base Volume Input [veh/h]	38	39	578	28	14	1334
Base Volume Adjustment Factor	1.0000	1.0000	1.0000	1.0000	1.0000	1.0000
Heavy Vehicles Percentage [%]	2.00	2.00	2.00	2.00	2.00	2.00
Growth Rate	1.01	1.01	1.01	1.01	1.01	1.01
In-Process Volume [veh/h]	0	0	0	0	0	0
Site-Generated Trips [veh/h]	0	0	0	0	0	0
Diverted Trips [veh/h]	0	0	0	0	0	0
Pass-by Trips [veh/h]	0	0	0	0	0	0
Existing Site Adjustment Volume [veh/h]	0	0	0	0	0	0
Other Volume [veh/h]	0	0	0	0	0	0
Total Hourly Volume [veh/h]	38	39	584	28	14	1347
Peak Hour Factor	1.0000	1.0000	1.0000	1.0000	1.0000	1.0000
Other Adjustment Factor	1.0000	1.0000	1.0000	1.0000	1.0000	1.0000
Total 15-Minute Volume [veh/h]	10	10	146	7	4	337
Total Analysis Volume [veh/h]	38	39	584	28	14	1347
Pedestrian Volume [ped/h]	0		0		0	
Bicycle Volume [bicycles/h]	0		0		0	

Intersection Settings

Cycle Length [s]	100
Lost time [s]	10.00

Phasing & Timing

Control Type	Permissive	Permissive	Permissive	Permissive	Protected	Permissive
Signal group	5	0	8	0	7	4
Auxiliary Signal Groups						
Lead / Lag	Lead	-	-	-	Lead	-

Movement, Approach, & Intersection Results

V/C, Movement V/C Ratio	0.02	0.05	0.18	0.02	0.01	0.42
Intersection LOS	A					
Intersection V/C	0.569					

Intersection Level Of Service Report
Intersection 4: Rivergrade Road (NS) at Live Oak Avenue (EW)

Control Type:	Signalized	Delay (sec / veh):	-
Analysis Method:	ICU 1	Level Of Service:	D
Analysis Period:	15 minutes	Volume to Capacity (v/c):	0.885

Intersection Setup

Name	Rivergrade Raod			Rivergrade Road			Live Oak Avenue			Live Oak Avenue		
Approach	Northbound			Southbound			Eastbound			Westbound		
Lane Configuration												
Turning Movement	Left	Thru	Right	Left	Thru	Right	Left	Thru	Right	Left	Thru	Right
Lane Width [ft]	12.00	12.00	12.00	12.00	12.00	12.00	12.00	12.00	12.00	12.00	12.00	12.00
No. of Lanes in Pocket	1	0	0	1	0	1	1	0	0	1	0	1
Pocket Length [ft]	315.00	100.00	100.00	160.00	100.00	145.00	205.00	100.00	100.00	155.00	100.00	120.00
Speed [mph]	50.00			40.00			45.00			45.00		
Grade [%]	0.00			0.00			0.00			0.00		
Crosswalk	Yes			Yes			Yes			Yes		

Volumes

Name	Rivergrade Raod			Rivergrade Road			Live Oak Avenue			Live Oak Avenue		
Base Volume Input [veh/h]	162	193	481	25	41	54	37	1475	21	117	685	12
Base Volume Adjustment Factor	1.0000	1.0000	1.0000	1.0000	1.0000	1.0000	1.0000	1.0000	1.0000	1.0000	1.0000	1.0000
Heavy Vehicles Percentage [%]	2.00	2.00	2.00	2.00	2.00	2.00	2.00	2.00	2.00	2.00	2.00	2.00
Growth Rate	1.01	1.01	1.01	1.01	1.01	1.01	1.01	1.01	1.01	1.01	1.01	1.01
In-Process Volume [veh/h]	0	0	0	0	0	0	0	0	0	0	0	0
Site-Generated Trips [veh/h]	0	0	0	0	0	0	0	0	0	0	0	0
Diverted Trips [veh/h]	0	0	0	0	0	0	0	0	0	0	0	0
Pass-by Trips [veh/h]	0	0	0	0	0	0	0	0	0	0	0	0
Existing Site Adjustment Volume [veh/h]	0	0	0	0	0	0	0	0	0	0	0	0
Other Volume [veh/h]	0	0	0	0	0	0	0	0	0	0	0	0
Total Hourly Volume [veh/h]	164	195	486	25	41	55	37	1490	21	118	692	12
Peak Hour Factor	1.0000	1.0000	1.0000	1.0000	1.0000	1.0000	1.0000	1.0000	1.0000	1.0000	1.0000	1.0000
Other Adjustment Factor	1.0000	1.0000	1.0000	1.0000	1.0000	1.0000	1.0000	1.0000	1.0000	1.0000	1.0000	1.0000
Total 15-Minute Volume [veh/h]	41	49	122	6	10	14	9	373	5	30	173	3
Total Analysis Volume [veh/h]	164	195	486	25	41	55	37	1490	21	118	692	12
Pedestrian Volume [ped/h]	0			0			0			0		
Bicycle Volume [bicycles/h]	0			0			0			0		

Intersection Settings

Cycle Length [s]	100
Lost time [s]	10.00

Phasing & Timing

Control Type	Protecte	Permiss	Overlap	Protecte	Permiss	Permiss	Protecte	Permiss	Permiss	Protecte	Permiss	Permiss
Signal group	5	2	2	1	6	0	3	8	0	7	4	0
Auxiliary Signal Groups			2,7									
Lead / Lag	Lead	-	-	Lead	-	-	Lead	-	-	Lead	-	-

Movement, Approach, & Intersection Results

V/C, Movement V/C Ratio	0.10	0.12	0.23	0.02	0.01	0.03	0.02	0.47	0.01	0.07	0.22	0.01
Intersection LOS	D											
Intersection V/C	0.885											

Intersection Level Of Service Report
Intersection 5: Stewart Avenue (NS) at Live Oak Avenue (EW)

Control Type:	Signalized	Delay (sec / veh):	-
Analysis Method:	ICU 1	Level Of Service:	C
Analysis Period:	15 minutes	Volume to Capacity (v/c):	0.765

Intersection Setup

Name	Stewart Avenue			Stewart Avenue			Live Oak Avenue			Live Oak Avenue		
Approach	Northbound			Southbound			Eastbound			Westbound		
Lane Configuration												
Turning Movement	Left	Thru	Right	Left	Thru	Right	Left	Thru	Right	Left	Thru	Right
Lane Width [ft]	12.00	12.00	12.00	12.00	12.00	12.00	12.00	12.00	12.00	12.00	12.00	12.00
No. of Lanes in Pocket	0	0	0	1	0	0	1	0	0	1	0	0
Pocket Length [ft]	100.00	100.00	100.00	100.00	100.00	100.00	165.00	100.00	100.00	100.00	100.00	100.00
Speed [mph]	30.00			30.00			45.00			45.00		
Grade [%]	0.00			0.00			0.00			0.00		
Crosswalk	Yes			Yes			No			Yes		

Volumes

Name	Stewart Avenue			Stewart Avenue			Live Oak Avenue			Live Oak Avenue		
Base Volume Input [veh/h]	53	27	7	32	109	7	38	1720	302	31	692	9
Base Volume Adjustment Factor	1.0000	1.0000	1.0000	1.0000	1.0000	1.0000	1.0000	1.0000	1.0000	1.0000	1.0000	1.0000
Heavy Vehicles Percentage [%]	2.00	2.00	2.00	2.00	2.00	2.00	2.00	2.00	2.00	2.00	2.00	2.00
Growth Rate	1.01	1.01	1.01	1.01	1.01	1.01	1.01	1.01	1.01	1.01	1.01	1.01
In-Process Volume [veh/h]	0	0	0	0	0	0	0	0	0	0	0	0
Site-Generated Trips [veh/h]	0	0	0	0	0	0	0	0	0	0	0	0
Diverted Trips [veh/h]	0	0	0	0	0	0	0	0	0	0	0	0
Pass-by Trips [veh/h]	0	0	0	0	0	0	0	0	0	0	0	0
Existing Site Adjustment Volume [veh/h]	0	0	0	0	0	0	0	0	0	0	0	0
Other Volume [veh/h]	0	0	0	0	0	0	0	0	0	0	0	0
Total Hourly Volume [veh/h]	54	27	7	32	110	7	38	1737	305	31	699	9
Peak Hour Factor	1.0000	1.0000	1.0000	1.0000	1.0000	1.0000	1.0000	1.0000	1.0000	1.0000	1.0000	1.0000
Other Adjustment Factor	1.0000	1.0000	1.0000	1.0000	1.0000	1.0000	1.0000	1.0000	1.0000	1.0000	1.0000	1.0000
Total 15-Minute Volume [veh/h]	14	7	2	8	28	2	10	434	76	8	175	2
Total Analysis Volume [veh/h]	54	27	7	32	110	7	38	1737	305	31	699	9
Pedestrian Volume [ped/h]	0			0			0			0		
Bicycle Volume [bicycles/h]	0			0			0			0		

Intersection Settings

Cycle Length [s]	100
Lost time [s]	10.00

Phasing & Timing

Control Type	Permiss	Permiss	Permiss	Permiss	Permiss	Permiss	Permiss	Permiss	Permiss	Permiss	Permiss	Permiss
Signal group	0	2	0	0	6	0	0	8	0	0	4	0
Auxiliary Signal Groups												
Lead / Lag	-	-	-	-	-	-	-	-	-	-	-	-

Movement, Approach, & Intersection Results

V/C, Movement V/C Ratio	0.03	0.06	0.06	0.02	0.07	0.00	0.02	0.54	0.19	0.02	0.22	0.01
Intersection LOS	C											
Intersection V/C	0.765											

Intersection Level Of Service Report
Intersection 6: Baldwin Park Boulevard (NS) at Live Oak Avenue (EW)

Control Type:	Signalized	Delay (sec / veh):	-
Analysis Method:	ICU 1	Level Of Service:	C
Analysis Period:	15 minutes	Volume to Capacity (v/c):	0.701

Intersection Setup

Name	Baldwin Park Boulevard						Live Oak Avenue			Live Oak Avenue		
Approach	Northbound			Southbound			Eastbound			Westbound		
Lane Configuration												
Turning Movement	Left	Thru	Right	Left	Thru	Right	Left	Thru	Right	Left	Thru	Right
Lane Width [ft]	12.00	12.00	12.00	12.00	12.00	12.00	12.00	12.00	12.00	12.00	12.00	12.00
No. of Lanes in Pocket	1	0	0	0	0	0	0	0	0	1	0	0
Pocket Length [ft]	100.00	100.00	100.00	100.00	100.00	100.00	100.00	100.00	100.00	200.00	100.00	100.00
Speed [mph]	40.00			35.00			45.00			45.00		
Grade [%]	0.00			0.00			0.00			0.00		
Crosswalk	Yes			Yes			No			No		

Volumes

Name	Baldwin Park Boulevard						Live Oak Avenue			Live Oak Avenue		
Base Volume Input [veh/h]	77	0	94	0	0	0	0	1259	623	280	623	0
Base Volume Adjustment Factor	1.0000	1.0000	1.0000	1.0000	1.0000	1.0000	1.0000	1.0000	1.0000	1.0000	1.0000	1.0000
Heavy Vehicles Percentage [%]	2.00	2.00	2.00	2.00	2.00	2.00	2.00	2.00	2.00	2.00	2.00	2.00
Growth Rate	1.01	1.01	1.01	1.01	1.01	1.01	1.01	1.01	1.01	1.01	1.01	1.01
In-Process Volume [veh/h]	0	0	0	0	0	0	0	0	0	0	0	0
Site-Generated Trips [veh/h]	0	0	0	0	0	0	0	0	0	0	0	0
Diverted Trips [veh/h]	0	0	0	0	0	0	0	0	0	0	0	0
Pass-by Trips [veh/h]	0	0	0	0	0	0	0	0	0	0	0	0
Existing Site Adjustment Volume [veh/h]	0	0	0	0	0	0	0	0	0	0	0	0
Other Volume [veh/h]	0	0	0	0	0	0	0	0	0	0	0	0
Total Hourly Volume [veh/h]	78	0	95	0	0	0	0	1272	629	283	629	0
Peak Hour Factor	1.0000	1.0000	1.0000	1.0000	1.0000	1.0000	1.0000	1.0000	1.0000	1.0000	1.0000	1.0000
Other Adjustment Factor	1.0000	1.0000	1.0000	1.0000	1.0000	1.0000	1.0000	1.0000	1.0000	1.0000	1.0000	1.0000
Total 15-Minute Volume [veh/h]	20	0	24	0	0	0	0	318	157	71	157	0
Total Analysis Volume [veh/h]	78	0	95	0	0	0	0	1272	629	283	629	0
Pedestrian Volume [ped/h]	0			0			0			0		
Bicycle Volume [bicycles/h]	0			0			0			0		

Intersection Settings

Cycle Length [s]	100
Lost time [s]	10.00

Phasing & Timing

Control Type	Permiss	Permiss	Permiss	Permiss	Permiss	Permiss	Permiss	Permiss	Permiss	Protecte	Permiss	Permiss
Signal group	5	0	0	0	0	0	0	8	0	7	4	0
Auxiliary Signal Groups												
Lead / Lag	Lead	-	-	-	-	-	-	-	-	Lead	-	-

Movement, Approach, & Intersection Results

V/C, Movement V/C Ratio	0.02	0.00	0.00	0.00	0.00	0.00	0.00	0.40	0.39	0.18	0.20	0.00
Intersection LOS	C											
Intersection V/C	0.701											

Intersection Level Of Service Report
Intersection 7: Arrow Highway (NS) at Live Oak Ave/Arrow Hwy (EW)

Control Type:	Signalized	Delay (sec / veh):	-
Analysis Method:	ICU 1	Level Of Service:	D
Analysis Period:	15 minutes	Volume to Capacity (v/c):	0.896

Intersection Setup

Name			Live Oak Avenue		Arrow Highway	
Approach	Southbound		Eastbound		Westbound	
Lane Configuration						
Turning Movement	Left	Right	Left	Thru	Thru	Right
Lane Width [ft]	12.00	12.00	12.00	12.00	12.00	12.00
No. of Lanes in Pocket	0	0	1	0	0	0
Pocket Length [ft]	100.00	100.00	160.00	100.00	100.00	100.00
Speed [mph]	35.00		45.00		45.00	
Grade [%]	0.00		0.00		0.00	
Crosswalk	No		Yes		No	

Volumes

Name			Live Oak Avenue		Arrow Highway	
Base Volume Input [veh/h]	1077	131	41	1326	1117	451
Base Volume Adjustment Factor	1.0000	1.0000	1.0000	1.0000	1.0000	1.0000
Heavy Vehicles Percentage [%]	2.00	2.00	2.00	2.00	2.00	2.00
Growth Rate	1.01	1.01	1.01	1.01	1.01	1.00
In-Process Volume [veh/h]	0	0	0	0	0	0
Site-Generated Trips [veh/h]	0	0	0	0	0	0
Diverted Trips [veh/h]	0	0	0	0	0	0
Pass-by Trips [veh/h]	0	0	0	0	0	0
Existing Site Adjustment Volume [veh/h]	0	0	0	0	0	0
Other Volume [veh/h]	0	0	0	0	0	0
Total Hourly Volume [veh/h]	1088	132	41	1339	1128	451
Peak Hour Factor	1.0000	1.0000	1.0000	1.0000	1.0000	1.0000
Other Adjustment Factor	1.0000	1.0000	1.0000	1.0000	1.0000	1.0000
Total 15-Minute Volume [veh/h]	272	33	10	335	282	113
Total Analysis Volume [veh/h]	1088	132	41	1339	1128	451
Pedestrian Volume [ped/h]	0		0		0	
Bicycle Volume [bicycles/h]	0		0		0	

Intersection Settings

Cycle Length [s]	100
Lost time [s]	10.00

Phasing & Timing

Control Type	Permissive	Permissive	Permissive	Permissive	Permissive	Unsignalized
Signal group	1	0	0	8	4	0
Auxiliary Signal Groups						
Lead / Lag	Lead	-	-	-	-	-

Movement, Approach, & Intersection Results

V/C, Movement V/C Ratio	0.34	0.08	0.03	0.42	0.35	0.00
Intersection LOS	D					
Intersection V/C	0.896					

Intersection Level Of Service Report
Intersection 8: Maine Avenue (NS) at Arrow Highway (EW)

Control Type:	Signalized	Delay (sec / veh):	-
Analysis Method:	ICU 1	Level Of Service:	D
Analysis Period:	15 minutes	Volume to Capacity (v/c):	0.814

Intersection Setup

Name	Maine Avenue		Arrow Highway		Arrow Highway	
Approach	Northbound		Eastbound		Westbound	
Lane Configuration						
Turning Movement	Left	Right	Thru	Right	Left	Thru
Lane Width [ft]	12.00	12.00	12.00	12.00	12.00	12.00
No. of Lanes in Pocket	0	1	0	0	1	0
Pocket Length [ft]	100.00	50.00	100.00	100.00	80.00	100.00
Speed [mph]	35.00		45.00		45.00	
Grade [%]	0.00		0.00		0.00	
Crosswalk	Yes		No		Yes	

Volumes

Name	Maine Avenue		Arrow Highway		Arrow Highway	
Base Volume Input [veh/h]	247	57	1849	555	70	1046
Base Volume Adjustment Factor	1.0000	1.0000	1.0000	1.0000	1.0000	1.0000
Heavy Vehicles Percentage [%]	2.00	2.00	2.00	2.00	2.00	2.00
Growth Rate	1.01	1.01	1.01	1.01	1.01	1.01
In-Process Volume [veh/h]	0	0	0	0	0	0
Site-Generated Trips [veh/h]	0	0	0	0	0	0
Diverted Trips [veh/h]	0	0	0	0	0	0
Pass-by Trips [veh/h]	0	0	0	0	0	0
Existing Site Adjustment Volume [veh/h]	0	0	0	0	0	0
Other Volume [veh/h]	0	0	0	0	0	0
Total Hourly Volume [veh/h]	249	58	1867	561	71	1056
Peak Hour Factor	1.0000	1.0000	1.0000	1.0000	1.0000	1.0000
Other Adjustment Factor	1.0000	1.0000	1.0000	1.0000	1.0000	1.0000
Total 15-Minute Volume [veh/h]	62	15	467	140	18	264
Total Analysis Volume [veh/h]	249	58	1867	561	71	1056
Pedestrian Volume [ped/h]	0		0		0	
Bicycle Volume [bicycles/h]	0		0		0	

Intersection Settings

Cycle Length [s]	100
Lost time [s]	10.00

Phasing & Timing

Control Type	Split	Split	Permissive	Permissive	Permissive	Permissive
Signal group	5	0	8	0	0	4
Auxiliary Signal Groups						
Lead / Lag	Lead	-	-	-	-	-

Movement, Approach, & Intersection Results

V/C, Movement V/C Ratio	0.08	0.04	0.58	0.35	0.04	0.22
Intersection LOS	D					
Intersection V/C	0.814					

Intersection Level Of Service Report

Intersection 9: Santa Fe Dam/Azusa Canyon Road (NS) at Arrow Highway (EW)

Control Type:	Signalized	Delay (sec / veh):	-
Analysis Method:	ICU 1	Level Of Service:	E
Analysis Period:	15 minutes	Volume to Capacity (v/c):	0.904

Intersection Setup

Name	Azusa Canyon Road						Arrow Highway			Arrow Highway		
Approach	Northbound			Southbound			Eastbound			Westbound		
Lane Configuration												
Turning Movement	Left	Thru	Right	Left	Thru	Right	Left	Thru	Right	Left	Thru	Right
Lane Width [ft]	12.00	12.00	12.00	12.00	12.00	12.00	12.00	12.00	12.00	12.00	12.00	12.00
No. of Lanes in Pocket	1	0	0	0	0	0	1	0	0	1	0	0
Pocket Length [ft]	200.00	100.00	100.00	100.00	100.00	100.00	185.00	100.00	100.00	180.00	100.00	100.00
Speed [mph]	35.00			35.00			45.00			45.00		
Grade [%]	0.00			0.00			0.00			0.00		
Crosswalk	Yes			Yes			No			Yes		

Volumes

Name	Azusa Canyon Road						Arrow Highway			Arrow Highway		
Base Volume Input [veh/h]	120	5	442	15	13	29	14	1265	59	158	967	16
Base Volume Adjustment Factor	1.0000	1.0000	1.0000	1.0000	1.0000	1.0000	1.0000	1.0000	1.0000	1.0000	1.0000	1.0000
Heavy Vehicles Percentage [%]	2.00	2.00	2.00	2.00	2.00	2.00	2.00	2.00	2.00	2.00	2.00	2.00
Growth Rate	1.01	1.00	1.01	1.00	1.00	1.00	1.00	1.01	1.01	1.01	1.01	1.00
In-Process Volume [veh/h]	0	0	0	0	0	0	0	0	0	0	0	0
Site-Generated Trips [veh/h]	0	0	0	0	0	0	0	0	0	0	0	0
Diverted Trips [veh/h]	0	0	0	0	0	0	0	0	0	0	0	0
Pass-by Trips [veh/h]	0	0	0	0	0	0	0	0	0	0	0	0
Existing Site Adjustment Volume [veh/h]	0	0	0	0	0	0	0	0	0	0	0	0
Other Volume [veh/h]	0	0	0	0	0	0	0	0	0	0	0	0
Total Hourly Volume [veh/h]	121	5	446	15	13	29	14	1278	60	160	977	16
Peak Hour Factor	1.0000	1.0000	1.0000	1.0000	1.0000	1.0000	1.0000	1.0000	1.0000	1.0000	1.0000	1.0000
Other Adjustment Factor	1.0000	1.0000	1.0000	1.0000	1.0000	1.0000	1.0000	1.0000	1.0000	1.0000	1.0000	1.0000
Total 15-Minute Volume [veh/h]	30	1	112	4	3	7	4	320	15	40	244	4
Total Analysis Volume [veh/h]	121	5	446	15	13	29	14	1278	60	160	977	16
Pedestrian Volume [ped/h]	0			0			0			0		
Bicycle Volume [bicycles/h]	0			0			0			0		

Intersection Settings

Cycle Length [s]	100
Lost time [s]	10.00

Phasing & Timing

Control Type	Split	Split	Split	Split	Split	Split	Protecte	Permiss	Permiss	Protecte	Permiss	Permiss
Signal group	0	2	0	0	6	0	3	8	0	7	4	0
Auxiliary Signal Groups												
Lead / Lag	-	-	-	-	-	-	Lead	-	-	Lead	-	-

Movement, Approach, & Intersection Results

V/C, Movement V/C Ratio	0.08	0.00	0.28	0.01	0.03	0.03	0.01	0.40	0.04	0.10	0.31	0.01
Intersection LOS	E											
Intersection V/C	0.904											

Intersection Level Of Service Report
Intersection 10: 4th Street (NS) at Arrow Highway (EW)

Control Type:	Signalized	Delay (sec / veh):	-
Analysis Method:	ICU 1	Level Of Service:	A
Analysis Period:	15 minutes	Volume to Capacity (v/c):	0.555

Intersection Setup

Name	4th Street			4th Street			Arrow Highway			Arrow Highway		
Approach	Northbound			Southbound			Eastbound			Westbound		
Lane Configuration												
Turning Movement	Left	Thru	Right	Left	Thru	Right	Left	Thru	Right	Left	Thru	Right
Lane Width [ft]	12.00	12.00	12.00	12.00	12.00	12.00	12.00	12.00	12.00	12.00	12.00	12.00
No. of Lanes in Pocket	1	0	0	0	0	0	1	0	1	1	0	0
Pocket Length [ft]	55.00	100.00	100.00	100.00	100.00	100.00	145.00	100.00	150.00	195.00	100.00	100.00
Speed [mph]	35.00			25.00			45.00			45.00		
Grade [%]	0.00			0.00			0.00			0.00		
Crosswalk	Yes			Yes			Yes			Yes		

Volumes

Name	4th Street			4th Street			Arrow Highway			Arrow Highway		
Base Volume Input [veh/h]	143	1	44	11	0	12	5	1758	39	41	923	2
Base Volume Adjustment Factor	1.0000	1.0000	1.0000	1.0000	1.0000	1.0000	1.0000	1.0000	1.0000	1.0000	1.0000	1.0000
Heavy Vehicles Percentage [%]	2.00	2.00	2.00	2.00	2.00	2.00	2.00	2.00	2.00	2.00	2.00	2.00
Growth Rate	1.01	1.01	1.01	1.01	1.01	1.01	1.01	1.01	1.01	1.01	1.01	1.01
In-Process Volume [veh/h]	0	0	0	0	0	0	0	0	0	0	0	0
Site-Generated Trips [veh/h]	0	0	0	0	0	0	0	0	0	0	0	0
Diverted Trips [veh/h]	0	0	0	0	0	0	0	0	0	0	0	0
Pass-by Trips [veh/h]	0	0	0	0	0	0	0	0	0	0	0	0
Existing Site Adjustment Volume [veh/h]	0	0	0	0	0	0	0	0	0	0	0	0
Other Volume [veh/h]	0	0	0	0	0	0	0	0	0	0	0	0
Total Hourly Volume [veh/h]	144	1	44	11	0	12	5	1776	39	41	932	2
Peak Hour Factor	1.0000	1.0000	1.0000	1.0000	1.0000	1.0000	1.0000	1.0000	1.0000	1.0000	1.0000	1.0000
Other Adjustment Factor	1.0000	1.0000	1.0000	1.0000	1.0000	1.0000	1.0000	1.0000	1.0000	1.0000	1.0000	1.0000
Total 15-Minute Volume [veh/h]	36	0	11	3	0	3	1	444	10	10	233	1
Total Analysis Volume [veh/h]	144	1	44	11	0	12	5	1776	39	41	932	2
Pedestrian Volume [ped/h]	0			0			0			0		
Bicycle Volume [bicycles/h]	0			0			0			0		

Intersection Settings

Cycle Length [s]	100
Lost time [s]	10.00

Phasing & Timing

Control Type	Split	Split	Split	Split	Split	Split	Protecte	Permiss	Permiss	Protecte	Permiss	Permiss
Signal group	0	2	0	0	6	0	3	8	0	7	4	0
Auxiliary Signal Groups												
Lead / Lag	-	-	-	-	-	-	Lead	-	-	Lead	-	-

Movement, Approach, & Intersection Results

V/C, Movement V/C Ratio	0.05	0.05	0.03	0.01	0.00	0.01	0.00	0.37	0.02	0.03	0.29	0.00
Intersection LOS	A											
Intersection V/C	0.555											

Intersection Level Of Service Report
Intersection 11: Irwindale Avenue (NS) at I-210 WB Ramps (EW)

Control Type:	Signalized	Delay (sec / veh):	-
Analysis Method:	ICU 1	Level Of Service:	A
Analysis Period:	15 minutes	Volume to Capacity (v/c):	0.540

Intersection Setup

Name	Irwindale Avenue				I-210 WB Ramps	
Approach	Northbound		Southbound		Westbound	
Lane Configuration						
Turning Movement	Thru	Right	Left	Thru	Left	Right
Lane Width [ft]	12.00	12.00	12.00	12.00	12.00	12.00
No. of Lanes in Pocket	0	0	0	0	0	0
Pocket Length [ft]	100.00	100.00	100.00	100.00	100.00	100.00
Speed [mph]	35.00		35.00		35.00	
Grade [%]	0.00		0.00		0.00	
Crosswalk	No		No		Yes	

Volumes

Name	Irwindale Avenue				I-210 WB Ramps	
Base Volume Input [veh/h]	793	0	0	1473	192	206
Base Volume Adjustment Factor	1.0000	1.0000	1.0000	1.0000	1.0000	1.0000
Heavy Vehicles Percentage [%]	2.00	2.00	2.00	2.00	2.00	2.00
Growth Rate	1.01	1.00	1.00	1.01	1.01	1.01
In-Process Volume [veh/h]	0	0	0	0	0	0
Site-Generated Trips [veh/h]	0	0	0	0	0	0
Diverted Trips [veh/h]	0	0	0	0	0	0
Pass-by Trips [veh/h]	0	0	0	0	0	0
Existing Site Adjustment Volume [veh/h]	0	0	0	0	0	0
Other Volume [veh/h]	0	0	0	0	0	0
Total Hourly Volume [veh/h]	801	0	0	1488	194	208
Peak Hour Factor	1.0000	1.0000	1.0000	1.0000	1.0000	1.0000
Other Adjustment Factor	1.0000	1.0000	1.0000	1.0000	1.0000	1.0000
Total 15-Minute Volume [veh/h]	200	0	0	372	49	52
Total Analysis Volume [veh/h]	801	0	0	1488	194	208
Pedestrian Volume [ped/h]	0		0		0	
Bicycle Volume [bicycles/h]	0		0		0	

Intersection Settings

Cycle Length [s]	100
Lost time [s]	10.00

Phasing & Timing

Control Type	Permissive	Permissive	Permissive	Permissive	Split	Split
Signal group	2	0	0	6	7	0
Auxiliary Signal Groups						
Lead / Lag	-	-	-	-	Lead	-

Movement, Approach, & Intersection Results

V/C, Movement V/C Ratio	0.17	0.00	0.00	0.31	0.06	0.13
Intersection LOS	A					
Intersection V/C	0.540					

Intersection Level Of Service Report
Intersection 12: Irwindale Avenue (NS) at I-210 EB Ramps (EW)

Control Type:	Signalized	Delay (sec / veh):	-
Analysis Method:	ICU 1	Level Of Service:	C
Analysis Period:	15 minutes	Volume to Capacity (v/c):	0.747

Intersection Setup

Name	Irwindale Avenue			Irwindale Avenue			I-210 EB Ramps			I-210 EB Ramps		
Approach	Northbound			Southbound			Eastbound			Westbound		
Lane Configuration												
Turning Movement	Left	Thru	Right	Left	Thru	Right	Left	Thru	Right	Left	Thru	Right
Lane Width [ft]	12.00	12.00	12.00	12.00	12.00	12.00	12.00	12.00	12.00	12.00	12.00	12.00
No. of Lanes in Pocket	0	0	1	1	0	0	0	0	0	0	0	0
Pocket Length [ft]	100.00	100.00	505.00	330.00	100.00	100.00	100.00	100.00	100.00	100.00	100.00	100.00
Speed [mph]	35.00			35.00			35.00			35.00		
Grade [%]	0.00			0.00			0.00			0.00		
Crosswalk	No			No			No			Yes		

Volumes

Name	Irwindale Avenue			Irwindale Avenue			I-210 EB Ramps			I-210 EB Ramps		
Base Volume Input [veh/h]	0	1034	336	416	792	0	375	0	456	0	0	0
Base Volume Adjustment Factor	1.0000	1.0000	1.0000	1.0000	1.0000	1.0000	1.0000	1.0000	1.0000	1.0000	1.0000	1.0000
Heavy Vehicles Percentage [%]	2.00	2.00	2.00	2.00	2.00	2.00	2.00	2.00	2.00	2.00	2.00	2.00
Growth Rate	1.00	1.01	1.01	1.01	1.01	1.00	1.01	1.00	1.01	1.00	1.00	1.00
In-Process Volume [veh/h]	0	0	0	0	0	0	0	0	0	0	0	0
Site-Generated Trips [veh/h]	0	0	0	0	0	0	0	0	0	0	0	0
Diverted Trips [veh/h]	0	0	0	0	0	0	0	0	0	0	0	0
Pass-by Trips [veh/h]	0	0	0	0	0	0	0	0	0	0	0	0
Existing Site Adjustment Volume [veh/h]	0	0	0	0	0	0	0	0	0	0	0	0
Other Volume [veh/h]	0	0	0	0	0	0	0	0	0	0	0	0
Total Hourly Volume [veh/h]	0	1044	339	420	800	0	379	0	461	0	0	0
Peak Hour Factor	1.0000	1.0000	1.0000	1.0000	1.0000	1.0000	1.0000	1.0000	1.0000	1.0000	1.0000	1.0000
Other Adjustment Factor	1.0000	1.0000	1.0000	1.0000	1.0000	1.0000	1.0000	1.0000	1.0000	1.0000	1.0000	1.0000
Total 15-Minute Volume [veh/h]	0	261	85	105	200	0	95	0	115	0	0	0
Total Analysis Volume [veh/h]	0	1044	339	420	800	0	379	0	461	0	0	0
Pedestrian Volume [ped/h]	0			0			0			0		
Bicycle Volume [bicycles/h]	0			0			0			0		

Intersection Settings

Cycle Length [s]	100
Lost time [s]	10.00

Phasing & Timing

Control Type	Permiss	Permiss	Permiss	Protecte	Permiss	Permiss	Split	Permiss	Split	Permiss	Permiss	Permiss
Signal group	0	2	0	1	6	0	3	0	0	0	0	0
Auxiliary Signal Groups												
Lead / Lag	-	-	-	Lead	-	-	Lead	-	-	-	-	-

Movement, Approach, & Intersection Results

V/C, Movement V/C Ratio	0.00	0.33	0.21	0.13	0.25	0.00	0.12	0.00	0.18	0.00	0.00	0.00
Intersection LOS	C											
Intersection V/C	0.747											

Intersection Level Of Service Report

Intersection 13: Irwindale Avenue (NS) at Jardin De Roca/Irwindale Rd (EW)

Control Type:	Signalized	Delay (sec / veh):	-
Analysis Method:	ICU 1	Level Of Service:	B
Analysis Period:	15 minutes	Volume to Capacity (v/c):	0.697

Intersection Setup

Name	Irwindale Avenue			Irwindale Avenue			Jardin De Roca			Irwindale Road		
Approach	Northbound			Southbound			Eastbound			Westbound		
Lane Configuration												
Turning Movement	Left	Thru	Right	Left	Thru	Right	Left	Thru	Right	Left	Thru	Right
Lane Width [ft]	12.00	12.00	12.00	12.00	12.00	12.00	12.00	12.00	12.00	12.00	12.00	12.00
No. of Lanes in Pocket	1	0	1	1	0	0	0	0	0	0	0	0
Pocket Length [ft]	130.00	100.00	180.00	245.00	100.00	100.00	100.00	100.00	100.00	100.00	100.00	100.00
Speed [mph]	35.00			35.00			25.00			25.00		
Grade [%]	0.00			0.00			0.00			0.00		
Crosswalk	No			No			No			Yes		

Volumes

Name	Irwindale Avenue			Irwindale Avenue			Jardin De Roca			Irwindale Road		
Base Volume Input [veh/h]	28	1163	42	35	1205	7	25	0	80	113	0	178
Base Volume Adjustment Factor	1.0000	1.0000	1.0000	1.0000	1.0000	1.0000	1.0000	1.0000	1.0000	1.0000	1.0000	1.0000
Heavy Vehicles Percentage [%]	2.00	2.00	2.00	2.00	2.00	2.00	2.00	2.00	2.00	2.00	2.00	2.00
Growth Rate	1.01	1.01	1.01	1.01	1.01	1.01	1.01	1.00	1.01	1.01	1.00	1.01
In-Process Volume [veh/h]	0	0	0	0	0	0	0	0	0	0	0	0
Site-Generated Trips [veh/h]	0	0	0	0	0	0	0	0	0	0	0	0
Diverted Trips [veh/h]	0	0	0	0	0	0	0	0	0	0	0	0
Pass-by Trips [veh/h]	0	0	0	0	0	0	0	0	0	0	0	0
Existing Site Adjustment Volume [veh/h]	0	0	0	0	0	0	0	0	0	0	0	0
Other Volume [veh/h]	0	0	0	0	0	0	0	0	0	0	0	0
Total Hourly Volume [veh/h]	28	1175	42	35	1217	7	25	0	81	114	0	180
Peak Hour Factor	1.0000	1.0000	1.0000	1.0000	1.0000	1.0000	1.0000	1.0000	1.0000	1.0000	1.0000	1.0000
Other Adjustment Factor	1.0000	1.0000	1.0000	1.0000	1.0000	1.0000	1.0000	1.0000	1.0000	1.0000	1.0000	1.0000
Total 15-Minute Volume [veh/h]	7	294	11	9	304	2	6	0	20	29	0	45
Total Analysis Volume [veh/h]	28	1175	42	35	1217	7	25	0	81	114	0	180
Pedestrian Volume [ped/h]	0			0			0			0		
Bicycle Volume [bicycles/h]	0			0			0			0		

Intersection Settings

Cycle Length [s]	100
Lost time [s]	10.00

Phasing & Timing

Control Type	Protecte	Permiss	Permiss	Protecte	Permiss	Permiss	Permiss	Permiss	Permiss	Permiss	Permiss	Permiss
Signal group	5	2	0	1	6	0	3	0	0	7	0	0
Auxiliary Signal Groups												
Lead / Lag	Lead	-	-	Lead	-	-	Lead	-	-	Lead	-	-

Movement, Approach, & Intersection Results

V/C, Movement V/C Ratio	0.02	0.37	0.03	0.02	0.38	0.00	0.02	0.00	0.07	0.07	0.00	0.28
Intersection LOS	B											
Intersection V/C	0.697											

Intersection Level Of Service Report
Intersection 14: Irwindale Avenue (NS) at 1st Street (EW)

Control Type:	Signalized	Delay (sec / veh):	-
Analysis Method:	ICU 1	Level Of Service:	A
Analysis Period:	15 minutes	Volume to Capacity (v/c):	0.447

Intersection Setup

Name	Irwindale Avenue			Irwindale Avenue			1st Street			1st Street		
Approach	Northbound			Southbound			Eastbound			Westbound		
Lane Configuration												
Turning Movement	Left	Thru	Right	Left	Thru	Right	Left	Thru	Right	Left	Thru	Right
Lane Width [ft]	12.00	12.00	12.00	12.00	12.00	12.00	12.00	12.00	12.00	12.00	12.00	12.00
No. of Lanes in Pocket	1	0	1	1	0	1	1	0	1	1	0	1
Pocket Length [ft]	100.00	100.00	70.00	120.00	100.00	240.00	90.00	100.00	95.00	75.00	100.00	75.00
Speed [mph]	35.00			35.00			35.00			25.00		
Grade [%]	0.00			0.00			0.00			0.00		
Crosswalk	Yes			No			Yes			Yes		

Volumes

Name	Irwindale Avenue			Irwindale Avenue			1st Street			1st Street		
Base Volume Input [veh/h]	11	878	4	9	1337	53	167	0	43	10	0	6
Base Volume Adjustment Factor	1.0000	1.0000	1.0000	1.0000	1.0000	1.0000	1.0000	1.0000	1.0000	1.0000	1.0000	1.0000
Heavy Vehicles Percentage [%]	2.00	2.00	2.00	2.00	2.00	2.00	2.00	2.00	2.00	2.00	2.00	2.00
Growth Rate	1.01	1.01	1.01	1.01	1.01	1.01	1.01	1.01	1.01	1.01	1.01	1.01
In-Process Volume [veh/h]	0	0	0	0	0	0	0	0	0	0	0	0
Site-Generated Trips [veh/h]	0	0	0	0	0	0	0	0	0	0	0	0
Diverted Trips [veh/h]	0	0	0	0	0	0	0	0	0	0	0	0
Pass-by Trips [veh/h]	0	0	0	0	0	0	0	0	0	0	0	0
Existing Site Adjustment Volume [veh/h]	0	0	0	0	0	0	0	0	0	0	0	0
Other Volume [veh/h]	0	0	0	0	0	0	0	0	0	0	0	0
Total Hourly Volume [veh/h]	11	887	4	9	1350	54	169	0	43	10	0	6
Peak Hour Factor	1.0000	1.0000	1.0000	1.0000	1.0000	1.0000	1.0000	1.0000	1.0000	1.0000	1.0000	1.0000
Other Adjustment Factor	1.0000	1.0000	1.0000	1.0000	1.0000	1.0000	1.0000	1.0000	1.0000	1.0000	1.0000	1.0000
Total 15-Minute Volume [veh/h]	3	222	1	2	338	14	42	0	11	3	0	2
Total Analysis Volume [veh/h]	11	887	4	9	1350	54	169	0	43	10	0	6
Pedestrian Volume [ped/h]	0			0			0			0		
Bicycle Volume [bicycles/h]	0			0			0			0		

Intersection Settings

Cycle Length [s]	100
Lost time [s]	10.00

Phasing & Timing

Control Type	Permiss	Permiss	Permiss	Permiss	Permiss	Permiss	Split	Split	Split	Split	Split	Split
Signal group	0	2	0	0	6	0	0	8	0	0	4	0
Auxiliary Signal Groups												
Lead / Lag	-	-	-	-	-	-	-	-	-	-	-	-

Movement, Approach, & Intersection Results

V/C, Movement V/C Ratio	0.01	0.28	0.28	0.01	0.28	0.03	0.05	0.00	0.03	0.01	0.00	0.00
Intersection LOS	A											
Intersection V/C	0.447											

Intersection Level Of Service Report
Intersection 15: Irwindale Avenue (NS) at Gladstone Street (EW)

Control Type:	Signalized	Delay (sec / veh):	-
Analysis Method:	ICU 1	Level Of Service:	B
Analysis Period:	15 minutes	Volume to Capacity (v/c):	0.651

Intersection Setup

Name	Irwindale Avenue			Irwindale Avenue			Gladstone Street			Gladstone Street		
Approach	Northbound			Southbound			Eastbound			Westbound		
Lane Configuration												
Turning Movement	Left	Thru	Right	Left	Thru	Right	Left	Thru	Right	Left	Thru	Right
Lane Width [ft]	12.00	12.00	12.00	12.00	12.00	12.00	12.00	12.00	12.00	12.00	12.00	12.00
No. of Lanes in Pocket	1	0	0	2	0	0	1	0	0	1	0	1
Pocket Length [ft]	120.00	100.00	100.00	210.00	100.00	100.00	50.00	100.00	100.00	200.00	100.00	190.00
Speed [mph]	35.00			35.00			25.00			40.00		
Grade [%]	0.00			0.00			0.00			0.00		
Crosswalk	Yes			Yes			Yes			Yes		

Volumes

Name	Irwindale Avenue			Irwindale Avenue			Gladstone Street			Gladstone Street		
Base Volume Input [veh/h]	1	687	308	530	889	8	5	85	27	150	4	207
Base Volume Adjustment Factor	1.0000	1.0000	1.0000	1.0000	1.0000	1.0000	1.0000	1.0000	1.0000	1.0000	1.0000	1.0000
Heavy Vehicles Percentage [%]	2.00	2.00	2.00	2.00	2.00	2.00	2.00	2.00	2.00	2.00	2.00	2.00
Growth Rate	1.01	1.01	1.01	1.01	1.01	1.01	1.01	1.01	1.01	1.01	1.01	1.01
In-Process Volume [veh/h]	0	0	0	0	0	0	0	0	0	0	0	0
Site-Generated Trips [veh/h]	0	0	0	0	0	0	0	0	0	0	0	0
Diverted Trips [veh/h]	0	0	0	0	0	0	0	0	0	0	0	0
Pass-by Trips [veh/h]	0	0	0	0	0	0	0	0	0	0	0	0
Existing Site Adjustment Volume [veh/h]	0	0	0	0	0	0	0	0	0	0	0	0
Other Volume [veh/h]	0	0	0	0	0	0	0	0	0	0	0	0
Total Hourly Volume [veh/h]	1	694	311	535	898	8	5	86	27	152	4	209
Peak Hour Factor	1.0000	1.0000	1.0000	1.0000	1.0000	1.0000	1.0000	1.0000	1.0000	1.0000	1.0000	1.0000
Other Adjustment Factor	1.0000	1.0000	1.0000	1.0000	1.0000	1.0000	1.0000	1.0000	1.0000	1.0000	1.0000	1.0000
Total 15-Minute Volume [veh/h]	0	174	78	134	225	2	1	22	7	38	1	52
Total Analysis Volume [veh/h]	1	694	311	535	898	8	5	86	27	152	4	209
Pedestrian Volume [ped/h]	0			0			0			0		
Bicycle Volume [bicycles/h]	0			0			0			0		

Intersection Settings

Cycle Length [s]	100
Lost time [s]	10.00

Phasing & Timing

Control Type	Protecte	Permiss	Permiss	Protecte	Permiss	Permiss	Permiss	Permiss	Permiss	Permiss	Permiss	Overlap
Signal group	5	2	0	1	6	0	0	8	0	0	4	4
Auxiliary Signal Groups												1,4
Lead / Lag	Lead	-	-	Lead	-	-	-	-	-	-	-	-

Movement, Approach, & Intersection Results

V/C, Movement V/C Ratio	0.00	0.22	0.19	0.17	0.28	0.28	0.00	0.05	0.02	0.10	0.00	0.00
Intersection LOS	B											
Intersection V/C	0.651											

Intersection Level Of Service Report

Intersection 16: Irwindale Avenue (NS) at Arrow Highway (EW)

Control Type:	Signalized	Delay (sec / veh):	-
Analysis Method:	ICU 1	Level Of Service:	C
Analysis Period:	15 minutes	Volume to Capacity (v/c):	0.761

Intersection Setup

Name	Irwindale Avenue			Irwindale Avenue			Arrow Highway			Arrow Highway		
Approach	Northbound			Southbound			Eastbound			Westbound		
Lane Configuration												
Turning Movement	Left	Thru	Right	Left	Thru	Right	Left	Thru	Right	Left	Thru	Right
Lane Width [ft]	12.00	12.00	12.00	12.00	12.00	12.00	12.00	12.00	12.00	12.00	12.00	12.00
No. of Lanes in Pocket	1	0	0	1	0	1	2	0	0	1	0	0
Pocket Length [ft]	175.00	100.00	100.00	185.00	100.00	185.00	205.00	100.00	100.00	335.00	100.00	100.00
Speed [mph]	35.00			35.00			45.00			45.00		
Grade [%]	0.00			0.00			0.00			0.00		
Crosswalk	Yes			Yes			Yes			Yes		

Volumes

Name	Irwindale Avenue			Irwindale Avenue			Arrow Highway			Arrow Highway		
Base Volume Input [veh/h]	91	488	100	191	714	363	373	1315	73	99	475	63
Base Volume Adjustment Factor	1.0000	1.0000	1.0000	1.0000	1.0000	1.0000	1.0000	1.0000	1.0000	1.0000	1.0000	1.0000
Heavy Vehicles Percentage [%]	2.00	2.00	2.00	2.00	2.00	2.00	2.00	2.00	2.00	2.00	2.00	2.00
Growth Rate	1.01	1.01	1.01	1.01	1.01	1.01	1.01	1.01	1.01	1.01	1.01	1.01
In-Process Volume [veh/h]	0	0	0	0	0	0	0	0	0	0	0	0
Site-Generated Trips [veh/h]	0	0	0	0	0	0	0	0	0	0	0	0
Diverted Trips [veh/h]	0	0	0	0	0	0	0	0	0	0	0	0
Pass-by Trips [veh/h]	0	0	0	0	0	0	0	0	0	0	0	0
Existing Site Adjustment Volume [veh/h]	0	0	0	0	0	0	0	0	0	0	0	0
Other Volume [veh/h]	0	0	0	0	0	0	0	0	0	0	0	0
Total Hourly Volume [veh/h]	92	493	101	193	721	367	377	1328	74	100	480	64
Peak Hour Factor	1.0000	1.0000	1.0000	1.0000	1.0000	1.0000	1.0000	1.0000	1.0000	1.0000	1.0000	1.0000
Other Adjustment Factor	1.0000	1.0000	1.0000	1.0000	1.0000	1.0000	1.0000	1.0000	1.0000	1.0000	1.0000	1.0000
Total 15-Minute Volume [veh/h]	23	123	25	48	180	92	94	332	19	25	120	16
Total Analysis Volume [veh/h]	92	493	101	193	721	367	377	1328	74	100	480	64
Pedestrian Volume [ped/h]	0			0			0			0		
Bicycle Volume [bicycles/h]	0			0			0			0		

Intersection Settings

Cycle Length [s]	100
Lost time [s]	10.00

Phasing & Timing

Control Type	Protecte	Permiss	Permiss	Protecte	Permiss	Overlap	Protecte	Permiss	Permiss	Protecte	Permiss	Permiss
Signal group	5	2	0	1	6	6	3	8	0	7	4	0
Auxiliary Signal Groups						3,6						
Lead / Lag	Lead	-	-	Lead	-	-	Lead	-	-	Lead	-	-

Movement, Approach, & Intersection Results

V/C, Movement V/C Ratio	0.06	0.19	0.19	0.12	0.23	0.11	0.12	0.29	0.29	0.06	0.17	0.17
Intersection LOS	C											
Intersection V/C	0.761											

Intersection Level Of Service Report
Intersection 17: Vincent Avenue (NS) at Gladstone Street (EW)

Control Type:	Signalized	Delay (sec / veh):	-
Analysis Method:	ICU 1	Level Of Service:	D
Analysis Period:	15 minutes	Volume to Capacity (v/c):	0.843

Intersection Setup

Name	Vincent Avenue			Vincent Avenue			Gladstone Street			Gladstone Street		
Approach	Northbound			Southbound			Eastbound			Westbound		
Lane Configuration												
Turning Movement	Left	Thru	Right	Left	Thru	Right	Left	Thru	Right	Left	Thru	Right
Lane Width [ft]	12.00	12.00	12.00	12.00	12.00	12.00	12.00	12.00	12.00	12.00	12.00	12.00
No. of Lanes in Pocket	1	0	0	0	0	0	2	0	0	1	0	0
Pocket Length [ft]	195.00	100.00	100.00	100.00	100.00	100.00	230.00	100.00	100.00	175.00	100.00	100.00
Speed [mph]	45.00			25.00			45.00			45.00		
Grade [%]	0.00			0.00			0.00			0.00		
Crosswalk	Yes			Yes			No			Yes		

Volumes

Name	Vincent Avenue			Vincent Avenue			Gladstone Street			Gladstone Street		
Base Volume Input [veh/h]	113	24	475	16	25	18	14	862	160	150	203	3
Base Volume Adjustment Factor	1.0000	1.0000	1.0000	1.0000	1.0000	1.0000	1.0000	1.0000	1.0000	1.0000	1.0000	1.0000
Heavy Vehicles Percentage [%]	2.00	2.00	2.00	2.00	2.00	2.00	2.00	2.00	2.00	2.00	2.00	2.00
Growth Rate	1.01	1.01	1.01	1.01	1.01	1.01	1.01	1.01	1.01	1.01	1.01	1.01
In-Process Volume [veh/h]	0	0	0	0	0	0	0	0	0	0	0	0
Site-Generated Trips [veh/h]	0	0	0	0	0	0	0	0	0	0	0	0
Diverted Trips [veh/h]	0	0	0	0	0	0	0	0	0	0	0	0
Pass-by Trips [veh/h]	0	0	0	0	0	0	0	0	0	0	0	0
Existing Site Adjustment Volume [veh/h]	0	0	0	0	0	0	0	0	0	0	0	0
Other Volume [veh/h]	0	0	0	0	0	0	0	0	0	0	0	0
Total Hourly Volume [veh/h]	114	24	480	16	25	18	14	871	162	152	205	3
Peak Hour Factor	1.0000	1.0000	1.0000	1.0000	1.0000	1.0000	1.0000	1.0000	1.0000	1.0000	1.0000	1.0000
Other Adjustment Factor	1.0000	1.0000	1.0000	1.0000	1.0000	1.0000	1.0000	1.0000	1.0000	1.0000	1.0000	1.0000
Total 15-Minute Volume [veh/h]	29	6	120	4	6	5	4	218	41	38	51	1
Total Analysis Volume [veh/h]	114	24	480	16	25	18	14	871	162	152	205	3
Pedestrian Volume [ped/h]	0			0			0			0		
Bicycle Volume [bicycles/h]	0			0			0			0		

Intersection Settings

Cycle Length [s]	100
Lost time [s]	10.00

Phasing & Timing

Control Type	Split	Split	Split	Split	Split	Split	Protecte	Permiss	Permiss	Protecte	Permiss	Permiss
Signal group	0	2	0	0	6	0	3	8	0	7	4	0
Auxiliary Signal Groups												
Lead / Lag	-	-	-	-	-	-	Lead	-	-	Lead	-	-

Movement, Approach, & Intersection Results

V/C, Movement V/C Ratio	0.07	0.02	0.30	0.01	0.03	0.03	0.00	0.32	0.32	0.10	0.07	0.07
Intersection LOS	D											
Intersection V/C	0.843											

Intersection Level Of Service Report

Intersection 18: Vincent Avenue (NS) at Arrow Highway (EW)

Control Type:	Signalized	Delay (sec / veh):	-
Analysis Method:	ICU 1	Level Of Service:	C
Analysis Period:	15 minutes	Volume to Capacity (v/c):	0.782

Intersection Setup

Name	Vincent Avenue			Vincent Avenue			Arrow Highway			Arrow Highway		
Approach	Northbound			Southbound			Eastbound			Westbound		
Lane Configuration												
Turning Movement	Left	Thru	Right	Left	Thru	Right	Left	Thru	Right	Left	Thru	Right
Lane Width [ft]	12.00	12.00	12.00	12.00	12.00	12.00	12.00	12.00	12.00	12.00	12.00	12.00
No. of Lanes in Pocket	1	0	0	1	0	0	1	0	0	1	0	0
Pocket Length [ft]	200.00	100.00	100.00	200.00	100.00	100.00	215.00	100.00	100.00	160.00	100.00	100.00
Speed [mph]	45.00			45.00			45.00			45.00		
Grade [%]	0.00			0.00			0.00			0.00		
Crosswalk	Yes			Yes			Yes			Yes		

Volumes

Name	Vincent Avenue			Vincent Avenue			Arrow Highway			Arrow Highway		
Base Volume Input [veh/h]	78	314	143	38	276	84	228	1417	171	106	485	40
Base Volume Adjustment Factor	1.0000	1.0000	1.0000	1.0000	1.0000	1.0000	1.0000	1.0000	1.0000	1.0000	1.0000	1.0000
Heavy Vehicles Percentage [%]	2.00	2.00	2.00	2.00	2.00	2.00	2.00	2.00	2.00	2.00	2.00	2.00
Growth Rate	1.01	1.01	1.01	1.01	1.01	1.01	1.01	1.01	1.01	1.01	1.01	1.01
In-Process Volume [veh/h]	0	0	0	0	0	0	0	0	0	0	0	0
Site-Generated Trips [veh/h]	0	0	0	0	0	0	0	0	0	0	0	0
Diverted Trips [veh/h]	0	0	0	0	0	0	0	0	0	0	0	0
Pass-by Trips [veh/h]	0	0	0	0	0	0	0	0	0	0	0	0
Existing Site Adjustment Volume [veh/h]	0	0	0	0	0	0	0	0	0	0	0	0
Other Volume [veh/h]	0	0	0	0	0	0	0	0	0	0	0	0
Total Hourly Volume [veh/h]	79	317	144	38	279	85	230	1431	173	107	490	40
Peak Hour Factor	1.0000	1.0000	1.0000	1.0000	1.0000	1.0000	1.0000	1.0000	1.0000	1.0000	1.0000	1.0000
Other Adjustment Factor	1.0000	1.0000	1.0000	1.0000	1.0000	1.0000	1.0000	1.0000	1.0000	1.0000	1.0000	1.0000
Total 15-Minute Volume [veh/h]	20	79	36	10	70	21	58	358	43	27	123	10
Total Analysis Volume [veh/h]	79	317	144	38	279	85	230	1431	173	107	490	40
Pedestrian Volume [ped/h]	0			0			0			0		
Bicycle Volume [bicycles/h]	0			0			0			0		

Intersection Settings

Cycle Length [s]	100
Lost time [s]	10.00

Phasing & Timing

Control Type	Permiss	Permiss	Permiss	Permiss	Permiss	Permiss	Permiss	Permiss	Permiss	Permiss	Permiss	Permiss
Signal group	0	2	0	0	6	0	0	8	0	0	4	0
Auxiliary Signal Groups												
Lead / Lag	-	-	-	-	-	-	-	-	-	-	-	-

Movement, Approach, & Intersection Results

V/C, Movement V/C Ratio	0.05	0.14	0.14	0.02	0.11	0.11	0.14	0.45	0.11	0.07	0.15	0.03
Intersection LOS	C											
Intersection V/C	0.782											

Intersection Level Of Service Report
Intersection 21: Vincent Avenue (NS) at Cypress Street (EW)

Control Type:	Signalized	Delay (sec / veh):	-
Analysis Method:	ICU 1	Level Of Service:	C
Analysis Period:	15 minutes	Volume to Capacity (v/c):	0.726

Intersection Setup

Name	Vincent Avenue			Vincent Avenue			Cypress Street			Cypress Street		
Approach	Northbound			Southbound			Eastbound			Westbound		
Lane Configuration												
Turning Movement	Left	Thru	Right	Left	Thru	Right	Left	Thru	Right	Left	Thru	Right
Lane Width [ft]	12.00	12.00	12.00	12.00	12.00	12.00	12.00	12.00	12.00	12.00	12.00	12.00
No. of Lanes in Pocket	1	0	0	1	0	0	1	0	0	1	0	0
Pocket Length [ft]	120.00	100.00	100.00	120.00	100.00	100.00	100.00	100.00	100.00	150.00	100.00	100.00
Speed [mph]	40.00			45.00			40.00			40.00		
Grade [%]	0.00			0.00			0.00			0.00		
Crosswalk	Yes			Yes			Yes			Yes		

Volumes

Name	Vincent Avenue			Vincent Avenue			Cypress Street			Cypress Street		
Base Volume Input [veh/h]	59	447	138	59	448	30	88	984	112	92	295	41
Base Volume Adjustment Factor	1.0000	1.0000	1.0000	1.0000	1.0000	1.0000	1.0000	1.0000	1.0000	1.0000	1.0000	1.0000
Heavy Vehicles Percentage [%]	2.00	2.00	2.00	2.00	2.00	2.00	2.00	2.00	2.00	2.00	2.00	2.00
Growth Rate	1.01	1.01	1.01	1.01	1.01	1.01	1.01	1.01	1.01	1.01	1.01	1.01
In-Process Volume [veh/h]	0	0	0	0	0	0	0	0	0	0	0	0
Site-Generated Trips [veh/h]	0	0	0	0	0	0	0	0	0	0	0	0
Diverted Trips [veh/h]	0	0	0	0	0	0	0	0	0	0	0	0
Pass-by Trips [veh/h]	0	0	0	0	0	0	0	0	0	0	0	0
Existing Site Adjustment Volume [veh/h]	0	0	0	0	0	0	0	0	0	0	0	0
Other Volume [veh/h]	0	0	0	0	0	0	0	0	0	0	0	0
Total Hourly Volume [veh/h]	60	451	139	60	452	30	89	994	113	93	298	41
Peak Hour Factor	1.0000	1.0000	1.0000	1.0000	1.0000	1.0000	1.0000	1.0000	1.0000	1.0000	1.0000	1.0000
Other Adjustment Factor	1.0000	1.0000	1.0000	1.0000	1.0000	1.0000	1.0000	1.0000	1.0000	1.0000	1.0000	1.0000
Total 15-Minute Volume [veh/h]	15	113	35	15	113	8	22	249	28	23	75	10
Total Analysis Volume [veh/h]	60	451	139	60	452	30	89	994	113	93	298	41
Pedestrian Volume [ped/h]	0			0			0			0		
Bicycle Volume [bicycles/h]	0			0			0			0		

Intersection Settings

Cycle Length [s]	100
Lost time [s]	10.00

Phasing & Timing

Control Type	Permiss	Permiss	Permiss	Permiss	Permiss	Permiss	Permiss	Permiss	Permiss	Permiss	Permiss	Permiss
Signal group	0	2	0	0	6	0	0	8	0	0	4	0
Auxiliary Signal Groups												
Lead / Lag	-	-	-	-	-	-	-	-	-	-	-	-

Movement, Approach, & Intersection Results

V/C, Movement V/C Ratio	0.04	0.18	0.18	0.04	0.15	0.15	0.06	0.35	0.35	0.06	0.11	0.11
Intersection LOS	C											
Intersection V/C	0.726											

Intersection Level Of Service Report

Intersection 22: Vincent Avenue (NS) at San Bernardino Road (EW)

Control Type:	Signalized	Delay (sec / veh):	-
Analysis Method:	ICU 1	Level Of Service:	B
Analysis Period:	15 minutes	Volume to Capacity (v/c):	0.658

Intersection Setup

Name	Vincent Avenue			Vincent Avenue			San Bernardino Road			San Berardino Road		
Approach	Northbound			Southbound			Eastbound			Westbound		
Lane Configuration												
Turning Movement	Left	Thru	Right	Left	Thru	Right	Left	Thru	Right	Left	Thru	Right
Lane Width [ft]	12.00	12.00	12.00	12.00	12.00	12.00	12.00	12.00	12.00	12.00	12.00	12.00
No. of Lanes in Pocket	1	0	0	1	0	0	1	0	0	1	0	0
Pocket Length [ft]	120.00	100.00	100.00	150.00	100.00	100.00	150.00	100.00	100.00	165.00	100.00	100.00
Speed [mph]	35.00			40.00			40.00			40.00		
Grade [%]	0.00			0.00			0.00			0.00		
Crosswalk	Yes			Yes			Yes			Yes		

Volumes

Name	Vincent Avenue			Vincent Avenue			San Bernardino Road			San Berardino Road		
Base Volume Input [veh/h]	94	563	77	76	574	48	112	651	110	98	273	80
Base Volume Adjustment Factor	1.0000	1.0000	1.0000	1.0000	1.0000	1.0000	1.0000	1.0000	1.0000	1.0000	1.0000	1.0000
Heavy Vehicles Percentage [%]	2.00	2.00	2.00	2.00	2.00	2.00	2.00	2.00	2.00	2.00	2.00	2.00
Growth Rate	1.01	1.01	1.01	1.01	1.01	1.01	1.01	1.01	1.01	1.01	1.01	1.01
In-Process Volume [veh/h]	0	0	0	0	0	0	0	0	0	0	0	0
Site-Generated Trips [veh/h]	0	0	0	0	0	0	0	0	0	0	0	0
Diverted Trips [veh/h]	0	0	0	0	0	0	0	0	0	0	0	0
Pass-by Trips [veh/h]	0	0	0	0	0	0	0	0	0	0	0	0
Existing Site Adjustment Volume [veh/h]	0	0	0	0	0	0	0	0	0	0	0	0
Other Volume [veh/h]	0	0	0	0	0	0	0	0	0	0	0	0
Total Hourly Volume [veh/h]	95	569	78	77	580	48	113	658	111	99	276	81
Peak Hour Factor	1.0000	1.0000	1.0000	1.0000	1.0000	1.0000	1.0000	1.0000	1.0000	1.0000	1.0000	1.0000
Other Adjustment Factor	1.0000	1.0000	1.0000	1.0000	1.0000	1.0000	1.0000	1.0000	1.0000	1.0000	1.0000	1.0000
Total 15-Minute Volume [veh/h]	24	142	20	19	145	12	28	165	28	25	69	20
Total Analysis Volume [veh/h]	95	569	78	77	580	48	113	658	111	99	276	81
Pedestrian Volume [ped/h]	0			0			0			0		
Bicycle Volume [bicycles/h]	0			0			0			0		

Intersection Settings

Cycle Length [s]	100
Lost time [s]	10.00

Phasing & Timing

Control Type	Permiss	Permiss	Permiss	Permiss	Permiss	Permiss	Protecte	Permiss	Permiss	Protecte	Permiss	Permiss
Signal group	0	2	0	0	6	0	3	8	0	7	4	0
Auxiliary Signal Groups												
Lead / Lag	-	-	-	-	-	-	Lead	-	-	Lead	-	-

Movement, Approach, & Intersection Results

V/C, Movement V/C Ratio	0.06	0.20	0.20	0.05	0.20	0.20	0.07	0.24	0.24	0.06	0.11	0.11
Intersection LOS	B											
Intersection V/C	0.658											

Intersection Level Of Service Report
Intersection 23: Vincent Avenue (NS) at Badillo Street (EW)

Control Type:	Signalized	Delay (sec / veh):	-
Analysis Method:	ICU 1	Level Of Service:	C
Analysis Period:	15 minutes	Volume to Capacity (v/c):	0.763

Intersection Setup

Name	Vincent Avenue			Vincent Avenue			Dadillo Street			Badillo Street		
Approach	Northbound			Southbound			Eastbound			Westbound		
Lane Configuration												
Turning Movement	Left	Thru	Right	Left	Thru	Right	Left	Thru	Right	Left	Thru	Right
Lane Width [ft]	12.00	12.00	12.00	12.00	12.00	12.00	12.00	12.00	12.00	12.00	12.00	12.00
No. of Lanes in Pocket	1	0	0	1	0	0	1	0	0	1	0	0
Pocket Length [ft]	200.00	100.00	100.00	190.00	100.00	100.00	195.00	100.00	100.00	195.00	100.00	100.00
Speed [mph]	40.00			35.00			45.00			45.00		
Grade [%]	0.00			0.00			0.00			0.00		
Crosswalk	Yes			Yes			Yes			Yes		

Volumes

Name	Vincent Avenue			Vincent Avenue			Dadillo Street			Badillo Street		
Base Volume Input [veh/h]	93	584	144	62	702	53	65	953	172	130	421	56
Base Volume Adjustment Factor	1.0000	1.0000	1.0000	1.0000	1.0000	1.0000	1.0000	1.0000	1.0000	1.0000	1.0000	1.0000
Heavy Vehicles Percentage [%]	2.00	2.00	2.00	2.00	2.00	2.00	2.00	2.00	2.00	2.00	2.00	2.00
Growth Rate	1.01	1.01	1.01	1.01	1.01	1.01	1.01	1.01	1.01	1.01	1.01	1.01
In-Process Volume [veh/h]	0	0	0	0	0	0	0	0	0	0	0	0
Site-Generated Trips [veh/h]	0	0	0	0	0	0	0	0	0	0	0	0
Diverted Trips [veh/h]	0	0	0	0	0	0	0	0	0	0	0	0
Pass-by Trips [veh/h]	0	0	0	0	0	0	0	0	0	0	0	0
Existing Site Adjustment Volume [veh/h]	0	0	0	0	0	0	0	0	0	0	0	0
Other Volume [veh/h]	0	0	0	0	0	0	0	0	0	0	0	0
Total Hourly Volume [veh/h]	94	590	145	63	709	54	66	963	174	131	425	57
Peak Hour Factor	1.0000	1.0000	1.0000	1.0000	1.0000	1.0000	1.0000	1.0000	1.0000	1.0000	1.0000	1.0000
Other Adjustment Factor	1.0000	1.0000	1.0000	1.0000	1.0000	1.0000	1.0000	1.0000	1.0000	1.0000	1.0000	1.0000
Total 15-Minute Volume [veh/h]	24	148	36	16	177	14	17	241	44	33	106	14
Total Analysis Volume [veh/h]	94	590	145	63	709	54	66	963	174	131	425	57
Pedestrian Volume [ped/h]	0			0			0			0		
Bicycle Volume [bicycles/h]	0			0			0			0		

Intersection Settings

Cycle Length [s]	100
Lost time [s]	10.00

Phasing & Timing

Control Type	Protecte	Permiss	Permiss	Protecte	Permiss	Permiss	Protecte	Permiss	Permiss	Protecte	Permiss	Permiss
Signal group	5	2	0	1	6	0	3	8	0	7	4	0
Auxiliary Signal Groups												
Lead / Lag	Lead	-	-	Lead	-	-	Lead	-	-	Lead	-	-

Movement, Approach, & Intersection Results

V/C, Movement V/C Ratio	0.06	0.18	0.09	0.04	0.22	0.03	0.04	0.30	0.11	0.08	0.13	0.04
Intersection LOS	C											
Intersection V/C	0.763											

Intersection Level Of Service Report
Intersection 24: Vincent Avenue (NS) at Puente Avenue (EW)

Control Type:	Signalized	Delay (sec / veh):	-
Analysis Method:	ICU 1	Level Of Service:	B
Analysis Period:	15 minutes	Volume to Capacity (v/c):	0.633

Intersection Setup

Name	Vincent Avenue			Vincent Avenue			Puente Avenue			Puente Avenue		
Approach	Northbound			Southbound			Eastbound			Westbound		
Lane Configuration												
Turning Movement	Left	Thru	Right	Left	Thru	Right	Left	Thru	Right	Left	Thru	Right
Lane Width [ft]	12.00	12.00	12.00	12.00	12.00	12.00	12.00	12.00	12.00	12.00	12.00	12.00
No. of Lanes in Pocket	1	0	0	1	0	0	0	0	0	0	0	0
Pocket Length [ft]	195.00	100.00	100.00	195.00	100.00	100.00	100.00	100.00	100.00	100.00	100.00	100.00
Speed [mph]	40.00			40.00			40.00			40.00		
Grade [%]	0.00			0.00			0.00			0.00		
Crosswalk	Yes			Yes			Yes			Yes		

Volumes

Name	Vincent Avenue			Vincent Avenue			Puente Avenue			Puente Avenue		
Base Volume Input [veh/h]	73	727	78	63	832	60	75	540	67	48	265	37
Base Volume Adjustment Factor	1.0000	1.0000	1.0000	1.0000	1.0000	1.0000	1.0000	1.0000	1.0000	1.0000	1.0000	1.0000
Heavy Vehicles Percentage [%]	2.00	2.00	2.00	2.00	2.00	2.00	2.00	2.00	2.00	2.00	2.00	2.00
Growth Rate	1.01	1.01	1.01	1.01	1.01	1.01	1.01	1.01	1.01	1.01	1.01	1.01
In-Process Volume [veh/h]	0	0	0	0	0	0	0	0	0	0	0	0
Site-Generated Trips [veh/h]	0	0	0	0	0	0	0	0	0	0	0	0
Diverted Trips [veh/h]	0	0	0	0	0	0	0	0	0	0	0	0
Pass-by Trips [veh/h]	0	0	0	0	0	0	0	0	0	0	0	0
Existing Site Adjustment Volume [veh/h]	0	0	0	0	0	0	0	0	0	0	0	0
Other Volume [veh/h]	0	0	0	0	0	0	0	0	0	0	0	0
Total Hourly Volume [veh/h]	74	734	79	64	840	61	76	545	68	48	268	37
Peak Hour Factor	1.0000	1.0000	1.0000	1.0000	1.0000	1.0000	1.0000	1.0000	1.0000	1.0000	1.0000	1.0000
Other Adjustment Factor	1.0000	1.0000	1.0000	1.0000	1.0000	1.0000	1.0000	1.0000	1.0000	1.0000	1.0000	1.0000
Total 15-Minute Volume [veh/h]	19	184	20	16	210	15	19	136	17	12	67	9
Total Analysis Volume [veh/h]	74	734	79	64	840	61	76	545	68	48	268	37
Pedestrian Volume [ped/h]	0			0			0			0		
Bicycle Volume [bicycles/h]	0			0			0			0		

Intersection Settings

Cycle Length [s]	100
Lost time [s]	10.00

Phasing & Timing

Control Type	Permiss	Permiss	Permiss	Permiss	Permiss	Permiss	Permiss	Permiss	Permiss	Permiss	Permiss	Permiss
Signal group	0	2	0	0	6	0	0	8	0	0	4	0
Auxiliary Signal Groups												
Lead / Lag	-	-	-	-	-	-	-	-	-	-	-	-

Movement, Approach, & Intersection Results

V/C, Movement V/C Ratio	0.05	0.23	0.05	0.04	0.26	0.04	0.05	0.19	0.04	0.03	0.10	0.02
Intersection LOS	B											
Intersection V/C	0.633											

Intersection Level Of Service Report
Intersection 25: Vincent Avenue (NS) at Rowland Avenue (EW)

Control Type:	Signalized	Delay (sec / veh):	-
Analysis Method:	ICU 1	Level Of Service:	B
Analysis Period:	15 minutes	Volume to Capacity (v/c):	0.609

Intersection Setup

Name	Vincent Avenue			Vincent Avenue			Rowland Avenue			Rowland Avenue		
Approach	Northbound			Southbound			Eastbound			Westbound		
Lane Configuration												
Turning Movement	Left	Thru	Right	Left	Thru	Right	Left	Thru	Right	Left	Thru	Right
Lane Width [ft]	12.00	12.00	12.00	12.00	12.00	12.00	12.00	12.00	12.00	12.00	12.00	12.00
No. of Lanes in Pocket	1	0	0	1	0	0	0	0	0	0	0	0
Pocket Length [ft]	145.00	100.00	100.00	125.00	100.00	100.00	100.00	100.00	100.00	100.00	100.00	100.00
Speed [mph]	35.00			40.00			35.00			35.00		
Grade [%]	0.00			0.00			0.00			0.00		
Crosswalk	Yes			Yes			Yes			Yes		

Volumes

Name	Vincent Avenue			Vincent Avenue			Rowland Avenue			Rowland Avenue		
Base Volume Input [veh/h]	33	840	113	98	849	18	14	206	49	69	93	31
Base Volume Adjustment Factor	1.0000	1.0000	1.0000	1.0000	1.0000	1.0000	1.0000	1.0000	1.0000	1.0000	1.0000	1.0000
Heavy Vehicles Percentage [%]	2.00	2.00	2.00	2.00	2.00	2.00	2.00	2.00	2.00	2.00	2.00	2.00
Growth Rate	1.01	1.01	1.01	1.01	1.01	1.01	1.01	1.01	1.01	1.01	1.01	1.01
In-Process Volume [veh/h]	0	0	0	0	0	0	0	0	0	0	0	0
Site-Generated Trips [veh/h]	0	0	0	0	0	0	0	0	0	0	0	0
Diverted Trips [veh/h]	0	0	0	0	0	0	0	0	0	0	0	0
Pass-by Trips [veh/h]	0	0	0	0	0	0	0	0	0	0	0	0
Existing Site Adjustment Volume [veh/h]	0	0	0	0	0	0	0	0	0	0	0	0
Other Volume [veh/h]	0	0	0	0	0	0	0	0	0	0	0	0
Total Hourly Volume [veh/h]	33	848	114	99	857	18	14	208	49	70	94	31
Peak Hour Factor	1.0000	1.0000	1.0000	1.0000	1.0000	1.0000	1.0000	1.0000	1.0000	1.0000	1.0000	1.0000
Other Adjustment Factor	1.0000	1.0000	1.0000	1.0000	1.0000	1.0000	1.0000	1.0000	1.0000	1.0000	1.0000	1.0000
Total 15-Minute Volume [veh/h]	8	212	29	25	214	5	4	52	12	18	24	8
Total Analysis Volume [veh/h]	33	848	114	99	857	18	14	208	49	70	94	31
Pedestrian Volume [ped/h]	0			0			0			0		
Bicycle Volume [bicycles/h]	0			0			0			0		

Intersection Settings

Cycle Length [s]	100
Lost time [s]	10.00

Phasing & Timing

Control Type	Protecte	Permiss	Permiss	Protecte	Permiss	Permiss	Permiss	Permiss	Permiss	Permiss	Permiss	Permiss
Signal group	5	2	0	1	6	0	0	8	0	0	4	0
Auxiliary Signal Groups												
Lead / Lag	Lead	-	-	Lead	-	-	-	-	-	-	-	-

Movement, Approach, & Intersection Results

V/C, Movement V/C Ratio	0.02	0.27	0.07	0.06	0.27	0.01	0.01	0.14	0.03	0.04	0.10	0.02
Intersection LOS	B											
Intersection V/C	0.609											

Intersection Level Of Service Report
Intersection 26: Vincent Avenue (NS) at Workman Avenue (EW)

Control Type:	Signalized	Delay (sec / veh):	-
Analysis Method:	ICU 1	Level Of Service:	B
Analysis Period:	15 minutes	Volume to Capacity (v/c):	0.691

Intersection Setup

Name	Vincent Avenue			Vincent Avenue			Workman Avenue			Workman Avenue		
Approach	Northbound			Southbound			Eastbound			Westbound		
Lane Configuration												
Turning Movement	Left	Thru	Right	Left	Thru	Right	Left	Thru	Right	Left	Thru	Right
Lane Width [ft]	12.00	12.00	12.00	12.00	12.00	12.00	12.00	12.00	12.00	12.00	12.00	12.00
No. of Lanes in Pocket	1	0	0	1	0	0	0	0	0	0	0	0
Pocket Length [ft]	120.00	100.00	100.00	180.00	100.00	100.00	100.00	100.00	100.00	100.00	100.00	100.00
Speed [mph]	35.00			40.00			35.00			35.00		
Grade [%]	0.00			0.00			0.00			0.00		
Crosswalk	Yes			Yes			Yes			Yes		

Volumes

Name	Vincent Avenue			Vincent Avenue			Workman Avenue			Workman Avenue		
Base Volume Input [veh/h]	91	947	198	81	856	24	17	257	64	108	143	47
Base Volume Adjustment Factor	1.0000	1.0000	1.0000	1.0000	1.0000	1.0000	1.0000	1.0000	1.0000	1.0000	1.0000	1.0000
Heavy Vehicles Percentage [%]	2.00	2.00	2.00	2.00	2.00	2.00	2.00	2.00	2.00	2.00	2.00	2.00
Growth Rate	1.01	1.01	1.01	1.01	1.01	1.01	1.01	1.01	1.01	1.01	1.01	1.01
In-Process Volume [veh/h]	0	0	0	0	0	0	0	0	0	0	0	0
Site-Generated Trips [veh/h]	0	0	0	0	0	0	0	0	0	0	0	0
Diverted Trips [veh/h]	0	0	0	0	0	0	0	0	0	0	0	0
Pass-by Trips [veh/h]	0	0	0	0	0	0	0	0	0	0	0	0
Existing Site Adjustment Volume [veh/h]	0	0	0	0	0	0	0	0	0	0	0	0
Other Volume [veh/h]	0	0	0	0	0	0	0	0	0	0	0	0
Total Hourly Volume [veh/h]	92	956	200	82	865	24	17	260	65	109	144	47
Peak Hour Factor	1.0000	1.0000	1.0000	1.0000	1.0000	1.0000	1.0000	1.0000	1.0000	1.0000	1.0000	1.0000
Other Adjustment Factor	1.0000	1.0000	1.0000	1.0000	1.0000	1.0000	1.0000	1.0000	1.0000	1.0000	1.0000	1.0000
Total 15-Minute Volume [veh/h]	23	239	50	21	216	6	4	65	16	27	36	12
Total Analysis Volume [veh/h]	92	956	200	82	865	24	17	260	65	109	144	47
Pedestrian Volume [ped/h]	0			0			0			0		
Bicycle Volume [bicycles/h]	0			0			0			0		

Intersection Settings

Cycle Length [s]	100
Lost time [s]	10.00

Phasing & Timing

Control Type	Protecte	Permiss	Permiss	Protecte	Permiss	Permiss	Permiss	Permiss	Permiss	Permiss	Permiss	Permiss
Signal group	5	2	0	1	6	0	0	8	0	0	4	0
Auxiliary Signal Groups												
Lead / Lag	Lead	-	-	Lead	-	-	-	-	-	-	-	-

Movement, Approach, & Intersection Results

V/C, Movement V/C Ratio	0.06	0.30	0.13	0.05	0.27	0.02	0.01	0.17	0.04	0.07	0.16	0.03
Intersection LOS	B											
Intersection V/C	0.691											

Intersection Level Of Service Report
Intersection 27: Vincent Avenue (NS) at I-10 WB Ramps (EW)

Control Type:	Signalized	Delay (sec / veh):	-
Analysis Method:	ICU 1	Level Of Service:	A
Analysis Period:	15 minutes	Volume to Capacity (v/c):	0.450

Intersection Setup

Name	Vincent Avenue		Vincent Avenue		I-10 WB Ramps	
Approach	Northbound		Southbound		Westbound	
Lane Configuration						
Turning Movement	Thru	Right	Left	Thru	Left	Right
Lane Width [ft]	12.00	12.00	12.00	12.00	12.00	12.00
No. of Lanes in Pocket	0	0	0	0	0	1
Pocket Length [ft]	100.00	100.00	100.00	100.00	100.00	220.00
Speed [mph]	35.00		35.00		35.00	
Grade [%]	0.00		0.00		0.00	
Crosswalk	No		No		Yes	

Volumes

Name	Vincent Avenue		Vincent Avenue		I-10 WB Ramps	
Base Volume Input [veh/h]	1060	0	0	1075	393	194
Base Volume Adjustment Factor	1.0000	1.0000	1.0000	1.0000	1.0000	1.0000
Heavy Vehicles Percentage [%]	2.00	2.00	2.00	2.00	2.00	2.00
Growth Rate	1.01	1.00	1.00	1.01	1.01	1.01
In-Process Volume [veh/h]	0	0	0	0	0	0
Site-Generated Trips [veh/h]	0	0	0	0	0	0
Diverted Trips [veh/h]	0	0	0	0	0	0
Pass-by Trips [veh/h]	0	0	0	0	0	0
Existing Site Adjustment Volume [veh/h]	0	0	0	0	0	0
Other Volume [veh/h]	0	0	0	0	0	0
Total Hourly Volume [veh/h]	1071	0	0	1086	397	196
Peak Hour Factor	1.0000	1.0000	1.0000	1.0000	1.0000	1.0000
Other Adjustment Factor	1.0000	1.0000	1.0000	1.0000	1.0000	1.0000
Total 15-Minute Volume [veh/h]	268	0	0	272	99	49
Total Analysis Volume [veh/h]	1071	0	0	1086	397	196
Pedestrian Volume [ped/h]	0		0		0	
Bicycle Volume [bicycles/h]	0		0		0	

Intersection Settings

Cycle Length [s]	100
Lost time [s]	10.00

Phasing & Timing

Control Type	Permissive	Permissive	Permissive	Permissive	Split	Split
Signal group	2	0	0	6	7	0
Auxiliary Signal Groups						
Lead / Lag	-	-	-	-	Lead	-

Movement, Approach, & Intersection Results

V/C, Movement V/C Ratio	0.22	0.00	0.00	0.23	0.12	0.12
Intersection LOS	A					
Intersection V/C	0.450					

Intersection Level Of Service Report
Intersection 28: Vincent Avenue (NS) at I-10 EB Ramps (EW)

Control Type:	Signalized	Delay (sec / veh):	-
Analysis Method:	ICU 1	Level Of Service:	A
Analysis Period:	15 minutes	Volume to Capacity (v/c):	0.541

Intersection Setup

Name	Vincent Avenue			Vincent Avenue			I-10 EB Ramps			I-10 EB Ramps		
Approach	Northbound			Southbound			Eastbound			Westbound		
Lane Configuration												
Turning Movement	Left	Thru	Right	Left	Thru	Right	Left	Thru	Right	Left	Thru	Right
Lane Width [ft]	12.00	12.00	12.00	12.00	12.00	12.00	12.00	12.00	12.00	12.00	12.00	12.00
No. of Lanes in Pocket	0	0	0	0	0	0	0	0	0	0	0	0
Pocket Length [ft]	100.00	100.00	100.00	100.00	100.00	100.00	100.00	100.00	100.00	100.00	100.00	100.00
Speed [mph]	35.00			35.00			35.00			35.00		
Grade [%]	0.00			0.00			0.00			0.00		
Crosswalk	No			No			Yes			Yes		

Volumes

Name	Vincent Avenue			Vincent Avenue			I-10 EB Ramps			I-10 EB Ramps		
Base Volume Input [veh/h]	0	903	711	0	1381	340	160	0	129	0	0	0
Base Volume Adjustment Factor	1.0000	1.0000	1.0000	1.0000	1.0000	1.0000	1.0000	1.0000	1.0000	1.0000	1.0000	1.0000
Heavy Vehicles Percentage [%]	2.00	2.00	2.00	2.00	2.00	2.00	2.00	2.00	2.00	2.00	2.00	2.00
Growth Rate	1.00	1.01	1.01	1.00	1.01	1.01	1.01	1.00	1.01	1.00	1.00	1.00
In-Process Volume [veh/h]	0	0	0	0	0	0	0	0	0	0	0	0
Site-Generated Trips [veh/h]	0	0	0	0	0	0	0	0	0	0	0	0
Diverted Trips [veh/h]	0	0	0	0	0	0	0	0	0	0	0	0
Pass-by Trips [veh/h]	0	0	0	0	0	0	0	0	0	0	0	0
Existing Site Adjustment Volume [veh/h]	0	0	0	0	0	0	0	0	0	0	0	0
Other Volume [veh/h]	0	0	0	0	0	0	0	0	0	0	0	0
Total Hourly Volume [veh/h]	0	912	718	0	1395	343	162	0	130	0	0	0
Peak Hour Factor	1.0000	1.0000	1.0000	1.0000	1.0000	1.0000	1.0000	1.0000	1.0000	1.0000	1.0000	1.0000
Other Adjustment Factor	1.0000	1.0000	1.0000	1.0000	1.0000	1.0000	1.0000	1.0000	1.0000	1.0000	1.0000	1.0000
Total 15-Minute Volume [veh/h]	0	228	180	0	349	86	41	0	33	0	0	0
Total Analysis Volume [veh/h]	0	912	718	0	1395	343	162	0	130	0	0	0
Pedestrian Volume [ped/h]	0			0			0			0		
Bicycle Volume [bicycles/h]	0			0			0			0		

Intersection Settings

Cycle Length [s]	100
Lost time [s]	10.00

Phasing & Timing

Control Type	Permiss	Permiss	Permiss	Permiss	Permiss	Permiss	Split	Permiss	Split	Permiss	Permiss	Permiss
Signal group	0	2	0	0	6	0	3	0	0	0	0	0
Auxiliary Signal Groups												
Lead / Lag	-	-	-	-	-	-	Lead	-	-	-	-	-

Movement, Approach, & Intersection Results

V/C, Movement V/C Ratio	0.00	0.34	0.34	0.00	0.29	0.21	0.10	0.00	0.04	0.00	0.00	0.00
Intersection LOS	A											
Intersection V/C	0.541											

Intersection Level Of Service Report

Intersection 29: Vernon Ave/Lark Ellen Ave (NS) at Gladstone Street (EW)

Control Type:	Signalized	Delay (sec / veh):	-
Analysis Method:	ICU 1	Level Of Service:	C
Analysis Period:	15 minutes	Volume to Capacity (v/c):	0.732

Intersection Setup

Name	Lark Ellen Avenue			Vernon Avenue			Gladstone Street			Gladstone Street		
Approach	Northbound			Southbound			Eastbound			Westbound		
Lane Configuration												
Turning Movement	Left	Thru	Right	Left	Thru	Right	Left	Thru	Right	Left	Thru	Right
Lane Width [ft]	12.00	12.00	12.00	12.00	12.00	12.00	12.00	12.00	12.00	12.00	12.00	12.00
No. of Lanes in Pocket	1	0	0	1	0	0	1	0	0	1	0	0
Pocket Length [ft]	60.00	100.00	100.00	60.00	100.00	100.00	70.00	100.00	100.00	60.00	100.00	100.00
Speed [mph]	35.00			35.00			45.00			45.00		
Grade [%]	0.00			0.00			0.00			0.00		
Crosswalk	Yes			Yes			Yes			Yes		

Volumes

Name	Lark Ellen Avenue			Vernon Avenue			Gladstone Street			Gladstone Street		
Base Volume Input [veh/h]	41	335	161	42	424	62	167	992	74	92	238	29
Base Volume Adjustment Factor	1.0000	1.0000	1.0000	1.0000	1.0000	1.0000	1.0000	1.0000	1.0000	1.0000	1.0000	1.0000
Heavy Vehicles Percentage [%]	2.00	2.00	2.00	2.00	2.00	2.00	2.00	2.00	2.00	2.00	2.00	2.00
Growth Rate	1.01	1.01	1.01	1.01	1.01	1.01	1.01	1.01	1.01	1.01	1.01	1.01
In-Process Volume [veh/h]	0	0	0	0	0	0	0	0	0	0	0	0
Site-Generated Trips [veh/h]	0	0	0	0	0	0	0	0	0	0	0	0
Diverted Trips [veh/h]	0	0	0	0	0	0	0	0	0	0	0	0
Pass-by Trips [veh/h]	0	0	0	0	0	0	0	0	0	0	0	0
Existing Site Adjustment Volume [veh/h]	0	0	0	0	0	0	0	0	0	0	0	0
Other Volume [veh/h]	0	0	0	0	0	0	0	0	0	0	0	0
Total Hourly Volume [veh/h]	41	338	163	42	428	63	169	1002	75	93	240	29
Peak Hour Factor	1.0000	1.0000	1.0000	1.0000	1.0000	1.0000	1.0000	1.0000	1.0000	1.0000	1.0000	1.0000
Other Adjustment Factor	1.0000	1.0000	1.0000	1.0000	1.0000	1.0000	1.0000	1.0000	1.0000	1.0000	1.0000	1.0000
Total 15-Minute Volume [veh/h]	10	85	41	11	107	16	42	251	19	23	60	7
Total Analysis Volume [veh/h]	41	338	163	42	428	63	169	1002	75	93	240	29
Pedestrian Volume [ped/h]	0			0			0			0		
Bicycle Volume [bicycles/h]	0			0			0			0		

Intersection Settings

Cycle Length [s]	100
Lost time [s]	10.00

Phasing & Timing

Control Type	Permiss	Permiss	Permiss	Permiss	Permiss	Permiss	Permiss	Permiss	Permiss	Permiss	Permiss	Permiss
Signal group	0	2	0	0	6	0	0	8	0	0	4	0
Auxiliary Signal Groups												
Lead / Lag	-	-	-	-	-	-	-	-	-	-	-	-

Movement, Approach, & Intersection Results

V/C, Movement V/C Ratio	0.03	0.21	0.10	0.03	0.15	0.15	0.11	0.34	0.34	0.06	0.08	0.08
Intersection LOS	C											
Intersection V/C	0.732											

Intersection Level Of Service Report
Intersection 30: Azusa Avenue (NS) at I-210 EB Ramps (EW)

Control Type:	Signalized	Delay (sec / veh):	-
Analysis Method:	ICU 1	Level Of Service:	B
Analysis Period:	15 minutes	Volume to Capacity (v/c):	0.659

Intersection Setup

Name	Azusa Avenue		Azusa Avenue		I-210 EB Ramps	
Approach	Northbound		Southbound		Eastbound	
Lane Configuration						
Turning Movement	Left	Thru	Thru	Right	Left	Right
Lane Width [ft]	12.00	12.00	12.00	12.00	12.00	12.00
No. of Lanes in Pocket	0	0	0	0	0	0
Pocket Length [ft]	100.00	100.00	100.00	100.00	100.00	100.00
Speed [mph]	35.00		35.00		35.00	
Grade [%]	0.00		0.00		0.00	
Crosswalk	No		No		Yes	

Volumes

Name	Azusa Avenue		Azusa Avenue		I-210 EB Ramps	
Base Volume Input [veh/h]	0	1131	795	0	131	321
Base Volume Adjustment Factor	1.0000	1.0000	1.0000	1.0000	1.0000	1.0000
Heavy Vehicles Percentage [%]	2.00	2.00	2.00	2.00	2.00	2.00
Growth Rate	1.00	1.01	1.01	1.00	1.01	1.01
In-Process Volume [veh/h]	0	0	0	0	0	0
Site-Generated Trips [veh/h]	0	0	0	0	0	0
Diverted Trips [veh/h]	0	0	0	0	0	0
Pass-by Trips [veh/h]	0	0	0	0	0	0
Existing Site Adjustment Volume [veh/h]	0	0	0	0	0	0
Other Volume [veh/h]	0	0	0	0	0	0
Total Hourly Volume [veh/h]	0	1142	803	0	132	324
Peak Hour Factor	1.0000	1.0000	1.0000	1.0000	1.0000	1.0000
Other Adjustment Factor	1.0000	1.0000	1.0000	1.0000	1.0000	1.0000
Total 15-Minute Volume [veh/h]	0	286	201	0	33	81
Total Analysis Volume [veh/h]	0	1142	803	0	132	324
Pedestrian Volume [ped/h]	0		0		0	
Bicycle Volume [bicycles/h]	0		0		0	

Intersection Settings

Cycle Length [s]	100
Lost time [s]	10.00

Phasing & Timing

Control Type	Permissive	Permissive	Permissive	Permissive	Split	Split
Signal group	0	2	6	0	3	0
Auxiliary Signal Groups						
Lead / Lag	-	-	-	-	Lead	-

Movement, Approach, & Intersection Results

V/C, Movement V/C Ratio	0.00	0.36	0.25	0.00	0.04	0.20
Intersection LOS	B					
Intersection V/C	0.659					

Intersection Level Of Service Report

Intersection 31: Azusa Avenue (NS) at Paramount Street (EW)

Control Type:	Signalized	Delay (sec / veh):	-
Analysis Method:	ICU 1	Level Of Service:	B
Analysis Period:	15 minutes	Volume to Capacity (v/c):	0.636

Intersection Setup

Name	Azusa Avenue			Azusa Avenue			Paramount Street			Paramount Street		
Approach	Northbound			Southbound			Eastbound			Westbound		
Lane Configuration												
Turning Movement	Left	Thru	Right	Left	Thru	Right	Left	Thru	Right	Left	Thru	Right
Lane Width [ft]	12.00	12.00	12.00	12.00	12.00	12.00	12.00	12.00	12.00	12.00	12.00	12.00
No. of Lanes in Pocket	1	0	0	1	0	0	0	0	0	0	0	0
Pocket Length [ft]	200.00	100.00	100.00	110.00	100.00	100.00	100.00	100.00	100.00	100.00	100.00	100.00
Speed [mph]	35.00			35.00			25.00			15.00		
Grade [%]	0.00			0.00			0.00			0.00		
Crosswalk	No			Yes			Yes			Yes		

Volumes

Name	Azusa Avenue			Azusa Avenue			Paramount Street			Paramount Street		
Base Volume Input [veh/h]	91	923	4	27	966	51	170	1	87	17	7	36
Base Volume Adjustment Factor	1.0000	1.0000	1.0000	1.0000	1.0000	1.0000	1.0000	1.0000	1.0000	1.0000	1.0000	1.0000
Heavy Vehicles Percentage [%]	2.00	2.00	2.00	2.00	2.00	2.00	2.00	2.00	2.00	2.00	2.00	2.00
Growth Rate	1.01	1.01	1.01	1.01	1.01	1.01	1.01	1.01	1.01	1.01	1.01	1.01
In-Process Volume [veh/h]	0	0	0	0	0	0	0	0	0	0	0	0
Site-Generated Trips [veh/h]	0	0	0	0	0	0	0	0	0	0	0	0
Diverted Trips [veh/h]	0	0	0	0	0	0	0	0	0	0	0	0
Pass-by Trips [veh/h]	0	0	0	0	0	0	0	0	0	0	0	0
Existing Site Adjustment Volume [veh/h]	0	0	0	0	0	0	0	0	0	0	0	0
Other Volume [veh/h]	0	0	0	0	0	0	0	0	0	0	0	0
Total Hourly Volume [veh/h]	92	932	4	27	976	52	172	1	88	17	7	36
Peak Hour Factor	1.0000	1.0000	1.0000	1.0000	1.0000	1.0000	1.0000	1.0000	1.0000	1.0000	1.0000	1.0000
Other Adjustment Factor	1.0000	1.0000	1.0000	1.0000	1.0000	1.0000	1.0000	1.0000	1.0000	1.0000	1.0000	1.0000
Total 15-Minute Volume [veh/h]	23	233	1	7	244	13	43	0	22	4	2	9
Total Analysis Volume [veh/h]	92	932	4	27	976	52	172	1	88	17	7	36
Pedestrian Volume [ped/h]	0			0			0			0		
Bicycle Volume [bicycles/h]	0			0			0			0		

Intersection Settings

Cycle Length [s]	100
Lost time [s]	10.00

Phasing & Timing

Control Type	Permiss	Permiss	Permiss	Permiss	Permiss	Permiss	Permiss	Permiss	Permiss	Permiss	Permiss	Permiss
Signal group	0	2	0	0	6	0	0	8	0	0	4	0
Auxiliary Signal Groups												
Lead / Lag	-	-	-	-	-	-	-	-	-	-	-	-

Movement, Approach, & Intersection Results

V/C, Movement V/C Ratio	0.06	0.29	0.00	0.02	0.31	0.03	0.11	0.16	0.16	0.01	0.04	0.04
Intersection LOS	B											
Intersection V/C	0.636											

Intersection Level Of Service Report
Intersection 32: Azusa Avenue (NS) at Gladstone Street (EW)

Control Type:	Signalized	Delay (sec / veh):	-
Analysis Method:	ICU 1	Level Of Service:	C
Analysis Period:	15 minutes	Volume to Capacity (v/c):	0.737

Intersection Setup

Name	Azusa Avenue			Azusa Avenue			Gladstone Street			Gladstone Street		
Approach	Northbound			Southbound			Eastbound			Westbound		
Lane Configuration												
Turning Movement	Left	Thru	Right	Left	Thru	Right	Left	Thru	Right	Left	Thru	Right
Lane Width [ft]	12.00	12.00	12.00	12.00	12.00	12.00	12.00	12.00	12.00	12.00	12.00	12.00
No. of Lanes in Pocket	1	0	1	2	0	0	1	0	0	1	0	0
Pocket Length [ft]	190.00	100.00	190.00	190.00	100.00	100.00	150.00	100.00	100.00	150.00	100.00	100.00
Speed [mph]	35.00			35.00			40.00			40.00		
Grade [%]	0.00			0.00			0.00			0.00		
Crosswalk	Yes			Yes			Yes			Yes		

Volumes

Name	Azusa Avenue			Azusa Avenue			Gladstone Street			Gladstone Street		
Base Volume Input [veh/h]	79	668	150	214	716	57	212	762	79	122	287	73
Base Volume Adjustment Factor	1.0000	1.0000	1.0000	1.0000	1.0000	1.0000	1.0000	1.0000	1.0000	1.0000	1.0000	1.0000
Heavy Vehicles Percentage [%]	2.00	2.00	2.00	2.00	2.00	2.00	2.00	2.00	2.00	2.00	2.00	2.00
Growth Rate	1.01	1.01	1.01	1.01	1.01	1.01	1.01	1.01	1.01	1.01	1.01	1.01
In-Process Volume [veh/h]	0	0	0	0	0	0	0	0	0	0	0	0
Site-Generated Trips [veh/h]	0	0	0	0	0	0	0	0	0	0	0	0
Diverted Trips [veh/h]	0	0	0	0	0	0	0	0	0	0	0	0
Pass-by Trips [veh/h]	0	0	0	0	0	0	0	0	0	0	0	0
Existing Site Adjustment Volume [veh/h]	0	0	0	0	0	0	0	0	0	0	0	0
Other Volume [veh/h]	0	0	0	0	0	0	0	0	0	0	0	0
Total Hourly Volume [veh/h]	80	675	152	216	723	58	214	770	80	123	290	74
Peak Hour Factor	1.0000	1.0000	1.0000	1.0000	1.0000	1.0000	1.0000	1.0000	1.0000	1.0000	1.0000	1.0000
Other Adjustment Factor	1.0000	1.0000	1.0000	1.0000	1.0000	1.0000	1.0000	1.0000	1.0000	1.0000	1.0000	1.0000
Total 15-Minute Volume [veh/h]	20	169	38	54	181	15	54	193	20	31	73	19
Total Analysis Volume [veh/h]	80	675	152	216	723	58	214	770	80	123	290	74
Pedestrian Volume [ped/h]	0			0			0			0		
Bicycle Volume [bicycles/h]	0			0			0			0		

Intersection Settings

Cycle Length [s]	100
Lost time [s]	10.00

Phasing & Timing

Control Type	Protecte	Permiss	Overlap	Protecte	Permiss	Permiss	Protecte	Permiss	Permiss	Protecte	Permiss	Permiss
Signal group	5	2	2	1	6	0	3	8	0	7	4	0
Auxiliary Signal Groups			2,7									
Lead / Lag	Lead	-	-	Lead	-	-	Lead	-	-	Lead	-	-

Movement, Approach, & Intersection Results

V/C, Movement V/C Ratio	0.05	0.21	0.02	0.07	0.24	0.24	0.13	0.27	0.27	0.08	0.11	0.11
Intersection LOS	C											
Intersection V/C	0.737											

Intersection Level Of Service Report
Intersection 33: San Gabriel Ave/Azusa Ave (NS) at 1st St (EW)

Control Type:	Signalized	Delay (sec / veh):	-
Analysis Method:	ICU 1	Level Of Service:	B
Analysis Period:	15 minutes	Volume to Capacity (v/c):	0.669

Intersection Setup

Name												
Approach	Northbound			Southbound			Eastbound			Westbound		
Lane Configuration												
Turning Movement	Left	Thru	Right	Left	Thru	Right	Left	Thru	Right	Left	Thru	Right
Lane Width [ft]	12.00	12.00	12.00	12.00	12.00	12.00	12.00	12.00	12.00	12.00	12.00	12.00
No. of Lanes in Pocket	0	0	0	0	0	0	0	0	0	0	0	0
Pocket Length [ft]	100.00	100.00	100.00	100.00	100.00	100.00	100.00	100.00	100.00	100.00	100.00	100.00
Speed [mph]	35.00			35.00			35.00			35.00		
Grade [%]	0.00			0.00			0.00			0.00		
Crosswalk	No			Yes			Yes			Yes		

Volumes

Name												
Base Volume Input [veh/h]	78	505	330	117	837	20	72	175	85	288	164	148
Base Volume Adjustment Factor	1.0000	1.0000	1.0000	1.0000	1.0000	1.0000	1.0000	1.0000	1.0000	1.0000	1.0000	1.0000
Heavy Vehicles Percentage [%]	2.00	2.00	2.00	2.00	2.00	2.00	2.00	2.00	2.00	2.00	2.00	2.00
Growth Rate	1.06	1.06	1.06	1.06	1.06	1.06	1.06	1.06	1.06	1.06	1.06	1.06
In-Process Volume [veh/h]	0	0	0	0	0	0	0	0	0	0	0	0
Site-Generated Trips [veh/h]	0	0	0	0	0	0	0	0	0	0	0	0
Diverted Trips [veh/h]	0	0	0	0	0	0	0	0	0	0	0	0
Pass-by Trips [veh/h]	0	0	0	0	0	0	0	0	0	0	0	0
Existing Site Adjustment Volume [veh/h]	0	0	0	0	0	0	0	0	0	0	0	0
Other Volume [veh/h]	0	0	0	0	0	0	0	0	0	0	0	0
Total Hourly Volume [veh/h]	83	535	350	124	887	21	76	186	90	305	174	157
Peak Hour Factor	0.9690	0.9690	0.9690	0.9690	0.9690	0.9690	0.9690	0.9690	0.9690	0.9690	0.9690	0.9690
Other Adjustment Factor	1.0000	1.0000	1.0000	1.0000	1.0000	1.0000	1.0000	1.0000	1.0000	1.0000	1.0000	1.0000
Total 15-Minute Volume [veh/h]	21	138	90	32	229	5	20	48	23	79	45	41
Total Analysis Volume [veh/h]	86	552	361	128	915	22	78	192	93	315	180	162
Pedestrian Volume [ped/h]	0			0			0			0		
Bicycle Volume [bicycles/h]	0			0			0			0		

Intersection Settings

Cycle Length [s]	100
Lost time [s]	10.00

Phasing & Timing

Control Type	Protecte	Permiss	Permiss	Protecte	Permiss	Permiss	Protecte	Permiss	Permiss	Protecte	Permiss	Permiss
Signal group	5	2	0	1	6	0	3	8	0	7	4	0
Auxiliary Signal Groups												
Lead / Lag	Lead	-	-	Lead	-	-	Lead	-	-	Lead	-	-

Movement, Approach, & Intersection Results

V/C, Movement V/C Ratio	0.05	0.17	0.23	0.08	0.29	0.01	0.05	0.12	0.06	0.10	0.11	0.11
Intersection LOS	B											
Intersection V/C	0.669											

Intersection Level Of Service Report
Intersection 34: Alameda Ave/I-210 WB Ramps (NS) at 1st St (EW)

Control Type:	Signalized	Delay (sec / veh):	-
Analysis Method:	ICU 1	Level Of Service:	B
Analysis Period:	15 minutes	Volume to Capacity (v/c):	0.699

Intersection Setup

Name												
Approach	Northbound			Southbound			Eastbound			Westbound		
Lane Configuration												
Turning Movement	Left	Thru	Right	Left	Thru	Right	Left	Thru	Right	Left	Thru	Right
Lane Width [ft]	12.00	12.00	12.00	12.00	12.00	12.00	12.00	12.00	12.00	12.00	12.00	12.00
No. of Lanes in Pocket	1	0	0	1	0	1	1	0	1	1	0	1
Pocket Length [ft]	325.00	100.00	100.00	50.00	100.00	150.00	55.00	100.00	100.00	100.00	100.00	110.00
Speed [mph]	35.00			35.00			35.00			35.00		
Grade [%]	0.00			0.00			0.00			0.00		
Crosswalk	Yes			Yes			Yes			Yes		

Volumes

Name												
Base Volume Input [veh/h]	366	87	94	46	24	38	20	604	207	177	305	43
Base Volume Adjustment Factor	1.0000	1.0000	1.0000	1.0000	1.0000	1.0000	1.0000	1.0000	1.0000	1.0000	1.0000	1.0000
Heavy Vehicles Percentage [%]	2.00	2.00	2.00	2.00	2.00	2.00	2.00	2.00	2.00	2.00	2.00	2.00
Growth Rate	1.02	1.02	1.02	1.02	1.02	1.02	1.02	1.02	1.02	1.02	1.02	1.02
In-Process Volume [veh/h]	0	0	0	0	0	0	0	0	0	0	0	0
Site-Generated Trips [veh/h]	0	0	0	0	0	0	0	0	0	0	0	0
Diverted Trips [veh/h]	0	0	0	0	0	0	0	0	0	0	0	0
Pass-by Trips [veh/h]	0	0	0	0	0	0	0	0	0	0	0	0
Existing Site Adjustment Volume [veh/h]	0	0	0	0	0	0	0	0	0	0	0	0
Other Volume [veh/h]	0	0	0	0	0	0	0	0	0	0	0	0
Total Hourly Volume [veh/h]	373	89	96	47	24	39	20	616	211	181	311	44
Peak Hour Factor	0.9400	0.9400	0.9400	0.9400	0.9400	0.9400	0.9400	0.9400	0.9400	0.9400	0.9400	0.9400
Other Adjustment Factor	1.0000	1.0000	1.0000	1.0000	1.0000	1.0000	1.0000	1.0000	1.0000	1.0000	1.0000	1.0000
Total 15-Minute Volume [veh/h]	99	24	26	13	6	10	5	164	56	48	83	12
Total Analysis Volume [veh/h]	397	95	102	50	26	41	21	655	224	193	331	47
Pedestrian Volume [ped/h]	0			0			0			0		
Bicycle Volume [bicycles/h]	0			0			0			0		

Intersection Settings

Cycle Length [s]	100
Lost time [s]	10.00

Phasing & Timing

Control Type	Permiss	Permiss	Permiss	Permiss	Permiss	Permiss	Permiss	Permiss	Permiss	Permiss	Permiss	Permiss
Signal group	0	2	0	0	6	0	0	8	0	0	4	0
Auxiliary Signal Groups												
Lead / Lag	-	-	-	-	-	-	-	-	-	-	-	-

Movement, Approach, & Intersection Results

V/C, Movement V/C Ratio	0.25	0.12	0.12	0.03	0.02	0.03	0.01	0.20	0.14	0.12	0.21	0.03
Intersection LOS	B											
Intersection V/C	0.699											

FUTURE BASELINE WITH PROJECT

Vincent Avenue Industrial Building

Vistro File: G:\...\AMC.vistro
Report File: G:\...\FBP AM.pdf

Scenario 2 Future Baseline With Project
5/6/2020

Intersection Analysis Summary

ID	Intersection Name	Control Type	Method	Worst Mvmt	V/C	Delay (s/veh)	LOS
1	I-605 SB On Ramp (NS) at Live Oak Avenue (EW)	Signalized	ICU 1	WB Thru	0.526	-	A
2	I-605 NB Ramps (NS) at Live Oak Avenue (EW)	Two-way stop	HCM 6th Edition	SB Right	1.005	75.7	F
3	Graham Road (NS) at Live Oak Avenue (EW)	Signalized	ICU 1	WB Thru	0.573	-	A
4	Rivergrade Road (NS) at Live Oak Avenue (EW)	Signalized	ICU 1	WB Thru	0.619	-	B
5	Stewart Avenue (NS) at Live Oak Avenue (EW)	Signalized	ICU 1	WB Thru	0.815	-	D
6	Baldwin Park Boulevard (NS) at Live Oak Avenue (EW)	Signalized	ICU 1	WB Thru	0.547	-	A
7	Arrow Highway (NS) at Live Oak Ave/Arrow Hwy (EW)	Signalized	ICU 1	WB Thru	0.637	-	B
8	Maine Avenue (NS) at Arrow Highway (EW)	Signalized	ICU 1	WB Thru	0.798	-	C
9	Santa Fe Dam/Azusa Canyon Road (NS) at Arrow Highway (EW)	Signalized	ICU 1	WB Thru	0.934	-	E
10	4th Street (NS) at Arrow Highway (EW)	Signalized	ICU 1	EB Thru	0.374	-	A
11	Irwindale Avenue (NS) at I-210 WB Ramps (EW)	Signalized	ICU 1	SB Thru	0.463	-	A
12	Irwindale Avenue (NS) at I-210 EB Ramps (EW)	Signalized	ICU 1	NB Thru	0.687	-	B
13	Irwindale Avenue (NS) at Jardin De Roca/Irwindale Rd (EW)	Signalized	ICU 1	SB Thru	0.572	-	A
14	Irwindale Avenue (NS) at 1st Street (EW)	Signalized	ICU 1	NB Right	0.509	-	A
15	Irwindale Avenue (NS) at Gladstone Street (EW)	Signalized	ICU 1	WB Left	0.671	-	B
16	Irwindale Avenue (NS) at Arrow Highway (EW)	Signalized	ICU 1	WB Thru	0.853	-	D
17	Vincent Avenue (NS) at	Signalized	ICU 1	WB Thru	0.533		A

17	Gladstone Street (EW)	Signalized	ICU 1	WB Thru	0.555	-	A
18	Vincent Avenue (NS) at Arrow Highway (EW)	Signalized	ICU 1	WB Thru	0.746	-	C
19	Vincent Avenue (NS) at Project North Driveway (EW)	Two-way stop	HCM 6th Edition	EB Left	0.061	14.7	B
20	Vincent Avenue (NS) at Project South Driveway (EW)	Two-way stop	HCM 6th Edition	EB Left	0.043	12.8	B
21	Vincent Avenue (NS) at Cypress Street (EW)	Signalized	ICU 1	WB Right	0.658	-	B
22	Vincent Avenue (NS) at San Bernardino Road (EW)	Signalized	ICU 1	WB Thru	0.659	-	B
23	Vincent Avenue (NS) at Badillo Street (EW)	Signalized	ICU 1	WB Thru	0.620	-	B
24	Vincent Avenue (NS) at Puente Avenue (EW)	Signalized	ICU 1	NB Thru	0.599	-	A
25	Vincent Avenue (NS) at Rowland Avenue (EW)	Signalized	ICU 1	SB Thru	0.545	-	A
26	Vincent Avenue (NS) at Workman Avenue (EW)	Signalized	ICU 1	SB Thru	0.617	-	B
27	Vincent Avenue (NS) at I-10 WB Ramps (EW)	Signalized	ICU 1	SB Thru	0.458	-	A
28	Vincent Avenue (NS) at I-10 EB Ramps (EW)	Signalized	ICU 1	NB Thru	0.496	-	A
29	Vernon Ave/Lark Ellen Ave (NS) at Gladstone Street (EW)	Signalized	ICU 1	WB Thru	0.711	-	C
30	Azusa Avenue (NS) at I-210 EB Ramps (EW)	Signalized	ICU 1	NB Thru	0.667	-	B
31	Azusa Avenue (NS) at Paramount Street (EW)	Signalized	ICU 1	NB Thru	0.611	-	B
32	Azusa Avenue (NS) at Gladstone Street (EW)	Signalized	ICU 1	WB Thru	0.760	-	C
33	San Gabriel Ave/Azusa Ave (NS) at 1st St (EW)	Signalized	ICU 1	SB Thru	0.696	-	B
34	Alameda Ave/I-210 WB Ramps NS) at 1st St (EW)	Signalized	ICU 1	WB Left	0.952	-	E

V/C, Delay, LOS: For two-way stop, these values are taken from the movement with the worst (highest) delay value. For all other control types, they are taken for the whole intersection.

Intersection Level Of Service Report
Intersection 1: I-605 SB On Ramp (NS) at Live Oak Avenue (EW)

Control Type:	Signalized	Delay (sec / veh):	-
Analysis Method:	ICU 1	Level Of Service:	A
Analysis Period:	15 minutes	Volume to Capacity (v/c):	0.526

Intersection Setup

Name	I-605 SB On Ramps				Live Oak Avenue	
Approach	Northbound		Eastbound		Westbound	
Lane Configuration						
Turning Movement	Left	Right	Thru	Right	Left	Thru
Lane Width [ft]	12.00	12.00	12.00	12.00	12.00	12.00
No. of Lanes in Pocket	0	0	0	0	1	0
Pocket Length [ft]	100.00	100.00	100.00	100.00	365.00	100.00
Speed [mph]	35.00		35.00		45.00	
Grade [%]	0.00		0.00		0.00	
Crosswalk	Yes		No		No	

Volumes

Name	I-605 SB On Ramps				Live Oak Avenue	
Base Volume Input [veh/h]	0	0	280	347	521	1094
Base Volume Adjustment Factor	1.0000	1.0000	1.0000	0.0000	1.0000	1.0000
Heavy Vehicles Percentage [%]	2.00	2.00	2.00	2.00	2.00	2.00
Growth Rate	1.00	1.00	1.01	1.01	1.01	1.01
In-Process Volume [veh/h]	0	0	0	0	0	0
Site-Generated Trips [veh/h]	0	0	0	0	14	0
Diverted Trips [veh/h]	0	0	0	0	0	0
Pass-by Trips [veh/h]	0	0	0	0	0	0
Existing Site Adjustment Volume [veh/h]	0	0	0	0	0	0
Other Volume [veh/h]	0	0	0	0	0	0
Total Hourly Volume [veh/h]	0	0	283	0	540	1105
Peak Hour Factor	1.0000	1.0000	1.0000	1.0000	1.0000	1.0000
Other Adjustment Factor	1.0000	1.0000	1.0000	0.0000	1.0000	1.0000
Total 15-Minute Volume [veh/h]	0	0	71	0	135	276
Total Analysis Volume [veh/h]	0	0	283	0	540	1105
Pedestrian Volume [ped/h]	0		0		0	
Bicycle Volume [bicycles/h]	0		0		0	

Intersection Settings

Cycle Length [s]	100
Lost time [s]	10.00

Phasing & Timing

Control Type	Permissive	Permissive	Permissive	Permissive	Protected	Permissive
Signal group	0	0	2	0	1	6
Auxiliary Signal Groups						
Lead / Lag	-	-	-	-	Lead	-

Movement, Approach, & Intersection Results

V/C, Movement V/C Ratio	0.00	0.00	0.09	0.00	0.34	0.35
Intersection LOS	A					
Intersection V/C	0.526					

Intersection Level Of Service Report
Intersection 2: I-605 NB Ramps (NS) at Live Oak Avenue (EW)

Control Type:	Two-way stop	Delay (sec / veh):	75.7
Analysis Method:	HCM 6th Edition	Level Of Service:	F
Analysis Period:	15 minutes	Volume to Capacity (v/c):	1.005

Intersection Setup

Name	I-605 NB Ramps			I-605 NB Ramps			Live Oak Avenue			Live Oak Avenue		
Approach	Northbound			Southbound			Eastbound			Westbound		
Lane Configuration												
Turning Movement	Left	Thru	Right	Left	Thru	Right	Left	Thru	Right	Left	Thru	Right
Lane Width [ft]	12.00	12.00	12.00	12.00	12.00	12.00	12.00	12.00	12.00	12.00	12.00	12.00
No. of Lanes in Pocket	0	0	0	0	0	0	0	0	0	0	0	0
Pocket Length [ft]	100.00	100.00	100.00	100.00	100.00	100.00	100.00	100.00	100.00	100.00	100.00	100.00
Speed [mph]	35.00			35.00			45.00			45.00		
Grade [%]	0.00			0.00			0.00			0.00		
Crosswalk	Yes			Yes			No			No		

Volumes

Name	I-605 NB Ramps			I-605 NB Ramps			Live Oak Avenue			Live Oak Avenue		
Base Volume Input [veh/h]	0	0	469	0	0	432	0	262	0	0	1205	0
Base Volume Adjustment Factor	1.0000	1.0000	1.0000	1.0000	1.0000	1.0000	1.0000	1.0000	1.0000	1.0000	1.0000	1.0000
Heavy Vehicles Percentage [%]	2.00	2.00	2.00	2.00	2.00	2.00	2.00	2.00	2.00	2.00	2.00	2.00
Growth Rate	1.00	1.00	1.01	1.00	1.00	1.01	1.00	1.01	1.00	1.00	1.01	1.00
In-Process Volume [veh/h]	0	0	0	0	0	0	0	0	0	0	0	0
Site-Generated Trips [veh/h]	0	0	105	0	0	0	0	0	0	0	14	0
Diverted Trips [veh/h]	0	0	0	0	0	0	0	0	0	0	0	0
Pass-by Trips [veh/h]	0	0	0	0	0	0	0	0	0	0	0	0
Existing Site Adjustment Volume [veh/h]	0	0	0	0	0	0	0	0	0	0	0	0
Other Volume [veh/h]	0	0	0	0	0	0	0	0	0	0	0	0
Total Hourly Volume [veh/h]	0	0	579	0	0	436	0	265	0	0	1231	0
Peak Hour Factor	1.0000	1.0000	1.0000	1.0000	1.0000	1.0000	1.0000	1.0000	1.0000	1.0000	1.0000	1.0000
Other Adjustment Factor	1.0000	1.0000	1.0000	1.0000	1.0000	1.0000	1.0000	1.0000	1.0000	1.0000	1.0000	1.0000
Total 15-Minute Volume [veh/h]	0	0	145	0	0	109	0	66	0	0	308	0
Total Analysis Volume [veh/h]	0	0	579	0	0	436	0	265	0	0	1231	0
Pedestrian Volume [ped/h]	0			0			0			0		

Intersection Settings

Priority Scheme	Stop	Stop	Free	Free
Flared Lane				
Storage Area [veh]	0	0	0	0
Two-Stage Gap Acceptance	No	No		
Number of Storage Spaces in Median	0	0	0	0

Movement, Approach, & Intersection Results

V/C, Movement V/C Ratio	0.00	0.00	0.65	0.00	0.00	1.01	0.00	0.00	0.00	0.00	0.01	0.00
d_M, Delay for Movement [s/veh]	0.00	0.00	16.17	0.00	0.00	75.71	0.00	0.00	0.00	0.00	0.00	0.00
Movement LOS			C			F		A			A	
95th-Percentile Queue Length [veh/ln]	0.00	0.00	4.93	0.00	0.00	12.92	0.00	0.00	0.00	0.00	0.00	0.00
95th-Percentile Queue Length [ft/ln]	0.00	0.00	123.13	0.00	0.00	323.11	0.00	0.00	0.00	0.00	0.00	0.00
d_A, Approach Delay [s/veh]	16.17			75.71			0.00			0.00		
Approach LOS	C			F			A			A		
d_I, Intersection Delay [s/veh]	16.87											
Intersection LOS	F											

Intersection Level Of Service Report
Intersection 3: Graham Road (NS) at Live Oak Avenue (EW)

Control Type:	Signalized	Delay (sec / veh):	-
Analysis Method:	ICU 1	Level Of Service:	A
Analysis Period:	15 minutes	Volume to Capacity (v/c):	0.573

Intersection Setup

Name	Graham Road		Live Oak Avenue		Live Oak Avenue	
Approach	Northbound		Eastbound		Westbound	
Lane Configuration						
Turning Movement	Left	Right	Thru	Right	Left	Thru
Lane Width [ft]	12.00	12.00	12.00	12.00	12.00	12.00
No. of Lanes in Pocket	0	0	0	0	1	0
Pocket Length [ft]	100.00	100.00	100.00	100.00	205.00	100.00
Speed [mph]	35.00		45.00		45.00	
Grade [%]	0.00		0.00		0.00	
Crosswalk	Yes		No		Yes	

Volumes

Name	Graham Road		Live Oak Avenue		Live Oak Avenue	
Base Volume Input [veh/h]	38	39	578	28	14	1334
Base Volume Adjustment Factor	1.0000	1.0000	1.0000	1.0000	1.0000	1.0000
Heavy Vehicles Percentage [%]	2.00	2.00	2.00	2.00	2.00	2.00
Growth Rate	1.01	1.01	1.01	1.01	1.01	1.01
In-Process Volume [veh/h]	0	0	0	0	0	0
Site-Generated Trips [veh/h]	0	0	105	0	0	14
Diverted Trips [veh/h]	0	0	0	0	0	0
Pass-by Trips [veh/h]	0	0	0	0	0	0
Existing Site Adjustment Volume [veh/h]	0	0	0	0	0	0
Other Volume [veh/h]	0	0	0	0	0	0
Total Hourly Volume [veh/h]	38	39	689	28	14	1361
Peak Hour Factor	1.0000	1.0000	1.0000	1.0000	1.0000	1.0000
Other Adjustment Factor	1.0000	1.0000	1.0000	1.0000	1.0000	1.0000
Total 15-Minute Volume [veh/h]	10	10	172	7	4	340
Total Analysis Volume [veh/h]	38	39	689	28	14	1361
Pedestrian Volume [ped/h]	0		0		0	
Bicycle Volume [bicycles/h]	0		0		0	

Intersection Settings

Cycle Length [s]	100
Lost time [s]	10.00

Phasing & Timing

Control Type	Permissive	Permissive	Permissive	Permissive	Protected	Permissive
Signal group	5	0	8	0	7	4
Auxiliary Signal Groups						
Lead / Lag	Lead	-	-	-	Lead	-

Movement, Approach, & Intersection Results

V/C, Movement V/C Ratio	0.02	0.05	0.22	0.02	0.01	0.43
Intersection LOS	A					
Intersection V/C	0.573					

Intersection Level Of Service Report
Intersection 4: Rivergrade Road (NS) at Live Oak Avenue (EW)

Control Type:	Signalized	Delay (sec / veh):	-
Analysis Method:	ICU 1	Level Of Service:	B
Analysis Period:	15 minutes	Volume to Capacity (v/c):	0.619

Intersection Setup

Name	Rivergrade Raod			Rivergrade Road			Live Oak Avenue			Live Oak Avenue		
Approach	Northbound			Southbound			Eastbound			Westbound		
Lane Configuration												
Turning Movement	Left	Thru	Right	Left	Thru	Right	Left	Thru	Right	Left	Thru	Right
Lane Width [ft]	12.00	12.00	12.00	12.00	12.00	12.00	12.00	12.00	12.00	12.00	12.00	12.00
No. of Lanes in Pocket	1	0	0	1	0	1	1	0	0	1	0	1
Pocket Length [ft]	315.00	100.00	100.00	160.00	100.00	145.00	205.00	100.00	100.00	155.00	100.00	120.00
Speed [mph]	50.00			40.00			45.00			45.00		
Grade [%]	0.00			0.00			0.00			0.00		
Crosswalk	Yes			Yes			Yes			Yes		

Volumes

Name	Rivergrade Raod			Rivergrade Road			Live Oak Avenue			Live Oak Avenue		
Base Volume Input [veh/h]	52	67	138	24	311	58	71	587	77	268	983	22
Base Volume Adjustment Factor	1.0000	1.0000	1.0000	1.0000	1.0000	1.0000	1.0000	1.0000	1.0000	1.0000	1.0000	1.0000
Heavy Vehicles Percentage [%]	2.00	2.00	2.00	2.00	2.00	2.00	2.00	2.00	2.00	2.00	2.00	2.00
Growth Rate	1.01	1.01	1.01	1.01	1.01	1.01	1.01	1.01	1.01	1.01	1.01	1.01
In-Process Volume [veh/h]	0	0	0	0	0	0	0	0	0	0	0	0
Site-Generated Trips [veh/h]	0	0	0	0	0	0	0	105	0	0	14	0
Diverted Trips [veh/h]	0	0	0	0	0	0	0	0	0	0	0	0
Pass-by Trips [veh/h]	0	0	0	0	0	0	0	0	0	0	0	0
Existing Site Adjustment Volume [veh/h]	0	0	0	0	0	0	0	0	0	0	0	0
Other Volume [veh/h]	0	0	0	0	0	0	0	0	0	0	0	0
Total Hourly Volume [veh/h]	53	68	139	24	314	59	72	698	78	271	1007	22
Peak Hour Factor	1.0000	1.0000	1.0000	1.0000	1.0000	1.0000	1.0000	1.0000	1.0000	1.0000	1.0000	1.0000
Other Adjustment Factor	1.0000	1.0000	1.0000	1.0000	1.0000	1.0000	1.0000	1.0000	1.0000	1.0000	1.0000	1.0000
Total 15-Minute Volume [veh/h]	13	17	35	6	79	15	18	175	20	68	252	6
Total Analysis Volume [veh/h]	53	68	139	24	314	59	72	698	78	271	1007	22
Pedestrian Volume [ped/h]	0			0			0			0		
Bicycle Volume [bicycles/h]	0			0			0			0		

Intersection Settings

Cycle Length [s]	100
Lost time [s]	10.00

Phasing & Timing

Control Type	Protecte	Permiss	Overlap	Protecte	Permiss	Permiss	Protecte	Permiss	Permiss	Protecte	Permiss	Permiss
Signal group	5	2	2	1	6	0	3	8	0	7	4	0
Auxiliary Signal Groups			2,7									
Lead / Lag	Lead	-	-	Lead	-	-	Lead	-	-	Lead	-	-

Movement, Approach, & Intersection Results

V/C, Movement V/C Ratio	0.03	0.04	0.00	0.02	0.10	0.04	0.05	0.22	0.05	0.17	0.31	0.01
Intersection LOS	B											
Intersection V/C	0.619											

Intersection Level Of Service Report
Intersection 5: Stewart Avenue (NS) at Live Oak Avenue (EW)

Control Type:	Signalized	Delay (sec / veh):	-
Analysis Method:	ICU 1	Level Of Service:	D
Analysis Period:	15 minutes	Volume to Capacity (v/c):	0.815

Intersection Setup

Name	Stewart Avenue			Stewart Avenue			Live Oak Avenue			Live Oak Avenue		
Approach	Northbound			Southbound			Eastbound			Westbound		
Lane Configuration												
Turning Movement	Left	Thru	Right	Left	Thru	Right	Left	Thru	Right	Left	Thru	Right
Lane Width [ft]	12.00	12.00	12.00	12.00	12.00	12.00	12.00	12.00	12.00	12.00	12.00	12.00
No. of Lanes in Pocket	0	0	0	1	0	0	1	0	0	1	0	0
Pocket Length [ft]	100.00	100.00	100.00	100.00	100.00	100.00	165.00	100.00	100.00	100.00	100.00	100.00
Speed [mph]	30.00			30.00			45.00			45.00		
Grade [%]	0.00			0.00			0.00			0.00		
Crosswalk	Yes			Yes			No			Yes		

Volumes

Name	Stewart Avenue			Stewart Avenue			Live Oak Avenue			Live Oak Avenue		
Base Volume Input [veh/h]	239	112	28	10	35	49	12	609	25	23	1450	26
Base Volume Adjustment Factor	1.0000	1.0000	1.0000	1.0000	1.0000	1.0000	1.0000	1.0000	1.0000	1.0000	1.0000	1.0000
Heavy Vehicles Percentage [%]	2.00	2.00	2.00	2.00	2.00	2.00	2.00	2.00	2.00	2.00	2.00	2.00
Growth Rate	1.01	1.01	1.01	1.01	1.01	1.01	1.01	1.01	1.01	1.01	1.01	1.01
In-Process Volume [veh/h]	0	0	0	0	0	0	0	0	0	0	0	0
Site-Generated Trips [veh/h]	0	0	0	0	0	0	0	105	0	0	14	0
Diverted Trips [veh/h]	0	0	0	0	0	0	0	0	0	0	0	0
Pass-by Trips [veh/h]	0	0	0	0	0	0	0	0	0	0	0	0
Existing Site Adjustment Volume [veh/h]	0	0	0	0	0	0	0	0	0	0	0	0
Other Volume [veh/h]	0	0	0	0	0	0	0	0	0	0	0	0
Total Hourly Volume [veh/h]	241	113	28	10	35	49	12	720	25	23	1479	26
Peak Hour Factor	1.0000	1.0000	1.0000	1.0000	1.0000	1.0000	1.0000	1.0000	1.0000	1.0000	1.0000	1.0000
Other Adjustment Factor	1.0000	1.0000	1.0000	1.0000	1.0000	1.0000	1.0000	1.0000	1.0000	1.0000	1.0000	1.0000
Total 15-Minute Volume [veh/h]	60	28	7	3	9	12	3	180	6	6	370	7
Total Analysis Volume [veh/h]	241	113	28	10	35	49	12	720	25	23	1479	26
Pedestrian Volume [ped/h]	0			0			0			0		
Bicycle Volume [bicycles/h]	0			0			0			0		

Intersection Settings

Cycle Length [s]	100
Lost time [s]	10.00

Phasing & Timing

Control Type	Permiss	Permiss	Permiss	Permiss	Permiss	Permiss	Permiss	Permiss	Permiss	Permiss	Permiss	Permiss
Signal group	0	2	0	0	6	0	0	8	0	0	4	0
Auxiliary Signal Groups												
Lead / Lag	-	-	-	-	-	-	-	-	-	-	-	-

Movement, Approach, & Intersection Results

V/C, Movement V/C Ratio	0.15	0.24	0.24	0.01	0.02	0.03	0.01	0.23	0.02	0.01	0.46	0.02
Intersection LOS	D											
Intersection V/C	0.815											

Intersection Level Of Service Report
Intersection 6: Baldwin Park Boulevard (NS) at Live Oak Avenue (EW)

Control Type:	Signalized	Delay (sec / veh):	-
Analysis Method:	ICU 1	Level Of Service:	A
Analysis Period:	15 minutes	Volume to Capacity (v/c):	0.547

Intersection Setup

Name	Baldwin Park Boulevard						Live Oak Avenue			Live Oak Avenue		
Approach	Northbound			Southbound			Eastbound			Westbound		
Lane Configuration												
Turning Movement	Left	Thru	Right	Left	Thru	Right	Left	Thru	Right	Left	Thru	Right
Lane Width [ft]	12.00	12.00	12.00	12.00	12.00	12.00	12.00	12.00	12.00	12.00	12.00	12.00
No. of Lanes in Pocket	1	0	0	0	0	0	0	0	0	1	0	0
Pocket Length [ft]	100.00	100.00	100.00	100.00	100.00	100.00	100.00	100.00	100.00	200.00	100.00	100.00
Speed [mph]	40.00			35.00			45.00			45.00		
Grade [%]	0.00			0.00			0.00			0.00		
Crosswalk	Yes			Yes			No			No		

Volumes

Name	Baldwin Park Boulevard						Live Oak Avenue			Live Oak Avenue		
Base Volume Input [veh/h]	311	0	237	0	0	0	0	581	89	143	1056	0
Base Volume Adjustment Factor	1.0000	1.0000	1.0000	1.0000	1.0000	1.0000	1.0000	1.0000	1.0000	1.0000	1.0000	1.0000
Heavy Vehicles Percentage [%]	2.00	2.00	2.00	2.00	2.00	2.00	2.00	2.00	2.00	2.00	2.00	2.00
Growth Rate	1.01	1.01	1.01	1.01	1.01	1.01	1.01	1.01	1.01	1.01	1.01	1.01
In-Process Volume [veh/h]	0	0	0	0	0	0	0	0	0	0	0	0
Site-Generated Trips [veh/h]	0	0	8	0	0	0	0	105	0	1	14	0
Diverted Trips [veh/h]	0	0	0	0	0	0	0	0	0	0	0	0
Pass-by Trips [veh/h]	0	0	0	0	0	0	0	0	0	0	0	0
Existing Site Adjustment Volume [veh/h]	0	0	0	0	0	0	0	0	0	0	0	0
Other Volume [veh/h]	0	0	0	0	0	0	0	0	0	0	0	0
Total Hourly Volume [veh/h]	314	0	247	0	0	0	0	692	90	145	1081	0
Peak Hour Factor	1.0000	1.0000	1.0000	1.0000	1.0000	1.0000	1.0000	1.0000	1.0000	1.0000	1.0000	1.0000
Other Adjustment Factor	1.0000	1.0000	1.0000	1.0000	1.0000	1.0000	1.0000	1.0000	1.0000	1.0000	1.0000	1.0000
Total 15-Minute Volume [veh/h]	79	0	62	0	0	0	0	173	23	36	270	0
Total Analysis Volume [veh/h]	314	0	247	0	0	0	0	692	90	145	1081	0
Pedestrian Volume [ped/h]	0			0			0			0		
Bicycle Volume [bicycles/h]	0			0			0			0		

Intersection Settings

Cycle Length [s]	100
Lost time [s]	10.00

Phasing & Timing

Control Type	Permiss	Permiss	Permiss	Permiss	Permiss	Permiss	Permiss	Permiss	Permiss	Protecte	Permiss	Permiss
Signal group	5	0	0	0	0	0	0	8	0	7	4	0
Auxiliary Signal Groups												
Lead / Lag	Lead	-	-	-	-	-	-	-	-	Lead	-	-

Movement, Approach, & Intersection Results

V/C, Movement V/C Ratio	0.10	0.00	0.00	0.00	0.00	0.00	0.00	0.22	0.06	0.09	0.34	0.00
Intersection LOS	A											
Intersection V/C	0.547											

Intersection Level Of Service Report
Intersection 7: Arrow Highway (NS) at Live Oak Ave/Arrow Hwy (EW)

Control Type:	Signalized	Delay (sec / veh):	-
Analysis Method:	ICU 1	Level Of Service:	B
Analysis Period:	15 minutes	Volume to Capacity (v/c):	0.637

Intersection Setup

Name			Live Oak Avenue		Arrow Highway	
Approach	Southbound		Eastbound		Westbound	
Lane Configuration						
Turning Movement	Left	Right	Left	Thru	Thru	Right
Lane Width [ft]	12.00	12.00	12.00	12.00	12.00	12.00
No. of Lanes in Pocket	0	0	1	0	0	0
Pocket Length [ft]	100.00	100.00	160.00	100.00	100.00	100.00
Speed [mph]	35.00		45.00		45.00	
Grade [%]	0.00		0.00		0.00	
Crosswalk	No		Yes		No	

Volumes

Name			Live Oak Avenue		Arrow Highway	
Base Volume Input [veh/h]	296	59	113	634	1117	1772
Base Volume Adjustment Factor	1.0000	1.0000	1.0000	1.0000	1.0000	1.0000
Heavy Vehicles Percentage [%]	2.00	2.00	2.00	2.00	2.00	2.00
Growth Rate	1.01	1.01	1.01	1.01	1.01	1.00
In-Process Volume [veh/h]	0	0	0	0	0	0
Site-Generated Trips [veh/h]	13	0	0	113	15	2
Diverted Trips [veh/h]	0	0	0	0	0	0
Pass-by Trips [veh/h]	0	0	0	0	0	0
Existing Site Adjustment Volume [veh/h]	0	0	0	0	0	0
Other Volume [veh/h]	0	0	0	0	0	0
Total Hourly Volume [veh/h]	312	60	114	753	1143	1774
Peak Hour Factor	1.0000	1.0000	1.0000	1.0000	1.0000	1.0000
Other Adjustment Factor	1.0000	1.0000	1.0000	1.0000	1.0000	1.0000
Total 15-Minute Volume [veh/h]	78	15	29	188	286	444
Total Analysis Volume [veh/h]	312	60	114	753	1143	1774
Pedestrian Volume [ped/h]	0		0		0	
Bicycle Volume [bicycles/h]	0		0		0	

Intersection Settings

Cycle Length [s]	100
Lost time [s]	10.00

Phasing & Timing

Control Type	Permissive	Permissive	Permissive	Permissive	Permissive	Unsignalized
Signal group	1	0	0	8	4	0
Auxiliary Signal Groups						
Lead / Lag	Lead	-	-	-	-	-

Movement, Approach, & Intersection Results

V/C, Movement V/C Ratio	0.10	0.04	0.07	0.24	0.36	0.00
Intersection LOS	B					
Intersection V/C	0.637					

Intersection Level Of Service Report
Intersection 8: Maine Avenue (NS) at Arrow Highway (EW)

Control Type:	Signalized	Delay (sec / veh):	-
Analysis Method:	ICU 1	Level Of Service:	C
Analysis Period:	15 minutes	Volume to Capacity (v/c):	0.798

Intersection Setup

Name	Maine Avenue		Arrow Highway		Arrow Highway	
Approach	Northbound		Eastbound		Westbound	
Lane Configuration						
Turning Movement	Left	Right	Thru	Right	Left	Thru
Lane Width [ft]	12.00	12.00	12.00	12.00	12.00	12.00
No. of Lanes in Pocket	0	1	0	0	1	0
Pocket Length [ft]	100.00	50.00	100.00	100.00	80.00	100.00
Speed [mph]	35.00		45.00		45.00	
Grade [%]	0.00		0.00		0.00	
Crosswalk	Yes		No		Yes	

Volumes

Name	Maine Avenue		Arrow Highway		Arrow Highway	
Base Volume Input [veh/h]	606	96	869	172	61	2288
Base Volume Adjustment Factor	1.0000	1.0000	1.0000	1.0000	1.0000	1.0000
Heavy Vehicles Percentage [%]	2.00	2.00	2.00	2.00	2.00	2.00
Growth Rate	1.01	1.01	1.01	1.01	1.01	1.01
In-Process Volume [veh/h]	0	0	0	0	0	0
Site-Generated Trips [veh/h]	0	0	126	0	0	17
Diverted Trips [veh/h]	0	0	0	0	0	0
Pass-by Trips [veh/h]	0	0	0	0	0	0
Existing Site Adjustment Volume [veh/h]	0	0	0	0	0	0
Other Volume [veh/h]	0	0	0	0	0	0
Total Hourly Volume [veh/h]	612	97	1004	174	62	2328
Peak Hour Factor	1.0000	1.0000	1.0000	1.0000	1.0000	1.0000
Other Adjustment Factor	1.0000	1.0000	1.0000	1.0000	1.0000	1.0000
Total 15-Minute Volume [veh/h]	153	24	251	44	16	582
Total Analysis Volume [veh/h]	612	97	1004	174	62	2328
Pedestrian Volume [ped/h]	0		0		0	
Bicycle Volume [bicycles/h]	0		0		0	

Intersection Settings

Cycle Length [s]	100
Lost time [s]	10.00

Phasing & Timing

Control Type	Split	Split	Permissive	Permissive	Permissive	Permissive
Signal group	5	0	8	0	0	4
Auxiliary Signal Groups						
Lead / Lag	Lead	-	-	-	-	-

Movement, Approach, & Intersection Results

V/C, Movement V/C Ratio	0.19	0.06	0.31	0.11	0.04	0.49
Intersection LOS	C					
Intersection V/C	0.798					

Intersection Level Of Service Report

Intersection 9: Santa Fe Dam/Azusa Canyon Road (NS) at Arrow Highway (EW)

Control Type:	Signalized	Delay (sec / veh):	-
Analysis Method:	ICU 1	Level Of Service:	E
Analysis Period:	15 minutes	Volume to Capacity (v/c):	0.934

Intersection Setup

Name	Azusa Canyon Road						Arrow Highway			Arrow Highway		
Approach	Northbound			Southbound			Eastbound			Westbound		
Lane Configuration												
Turning Movement	Left	Thru	Right	Left	Thru	Right	Left	Thru	Right	Left	Thru	Right
Lane Width [ft]	12.00	12.00	12.00	12.00	12.00	12.00	12.00	12.00	12.00	12.00	12.00	12.00
No. of Lanes in Pocket	1	0	0	0	0	0	1	0	0	1	0	0
Pocket Length [ft]	200.00	100.00	100.00	100.00	100.00	100.00	185.00	100.00	100.00	180.00	100.00	100.00
Speed [mph]	35.00			35.00			45.00			45.00		
Grade [%]	0.00			0.00			0.00			0.00		
Crosswalk	Yes			Yes			No			Yes		

Volumes

Name	Azusa Canyon Road						Arrow Highway			Arrow Highway		
Base Volume Input [veh/h]	837	14	145	11	3	12	19	624	122	67	1708	23
Base Volume Adjustment Factor	1.0000	1.0000	1.0000	1.0000	1.0000	1.0000	1.0000	1.0000	1.0000	1.0000	1.0000	1.0000
Heavy Vehicles Percentage [%]	2.00	2.00	2.00	2.00	2.00	2.00	2.00	2.00	2.00	2.00	2.00	2.00
Growth Rate	1.01	1.00	1.01	1.00	1.00	1.00	1.00	1.01	1.01	1.01	1.01	1.00
In-Process Volume [veh/h]	0	0	0	0	0	0	0	0	0	0	0	0
Site-Generated Trips [veh/h]	0	0	8	0	0	0	0	126	0	1	17	0
Diverted Trips [veh/h]	0	0	0	0	0	0	0	0	0	0	0	0
Pass-by Trips [veh/h]	0	0	0	0	0	0	0	0	0	0	0	0
Existing Site Adjustment Volume [veh/h]	0	0	0	0	0	0	0	0	0	0	0	0
Other Volume [veh/h]	0	0	0	0	0	0	0	0	0	0	0	0
Total Hourly Volume [veh/h]	845	14	154	11	3	12	19	756	123	69	1742	23
Peak Hour Factor	1.0000	1.0000	1.0000	1.0000	1.0000	1.0000	1.0000	1.0000	1.0000	1.0000	1.0000	1.0000
Other Adjustment Factor	1.0000	1.0000	1.0000	1.0000	1.0000	1.0000	1.0000	1.0000	1.0000	1.0000	1.0000	1.0000
Total 15-Minute Volume [veh/h]	211	4	39	3	1	3	5	189	31	17	436	6
Total Analysis Volume [veh/h]	845	14	154	11	3	12	19	756	123	69	1742	23
Pedestrian Volume [ped/h]	0			0			0			0		
Bicycle Volume [bicycles/h]	0			0			0			0		

Intersection Settings

Cycle Length [s]	100
Lost time [s]	10.00

Phasing & Timing

Control Type	Split	Split	Split	Split	Split	Split	Protecte	Permiss	Permiss	Protecte	Permiss	Permiss
Signal group	0	2	0	0	6	0	3	8	0	7	4	0
Auxiliary Signal Groups												
Lead / Lag	-	-	-	-	-	-	Lead	-	-	Lead	-	-

Movement, Approach, & Intersection Results

V/C, Movement V/C Ratio	0.26	0.27	0.10	0.01	0.01	0.01	0.01	0.24	0.08	0.04	0.54	0.01
Intersection LOS	E											
Intersection V/C	0.934											

Intersection Level Of Service Report
Intersection 10: 4th Street (NS) at Arrow Highway (EW)

Control Type:	Signalized	Delay (sec / veh):	-
Analysis Method:	ICU 1	Level Of Service:	A
Analysis Period:	15 minutes	Volume to Capacity (v/c):	0.374

Intersection Setup

Name	4th Street			4th Street			Arrow Highway			Arrow Highway		
Approach	Northbound			Southbound			Eastbound			Westbound		
Lane Configuration												
Turning Movement	Left	Thru	Right	Left	Thru	Right	Left	Thru	Right	Left	Thru	Right
Lane Width [ft]	12.00	12.00	12.00	12.00	12.00	12.00	12.00	12.00	12.00	12.00	12.00	12.00
No. of Lanes in Pocket	1	0	0	0	0	0	1	0	1	1	0	0
Pocket Length [ft]	55.00	100.00	100.00	100.00	100.00	100.00	145.00	100.00	150.00	195.00	100.00	100.00
Speed [mph]	35.00			25.00			45.00			45.00		
Grade [%]	0.00			0.00			0.00			0.00		
Crosswalk	Yes			Yes			Yes			Yes		

Volumes

Name	4th Street			4th Street			Arrow Highway			Arrow Highway		
Base Volume Input [veh/h]	76	1	22	3	2	12	20	769	126	77	0	0
Base Volume Adjustment Factor	1.0000	1.0000	1.0000	1.0000	1.0000	1.0000	1.0000	1.0000	1.0000	1.0000	1.0000	1.0000
Heavy Vehicles Percentage [%]	2.00	2.00	2.00	2.00	2.00	2.00	2.00	2.00	2.00	2.00	2.00	2.00
Growth Rate	1.01	1.01	1.01	1.01	1.01	1.01	1.01	1.01	1.01	1.01	1.01	1.01
In-Process Volume [veh/h]	0	0	0	0	0	0	0	0	0	0	0	0
Site-Generated Trips [veh/h]	0	0	0	0	0	0	0	134	0	0	18	0
Diverted Trips [veh/h]	0	0	0	0	0	0	0	0	0	0	0	0
Pass-by Trips [veh/h]	0	0	0	0	0	0	0	0	0	0	0	0
Existing Site Adjustment Volume [veh/h]	0	0	0	0	0	0	0	0	0	0	0	0
Other Volume [veh/h]	0	0	0	0	0	0	0	0	0	0	0	0
Total Hourly Volume [veh/h]	77	1	22	3	2	12	20	911	127	78	18	0
Peak Hour Factor	1.0000	1.0000	1.0000	1.0000	1.0000	1.0000	1.0000	1.0000	1.0000	1.0000	1.0000	1.0000
Other Adjustment Factor	1.0000	1.0000	1.0000	1.0000	1.0000	1.0000	1.0000	1.0000	1.0000	1.0000	1.0000	1.0000
Total 15-Minute Volume [veh/h]	19	0	6	1	1	3	5	228	32	20	5	0
Total Analysis Volume [veh/h]	77	1	22	3	2	12	20	911	127	78	18	0
Pedestrian Volume [ped/h]	0			0			0			0		
Bicycle Volume [bicycles/h]	0			0			0			0		

Intersection Settings

Cycle Length [s]	100
Lost time [s]	10.00

Phasing & Timing

Control Type	Split	Split	Split	Split	Split	Split	Protecte	Permiss	Permiss	Protecte	Permiss	Permiss
Signal group	0	2	0	0	6	0	3	8	0	7	4	0
Auxiliary Signal Groups												
Lead / Lag	-	-	-	-	-	-	Lead	-	-	Lead	-	-

Movement, Approach, & Intersection Results

V/C, Movement V/C Ratio	0.02	0.02	0.01	0.00	0.01	0.01	0.01	0.19	0.08	0.05	0.01	0.00
Intersection LOS	A											
Intersection V/C	0.374											

Intersection Level Of Service Report
Intersection 11: Irwindale Avenue (NS) at I-210 WB Ramps (EW)

Control Type:	Signalized	Delay (sec / veh):	-
Analysis Method:	ICU 1	Level Of Service:	A
Analysis Period:	15 minutes	Volume to Capacity (v/c):	0.463

Intersection Setup

Name	Irwindale Avenue				I-210 WB Ramps	
Approach	Northbound		Southbound		Westbound	
Lane Configuration						
Turning Movement	Thru	Right	Left	Thru	Left	Right
Lane Width [ft]	12.00	12.00	12.00	12.00	12.00	12.00
No. of Lanes in Pocket	0	0	0	0	0	0
Pocket Length [ft]	100.00	100.00	100.00	100.00	100.00	100.00
Speed [mph]	35.00		35.00		35.00	
Grade [%]	0.00		0.00		0.00	
Crosswalk	No		No		Yes	

Volumes

Name	Irwindale Avenue				I-210 WB Ramps	
Base Volume Input [veh/h]	826	0	0	1049	281	169
Base Volume Adjustment Factor	1.0000	1.0000	1.0000	1.0000	1.0000	1.0000
Heavy Vehicles Percentage [%]	2.00	2.00	2.00	2.00	2.00	2.00
Growth Rate	1.01	1.00	1.00	1.01	1.01	1.01
In-Process Volume [veh/h]	0	0	0	0	0	0
Site-Generated Trips [veh/h]	0	0	0	0	0	0
Diverted Trips [veh/h]	0	0	0	0	0	0
Pass-by Trips [veh/h]	0	0	0	0	0	0
Existing Site Adjustment Volume [veh/h]	0	0	0	0	0	0
Other Volume [veh/h]	0	0	0	0	0	0
Total Hourly Volume [veh/h]	834	0	0	1059	284	171
Peak Hour Factor	1.0000	1.0000	1.0000	1.0000	1.0000	1.0000
Other Adjustment Factor	1.0000	1.0000	1.0000	1.0000	1.0000	1.0000
Total 15-Minute Volume [veh/h]	209	0	0	265	71	43
Total Analysis Volume [veh/h]	834	0	0	1059	284	171
Pedestrian Volume [ped/h]	0		0		0	
Bicycle Volume [bicycles/h]	0		0		0	

Intersection Settings

Cycle Length [s]	100
Lost time [s]	10.00

Phasing & Timing

Control Type	Permissive	Permissive	Permissive	Permissive	Split	Split
Signal group	2	0	0	6	7	0
Auxiliary Signal Groups						
Lead / Lag	-	-	-	-	Lead	-

Movement, Approach, & Intersection Results

V/C, Movement V/C Ratio	0.17	0.00	0.00	0.22	0.09	0.14
Intersection LOS	A					
Intersection V/C	0.463					

Intersection Level Of Service Report
Intersection 12: Irwindale Avenue (NS) at I-210 EB Ramps (EW)

Control Type:	Signalized	Delay (sec / veh):	-
Analysis Method:	ICU 1	Level Of Service:	B
Analysis Period:	15 minutes	Volume to Capacity (v/c):	0.687

Intersection Setup

Name	Irwindale Avenue			Irwindale Avenue			I-210 EB Ramps			I-210 EB Ramps		
Approach	Northbound			Southbound			Eastbound			Westbound		
Lane Configuration												
Turning Movement	Left	Thru	Right	Left	Thru	Right	Left	Thru	Right	Left	Thru	Right
Lane Width [ft]	12.00	12.00	12.00	12.00	12.00	12.00	12.00	12.00	12.00	12.00	12.00	12.00
No. of Lanes in Pocket	0	0	1	1	0	0	0	0	0	0	0	0
Pocket Length [ft]	100.00	100.00	505.00	330.00	100.00	100.00	100.00	100.00	100.00	100.00	100.00	100.00
Speed [mph]	35.00			35.00			35.00			35.00		
Grade [%]	0.00			0.00			0.00			0.00		
Crosswalk	No			No			No			Yes		

Volumes

Name	Irwindale Avenue			Irwindale Avenue			I-210 EB Ramps			I-210 EB Ramps		
Base Volume Input [veh/h]	0	829	235	167	595	0	444	0	748	0	0	0
Base Volume Adjustment Factor	1.0000	1.0000	1.0000	1.0000	1.0000	1.0000	1.0000	1.0000	1.0000	1.0000	1.0000	1.0000
Heavy Vehicles Percentage [%]	2.00	2.00	2.00	2.00	2.00	2.00	2.00	2.00	2.00	2.00	2.00	2.00
Growth Rate	1.00	1.01	1.01	1.01	1.01	1.00	1.01	1.00	1.01	1.00	1.00	1.00
In-Process Volume [veh/h]	0	0	0	0	0	0	0	0	0	0	0	0
Site-Generated Trips [veh/h]	0	8	0	0	0	0	0	0	64	0	0	0
Diverted Trips [veh/h]	0	0	0	0	0	0	0	0	0	0	0	0
Pass-by Trips [veh/h]	0	0	0	0	0	0	0	0	0	0	0	0
Existing Site Adjustment Volume [veh/h]	0	0	0	0	0	0	0	0	0	0	0	0
Other Volume [veh/h]	0	0	0	0	0	0	0	0	0	0	0	0
Total Hourly Volume [veh/h]	0	845	237	169	601	0	448	0	819	0	0	0
Peak Hour Factor	1.0000	1.0000	1.0000	1.0000	1.0000	1.0000	1.0000	1.0000	1.0000	1.0000	1.0000	1.0000
Other Adjustment Factor	1.0000	1.0000	1.0000	1.0000	1.0000	1.0000	1.0000	1.0000	1.0000	1.0000	1.0000	1.0000
Total 15-Minute Volume [veh/h]	0	211	59	42	150	0	112	0	205	0	0	0
Total Analysis Volume [veh/h]	0	845	237	169	601	0	448	0	819	0	0	0
Pedestrian Volume [ped/h]	0			0			0			0		
Bicycle Volume [bicycles/h]	0			0			0			0		

Intersection Settings

Cycle Length [s]	100
Lost time [s]	10.00

Phasing & Timing

Control Type	Permiss	Permiss	Permiss	Protecte	Permiss	Permiss	Split	Permiss	Split	Permiss	Permiss	Permiss
Signal group	0	2	0	1	6	0	3	0	0	0	0	0
Auxiliary Signal Groups												
Lead / Lag	-	-	-	Lead	-	-	Lead	-	-	-	-	-

Movement, Approach, & Intersection Results

V/C, Movement V/C Ratio	0.00	0.26	0.15	0.05	0.19	0.00	0.14	0.00	0.26	0.00	0.00	0.00
Intersection LOS	B											
Intersection V/C	0.687											

Intersection Level Of Service Report

Intersection 13: Irwindale Avenue (NS) at Jardin De Roca/Irwindale Rd (EW)

Control Type:	Signalized	Delay (sec / veh):	-
Analysis Method:	ICU 1	Level Of Service:	A
Analysis Period:	15 minutes	Volume to Capacity (v/c):	0.572

Intersection Setup

Name	Irwindale Avenue			Irwindale Avenue			Jardin De Roca			Irwindale Road		
Approach	Northbound			Southbound			Eastbound			Westbound		
Lane Configuration												
Turning Movement	Left	Thru	Right	Left	Thru	Right	Left	Thru	Right	Left	Thru	Right
Lane Width [ft]	12.00	12.00	12.00	12.00	12.00	12.00	12.00	12.00	12.00	12.00	12.00	12.00
No. of Lanes in Pocket	1	0	1	1	0	0	0	0	0	0	0	0
Pocket Length [ft]	130.00	100.00	180.00	245.00	100.00	100.00	100.00	100.00	100.00	100.00	100.00	100.00
Speed [mph]	35.00			35.00			25.00			25.00		
Grade [%]	0.00			0.00			0.00			0.00		
Crosswalk	No			No			No			Yes		

Volumes

Name	Irwindale Avenue			Irwindale Avenue			Jardin De Roca			Irwindale Road		
Base Volume Input [veh/h]	53	1015	115	168	1133	41	10	0	13	24	0	35
Base Volume Adjustment Factor	1.0000	1.0000	1.0000	1.0000	1.0000	1.0000	1.0000	1.0000	1.0000	1.0000	1.0000	1.0000
Heavy Vehicles Percentage [%]	2.00	2.00	2.00	2.00	2.00	2.00	2.00	2.00	2.00	2.00	2.00	2.00
Growth Rate	1.01	1.01	1.01	1.01	1.01	1.01	1.01	1.00	1.01	1.01	1.00	1.01
In-Process Volume [veh/h]	0	0	0	0	0	0	0	0	0	0	0	0
Site-Generated Trips [veh/h]	0	8	0	0	64	0	0	0	0	0	0	0
Diverted Trips [veh/h]	0	0	0	0	0	0	0	0	0	0	0	0
Pass-by Trips [veh/h]	0	0	0	0	0	0	0	0	0	0	0	0
Existing Site Adjustment Volume [veh/h]	0	0	0	0	0	0	0	0	0	0	0	0
Other Volume [veh/h]	0	0	0	0	0	0	0	0	0	0	0	0
Total Hourly Volume [veh/h]	54	1033	116	170	1208	41	10	0	13	24	0	35
Peak Hour Factor	1.0000	1.0000	1.0000	1.0000	1.0000	1.0000	1.0000	1.0000	1.0000	1.0000	1.0000	1.0000
Other Adjustment Factor	1.0000	1.0000	1.0000	1.0000	1.0000	1.0000	1.0000	1.0000	1.0000	1.0000	1.0000	1.0000
Total 15-Minute Volume [veh/h]	14	258	29	43	302	10	3	0	3	6	0	9
Total Analysis Volume [veh/h]	54	1033	116	170	1208	41	10	0	13	24	0	35
Pedestrian Volume [ped/h]	0			0			0			0		
Bicycle Volume [bicycles/h]	0			0			0			0		

Intersection Settings

Cycle Length [s]	100
Lost time [s]	10.00

Phasing & Timing

Control Type	Protecte	Permiss	Permiss	Protecte	Permiss	Permiss	Permiss	Permiss	Permiss	Permiss	Permiss	Permiss
Signal group	5	2	0	1	6	0	3	0	0	7	0	0
Auxiliary Signal Groups												
Lead / Lag	Lead	-	-	Lead	-	-	Lead	-	-	Lead	-	-

Movement, Approach, & Intersection Results

V/C, Movement V/C Ratio	0.03	0.32	0.07	0.11	0.38	0.03	0.01	0.00	0.01	0.02	0.00	0.05
Intersection LOS	A											
Intersection V/C	0.572											

Intersection Level Of Service Report
Intersection 14: Irwindale Avenue (NS) at 1st Street (EW)

Control Type:	Signalized	Delay (sec / veh):	-
Analysis Method:	ICU 1	Level Of Service:	A
Analysis Period:	15 minutes	Volume to Capacity (v/c):	0.509

Intersection Setup

Name	Irwindale Avenue			Irwindale Avenue			1st Street			1st Street		
Approach	Northbound			Southbound			Eastbound			Westbound		
Lane Configuration												
Turning Movement	Left	Thru	Right	Left	Thru	Right	Left	Thru	Right	Left	Thru	Right
Lane Width [ft]	12.00	12.00	12.00	12.00	12.00	12.00	12.00	12.00	12.00	12.00	12.00	12.00
No. of Lanes in Pocket	1	0	1	1	0	1	1	0	1	1	0	1
Pocket Length [ft]	100.00	100.00	70.00	120.00	100.00	240.00	90.00	100.00	95.00	75.00	100.00	75.00
Speed [mph]	35.00			35.00			35.00			25.00		
Grade [%]	0.00			0.00			0.00			0.00		
Crosswalk	Yes			No			Yes			Yes		

Volumes

Name	Irwindale Avenue			Irwindale Avenue			1st Street			1st Street		
Base Volume Input [veh/h]	38	1187	4	14	827	130	54	0	21	0	0	8
Base Volume Adjustment Factor	1.0000	1.0000	1.0000	1.0000	1.0000	1.0000	1.0000	1.0000	1.0000	1.0000	1.0000	1.0000
Heavy Vehicles Percentage [%]	2.00	2.00	2.00	2.00	2.00	2.00	2.00	2.00	2.00	2.00	2.00	2.00
Growth Rate	1.01	1.01	1.01	1.01	1.01	1.01	1.01	1.01	1.01	1.01	1.01	1.01
In-Process Volume [veh/h]	0	0	0	0	0	0	0	0	0	0	0	0
Site-Generated Trips [veh/h]	0	8	0	0	64	0	0	0	0	0	0	0
Diverted Trips [veh/h]	0	0	0	0	0	0	0	0	0	0	0	0
Pass-by Trips [veh/h]	0	0	0	0	0	0	0	0	0	0	0	0
Existing Site Adjustment Volume [veh/h]	0	0	0	0	0	0	0	0	0	0	0	0
Other Volume [veh/h]	0	0	0	0	0	0	0	0	0	0	0	0
Total Hourly Volume [veh/h]	38	1207	4	14	899	131	55	0	21	0	0	8
Peak Hour Factor	1.0000	1.0000	1.0000	1.0000	1.0000	1.0000	1.0000	1.0000	1.0000	1.0000	1.0000	1.0000
Other Adjustment Factor	1.0000	1.0000	1.0000	1.0000	1.0000	1.0000	1.0000	1.0000	1.0000	1.0000	1.0000	1.0000
Total 15-Minute Volume [veh/h]	10	302	1	4	225	33	14	0	5	0	0	2
Total Analysis Volume [veh/h]	38	1207	4	14	899	131	55	0	21	0	0	8
Pedestrian Volume [ped/h]	0			0			0			0		
Bicycle Volume [bicycles/h]	0			0			0			0		

Intersection Settings

Cycle Length [s]	100
Lost time [s]	10.00

Phasing & Timing

Control Type	Permiss	Permiss	Permiss	Permiss	Permiss	Permiss	Split	Split	Split	Split	Split	Split
Signal group	0	2	0	0	6	0	0	8	0	0	4	0
Auxiliary Signal Groups												
Lead / Lag	-	-	-	-	-	-	-	-	-	-	-	-

Movement, Approach, & Intersection Results

V/C, Movement V/C Ratio	0.02	0.38	0.38	0.01	0.19	0.08	0.02	0.00	0.01	0.00	0.00	0.01
Intersection LOS	A											
Intersection V/C	0.509											

Intersection Level Of Service Report
Intersection 15: Irwindale Avenue (NS) at Gladstone Street (EW)

Control Type:	Signalized	Delay (sec / veh):	-
Analysis Method:	ICU 1	Level Of Service:	B
Analysis Period:	15 minutes	Volume to Capacity (v/c):	0.671

Intersection Setup

Name	Irwindale Avenue			Irwindale Avenue			Gladstone Street			Gladstone Street		
Approach	Northbound			Southbound			Eastbound			Westbound		
Lane Configuration												
Turning Movement	Left	Thru	Right	Left	Thru	Right	Left	Thru	Right	Left	Thru	Right
Lane Width [ft]	12.00	12.00	12.00	12.00	12.00	12.00	12.00	12.00	12.00	12.00	12.00	12.00
No. of Lanes in Pocket	1	0	0	2	0	0	1	0	0	1	0	1
Pocket Length [ft]	120.00	100.00	100.00	210.00	100.00	100.00	50.00	100.00	100.00	200.00	100.00	190.00
Speed [mph]	35.00			35.00			25.00			40.00		
Grade [%]	0.00			0.00			0.00			0.00		
Crosswalk	Yes			Yes			Yes			Yes		

Volumes

Name	Irwindale Avenue			Irwindale Avenue			Gladstone Street			Gladstone Street		
Base Volume Input [veh/h]	10	634	67	135	551	6	1	10	22	456	70	680
Base Volume Adjustment Factor	1.0000	1.0000	1.0000	1.0000	1.0000	1.0000	1.0000	1.0000	1.0000	1.0000	1.0000	1.0000
Heavy Vehicles Percentage [%]	2.00	2.00	2.00	2.00	2.00	2.00	2.00	2.00	2.00	2.00	2.00	2.00
Growth Rate	1.01	1.01	1.01	1.01	1.01	1.01	1.01	1.01	1.01	1.01	1.01	1.01
In-Process Volume [veh/h]	0	0	0	0	0	0	0	0	0	0	0	0
Site-Generated Trips [veh/h]	0	0	0	64	0	0	0	0	0	0	0	8
Diverted Trips [veh/h]	0	0	0	0	0	0	0	0	0	0	0	0
Pass-by Trips [veh/h]	0	0	0	0	0	0	0	0	0	0	0	0
Existing Site Adjustment Volume [veh/h]	0	0	0	0	0	0	0	0	0	0	0	0
Other Volume [veh/h]	0	0	0	0	0	0	0	0	0	0	0	0
Total Hourly Volume [veh/h]	10	640	68	200	557	6	1	10	22	461	71	695
Peak Hour Factor	1.0000	1.0000	1.0000	1.0000	1.0000	1.0000	1.0000	1.0000	1.0000	1.0000	1.0000	1.0000
Other Adjustment Factor	1.0000	1.0000	1.0000	1.0000	1.0000	1.0000	1.0000	1.0000	1.0000	1.0000	1.0000	1.0000
Total 15-Minute Volume [veh/h]	3	160	17	50	139	2	0	3	6	115	18	174
Total Analysis Volume [veh/h]	10	640	68	200	557	6	1	10	22	461	71	695
Pedestrian Volume [ped/h]	0			0			0			0		
Bicycle Volume [bicycles/h]	0			0			0			0		

Intersection Settings

Cycle Length [s]	100
Lost time [s]	10.00

Phasing & Timing

Control Type	Protecte	Permiss	Permiss	Protecte	Permiss	Permiss	Permiss	Permiss	Permiss	Permiss	Permiss	Overlap
Signal group	5	2	0	1	6	0	0	8	0	0	4	4
Auxiliary Signal Groups												1,4
Lead / Lag	Lead	-	-	Lead	-	-	-	-	-	-	-	-

Movement, Approach, & Intersection Results

V/C, Movement V/C Ratio	0.01	0.20	0.04	0.06	0.18	0.18	0.00	0.01	0.01	0.29	0.04	0.15
Intersection LOS	B											
Intersection V/C	0.671											

Intersection Level Of Service Report

Intersection 16: Irwindale Avenue (NS) at Arrow Highway (EW)

Control Type:	Signalized	Delay (sec / veh):	-
Analysis Method:	ICU 1	Level Of Service:	D
Analysis Period:	15 minutes	Volume to Capacity (v/c):	0.853

Intersection Setup

Name	Irwindale Avenue			Irwindale Avenue			Arrow Highway			Arrow Highway		
Approach	Northbound			Southbound			Eastbound			Westbound		
Lane Configuration												
Turning Movement	Left	Thru	Right	Left	Thru	Right	Left	Thru	Right	Left	Thru	Right
Lane Width [ft]	12.00	12.00	12.00	12.00	12.00	12.00	12.00	12.00	12.00	12.00	12.00	12.00
No. of Lanes in Pocket	1	0	0	1	0	1	2	0	0	1	0	0
Pocket Length [ft]	175.00	100.00	100.00	185.00	100.00	185.00	205.00	100.00	100.00	335.00	100.00	100.00
Speed [mph]	35.00			35.00			45.00			45.00		
Grade [%]	0.00			0.00			0.00			0.00		
Crosswalk	Yes			Yes			Yes			Yes		

Volumes

Name	Irwindale Avenue			Irwindale Avenue			Arrow Highway			Arrow Highway		
Base Volume Input [veh/h]	163	579	65	98	457	446	277	423	52	67	1022	98
Base Volume Adjustment Factor	1.0000	1.0000	1.0000	1.0000	1.0000	1.0000	1.0000	1.0000	1.0000	1.0000	1.0000	1.0000
Heavy Vehicles Percentage [%]	2.00	2.00	2.00	2.00	2.00	2.00	2.00	2.00	2.00	2.00	2.00	2.00
Growth Rate	1.01	1.01	1.01	1.01	1.01	1.01	1.01	1.01	1.01	1.01	1.01	1.01
In-Process Volume [veh/h]	0	0	0	0	0	0	0	0	0	0	0	0
Site-Generated Trips [veh/h]	0	0	8	0	0	0	0	134	0	1	18	0
Diverted Trips [veh/h]	0	0	0	0	0	0	0	0	0	0	0	0
Pass-by Trips [veh/h]	0	0	0	0	0	0	0	0	0	0	0	0
Existing Site Adjustment Volume [veh/h]	0	0	0	0	0	0	0	0	0	0	0	0
Other Volume [veh/h]	0	0	0	0	0	0	0	0	0	0	0	0
Total Hourly Volume [veh/h]	165	585	74	99	462	450	280	561	53	69	1050	99
Peak Hour Factor	1.0000	1.0000	1.0000	1.0000	1.0000	1.0000	1.0000	1.0000	1.0000	1.0000	1.0000	1.0000
Other Adjustment Factor	1.0000	1.0000	1.0000	1.0000	1.0000	1.0000	1.0000	1.0000	1.0000	1.0000	1.0000	1.0000
Total 15-Minute Volume [veh/h]	41	146	19	25	116	113	70	140	13	17	263	25
Total Analysis Volume [veh/h]	165	585	74	99	462	450	280	561	53	69	1050	99
Pedestrian Volume [ped/h]	0			0			0			0		
Bicycle Volume [bicycles/h]	0			0			0			0		

Intersection Settings

Cycle Length [s]	100
Lost time [s]	10.00

Phasing & Timing

Control Type	Protecte	Permiss	Permiss	Protecte	Permiss	Overlap	Protecte	Permiss	Permiss	Protecte	Permiss	Permiss
Signal group	5	2	0	1	6	6	3	8	0	7	4	0
Auxiliary Signal Groups						3,6						
Lead / Lag	Lead	-	-	Lead	-	-	Lead	-	-	Lead	-	-

Movement, Approach, & Intersection Results

V/C, Movement V/C Ratio	0.10	0.21	0.21	0.06	0.14	0.19	0.09	0.13	0.13	0.04	0.36	0.36
Intersection LOS	D											
Intersection V/C	0.853											

Intersection Level Of Service Report

Intersection 17: Vincent Avenue (NS) at Gladstone Street (EW)

Control Type:	Signalized	Delay (sec / veh):	-
Analysis Method:	ICU 1	Level Of Service:	A
Analysis Period:	15 minutes	Volume to Capacity (v/c):	0.533

Intersection Setup

Name	Vincent Avenue			Vincent Avenue			Gladstone Street			Gladstone Street		
Approach	Northbound			Southbound			Eastbound			Westbound		
Lane Configuration												
Turning Movement	Left	Thru	Right	Left	Thru	Right	Left	Thru	Right	Left	Thru	Right
Lane Width [ft]	12.00	12.00	12.00	12.00	12.00	12.00	12.00	12.00	12.00	12.00	12.00	12.00
No. of Lanes in Pocket	1	0	0	0	0	0	2	0	0	1	0	0
Pocket Length [ft]	195.00	100.00	100.00	100.00	100.00	100.00	230.00	100.00	100.00	175.00	100.00	100.00
Speed [mph]	45.00			25.00			45.00			45.00		
Grade [%]	0.00			0.00			0.00			0.00		
Crosswalk	Yes			Yes			No			Yes		

Volumes

Name	Vincent Avenue			Vincent Avenue			Gladstone Street			Gladstone Street		
Base Volume Input [veh/h]	265	29	147	16	8	38	43	97	64	178	942	2
Base Volume Adjustment Factor	1.0000	1.0000	1.0000	1.0000	1.0000	1.0000	1.0000	1.0000	1.0000	1.0000	1.0000	1.0000
Heavy Vehicles Percentage [%]	2.00	2.00	2.00	2.00	2.00	2.00	2.00	2.00	2.00	2.00	2.00	2.00
Growth Rate	1.01	1.01	1.01	1.01	1.01	1.01	1.01	1.01	1.01	1.01	1.01	1.01
In-Process Volume [veh/h]	0	0	0	0	0	0	0	0	0	0	0	0
Site-Generated Trips [veh/h]	8	0	14	0	0	0	0	0	64	102	0	0
Diverted Trips [veh/h]	0	0	0	0	0	0	0	0	0	0	0	0
Pass-by Trips [veh/h]	0	0	0	0	0	0	0	0	0	0	0	0
Existing Site Adjustment Volume [veh/h]	0	0	0	0	0	0	0	0	0	0	0	0
Other Volume [veh/h]	0	0	0	0	0	0	0	0	0	0	0	0
Total Hourly Volume [veh/h]	276	29	162	16	8	38	43	98	129	282	951	2
Peak Hour Factor	1.0000	1.0000	1.0000	1.0000	1.0000	1.0000	1.0000	1.0000	1.0000	1.0000	1.0000	1.0000
Other Adjustment Factor	1.0000	1.0000	1.0000	1.0000	1.0000	1.0000	1.0000	1.0000	1.0000	1.0000	1.0000	1.0000
Total 15-Minute Volume [veh/h]	69	7	41	4	2	10	11	25	32	71	238	1
Total Analysis Volume [veh/h]	276	29	162	16	8	38	43	98	129	282	951	2
Pedestrian Volume [ped/h]	0			0			0			0		
Bicycle Volume [bicycles/h]	0			0			0			0		

Intersection Settings

Cycle Length [s]	100
Lost time [s]	10.00

Phasing & Timing

Control Type	Split	Split	Split	Split	Split	Split	Protecte	Permiss	Permiss	Protecte	Permiss	Permiss
Signal group	0	2	0	0	6	0	3	8	0	7	4	0
Auxiliary Signal Groups												
Lead / Lag	-	-	-	-	-	-	Lead	-	-	Lead	-	-

Movement, Approach, & Intersection Results

V/C, Movement V/C Ratio	0.09	0.10	0.10	0.01	0.03	0.03	0.01	0.07	0.07	0.18	0.30	0.30
Intersection LOS	A											
Intersection V/C	0.533											

Intersection Level Of Service Report

Intersection 18: Vincent Avenue (NS) at Arrow Highway (EW)

Control Type:	Signalized	Delay (sec / veh):	-
Analysis Method:	ICU 1	Level Of Service:	C
Analysis Period:	15 minutes	Volume to Capacity (v/c):	0.746

Intersection Setup

Name	Vincent Avenue			Vincent Avenue			Arrow Highway			Arrow Highway		
Approach	Northbound			Southbound			Eastbound			Westbound		
Lane Configuration												
Turning Movement	Left	Thru	Right	Left	Thru	Right	Left	Thru	Right	Left	Thru	Right
Lane Width [ft]	12.00	12.00	12.00	12.00	12.00	12.00	12.00	12.00	12.00	12.00	12.00	12.00
No. of Lanes in Pocket	1	0	0	1	0	0	1	0	0	1	0	0
Pocket Length [ft]	200.00	100.00	100.00	200.00	100.00	100.00	215.00	100.00	100.00	160.00	100.00	100.00
Speed [mph]	45.00			45.00			45.00			45.00		
Grade [%]	0.00			0.00			0.00			0.00		
Crosswalk	Yes			Yes			Yes			Yes		

Volumes

Name	Vincent Avenue			Vincent Avenue			Arrow Highway			Arrow Highway		
Base Volume Input [veh/h]	161	285	88	22	189	65	58	378	88	138	1150	89
Base Volume Adjustment Factor	1.0000	1.0000	1.0000	1.0000	1.0000	1.0000	1.0000	1.0000	1.0000	1.0000	1.0000	1.0000
Heavy Vehicles Percentage [%]	2.00	2.00	2.00	2.00	2.00	2.00	2.00	2.00	2.00	2.00	2.00	2.00
Growth Rate	1.01	1.01	1.01	1.01	1.01	1.01	1.01	1.01	1.01	1.01	1.01	1.01
In-Process Volume [veh/h]	0	0	0	0	0	0	0	0	0	0	0	0
Site-Generated Trips [veh/h]	19	22	4	0	166	0	0	0	142	26	0	0
Diverted Trips [veh/h]	0	0	0	0	0	0	0	0	0	0	0	0
Pass-by Trips [veh/h]	0	0	0	0	0	0	0	0	0	0	0	0
Existing Site Adjustment Volume [veh/h]	0	0	0	0	0	0	0	0	0	0	0	0
Other Volume [veh/h]	0	0	0	0	0	0	0	0	0	0	0	0
Total Hourly Volume [veh/h]	182	310	93	22	357	66	59	382	231	165	1162	90
Peak Hour Factor	1.0000	1.0000	1.0000	1.0000	1.0000	1.0000	1.0000	1.0000	1.0000	1.0000	1.0000	1.0000
Other Adjustment Factor	1.0000	1.0000	1.0000	1.0000	1.0000	1.0000	1.0000	1.0000	1.0000	1.0000	1.0000	1.0000
Total 15-Minute Volume [veh/h]	46	78	23	6	89	17	15	96	58	41	291	23
Total Analysis Volume [veh/h]	182	310	93	22	357	66	59	382	231	165	1162	90
Pedestrian Volume [ped/h]	0			0			0			0		
Bicycle Volume [bicycles/h]	0			0			0			0		

Intersection Settings

Cycle Length [s]	100
Lost time [s]	10.00

Phasing & Timing

Control Type	Permiss	Permiss	Permiss	Permiss	Permiss	Permiss	Permiss	Permiss	Permiss	Permiss	Permiss	Permiss
Signal group	0	2	0	0	6	0	0	8	0	0	4	0
Auxiliary Signal Groups												
Lead / Lag	-	-	-	-	-	-	-	-	-	-	-	-

Movement, Approach, & Intersection Results

V/C, Movement V/C Ratio	0.11	0.13	0.13	0.01	0.13	0.13	0.04	0.12	0.14	0.10	0.36	0.06
Intersection LOS	C											
Intersection V/C	0.746											

Intersection Level Of Service Report
Intersection 19: Vincent Avenue (NS) at Project North Driveway (EW)

Control Type:	Two-way stop	Delay (sec / veh):	14.7
Analysis Method:	HCM 6th Edition	Level Of Service:	B
Analysis Period:	15 minutes	Volume to Capacity (v/c):	0.061

Intersection Setup

Name	Vincent Avenue		Vincent Avenue		Project North Driveway	
Approach	Northbound		Southbound		Eastbound	
Lane Configuration						
Turning Movement	Left	Thru	Thru	Right	Left	Right
Lane Width [ft]	12.00	12.00	12.00	12.00	12.00	12.00
No. of Lanes in Pocket	0	0	0	0	0	0
Pocket Length [ft]	100.00	100.00	100.00	100.00	100.00	100.00
Speed [mph]	45.00		45.00		15.00	
Grade [%]	0.00		0.00		0.00	
Crosswalk	No		No		No	

Volumes

Name	Vincent Avenue		Vincent Avenue		Project North Driveway	
Base Volume Input [veh/h]	0	534	534	0	0	0
Base Volume Adjustment Factor	1.0000	1.0000	1.0000	1.0000	1.0000	1.0000
Heavy Vehicles Percentage [%]	2.00	2.00	2.00	2.00	2.00	2.00
Growth Rate	1.00	1.01	1.01	1.00	1.00	1.00
In-Process Volume [veh/h]	0	0	0	0	0	0
Site-Generated Trips [veh/h]	34	21	155	179	24	5
Diverted Trips [veh/h]	0	0	0	0	0	0
Pass-by Trips [veh/h]	0	0	0	0	0	0
Existing Site Adjustment Volume [veh/h]	0	0	0	0	0	0
Other Volume [veh/h]	0	0	0	0	0	0
Total Hourly Volume [veh/h]	34	560	694	179	24	5
Peak Hour Factor	1.0000	1.0000	1.0000	1.0000	1.0000	1.0000
Other Adjustment Factor	1.0000	1.0000	1.0000	1.0000	1.0000	1.0000
Total 15-Minute Volume [veh/h]	9	140	174	45	6	1
Total Analysis Volume [veh/h]	34	560	694	179	24	5
Pedestrian Volume [ped/h]	0		0		0	

Intersection Settings

Priority Scheme	Free	Free	Stop
Flared Lane			
Storage Area [veh]	0	0	0
Two-Stage Gap Acceptance			Yes
Number of Storage Spaces in Median	0	0	2

Movement, Approach, & Intersection Results

V/C, Movement V/C Ratio	0.04	0.01	0.01	0.00	0.06	0.01
d_M, Delay for Movement [s/veh]	9.90	0.00	0.00	0.00	14.67	10.59
Movement LOS	A	A	A	A	B	B
95th-Percentile Queue Length [veh/ln]	0.14	0.00	0.00	0.00	0.19	0.02
95th-Percentile Queue Length [ft/ln]	3.47	0.00	0.00	0.00	4.81	0.58
d_A, Approach Delay [s/veh]	0.57		0.00		13.96	
Approach LOS	A		A		B	
d_I, Intersection Delay [s/veh]	0.50					
Intersection LOS	B					

Intersection Level Of Service Report
Intersection 20: Vincent Avenue (NS) at Project South Driveway (EW)

Control Type:	Two-way stop	Delay (sec / veh):	12.8
Analysis Method:	HCM 6th Edition	Level Of Service:	B
Analysis Period:	15 minutes	Volume to Capacity (v/c):	0.043

Intersection Setup

Name	Vincent Avenue		Vincent Avenue		Project South Driveway	
Approach	Northbound		Southbound		Eastbound	
Lane Configuration						
Turning Movement	Left	Thru	Thru	Right	Left	Right
Lane Width [ft]	12.00	12.00	12.00	12.00	12.00	12.00
No. of Lanes in Pocket	0	0	0	0	0	0
Pocket Length [ft]	100.00	100.00	100.00	100.00	100.00	100.00
Speed [mph]	45.00		45.00		15.00	
Grade [%]	0.00		0.00		0.00	
Crosswalk	No		No		No	

Volumes

Name	Vincent Avenue		Vincent Avenue		Project South Driveway	
Base Volume Input [veh/h]	0	534	412	0	0	0
Base Volume Adjustment Factor	1.0000	1.0000	1.0000	1.0000	1.0000	1.0000
Heavy Vehicles Percentage [%]	2.00	2.00	2.00	2.00	2.00	2.00
Growth Rate	1.00	1.01	1.01	1.00	1.00	1.00
In-Process Volume [veh/h]	0	0	0	0	0	0
Site-Generated Trips [veh/h]	58	34	5	155	21	8
Diverted Trips [veh/h]	0	0	0	0	0	0
Pass-by Trips [veh/h]	0	0	0	0	0	0
Existing Site Adjustment Volume [veh/h]	0	0	0	0	0	0
Other Volume [veh/h]	0	0	0	0	0	0
Total Hourly Volume [veh/h]	58	573	421	155	21	8
Peak Hour Factor	1.0000	1.0000	1.0000	1.0000	1.0000	1.0000
Other Adjustment Factor	1.0000	1.0000	1.0000	1.0000	1.0000	1.0000
Total 15-Minute Volume [veh/h]	15	143	105	39	5	2
Total Analysis Volume [veh/h]	58	573	421	155	21	8
Pedestrian Volume [ped/h]	0		0		0	

Intersection Settings

Priority Scheme	Free	Free	Stop
Flared Lane			
Storage Area [veh]	0	0	0
Two-Stage Gap Acceptance			Yes
Number of Storage Spaces in Median	0	0	2

Movement, Approach, & Intersection Results

V/C, Movement V/C Ratio	0.06	0.01	0.00	0.00	0.04	0.01
d_M, Delay for Movement [s/veh]	8.85	0.00	0.00	0.00	12.78	9.57
Movement LOS	A	A	A	A	B	A
95th-Percentile Queue Length [veh/ln]	0.19	0.00	0.00	0.00	0.14	0.03
95th-Percentile Queue Length [ft/ln]	4.64	0.00	0.00	0.00	3.40	0.76
d_A, Approach Delay [s/veh]	0.81		0.00		11.90	
Approach LOS	A		A		B	
d_I, Intersection Delay [s/veh]	0.69					
Intersection LOS	B					

Intersection Level Of Service Report

Intersection 21: Vincent Avenue (NS) at Cypress Street (EW)

Control Type:	Signalized	Delay (sec / veh):	-
Analysis Method:	ICU 1	Level Of Service:	B
Analysis Period:	15 minutes	Volume to Capacity (v/c):	0.658

Intersection Setup

Name	Vincent Avenue			Vincent Avenue			Cypress Street			Cypress Street		
Approach	Northbound			Southbound			Eastbound			Westbound		
Lane Configuration												
Turning Movement	Left	Thru	Right	Left	Thru	Right	Left	Thru	Right	Left	Thru	Right
Lane Width [ft]	12.00	12.00	12.00	12.00	12.00	12.00	12.00	12.00	12.00	12.00	12.00	12.00
No. of Lanes in Pocket	1	0	0	1	0	0	1	0	0	1	0	0
Pocket Length [ft]	120.00	100.00	100.00	120.00	100.00	100.00	100.00	100.00	100.00	150.00	100.00	100.00
Speed [mph]	40.00			45.00			40.00			40.00		
Grade [%]	0.00			0.00			0.00			0.00		
Crosswalk	Yes			Yes			Yes			Yes		

Volumes

Name	Vincent Avenue			Vincent Avenue			Cypress Street			Cypress Street		
Base Volume Input [veh/h]	162	467	125	65	398	71	34	303	50	190	792	78
Base Volume Adjustment Factor	1.0000	1.0000	1.0000	1.0000	1.0000	1.0000	1.0000	1.0000	1.0000	1.0000	1.0000	1.0000
Heavy Vehicles Percentage [%]	2.00	2.00	2.00	2.00	2.00	2.00	2.00	2.00	2.00	2.00	2.00	2.00
Growth Rate	1.01	1.01	1.01	1.01	1.01	1.01	1.01	1.01	1.01	1.01	1.01	1.01
In-Process Volume [veh/h]	0	0	0	0	0	0	0	0	0	0	0	0
Site-Generated Trips [veh/h]	0	76	0	1	11	1	8	0	0	0	0	8
Diverted Trips [veh/h]	0	0	0	0	0	0	0	0	0	0	0	0
Pass-by Trips [veh/h]	0	0	0	0	0	0	0	0	0	0	0	0
Existing Site Adjustment Volume [veh/h]	0	0	0	0	0	0	0	0	0	0	0	0
Other Volume [veh/h]	0	0	0	0	0	0	0	0	0	0	0	0
Total Hourly Volume [veh/h]	164	548	126	67	413	73	42	306	51	192	800	87
Peak Hour Factor	1.0000	1.0000	1.0000	1.0000	1.0000	1.0000	1.0000	1.0000	1.0000	1.0000	1.0000	1.0000
Other Adjustment Factor	1.0000	1.0000	1.0000	1.0000	1.0000	1.0000	1.0000	1.0000	1.0000	1.0000	1.0000	1.0000
Total 15-Minute Volume [veh/h]	41	137	32	17	103	18	11	77	13	48	200	22
Total Analysis Volume [veh/h]	164	548	126	67	413	73	42	306	51	192	800	87
Pedestrian Volume [ped/h]	0			0			0			0		
Bicycle Volume [bicycles/h]	0			0			0			0		

Intersection Settings

Cycle Length [s]	100
Lost time [s]	10.00

Phasing & Timing

Control Type	Permiss	Permiss	Permiss	Permiss	Permiss	Permiss	Permiss	Permiss	Permiss	Permiss	Permiss	Permiss
Signal group	0	2	0	0	6	0	0	8	0	0	4	0
Auxiliary Signal Groups												
Lead / Lag	-	-	-	-	-	-	-	-	-	-	-	-

Movement, Approach, & Intersection Results

V/C, Movement V/C Ratio	0.10	0.21	0.21	0.04	0.15	0.15	0.03	0.11	0.11	0.12	0.28	0.28
Intersection LOS	B											
Intersection V/C	0.658											

Intersection Level Of Service Report

Intersection 22: Vincent Avenue (NS) at San Bernardino Road (EW)

Control Type:	Signalized	Delay (sec / veh):	-
Analysis Method:	ICU 1	Level Of Service:	B
Analysis Period:	15 minutes	Volume to Capacity (v/c):	0.659

Intersection Setup

Name	Vincent Avenue			Vincent Avenue			San Bernardino Road			San Berardino Road		
Approach	Northbound			Southbound			Eastbound			Westbound		
Lane Configuration												
Turning Movement	Left	Thru	Right	Left	Thru	Right	Left	Thru	Right	Left	Thru	Right
Lane Width [ft]	12.00	12.00	12.00	12.00	12.00	12.00	12.00	12.00	12.00	12.00	12.00	12.00
No. of Lanes in Pocket	1	0	0	1	0	0	1	0	0	1	0	0
Pocket Length [ft]	120.00	100.00	100.00	150.00	100.00	100.00	150.00	100.00	100.00	165.00	100.00	100.00
Speed [mph]	35.00			40.00			40.00			40.00		
Grade [%]	0.00			0.00			0.00			0.00		
Crosswalk	Yes			Yes			Yes			Yes		

Volumes

Name	Vincent Avenue			Vincent Avenue			San Bernardino Road			San Berardino Road		
Base Volume Input [veh/h]	106	546	50	70	556	99	82	330	67	99	597	131
Base Volume Adjustment Factor	1.0000	1.0000	1.0000	1.0000	1.0000	1.0000	1.0000	1.0000	1.0000	1.0000	1.0000	1.0000
Heavy Vehicles Percentage [%]	2.00	2.00	2.00	2.00	2.00	2.00	2.00	2.00	2.00	2.00	2.00	2.00
Growth Rate	1.01	1.01	1.01	1.01	1.01	1.01	1.01	1.01	1.01	1.01	1.01	1.01
In-Process Volume [veh/h]	0	0	0	0	0	0	0	0	0	0	0	0
Site-Generated Trips [veh/h]	0	76	0	0	11	0	0	0	0	0	0	0
Diverted Trips [veh/h]	0	0	0	0	0	0	0	0	0	0	0	0
Pass-by Trips [veh/h]	0	0	0	0	0	0	0	0	0	0	0	0
Existing Site Adjustment Volume [veh/h]	0	0	0	0	0	0	0	0	0	0	0	0
Other Volume [veh/h]	0	0	0	0	0	0	0	0	0	0	0	0
Total Hourly Volume [veh/h]	107	627	51	71	573	100	83	333	68	100	603	132
Peak Hour Factor	1.0000	1.0000	1.0000	1.0000	1.0000	1.0000	1.0000	1.0000	1.0000	1.0000	1.0000	1.0000
Other Adjustment Factor	1.0000	1.0000	1.0000	1.0000	1.0000	1.0000	1.0000	1.0000	1.0000	1.0000	1.0000	1.0000
Total 15-Minute Volume [veh/h]	27	157	13	18	143	25	21	83	17	25	151	33
Total Analysis Volume [veh/h]	107	627	51	71	573	100	83	333	68	100	603	132
Pedestrian Volume [ped/h]	0			0			0			0		
Bicycle Volume [bicycles/h]	0			0			0			0		

Intersection Settings

Cycle Length [s]	100
Lost time [s]	10.00

Phasing & Timing

Control Type	Permiss	Permiss	Permiss	Permiss	Permiss	Permiss	Protecte	Permiss	Permiss	Protecte	Permiss	Permiss
Signal group	0	2	0	0	6	0	3	8	0	7	4	0
Auxiliary Signal Groups												
Lead / Lag	-	-	-	-	-	-	Lead	-	-	Lead	-	-

Movement, Approach, & Intersection Results

V/C, Movement V/C Ratio	0.07	0.21	0.21	0.04	0.21	0.21	0.05	0.13	0.13	0.06	0.23	0.23
Intersection LOS	B											
Intersection V/C	0.659											

Intersection Level Of Service Report
Intersection 23: Vincent Avenue (NS) at Badillo Street (EW)

Control Type:	Signalized	Delay (sec / veh):	-
Analysis Method:	ICU 1	Level Of Service:	B
Analysis Period:	15 minutes	Volume to Capacity (v/c):	0.620

Intersection Setup

Name	Vincent Avenue			Vincent Avenue			Dadillo Street			Badillo Street		
Approach	Northbound			Southbound			Eastbound			Westbound		
Lane Configuration												
Turning Movement	Left	Thru	Right	Left	Thru	Right	Left	Thru	Right	Left	Thru	Right
Lane Width [ft]	12.00	12.00	12.00	12.00	12.00	12.00	12.00	12.00	12.00	12.00	12.00	12.00
No. of Lanes in Pocket	1	0	0	1	0	0	1	0	0	1	0	0
Pocket Length [ft]	200.00	100.00	100.00	190.00	100.00	100.00	195.00	100.00	100.00	195.00	100.00	100.00
Speed [mph]	40.00			35.00			45.00			45.00		
Grade [%]	0.00			0.00			0.00			0.00		
Crosswalk	Yes			Yes			Yes			Yes		

Volumes

Name	Vincent Avenue			Vincent Avenue			Dadillo Street			Badillo Street		
Base Volume Input [veh/h]	105	629	177	42	580	121	31	506	113	110	770	88
Base Volume Adjustment Factor	1.0000	1.0000	1.0000	1.0000	1.0000	1.0000	1.0000	1.0000	1.0000	1.0000	1.0000	1.0000
Heavy Vehicles Percentage [%]	2.00	2.00	2.00	2.00	2.00	2.00	2.00	2.00	2.00	2.00	2.00	2.00
Growth Rate	1.01	1.01	1.01	1.01	1.01	1.01	1.01	1.01	1.01	1.01	1.01	1.01
In-Process Volume [veh/h]	0	0	0	0	0	0	0	0	0	0	0	0
Site-Generated Trips [veh/h]	0	60	0	1	9	1	8	0	0	0	0	8
Diverted Trips [veh/h]	0	0	0	0	0	0	0	0	0	0	0	0
Pass-by Trips [veh/h]	0	0	0	0	0	0	0	0	0	0	0	0
Existing Site Adjustment Volume [veh/h]	0	0	0	0	0	0	0	0	0	0	0	0
Other Volume [veh/h]	0	0	0	0	0	0	0	0	0	0	0	0
Total Hourly Volume [veh/h]	106	695	179	43	595	123	39	511	114	111	778	97
Peak Hour Factor	1.0000	1.0000	1.0000	1.0000	1.0000	1.0000	1.0000	1.0000	1.0000	1.0000	1.0000	1.0000
Other Adjustment Factor	1.0000	1.0000	1.0000	1.0000	1.0000	1.0000	1.0000	1.0000	1.0000	1.0000	1.0000	1.0000
Total 15-Minute Volume [veh/h]	27	174	45	11	149	31	10	128	29	28	195	24
Total Analysis Volume [veh/h]	106	695	179	43	595	123	39	511	114	111	778	97
Pedestrian Volume [ped/h]	0			0			0			0		
Bicycle Volume [bicycles/h]	0			0			0			0		

Intersection Settings

Cycle Length [s]	100
Lost time [s]	10.00

Phasing & Timing

Control Type	Protecte	Permiss	Permiss	Protecte	Permiss	Permiss	Protecte	Permiss	Permiss	Protecte	Permiss	Permiss
Signal group	5	2	0	1	6	0	3	8	0	7	4	0
Auxiliary Signal Groups												
Lead / Lag	Lead	-	-	Lead	-	-	Lead	-	-	Lead	-	-

Movement, Approach, & Intersection Results

V/C, Movement V/C Ratio	0.07	0.22	0.11	0.03	0.19	0.08	0.02	0.16	0.07	0.07	0.24	0.06
Intersection LOS	B											
Intersection V/C	0.620											

Intersection Level Of Service Report
Intersection 24: Vincent Avenue (NS) at Puente Avenue (EW)

Control Type:	Signalized	Delay (sec / veh):	-
Analysis Method:	ICU 1	Level Of Service:	A
Analysis Period:	15 minutes	Volume to Capacity (v/c):	0.599

Intersection Setup

Name	Vincent Avenue			Vincent Avenue			Puente Avenue			Puente Avenue		
Approach	Northbound			Southbound			Eastbound			Westbound		
Lane Configuration												
Turning Movement	Left	Thru	Right	Left	Thru	Right	Left	Thru	Right	Left	Thru	Right
Lane Width [ft]	12.00	12.00	12.00	12.00	12.00	12.00	12.00	12.00	12.00	12.00	12.00	12.00
No. of Lanes in Pocket	1	0	0	1	0	0	0	0	0	0	0	0
Pocket Length [ft]	195.00	100.00	100.00	195.00	100.00	100.00	100.00	100.00	100.00	100.00	100.00	100.00
Speed [mph]	40.00			40.00			40.00			40.00		
Grade [%]	0.00			0.00			0.00			0.00		
Crosswalk	Yes			Yes			Yes			Yes		

Volumes

Name	Vincent Avenue			Vincent Avenue			Puente Avenue			Puente Avenue		
Base Volume Input [veh/h]	67	687	31	57	660	69	42	349	66	74	563	96
Base Volume Adjustment Factor	1.0000	1.0000	1.0000	1.0000	1.0000	1.0000	1.0000	1.0000	1.0000	1.0000	1.0000	1.0000
Heavy Vehicles Percentage [%]	2.00	2.00	2.00	2.00	2.00	2.00	2.00	2.00	2.00	2.00	2.00	2.00
Growth Rate	1.01	1.01	1.01	1.01	1.01	1.01	1.01	1.01	1.01	1.01	1.01	1.01
In-Process Volume [veh/h]	0	0	0	0	0	0	0	0	0	0	0	0
Site-Generated Trips [veh/h]	0	60	0	0	9	0	0	0	0	0	0	0
Diverted Trips [veh/h]	0	0	0	0	0	0	0	0	0	0	0	0
Pass-by Trips [veh/h]	0	0	0	0	0	0	0	0	0	0	0	0
Existing Site Adjustment Volume [veh/h]	0	0	0	0	0	0	0	0	0	0	0	0
Other Volume [veh/h]	0	0	0	0	0	0	0	0	0	0	0	0
Total Hourly Volume [veh/h]	68	754	31	58	676	70	42	352	67	75	569	97
Peak Hour Factor	1.0000	1.0000	1.0000	1.0000	1.0000	1.0000	1.0000	1.0000	1.0000	1.0000	1.0000	1.0000
Other Adjustment Factor	1.0000	1.0000	1.0000	1.0000	1.0000	1.0000	1.0000	1.0000	1.0000	1.0000	1.0000	1.0000
Total 15-Minute Volume [veh/h]	17	189	8	15	169	18	11	88	17	19	142	24
Total Analysis Volume [veh/h]	68	754	31	58	676	70	42	352	67	75	569	97
Pedestrian Volume [ped/h]	0			0			0			0		
Bicycle Volume [bicycles/h]	0			0			0			0		

Intersection Settings

Cycle Length [s]	100
Lost time [s]	10.00

Phasing & Timing

Control Type	Permiss	Permiss	Permiss	Permiss	Permiss	Permiss	Permiss	Permiss	Permiss	Permiss	Permiss	Permiss
Signal group	0	2	0	0	6	0	0	8	0	0	4	0
Auxiliary Signal Groups												
Lead / Lag	-	-	-	-	-	-	-	-	-	-	-	-

Movement, Approach, & Intersection Results

V/C, Movement V/C Ratio	0.04	0.24	0.02	0.04	0.21	0.04	0.03	0.12	0.04	0.05	0.20	0.06
Intersection LOS	A											
Intersection V/C	0.599											

Intersection Level Of Service Report

Intersection 25: Vincent Avenue (NS) at Rowland Avenue (EW)

Control Type:	Signalized	Delay (sec / veh):	-
Analysis Method:	ICU 1	Level Of Service:	A
Analysis Period:	15 minutes	Volume to Capacity (v/c):	0.545

Intersection Setup

Name	Vincent Avenue			Vincent Avenue			Rowland Avenue			Rowland Avenue		
Approach	Northbound			Southbound			Eastbound			Westbound		
Lane Configuration												
Turning Movement	Left	Thru	Right	Left	Thru	Right	Left	Thru	Right	Left	Thru	Right
Lane Width [ft]	12.00	12.00	12.00	12.00	12.00	12.00	12.00	12.00	12.00	12.00	12.00	12.00
No. of Lanes in Pocket	1	0	0	1	0	0	0	0	0	0	0	0
Pocket Length [ft]	145.00	100.00	100.00	125.00	100.00	100.00	100.00	100.00	100.00	100.00	100.00	100.00
Speed [mph]	35.00			40.00			35.00			35.00		
Grade [%]	0.00			0.00			0.00			0.00		
Crosswalk	Yes			Yes			Yes			Yes		

Volumes

Name	Vincent Avenue			Vincent Avenue			Rowland Avenue			Rowland Avenue		
Base Volume Input [veh/h]	34	712	55	36	756	12	32	133	41	119	131	62
Base Volume Adjustment Factor	1.0000	1.0000	1.0000	1.0000	1.0000	1.0000	1.0000	1.0000	1.0000	1.0000	1.0000	1.0000
Heavy Vehicles Percentage [%]	2.00	2.00	2.00	2.00	2.00	2.00	2.00	2.00	2.00	2.00	2.00	2.00
Growth Rate	1.01	1.01	1.01	1.01	1.01	1.01	1.01	1.01	1.01	1.01	1.01	1.01
In-Process Volume [veh/h]	0	0	0	0	0	0	0	0	0	0	0	0
Site-Generated Trips [veh/h]	0	50	0	1	7	1	5	0	0	0	0	5
Diverted Trips [veh/h]	0	0	0	0	0	0	0	0	0	0	0	0
Pass-by Trips [veh/h]	0	0	0	0	0	0	0	0	0	0	0	0
Existing Site Adjustment Volume [veh/h]	0	0	0	0	0	0	0	0	0	0	0	0
Other Volume [veh/h]	0	0	0	0	0	0	0	0	0	0	0	0
Total Hourly Volume [veh/h]	34	769	56	37	771	13	37	134	41	120	132	68
Peak Hour Factor	1.0000	1.0000	1.0000	1.0000	1.0000	1.0000	1.0000	1.0000	1.0000	1.0000	1.0000	1.0000
Other Adjustment Factor	1.0000	1.0000	1.0000	1.0000	1.0000	1.0000	1.0000	1.0000	1.0000	1.0000	1.0000	1.0000
Total 15-Minute Volume [veh/h]	9	192	14	9	193	3	9	34	10	30	33	17
Total Analysis Volume [veh/h]	34	769	56	37	771	13	37	134	41	120	132	68
Pedestrian Volume [ped/h]	0			0			0			0		
Bicycle Volume [bicycles/h]	0			0			0			0		

Intersection Settings

Cycle Length [s]	100
Lost time [s]	10.00

Phasing & Timing

Control Type	Protecte	Permiss	Permiss	Protecte	Permiss	Permiss	Permiss	Permiss	Permiss	Permiss	Permiss	Permiss
Signal group	5	2	0	1	6	0	0	8	0	0	4	0
Auxiliary Signal Groups												
Lead / Lag	Lead	-	-	Lead	-	-	-	-	-	-	-	-

Movement, Approach, & Intersection Results

V/C, Movement V/C Ratio	0.02	0.24	0.04	0.02	0.24	0.01	0.02	0.11	0.03	0.08	0.16	0.04
Intersection LOS	A											
Intersection V/C	0.545											

Intersection Level Of Service Report

Intersection 26: Vincent Avenue (NS) at Workman Avenue (EW)

Control Type:	Signalized	Delay (sec / veh):	-
Analysis Method:	ICU 1	Level Of Service:	B
Analysis Period:	15 minutes	Volume to Capacity (v/c):	0.617

Intersection Setup

Name	Vincent Avenue			Vincent Avenue			Workman Avenue			Workman Avenue		
Approach	Northbound			Southbound			Eastbound			Westbound		
Lane Configuration												
Turning Movement	Left	Thru	Right	Left	Thru	Right	Left	Thru	Right	Left	Thru	Right
Lane Width [ft]	12.00	12.00	12.00	12.00	12.00	12.00	12.00	12.00	12.00	12.00	12.00	12.00
No. of Lanes in Pocket	1	0	0	1	0	0	0	0	0	0	0	0
Pocket Length [ft]	120.00	100.00	100.00	180.00	100.00	100.00	100.00	100.00	100.00	100.00	100.00	100.00
Speed [mph]	35.00			40.00			35.00			35.00		
Grade [%]	0.00			0.00			0.00			0.00		
Crosswalk	Yes			Yes			Yes			Yes		

Volumes

Name	Vincent Avenue			Vincent Avenue			Workman Avenue			Workman Avenue		
Base Volume Input [veh/h]	67	675	110	42	816	61	21	137	49	131	188	74
Base Volume Adjustment Factor	1.0000	1.0000	1.0000	1.0000	1.0000	1.0000	1.0000	1.0000	1.0000	1.0000	1.0000	1.0000
Heavy Vehicles Percentage [%]	2.00	2.00	2.00	2.00	2.00	2.00	2.00	2.00	2.00	2.00	2.00	2.00
Growth Rate	1.01	1.01	1.01	1.01	1.01	1.01	1.01	1.01	1.01	1.01	1.01	1.01
In-Process Volume [veh/h]	0	0	0	0	0	0	0	0	0	0	0	0
Site-Generated Trips [veh/h]	0	50	0	0	7	0	0	0	0	0	0	0
Diverted Trips [veh/h]	0	0	0	0	0	0	0	0	0	0	0	0
Pass-by Trips [veh/h]	0	0	0	0	0	0	0	0	0	0	0	0
Existing Site Adjustment Volume [veh/h]	0	0	0	0	0	0	0	0	0	0	0	0
Other Volume [veh/h]	0	0	0	0	0	0	0	0	0	0	0	0
Total Hourly Volume [veh/h]	68	732	111	42	831	62	21	138	49	132	190	75
Peak Hour Factor	1.0000	1.0000	1.0000	1.0000	1.0000	1.0000	1.0000	1.0000	1.0000	1.0000	1.0000	1.0000
Other Adjustment Factor	1.0000	1.0000	1.0000	1.0000	1.0000	1.0000	1.0000	1.0000	1.0000	1.0000	1.0000	1.0000
Total 15-Minute Volume [veh/h]	17	183	28	11	208	16	5	35	12	33	48	19
Total Analysis Volume [veh/h]	68	732	111	42	831	62	21	138	49	132	190	75
Pedestrian Volume [ped/h]	0			0			0			0		
Bicycle Volume [bicycles/h]	0			0			0			0		

Intersection Settings

Cycle Length [s]	100
Lost time [s]	10.00

Phasing & Timing

Control Type	Protecte	Permiss	Permiss	Protecte	Permiss	Permiss	Permiss	Permiss	Permiss	Permiss	Permiss	Permiss
Signal group	5	2	0	1	6	0	0	8	0	0	4	0
Auxiliary Signal Groups												
Lead / Lag	Lead	-	-	Lead	-	-	-	-	-	-	-	-

Movement, Approach, & Intersection Results

V/C, Movement V/C Ratio	0.04	0.23	0.07	0.03	0.26	0.04	0.01	0.10	0.03	0.08	0.20	0.05
Intersection LOS	B											
Intersection V/C	0.617											

Intersection Level Of Service Report
Intersection 27: Vincent Avenue (NS) at I-10 WB Ramps (EW)

Control Type:	Signalized	Delay (sec / veh):	-
Analysis Method:	ICU 1	Level Of Service:	A
Analysis Period:	15 minutes	Volume to Capacity (v/c):	0.458

Intersection Setup

Name	Vincent Avenue		Vincent Avenue		I-10 WB Ramps	
Approach	Northbound		Southbound		Westbound	
Lane Configuration						
Turning Movement	Thru	Right	Left	Thru	Left	Right
Lane Width [ft]	12.00	12.00	12.00	12.00	12.00	12.00
No. of Lanes in Pocket	0	0	0	0	0	1
Pocket Length [ft]	100.00	100.00	100.00	100.00	100.00	220.00
Speed [mph]	35.00		35.00		35.00	
Grade [%]	0.00		0.00		0.00	
Crosswalk	No		No		Yes	

Volumes

Name	Vincent Avenue		Vincent Avenue		I-10 WB Ramps	
Base Volume Input [veh/h]	741	0	0	1011	393	194
Base Volume Adjustment Factor	1.0000	1.0000	1.0000	1.0000	1.0000	1.0000
Heavy Vehicles Percentage [%]	2.00	2.00	2.00	2.00	2.00	2.00
Growth Rate	1.01	1.00	1.00	1.01	1.01	1.01
In-Process Volume [veh/h]	0	0	0	0	0	0
Site-Generated Trips [veh/h]	16	0	0	7	0	34
Diverted Trips [veh/h]	0	0	0	0	0	0
Pass-by Trips [veh/h]	0	0	0	0	0	0
Existing Site Adjustment Volume [veh/h]	0	0	0	0	0	0
Other Volume [veh/h]	0	0	0	0	0	0
Total Hourly Volume [veh/h]	764	0	0	1028	397	230
Peak Hour Factor	1.0000	1.0000	1.0000	1.0000	1.0000	1.0000
Other Adjustment Factor	1.0000	1.0000	1.0000	1.0000	1.0000	1.0000
Total 15-Minute Volume [veh/h]	191	0	0	257	99	58
Total Analysis Volume [veh/h]	764	0	0	1028	397	230
Pedestrian Volume [ped/h]	0		0		0	
Bicycle Volume [bicycles/h]	0		0		0	

Intersection Settings

Cycle Length [s]	100
Lost time [s]	10.00

Phasing & Timing

Control Type	Permissive	Permissive	Permissive	Permissive	Split	Split
Signal group	2	0	0	6	7	0
Auxiliary Signal Groups						
Lead / Lag	-	-	-	-	Lead	-

Movement, Approach, & Intersection Results

V/C, Movement V/C Ratio	0.16	0.00	0.00	0.21	0.12	0.14
Intersection LOS	A					
Intersection V/C	0.458					

Intersection Level Of Service Report
Intersection 28: Vincent Avenue (NS) at I-10 EB Ramps (EW)

Control Type:	Signalized	Delay (sec / veh):	-
Analysis Method:	ICU 1	Level Of Service:	A
Analysis Period:	15 minutes	Volume to Capacity (v/c):	0.496

Intersection Setup

Name	Vincent Avenue			Vincent Avenue			I-10 EB Ramps			I-10 EB Ramps		
Approach	Northbound			Southbound			Eastbound			Westbound		
Lane Configuration												
Turning Movement	Left	Thru	Right	Left	Thru	Right	Left	Thru	Right	Left	Thru	Right
Lane Width [ft]	12.00	12.00	12.00	12.00	12.00	12.00	12.00	12.00	12.00	12.00	12.00	12.00
No. of Lanes in Pocket	0	0	0	0	0	0	0	0	0	0	0	0
Pocket Length [ft]	100.00	100.00	100.00	100.00	100.00	100.00	100.00	100.00	100.00	100.00	100.00	100.00
Speed [mph]	35.00			35.00			35.00			35.00		
Grade [%]	0.00			0.00			0.00			0.00		
Crosswalk	No			No			Yes			Yes		

Volumes

Name	Vincent Avenue			Vincent Avenue			I-10 EB Ramps			I-10 EB Ramps		
Base Volume Input [veh/h]	0	527	656	0	1045	358	217	0	243	0	0	0
Base Volume Adjustment Factor	1.0000	1.0000	1.0000	1.0000	1.0000	1.0000	1.0000	1.0000	1.0000	1.0000	1.0000	1.0000
Heavy Vehicles Percentage [%]	2.00	2.00	2.00	2.00	2.00	2.00	2.00	2.00	2.00	2.00	2.00	2.00
Growth Rate	1.00	1.01	1.01	1.00	1.01	1.01	1.01	1.00	1.01	1.00	1.00	1.00
In-Process Volume [veh/h]	0	0	0	0	0	0	0	0	0	0	0	0
Site-Generated Trips [veh/h]	0	0	0	1	0	4	16	0	0	0	0	0
Diverted Trips [veh/h]	0	0	0	0	0	0	0	0	0	0	0	0
Pass-by Trips [veh/h]	0	0	0	0	0	0	0	0	0	0	0	0
Existing Site Adjustment Volume [veh/h]	0	0	0	0	0	0	0	0	0	0	0	0
Other Volume [veh/h]	0	0	0	0	0	0	0	0	0	0	0	0
Total Hourly Volume [veh/h]	0	532	663	1	1055	366	235	0	245	0	0	0
Peak Hour Factor	1.0000	1.0000	1.0000	1.0000	1.0000	1.0000	1.0000	1.0000	1.0000	1.0000	1.0000	1.0000
Other Adjustment Factor	1.0000	1.0000	1.0000	1.0000	1.0000	1.0000	1.0000	1.0000	1.0000	1.0000	1.0000	1.0000
Total 15-Minute Volume [veh/h]	0	133	166	0	264	92	59	0	61	0	0	0
Total Analysis Volume [veh/h]	0	532	663	1	1055	366	235	0	245	0	0	0
Pedestrian Volume [ped/h]	0			0			0			0		
Bicycle Volume [bicycles/h]	0			0			0			0		

Intersection Settings

Cycle Length [s]	100
Lost time [s]	10.00

Phasing & Timing

Control Type	Permiss	Permiss	Permiss	Permiss	Permiss	Permiss	Split	Permiss	Split	Permiss	Permiss	Permiss
Signal group	0	2	0	0	6	0	3	0	0	0	0	0
Auxiliary Signal Groups												
Lead / Lag	-	-	-	-	-	-	Lead	-	-	-	-	-

Movement, Approach, & Intersection Results

V/C, Movement V/C Ratio	0.00	0.25	0.25	0.00	0.22	0.23	0.15	0.00	0.08	0.00	0.00	0.00
Intersection LOS	A											
Intersection V/C	0.496											

Intersection Level Of Service Report

Intersection 29: Vernon Ave/Lark Ellen Ave (NS) at Gladstone Street (EW)

Control Type:	Signalized	Delay (sec / veh):	-
Analysis Method:	ICU 1	Level Of Service:	C
Analysis Period:	15 minutes	Volume to Capacity (v/c):	0.711

Intersection Setup

Name	Lark Ellen Avenue			Vernon Avenue			Gladstone Street			Gladstone Street		
Approach	Northbound			Southbound			Eastbound			Westbound		
Lane Configuration												
Turning Movement	Left	Thru	Right	Left	Thru	Right	Left	Thru	Right	Left	Thru	Right
Lane Width [ft]	12.00	12.00	12.00	12.00	12.00	12.00	12.00	12.00	12.00	12.00	12.00	12.00
No. of Lanes in Pocket	1	0	0	1	0	0	1	0	0	1	0	0
Pocket Length [ft]	60.00	100.00	100.00	60.00	100.00	100.00	70.00	100.00	100.00	60.00	100.00	100.00
Speed [mph]	35.00			35.00			45.00			45.00		
Grade [%]	0.00			0.00			0.00			0.00		
Crosswalk	Yes			Yes			Yes			Yes		

Volumes

Name	Lark Ellen Avenue			Vernon Avenue			Gladstone Street			Gladstone Street		
Base Volume Input [veh/h]	76	423	178	23	426	88	51	198	32	150	825	39
Base Volume Adjustment Factor	1.0000	1.0000	1.0000	1.0000	1.0000	1.0000	1.0000	1.0000	1.0000	1.0000	1.0000	1.0000
Heavy Vehicles Percentage [%]	2.00	2.00	2.00	2.00	2.00	2.00	2.00	2.00	2.00	2.00	2.00	2.00
Growth Rate	1.01	1.01	1.01	1.01	1.01	1.01	1.01	1.01	1.01	1.01	1.01	1.01
In-Process Volume [veh/h]	0	0	0	0	0	0	0	0	0	0	0	0
Site-Generated Trips [veh/h]	0	0	0	0	0	30	4	10	0	0	72	0
Diverted Trips [veh/h]	0	0	0	0	0	0	0	0	0	0	0	0
Pass-by Trips [veh/h]	0	0	0	0	0	0	0	0	0	0	0	0
Existing Site Adjustment Volume [veh/h]	0	0	0	0	0	0	0	0	0	0	0	0
Other Volume [veh/h]	0	0	0	0	0	0	0	0	0	0	0	0
Total Hourly Volume [veh/h]	77	427	180	23	430	119	56	210	32	152	905	39
Peak Hour Factor	1.0000	1.0000	1.0000	1.0000	1.0000	1.0000	1.0000	1.0000	1.0000	1.0000	1.0000	1.0000
Other Adjustment Factor	1.0000	1.0000	1.0000	1.0000	1.0000	1.0000	1.0000	1.0000	1.0000	1.0000	1.0000	1.0000
Total 15-Minute Volume [veh/h]	19	107	45	6	108	30	14	53	8	38	226	10
Total Analysis Volume [veh/h]	77	427	180	23	430	119	56	210	32	152	905	39
Pedestrian Volume [ped/h]	0			0			0			0		
Bicycle Volume [bicycles/h]	0			0			0			0		

Intersection Settings

Cycle Length [s]	100
Lost time [s]	10.00

Phasing & Timing

Control Type	Permiss	Permiss	Permiss	Permiss	Permiss	Permiss	Permiss	Permiss	Permiss	Permiss	Permiss	Permiss
Signal group	0	2	0	0	6	0	0	8	0	0	4	0
Auxiliary Signal Groups												
Lead / Lag	-	-	-	-	-	-	-	-	-	-	-	-

Movement, Approach, & Intersection Results

V/C, Movement V/C Ratio	0.05	0.27	0.11	0.01	0.17	0.17	0.04	0.08	0.08	0.10	0.30	0.30
Intersection LOS	C											
Intersection V/C	0.711											

Intersection Level Of Service Report
Intersection 30: Azusa Avenue (NS) at I-210 EB Ramps (EW)

Control Type:	Signalized	Delay (sec / veh):	-
Analysis Method:	ICU 1	Level Of Service:	B
Analysis Period:	15 minutes	Volume to Capacity (v/c):	0.667

Intersection Setup

Name	Azusa Avenue		Azusa Avenue		I-210 EB Ramps	
Approach	Northbound		Southbound		Eastbound	
Lane Configuration						
Turning Movement	Left	Thru	Thru	Right	Left	Right
Lane Width [ft]	12.00	12.00	12.00	12.00	12.00	12.00
No. of Lanes in Pocket	0	0	0	0	0	0
Pocket Length [ft]	100.00	100.00	100.00	100.00	100.00	100.00
Speed [mph]	35.00		35.00		35.00	
Grade [%]	0.00		0.00		0.00	
Crosswalk	No		No		Yes	

Volumes

Name	Azusa Avenue		Azusa Avenue		I-210 EB Ramps	
Base Volume Input [veh/h]	0	1128	627	0	193	331
Base Volume Adjustment Factor	1.0000	1.0000	1.0000	1.0000	1.0000	1.0000
Heavy Vehicles Percentage [%]	2.00	2.00	2.00	2.00	2.00	2.00
Growth Rate	1.00	1.01	1.01	1.00	1.01	1.01
In-Process Volume [veh/h]	0	0	0	0	0	0
Site-Generated Trips [veh/h]	0	8	59	0	0	0
Diverted Trips [veh/h]	0	0	0	0	0	0
Pass-by Trips [veh/h]	0	0	0	0	0	0
Existing Site Adjustment Volume [veh/h]	0	0	0	0	0	0
Other Volume [veh/h]	0	0	0	0	0	0
Total Hourly Volume [veh/h]	0	1147	692	0	195	334
Peak Hour Factor	1.0000	1.0000	1.0000	1.0000	1.0000	1.0000
Other Adjustment Factor	1.0000	1.0000	1.0000	1.0000	1.0000	1.0000
Total 15-Minute Volume [veh/h]	0	287	173	0	49	84
Total Analysis Volume [veh/h]	0	1147	692	0	195	334
Pedestrian Volume [ped/h]	0		0		0	
Bicycle Volume [bicycles/h]	0		0		0	

Intersection Settings

Cycle Length [s]	100
Lost time [s]	10.00

Phasing & Timing

Control Type	Permissive	Permissive	Permissive	Permissive	Split	Split
Signal group	0	2	6	0	3	0
Auxiliary Signal Groups						
Lead / Lag	-	-	-	-	Lead	-

Movement, Approach, & Intersection Results

V/C, Movement V/C Ratio	0.00	0.36	0.22	0.00	0.06	0.21
Intersection LOS	B					
Intersection V/C	0.667					

Intersection Level Of Service Report

Intersection 31: Azusa Avenue (NS) at Paramount Street (EW)

Control Type:	Signalized	Delay (sec / veh):	-
Analysis Method:	ICU 1	Level Of Service:	B
Analysis Period:	15 minutes	Volume to Capacity (v/c):	0.611

Intersection Setup

Name	Azusa Avenue			Azusa Avenue			Paramount Street			Paramount Street		
Approach	Northbound			Southbound			Eastbound			Westbound		
Lane Configuration												
Turning Movement	Left	Thru	Right	Left	Thru	Right	Left	Thru	Right	Left	Thru	Right
Lane Width [ft]	12.00	12.00	12.00	12.00	12.00	12.00	12.00	12.00	12.00	12.00	12.00	12.00
No. of Lanes in Pocket	1	0	0	1	0	0	0	0	0	0	0	0
Pocket Length [ft]	200.00	100.00	100.00	110.00	100.00	100.00	100.00	100.00	100.00	100.00	100.00	100.00
Speed [mph]	35.00			35.00			25.00			15.00		
Grade [%]	0.00			0.00			0.00			0.00		
Crosswalk	No			Yes			Yes			Yes		

Volumes

Name	Azusa Avenue			Azusa Avenue			Paramount Street			Paramount Street		
Base Volume Input [veh/h]	127	936	0	11	819	75	162	0	79	2	0	8
Base Volume Adjustment Factor	1.0000	1.0000	1.0000	1.0000	1.0000	1.0000	1.0000	1.0000	1.0000	1.0000	1.0000	1.0000
Heavy Vehicles Percentage [%]	2.00	2.00	2.00	2.00	2.00	2.00	2.00	2.00	2.00	2.00	2.00	2.00
Growth Rate	1.01	1.01	1.01	1.01	1.01	1.01	1.01	1.01	1.01	1.01	1.01	1.01
In-Process Volume [veh/h]	0	0	0	0	0	0	0	0	0	0	0	0
Site-Generated Trips [veh/h]	0	8	0	0	59	0	0	0	0	0	0	0
Diverted Trips [veh/h]	0	0	0	0	0	0	0	0	0	0	0	0
Pass-by Trips [veh/h]	0	0	0	0	0	0	0	0	0	0	0	0
Existing Site Adjustment Volume [veh/h]	0	0	0	0	0	0	0	0	0	0	0	0
Other Volume [veh/h]	0	0	0	0	0	0	0	0	0	0	0	0
Total Hourly Volume [veh/h]	128	953	0	11	886	76	164	0	80	2	0	8
Peak Hour Factor	1.0000	1.0000	1.0000	1.0000	1.0000	1.0000	1.0000	1.0000	1.0000	1.0000	1.0000	1.0000
Other Adjustment Factor	1.0000	1.0000	1.0000	1.0000	1.0000	1.0000	1.0000	1.0000	1.0000	1.0000	1.0000	1.0000
Total 15-Minute Volume [veh/h]	32	238	0	3	222	19	41	0	20	1	0	2
Total Analysis Volume [veh/h]	128	953	0	11	886	76	164	0	80	2	0	8
Pedestrian Volume [ped/h]	0			0			0			0		
Bicycle Volume [bicycles/h]	0			0			0			0		

Intersection Settings

Cycle Length [s]	100
Lost time [s]	10.00

Phasing & Timing

Control Type	Permiss	Permiss	Permiss	Permiss	Permiss	Permiss	Permiss	Permiss	Permiss	Permiss	Permiss	Permiss
Signal group	0	2	0	0	6	0	0	8	0	0	4	0
Auxiliary Signal Groups												
Lead / Lag	-	-	-	-	-	-	-	-	-	-	-	-

Movement, Approach, & Intersection Results

V/C, Movement V/C Ratio	0.08	0.30	0.00	0.01	0.28	0.05	0.10	0.00	0.15	0.00	0.00	0.01
Intersection LOS	B											
Intersection V/C	0.611											

Intersection Level Of Service Report
Intersection 32: Azusa Avenue (NS) at Gladstone Street (EW)

Control Type:	Signalized	Delay (sec / veh):	-
Analysis Method:	ICU 1	Level Of Service:	C
Analysis Period:	15 minutes	Volume to Capacity (v/c):	0.760

Intersection Setup

Name	Azusa Avenue			Azusa Avenue			Gladstone Street			Gladstone Street		
Approach	Northbound			Southbound			Eastbound			Westbound		
Lane Configuration												
Turning Movement	Left	Thru	Right	Left	Thru	Right	Left	Thru	Right	Left	Thru	Right
Lane Width [ft]	12.00	12.00	12.00	12.00	12.00	12.00	12.00	12.00	12.00	12.00	12.00	12.00
No. of Lanes in Pocket	1	0	1	2	0	0	1	0	0	1	0	0
Pocket Length [ft]	190.00	100.00	190.00	190.00	100.00	100.00	150.00	100.00	100.00	150.00	100.00	100.00
Speed [mph]	35.00			35.00			40.00			40.00		
Grade [%]	0.00			0.00			0.00			0.00		
Crosswalk	Yes			Yes			Yes			Yes		

Volumes

Name	Azusa Avenue			Azusa Avenue			Gladstone Street			Gladstone Street		
Base Volume Input [veh/h]	113	668	64	119	631	82	117	243	41	139	738	93
Base Volume Adjustment Factor	1.0000	1.0000	1.0000	1.0000	1.0000	1.0000	1.0000	1.0000	1.0000	1.0000	1.0000	1.0000
Heavy Vehicles Percentage [%]	2.00	2.00	2.00	2.00	2.00	2.00	2.00	2.00	2.00	2.00	2.00	2.00
Growth Rate	1.01	1.01	1.01	1.01	1.01	1.01	1.01	1.01	1.01	1.01	1.01	1.01
In-Process Volume [veh/h]	0	0	0	0	0	0	0	0	0	0	0	0
Site-Generated Trips [veh/h]	0	0	0	0	0	59	8	2	0	0	13	0
Diverted Trips [veh/h]	0	0	0	0	0	0	0	0	0	0	0	0
Pass-by Trips [veh/h]	0	0	0	0	0	0	0	0	0	0	0	0
Existing Site Adjustment Volume [veh/h]	0	0	0	0	0	0	0	0	0	0	0	0
Other Volume [veh/h]	0	0	0	0	0	0	0	0	0	0	0	0
Total Hourly Volume [veh/h]	114	675	65	120	637	142	126	247	41	140	758	94
Peak Hour Factor	1.0000	1.0000	1.0000	1.0000	1.0000	1.0000	1.0000	1.0000	1.0000	1.0000	1.0000	1.0000
Other Adjustment Factor	1.0000	1.0000	1.0000	1.0000	1.0000	1.0000	1.0000	1.0000	1.0000	1.0000	1.0000	1.0000
Total 15-Minute Volume [veh/h]	29	169	16	30	159	36	32	62	10	35	190	24
Total Analysis Volume [veh/h]	114	675	65	120	637	142	126	247	41	140	758	94
Pedestrian Volume [ped/h]	0			0			0			0		
Bicycle Volume [bicycles/h]	0			0			0			0		

Intersection Settings

Cycle Length [s]	100
Lost time [s]	10.00

Phasing & Timing

Control Type	Protecte	Permiss	Overlap	Protecte	Permiss	Permiss	Protecte	Permiss	Permiss	Protecte	Permiss	Permiss
Signal group	5	2	2	1	6	0	3	8	0	7	4	0
Auxiliary Signal Groups			2,7									
Lead / Lag	Lead	-	-	Lead	-	-	Lead	-	-	Lead	-	-

Movement, Approach, & Intersection Results

V/C, Movement V/C Ratio	0.07	0.21	0.00	0.04	0.24	0.24	0.08	0.09	0.09	0.09	0.27	0.27
Intersection LOS	C											
Intersection V/C	0.760											

Intersection Level Of Service Report

Intersection 33: San Gabriel Ave/Azusa Ave (NS) at 1st St (EW)

Control Type:	Signalized	Delay (sec / veh):	-
Analysis Method:	ICU 1	Level Of Service:	B
Analysis Period:	15 minutes	Volume to Capacity (v/c):	0.696

Intersection Setup

Name												
Approach	Northbound			Southbound			Eastbound			Westbound		
Lane Configuration												
Turning Movement	Left	Thru	Right	Left	Thru	Right	Left	Thru	Right	Left	Thru	Right
Lane Width [ft]	12.00	12.00	12.00	12.00	12.00	12.00	12.00	12.00	12.00	12.00	12.00	12.00
No. of Lanes in Pocket	0	0	0	0	0	0	0	0	0	0	0	0
Pocket Length [ft]	100.00	100.00	100.00	100.00	100.00	100.00	100.00	100.00	100.00	100.00	100.00	100.00
Speed [mph]	35.00			35.00			35.00			35.00		
Grade [%]	0.00			0.00			0.00			0.00		
Crosswalk	No			Yes			Yes			Yes		

Volumes

Name												
Base Volume Input [veh/h]	86	516	410	72	826	31	38	82	76	369	252	161
Base Volume Adjustment Factor	1.0000	1.0000	1.0000	1.0000	1.0000	1.0000	1.0000	1.0000	1.0000	1.0000	1.0000	1.0000
Heavy Vehicles Percentage [%]	2.00	2.00	2.00	2.00	2.00	2.00	2.00	2.00	2.00	2.00	2.00	2.00
Growth Rate	1.06	1.06	1.06	1.06	1.06	1.06	1.06	1.06	1.06	1.06	1.06	1.06
In-Process Volume [veh/h]	0	0	0	0	0	0	0	0	0	0	0	0
Site-Generated Trips [veh/h]	0	0	0	0	0	0	0	0	0	59	0	0
Diverted Trips [veh/h]	0	0	0	0	0	0	0	0	0	0	0	0
Pass-by Trips [veh/h]	0	0	0	0	0	0	0	0	0	0	0	0
Existing Site Adjustment Volume [veh/h]	0	0	0	0	0	0	0	0	0	0	0	0
Other Volume [veh/h]	0	0	0	0	0	0	0	0	0	0	0	0
Total Hourly Volume [veh/h]	91	547	435	76	876	33	40	87	81	450	267	171
Peak Hour Factor	0.9080	0.9080	0.9080	0.9080	0.9080	0.9080	0.9080	0.9080	0.9080	0.9080	0.9080	0.9080
Other Adjustment Factor	1.0000	1.0000	1.0000	1.0000	1.0000	1.0000	1.0000	1.0000	1.0000	1.0000	1.0000	1.0000
Total 15-Minute Volume [veh/h]	25	151	120	21	241	9	11	24	22	124	74	47
Total Analysis Volume [veh/h]	100	602	479	84	965	36	44	96	89	496	294	188
Pedestrian Volume [ped/h]	0			0			0			0		
Bicycle Volume [bicycles/h]	0			0			0			0		

Intersection Settings

Cycle Length [s]	100
Lost time [s]	10.00

Phasing & Timing

Control Type	Protecte	Permiss	Permiss	Protecte	Permiss	Permiss	Protecte	Permiss	Permiss	Protecte	Permiss	Permiss
Signal group	5	2	0	1	6	0	3	8	0	7	4	0
Auxiliary Signal Groups												
Lead / Lag	Lead	-	-	Lead	-	-	Lead	-	-	Lead	-	-

Movement, Approach, & Intersection Results

V/C, Movement V/C Ratio	0.06	0.19	0.30	0.05	0.30	0.02	0.03	0.06	0.06	0.16	0.15	0.15
Intersection LOS	B											
Intersection V/C	0.696											

Intersection Level Of Service Report

Intersection 34: Alameda Ave/I-210 WB Ramps NS) at 1st St (EW)

Control Type:	Signalized	Delay (sec / veh):	-
Analysis Method:	ICU 1	Level Of Service:	E
Analysis Period:	15 minutes	Volume to Capacity (v/c):	0.952

Intersection Setup

Name												
Approach	Northbound			Southbound			Eastbound			Westbound		
Lane Configuration												
Turning Movement	Left	Thru	Right	Left	Thru	Right	Left	Thru	Right	Left	Thru	Right
Lane Width [ft]	12.00	12.00	12.00	12.00	12.00	12.00	12.00	12.00	12.00	12.00	12.00	12.00
No. of Lanes in Pocket	1	0	0	1	0	1	1	0	1	1	0	1
Pocket Length [ft]	325.00	100.00	100.00	50.00	100.00	150.00	55.00	100.00	100.00	100.00	100.00	110.00
Speed [mph]	35.00			35.00			35.00			35.00		
Grade [%]	0.00			0.00			0.00			0.00		
Crosswalk	Yes			Yes			Yes			Yes		

Volumes

Name												
Base Volume Input [veh/h]	111	14	7	41	112	64	8	239	388	580	465	44
Base Volume Adjustment Factor	1.0000	1.0000	1.0000	1.0000	1.0000	1.0000	1.0000	1.0000	1.0000	1.0000	1.0000	1.0000
Heavy Vehicles Percentage [%]	2.00	2.00	2.00	2.00	2.00	2.00	2.00	2.00	2.00	2.00	2.00	2.00
Growth Rate	1.02	1.02	1.02	1.02	1.02	1.02	1.02	1.02	1.02	1.02	1.02	1.02
In-Process Volume [veh/h]	0	0	0	0	0	0	0	0	0	0	0	0
Site-Generated Trips [veh/h]	59	0	0	0	0	0	0	0	0	0	0	0
Diverted Trips [veh/h]	0	0	0	0	0	0	0	0	0	0	0	0
Pass-by Trips [veh/h]	0	0	0	0	0	0	0	0	0	0	0	0
Existing Site Adjustment Volume [veh/h]	0	0	0	0	0	0	0	0	0	0	0	0
Other Volume [veh/h]	0	0	0	0	0	0	0	0	0	0	0	0
Total Hourly Volume [veh/h]	172	14	7	42	114	65	8	244	396	592	474	45
Peak Hour Factor	0.9350	0.9350	0.9350	0.9350	0.9350	0.9350	0.9350	0.9350	0.9350	0.9350	0.9350	0.9350
Other Adjustment Factor	1.0000	1.0000	1.0000	1.0000	1.0000	1.0000	1.0000	1.0000	1.0000	1.0000	1.0000	1.0000
Total 15-Minute Volume [veh/h]	46	4	2	11	30	17	2	65	106	158	127	12
Total Analysis Volume [veh/h]	184	15	7	45	122	70	9	261	424	633	507	48
Pedestrian Volume [ped/h]	0			0			0			0		
Bicycle Volume [bicycles/h]	0			0			0			0		

Intersection Settings

Cycle Length [s]	100
Lost time [s]	10.00

Phasing & Timing

Control Type	Permiss	Permiss	Permiss	Permiss	Permiss	Permiss	Permiss	Permiss	Permiss	Permiss	Permiss	Permiss
Signal group	0	2	0	0	6	0	0	8	0	0	4	0
Auxiliary Signal Groups												
Lead / Lag	-	-	-	-	-	-	-	-	-	-	-	-

Movement, Approach, & Intersection Results

V/C, Movement V/C Ratio	0.12	0.01	0.01	0.03	0.08	0.04	0.01	0.08	0.27	0.40	0.32	0.03
Intersection LOS	E											
Intersection V/C	0.952											

Vincent Avenue Industrial Building

Vistro File: G:\...\PMC.vistro
Report File: G:\...\FBP PM.pdf

Scenario 2 Future Baseline With Project
5/6/2020

Intersection Analysis Summary

ID	Intersection Name	Control Type	Method	Worst Mvmt	V/C	Delay (s/veh)	LOS
1	I-605 SB On Ramp (NS) at Live Oak Avenue (EW)	Signalized	ICU 1	WB Left	0.841	-	D
2	I-605 NB Ramps (NS) at Live Oak Avenue (EW)	Two-way stop	HCM 6th Edition	NB Right	1.262	157.8	F
3	Graham Road (NS) at Live Oak Avenue (EW)	Signalized	ICU 1	WB Thru	0.598	-	A
4	Rivergrade Road (NS) at Live Oak Avenue (EW)	Signalized	ICU 1	EB Thru	0.889	-	D
5	Stewart Avenue (NS) at Live Oak Avenue (EW)	Signalized	ICU 1	EB Thru	0.769	-	C
6	Baldwin Park Boulevard (NS) at Live Oak Avenue (EW)	Signalized	ICU 1	EB Thru	0.710	-	C
7	Arrow Highway (NS) at Live Oak Ave/Arrow Hwy (EW)	Signalized	ICU 1	EB Thru	0.902	-	E
8	Maine Avenue (NS) at Arrow Highway (EW)	Signalized	ICU 1	EB Thru	0.820	-	D
9	Santa Fe Dam/Azusa Canyon Road (NS) at Arrow Highway (EW)	Signalized	ICU 1	EB Thru	0.915	-	E
10	4th Street (NS) at Arrow Highway (EW)	Signalized	ICU 1	EB Thru	0.559	-	A
11	Irwindale Avenue (NS) at I-210 WB Ramps (EW)	Signalized	ICU 1	SB Thru	0.540	-	A
12	Irwindale Avenue (NS) at I-210 EB Ramps (EW)	Signalized	ICU 1	NB Thru	0.766	-	C
13	Irwindale Avenue (NS) at Jardin De Roca/Irwindale Rd (EW)	Signalized	ICU 1	NB Thru	0.706	-	C
14	Irwindale Avenue (NS) at 1st Street (EW)	Signalized	ICU 1	NB Thru	0.461	-	A
15	Irwindale Avenue (NS) at Gladstone Street (EW)	Signalized	ICU 1	SB Thru	0.654	-	B
16	Irwindale Avenue (NS) at Arrow Highway (EW)	Signalized	ICU 1	EB Thru	0.769	-	C
17	Vincent Avenue (NS) at	Signalized	ICU 1	NB Right	0.911		F

17	Gladstone Street (EW)	Signalized	ICU 1	NB Right	0.911	-	E
18	Vincent Avenue (NS) at Arrow Highway (EW)	Signalized	ICU 1	EB Thru	0.865	-	D
19	Vincent Avenue (NS) at Project North Driveway (EW)	Two-way stop	HCM 6th Edition	EB Left	0.353	17.3	C
20	Vincent Avenue (NS) at Project South Driveway (EW)	Two-way stop	HCM 6th Edition	EB Left	0.299	16.2	C
21	Vincent Avenue (NS) at Cypress Street (EW)	Signalized	ICU 1	EB Thru	0.734	-	C
22	Vincent Avenue (NS) at San Bernardino Road (EW)	Signalized	ICU 1	EB Right	0.679	-	B
23	Vincent Avenue (NS) at Badillo Street (EW)	Signalized	ICU 1	EB Thru	0.780	-	C
24	Vincent Avenue (NS) at Puente Avenue (EW)	Signalized	ICU 1	SB Thru	0.650	-	B
25	Vincent Avenue (NS) at Rowland Avenue (EW)	Signalized	ICU 1	SB Thru	0.615	-	B
26	Vincent Avenue (NS) at Workman Avenue (EW)	Signalized	ICU 1	NB Thru	0.693	-	B
27	Vincent Avenue (NS) at I-10 WB Ramps (EW)	Signalized	ICU 1	SB Thru	0.461	-	A
28	Vincent Avenue (NS) at I-10 EB Ramps (EW)	Signalized	ICU 1	NB Thru	0.542	-	A
29	Vernon Ave/Lark Ellen Ave (NS) at Gladstone Street (EW)	Signalized	ICU 1	EB Thru	0.752	-	C
30	Azusa Avenue (NS) at I-210 EB Ramps (EW)	Signalized	ICU 1	NB Thru	0.676	-	B
31	Azusa Avenue (NS) at Paramount Street (EW)	Signalized	ICU 1	SB Thru	0.639	-	B
32	Azusa Avenue (NS) at Gladstone Street (EW)	Signalized	ICU 1	EB Thru	0.743	-	C
33	San Gabriel Ave/Azusa Ave (NS) at 1st St (EW)	Signalized	ICU 1	SB Thru	0.672	-	B
34	Alameda Ave/I-210 WB Ramps (NS) at 1st St (EW)	Signalized	ICU 1	NB Left	0.704	-	C

V/C, Delay, LOS: For two-way stop, these values are taken from the movement with the worst (highest) delay value. For all other control types, they are taken for the whole intersection.

Intersection Level Of Service Report
Intersection 1: I-605 SB On Ramp (NS) at Live Oak Avenue (EW)

Control Type:	Signalized	Delay (sec / veh):	-
Analysis Method:	ICU 1	Level Of Service:	D
Analysis Period:	15 minutes	Volume to Capacity (v/c):	0.841

Intersection Setup

Name	I-605 SB On Ramps				Live Oak Avenue	
Approach	Northbound		Eastbound		Westbound	
Lane Configuration						
Turning Movement	Left	Right	Thru	Right	Left	Thru
Lane Width [ft]	12.00	12.00	12.00	12.00	12.00	12.00
No. of Lanes in Pocket	0	0	0	0	1	0
Pocket Length [ft]	100.00	100.00	100.00	100.00	365.00	100.00
Speed [mph]	35.00		35.00		45.00	
Grade [%]	0.00		0.00		0.00	
Crosswalk	Yes		No		No	

Volumes

Name	I-605 SB On Ramps				Live Oak Avenue	
Base Volume Input [veh/h]	0	0	1049	1114	557	884
Base Volume Adjustment Factor	1.0000	1.0000	1.0000	0.0000	1.0000	1.0000
Heavy Vehicles Percentage [%]	2.00	2.00	2.00	2.00	2.00	2.00
Growth Rate	1.00	1.00	1.01	1.01	1.01	1.01
In-Process Volume [veh/h]	0	0	0	0	0	0
Site-Generated Trips [veh/h]	0	0	0	0	93	0
Diverted Trips [veh/h]	0	0	0	0	0	0
Pass-by Trips [veh/h]	0	0	0	0	0	0
Existing Site Adjustment Volume [veh/h]	0	0	0	0	0	0
Other Volume [veh/h]	0	0	0	0	0	0
Total Hourly Volume [veh/h]	0	0	1059	0	656	893
Peak Hour Factor	1.0000	1.0000	1.0000	1.0000	1.0000	1.0000
Other Adjustment Factor	1.0000	1.0000	1.0000	0.0000	1.0000	1.0000
Total 15-Minute Volume [veh/h]	0	0	265	0	164	223
Total Analysis Volume [veh/h]	0	0	1059	0	656	893
Pedestrian Volume [ped/h]	0		0		0	
Bicycle Volume [bicycles/h]	0		0		0	

Intersection Settings

Cycle Length [s]	100
Lost time [s]	10.00

Phasing & Timing

Control Type	Permissive	Permissive	Permissive	Permissive	Protected	Permissive
Signal group	0	0	2	0	1	6
Auxiliary Signal Groups						
Lead / Lag	-	-	-	-	Lead	-

Movement, Approach, & Intersection Results

V/C, Movement V/C Ratio	0.00	0.00	0.33	0.00	0.41	0.28
Intersection LOS	D					
Intersection V/C	0.841					

Intersection Level Of Service Report
Intersection 2: I-605 NB Ramps (NS) at Live Oak Avenue (EW)

Control Type:	Two-way stop	Delay (sec / veh):	157.8
Analysis Method:	HCM 6th Edition	Level Of Service:	F
Analysis Period:	15 minutes	Volume to Capacity (v/c):	1.262

Intersection Setup

Name	I-605 NB Ramps			I-605 NB Ramps			Live Oak Avenue			Live Oak Avenue		
Approach	Northbound			Southbound			Eastbound			Westbound		
Lane Configuration												
Turning Movement	Left	Thru	Right	Left	Thru	Right	Left	Thru	Right	Left	Thru	Right
Lane Width [ft]	12.00	12.00	12.00	12.00	12.00	12.00	12.00	12.00	12.00	12.00	12.00	12.00
No. of Lanes in Pocket	0	0	0	0	0	0	0	0	0	0	0	0
Pocket Length [ft]	100.00	100.00	100.00	100.00	100.00	100.00	100.00	100.00	100.00	100.00	100.00	100.00
Speed [mph]	35.00			35.00			45.00			45.00		
Grade [%]	0.00			0.00			0.00			0.00		
Crosswalk	Yes			Yes			No			No		

Volumes

Name	I-605 NB Ramps			I-605 NB Ramps			Live Oak Avenue			Live Oak Avenue		
Base Volume Input [veh/h]	0	0	621	0	0	523	0	1012	0	0	944	0
Base Volume Adjustment Factor	1.0000	1.0000	1.0000	1.0000	1.0000	1.0000	1.0000	1.0000	1.0000	1.0000	1.0000	1.0000
Heavy Vehicles Percentage [%]	2.00	2.00	2.00	2.00	2.00	2.00	2.00	2.00	2.00	2.00	2.00	2.00
Growth Rate	1.00	1.00	1.01	1.00	1.00	1.01	1.00	1.01	1.00	1.00	1.01	1.00
In-Process Volume [veh/h]	0	0	0	0	0	0	0	0	0	0	0	0
Site-Generated Trips [veh/h]	0	0	14	0	0	0	0	0	0	0	93	0
Diverted Trips [veh/h]	0	0	0	0	0	0	0	0	0	0	0	0
Pass-by Trips [veh/h]	0	0	0	0	0	0	0	0	0	0	0	0
Existing Site Adjustment Volume [veh/h]	0	0	0	0	0	0	0	0	0	0	0	0
Other Volume [veh/h]	0	0	0	0	0	0	0	0	0	0	0	0
Total Hourly Volume [veh/h]	0	0	641	0	0	528	0	1022	0	0	1046	0
Peak Hour Factor	1.0000	1.0000	1.0000	1.0000	1.0000	1.0000	1.0000	1.0000	1.0000	1.0000	1.0000	1.0000
Other Adjustment Factor	1.0000	1.0000	1.0000	1.0000	1.0000	1.0000	1.0000	1.0000	1.0000	1.0000	1.0000	1.0000
Total 15-Minute Volume [veh/h]	0	0	160	0	0	132	0	256	0	0	262	0
Total Analysis Volume [veh/h]	0	0	641	0	0	528	0	1022	0	0	1046	0
Pedestrian Volume [ped/h]	0			0			0			0		

Intersection Settings

Priority Scheme	Stop	Stop	Free	Free
Flared Lane				
Storage Area [veh]	0	0	0	0
Two-Stage Gap Acceptance	No	No		
Number of Storage Spaces in Median	0	0	0	0

Movement, Approach, & Intersection Results

V/C, Movement V/C Ratio	0.00	0.00	1.26	0.00	0.00	1.06	0.00	0.01	0.00	0.00	0.01	0.00
d_M, Delay for Movement [s/veh]	0.00	0.00	157.81	0.00	0.00	85.56	0.00	0.00	0.00	0.00	0.00	0.00
Movement LOS			F			F		A			A	
95th-Percentile Queue Length [veh/ln]	0.00	0.00	25.93	0.00	0.00	16.02	0.00	0.00	0.00	0.00	0.00	0.00
95th-Percentile Queue Length [ft/ln]	0.00	0.00	648.15	0.00	0.00	400.55	0.00	0.00	0.00	0.00	0.00	0.00
d_A, Approach Delay [s/veh]	157.81			85.56			0.00			0.00		
Approach LOS	F			F			A			A		
d_I, Intersection Delay [s/veh]	45.21											
Intersection LOS	F											

Intersection Level Of Service Report
Intersection 3: Graham Road (NS) at Live Oak Avenue (EW)

Control Type:	Signalized	Delay (sec / veh):	-
Analysis Method:	ICU 1	Level Of Service:	A
Analysis Period:	15 minutes	Volume to Capacity (v/c):	0.598

Intersection Setup

Name	Graham Road		Live Oak Avenue		Live Oak Avenue	
Approach	Northbound		Eastbound		Westbound	
Lane Configuration						
Turning Movement	Left	Right	Thru	Right	Left	Thru
Lane Width [ft]	12.00	12.00	12.00	12.00	12.00	12.00
No. of Lanes in Pocket	0	0	0	0	1	0
Pocket Length [ft]	100.00	100.00	100.00	100.00	205.00	100.00
Speed [mph]	35.00		45.00		45.00	
Grade [%]	0.00		0.00		0.00	
Crosswalk	Yes		No		Yes	

Volumes

Name	Graham Road		Live Oak Avenue		Live Oak Avenue	
Base Volume Input [veh/h]	38	39	578	28	14	1334
Base Volume Adjustment Factor	1.0000	1.0000	1.0000	1.0000	1.0000	1.0000
Heavy Vehicles Percentage [%]	2.00	2.00	2.00	2.00	2.00	2.00
Growth Rate	1.01	1.01	1.01	1.01	1.01	1.01
In-Process Volume [veh/h]	0	0	0	0	0	0
Site-Generated Trips [veh/h]	0	0	14	0	0	93
Diverted Trips [veh/h]	0	0	0	0	0	0
Pass-by Trips [veh/h]	0	0	0	0	0	0
Existing Site Adjustment Volume [veh/h]	0	0	0	0	0	0
Other Volume [veh/h]	0	0	0	0	0	0
Total Hourly Volume [veh/h]	38	39	598	28	14	1440
Peak Hour Factor	1.0000	1.0000	1.0000	1.0000	1.0000	1.0000
Other Adjustment Factor	1.0000	1.0000	1.0000	1.0000	1.0000	1.0000
Total 15-Minute Volume [veh/h]	10	10	150	7	4	360
Total Analysis Volume [veh/h]	38	39	598	28	14	1440
Pedestrian Volume [ped/h]	0		0		0	
Bicycle Volume [bicycles/h]	0		0		0	

Intersection Settings

Cycle Length [s]	100
Lost time [s]	10.00

Phasing & Timing

Control Type	Permissive	Permissive	Permissive	Permissive	Protected	Permissive
Signal group	5	0	8	0	7	4
Auxiliary Signal Groups						
Lead / Lag	Lead	-	-	-	Lead	-

Movement, Approach, & Intersection Results

V/C, Movement V/C Ratio	0.02	0.05	0.19	0.02	0.01	0.45
Intersection LOS	A					
Intersection V/C	0.598					

Intersection Level Of Service Report
Intersection 4: Rivergrade Road (NS) at Live Oak Avenue (EW)

Control Type:	Signalized	Delay (sec / veh):	-
Analysis Method:	ICU 1	Level Of Service:	D
Analysis Period:	15 minutes	Volume to Capacity (v/c):	0.889

Intersection Setup

Name	Rivergrade Raod			Rivergrade Road			Live Oak Avenue			Live Oak Avenue		
Approach	Northbound			Southbound			Eastbound			Westbound		
Lane Configuration												
Turning Movement	Left	Thru	Right	Left	Thru	Right	Left	Thru	Right	Left	Thru	Right
Lane Width [ft]	12.00	12.00	12.00	12.00	12.00	12.00	12.00	12.00	12.00	12.00	12.00	12.00
No. of Lanes in Pocket	1	0	0	1	0	1	1	0	0	1	0	1
Pocket Length [ft]	315.00	100.00	100.00	160.00	100.00	145.00	205.00	100.00	100.00	155.00	100.00	120.00
Speed [mph]	50.00			40.00			45.00			45.00		
Grade [%]	0.00			0.00			0.00			0.00		
Crosswalk	Yes			Yes			Yes			Yes		

Volumes

Name	Rivergrade Raod			Rivergrade Road			Live Oak Avenue			Live Oak Avenue		
Base Volume Input [veh/h]	162	193	481	25	41	54	37	1475	21	117	685	12
Base Volume Adjustment Factor	1.0000	1.0000	1.0000	1.0000	1.0000	1.0000	1.0000	1.0000	1.0000	1.0000	1.0000	1.0000
Heavy Vehicles Percentage [%]	2.00	2.00	2.00	2.00	2.00	2.00	2.00	2.00	2.00	2.00	2.00	2.00
Growth Rate	1.01	1.01	1.01	1.01	1.01	1.01	1.01	1.01	1.01	1.01	1.01	1.01
In-Process Volume [veh/h]	0	0	0	0	0	0	0	0	0	0	0	0
Site-Generated Trips [veh/h]	0	0	0	0	0	0	0	14	0	0	93	0
Diverted Trips [veh/h]	0	0	0	0	0	0	0	0	0	0	0	0
Pass-by Trips [veh/h]	0	0	0	0	0	0	0	0	0	0	0	0
Existing Site Adjustment Volume [veh/h]	0	0	0	0	0	0	0	0	0	0	0	0
Other Volume [veh/h]	0	0	0	0	0	0	0	0	0	0	0	0
Total Hourly Volume [veh/h]	164	195	486	25	41	55	37	1504	21	118	785	12
Peak Hour Factor	1.0000	1.0000	1.0000	1.0000	1.0000	1.0000	1.0000	1.0000	1.0000	1.0000	1.0000	1.0000
Other Adjustment Factor	1.0000	1.0000	1.0000	1.0000	1.0000	1.0000	1.0000	1.0000	1.0000	1.0000	1.0000	1.0000
Total 15-Minute Volume [veh/h]	41	49	122	6	10	14	9	376	5	30	196	3
Total Analysis Volume [veh/h]	164	195	486	25	41	55	37	1504	21	118	785	12
Pedestrian Volume [ped/h]	0			0			0			0		
Bicycle Volume [bicycles/h]	0			0			0			0		

Intersection Settings

Cycle Length [s]	100
Lost time [s]	10.00

Phasing & Timing

Control Type	Protecte	Permiss	Overlap	Protecte	Permiss	Permiss	Protecte	Permiss	Permiss	Protecte	Permiss	Permiss
Signal group	5	2	2	1	6	0	3	8	0	7	4	0
Auxiliary Signal Groups			2,7									
Lead / Lag	Lead	-	-	Lead	-	-	Lead	-	-	Lead	-	-

Movement, Approach, & Intersection Results

V/C, Movement V/C Ratio	0.10	0.12	0.23	0.02	0.01	0.03	0.02	0.47	0.01	0.07	0.25	0.01
Intersection LOS	D											
Intersection V/C	0.889											

Intersection Level Of Service Report
Intersection 5: Stewart Avenue (NS) at Live Oak Avenue (EW)

Control Type:	Signalized	Delay (sec / veh):	-
Analysis Method:	ICU 1	Level Of Service:	C
Analysis Period:	15 minutes	Volume to Capacity (v/c):	0.769

Intersection Setup

Name	Stewart Avenue			Stewart Avenue			Live Oak Avenue			Live Oak Avenue		
Approach	Northbound			Southbound			Eastbound			Westbound		
Lane Configuration												
Turning Movement	Left	Thru	Right	Left	Thru	Right	Left	Thru	Right	Left	Thru	Right
Lane Width [ft]	12.00	12.00	12.00	12.00	12.00	12.00	12.00	12.00	12.00	12.00	12.00	12.00
No. of Lanes in Pocket	0	0	0	1	0	0	1	0	0	1	0	0
Pocket Length [ft]	100.00	100.00	100.00	100.00	100.00	100.00	165.00	100.00	100.00	100.00	100.00	100.00
Speed [mph]	30.00			30.00			45.00			45.00		
Grade [%]	0.00			0.00			0.00			0.00		
Crosswalk	Yes			Yes			No			Yes		

Volumes

Name	Stewart Avenue			Stewart Avenue			Live Oak Avenue			Live Oak Avenue		
Base Volume Input [veh/h]	53	27	7	32	109	7	38	1720	302	31	692	9
Base Volume Adjustment Factor	1.0000	1.0000	1.0000	1.0000	1.0000	1.0000	1.0000	1.0000	1.0000	1.0000	1.0000	1.0000
Heavy Vehicles Percentage [%]	2.00	2.00	2.00	2.00	2.00	2.00	2.00	2.00	2.00	2.00	2.00	2.00
Growth Rate	1.01	1.01	1.01	1.01	1.01	1.01	1.01	1.01	1.01	1.01	1.01	1.01
In-Process Volume [veh/h]	0	0	0	0	0	0	0	0	0	0	0	0
Site-Generated Trips [veh/h]	0	0	0	0	0	0	0	14	0	0	93	0
Diverted Trips [veh/h]	0	0	0	0	0	0	0	0	0	0	0	0
Pass-by Trips [veh/h]	0	0	0	0	0	0	0	0	0	0	0	0
Existing Site Adjustment Volume [veh/h]	0	0	0	0	0	0	0	0	0	0	0	0
Other Volume [veh/h]	0	0	0	0	0	0	0	0	0	0	0	0
Total Hourly Volume [veh/h]	54	27	7	32	110	7	38	1751	305	31	792	9
Peak Hour Factor	1.0000	1.0000	1.0000	1.0000	1.0000	1.0000	1.0000	1.0000	1.0000	1.0000	1.0000	1.0000
Other Adjustment Factor	1.0000	1.0000	1.0000	1.0000	1.0000	1.0000	1.0000	1.0000	1.0000	1.0000	1.0000	1.0000
Total 15-Minute Volume [veh/h]	14	7	2	8	28	2	10	438	76	8	198	2
Total Analysis Volume [veh/h]	54	27	7	32	110	7	38	1751	305	31	792	9
Pedestrian Volume [ped/h]	0			0			0			0		
Bicycle Volume [bicycles/h]	0			0			0			0		

Intersection Settings

Cycle Length [s]	100
Lost time [s]	10.00

Phasing & Timing

Control Type	Permiss	Permiss	Permiss	Permiss	Permiss	Permiss	Permiss	Permiss	Permiss	Permiss	Permiss	Permiss
Signal group	0	2	0	0	6	0	0	8	0	0	4	0
Auxiliary Signal Groups												
Lead / Lag	-	-	-	-	-	-	-	-	-	-	-	-

Movement, Approach, & Intersection Results

V/C, Movement V/C Ratio	0.03	0.06	0.06	0.02	0.07	0.00	0.02	0.55	0.19	0.02	0.25	0.01
Intersection LOS	C											
Intersection V/C	0.769											

Intersection Level Of Service Report

Intersection 6: Baldwin Park Boulevard (NS) at Live Oak Avenue (EW)

Control Type:	Signalized	Delay (sec / veh):	-
Analysis Method:	ICU 1	Level Of Service:	C
Analysis Period:	15 minutes	Volume to Capacity (v/c):	0.710

Intersection Setup

Name	Baldwin Park Boulevard						Live Oak Avenue			Live Oak Avenue		
Approach	Northbound			Southbound			Eastbound			Westbound		
Lane Configuration												
Turning Movement	Left	Thru	Right	Left	Thru	Right	Left	Thru	Right	Left	Thru	Right
Lane Width [ft]	12.00	12.00	12.00	12.00	12.00	12.00	12.00	12.00	12.00	12.00	12.00	12.00
No. of Lanes in Pocket	1	0	0	0	0	0	0	0	0	1	0	0
Pocket Length [ft]	100.00	100.00	100.00	100.00	100.00	100.00	100.00	100.00	100.00	200.00	100.00	100.00
Speed [mph]	40.00			35.00			45.00			45.00		
Grade [%]	0.00			0.00			0.00			0.00		
Crosswalk	Yes			Yes			No			No		

Volumes

Name	Baldwin Park Boulevard						Live Oak Avenue			Live Oak Avenue		
Base Volume Input [veh/h]	77	0	94	0	0	0	0	1259	623	280	623	0
Base Volume Adjustment Factor	1.0000	1.0000	1.0000	1.0000	1.0000	1.0000	1.0000	1.0000	1.0000	1.0000	1.0000	1.0000
Heavy Vehicles Percentage [%]	2.00	2.00	2.00	2.00	2.00	2.00	2.00	2.00	2.00	2.00	2.00	2.00
Growth Rate	1.01	1.01	1.01	1.01	1.01	1.01	1.01	1.01	1.01	1.01	1.01	1.01
In-Process Volume [veh/h]	0	0	0	0	0	0	0	0	0	0	0	0
Site-Generated Trips [veh/h]	0	0	1	0	0	0	0	14	0	7	93	0
Diverted Trips [veh/h]	0	0	0	0	0	0	0	0	0	0	0	0
Pass-by Trips [veh/h]	0	0	0	0	0	0	0	0	0	0	0	0
Existing Site Adjustment Volume [veh/h]	0	0	0	0	0	0	0	0	0	0	0	0
Other Volume [veh/h]	0	0	0	0	0	0	0	0	0	0	0	0
Total Hourly Volume [veh/h]	78	0	96	0	0	0	0	1286	629	290	722	0
Peak Hour Factor	1.0000	1.0000	1.0000	1.0000	1.0000	1.0000	1.0000	1.0000	1.0000	1.0000	1.0000	1.0000
Other Adjustment Factor	1.0000	1.0000	1.0000	1.0000	1.0000	1.0000	1.0000	1.0000	1.0000	1.0000	1.0000	1.0000
Total 15-Minute Volume [veh/h]	20	0	24	0	0	0	0	322	157	73	181	0
Total Analysis Volume [veh/h]	78	0	96	0	0	0	0	1286	629	290	722	0
Pedestrian Volume [ped/h]	0			0			0			0		
Bicycle Volume [bicycles/h]	0			0			0			0		

Intersection Settings

Cycle Length [s]	100
Lost time [s]	10.00

Phasing & Timing

Control Type	Permiss	Permiss	Permiss	Permiss	Permiss	Permiss	Permiss	Permiss	Permiss	Protecte	Permiss	Permiss
Signal group	5	0	0	0	0	0	0	8	0	7	4	0
Auxiliary Signal Groups												
Lead / Lag	Lead	-	-	-	-	-	-	-	-	Lead	-	-

Movement, Approach, & Intersection Results

V/C, Movement V/C Ratio	0.02	0.00	0.00	0.00	0.00	0.00	0.00	0.40	0.39	0.18	0.23	0.00
Intersection LOS	C											
Intersection V/C	0.710											

Intersection Level Of Service Report
Intersection 7: Arrow Highway (NS) at Live Oak Ave/Arrow Hwy (EW)

Control Type:	Signalized	Delay (sec / veh):	-
Analysis Method:	ICU 1	Level Of Service:	E
Analysis Period:	15 minutes	Volume to Capacity (v/c):	0.902

Intersection Setup

Name			Live Oak Avenue		Arrow Highway	
Approach	Southbound		Eastbound		Westbound	
Lane Configuration						
Turning Movement	Left	Right	Left	Thru	Thru	Right
Lane Width [ft]	12.00	12.00	12.00	12.00	12.00	12.00
No. of Lanes in Pocket	0	0	1	0	0	0
Pocket Length [ft]	100.00	100.00	160.00	100.00	100.00	100.00
Speed [mph]	35.00		45.00		45.00	
Grade [%]	0.00		0.00		0.00	
Crosswalk	No		Yes		No	

Volumes

Name			Live Oak Avenue		Arrow Highway	
Base Volume Input [veh/h]	1077	131	41	1326	1117	451
Base Volume Adjustment Factor	1.0000	1.0000	1.0000	1.0000	1.0000	1.0000
Heavy Vehicles Percentage [%]	2.00	2.00	2.00	2.00	2.00	2.00
Growth Rate	1.01	1.01	1.01	1.01	1.01	1.00
In-Process Volume [veh/h]	0	0	0	0	0	0
Site-Generated Trips [veh/h]	2	0	0	15	100	12
Diverted Trips [veh/h]	0	0	0	0	0	0
Pass-by Trips [veh/h]	0	0	0	0	0	0
Existing Site Adjustment Volume [veh/h]	0	0	0	0	0	0
Other Volume [veh/h]	0	0	0	0	0	0
Total Hourly Volume [veh/h]	1090	132	41	1354	1228	463
Peak Hour Factor	1.0000	1.0000	1.0000	1.0000	1.0000	1.0000
Other Adjustment Factor	1.0000	1.0000	1.0000	1.0000	1.0000	1.0000
Total 15-Minute Volume [veh/h]	273	33	10	339	307	116
Total Analysis Volume [veh/h]	1090	132	41	1354	1228	463
Pedestrian Volume [ped/h]	0		0		0	
Bicycle Volume [bicycles/h]	0		0		0	

Intersection Settings

Cycle Length [s]	100
Lost time [s]	10.00

Phasing & Timing

Control Type	Permissive	Permissive	Permissive	Permissive	Permissive	Unsignalized
Signal group	1	0	0	8	4	0
Auxiliary Signal Groups						
Lead / Lag	Lead	-	-	-	-	-

Movement, Approach, & Intersection Results

V/C, Movement V/C Ratio	0.34	0.08	0.03	0.42	0.38	0.00
Intersection LOS	E					
Intersection V/C	0.902					

Intersection Level Of Service Report
Intersection 8: Maine Avenue (NS) at Arrow Highway (EW)

Control Type:	Signalized	Delay (sec / veh):	-
Analysis Method:	ICU 1	Level Of Service:	D
Analysis Period:	15 minutes	Volume to Capacity (v/c):	0.820

Intersection Setup

Name	Maine Avenue		Arrow Highway		Arrow Highway	
Approach	Northbound		Eastbound		Westbound	
Lane Configuration						
Turning Movement	Left	Right	Thru	Right	Left	Thru
Lane Width [ft]	12.00	12.00	12.00	12.00	12.00	12.00
No. of Lanes in Pocket	0	1	0	0	1	0
Pocket Length [ft]	100.00	50.00	100.00	100.00	80.00	100.00
Speed [mph]	35.00		45.00		45.00	
Grade [%]	0.00		0.00		0.00	
Crosswalk	Yes		No		Yes	

Volumes

Name	Maine Avenue		Arrow Highway		Arrow Highway	
Base Volume Input [veh/h]	247	57	1849	555	70	1046
Base Volume Adjustment Factor	1.0000	1.0000	1.0000	1.0000	1.0000	1.0000
Heavy Vehicles Percentage [%]	2.00	2.00	2.00	2.00	2.00	2.00
Growth Rate	1.01	1.01	1.01	1.01	1.01	1.01
In-Process Volume [veh/h]	0	0	0	0	0	0
Site-Generated Trips [veh/h]	0	0	17	0	0	112
Diverted Trips [veh/h]	0	0	0	0	0	0
Pass-by Trips [veh/h]	0	0	0	0	0	0
Existing Site Adjustment Volume [veh/h]	0	0	0	0	0	0
Other Volume [veh/h]	0	0	0	0	0	0
Total Hourly Volume [veh/h]	249	58	1884	561	71	1168
Peak Hour Factor	1.0000	1.0000	1.0000	1.0000	1.0000	1.0000
Other Adjustment Factor	1.0000	1.0000	1.0000	1.0000	1.0000	1.0000
Total 15-Minute Volume [veh/h]	62	15	471	140	18	292
Total Analysis Volume [veh/h]	249	58	1884	561	71	1168
Pedestrian Volume [ped/h]	0		0		0	
Bicycle Volume [bicycles/h]	0		0		0	

Intersection Settings

Cycle Length [s]	100
Lost time [s]	10.00

Phasing & Timing

Control Type	Split	Split	Permissive	Permissive	Permissive	Permissive
Signal group	5	0	8	0	0	4
Auxiliary Signal Groups						
Lead / Lag	Lead	-	-	-	-	-

Movement, Approach, & Intersection Results

V/C, Movement V/C Ratio	0.08	0.04	0.59	0.35	0.04	0.24
Intersection LOS	D					
Intersection V/C	0.820					

Intersection Level Of Service Report

Intersection 9: Santa Fe Dam/Azusa Canyon Road (NS) at Arrow Highway (EW)

Control Type:	Signalized	Delay (sec / veh):	-
Analysis Method:	ICU 1	Level Of Service:	E
Analysis Period:	15 minutes	Volume to Capacity (v/c):	0.915

Intersection Setup

Name	Azusa Canyon Road						Arrow Highway			Arrow Highway		
Approach	Northbound			Southbound			Eastbound			Westbound		
Lane Configuration												
Turning Movement	Left	Thru	Right	Left	Thru	Right	Left	Thru	Right	Left	Thru	Right
Lane Width [ft]	12.00	12.00	12.00	12.00	12.00	12.00	12.00	12.00	12.00	12.00	12.00	12.00
No. of Lanes in Pocket	1	0	0	0	0	0	1	0	0	1	0	0
Pocket Length [ft]	200.00	100.00	100.00	100.00	100.00	100.00	185.00	100.00	100.00	180.00	100.00	100.00
Speed [mph]	35.00			35.00			45.00			45.00		
Grade [%]	0.00			0.00			0.00			0.00		
Crosswalk	Yes			Yes			No			Yes		

Volumes

Name	Azusa Canyon Road						Arrow Highway			Arrow Highway		
Base Volume Input [veh/h]	120	5	442	15	13	29	14	1265	59	158	967	16
Base Volume Adjustment Factor	1.0000	1.0000	1.0000	1.0000	1.0000	1.0000	1.0000	1.0000	1.0000	1.0000	1.0000	1.0000
Heavy Vehicles Percentage [%]	2.00	2.00	2.00	2.00	2.00	2.00	2.00	2.00	2.00	2.00	2.00	2.00
Growth Rate	1.01	1.00	1.01	1.00	1.00	1.00	1.00	1.01	1.01	1.01	1.01	1.00
In-Process Volume [veh/h]	0	0	0	0	0	0	0	0	0	0	0	0
Site-Generated Trips [veh/h]	0	0	1	0	0	0	0	17	0	7	112	0
Diverted Trips [veh/h]	0	0	0	0	0	0	0	0	0	0	0	0
Pass-by Trips [veh/h]	0	0	0	0	0	0	0	0	0	0	0	0
Existing Site Adjustment Volume [veh/h]	0	0	0	0	0	0	0	0	0	0	0	0
Other Volume [veh/h]	0	0	0	0	0	0	0	0	0	0	0	0
Total Hourly Volume [veh/h]	121	5	447	15	13	29	14	1295	60	167	1089	16
Peak Hour Factor	1.0000	1.0000	1.0000	1.0000	1.0000	1.0000	1.0000	1.0000	1.0000	1.0000	1.0000	1.0000
Other Adjustment Factor	1.0000	1.0000	1.0000	1.0000	1.0000	1.0000	1.0000	1.0000	1.0000	1.0000	1.0000	1.0000
Total 15-Minute Volume [veh/h]	30	1	112	4	3	7	4	324	15	42	272	4
Total Analysis Volume [veh/h]	121	5	447	15	13	29	14	1295	60	167	1089	16
Pedestrian Volume [ped/h]	0			0			0			0		
Bicycle Volume [bicycles/h]	0			0			0			0		

Intersection Settings

Cycle Length [s]	100
Lost time [s]	10.00

Phasing & Timing

Control Type	Split	Split	Split	Split	Split	Split	Protecte	Permiss	Permiss	Protecte	Permiss	Permiss
Signal group	0	2	0	0	6	0	3	8	0	7	4	0
Auxiliary Signal Groups												
Lead / Lag	-	-	-	-	-	-	Lead	-	-	Lead	-	-

Movement, Approach, & Intersection Results

V/C, Movement V/C Ratio	0.08	0.00	0.28	0.01	0.03	0.03	0.01	0.40	0.04	0.10	0.34	0.01
Intersection LOS	E											
Intersection V/C	0.915											

Intersection Level Of Service Report
Intersection 10: 4th Street (NS) at Arrow Highway (EW)

Control Type:	Signalized	Delay (sec / veh):	-
Analysis Method:	ICU 1	Level Of Service:	A
Analysis Period:	15 minutes	Volume to Capacity (v/c):	0.559

Intersection Setup

Name	4th Street			4th Street			Arrow Highway			Arrow Highway		
Approach	Northbound			Southbound			Eastbound			Westbound		
Lane Configuration												
Turning Movement	Left	Thru	Right	Left	Thru	Right	Left	Thru	Right	Left	Thru	Right
Lane Width [ft]	12.00	12.00	12.00	12.00	12.00	12.00	12.00	12.00	12.00	12.00	12.00	12.00
No. of Lanes in Pocket	1	0	0	0	0	0	1	0	1	1	0	0
Pocket Length [ft]	55.00	100.00	100.00	100.00	100.00	100.00	145.00	100.00	150.00	195.00	100.00	100.00
Speed [mph]	35.00			25.00			45.00			45.00		
Grade [%]	0.00			0.00			0.00			0.00		
Crosswalk	Yes			Yes			Yes			Yes		

Volumes

Name	4th Street			4th Street			Arrow Highway			Arrow Highway		
Base Volume Input [veh/h]	143	1	44	11	0	12	5	1758	39	41	923	2
Base Volume Adjustment Factor	1.0000	1.0000	1.0000	1.0000	1.0000	1.0000	1.0000	1.0000	1.0000	1.0000	1.0000	1.0000
Heavy Vehicles Percentage [%]	2.00	2.00	2.00	2.00	2.00	2.00	2.00	2.00	2.00	2.00	2.00	2.00
Growth Rate	1.01	1.01	1.01	1.01	1.01	1.01	1.01	1.01	1.01	1.01	1.01	1.01
In-Process Volume [veh/h]	0	0	0	0	0	0	0	0	0	0	0	0
Site-Generated Trips [veh/h]	0	0	0	0	0	0	0	18	0	0	119	0
Diverted Trips [veh/h]	0	0	0	0	0	0	0	0	0	0	0	0
Pass-by Trips [veh/h]	0	0	0	0	0	0	0	0	0	0	0	0
Existing Site Adjustment Volume [veh/h]	0	0	0	0	0	0	0	0	0	0	0	0
Other Volume [veh/h]	0	0	0	0	0	0	0	0	0	0	0	0
Total Hourly Volume [veh/h]	144	1	44	11	0	12	5	1794	39	41	1051	2
Peak Hour Factor	1.0000	1.0000	1.0000	1.0000	1.0000	1.0000	1.0000	1.0000	1.0000	1.0000	1.0000	1.0000
Other Adjustment Factor	1.0000	1.0000	1.0000	1.0000	1.0000	1.0000	1.0000	1.0000	1.0000	1.0000	1.0000	1.0000
Total 15-Minute Volume [veh/h]	36	0	11	3	0	3	1	449	10	10	263	1
Total Analysis Volume [veh/h]	144	1	44	11	0	12	5	1794	39	41	1051	2
Pedestrian Volume [ped/h]	0			0			0			0		
Bicycle Volume [bicycles/h]	0			0			0			0		

Intersection Settings

Cycle Length [s]	100
Lost time [s]	10.00

Phasing & Timing

Control Type	Split	Split	Split	Split	Split	Split	Protecte	Permiss	Permiss	Protecte	Permiss	Permiss
Signal group	0	2	0	0	6	0	3	8	0	7	4	0
Auxiliary Signal Groups												
Lead / Lag	-	-	-	-	-	-	Lead	-	-	Lead	-	-

Movement, Approach, & Intersection Results

V/C, Movement V/C Ratio	0.05	0.05	0.03	0.01	0.00	0.01	0.00	0.37	0.02	0.03	0.33	0.00
Intersection LOS	A											
Intersection V/C	0.559											

Intersection Level Of Service Report
Intersection 11: Irwindale Avenue (NS) at I-210 WB Ramps (EW)

Control Type:	Signalized	Delay (sec / veh):	-
Analysis Method:	ICU 1	Level Of Service:	A
Analysis Period:	15 minutes	Volume to Capacity (v/c):	0.540

Intersection Setup

Name	Irwindale Avenue				I-210 WB Ramps	
Approach	Northbound		Southbound		Westbound	
Lane Configuration						
Turning Movement	Thru	Right	Left	Thru	Left	Right
Lane Width [ft]	12.00	12.00	12.00	12.00	12.00	12.00
No. of Lanes in Pocket	0	0	0	0	0	0
Pocket Length [ft]	100.00	100.00	100.00	100.00	100.00	100.00
Speed [mph]	35.00		35.00		35.00	
Grade [%]	0.00		0.00		0.00	
Crosswalk	No		No		Yes	

Volumes

Name	Irwindale Avenue				I-210 WB Ramps	
Base Volume Input [veh/h]	793	0	0	1473	192	206
Base Volume Adjustment Factor	1.0000	1.0000	1.0000	1.0000	1.0000	1.0000
Heavy Vehicles Percentage [%]	2.00	2.00	2.00	2.00	2.00	2.00
Growth Rate	1.01	1.00	1.00	1.01	1.01	1.01
In-Process Volume [veh/h]	0	0	0	0	0	0
Site-Generated Trips [veh/h]	0	0	0	0	0	0
Diverted Trips [veh/h]	0	0	0	0	0	0
Pass-by Trips [veh/h]	0	0	0	0	0	0
Existing Site Adjustment Volume [veh/h]	0	0	0	0	0	0
Other Volume [veh/h]	0	0	0	0	0	0
Total Hourly Volume [veh/h]	801	0	0	1488	194	208
Peak Hour Factor	1.0000	1.0000	1.0000	1.0000	1.0000	1.0000
Other Adjustment Factor	1.0000	1.0000	1.0000	1.0000	1.0000	1.0000
Total 15-Minute Volume [veh/h]	200	0	0	372	49	52
Total Analysis Volume [veh/h]	801	0	0	1488	194	208
Pedestrian Volume [ped/h]	0		0		0	
Bicycle Volume [bicycles/h]	0		0		0	

Intersection Settings

Cycle Length [s]	100
Lost time [s]	10.00

Phasing & Timing

Control Type	Permissive	Permissive	Permissive	Permissive	Split	Split
Signal group	2	0	0	6	7	0
Auxiliary Signal Groups						
Lead / Lag	-	-	-	-	Lead	-

Movement, Approach, & Intersection Results

V/C, Movement V/C Ratio	0.17	0.00	0.00	0.31	0.06	0.13
Intersection LOS	A					
Intersection V/C	0.540					

Intersection Level Of Service Report

Intersection 12: Irwindale Avenue (NS) at I-210 EB Ramps (EW)

Control Type:	Signalized	Delay (sec / veh):	-
Analysis Method:	ICU 1	Level Of Service:	C
Analysis Period:	15 minutes	Volume to Capacity (v/c):	0.766

Intersection Setup

Name	Irwindale Avenue			Irwindale Avenue			I-210 EB Ramps			I-210 EB Ramps		
Approach	Northbound			Southbound			Eastbound			Westbound		
Lane Configuration												
Turning Movement	Left	Thru	Right	Left	Thru	Right	Left	Thru	Right	Left	Thru	Right
Lane Width [ft]	12.00	12.00	12.00	12.00	12.00	12.00	12.00	12.00	12.00	12.00	12.00	12.00
No. of Lanes in Pocket	0	0	1	1	0	0	0	0	0	0	0	0
Pocket Length [ft]	100.00	100.00	505.00	330.00	100.00	100.00	100.00	100.00	100.00	100.00	100.00	100.00
Speed [mph]	35.00			35.00			35.00			35.00		
Grade [%]	0.00			0.00			0.00			0.00		
Crosswalk	No			No			No			Yes		

Volumes

Name	Irwindale Avenue			Irwindale Avenue			I-210 EB Ramps			I-210 EB Ramps		
Base Volume Input [veh/h]	0	1034	336	416	792	0	375	0	456	0	0	0
Base Volume Adjustment Factor	1.0000	1.0000	1.0000	1.0000	1.0000	1.0000	1.0000	1.0000	1.0000	1.0000	1.0000	1.0000
Heavy Vehicles Percentage [%]	2.00	2.00	2.00	2.00	2.00	2.00	2.00	2.00	2.00	2.00	2.00	2.00
Growth Rate	1.00	1.01	1.01	1.01	1.01	1.00	1.01	1.00	1.01	1.00	1.00	1.00
In-Process Volume [veh/h]	0	0	0	0	0	0	0	0	0	0	0	0
Site-Generated Trips [veh/h]	0	56	0	0	0	0	0	0	8	0	0	0
Diverted Trips [veh/h]	0	0	0	0	0	0	0	0	0	0	0	0
Pass-by Trips [veh/h]	0	0	0	0	0	0	0	0	0	0	0	0
Existing Site Adjustment Volume [veh/h]	0	0	0	0	0	0	0	0	0	0	0	0
Other Volume [veh/h]	0	0	0	0	0	0	0	0	0	0	0	0
Total Hourly Volume [veh/h]	0	1100	339	420	800	0	379	0	469	0	0	0
Peak Hour Factor	1.0000	1.0000	1.0000	1.0000	1.0000	1.0000	1.0000	1.0000	1.0000	1.0000	1.0000	1.0000
Other Adjustment Factor	1.0000	1.0000	1.0000	1.0000	1.0000	1.0000	1.0000	1.0000	1.0000	1.0000	1.0000	1.0000
Total 15-Minute Volume [veh/h]	0	275	85	105	200	0	95	0	117	0	0	0
Total Analysis Volume [veh/h]	0	1100	339	420	800	0	379	0	469	0	0	0
Pedestrian Volume [ped/h]	0			0			0			0		
Bicycle Volume [bicycles/h]	0			0			0			0		

Intersection Settings

Cycle Length [s]	100
Lost time [s]	10.00

Phasing & Timing

Control Type	Permiss	Permiss	Permiss	Protecte	Permiss	Permiss	Split	Permiss	Split	Permiss	Permiss	Permiss
Signal group	0	2	0	1	6	0	3	0	0	0	0	0
Auxiliary Signal Groups												
Lead / Lag	-	-	-	Lead	-	-	Lead	-	-	-	-	-

Movement, Approach, & Intersection Results

V/C, Movement V/C Ratio	0.00	0.34	0.21	0.13	0.25	0.00	0.12	0.00	0.18	0.00	0.00	0.00
Intersection LOS	C											
Intersection V/C	0.766											

Intersection Level Of Service Report

Intersection 13: Irwindale Avenue (NS) at Jardin De Roca/Irwindale Rd (EW)

Control Type:	Signalized	Delay (sec / veh):	-
Analysis Method:	ICU 1	Level Of Service:	C
Analysis Period:	15 minutes	Volume to Capacity (v/c):	0.706

Intersection Setup

Name	Irwindale Avenue			Irwindale Avenue			Jardin De Roca			Irwindale Road		
Approach	Northbound			Southbound			Eastbound			Westbound		
Lane Configuration												
Turning Movement	Left	Thru	Right	Left	Thru	Right	Left	Thru	Right	Left	Thru	Right
Lane Width [ft]	12.00	12.00	12.00	12.00	12.00	12.00	12.00	12.00	12.00	12.00	12.00	12.00
No. of Lanes in Pocket	1	0	1	1	0	0	0	0	0	0	0	0
Pocket Length [ft]	130.00	100.00	180.00	245.00	100.00	100.00	100.00	100.00	100.00	100.00	100.00	100.00
Speed [mph]	35.00			35.00			25.00			25.00		
Grade [%]	0.00			0.00			0.00			0.00		
Crosswalk	No			No			No			Yes		

Volumes

Name	Irwindale Avenue			Irwindale Avenue			Jardin De Roca			Irwindale Road		
Base Volume Input [veh/h]	28	1163	42	35	1205	7	25	0	80	113	0	178
Base Volume Adjustment Factor	1.0000	1.0000	1.0000	1.0000	1.0000	1.0000	1.0000	1.0000	1.0000	1.0000	1.0000	1.0000
Heavy Vehicles Percentage [%]	2.00	2.00	2.00	2.00	2.00	2.00	2.00	2.00	2.00	2.00	2.00	2.00
Growth Rate	1.01	1.01	1.01	1.01	1.01	1.01	1.01	1.00	1.01	1.01	1.00	1.01
In-Process Volume [veh/h]	0	0	0	0	0	0	0	0	0	0	0	0
Site-Generated Trips [veh/h]	0	56	0	0	8	0	0	0	0	0	0	0
Diverted Trips [veh/h]	0	0	0	0	0	0	0	0	0	0	0	0
Pass-by Trips [veh/h]	0	0	0	0	0	0	0	0	0	0	0	0
Existing Site Adjustment Volume [veh/h]	0	0	0	0	0	0	0	0	0	0	0	0
Other Volume [veh/h]	0	0	0	0	0	0	0	0	0	0	0	0
Total Hourly Volume [veh/h]	28	1231	42	35	1225	7	25	0	81	114	0	180
Peak Hour Factor	1.0000	1.0000	1.0000	1.0000	1.0000	1.0000	1.0000	1.0000	1.0000	1.0000	1.0000	1.0000
Other Adjustment Factor	1.0000	1.0000	1.0000	1.0000	1.0000	1.0000	1.0000	1.0000	1.0000	1.0000	1.0000	1.0000
Total 15-Minute Volume [veh/h]	7	308	11	9	306	2	6	0	20	29	0	45
Total Analysis Volume [veh/h]	28	1231	42	35	1225	7	25	0	81	114	0	180
Pedestrian Volume [ped/h]	0			0			0			0		
Bicycle Volume [bicycles/h]	0			0			0			0		

Intersection Settings

Cycle Length [s]	100
Lost time [s]	10.00

Phasing & Timing

Control Type	Protecte	Permiss	Permiss	Protecte	Permiss	Permiss	Permiss	Permiss	Permiss	Permiss	Permiss	Permiss
Signal group	5	2	0	1	6	0	3	0	0	7	0	0
Auxiliary Signal Groups												
Lead / Lag	Lead	-	-	Lead	-	-	Lead	-	-	Lead	-	-

Movement, Approach, & Intersection Results

V/C, Movement V/C Ratio	0.02	0.38	0.03	0.02	0.38	0.00	0.02	0.00	0.07	0.07	0.00	0.28
Intersection LOS	C											
Intersection V/C	0.706											

Intersection Level Of Service Report
Intersection 14: Irwindale Avenue (NS) at 1st Street (EW)

Control Type:	Signalized	Delay (sec / veh):	-
Analysis Method:	ICU 1	Level Of Service:	A
Analysis Period:	15 minutes	Volume to Capacity (v/c):	0.461

Intersection Setup

Name	Irwindale Avenue			Irwindale Avenue			1st Street			1st Street		
Approach	Northbound			Southbound			Eastbound			Westbound		
Lane Configuration												
Turning Movement	Left	Thru	Right	Left	Thru	Right	Left	Thru	Right	Left	Thru	Right
Lane Width [ft]	12.00	12.00	12.00	12.00	12.00	12.00	12.00	12.00	12.00	12.00	12.00	12.00
No. of Lanes in Pocket	1	0	1	1	0	1	1	0	1	1	0	1
Pocket Length [ft]	100.00	100.00	70.00	120.00	100.00	240.00	90.00	100.00	95.00	75.00	100.00	75.00
Speed [mph]	35.00			35.00			35.00			25.00		
Grade [%]	0.00			0.00			0.00			0.00		
Crosswalk	Yes			No			Yes			Yes		

Volumes

Name	Irwindale Avenue			Irwindale Avenue			1st Street			1st Street		
Base Volume Input [veh/h]	11	878	4	9	1337	53	167	0	43	10	0	6
Base Volume Adjustment Factor	1.0000	1.0000	1.0000	1.0000	1.0000	1.0000	1.0000	1.0000	1.0000	1.0000	1.0000	1.0000
Heavy Vehicles Percentage [%]	2.00	2.00	2.00	2.00	2.00	2.00	2.00	2.00	2.00	2.00	2.00	2.00
Growth Rate	1.01	1.01	1.01	1.01	1.01	1.01	1.01	1.01	1.01	1.01	1.01	1.01
In-Process Volume [veh/h]	0	0	0	0	0	0	0	0	0	0	0	0
Site-Generated Trips [veh/h]	0	56	0	0	8	0	0	0	0	0	0	0
Diverted Trips [veh/h]	0	0	0	0	0	0	0	0	0	0	0	0
Pass-by Trips [veh/h]	0	0	0	0	0	0	0	0	0	0	0	0
Existing Site Adjustment Volume [veh/h]	0	0	0	0	0	0	0	0	0	0	0	0
Other Volume [veh/h]	0	0	0	0	0	0	0	0	0	0	0	0
Total Hourly Volume [veh/h]	11	943	4	9	1358	54	169	0	43	10	0	6
Peak Hour Factor	1.0000	1.0000	1.0000	1.0000	1.0000	1.0000	1.0000	1.0000	1.0000	1.0000	1.0000	1.0000
Other Adjustment Factor	1.0000	1.0000	1.0000	1.0000	1.0000	1.0000	1.0000	1.0000	1.0000	1.0000	1.0000	1.0000
Total 15-Minute Volume [veh/h]	3	236	1	2	340	14	42	0	11	3	0	2
Total Analysis Volume [veh/h]	11	943	4	9	1358	54	169	0	43	10	0	6
Pedestrian Volume [ped/h]	0			0			0			0		
Bicycle Volume [bicycles/h]	0			0			0			0		

Intersection Settings

Cycle Length [s]	100
Lost time [s]	10.00

Phasing & Timing

Control Type	Permiss	Permiss	Permiss	Permiss	Permiss	Permiss	Split	Split	Split	Split	Split	Split
Signal group	0	2	0	0	6	0	0	8	0	0	4	0
Auxiliary Signal Groups												
Lead / Lag	-	-	-	-	-	-	-	-	-	-	-	-

Movement, Approach, & Intersection Results

V/C, Movement V/C Ratio	0.01	0.30	0.30	0.01	0.28	0.03	0.05	0.00	0.03	0.01	0.00	0.00
Intersection LOS	A											
Intersection V/C	0.461											

Intersection Level Of Service Report
Intersection 15: Irwindale Avenue (NS) at Gladstone Street (EW)

Control Type:	Signalized	Delay (sec / veh):	-
Analysis Method:	ICU 1	Level Of Service:	B
Analysis Period:	15 minutes	Volume to Capacity (v/c):	0.654

Intersection Setup

Name	Irwindale Avenue			Irwindale Avenue			Gladstone Street			Gladstone Street		
Approach	Northbound			Southbound			Eastbound			Westbound		
Lane Configuration												
Turning Movement	Left	Thru	Right	Left	Thru	Right	Left	Thru	Right	Left	Thru	Right
Lane Width [ft]	12.00	12.00	12.00	12.00	12.00	12.00	12.00	12.00	12.00	12.00	12.00	12.00
No. of Lanes in Pocket	1	0	0	2	0	0	1	0	0	1	0	1
Pocket Length [ft]	120.00	100.00	100.00	210.00	100.00	100.00	50.00	100.00	100.00	200.00	100.00	190.00
Speed [mph]	35.00			35.00			25.00			40.00		
Grade [%]	0.00			0.00			0.00			0.00		
Crosswalk	Yes			Yes			Yes			Yes		

Volumes

Name	Irwindale Avenue			Irwindale Avenue			Gladstone Street			Gladstone Street		
Base Volume Input [veh/h]	1	687	308	530	889	8	5	85	27	150	4	207
Base Volume Adjustment Factor	1.0000	1.0000	1.0000	1.0000	1.0000	1.0000	1.0000	1.0000	1.0000	1.0000	1.0000	1.0000
Heavy Vehicles Percentage [%]	2.00	2.00	2.00	2.00	2.00	2.00	2.00	2.00	2.00	2.00	2.00	2.00
Growth Rate	1.01	1.01	1.01	1.01	1.01	1.01	1.01	1.01	1.01	1.01	1.01	1.01
In-Process Volume [veh/h]	0	0	0	0	0	0	0	0	0	0	0	0
Site-Generated Trips [veh/h]	0	0	0	8	0	0	0	0	0	0	0	56
Diverted Trips [veh/h]	0	0	0	0	0	0	0	0	0	0	0	0
Pass-by Trips [veh/h]	0	0	0	0	0	0	0	0	0	0	0	0
Existing Site Adjustment Volume [veh/h]	0	0	0	0	0	0	0	0	0	0	0	0
Other Volume [veh/h]	0	0	0	0	0	0	0	0	0	0	0	0
Total Hourly Volume [veh/h]	1	694	311	543	898	8	5	86	27	152	4	265
Peak Hour Factor	1.0000	1.0000	1.0000	1.0000	1.0000	1.0000	1.0000	1.0000	1.0000	1.0000	1.0000	1.0000
Other Adjustment Factor	1.0000	1.0000	1.0000	1.0000	1.0000	1.0000	1.0000	1.0000	1.0000	1.0000	1.0000	1.0000
Total 15-Minute Volume [veh/h]	0	174	78	136	225	2	1	22	7	38	1	66
Total Analysis Volume [veh/h]	1	694	311	543	898	8	5	86	27	152	4	265
Pedestrian Volume [ped/h]	0			0			0			0		
Bicycle Volume [bicycles/h]	0			0			0			0		

Intersection Settings

Cycle Length [s]	100
Lost time [s]	10.00

Phasing & Timing

Control Type	Protecte	Permiss	Permiss	Protecte	Permiss	Permiss	Permiss	Permiss	Permiss	Permiss	Permiss	Overlap
Signal group	5	2	0	1	6	0	0	8	0	0	4	4
Auxiliary Signal Groups												1,4
Lead / Lag	Lead	-	-	Lead	-	-	-	-	-	-	-	-

Movement, Approach, & Intersection Results

V/C, Movement V/C Ratio	0.00	0.22	0.19	0.17	0.28	0.28	0.00	0.05	0.02	0.10	0.00	0.00
Intersection LOS	B											
Intersection V/C	0.654											

Intersection Level Of Service Report

Intersection 16: Irwindale Avenue (NS) at Arrow Highway (EW)

Control Type:	Signalized	Delay (sec / veh):	-
Analysis Method:	ICU 1	Level Of Service:	C
Analysis Period:	15 minutes	Volume to Capacity (v/c):	0.769

Intersection Setup

Name	Irwindale Avenue			Irwindale Avenue			Arrow Highway			Arrow Highway		
Approach	Northbound			Southbound			Eastbound			Westbound		
Lane Configuration												
Turning Movement	Left	Thru	Right	Left	Thru	Right	Left	Thru	Right	Left	Thru	Right
Lane Width [ft]	12.00	12.00	12.00	12.00	12.00	12.00	12.00	12.00	12.00	12.00	12.00	12.00
No. of Lanes in Pocket	1	0	0	1	0	1	2	0	0	1	0	0
Pocket Length [ft]	175.00	100.00	100.00	185.00	100.00	185.00	205.00	100.00	100.00	335.00	100.00	100.00
Speed [mph]	35.00			35.00			45.00			45.00		
Grade [%]	0.00			0.00			0.00			0.00		
Crosswalk	Yes			Yes			Yes			Yes		

Volumes

Name	Irwindale Avenue			Irwindale Avenue			Arrow Highway			Arrow Highway		
Base Volume Input [veh/h]	91	488	100	191	714	363	373	1315	73	99	475	63
Base Volume Adjustment Factor	1.0000	1.0000	1.0000	1.0000	1.0000	1.0000	1.0000	1.0000	1.0000	1.0000	1.0000	1.0000
Heavy Vehicles Percentage [%]	2.00	2.00	2.00	2.00	2.00	2.00	2.00	2.00	2.00	2.00	2.00	2.00
Growth Rate	1.01	1.01	1.01	1.01	1.01	1.01	1.01	1.01	1.01	1.01	1.01	1.01
In-Process Volume [veh/h]	0	0	0	0	0	0	0	0	0	0	0	0
Site-Generated Trips [veh/h]	0	0	1	0	0	0	0	18	0	7	119	0
Diverted Trips [veh/h]	0	0	0	0	0	0	0	0	0	0	0	0
Pass-by Trips [veh/h]	0	0	0	0	0	0	0	0	0	0	0	0
Existing Site Adjustment Volume [veh/h]	0	0	0	0	0	0	0	0	0	0	0	0
Other Volume [veh/h]	0	0	0	0	0	0	0	0	0	0	0	0
Total Hourly Volume [veh/h]	92	493	102	193	721	367	377	1346	74	107	599	64
Peak Hour Factor	1.0000	1.0000	1.0000	1.0000	1.0000	1.0000	1.0000	1.0000	1.0000	1.0000	1.0000	1.0000
Other Adjustment Factor	1.0000	1.0000	1.0000	1.0000	1.0000	1.0000	1.0000	1.0000	1.0000	1.0000	1.0000	1.0000
Total 15-Minute Volume [veh/h]	23	123	26	48	180	92	94	337	19	27	150	16
Total Analysis Volume [veh/h]	92	493	102	193	721	367	377	1346	74	107	599	64
Pedestrian Volume [ped/h]	0			0			0			0		
Bicycle Volume [bicycles/h]	0			0			0			0		

Intersection Settings

Cycle Length [s]	100
Lost time [s]	10.00

Phasing & Timing

Control Type	Protecte	Permiss	Permiss	Protecte	Permiss	Overlap	Protecte	Permiss	Permiss	Protecte	Permiss	Permiss
Signal group	5	2	0	1	6	6	3	8	0	7	4	0
Auxiliary Signal Groups						3,6						
Lead / Lag	Lead	-	-	Lead	-	-	Lead	-	-	Lead	-	-

Movement, Approach, & Intersection Results

V/C, Movement V/C Ratio	0.06	0.19	0.19	0.12	0.23	0.11	0.12	0.30	0.30	0.07	0.21	0.21
Intersection LOS	C											
Intersection V/C	0.769											

Intersection Level Of Service Report

Intersection 17: Vincent Avenue (NS) at Gladstone Street (EW)

Control Type:	Signalized	Delay (sec / veh):	-
Analysis Method:	ICU 1	Level Of Service:	E
Analysis Period:	15 minutes	Volume to Capacity (v/c):	0.911

Intersection Setup

Name	Vincent Avenue			Vincent Avenue			Gladstone Street			Gladstone Street		
Approach	Northbound			Southbound			Eastbound			Westbound		
Lane Configuration												
Turning Movement	Left	Thru	Right	Left	Thru	Right	Left	Thru	Right	Left	Thru	Right
Lane Width [ft]	12.00	12.00	12.00	12.00	12.00	12.00	12.00	12.00	12.00	12.00	12.00	12.00
No. of Lanes in Pocket	1	0	0	0	0	0	2	0	0	1	0	0
Pocket Length [ft]	195.00	100.00	100.00	100.00	100.00	100.00	230.00	100.00	100.00	175.00	100.00	100.00
Speed [mph]	45.00			25.00			45.00			45.00		
Grade [%]	0.00			0.00			0.00			0.00		
Crosswalk	Yes			Yes			No			Yes		

Volumes

Name	Vincent Avenue			Vincent Avenue			Gladstone Street			Gladstone Street		
Base Volume Input [veh/h]	113	24	475	16	25	18	14	862	160	150	203	3
Base Volume Adjustment Factor	1.0000	1.0000	1.0000	1.0000	1.0000	1.0000	1.0000	1.0000	1.0000	1.0000	1.0000	1.0000
Heavy Vehicles Percentage [%]	2.00	2.00	2.00	2.00	2.00	2.00	2.00	2.00	2.00	2.00	2.00	2.00
Growth Rate	1.01	1.01	1.01	1.01	1.01	1.01	1.01	1.01	1.01	1.01	1.01	1.01
In-Process Volume [veh/h]	0	0	0	0	0	0	0	0	0	0	0	0
Site-Generated Trips [veh/h]	56	0	90	0	0	0	0	0	8	14	0	0
Diverted Trips [veh/h]	0	0	0	0	0	0	0	0	0	0	0	0
Pass-by Trips [veh/h]	0	0	0	0	0	0	0	0	0	0	0	0
Existing Site Adjustment Volume [veh/h]	0	0	0	0	0	0	0	0	0	0	0	0
Other Volume [veh/h]	0	0	0	0	0	0	0	0	0	0	0	0
Total Hourly Volume [veh/h]	170	24	570	16	25	18	14	871	170	166	205	3
Peak Hour Factor	1.0000	1.0000	1.0000	1.0000	1.0000	1.0000	1.0000	1.0000	1.0000	1.0000	1.0000	1.0000
Other Adjustment Factor	1.0000	1.0000	1.0000	1.0000	1.0000	1.0000	1.0000	1.0000	1.0000	1.0000	1.0000	1.0000
Total 15-Minute Volume [veh/h]	43	6	143	4	6	5	4	218	43	42	51	1
Total Analysis Volume [veh/h]	170	24	570	16	25	18	14	871	170	166	205	3
Pedestrian Volume [ped/h]	0			0			0			0		
Bicycle Volume [bicycles/h]	0			0			0			0		

Intersection Settings

Cycle Length [s]	100
Lost time [s]	10.00

Phasing & Timing

Control Type	Split	Split	Split	Split	Split	Split	Protecte	Permiss	Permiss	Protecte	Permiss	Permiss
Signal group	0	2	0	0	6	0	3	8	0	7	4	0
Auxiliary Signal Groups												
Lead / Lag	-	-	-	-	-	-	Lead	-	-	Lead	-	-

Movement, Approach, & Intersection Results

V/C, Movement V/C Ratio	0.11	0.02	0.36	0.01	0.03	0.03	0.00	0.33	0.33	0.10	0.07	0.07
Intersection LOS	E											
Intersection V/C	0.911											

Intersection Level Of Service Report

Intersection 18: Vincent Avenue (NS) at Arrow Highway (EW)

Control Type:	Signalized	Delay (sec / veh):	-
Analysis Method:	ICU 1	Level Of Service:	D
Analysis Period:	15 minutes	Volume to Capacity (v/c):	0.865

Intersection Setup

Name	Vincent Avenue			Vincent Avenue			Arrow Highway			Arrow Highway		
Approach	Northbound			Southbound			Eastbound			Westbound		
Lane Configuration												
Turning Movement	Left	Thru	Right	Left	Thru	Right	Left	Thru	Right	Left	Thru	Right
Lane Width [ft]	12.00	12.00	12.00	12.00	12.00	12.00	12.00	12.00	12.00	12.00	12.00	12.00
No. of Lanes in Pocket	1	0	0	1	0	0	1	0	0	1	0	0
Pocket Length [ft]	200.00	100.00	100.00	200.00	100.00	100.00	215.00	100.00	100.00	160.00	100.00	100.00
Speed [mph]	45.00			45.00			45.00			45.00		
Grade [%]	0.00			0.00			0.00			0.00		
Crosswalk	Yes			Yes			Yes			Yes		

Volumes

Name	Vincent Avenue			Vincent Avenue			Arrow Highway			Arrow Highway		
Base Volume Input [veh/h]	78	314	143	38	276	84	228	1417	171	106	485	40
Base Volume Adjustment Factor	1.0000	1.0000	1.0000	1.0000	1.0000	1.0000	1.0000	1.0000	1.0000	1.0000	1.0000	1.0000
Heavy Vehicles Percentage [%]	2.00	2.00	2.00	2.00	2.00	2.00	2.00	2.00	2.00	2.00	2.00	2.00
Growth Rate	1.01	1.01	1.01	1.01	1.01	1.01	1.01	1.01	1.01	1.01	1.01	1.01
In-Process Volume [veh/h]	0	0	0	0	0	0	0	0	0	0	0	0
Site-Generated Trips [veh/h]	126	146	24	0	22	0	0	0	19	4	0	0
Diverted Trips [veh/h]	0	0	0	0	0	0	0	0	0	0	0	0
Pass-by Trips [veh/h]	0	0	0	0	0	0	0	0	0	0	0	0
Existing Site Adjustment Volume [veh/h]	0	0	0	0	0	0	0	0	0	0	0	0
Other Volume [veh/h]	0	0	0	0	0	0	0	0	0	0	0	0
Total Hourly Volume [veh/h]	205	463	168	38	301	85	230	1431	192	111	490	40
Peak Hour Factor	1.0000	1.0000	1.0000	1.0000	1.0000	1.0000	1.0000	1.0000	1.0000	1.0000	1.0000	1.0000
Other Adjustment Factor	1.0000	1.0000	1.0000	1.0000	1.0000	1.0000	1.0000	1.0000	1.0000	1.0000	1.0000	1.0000
Total 15-Minute Volume [veh/h]	51	116	42	10	75	21	58	358	48	28	123	10
Total Analysis Volume [veh/h]	205	463	168	38	301	85	230	1431	192	111	490	40
Pedestrian Volume [ped/h]	0			0			0			0		
Bicycle Volume [bicycles/h]	0			0			0			0		

Intersection Settings

Cycle Length [s]	100
Lost time [s]	10.00

Phasing & Timing

Control Type	Permiss	Permiss	Permiss	Permiss	Permiss	Permiss	Permiss	Permiss	Permiss	Permiss	Permiss	Permiss
Signal group	0	2	0	0	6	0	0	8	0	0	4	0
Auxiliary Signal Groups												
Lead / Lag	-	-	-	-	-	-	-	-	-	-	-	-

Movement, Approach, & Intersection Results

V/C, Movement V/C Ratio	0.13	0.20	0.20	0.02	0.12	0.12	0.14	0.45	0.12	0.07	0.15	0.03
Intersection LOS	D											
Intersection V/C	0.865											

Intersection Level Of Service Report
Intersection 19: Vincent Avenue (NS) at Project North Driveway (EW)

Control Type:	Two-way stop	Delay (sec / veh):	17.3
Analysis Method:	HCM 6th Edition	Level Of Service:	C
Analysis Period:	15 minutes	Volume to Capacity (v/c):	0.353

Intersection Setup

Name	Vincent Avenue		Vincent Avenue		Project North Driveway	
Approach	Northbound		Southbound		Eastbound	
Lane Configuration						
Turning Movement	Left	Thru	Thru	Right	Left	Right
Lane Width [ft]	12.00	12.00	12.00	12.00	12.00	12.00
No. of Lanes in Pocket	0	0	0	0	0	0
Pocket Length [ft]	100.00	100.00	100.00	100.00	100.00	100.00
Speed [mph]	45.00		45.00		15.00	
Grade [%]	0.00		0.00		0.00	
Crosswalk	No		No		No	

Volumes

Name	Vincent Avenue		Vincent Avenue		Project North Driveway	
Base Volume Input [veh/h]	0	535	551	0	0	0
Base Volume Adjustment Factor	1.0000	1.0000	1.0000	1.0000	1.0000	1.0000
Heavy Vehicles Percentage [%]	2.00	2.00	2.00	2.00	2.00	2.00
Growth Rate	1.00	1.01	1.01	1.00	1.00	1.00
In-Process Volume [veh/h]	0	0	0	0	0	0
Site-Generated Trips [veh/h]	5	137	21	24	159	31
Diverted Trips [veh/h]	0	0	0	0	0	0
Pass-by Trips [veh/h]	0	0	0	0	0	0
Existing Site Adjustment Volume [veh/h]	0	0	0	0	0	0
Other Volume [veh/h]	0	0	0	0	0	0
Total Hourly Volume [veh/h]	5	677	578	24	159	31
Peak Hour Factor	1.0000	1.0000	1.0000	1.0000	1.0000	1.0000
Other Adjustment Factor	1.0000	1.0000	1.0000	1.0000	1.0000	1.0000
Total 15-Minute Volume [veh/h]	1	169	145	6	40	8
Total Analysis Volume [veh/h]	5	677	578	24	159	31
Pedestrian Volume [ped/h]	0		0		0	

Intersection Settings

Priority Scheme	Free	Free	Stop
Flared Lane			
Storage Area [veh]	0	0	0
Two-Stage Gap Acceptance			Yes
Number of Storage Spaces in Median	0	0	2

Movement, Approach, & Intersection Results

V/C, Movement V/C Ratio	0.01	0.01	0.01	0.00	0.35	0.04
d_M, Delay for Movement [s/veh]	8.73	0.00	0.00	0.00	17.29	10.32
Movement LOS	A	A	A	A	C	B
95th-Percentile Queue Length [veh/ln]	0.02	0.00	0.00	0.00	1.57	0.14
95th-Percentile Queue Length [ft/ln]	0.39	0.00	0.00	0.00	39.22	3.43
d_A, Approach Delay [s/veh]	0.06		0.00		16.15	
Approach LOS	A		A		C	
d_I, Intersection Delay [s/veh]	2.11					
Intersection LOS	C					

Intersection Level Of Service Report
Intersection 20: Vincent Avenue (NS) at Project South Driveway (EW)

Control Type:	Two-way stop	Delay (sec / veh):	16.2
Analysis Method:	HCM 6th Edition	Level Of Service:	C
Analysis Period:	15 minutes	Volume to Capacity (v/c):	0.299

Intersection Setup

Name	Vincent Avenue		Vincent Avenue		Project South Driveway	
Approach	Northbound		Southbound		Eastbound	
Lane Configuration						
Turning Movement	Left	Thru	Thru	Right	Left	Right
Lane Width [ft]	12.00	12.00	12.00	12.00	12.00	12.00
No. of Lanes in Pocket	0	0	0	0	0	0
Pocket Length [ft]	100.00	100.00	100.00	100.00	100.00	100.00
Speed [mph]	45.00		45.00		15.00	
Grade [%]	0.00		0.00		0.00	
Crosswalk	No		No		No	

Volumes

Name	Vincent Avenue		Vincent Avenue		Project South Driveway	
Base Volume Input [veh/h]	0	535	551	0	0	0
Base Volume Adjustment Factor	1.0000	1.0000	1.0000	1.0000	1.0000	1.0000
Heavy Vehicles Percentage [%]	2.00	2.00	2.00	2.00	2.00	2.00
Growth Rate	1.00	1.01	1.01	1.00	1.00	1.00
In-Process Volume [veh/h]	0	0	0	0	0	0
Site-Generated Trips [veh/h]	8	5	31	21	137	52
Diverted Trips [veh/h]	0	0	0	0	0	0
Pass-by Trips [veh/h]	0	0	0	0	0	0
Existing Site Adjustment Volume [veh/h]	0	0	0	0	0	0
Other Volume [veh/h]	0	0	0	0	0	0
Total Hourly Volume [veh/h]	8	545	588	21	137	52
Peak Hour Factor	1.0000	1.0000	1.0000	1.0000	1.0000	1.0000
Other Adjustment Factor	1.0000	1.0000	1.0000	1.0000	1.0000	1.0000
Total 15-Minute Volume [veh/h]	2	136	147	5	34	13
Total Analysis Volume [veh/h]	8	545	588	21	137	52
Pedestrian Volume [ped/h]	0		0		0	

Intersection Settings

Priority Scheme	Free		Free		Stop	
Flared Lane						
Storage Area [veh]	0		0		0	
Two-Stage Gap Acceptance					Yes	
Number of Storage Spaces in Median	0		0		2	

Movement, Approach, & Intersection Results

V/C, Movement V/C Ratio	0.01	0.01	0.01	0.00	0.30	0.07
d_M, Delay for Movement [s/veh]	8.76	0.00	0.00	0.00	16.18	10.53
Movement LOS	A	A	A	A	C	B
95th-Percentile Queue Length [veh/ln]	0.03	0.00	0.00	0.00	1.24	0.24
95th-Percentile Queue Length [ft/ln]	0.63	0.00	0.00	0.00	31.05	5.98
d_A, Approach Delay [s/veh]	0.13		0.00		14.63	
Approach LOS	A		A		B	
d_I, Intersection Delay [s/veh]	2.10					
Intersection LOS	C					

Intersection Level Of Service Report

Intersection 21: Vincent Avenue (NS) at Cypress Street (EW)

Control Type:	Signalized	Delay (sec / veh):	-
Analysis Method:	ICU 1	Level Of Service:	C
Analysis Period:	15 minutes	Volume to Capacity (v/c):	0.734

Intersection Setup

Name	Vincent Avenue			Vincent Avenue			Cypress Street			Cypress Street		
Approach	Northbound			Southbound			Eastbound			Westbound		
Lane Configuration												
Turning Movement	Left	Thru	Right	Left	Thru	Right	Left	Thru	Right	Left	Thru	Right
Lane Width [ft]	12.00	12.00	12.00	12.00	12.00	12.00	12.00	12.00	12.00	12.00	12.00	12.00
No. of Lanes in Pocket	1	0	0	1	0	0	1	0	0	1	0	0
Pocket Length [ft]	120.00	100.00	100.00	120.00	100.00	100.00	100.00	100.00	100.00	150.00	100.00	100.00
Speed [mph]	40.00			45.00			40.00			40.00		
Grade [%]	0.00			0.00			0.00			0.00		
Crosswalk	Yes			Yes			Yes			Yes		

Volumes

Name	Vincent Avenue			Vincent Avenue			Cypress Street			Cypress Street		
Base Volume Input [veh/h]	59	447	138	59	448	30	88	984	112	92	295	41
Base Volume Adjustment Factor	1.0000	1.0000	1.0000	1.0000	1.0000	1.0000	1.0000	1.0000	1.0000	1.0000	1.0000	1.0000
Heavy Vehicles Percentage [%]	2.00	2.00	2.00	2.00	2.00	2.00	2.00	2.00	2.00	2.00	2.00	2.00
Growth Rate	1.01	1.01	1.01	1.01	1.01	1.01	1.01	1.01	1.01	1.01	1.01	1.01
In-Process Volume [veh/h]	0	0	0	0	0	0	0	0	0	0	0	0
Site-Generated Trips [veh/h]	0	11	0	7	69	7	1	0	0	0	0	1
Diverted Trips [veh/h]	0	0	0	0	0	0	0	0	0	0	0	0
Pass-by Trips [veh/h]	0	0	0	0	0	0	0	0	0	0	0	0
Existing Site Adjustment Volume [veh/h]	0	0	0	0	0	0	0	0	0	0	0	0
Other Volume [veh/h]	0	0	0	0	0	0	0	0	0	0	0	0
Total Hourly Volume [veh/h]	60	462	139	67	521	37	90	994	113	93	298	42
Peak Hour Factor	1.0000	1.0000	1.0000	1.0000	1.0000	1.0000	1.0000	1.0000	1.0000	1.0000	1.0000	1.0000
Other Adjustment Factor	1.0000	1.0000	1.0000	1.0000	1.0000	1.0000	1.0000	1.0000	1.0000	1.0000	1.0000	1.0000
Total 15-Minute Volume [veh/h]	15	116	35	17	130	9	23	249	28	23	75	11
Total Analysis Volume [veh/h]	60	462	139	67	521	37	90	994	113	93	298	42
Pedestrian Volume [ped/h]	0			0			0			0		
Bicycle Volume [bicycles/h]	0			0			0			0		

Intersection Settings

Cycle Length [s]	100
Lost time [s]	10.00

Phasing & Timing

Control Type	Permiss	Permiss	Permiss	Permiss	Permiss	Permiss	Permiss	Permiss	Permiss	Permiss	Permiss	Permiss
Signal group	0	2	0	0	6	0	0	8	0	0	4	0
Auxiliary Signal Groups												
Lead / Lag	-	-	-	-	-	-	-	-	-	-	-	-

Movement, Approach, & Intersection Results

V/C, Movement V/C Ratio	0.04	0.19	0.19	0.04	0.17	0.17	0.06	0.35	0.35	0.06	0.11	0.11
Intersection LOS	C											
Intersection V/C	0.734											

Intersection Level Of Service Report

Intersection 22: Vincent Avenue (NS) at San Bernardino Road (EW)

Control Type:	Signalized	Delay (sec / veh):	-
Analysis Method:	ICU 1	Level Of Service:	B
Analysis Period:	15 minutes	Volume to Capacity (v/c):	0.679

Intersection Setup

Name	Vincent Avenue			Vincent Avenue			San Bernardino Road			San Berardino Road		
Approach	Northbound			Southbound			Eastbound			Westbound		
Lane Configuration												
Turning Movement	Left	Thru	Right	Left	Thru	Right	Left	Thru	Right	Left	Thru	Right
Lane Width [ft]	12.00	12.00	12.00	12.00	12.00	12.00	12.00	12.00	12.00	12.00	12.00	12.00
No. of Lanes in Pocket	1	0	0	1	0	0	1	0	0	1	0	0
Pocket Length [ft]	120.00	100.00	100.00	150.00	100.00	100.00	150.00	100.00	100.00	165.00	100.00	100.00
Speed [mph]	35.00			40.00			40.00			40.00		
Grade [%]	0.00			0.00			0.00			0.00		
Crosswalk	Yes			Yes			Yes			Yes		

Volumes

Name	Vincent Avenue			Vincent Avenue			San Bernardino Road			San Berardino Road		
Base Volume Input [veh/h]	94	563	77	76	574	48	112	651	110	98	273	80
Base Volume Adjustment Factor	1.0000	1.0000	1.0000	1.0000	1.0000	1.0000	1.0000	1.0000	1.0000	1.0000	1.0000	1.0000
Heavy Vehicles Percentage [%]	2.00	2.00	2.00	2.00	2.00	2.00	2.00	2.00	2.00	2.00	2.00	2.00
Growth Rate	1.01	1.01	1.01	1.01	1.01	1.01	1.01	1.01	1.01	1.01	1.01	1.01
In-Process Volume [veh/h]	0	0	0	0	0	0	0	0	0	0	0	0
Site-Generated Trips [veh/h]	0	11	0	0	69	0	0	0	0	0	0	0
Diverted Trips [veh/h]	0	0	0	0	0	0	0	0	0	0	0	0
Pass-by Trips [veh/h]	0	0	0	0	0	0	0	0	0	0	0	0
Existing Site Adjustment Volume [veh/h]	0	0	0	0	0	0	0	0	0	0	0	0
Other Volume [veh/h]	0	0	0	0	0	0	0	0	0	0	0	0
Total Hourly Volume [veh/h]	95	580	78	77	649	48	113	658	111	99	276	81
Peak Hour Factor	1.0000	1.0000	1.0000	1.0000	1.0000	1.0000	1.0000	1.0000	1.0000	1.0000	1.0000	1.0000
Other Adjustment Factor	1.0000	1.0000	1.0000	1.0000	1.0000	1.0000	1.0000	1.0000	1.0000	1.0000	1.0000	1.0000
Total 15-Minute Volume [veh/h]	24	145	20	19	162	12	28	165	28	25	69	20
Total Analysis Volume [veh/h]	95	580	78	77	649	48	113	658	111	99	276	81
Pedestrian Volume [ped/h]	0			0			0			0		
Bicycle Volume [bicycles/h]	0			0			0			0		

Intersection Settings

Cycle Length [s]	100
Lost time [s]	10.00

Phasing & Timing

Control Type	Permiss	Permiss	Permiss	Permiss	Permiss	Permiss	Protecte	Permiss	Permiss	Protecte	Permiss	Permiss
Signal group	0	2	0	0	6	0	3	8	0	7	4	0
Auxiliary Signal Groups												
Lead / Lag	-	-	-	-	-	-	Lead	-	-	Lead	-	-

Movement, Approach, & Intersection Results

V/C, Movement V/C Ratio	0.06	0.21	0.21	0.05	0.22	0.22	0.07	0.24	0.24	0.06	0.11	0.11
Intersection LOS	B											
Intersection V/C	0.679											

Intersection Level Of Service Report
Intersection 23: Vincent Avenue (NS) at Badillo Street (EW)

Control Type:	Signalized	Delay (sec / veh):	-
Analysis Method:	ICU 1	Level Of Service:	C
Analysis Period:	15 minutes	Volume to Capacity (v/c):	0.780

Intersection Setup

Name	Vincent Avenue			Vincent Avenue			Dadillo Street			Badillo Street		
Approach	Northbound			Southbound			Eastbound			Westbound		
Lane Configuration												
Turning Movement	Left	Thru	Right	Left	Thru	Right	Left	Thru	Right	Left	Thru	Right
Lane Width [ft]	12.00	12.00	12.00	12.00	12.00	12.00	12.00	12.00	12.00	12.00	12.00	12.00
No. of Lanes in Pocket	1	0	0	1	0	0	1	0	0	1	0	0
Pocket Length [ft]	200.00	100.00	100.00	190.00	100.00	100.00	195.00	100.00	100.00	195.00	100.00	100.00
Speed [mph]	40.00			35.00			45.00			45.00		
Grade [%]	0.00			0.00			0.00			0.00		
Crosswalk	Yes			Yes			Yes			Yes		

Volumes

Name	Vincent Avenue			Vincent Avenue			Dadillo Street			Badillo Street		
Base Volume Input [veh/h]	93	584	144	62	702	53	65	953	172	130	421	56
Base Volume Adjustment Factor	1.0000	1.0000	1.0000	1.0000	1.0000	1.0000	1.0000	1.0000	1.0000	1.0000	1.0000	1.0000
Heavy Vehicles Percentage [%]	2.00	2.00	2.00	2.00	2.00	2.00	2.00	2.00	2.00	2.00	2.00	2.00
Growth Rate	1.01	1.01	1.01	1.01	1.01	1.01	1.01	1.01	1.01	1.01	1.01	1.01
In-Process Volume [veh/h]	0	0	0	0	0	0	0	0	0	0	0	0
Site-Generated Trips [veh/h]	0	9	0	7	55	7	1	0	0	0	0	1
Diverted Trips [veh/h]	0	0	0	0	0	0	0	0	0	0	0	0
Pass-by Trips [veh/h]	0	0	0	0	0	0	0	0	0	0	0	0
Existing Site Adjustment Volume [veh/h]	0	0	0	0	0	0	0	0	0	0	0	0
Other Volume [veh/h]	0	0	0	0	0	0	0	0	0	0	0	0
Total Hourly Volume [veh/h]	94	599	145	70	764	61	67	963	174	131	425	58
Peak Hour Factor	1.0000	1.0000	1.0000	1.0000	1.0000	1.0000	1.0000	1.0000	1.0000	1.0000	1.0000	1.0000
Other Adjustment Factor	1.0000	1.0000	1.0000	1.0000	1.0000	1.0000	1.0000	1.0000	1.0000	1.0000	1.0000	1.0000
Total 15-Minute Volume [veh/h]	24	150	36	18	191	15	17	241	44	33	106	15
Total Analysis Volume [veh/h]	94	599	145	70	764	61	67	963	174	131	425	58
Pedestrian Volume [ped/h]	0			0			0			0		
Bicycle Volume [bicycles/h]	0			0			0			0		

Intersection Settings

Cycle Length [s]	100
Lost time [s]	10.00

Phasing & Timing

Control Type	Protecte	Permiss	Permiss	Protecte	Permiss	Permiss	Protecte	Permiss	Permiss	Protecte	Permiss	Permiss
Signal group	5	2	0	1	6	0	3	8	0	7	4	0
Auxiliary Signal Groups												
Lead / Lag	Lead	-	-	Lead	-	-	Lead	-	-	Lead	-	-

Movement, Approach, & Intersection Results

V/C, Movement V/C Ratio	0.06	0.19	0.09	0.04	0.24	0.04	0.04	0.30	0.11	0.08	0.13	0.04
Intersection LOS	C											
Intersection V/C	0.780											

Intersection Level Of Service Report
Intersection 24: Vincent Avenue (NS) at Puente Avenue (EW)

Control Type:	Signalized	Delay (sec / veh):	-
Analysis Method:	ICU 1	Level Of Service:	B
Analysis Period:	15 minutes	Volume to Capacity (v/c):	0.650

Intersection Setup

Name	Vincent Avenue			Vincent Avenue			Puente Avenue			Puente Avenue		
Approach	Northbound			Southbound			Eastbound			Westbound		
Lane Configuration												
Turning Movement	Left	Thru	Right	Left	Thru	Right	Left	Thru	Right	Left	Thru	Right
Lane Width [ft]	12.00	12.00	12.00	12.00	12.00	12.00	12.00	12.00	12.00	12.00	12.00	12.00
No. of Lanes in Pocket	1	0	0	1	0	0	0	0	0	0	0	0
Pocket Length [ft]	195.00	100.00	100.00	195.00	100.00	100.00	100.00	100.00	100.00	100.00	100.00	100.00
Speed [mph]	40.00			40.00			40.00			40.00		
Grade [%]	0.00			0.00			0.00			0.00		
Crosswalk	Yes			Yes			Yes			Yes		

Volumes

Name	Vincent Avenue			Vincent Avenue			Puente Avenue			Puente Avenue		
Base Volume Input [veh/h]	73	727	78	63	832	60	75	540	67	48	265	37
Base Volume Adjustment Factor	1.0000	1.0000	1.0000	1.0000	1.0000	1.0000	1.0000	1.0000	1.0000	1.0000	1.0000	1.0000
Heavy Vehicles Percentage [%]	2.00	2.00	2.00	2.00	2.00	2.00	2.00	2.00	2.00	2.00	2.00	2.00
Growth Rate	1.01	1.01	1.01	1.01	1.01	1.01	1.01	1.01	1.01	1.01	1.01	1.01
In-Process Volume [veh/h]	0	0	0	0	0	0	0	0	0	0	0	0
Site-Generated Trips [veh/h]	0	9	0	0	55	0	0	0	0	0	0	0
Diverted Trips [veh/h]	0	0	0	0	0	0	0	0	0	0	0	0
Pass-by Trips [veh/h]	0	0	0	0	0	0	0	0	0	0	0	0
Existing Site Adjustment Volume [veh/h]	0	0	0	0	0	0	0	0	0	0	0	0
Other Volume [veh/h]	0	0	0	0	0	0	0	0	0	0	0	0
Total Hourly Volume [veh/h]	74	743	79	64	895	61	76	545	68	48	268	37
Peak Hour Factor	1.0000	1.0000	1.0000	1.0000	1.0000	1.0000	1.0000	1.0000	1.0000	1.0000	1.0000	1.0000
Other Adjustment Factor	1.0000	1.0000	1.0000	1.0000	1.0000	1.0000	1.0000	1.0000	1.0000	1.0000	1.0000	1.0000
Total 15-Minute Volume [veh/h]	19	186	20	16	224	15	19	136	17	12	67	9
Total Analysis Volume [veh/h]	74	743	79	64	895	61	76	545	68	48	268	37
Pedestrian Volume [ped/h]	0			0			0			0		
Bicycle Volume [bicycles/h]	0			0			0			0		

Intersection Settings

Cycle Length [s]	100
Lost time [s]	10.00

Phasing & Timing

Control Type	Permiss	Permiss	Permiss	Permiss	Permiss	Permiss	Permiss	Permiss	Permiss	Permiss	Permiss	Permiss
Signal group	0	2	0	0	6	0	0	8	0	0	4	0
Auxiliary Signal Groups												
Lead / Lag	-	-	-	-	-	-	-	-	-	-	-	-

Movement, Approach, & Intersection Results

V/C, Movement V/C Ratio	0.05	0.23	0.05	0.04	0.28	0.04	0.05	0.19	0.04	0.03	0.10	0.02
Intersection LOS	B											
Intersection V/C	0.650											

Intersection Level Of Service Report

Intersection 25: Vincent Avenue (NS) at Rowland Avenue (EW)

Control Type:	Signalized	Delay (sec / veh):	-
Analysis Method:	ICU 1	Level Of Service:	B
Analysis Period:	15 minutes	Volume to Capacity (v/c):	0.615

Intersection Setup

Name	Vincent Avenue			Vincent Avenue			Rowland Avenue			Rowland Avenue		
Approach	Northbound			Southbound			Eastbound			Westbound		
Lane Configuration												
Turning Movement	Left	Thru	Right	Left	Thru	Right	Left	Thru	Right	Left	Thru	Right
Lane Width [ft]	12.00	12.00	12.00	12.00	12.00	12.00	12.00	12.00	12.00	12.00	12.00	12.00
No. of Lanes in Pocket	1	0	0	1	0	0	0	0	0	0	0	0
Pocket Length [ft]	145.00	100.00	100.00	125.00	100.00	100.00	100.00	100.00	100.00	100.00	100.00	100.00
Speed [mph]	35.00			40.00			35.00			35.00		
Grade [%]	0.00			0.00			0.00			0.00		
Crosswalk	Yes			Yes			Yes			Yes		

Volumes

Name	Vincent Avenue			Vincent Avenue			Rowland Avenue			Rowland Avenue		
Base Volume Input [veh/h]	33	840	113	98	849	18	14	206	49	69	93	31
Base Volume Adjustment Factor	1.0000	1.0000	1.0000	1.0000	1.0000	1.0000	1.0000	1.0000	1.0000	1.0000	1.0000	1.0000
Heavy Vehicles Percentage [%]	2.00	2.00	2.00	2.00	2.00	2.00	2.00	2.00	2.00	2.00	2.00	2.00
Growth Rate	1.01	1.01	1.01	1.01	1.01	1.01	1.01	1.01	1.01	1.01	1.01	1.01
In-Process Volume [veh/h]	0	0	0	0	0	0	0	0	0	0	0	0
Site-Generated Trips [veh/h]	0	7	0	5	45	5	1	0	0	0	0	1
Diverted Trips [veh/h]	0	0	0	0	0	0	0	0	0	0	0	0
Pass-by Trips [veh/h]	0	0	0	0	0	0	0	0	0	0	0	0
Existing Site Adjustment Volume [veh/h]	0	0	0	0	0	0	0	0	0	0	0	0
Other Volume [veh/h]	0	0	0	0	0	0	0	0	0	0	0	0
Total Hourly Volume [veh/h]	33	855	114	104	902	23	15	208	49	70	94	32
Peak Hour Factor	1.0000	1.0000	1.0000	1.0000	1.0000	1.0000	1.0000	1.0000	1.0000	1.0000	1.0000	1.0000
Other Adjustment Factor	1.0000	1.0000	1.0000	1.0000	1.0000	1.0000	1.0000	1.0000	1.0000	1.0000	1.0000	1.0000
Total 15-Minute Volume [veh/h]	8	214	29	26	226	6	4	52	12	18	24	8
Total Analysis Volume [veh/h]	33	855	114	104	902	23	15	208	49	70	94	32
Pedestrian Volume [ped/h]	0			0			0			0		
Bicycle Volume [bicycles/h]	0			0			0			0		

Intersection Settings

Cycle Length [s]	100
Lost time [s]	10.00

Phasing & Timing

Control Type	Protecte	Permiss	Permiss	Protecte	Permiss	Permiss	Permiss	Permiss	Permiss	Permiss	Permiss	Permiss
Signal group	5	2	0	1	6	0	0	8	0	0	4	0
Auxiliary Signal Groups												
Lead / Lag	Lead	-	-	Lead	-	-	-	-	-	-	-	-

Movement, Approach, & Intersection Results

V/C, Movement V/C Ratio	0.02	0.27	0.07	0.07	0.28	0.01	0.01	0.14	0.03	0.04	0.10	0.02
Intersection LOS	B											
Intersection V/C	0.615											

Intersection Level Of Service Report

Intersection 26: Vincent Avenue (NS) at Workman Avenue (EW)

Control Type:	Signalized	Delay (sec / veh):	-
Analysis Method:	ICU 1	Level Of Service:	B
Analysis Period:	15 minutes	Volume to Capacity (v/c):	0.693

Intersection Setup

Name	Vincent Avenue			Vincent Avenue			Workman Avenue			Workman Avenue		
Approach	Northbound			Southbound			Eastbound			Westbound		
Lane Configuration												
Turning Movement	Left	Thru	Right	Left	Thru	Right	Left	Thru	Right	Left	Thru	Right
Lane Width [ft]	12.00	12.00	12.00	12.00	12.00	12.00	12.00	12.00	12.00	12.00	12.00	12.00
No. of Lanes in Pocket	1	0	0	1	0	0	0	0	0	0	0	0
Pocket Length [ft]	120.00	100.00	100.00	180.00	100.00	100.00	100.00	100.00	100.00	100.00	100.00	100.00
Speed [mph]	35.00			40.00			35.00			35.00		
Grade [%]	0.00			0.00			0.00			0.00		
Crosswalk	Yes			Yes			Yes			Yes		

Volumes

Name	Vincent Avenue			Vincent Avenue			Workman Avenue			Workman Avenue		
Base Volume Input [veh/h]	91	947	198	81	856	24	17	257	64	108	143	47
Base Volume Adjustment Factor	1.0000	1.0000	1.0000	1.0000	1.0000	1.0000	1.0000	1.0000	1.0000	1.0000	1.0000	1.0000
Heavy Vehicles Percentage [%]	2.00	2.00	2.00	2.00	2.00	2.00	2.00	2.00	2.00	2.00	2.00	2.00
Growth Rate	1.01	1.01	1.01	1.01	1.01	1.01	1.01	1.01	1.01	1.01	1.01	1.01
In-Process Volume [veh/h]	0	0	0	0	0	0	0	0	0	0	0	0
Site-Generated Trips [veh/h]	0	7	0	0	45	0	0	0	0	0	0	0
Diverted Trips [veh/h]	0	0	0	0	0	0	0	0	0	0	0	0
Pass-by Trips [veh/h]	0	0	0	0	0	0	0	0	0	0	0	0
Existing Site Adjustment Volume [veh/h]	0	0	0	0	0	0	0	0	0	0	0	0
Other Volume [veh/h]	0	0	0	0	0	0	0	0	0	0	0	0
Total Hourly Volume [veh/h]	92	963	200	82	910	24	17	260	65	109	144	47
Peak Hour Factor	1.0000	1.0000	1.0000	1.0000	1.0000	1.0000	1.0000	1.0000	1.0000	1.0000	1.0000	1.0000
Other Adjustment Factor	1.0000	1.0000	1.0000	1.0000	1.0000	1.0000	1.0000	1.0000	1.0000	1.0000	1.0000	1.0000
Total 15-Minute Volume [veh/h]	23	241	50	21	228	6	4	65	16	27	36	12
Total Analysis Volume [veh/h]	92	963	200	82	910	24	17	260	65	109	144	47
Pedestrian Volume [ped/h]	0			0			0			0		
Bicycle Volume [bicycles/h]	0			0			0			0		

Intersection Settings

Cycle Length [s]	100
Lost time [s]	10.00

Phasing & Timing

Control Type	Protecte	Permiss	Permiss	Protecte	Permiss	Permiss	Permiss	Permiss	Permiss	Permiss	Permiss	Permiss
Signal group	5	2	0	1	6	0	0	8	0	0	4	0
Auxiliary Signal Groups												
Lead / Lag	Lead	-	-	Lead	-	-	-	-	-	-	-	-

Movement, Approach, & Intersection Results

V/C, Movement V/C Ratio	0.06	0.30	0.13	0.05	0.28	0.02	0.01	0.17	0.04	0.07	0.16	0.03
Intersection LOS	B											
Intersection V/C	0.693											

Intersection Level Of Service Report
Intersection 27: Vincent Avenue (NS) at I-10 WB Ramps (EW)

Control Type:	Signalized	Delay (sec / veh):	-
Analysis Method:	ICU 1	Level Of Service:	A
Analysis Period:	15 minutes	Volume to Capacity (v/c):	0.461

Intersection Setup

Name	Vincent Avenue		Vincent Avenue		I-10 WB Ramps	
Approach	Northbound		Southbound		Westbound	
Lane Configuration						
Turning Movement	Thru	Right	Left	Thru	Left	Right
Lane Width [ft]	12.00	12.00	12.00	12.00	12.00	12.00
No. of Lanes in Pocket	0	0	0	0	0	1
Pocket Length [ft]	100.00	100.00	100.00	100.00	100.00	220.00
Speed [mph]	35.00		35.00		35.00	
Grade [%]	0.00		0.00		0.00	
Crosswalk	No		No		Yes	

Volumes

Name	Vincent Avenue		Vincent Avenue		I-10 WB Ramps	
Base Volume Input [veh/h]	1060	0	0	1075	393	194
Base Volume Adjustment Factor	1.0000	1.0000	1.0000	1.0000	1.0000	1.0000
Heavy Vehicles Percentage [%]	2.00	2.00	2.00	2.00	2.00	2.00
Growth Rate	1.01	1.00	1.00	1.01	1.01	1.01
In-Process Volume [veh/h]	0	0	0	0	0	0
Site-Generated Trips [veh/h]	2	0	0	45	0	5
Diverted Trips [veh/h]	0	0	0	0	0	0
Pass-by Trips [veh/h]	0	0	0	0	0	0
Existing Site Adjustment Volume [veh/h]	0	0	0	0	0	0
Other Volume [veh/h]	0	0	0	0	0	0
Total Hourly Volume [veh/h]	1073	0	0	1131	397	201
Peak Hour Factor	1.0000	1.0000	1.0000	1.0000	1.0000	1.0000
Other Adjustment Factor	1.0000	1.0000	1.0000	1.0000	1.0000	1.0000
Total 15-Minute Volume [veh/h]	268	0	0	283	99	50
Total Analysis Volume [veh/h]	1073	0	0	1131	397	201
Pedestrian Volume [ped/h]	0		0		0	
Bicycle Volume [bicycles/h]	0		0		0	

Intersection Settings

Cycle Length [s]	100
Lost time [s]	10.00

Phasing & Timing

Control Type	Permissive	Permissive	Permissive	Permissive	Split	Split
Signal group	2	0	0	6	7	0
Auxiliary Signal Groups						
Lead / Lag	-	-	-	-	Lead	-

Movement, Approach, & Intersection Results

V/C, Movement V/C Ratio	0.22	0.00	0.00	0.24	0.12	0.13
Intersection LOS	A					
Intersection V/C	0.461					

Intersection Level Of Service Report
Intersection 28: Vincent Avenue (NS) at I-10 EB Ramps (EW)

Control Type:	Signalized	Delay (sec / veh):	-
Analysis Method:	ICU 1	Level Of Service:	A
Analysis Period:	15 minutes	Volume to Capacity (v/c):	0.542

Intersection Setup

Name	Vincent Avenue			Vincent Avenue			I-10 EB Ramps			I-10 EB Ramps		
Approach	Northbound			Southbound			Eastbound			Westbound		
Lane Configuration												
Turning Movement	Left	Thru	Right	Left	Thru	Right	Left	Thru	Right	Left	Thru	Right
Lane Width [ft]	12.00	12.00	12.00	12.00	12.00	12.00	12.00	12.00	12.00	12.00	12.00	12.00
No. of Lanes in Pocket	0	0	0	0	0	0	0	0	0	0	0	0
Pocket Length [ft]	100.00	100.00	100.00	100.00	100.00	100.00	100.00	100.00	100.00	100.00	100.00	100.00
Speed [mph]	35.00			35.00			35.00			35.00		
Grade [%]	0.00			0.00			0.00			0.00		
Crosswalk	No			No			Yes			Yes		

Volumes

Name	Vincent Avenue			Vincent Avenue			I-10 EB Ramps			I-10 EB Ramps		
Base Volume Input [veh/h]	0	903	711	0	1381	340	160	0	129	0	0	0
Base Volume Adjustment Factor	1.0000	1.0000	1.0000	1.0000	1.0000	1.0000	1.0000	1.0000	1.0000	1.0000	1.0000	1.0000
Heavy Vehicles Percentage [%]	2.00	2.00	2.00	2.00	2.00	2.00	2.00	2.00	2.00	2.00	2.00	2.00
Growth Rate	1.00	1.01	1.01	1.00	1.01	1.01	1.01	1.00	1.01	1.00	1.00	1.00
In-Process Volume [veh/h]	0	0	0	0	0	0	0	0	0	0	0	0
Site-Generated Trips [veh/h]	0	0	0	7	0	24	2	0	0	0	0	0
Diverted Trips [veh/h]	0	0	0	0	0	0	0	0	0	0	0	0
Pass-by Trips [veh/h]	0	0	0	0	0	0	0	0	0	0	0	0
Existing Site Adjustment Volume [veh/h]	0	0	0	0	0	0	0	0	0	0	0	0
Other Volume [veh/h]	0	0	0	0	0	0	0	0	0	0	0	0
Total Hourly Volume [veh/h]	0	912	718	7	1395	367	164	0	130	0	0	0
Peak Hour Factor	1.0000	1.0000	1.0000	1.0000	1.0000	1.0000	1.0000	1.0000	1.0000	1.0000	1.0000	1.0000
Other Adjustment Factor	1.0000	1.0000	1.0000	1.0000	1.0000	1.0000	1.0000	1.0000	1.0000	1.0000	1.0000	1.0000
Total 15-Minute Volume [veh/h]	0	228	180	2	349	92	41	0	33	0	0	0
Total Analysis Volume [veh/h]	0	912	718	7	1395	367	164	0	130	0	0	0
Pedestrian Volume [ped/h]	0			0			0			0		
Bicycle Volume [bicycles/h]	0			0			0			0		

Intersection Settings

Cycle Length [s]	100
Lost time [s]	10.00

Phasing & Timing

Control Type	Permiss	Permiss	Permiss	Permiss	Permiss	Permiss	Split	Permiss	Split	Permiss	Permiss	Permiss
Signal group	0	2	0	0	6	0	3	0	0	0	0	0
Auxiliary Signal Groups												
Lead / Lag	-	-	-	-	-	-	Lead	-	-	-	-	-

Movement, Approach, & Intersection Results

V/C, Movement V/C Ratio	0.00	0.34	0.34	0.00	0.29	0.23	0.10	0.00	0.04	0.00	0.00	0.00
Intersection LOS	A											
Intersection V/C	0.542											

Intersection Level Of Service Report

Intersection 29: Vernon Ave/Lark Ellen Ave (NS) at Gladstone Street (EW)

Control Type:	Signalized	Delay (sec / veh):	-
Analysis Method:	ICU 1	Level Of Service:	C
Analysis Period:	15 minutes	Volume to Capacity (v/c):	0.752

Intersection Setup

Name	Lark Ellen Avenue			Vernon Avenue			Gladstone Street			Gladstone Street		
Approach	Northbound			Southbound			Eastbound			Westbound		
Lane Configuration												
Turning Movement	Left	Thru	Right	Left	Thru	Right	Left	Thru	Right	Left	Thru	Right
Lane Width [ft]	12.00	12.00	12.00	12.00	12.00	12.00	12.00	12.00	12.00	12.00	12.00	12.00
No. of Lanes in Pocket	1	0	0	1	0	0	1	0	0	1	0	0
Pocket Length [ft]	60.00	100.00	100.00	60.00	100.00	100.00	70.00	100.00	100.00	60.00	100.00	100.00
Speed [mph]	35.00			35.00			45.00			45.00		
Grade [%]	0.00			0.00			0.00			0.00		
Crosswalk	Yes			Yes			Yes			Yes		

Volumes

Name	Lark Ellen Avenue			Vernon Avenue			Gladstone Street			Gladstone Street		
Base Volume Input [veh/h]	41	335	161	42	424	62	167	992	74	92	238	29
Base Volume Adjustment Factor	1.0000	1.0000	1.0000	1.0000	1.0000	1.0000	1.0000	1.0000	1.0000	1.0000	1.0000	1.0000
Heavy Vehicles Percentage [%]	2.00	2.00	2.00	2.00	2.00	2.00	2.00	2.00	2.00	2.00	2.00	2.00
Growth Rate	1.01	1.01	1.01	1.01	1.01	1.01	1.01	1.01	1.01	1.01	1.01	1.01
In-Process Volume [veh/h]	0	0	0	0	0	0	0	0	0	0	0	0
Site-Generated Trips [veh/h]	0	0	0	0	0	4	26	64	0	0	10	0
Diverted Trips [veh/h]	0	0	0	0	0	0	0	0	0	0	0	0
Pass-by Trips [veh/h]	0	0	0	0	0	0	0	0	0	0	0	0
Existing Site Adjustment Volume [veh/h]	0	0	0	0	0	0	0	0	0	0	0	0
Other Volume [veh/h]	0	0	0	0	0	0	0	0	0	0	0	0
Total Hourly Volume [veh/h]	41	338	163	42	428	67	195	1066	75	93	250	29
Peak Hour Factor	1.0000	1.0000	1.0000	1.0000	1.0000	1.0000	1.0000	1.0000	1.0000	1.0000	1.0000	1.0000
Other Adjustment Factor	1.0000	1.0000	1.0000	1.0000	1.0000	1.0000	1.0000	1.0000	1.0000	1.0000	1.0000	1.0000
Total 15-Minute Volume [veh/h]	10	85	41	11	107	17	49	267	19	23	63	7
Total Analysis Volume [veh/h]	41	338	163	42	428	67	195	1066	75	93	250	29
Pedestrian Volume [ped/h]	0			0			0			0		
Bicycle Volume [bicycles/h]	0			0			0			0		

Intersection Settings

Cycle Length [s]	100
Lost time [s]	10.00

Phasing & Timing

Control Type	Permiss	Permiss	Permiss	Permiss	Permiss	Permiss	Permiss	Permiss	Permiss	Permiss	Permiss	Permiss
Signal group	0	2	0	0	6	0	0	8	0	0	4	0
Auxiliary Signal Groups												
Lead / Lag	-	-	-	-	-	-	-	-	-	-	-	-

Movement, Approach, & Intersection Results

V/C, Movement V/C Ratio	0.03	0.21	0.10	0.03	0.15	0.15	0.12	0.36	0.36	0.06	0.09	0.09
Intersection LOS	C											
Intersection V/C	0.752											

Intersection Level Of Service Report
Intersection 30: Azusa Avenue (NS) at I-210 EB Ramps (EW)

Control Type:	Signalized	Delay (sec / veh):	-
Analysis Method:	ICU 1	Level Of Service:	B
Analysis Period:	15 minutes	Volume to Capacity (v/c):	0.676

Intersection Setup

Name	Azusa Avenue		Azusa Avenue		I-210 EB Ramps	
Approach	Northbound		Southbound		Eastbound	
Lane Configuration						
Turning Movement	Left	Thru	Thru	Right	Left	Right
Lane Width [ft]	12.00	12.00	12.00	12.00	12.00	12.00
No. of Lanes in Pocket	0	0	0	0	0	0
Pocket Length [ft]	100.00	100.00	100.00	100.00	100.00	100.00
Speed [mph]	35.00		35.00		35.00	
Grade [%]	0.00		0.00		0.00	
Crosswalk	No		No		Yes	

Volumes

Name	Azusa Avenue		Azusa Avenue		I-210 EB Ramps	
Base Volume Input [veh/h]	0	1131	795	0	131	321
Base Volume Adjustment Factor	1.0000	1.0000	1.0000	1.0000	1.0000	1.0000
Heavy Vehicles Percentage [%]	2.00	2.00	2.00	2.00	2.00	2.00
Growth Rate	1.00	1.01	1.01	1.00	1.01	1.01
In-Process Volume [veh/h]	0	0	0	0	0	0
Site-Generated Trips [veh/h]	0	52	8	0	0	0
Diverted Trips [veh/h]	0	0	0	0	0	0
Pass-by Trips [veh/h]	0	0	0	0	0	0
Existing Site Adjustment Volume [veh/h]	0	0	0	0	0	0
Other Volume [veh/h]	0	0	0	0	0	0
Total Hourly Volume [veh/h]	0	1194	811	0	132	324
Peak Hour Factor	1.0000	1.0000	1.0000	1.0000	1.0000	1.0000
Other Adjustment Factor	1.0000	1.0000	1.0000	1.0000	1.0000	1.0000
Total 15-Minute Volume [veh/h]	0	299	203	0	33	81
Total Analysis Volume [veh/h]	0	1194	811	0	132	324
Pedestrian Volume [ped/h]	0		0		0	
Bicycle Volume [bicycles/h]	0		0		0	

Intersection Settings

Cycle Length [s]	100
Lost time [s]	10.00

Phasing & Timing

Control Type	Permissive	Permissive	Permissive	Permissive	Split	Split
Signal group	0	2	6	0	3	0
Auxiliary Signal Groups						
Lead / Lag	-	-	-	-	Lead	-

Movement, Approach, & Intersection Results

V/C, Movement V/C Ratio	0.00	0.37	0.25	0.00	0.04	0.20
Intersection LOS	B					
Intersection V/C	0.676					

Intersection Level Of Service Report

Intersection 31: Azusa Avenue (NS) at Paramount Street (EW)

Control Type:	Signalized	Delay (sec / veh):	-
Analysis Method:	ICU 1	Level Of Service:	B
Analysis Period:	15 minutes	Volume to Capacity (v/c):	0.639

Intersection Setup

Name	Azusa Avenue			Azusa Avenue			Paramount Street			Paramount Street		
Approach	Northbound			Southbound			Eastbound			Westbound		
Lane Configuration												
Turning Movement	Left	Thru	Right	Left	Thru	Right	Left	Thru	Right	Left	Thru	Right
Lane Width [ft]	12.00	12.00	12.00	12.00	12.00	12.00	12.00	12.00	12.00	12.00	12.00	12.00
No. of Lanes in Pocket	1	0	0	1	0	0	0	0	0	0	0	0
Pocket Length [ft]	200.00	100.00	100.00	110.00	100.00	100.00	100.00	100.00	100.00	100.00	100.00	100.00
Speed [mph]	35.00			35.00			25.00			15.00		
Grade [%]	0.00			0.00			0.00			0.00		
Crosswalk	No			Yes			Yes			Yes		

Volumes

Name	Azusa Avenue			Azusa Avenue			Paramount Street			Paramount Street		
Base Volume Input [veh/h]	91	923	4	27	966	51	170	1	87	17	7	36
Base Volume Adjustment Factor	1.0000	1.0000	1.0000	1.0000	1.0000	1.0000	1.0000	1.0000	1.0000	1.0000	1.0000	1.0000
Heavy Vehicles Percentage [%]	2.00	2.00	2.00	2.00	2.00	2.00	2.00	2.00	2.00	2.00	2.00	2.00
Growth Rate	1.01	1.01	1.01	1.01	1.01	1.01	1.01	1.01	1.01	1.01	1.01	1.01
In-Process Volume [veh/h]	0	0	0	0	0	0	0	0	0	0	0	0
Site-Generated Trips [veh/h]	0	52	0	0	8	0	0	0	0	0	0	0
Diverted Trips [veh/h]	0	0	0	0	0	0	0	0	0	0	0	0
Pass-by Trips [veh/h]	0	0	0	0	0	0	0	0	0	0	0	0
Existing Site Adjustment Volume [veh/h]	0	0	0	0	0	0	0	0	0	0	0	0
Other Volume [veh/h]	0	0	0	0	0	0	0	0	0	0	0	0
Total Hourly Volume [veh/h]	92	984	4	27	984	52	172	1	88	17	7	36
Peak Hour Factor	1.0000	1.0000	1.0000	1.0000	1.0000	1.0000	1.0000	1.0000	1.0000	1.0000	1.0000	1.0000
Other Adjustment Factor	1.0000	1.0000	1.0000	1.0000	1.0000	1.0000	1.0000	1.0000	1.0000	1.0000	1.0000	1.0000
Total 15-Minute Volume [veh/h]	23	246	1	7	246	13	43	0	22	4	2	9
Total Analysis Volume [veh/h]	92	984	4	27	984	52	172	1	88	17	7	36
Pedestrian Volume [ped/h]	0			0			0			0		
Bicycle Volume [bicycles/h]	0			0			0			0		

Intersection Settings

Cycle Length [s]	100
Lost time [s]	10.00

Phasing & Timing

Control Type	Permiss	Permiss	Permiss	Permiss	Permiss	Permiss	Permiss	Permiss	Permiss	Permiss	Permiss	Permiss
Signal group	0	2	0	0	6	0	0	8	0	0	4	0
Auxiliary Signal Groups												
Lead / Lag	-	-	-	-	-	-	-	-	-	-	-	-

Movement, Approach, & Intersection Results

V/C, Movement V/C Ratio	0.06	0.31	0.00	0.02	0.31	0.03	0.11	0.16	0.16	0.01	0.04	0.04
Intersection LOS	B											
Intersection V/C	0.639											

Intersection Level Of Service Report

Intersection 32: Azusa Avenue (NS) at Gladstone Street (EW)

Control Type:	Signalized	Delay (sec / veh):	-
Analysis Method:	ICU 1	Level Of Service:	C
Analysis Period:	15 minutes	Volume to Capacity (v/c):	0.743

Intersection Setup

Name	Azusa Avenue			Azusa Avenue			Gladstone Street			Gladstone Street		
Approach	Northbound			Southbound			Eastbound			Westbound		
Lane Configuration												
Turning Movement	Left	Thru	Right	Left	Thru	Right	Left	Thru	Right	Left	Thru	Right
Lane Width [ft]	12.00	12.00	12.00	12.00	12.00	12.00	12.00	12.00	12.00	12.00	12.00	12.00
No. of Lanes in Pocket	1	0	1	2	0	0	1	0	0	1	0	0
Pocket Length [ft]	190.00	100.00	190.00	190.00	100.00	100.00	150.00	100.00	100.00	150.00	100.00	100.00
Speed [mph]	35.00			35.00			40.00			40.00		
Grade [%]	0.00			0.00			0.00			0.00		
Crosswalk	Yes			Yes			Yes			Yes		

Volumes

Name	Azusa Avenue			Azusa Avenue			Gladstone Street			Gladstone Street		
Base Volume Input [veh/h]	79	668	150	214	716	57	212	762	79	122	287	73
Base Volume Adjustment Factor	1.0000	1.0000	1.0000	1.0000	1.0000	1.0000	1.0000	1.0000	1.0000	1.0000	1.0000	1.0000
Heavy Vehicles Percentage [%]	2.00	2.00	2.00	2.00	2.00	2.00	2.00	2.00	2.00	2.00	2.00	2.00
Growth Rate	1.01	1.01	1.01	1.01	1.01	1.01	1.01	1.01	1.01	1.01	1.01	1.01
In-Process Volume [veh/h]	0	0	0	0	0	0	0	0	0	0	0	0
Site-Generated Trips [veh/h]	0	0	0	0	0	8	52	12	0	0	2	0
Diverted Trips [veh/h]	0	0	0	0	0	0	0	0	0	0	0	0
Pass-by Trips [veh/h]	0	0	0	0	0	0	0	0	0	0	0	0
Existing Site Adjustment Volume [veh/h]	0	0	0	0	0	0	0	0	0	0	0	0
Other Volume [veh/h]	0	0	0	0	0	0	0	0	0	0	0	0
Total Hourly Volume [veh/h]	80	675	152	216	723	66	266	782	80	123	292	74
Peak Hour Factor	1.0000	1.0000	1.0000	1.0000	1.0000	1.0000	1.0000	1.0000	1.0000	1.0000	1.0000	1.0000
Other Adjustment Factor	1.0000	1.0000	1.0000	1.0000	1.0000	1.0000	1.0000	1.0000	1.0000	1.0000	1.0000	1.0000
Total 15-Minute Volume [veh/h]	20	169	38	54	181	17	67	196	20	31	73	19
Total Analysis Volume [veh/h]	80	675	152	216	723	66	266	782	80	123	292	74
Pedestrian Volume [ped/h]	0			0			0			0		
Bicycle Volume [bicycles/h]	0			0			0			0		

Intersection Settings

Cycle Length [s]	100
Lost time [s]	10.00

Phasing & Timing

Control Type	Protecte	Permiss	Overlap	Protecte	Permiss	Permiss	Protecte	Permiss	Permiss	Protecte	Permiss	Permiss
Signal group	5	2	2	1	6	0	3	8	0	7	4	0
Auxiliary Signal Groups			2,7									
Lead / Lag	Lead	-	-	Lead	-	-	Lead	-	-	Lead	-	-

Movement, Approach, & Intersection Results

V/C, Movement V/C Ratio	0.05	0.21	0.02	0.07	0.25	0.25	0.17	0.27	0.27	0.08	0.11	0.11
Intersection LOS	C											
Intersection V/C	0.743											

Intersection Level Of Service Report

Intersection 33: San Gabriel Ave/Azusa Ave (NS) at 1st St (EW)

Control Type:	Signalized	Delay (sec / veh):	-
Analysis Method:	ICU 1	Level Of Service:	B
Analysis Period:	15 minutes	Volume to Capacity (v/c):	0.672

Intersection Setup

Name												
Approach	Northbound			Southbound			Eastbound			Westbound		
Lane Configuration												
Turning Movement	Left	Thru	Right	Left	Thru	Right	Left	Thru	Right	Left	Thru	Right
Lane Width [ft]	12.00	12.00	12.00	12.00	12.00	12.00	12.00	12.00	12.00	12.00	12.00	12.00
No. of Lanes in Pocket	0	0	0	0	0	0	0	0	0	0	0	0
Pocket Length [ft]	100.00	100.00	100.00	100.00	100.00	100.00	100.00	100.00	100.00	100.00	100.00	100.00
Speed [mph]	35.00			35.00			35.00			35.00		
Grade [%]	0.00			0.00			0.00			0.00		
Crosswalk	No			Yes			Yes			Yes		

Volumes

Name												
Base Volume Input [veh/h]	78	505	330	117	837	20	72	175	85	288	164	148
Base Volume Adjustment Factor	1.0000	1.0000	1.0000	1.0000	1.0000	1.0000	1.0000	1.0000	1.0000	1.0000	1.0000	1.0000
Heavy Vehicles Percentage [%]	2.00	2.00	2.00	2.00	2.00	2.00	2.00	2.00	2.00	2.00	2.00	2.00
Growth Rate	1.06	1.06	1.06	1.06	1.06	1.06	1.06	1.06	1.06	1.06	1.06	1.06
In-Process Volume [veh/h]	0	0	0	0	0	0	0	0	0	0	0	0
Site-Generated Trips [veh/h]	0	0	0	0	0	0	0	0	0	8	0	0
Diverted Trips [veh/h]	0	0	0	0	0	0	0	0	0	0	0	0
Pass-by Trips [veh/h]	0	0	0	0	0	0	0	0	0	0	0	0
Existing Site Adjustment Volume [veh/h]	0	0	0	0	0	0	0	0	0	0	0	0
Other Volume [veh/h]	0	0	0	0	0	0	0	0	0	0	0	0
Total Hourly Volume [veh/h]	83	535	350	124	887	21	76	186	90	313	174	157
Peak Hour Factor	0.9690	0.9690	0.9690	0.9690	0.9690	0.9690	0.9690	0.9690	0.9690	0.9690	0.9690	0.9690
Other Adjustment Factor	1.0000	1.0000	1.0000	1.0000	1.0000	1.0000	1.0000	1.0000	1.0000	1.0000	1.0000	1.0000
Total 15-Minute Volume [veh/h]	21	138	90	32	229	5	20	48	23	81	45	41
Total Analysis Volume [veh/h]	86	552	361	128	915	22	78	192	93	323	180	162
Pedestrian Volume [ped/h]	0			0			0			0		
Bicycle Volume [bicycles/h]	0			0			0			0		

Intersection Settings

Cycle Length [s]	100
Lost time [s]	10.00

Phasing & Timing

Control Type	Protecte	Permiss	Permiss	Protecte	Permiss	Permiss	Protecte	Permiss	Permiss	Protecte	Permiss	Permiss
Signal group	5	2	0	1	6	0	3	8	0	7	4	0
Auxiliary Signal Groups												
Lead / Lag	Lead	-	-	Lead	-	-	Lead	-	-	Lead	-	-

Movement, Approach, & Intersection Results

V/C, Movement V/C Ratio	0.05	0.17	0.23	0.08	0.29	0.01	0.05	0.12	0.06	0.10	0.11	0.11
Intersection LOS	B											
Intersection V/C	0.672											

Intersection Level Of Service Report

Intersection 34: Alameda Ave/I-210 WB Ramps (NS) at 1st St (EW)

Control Type:	Signalized	Delay (sec / veh):	-
Analysis Method:	ICU 1	Level Of Service:	C
Analysis Period:	15 minutes	Volume to Capacity (v/c):	0.704

Intersection Setup

Name												
Approach	Northbound			Southbound			Eastbound			Westbound		
Lane Configuration												
Turning Movement	Left	Thru	Right	Left	Thru	Right	Left	Thru	Right	Left	Thru	Right
Lane Width [ft]	12.00	12.00	12.00	12.00	12.00	12.00	12.00	12.00	12.00	12.00	12.00	12.00
No. of Lanes in Pocket	1	0	0	1	0	1	1	0	1	1	0	1
Pocket Length [ft]	325.00	100.00	100.00	50.00	100.00	150.00	55.00	100.00	100.00	100.00	100.00	110.00
Speed [mph]	35.00			35.00			35.00			35.00		
Grade [%]	0.00			0.00			0.00			0.00		
Crosswalk	Yes			Yes			Yes			Yes		

Volumes

Name												
Base Volume Input [veh/h]	366	87	94	46	24	38	20	604	207	177	305	43
Base Volume Adjustment Factor	1.0000	1.0000	1.0000	1.0000	1.0000	1.0000	1.0000	1.0000	1.0000	1.0000	1.0000	1.0000
Heavy Vehicles Percentage [%]	2.00	2.00	2.00	2.00	2.00	2.00	2.00	2.00	2.00	2.00	2.00	2.00
Growth Rate	1.02	1.02	1.02	1.02	1.02	1.02	1.02	1.02	1.02	1.02	1.02	1.02
In-Process Volume [veh/h]	0	0	0	0	0	0	0	0	0	0	0	0
Site-Generated Trips [veh/h]	8	0	0	0	0	0	0	0	0	0	0	0
Diverted Trips [veh/h]	0	0	0	0	0	0	0	0	0	0	0	0
Pass-by Trips [veh/h]	0	0	0	0	0	0	0	0	0	0	0	0
Existing Site Adjustment Volume [veh/h]	0	0	0	0	0	0	0	0	0	0	0	0
Other Volume [veh/h]	0	0	0	0	0	0	0	0	0	0	0	0
Total Hourly Volume [veh/h]	381	89	96	47	24	39	20	616	211	181	311	44
Peak Hour Factor	0.9400	0.9400	0.9400	0.9400	0.9400	0.9400	0.9400	0.9400	0.9400	0.9400	0.9400	0.9400
Other Adjustment Factor	1.0000	1.0000	1.0000	1.0000	1.0000	1.0000	1.0000	1.0000	1.0000	1.0000	1.0000	1.0000
Total 15-Minute Volume [veh/h]	101	24	26	13	6	10	5	164	56	48	83	12
Total Analysis Volume [veh/h]	405	95	102	50	26	41	21	655	224	193	331	47
Pedestrian Volume [ped/h]	0			0			0			0		
Bicycle Volume [bicycles/h]	0			0			0			0		

Intersection Settings

Cycle Length [s]	100
Lost time [s]	10.00

Phasing & Timing

Control Type	Permiss	Permiss	Permiss	Permiss	Permiss	Permiss	Permiss	Permiss	Permiss	Permiss	Permiss	Permiss
Signal group	0	2	0	0	6	0	0	8	0	0	4	0
Auxiliary Signal Groups												
Lead / Lag	-	-	-	-	-	-	-	-	-	-	-	-

Movement, Approach, & Intersection Results

V/C, Movement V/C Ratio	0.25	0.12	0.12	0.03	0.02	0.03	0.01	0.20	0.14	0.12	0.21	0.03
Intersection LOS	C											
Intersection V/C	0.704											

FUTURE BASELINE WITH PROJECT – WITH IMPROVEMENTS

Vincent Avenue Industrial Building

Vistro File: G:\...\AMC.vistro
Report File: G:\...\FBP AM IMP.pdf

Scenario 5 Future Baseline With Project With Improvements
5/6/2020

Intersection Analysis Summary

ID	Intersection Name	Control Type	Method	Worst Mvmt	V/C	Delay (s/veh)	LOS
2	I-605 NB Ramps (NS) at Live Oak Avenue (EW)	Signalized	ICU 1	WB Thru	0.802	-	D
7	Arrow Highway (NS) at Live Oak Ave/Arrow Hwy (EW)	Signalized	ICU 1	WB Thru	0.518	-	A
9	Santa Fe Dam/Azusa Canyon Road (NS) at Arrow Highway (EW)	Signalized	ICU 1	WB Right	0.757	-	C
17	Vincent Avenue (NS) at Gladstone Street (EW)	Signalized	ICU 1	WB Thru	0.529	-	A
34	Alameda Ave/I-210 WB Ramps NS) at 1st St (EW)	Signalized	ICU 1	WB Thru	0.754	-	C

V/C, Delay, LOS: For two-way stop, these values are taken from the movement with the worst (highest) delay value. For all other control types, they are taken for the whole intersection.

Intersection Level Of Service Report
Intersection 2: I-605 NB Ramps (NS) at Live Oak Avenue (EW)

Control Type:	Signalized	Delay (sec / veh):	-
Analysis Method:	ICU 1	Level Of Service:	D
Analysis Period:	15 minutes	Volume to Capacity (v/c):	0.802

Intersection Setup

Name	I-605 NB Ramps			I-605 NB Ramps			Live Oak Avenue			Live Oak Avenue		
Approach	Northbound			Southbound			Eastbound			Westbound		
Lane Configuration												
Turning Movement	Left	Thru	Right	Left	Thru	Right	Left	Thru	Right	Left	Thru	Right
Lane Width [ft]	12.00	12.00	12.00	12.00	12.00	12.00	12.00	12.00	12.00	12.00	12.00	12.00
No. of Lanes in Pocket	0	0	0	0	0	0	0	0	0	0	0	0
Pocket Length [ft]	100.00	100.00	100.00	100.00	100.00	100.00	100.00	100.00	100.00	100.00	100.00	100.00
Speed [mph]	35.00			35.00			45.00			45.00		
Grade [%]	0.00			0.00			0.00			0.00		
Crosswalk	Yes			Yes			No			No		

Volumes

Name	I-605 NB Ramps			I-605 NB Ramps			Live Oak Avenue			Live Oak Avenue		
Base Volume Input [veh/h]	0	0	469	0	0	432	0	262	0	0	1205	0
Base Volume Adjustment Factor	1.0000	1.0000	1.0000	1.0000	1.0000	1.0000	1.0000	1.0000	1.0000	1.0000	1.0000	1.0000
Heavy Vehicles Percentage [%]	2.00	2.00	2.00	2.00	2.00	2.00	2.00	2.00	2.00	2.00	2.00	2.00
Growth Rate	1.00	1.00	1.01	1.00	1.00	1.01	1.00	1.01	1.00	1.00	1.01	1.00
In-Process Volume [veh/h]	0	0	0	0	0	0	0	0	0	0	0	0
Site-Generated Trips [veh/h]	0	0	105	0	0	0	0	0	0	0	14	0
Diverted Trips [veh/h]	0	0	0	0	0	0	0	0	0	0	0	0
Pass-by Trips [veh/h]	0	0	0	0	0	0	0	0	0	0	0	0
Existing Site Adjustment Volume [veh/h]	0	0	0	0	0	0	0	0	0	0	0	0
Other Volume [veh/h]	0	0	0	0	0	0	0	0	0	0	0	0
Total Hourly Volume [veh/h]	0	0	579	0	0	436	0	265	0	0	1231	0
Peak Hour Factor	1.0000	1.0000	1.0000	1.0000	1.0000	1.0000	1.0000	1.0000	1.0000	1.0000	1.0000	1.0000
Other Adjustment Factor	1.0000	1.0000	1.0000	1.0000	1.0000	1.0000	1.0000	1.0000	1.0000	1.0000	1.0000	1.0000
Total 15-Minute Volume [veh/h]	0	0	145	0	0	109	0	66	0	0	308	0
Total Analysis Volume [veh/h]	0	0	579	0	0	436	0	265	0	0	1231	0
Pedestrian Volume [ped/h]	0			0			0			0		
Bicycle Volume [bicycles/h]	0			0			0			0		

Intersection Settings

Cycle Length [s]	100
Lost time [s]	10.00

Phasing & Timing

Control Type	Permiss	Permiss	Permiss	Permiss	Permiss	Permiss	Permiss	Permiss	Permiss	Permiss	Permiss	Permiss
Signal group	0	0	2	0	0	6	0	8	0	0	4	0
Auxiliary Signal Groups												
Lead / Lag	-	-	-	-	-	-	-	-	-	-	-	-

Movement, Approach, & Intersection Results

V/C, Movement V/C Ratio	0.00	0.00	0.18	0.00	0.00	0.14	0.00	0.08	0.00	0.00	0.38	0.00
Intersection LOS	D											
Intersection V/C	0.802											

Intersection Level Of Service Report
Intersection 7: Arrow Highway (NS) at Live Oak Ave/Arrow Hwy (EW)

Control Type:	Signalized	Delay (sec / veh):	-
Analysis Method:	ICU 1	Level Of Service:	A
Analysis Period:	15 minutes	Volume to Capacity (v/c):	0.518

Intersection Setup

Name			Live Oak Avenue		Arrow Highway	
Approach	Southbound		Eastbound		Westbound	
Lane Configuration						
Turning Movement	Left	Right	Left	Thru	Thru	Right
Lane Width [ft]	12.00	12.00	12.00	12.00	12.00	12.00
No. of Lanes in Pocket	0	0	1	0	0	0
Pocket Length [ft]	100.00	100.00	160.00	100.00	100.00	100.00
Speed [mph]	35.00		45.00		45.00	
Grade [%]	0.00		0.00		0.00	
Crosswalk	No		Yes		No	

Volumes

Name			Live Oak Avenue		Arrow Highway	
Base Volume Input [veh/h]	296	59	113	634	1117	1772
Base Volume Adjustment Factor	1.0000	1.0000	1.0000	1.0000	1.0000	1.0000
Heavy Vehicles Percentage [%]	2.00	2.00	2.00	2.00	2.00	2.00
Growth Rate	1.01	1.01	1.01	1.01	1.01	1.00
In-Process Volume [veh/h]	0	0	0	0	0	0
Site-Generated Trips [veh/h]	13	0	0	113	15	2
Diverted Trips [veh/h]	0	0	0	0	0	0
Pass-by Trips [veh/h]	0	0	0	0	0	0
Existing Site Adjustment Volume [veh/h]	0	0	0	0	0	0
Other Volume [veh/h]	0	0	0	0	0	0
Total Hourly Volume [veh/h]	312	60	114	753	1143	1774
Peak Hour Factor	1.0000	1.0000	1.0000	1.0000	1.0000	1.0000
Other Adjustment Factor	1.0000	1.0000	1.0000	1.0000	1.0000	1.0000
Total 15-Minute Volume [veh/h]	78	15	29	188	286	444
Total Analysis Volume [veh/h]	312	60	114	753	1143	1774
Pedestrian Volume [ped/h]	0		0		0	
Bicycle Volume [bicycles/h]	0		0		0	

Intersection Settings

Cycle Length [s]	100
Lost time [s]	10.00

Phasing & Timing

Control Type	Permissive	Permissive	Permissive	Permissive	Permissive	Unsignalized
Signal group	1	0	0	8	4	0
Auxiliary Signal Groups						
Lead / Lag	Lead	-	-	-	-	-

Movement, Approach, & Intersection Results

V/C, Movement V/C Ratio	0.10	0.04	0.07	0.16	0.24	0.00
Intersection LOS	A					
Intersection V/C	0.518					

Intersection Level Of Service Report

Intersection 9: Santa Fe Dam/Azusa Canyon Road (NS) at Arrow Highway (EW)

Control Type:	Signalized	Delay (sec / veh):	-
Analysis Method:	ICU 1	Level Of Service:	C
Analysis Period:	15 minutes	Volume to Capacity (v/c):	0.757

Intersection Setup

Name	Azusa Canyon Road						Arrow Highway			Arrow Highway		
Approach	Northbound			Southbound			Eastbound			Westbound		
Lane Configuration												
Turning Movement	Left	Thru	Right	Left	Thru	Right	Left	Thru	Right	Left	Thru	Right
Lane Width [ft]	12.00	12.00	12.00	12.00	12.00	12.00	12.00	12.00	12.00	12.00	12.00	12.00
No. of Lanes in Pocket	1	0	0	0	0	0	1	0	0	1	0	0
Pocket Length [ft]	200.00	100.00	100.00	100.00	100.00	100.00	185.00	100.00	100.00	180.00	100.00	100.00
Speed [mph]	35.00			35.00			45.00			45.00		
Grade [%]	0.00			0.00			0.00			0.00		
Crosswalk	Yes			Yes			No			Yes		

Volumes

Name	Azusa Canyon Road						Arrow Highway			Arrow Highway		
Base Volume Input [veh/h]	837	14	145	11	3	12	19	624	122	67	1708	23
Base Volume Adjustment Factor	1.0000	1.0000	1.0000	1.0000	1.0000	1.0000	1.0000	1.0000	1.0000	1.0000	1.0000	1.0000
Heavy Vehicles Percentage [%]	2.00	2.00	2.00	2.00	2.00	2.00	2.00	2.00	2.00	2.00	2.00	2.00
Growth Rate	1.01	1.00	1.01	1.00	1.00	1.00	1.00	1.01	1.01	1.01	1.01	1.00
In-Process Volume [veh/h]	0	0	0	0	0	0	0	0	0	0	0	0
Site-Generated Trips [veh/h]	0	0	8	0	0	0	0	126	0	1	17	0
Diverted Trips [veh/h]	0	0	0	0	0	0	0	0	0	0	0	0
Pass-by Trips [veh/h]	0	0	0	0	0	0	0	0	0	0	0	0
Existing Site Adjustment Volume [veh/h]	0	0	0	0	0	0	0	0	0	0	0	0
Other Volume [veh/h]	0	0	0	0	0	0	0	0	0	0	0	0
Total Hourly Volume [veh/h]	845	14	154	11	3	12	19	756	123	69	1742	23
Peak Hour Factor	1.0000	1.0000	1.0000	1.0000	1.0000	1.0000	1.0000	1.0000	1.0000	1.0000	1.0000	1.0000
Other Adjustment Factor	1.0000	1.0000	1.0000	1.0000	1.0000	1.0000	1.0000	1.0000	1.0000	1.0000	1.0000	1.0000
Total 15-Minute Volume [veh/h]	211	4	39	3	1	3	5	189	31	17	436	6
Total Analysis Volume [veh/h]	845	14	154	11	3	12	19	756	123	69	1742	23
Pedestrian Volume [ped/h]	0			0			0			0		
Bicycle Volume [bicycles/h]	0			0			0			0		

Intersection Settings

Cycle Length [s]	100
Lost time [s]	10.00

Phasing & Timing

Control Type	Split	Split	Split	Split	Split	Split	Protecte	Permiss	Permiss	Protecte	Permiss	Permiss
Signal group	0	2	0	0	6	0	3	8	0	7	4	0
Auxiliary Signal Groups												
Lead / Lag	-	-	-	-	-	-	Lead	-	-	Lead	-	-

Movement, Approach, & Intersection Results

V/C, Movement V/C Ratio	0.26	0.27	0.10	0.01	0.01	0.01	0.01	0.18	0.18	0.04	0.37	0.37
Intersection LOS	C											
Intersection V/C	0.757											

Intersection Level Of Service Report
Intersection 17: Vincent Avenue (NS) at Gladstone Street (EW)

Control Type:	Signalized	Delay (sec / veh):	-
Analysis Method:	ICU 1	Level Of Service:	A
Analysis Period:	15 minutes	Volume to Capacity (v/c):	0.529

Intersection Setup

Name	Vincent Avenue			Vincent Avenue			Gladstone Street			Gladstone Street		
Approach	Northbound			Southbound			Eastbound			Westbound		
Lane Configuration												
Turning Movement	Left	Thru	Right	Left	Thru	Right	Left	Thru	Right	Left	Thru	Right
Lane Width [ft]	12.00	12.00	12.00	12.00	12.00	12.00	12.00	12.00	12.00	12.00	12.00	12.00
No. of Lanes in Pocket	1	0	0	0	0	0	2	0	0	1	0	0
Pocket Length [ft]	195.00	100.00	100.00	100.00	100.00	100.00	230.00	100.00	100.00	175.00	100.00	100.00
Speed [mph]	45.00			25.00			45.00			45.00		
Grade [%]	0.00			0.00			0.00			0.00		
Crosswalk	Yes			Yes			No			Yes		

Volumes

Name	Vincent Avenue			Vincent Avenue			Gladstone Street			Gladstone Street		
Base Volume Input [veh/h]	265	29	147	16	8	38	43	97	64	178	942	2
Base Volume Adjustment Factor	1.0000	1.0000	1.0000	1.0000	1.0000	1.0000	1.0000	1.0000	1.0000	1.0000	1.0000	1.0000
Heavy Vehicles Percentage [%]	2.00	2.00	2.00	2.00	2.00	2.00	2.00	2.00	2.00	2.00	2.00	2.00
Growth Rate	1.01	1.01	1.01	1.01	1.01	1.01	1.01	1.01	1.01	1.01	1.01	1.01
In-Process Volume [veh/h]	0	0	0	0	0	0	0	0	0	0	0	0
Site-Generated Trips [veh/h]	8	0	14	0	0	0	0	0	64	102	0	0
Diverted Trips [veh/h]	0	0	0	0	0	0	0	0	0	0	0	0
Pass-by Trips [veh/h]	0	0	0	0	0	0	0	0	0	0	0	0
Existing Site Adjustment Volume [veh/h]	0	0	0	0	0	0	0	0	0	0	0	0
Other Volume [veh/h]	0	0	0	0	0	0	0	0	0	0	0	0
Total Hourly Volume [veh/h]	276	29	162	16	8	38	43	98	129	282	951	2
Peak Hour Factor	1.0000	1.0000	1.0000	1.0000	1.0000	1.0000	1.0000	1.0000	1.0000	1.0000	1.0000	1.0000
Other Adjustment Factor	1.0000	1.0000	1.0000	1.0000	1.0000	1.0000	1.0000	1.0000	1.0000	1.0000	1.0000	1.0000
Total 15-Minute Volume [veh/h]	69	7	41	4	2	10	11	25	32	71	238	1
Total Analysis Volume [veh/h]	276	29	162	16	8	38	43	98	129	282	951	2
Pedestrian Volume [ped/h]	0			0			0			0		
Bicycle Volume [bicycles/h]	0			0			0			0		

Intersection Settings

Cycle Length [s]	100
Lost time [s]	10.00

Phasing & Timing

Control Type	Split	Split	Split	Split	Split	Split	Protecte	Permiss	Permiss	Protecte	Permiss	Permiss
Signal group	0	2	0	0	6	0	3	8	0	7	4	0
Auxiliary Signal Groups												
Lead / Lag	-	-	-	-	-	-	Lead	-	-	Lead	-	-

Movement, Approach, & Intersection Results

V/C, Movement V/C Ratio	0.09	0.10	0.10	0.01	0.03	0.03	0.01	0.07	0.07	0.18	0.30	0.30
Intersection LOS	A											
Intersection V/C	0.529											

Intersection Level Of Service Report
Intersection 34: Alameda Ave/I-210 WB Ramps NS) at 1st St (EW)

Control Type:	Signalized	Delay (sec / veh):	-
Analysis Method:	ICU 1	Level Of Service:	C
Analysis Period:	15 minutes	Volume to Capacity (v/c):	0.754

Intersection Setup

Name											
Approach	Northbound			Southbound			Eastbound			Westbound		
Lane Configuration												
Turning Movement	Left	Thru	Right	Left	Thru	Right	Left	Thru	Right	Left	Thru	Right
Lane Width [ft]	12.00	12.00	12.00	12.00	12.00	12.00	12.00	12.00	12.00	12.00	12.00	12.00
No. of Lanes in Pocket	1	0	0	1	0	1	1	0	1	1	0	1
Pocket Length [ft]	325.00	100.00	100.00	50.00	100.00	150.00	55.00	100.00	100.00	100.00	100.00	110.00
Speed [mph]	35.00			35.00			35.00			35.00		
Grade [%]	0.00			0.00			0.00			0.00		
Crosswalk	Yes			Yes			Yes			Yes		

Volumes

Name												
Base Volume Input [veh/h]	111	14	7	41	112	64	8	239	388	580	465	44
Base Volume Adjustment Factor	1.0000	1.0000	1.0000	1.0000	1.0000	1.0000	1.0000	1.0000	1.0000	1.0000	1.0000	1.0000
Heavy Vehicles Percentage [%]	2.00	2.00	2.00	2.00	2.00	2.00	2.00	2.00	2.00	2.00	2.00	2.00
Growth Rate	1.02	1.02	1.02	1.02	1.02	1.02	1.02	1.02	1.02	1.02	1.02	1.02
In-Process Volume [veh/h]	0	0	0	0	0	0	0	0	0	0	0	0
Site-Generated Trips [veh/h]	59	0	0	0	0	0	0	0	0	0	0	0
Diverted Trips [veh/h]	0	0	0	0	0	0	0	0	0	0	0	0
Pass-by Trips [veh/h]	0	0	0	0	0	0	0	0	0	0	0	0
Existing Site Adjustment Volume [veh/h]	0	0	0	0	0	0	0	0	0	0	0	0
Other Volume [veh/h]	0	0	0	0	0	0	0	0	0	0	0	0
Total Hourly Volume [veh/h]	172	14	7	42	114	65	8	244	396	592	474	45
Peak Hour Factor	0.9350	0.9350	0.9350	0.9350	0.9350	0.9350	0.9350	0.9350	0.9350	0.9350	0.9350	0.9350
Other Adjustment Factor	1.0000	1.0000	1.0000	1.0000	1.0000	1.0000	1.0000	1.0000	1.0000	1.0000	1.0000	1.0000
Total 15-Minute Volume [veh/h]	46	4	2	11	30	17	2	65	106	158	127	12
Total Analysis Volume [veh/h]	184	15	7	45	122	70	9	261	424	633	507	48
Pedestrian Volume [ped/h]	0			0			0			0		
Bicycle Volume [bicycles/h]	0			0			0			0		

Intersection Settings

Cycle Length [s]	100
Lost time [s]	10.00

Phasing & Timing

Control Type	Permiss	Permiss	Permiss	Permiss	Permiss	Permiss	Protecte	Permiss	Permiss	Protecte	Permiss	Permiss
Signal group	0	2	0	0	6	0	3	8	0	7	4	0
Auxiliary Signal Groups												
Lead / Lag	-	-	-	-	-	-	Lead	-	-	Lead	-	-

Movement, Approach, & Intersection Results

V/C, Movement V/C Ratio	0.12	0.01	0.01	0.03	0.08	0.04	0.01	0.08	0.27	0.20	0.32	0.03
Intersection LOS	C											
Intersection V/C	0.754											

Vincent Avenue Industrial Building

Vistro File: G:\...\PMC.vistro
Report File: G:\...\FBP PM IMP.pdf

Scenario 5 Future Baseline With Project With Improvements
5/6/2020

Intersection Analysis Summary

ID	Intersection Name	Control Type	Method	Worst Mvmt	V/C	Delay (s/veh)	LOS
2	I-605 NB Ramps (NS) at Live Oak Avenue (EW)	Signalized	ICU 1	WB Thru	0.792	-	C
7	Arrow Highway (NS) at Live Oak Ave/Arrow Hwy (EW)	Signalized	ICU 1	SB Left	0.761	-	C
9	Santa Fe Dam/Azusa Canyon Road (NS) at Arrow Highway (EW)	Signalized	ICU 1	EB Thru	0.792	-	C
17	Vincent Avenue (NS) at Gladstone Street (EW)	Signalized	ICU 1	EB Right	0.740	-	C
34	Alameda Ave/I-210 WB Ramps (NS) at 1st St (EW)	Signalized	ICU 1	NB Left	0.644	-	B

V/C, Delay, LOS: For two-way stop, these values are taken from the movement with the worst (highest) delay value. For all other control types, they are taken for the whole intersection.

Intersection Level Of Service Report
Intersection 2: I-605 NB Ramps (NS) at Live Oak Avenue (EW)

Control Type:	Signalized	Delay (sec / veh):	-
Analysis Method:	ICU 1	Level Of Service:	C
Analysis Period:	15 minutes	Volume to Capacity (v/c):	0.792

Intersection Setup

Name	I-605 NB Ramps			I-605 NB Ramps			Live Oak Avenue			Live Oak Avenue		
Approach	Northbound			Southbound			Eastbound			Westbound		
Lane Configuration												
Turning Movement	Left	Thru	Right	Left	Thru	Right	Left	Thru	Right	Left	Thru	Right
Lane Width [ft]	12.00	12.00	12.00	12.00	12.00	12.00	12.00	12.00	12.00	12.00	12.00	12.00
No. of Lanes in Pocket	0	0	0	0	0	0	0	0	0	0	0	0
Pocket Length [ft]	100.00	100.00	100.00	100.00	100.00	100.00	100.00	100.00	100.00	100.00	100.00	100.00
Speed [mph]	35.00			35.00			45.00			45.00		
Grade [%]	0.00			0.00			0.00			0.00		
Crosswalk	Yes			Yes			No			No		

Volumes

Name	I-605 NB Ramps			I-605 NB Ramps			Live Oak Avenue			Live Oak Avenue		
Base Volume Input [veh/h]	0	0	621	0	0	523	0	1012	0	0	944	0
Base Volume Adjustment Factor	1.0000	1.0000	1.0000	1.0000	1.0000	1.0000	1.0000	1.0000	1.0000	1.0000	1.0000	1.0000
Heavy Vehicles Percentage [%]	2.00	2.00	2.00	2.00	2.00	2.00	2.00	2.00	2.00	2.00	2.00	2.00
Growth Rate	1.00	1.00	1.01	1.00	1.00	1.01	1.00	1.01	1.00	1.00	1.01	1.00
In-Process Volume [veh/h]	0	0	0	0	0	0	0	0	0	0	0	0
Site-Generated Trips [veh/h]	0	0	14	0	0	0	0	0	0	0	93	0
Diverted Trips [veh/h]	0	0	0	0	0	0	0	0	0	0	0	0
Pass-by Trips [veh/h]	0	0	0	0	0	0	0	0	0	0	0	0
Existing Site Adjustment Volume [veh/h]	0	0	0	0	0	0	0	0	0	0	0	0
Other Volume [veh/h]	0	0	0	0	0	0	0	0	0	0	0	0
Total Hourly Volume [veh/h]	0	0	641	0	0	528	0	1022	0	0	1046	0
Peak Hour Factor	1.0000	1.0000	1.0000	1.0000	1.0000	1.0000	1.0000	1.0000	1.0000	1.0000	1.0000	1.0000
Other Adjustment Factor	1.0000	1.0000	1.0000	1.0000	1.0000	1.0000	1.0000	1.0000	1.0000	1.0000	1.0000	1.0000
Total 15-Minute Volume [veh/h]	0	0	160	0	0	132	0	256	0	0	262	0
Total Analysis Volume [veh/h]	0	0	641	0	0	528	0	1022	0	0	1046	0
Pedestrian Volume [ped/h]	0			0			0			0		
Bicycle Volume [bicycles/h]	0			0			0			0		

Intersection Settings

Cycle Length [s]	100
Lost time [s]	10.00

Phasing & Timing

Control Type	Permiss	Permiss	Permiss	Permiss	Permiss	Permiss	Permiss	Permiss	Permiss	Permiss	Permiss	Permiss
Signal group	0	0	2	0	0	6	0	8	0	0	4	0
Auxiliary Signal Groups												
Lead / Lag	-	-	-	-	-	-	-	-	-	-	-	-

Movement, Approach, & Intersection Results

V/C, Movement V/C Ratio	0.00	0.00	0.20	0.00	0.00	0.17	0.00	0.32	0.00	0.00	0.33	0.00
Intersection LOS	C											
Intersection V/C	0.792											

Intersection Level Of Service Report
Intersection 7: Arrow Highway (NS) at Live Oak Ave/Arrow Hwy (EW)

Control Type:	Signalized	Delay (sec / veh):	-
Analysis Method:	ICU 1	Level Of Service:	C
Analysis Period:	15 minutes	Volume to Capacity (v/c):	0.761

Intersection Setup

Name			Live Oak Avenue		Arrow Highway	
Approach	Southbound		Eastbound		Westbound	
Lane Configuration						
Turning Movement	Left	Right	Left	Thru	Thru	Right
Lane Width [ft]	12.00	12.00	12.00	12.00	12.00	12.00
No. of Lanes in Pocket	0	0	1	0	0	0
Pocket Length [ft]	100.00	100.00	160.00	100.00	100.00	100.00
Speed [mph]	35.00		45.00		45.00	
Grade [%]	0.00		0.00		0.00	
Crosswalk	No		Yes		No	

Volumes

Name			Live Oak Avenue		Arrow Highway	
Base Volume Input [veh/h]	1077	131	41	1326	1117	451
Base Volume Adjustment Factor	1.0000	1.0000	1.0000	1.0000	1.0000	1.0000
Heavy Vehicles Percentage [%]	2.00	2.00	2.00	2.00	2.00	2.00
Growth Rate	1.01	1.01	1.01	1.01	1.01	1.00
In-Process Volume [veh/h]	0	0	0	0	0	0
Site-Generated Trips [veh/h]	2	0	0	15	100	12
Diverted Trips [veh/h]	0	0	0	0	0	0
Pass-by Trips [veh/h]	0	0	0	0	0	0
Existing Site Adjustment Volume [veh/h]	0	0	0	0	0	0
Other Volume [veh/h]	0	0	0	0	0	0
Total Hourly Volume [veh/h]	1090	132	41	1354	1228	463
Peak Hour Factor	1.0000	1.0000	1.0000	1.0000	1.0000	1.0000
Other Adjustment Factor	1.0000	1.0000	1.0000	1.0000	1.0000	1.0000
Total 15-Minute Volume [veh/h]	273	33	10	339	307	116
Total Analysis Volume [veh/h]	1090	132	41	1354	1228	463
Pedestrian Volume [ped/h]	0		0		0	
Bicycle Volume [bicycles/h]	0		0		0	

Intersection Settings

Cycle Length [s]	100
Lost time [s]	10.00

Phasing & Timing

Control Type	Permissive	Permissive	Permissive	Permissive	Permissive	Unsignalized
Signal group	1	0	0	8	4	0
Auxiliary Signal Groups						
Lead / Lag	Lead	-	-	-	-	-

Movement, Approach, & Intersection Results

V/C, Movement V/C Ratio	0.34	0.08	0.03	0.28	0.26	0.00
Intersection LOS	C					
Intersection V/C	0.761					

Intersection Level Of Service Report

Intersection 9: Santa Fe Dam/Azusa Canyon Road (NS) at Arrow Highway (EW)

Control Type:	Signalized	Delay (sec / veh):	-
Analysis Method:	ICU 1	Level Of Service:	C
Analysis Period:	15 minutes	Volume to Capacity (v/c):	0.792

Intersection Setup

Name	Azusa Canyon Road						Arrow Highway			Arrow Highway		
Approach	Northbound			Southbound			Eastbound			Westbound		
Lane Configuration												
Turning Movement	Left	Thru	Right	Left	Thru	Right	Left	Thru	Right	Left	Thru	Right
Lane Width [ft]	12.00	12.00	12.00	12.00	12.00	12.00	12.00	12.00	12.00	12.00	12.00	12.00
No. of Lanes in Pocket	1	0	0	0	0	0	1	0	0	1	0	0
Pocket Length [ft]	200.00	100.00	100.00	100.00	100.00	100.00	185.00	100.00	100.00	180.00	100.00	100.00
Speed [mph]	35.00			35.00			45.00			45.00		
Grade [%]	0.00			0.00			0.00			0.00		
Crosswalk	Yes			Yes			No			Yes		

Volumes

Name	Azusa Canyon Road						Arrow Highway			Arrow Highway		
Base Volume Input [veh/h]	120	5	442	15	13	29	14	1265	59	158	967	16
Base Volume Adjustment Factor	1.0000	1.0000	1.0000	1.0000	1.0000	1.0000	1.0000	1.0000	1.0000	1.0000	1.0000	1.0000
Heavy Vehicles Percentage [%]	2.00	2.00	2.00	2.00	2.00	2.00	2.00	2.00	2.00	2.00	2.00	2.00
Growth Rate	1.01	1.00	1.01	1.00	1.00	1.00	1.00	1.01	1.01	1.01	1.01	1.00
In-Process Volume [veh/h]	0	0	0	0	0	0	0	0	0	0	0	0
Site-Generated Trips [veh/h]	0	0	1	0	0	0	0	17	0	7	112	0
Diverted Trips [veh/h]	0	0	0	0	0	0	0	0	0	0	0	0
Pass-by Trips [veh/h]	0	0	0	0	0	0	0	0	0	0	0	0
Existing Site Adjustment Volume [veh/h]	0	0	0	0	0	0	0	0	0	0	0	0
Other Volume [veh/h]	0	0	0	0	0	0	0	0	0	0	0	0
Total Hourly Volume [veh/h]	121	5	447	15	13	29	14	1295	60	167	1089	16
Peak Hour Factor	1.0000	1.0000	1.0000	1.0000	1.0000	1.0000	1.0000	1.0000	1.0000	1.0000	1.0000	1.0000
Other Adjustment Factor	1.0000	1.0000	1.0000	1.0000	1.0000	1.0000	1.0000	1.0000	1.0000	1.0000	1.0000	1.0000
Total 15-Minute Volume [veh/h]	30	1	112	4	3	7	4	324	15	42	272	4
Total Analysis Volume [veh/h]	121	5	447	15	13	29	14	1295	60	167	1089	16
Pedestrian Volume [ped/h]	0			0			0			0		
Bicycle Volume [bicycles/h]	0			0			0			0		

Intersection Settings

Cycle Length [s]	100
Lost time [s]	10.00

Phasing & Timing

Control Type	Split	Split	Split	Split	Split	Split	Protecte	Permiss	Permiss	Protecte	Permiss	Permiss
Signal group	0	2	0	0	6	0	3	8	0	7	4	0
Auxiliary Signal Groups												
Lead / Lag	-	-	-	-	-	-	Lead	-	-	Lead	-	-

Movement, Approach, & Intersection Results

V/C, Movement V/C Ratio	0.08	0.00	0.28	0.01	0.03	0.03	0.01	0.28	0.28	0.10	0.23	0.23
Intersection LOS	C											
Intersection V/C	0.792											

Intersection Level Of Service Report

Intersection 17: Vincent Avenue (NS) at Gladstone Street (EW)

Control Type:	Signalized	Delay (sec / veh):	-
Analysis Method:	ICU 1	Level Of Service:	C
Analysis Period:	15 minutes	Volume to Capacity (v/c):	0.740

Intersection Setup

Name	Vincent Avenue			Vincent Avenue			Gladstone Street			Gladstone Street		
Approach	Northbound			Southbound			Eastbound			Westbound		
Lane Configuration												
Turning Movement	Left	Thru	Right	Left	Thru	Right	Left	Thru	Right	Left	Thru	Right
Lane Width [ft]	12.00	12.00	12.00	12.00	12.00	12.00	12.00	12.00	12.00	12.00	12.00	12.00
No. of Lanes in Pocket	1	0	0	0	0	0	2	0	0	1	0	0
Pocket Length [ft]	195.00	100.00	100.00	100.00	100.00	100.00	230.00	100.00	100.00	175.00	100.00	100.00
Speed [mph]	45.00			25.00			45.00			45.00		
Grade [%]	0.00			0.00			0.00			0.00		
Crosswalk	Yes			Yes			No			Yes		

Volumes

Name	Vincent Avenue			Vincent Avenue			Gladstone Street			Gladstone Street		
Base Volume Input [veh/h]	113	24	475	16	25	18	14	862	160	150	203	3
Base Volume Adjustment Factor	1.0000	1.0000	1.0000	1.0000	1.0000	1.0000	1.0000	1.0000	1.0000	1.0000	1.0000	1.0000
Heavy Vehicles Percentage [%]	2.00	2.00	2.00	2.00	2.00	2.00	2.00	2.00	2.00	2.00	2.00	2.00
Growth Rate	1.01	1.01	1.01	1.01	1.01	1.01	1.01	1.01	1.01	1.01	1.01	1.01
In-Process Volume [veh/h]	0	0	0	0	0	0	0	0	0	0	0	0
Site-Generated Trips [veh/h]	56	0	90	0	0	0	0	0	8	14	0	0
Diverted Trips [veh/h]	0	0	0	0	0	0	0	0	0	0	0	0
Pass-by Trips [veh/h]	0	0	0	0	0	0	0	0	0	0	0	0
Existing Site Adjustment Volume [veh/h]	0	0	0	0	0	0	0	0	0	0	0	0
Other Volume [veh/h]	0	0	0	0	0	0	0	0	0	0	0	0
Total Hourly Volume [veh/h]	170	24	570	16	25	18	14	871	170	166	205	3
Peak Hour Factor	1.0000	1.0000	1.0000	1.0000	1.0000	1.0000	1.0000	1.0000	1.0000	1.0000	1.0000	1.0000
Other Adjustment Factor	1.0000	1.0000	1.0000	1.0000	1.0000	1.0000	1.0000	1.0000	1.0000	1.0000	1.0000	1.0000
Total 15-Minute Volume [veh/h]	43	6	143	4	6	5	4	218	43	42	51	1
Total Analysis Volume [veh/h]	170	24	570	16	25	18	14	871	170	166	205	3
Pedestrian Volume [ped/h]	0			0			0			0		
Bicycle Volume [bicycles/h]	0			0			0			0		

Intersection Settings

Cycle Length [s]	100
Lost time [s]	10.00

Phasing & Timing

Control Type	Split	Split	Split	Split	Split	Split	Protecte	Permiss	Permiss	Protecte	Permiss	Permiss
Signal group	0	2	0	0	6	0	3	8	0	7	4	0
Auxiliary Signal Groups												
Lead / Lag	-	-	-	-	-	-	Lead	-	-	Lead	-	-

Movement, Approach, & Intersection Results

V/C, Movement V/C Ratio	0.05	0.16	0.16	0.01	0.03	0.03	0.00	0.33	0.33	0.10	0.07	0.07
Intersection LOS	C											
Intersection V/C	0.740											

Intersection Level Of Service Report

Intersection 34: Alameda Ave/I-210 WB Ramps (NS) at 1st St (EW)

Control Type:	Signalized	Delay (sec / veh):	-
Analysis Method:	ICU 1	Level Of Service:	B
Analysis Period:	15 minutes	Volume to Capacity (v/c):	0.644

Intersection Setup

Name											
Approach	Northbound			Southbound			Eastbound			Westbound		
Lane Configuration												
Turning Movement	Left	Thru	Right	Left	Thru	Right	Left	Thru	Right	Left	Thru	Right
Lane Width [ft]	12.00	12.00	12.00	12.00	12.00	12.00	12.00	12.00	12.00	12.00	12.00	12.00
No. of Lanes in Pocket	1	0	0	1	0	1	1	0	1	1	0	1
Pocket Length [ft]	325.00	100.00	100.00	50.00	100.00	150.00	55.00	100.00	100.00	100.00	100.00	110.00
Speed [mph]	35.00			35.00			35.00			35.00		
Grade [%]	0.00			0.00			0.00			0.00		
Crosswalk	Yes			Yes			Yes			Yes		

Volumes

Name												
Base Volume Input [veh/h]	366	87	94	46	24	38	20	604	207	177	305	43
Base Volume Adjustment Factor	1.0000	1.0000	1.0000	1.0000	1.0000	1.0000	1.0000	1.0000	1.0000	1.0000	1.0000	1.0000
Heavy Vehicles Percentage [%]	2.00	2.00	2.00	2.00	2.00	2.00	2.00	2.00	2.00	2.00	2.00	2.00
Growth Rate	1.02	1.02	1.02	1.02	1.02	1.02	1.02	1.02	1.02	1.02	1.02	1.02
In-Process Volume [veh/h]	0	0	0	0	0	0	0	0	0	0	0	0
Site-Generated Trips [veh/h]	8	0	0	0	0	0	0	0	0	0	0	0
Diverted Trips [veh/h]	0	0	0	0	0	0	0	0	0	0	0	0
Pass-by Trips [veh/h]	0	0	0	0	0	0	0	0	0	0	0	0
Existing Site Adjustment Volume [veh/h]	0	0	0	0	0	0	0	0	0	0	0	0
Other Volume [veh/h]	0	0	0	0	0	0	0	0	0	0	0	0
Total Hourly Volume [veh/h]	381	89	96	47	24	39	20	616	211	181	311	44
Peak Hour Factor	0.9400	0.9400	0.9400	0.9400	0.9400	0.9400	0.9400	0.9400	0.9400	0.9400	0.9400	0.9400
Other Adjustment Factor	1.0000	1.0000	1.0000	1.0000	1.0000	1.0000	1.0000	1.0000	1.0000	1.0000	1.0000	1.0000
Total 15-Minute Volume [veh/h]	101	24	26	13	6	10	5	164	56	48	83	12
Total Analysis Volume [veh/h]	405	95	102	50	26	41	21	655	224	193	331	47
Pedestrian Volume [ped/h]	0			0			0			0		
Bicycle Volume [bicycles/h]	0			0			0			0		

Intersection Settings

Cycle Length [s]	100
Lost time [s]	10.00

Phasing & Timing

Control Type	Permiss	Permiss	Permiss	Permiss	Permiss	Permiss	Protecte	Permiss	Permiss	Protecte	Permiss	Permiss
Signal group	0	2	0	0	6	0	3	8	0	7	4	0
Auxiliary Signal Groups												
Lead / Lag	-	-	-	-	-	-	Lead	-	-	Lead	-	-

Movement, Approach, & Intersection Results

V/C, Movement V/C Ratio	0.25	0.12	0.12	0.03	0.02	0.03	0.01	0.20	0.14	0.06	0.21	0.03
Intersection LOS	B											
Intersection V/C	0.644											

FUTURE BASELINE PLUS CUMULATIVE PROJECTS WITHOUT PROJECT

Vincent Avenue Industrial Building

Vistro File: G:\...\AMC.vistro
Report File: G:\...\FBC AM.pdf

Scenario 3 Future Baseline Plus Cumulative Without Project
5/6/2020

Intersection Analysis Summary

ID	Intersection Name	Control Type	Method	Worst Mvmt	V/C	Delay (s/veh)	LOS
1	I-605 SB On Ramp (NS) at Live Oak Avenue (EW)	Signalized	ICU 1	WB Thru	0.660	-	B
2	I-605 NB Ramps (NS) at Live Oak Avenue (EW)	Two-way stop	HCM 6th Edition	SB Right	2.646	772.3	F
3	Graham Road (NS) at Live Oak Avenue (EW)	Signalized	ICU 1	WB Thru	0.665	-	B
4	Rivergrade Road (NS) at Live Oak Avenue (EW)	Signalized	ICU 1	WB Thru	0.679	-	B
5	Stewart Avenue (NS) at Live Oak Avenue (EW)	Signalized	ICU 1	WB Thru	0.844	-	D
6	Baldwin Park Boulevard (NS) at Live Oak Avenue (EW)	Signalized	ICU 1	WB Thru	0.596	-	A
7	Arrow Highway (NS) at Live Oak Ave/Arrow Hwy (EW)	Signalized	ICU 1	WB Thru	0.675	-	B
8	Maine Avenue (NS) at Arrow Highway (EW)	Signalized	ICU 1	WB Thru	0.821	-	D
9	Santa Fe Dam/Azusa Canyon Road (NS) at Arrow Highway (EW)	Signalized	ICU 1	WB Thru	0.963	-	E
10	4th Street (NS) at Arrow Highway (EW)	Signalized	ICU 1	EB Thru	0.371	-	A
11	Irwindale Avenue (NS) at I-210 WB Ramps (EW)	Signalized	ICU 1	SB Thru	0.595	-	A
12	Irwindale Avenue (NS) at I-210 EB Ramps (EW)	Signalized	ICU 1	EB Right	0.798	-	C
13	Irwindale Avenue (NS) at Jardin De Roca/Irwindale Rd (EW)	Signalized	ICU 1	SB Thru	0.663	-	B
14	Irwindale Avenue (NS) at 1st Street (EW)	Signalized	ICU 1	NB Right	0.528	-	A
15	Irwindale Avenue (NS) at Gladstone Street (EW)	Signalized	ICU 1	WB Left	0.686	-	B
16	Irwindale Avenue (NS) at Arrow Highway (EW)	Signalized	ICU 1	WB Right	0.885	-	D
17	Vincent Avenue (NS) at	Signalized	ICU 1	WB Thru	0.531		A

17	Gladstone Street (EW)	Signalized	ICU 1	WB Thru	0.551	-	A
18	Vincent Avenue (NS) at Arrow Highway (EW)	Signalized	ICU 1	WB Thru	0.774	-	C
21	Vincent Avenue (NS) at Cypress Street (EW)	Signalized	ICU 1	WB Thru	0.653	-	B
22	Vincent Avenue (NS) at San Bernardino Road (EW)	Signalized	ICU 1	WB Thru	0.660	-	B
23	Vincent Avenue (NS) at Badillo Street (EW)	Signalized	ICU 1	WB Thru	0.616	-	B
24	Vincent Avenue (NS) at Puente Avenue (EW)	Signalized	ICU 1	NB Thru	0.591	-	A
25	Vincent Avenue (NS) at Rowland Avenue (EW)	Signalized	ICU 1	SB Thru	0.543	-	A
26	Vincent Avenue (NS) at Workman Avenue (EW)	Signalized	ICU 1	SB Thru	0.616	-	B
27	Vincent Avenue (NS) at I-10 WB Ramps (EW)	Signalized	ICU 1	SB Thru	0.446	-	A
28	Vincent Avenue (NS) at I-10 EB Ramps (EW)	Signalized	ICU 1	NB Right	0.493	-	A
29	Vernon Ave/Lark Ellen Ave (NS) at Gladstone Street (EW)	Signalized	ICU 1	WB Thru	0.698	-	B
30	Azusa Avenue (NS) at I-210 EB Ramps (EW)	Signalized	ICU 1	NB Thru	0.686	-	B
31	Azusa Avenue (NS) at Paramount Street (EW)	Signalized	ICU 1	NB Thru	0.629	-	B
32	Azusa Avenue (NS) at Gladstone Street (EW)	Signalized	ICU 1	WB Thru	0.758	-	C
33	San Gabriel Ave/Azusa Ave (NS) at 1st St (EW)	Signalized	ICU 1	SB Thru	0.704	-	C
34	Alameda Ave/I-210 WB Ramps NS) at 1st St (EW)	Signalized	ICU 1	WB Left	0.962	-	E

V/C, Delay, LOS: For two-way stop, these values are taken from the movement with the worst (highest) delay value. For all other control types, they are taken for the whole intersection.

Intersection Level Of Service Report
Intersection 1: I-605 SB On Ramp (NS) at Live Oak Avenue (EW)

Control Type:	Signalized	Delay (sec / veh):	-
Analysis Method:	ICU 1	Level Of Service:	B
Analysis Period:	15 minutes	Volume to Capacity (v/c):	0.660

Intersection Setup

Name	I-605 SB On Ramps				Live Oak Avenue	
Approach	Northbound		Eastbound		Westbound	
Lane Configuration						
Turning Movement	Left	Right	Thru	Right	Left	Thru
Lane Width [ft]	12.00	12.00	12.00	12.00	12.00	12.00
No. of Lanes in Pocket	0	0	0	0	1	0
Pocket Length [ft]	100.00	100.00	100.00	100.00	365.00	100.00
Speed [mph]	35.00		35.00		45.00	
Grade [%]	0.00		0.00		0.00	
Crosswalk	Yes		No		No	

Volumes

Name	I-605 SB On Ramps				Live Oak Avenue	
Base Volume Input [veh/h]	0	0	280	347	521	1094
Base Volume Adjustment Factor	1.0000	1.0000	1.0000	0.0000	1.0000	1.0000
Heavy Vehicles Percentage [%]	2.00	2.00	2.00	2.00	2.00	2.00
Growth Rate	1.00	1.00	1.01	1.01	1.01	1.01
In-Process Volume [veh/h]	0	0	0	0	0	0
Site-Generated Trips [veh/h]	0	0	92	138	182	608
Diverted Trips [veh/h]	0	0	0	0	0	0
Pass-by Trips [veh/h]	0	0	0	0	0	0
Existing Site Adjustment Volume [veh/h]	0	0	0	0	0	0
Other Volume [veh/h]	0	0	0	0	0	0
Total Hourly Volume [veh/h]	0	0	375	138	708	1713
Peak Hour Factor	1.0000	1.0000	1.0000	1.0000	1.0000	1.0000
Other Adjustment Factor	1.0000	1.0000	1.0000	0.0000	1.0000	1.0000
Total 15-Minute Volume [veh/h]	0	0	94	0	177	428
Total Analysis Volume [veh/h]	0	0	375	0	708	1713
Pedestrian Volume [ped/h]	0		0		0	
Bicycle Volume [bicycles/h]	0		0		0	

Intersection Settings

Cycle Length [s]	100
Lost time [s]	10.00

Phasing & Timing

Control Type	Permissive	Permissive	Permissive	Permissive	Protected	Permissive
Signal group	0	0	2	0	1	6
Auxiliary Signal Groups						
Lead / Lag	-	-	-	-	Lead	-

Movement, Approach, & Intersection Results

V/C, Movement V/C Ratio	0.00	0.00	0.12	0.00	0.44	0.54
Intersection LOS	B					
Intersection V/C	0.660					

Intersection Level Of Service Report
Intersection 2: I-605 NB Ramps (NS) at Live Oak Avenue (EW)

Control Type:	Two-way stop	Delay (sec / veh):	772.3
Analysis Method:	HCM 6th Edition	Level Of Service:	F
Analysis Period:	15 minutes	Volume to Capacity (v/c):	2.646

Intersection Setup

Name	I-605 NB Ramps			I-605 NB Ramps			Live Oak Avenue			Live Oak Avenue		
Approach	Northbound			Southbound			Eastbound			Westbound		
Lane Configuration												
Turning Movement	Left	Thru	Right	Left	Thru	Right	Left	Thru	Right	Left	Thru	Right
Lane Width [ft]	12.00	12.00	12.00	12.00	12.00	12.00	12.00	12.00	12.00	12.00	12.00	12.00
No. of Lanes in Pocket	0	0	0	0	0	0	0	0	0	0	0	0
Pocket Length [ft]	100.00	100.00	100.00	100.00	100.00	100.00	100.00	100.00	100.00	100.00	100.00	100.00
Speed [mph]	35.00			35.00			45.00			45.00		
Grade [%]	0.00			0.00			0.00			0.00		
Crosswalk	Yes			Yes			No			No		

Volumes

Name	I-605 NB Ramps			I-605 NB Ramps			Live Oak Avenue			Live Oak Avenue		
Base Volume Input [veh/h]	0	0	469	0	0	432	0	262	0	0	1205	0
Base Volume Adjustment Factor	1.0000	1.0000	1.0000	1.0000	1.0000	1.0000	1.0000	1.0000	1.0000	1.0000	1.0000	1.0000
Heavy Vehicles Percentage [%]	2.00	2.00	2.00	2.00	2.00	2.00	2.00	2.00	2.00	2.00	2.00	2.00
Growth Rate	1.00	1.00	1.01	1.00	1.00	1.01	1.00	1.01	1.00	1.00	1.01	1.00
In-Process Volume [veh/h]	0	0	0	0	0	0	0	0	0	0	0	0
Site-Generated Trips [veh/h]	0	0	258	0	0	484	0	92	0	0	306	0
Diverted Trips [veh/h]	0	0	0	0	0	0	0	0	0	0	0	0
Pass-by Trips [veh/h]	0	0	0	0	0	0	0	0	0	0	0	0
Existing Site Adjustment Volume [veh/h]	0	0	0	0	0	0	0	0	0	0	0	0
Other Volume [veh/h]	0	0	0	0	0	0	0	0	0	0	0	0
Total Hourly Volume [veh/h]	0	0	732	0	0	920	0	357	0	0	1523	0
Peak Hour Factor	1.0000	1.0000	1.0000	1.0000	1.0000	1.0000	1.0000	1.0000	1.0000	1.0000	1.0000	1.0000
Other Adjustment Factor	1.0000	1.0000	1.0000	1.0000	1.0000	1.0000	1.0000	1.0000	1.0000	1.0000	1.0000	1.0000
Total 15-Minute Volume [veh/h]	0	0	183	0	0	230	0	89	0	0	381	0
Total Analysis Volume [veh/h]	0	0	732	0	0	920	0	357	0	0	1523	0
Pedestrian Volume [ped/h]	0			0			0			0		

Intersection Settings

Priority Scheme	Stop	Stop	Free	Free
Flared Lane				
Storage Area [veh]	0	0	0	0
Two-Stage Gap Acceptance	No	No		
Number of Storage Spaces in Median	0	0	0	0

Movement, Approach, & Intersection Results

V/C, Movement V/C Ratio	0.00	0.00	0.88	0.00	0.00	2.65	0.00	0.00	0.00	0.00	0.02	0.00
d_M, Delay for Movement [s/veh]	0.00	0.00	31.47	0.00	0.00	772.26	0.00	0.00	0.00	0.00	0.00	0.00
Movement LOS			D			F		A			A	
95th-Percentile Queue Length [veh/ln]	0.00	0.00	11.39	0.00	0.00	76.07	0.00	0.00	0.00	0.00	0.00	0.00
95th-Percentile Queue Length [ft/ln]	0.00	0.00	284.80	0.00	0.00	1901.76	0.00	0.00	0.00	0.00	0.00	0.00
d_A, Approach Delay [s/veh]	31.47			772.26			0.00			0.00		
Approach LOS	D			F			A			A		
d_I, Intersection Delay [s/veh]	207.68											
Intersection LOS	F											

Intersection Level Of Service Report
Intersection 3: Graham Road (NS) at Live Oak Avenue (EW)

Control Type:	Signalized	Delay (sec / veh):	-
Analysis Method:	ICU 1	Level Of Service:	B
Analysis Period:	15 minutes	Volume to Capacity (v/c):	0.665

Intersection Setup

Name	Graham Road		Live Oak Avenue		Live Oak Avenue	
Approach	Northbound		Eastbound		Westbound	
Lane Configuration						
Turning Movement	Left	Right	Thru	Right	Left	Thru
Lane Width [ft]	12.00	12.00	12.00	12.00	12.00	12.00
No. of Lanes in Pocket	0	0	0	0	1	0
Pocket Length [ft]	100.00	100.00	100.00	100.00	205.00	100.00
Speed [mph]	35.00		45.00		45.00	
Grade [%]	0.00		0.00		0.00	
Crosswalk	Yes		No		Yes	

Volumes

Name	Graham Road		Live Oak Avenue		Live Oak Avenue	
Base Volume Input [veh/h]	38	39	578	28	14	1334
Base Volume Adjustment Factor	1.0000	1.0000	1.0000	1.0000	1.0000	1.0000
Heavy Vehicles Percentage [%]	2.00	2.00	2.00	2.00	2.00	2.00
Growth Rate	1.01	1.01	1.01	1.01	1.01	1.01
In-Process Volume [veh/h]	0	0	0	0	0	0
Site-Generated Trips [veh/h]	0	0	350	0	0	306
Diverted Trips [veh/h]	0	0	0	0	0	0
Pass-by Trips [veh/h]	0	0	0	0	0	0
Existing Site Adjustment Volume [veh/h]	0	0	0	0	0	0
Other Volume [veh/h]	0	0	0	0	0	0
Total Hourly Volume [veh/h]	38	39	934	28	14	1653
Peak Hour Factor	1.0000	1.0000	1.0000	1.0000	1.0000	1.0000
Other Adjustment Factor	1.0000	1.0000	1.0000	1.0000	1.0000	1.0000
Total 15-Minute Volume [veh/h]	10	10	234	7	4	413
Total Analysis Volume [veh/h]	38	39	934	28	14	1653
Pedestrian Volume [ped/h]	0		0		0	
Bicycle Volume [bicycles/h]	0		0		0	

Intersection Settings

Cycle Length [s]	100
Lost time [s]	10.00

Phasing & Timing

Control Type	Permissive	Permissive	Permissive	Permissive	Protected	Permissive
Signal group	5	0	8	0	7	4
Auxiliary Signal Groups						
Lead / Lag	Lead	-	-	-	Lead	-

Movement, Approach, & Intersection Results

V/C, Movement V/C Ratio	0.02	0.05	0.29	0.02	0.01	0.52
Intersection LOS	B					
Intersection V/C	0.665					

Intersection Level Of Service Report
Intersection 4: Rivergrade Road (NS) at Live Oak Avenue (EW)

Control Type:	Signalized	Delay (sec / veh):	-
Analysis Method:	ICU 1	Level Of Service:	B
Analysis Period:	15 minutes	Volume to Capacity (v/c):	0.679

Intersection Setup

Name	Rivergrade Raod			Rivergrade Road			Live Oak Avenue			Live Oak Avenue		
Approach	Northbound			Southbound			Eastbound			Westbound		
Lane Configuration												
Turning Movement	Left	Thru	Right	Left	Thru	Right	Left	Thru	Right	Left	Thru	Right
Lane Width [ft]	12.00	12.00	12.00	12.00	12.00	12.00	12.00	12.00	12.00	12.00	12.00	12.00
No. of Lanes in Pocket	1	0	0	1	0	1	1	0	0	1	0	1
Pocket Length [ft]	315.00	100.00	100.00	160.00	100.00	145.00	205.00	100.00	100.00	155.00	100.00	120.00
Speed [mph]	50.00			40.00			45.00			45.00		
Grade [%]	0.00			0.00			0.00			0.00		
Crosswalk	Yes			Yes			Yes			Yes		

Volumes

Name	Rivergrade Raod			Rivergrade Road			Live Oak Avenue			Live Oak Avenue		
Base Volume Input [veh/h]	52	67	138	24	311	58	71	587	77	268	983	22
Base Volume Adjustment Factor	1.0000	1.0000	1.0000	1.0000	1.0000	1.0000	1.0000	1.0000	1.0000	1.0000	1.0000	1.0000
Heavy Vehicles Percentage [%]	2.00	2.00	2.00	2.00	2.00	2.00	2.00	2.00	2.00	2.00	2.00	2.00
Growth Rate	1.01	1.01	1.01	1.01	1.01	1.01	1.01	1.01	1.01	1.01	1.01	1.01
In-Process Volume [veh/h]	0	0	0	0	0	0	0	0	0	0	0	0
Site-Generated Trips [veh/h]	0	2	5	0	2	105	94	141	0	2	93	0
Diverted Trips [veh/h]	0	0	0	0	0	0	0	0	0	0	0	0
Pass-by Trips [veh/h]	0	0	0	0	0	0	0	0	0	0	0	0
Existing Site Adjustment Volume [veh/h]	0	0	0	0	0	0	0	0	0	0	0	0
Other Volume [veh/h]	0	0	0	0	0	0	0	0	0	0	0	0
Total Hourly Volume [veh/h]	53	70	144	24	316	164	166	734	78	273	1086	22
Peak Hour Factor	1.0000	1.0000	1.0000	1.0000	1.0000	1.0000	1.0000	1.0000	1.0000	1.0000	1.0000	1.0000
Other Adjustment Factor	1.0000	1.0000	1.0000	1.0000	1.0000	1.0000	1.0000	1.0000	1.0000	1.0000	1.0000	1.0000
Total 15-Minute Volume [veh/h]	13	18	36	6	79	41	42	184	20	68	272	6
Total Analysis Volume [veh/h]	53	70	144	24	316	164	166	734	78	273	1086	22
Pedestrian Volume [ped/h]	0			0			0			0		
Bicycle Volume [bicycles/h]	0			0			0			0		

Intersection Settings

Cycle Length [s]	100
Lost time [s]	10.00

Phasing & Timing

Control Type	Protecte	Permiss	Overlap	Protecte	Permiss	Permiss	Protecte	Permiss	Permiss	Protecte	Permiss	Permiss
Signal group	5	2	2	1	6	0	3	8	0	7	4	0
Auxiliary Signal Groups			2,7									
Lead / Lag	Lead	-	-	Lead	-	-	Lead	-	-	Lead	-	-

Movement, Approach, & Intersection Results

V/C, Movement V/C Ratio	0.03	0.04	0.00	0.02	0.10	0.10	0.10	0.23	0.05	0.17	0.34	0.01
Intersection LOS	B											
Intersection V/C	0.679											

Intersection Level Of Service Report
Intersection 5: Stewart Avenue (NS) at Live Oak Avenue (EW)

Control Type:	Signalized	Delay (sec / veh):	-
Analysis Method:	ICU 1	Level Of Service:	D
Analysis Period:	15 minutes	Volume to Capacity (v/c):	0.844

Intersection Setup

Name	Stewart Avenue			Stewart Avenue			Live Oak Avenue			Live Oak Avenue		
Approach	Northbound			Southbound			Eastbound			Westbound		
Lane Configuration												
Turning Movement	Left	Thru	Right	Left	Thru	Right	Left	Thru	Right	Left	Thru	Right
Lane Width [ft]	12.00	12.00	12.00	12.00	12.00	12.00	12.00	12.00	12.00	12.00	12.00	12.00
No. of Lanes in Pocket	0	0	0	1	0	0	1	0	0	1	0	0
Pocket Length [ft]	100.00	100.00	100.00	100.00	100.00	100.00	165.00	100.00	100.00	100.00	100.00	100.00
Speed [mph]	30.00			30.00			45.00			45.00		
Grade [%]	0.00			0.00			0.00			0.00		
Crosswalk	Yes			Yes			No			Yes		

Volumes

Name	Stewart Avenue			Stewart Avenue			Live Oak Avenue			Live Oak Avenue		
Base Volume Input [veh/h]	239	112	28	10	35	49	12	609	25	23	1450	26
Base Volume Adjustment Factor	1.0000	1.0000	1.0000	1.0000	1.0000	1.0000	1.0000	1.0000	1.0000	1.0000	1.0000	1.0000
Heavy Vehicles Percentage [%]	2.00	2.00	2.00	2.00	2.00	2.00	2.00	2.00	2.00	2.00	2.00	2.00
Growth Rate	1.01	1.01	1.01	1.01	1.01	1.01	1.01	1.01	1.01	1.01	1.01	1.01
In-Process Volume [veh/h]	0	0	0	0	0	0	0	0	0	0	0	0
Site-Generated Trips [veh/h]	0	2	5	0	2	0	0	146	0	2	95	4
Diverted Trips [veh/h]	0	0	0	0	0	0	0	0	0	0	0	0
Pass-by Trips [veh/h]	0	0	0	0	0	0	0	0	0	0	0	0
Existing Site Adjustment Volume [veh/h]	0	0	0	0	0	0	0	0	0	0	0	0
Other Volume [veh/h]	0	0	0	0	0	0	0	0	0	0	0	0
Total Hourly Volume [veh/h]	241	115	33	10	37	49	12	761	25	25	1560	30
Peak Hour Factor	1.0000	1.0000	1.0000	1.0000	1.0000	1.0000	1.0000	1.0000	1.0000	1.0000	1.0000	1.0000
Other Adjustment Factor	1.0000	1.0000	1.0000	1.0000	1.0000	1.0000	1.0000	1.0000	1.0000	1.0000	1.0000	1.0000
Total 15-Minute Volume [veh/h]	60	29	8	3	9	12	3	190	6	6	390	8
Total Analysis Volume [veh/h]	241	115	33	10	37	49	12	761	25	25	1560	30
Pedestrian Volume [ped/h]	0			0			0			0		
Bicycle Volume [bicycles/h]	0			0			0			0		

Intersection Settings

Cycle Length [s]	100
Lost time [s]	10.00

Phasing & Timing

Control Type	Permiss	Permiss	Permiss	Permiss	Permiss	Permiss	Permiss	Permiss	Permiss	Permiss	Permiss	Permiss
Signal group	0	2	0	0	6	0	0	8	0	0	4	0
Auxiliary Signal Groups												
Lead / Lag	-	-	-	-	-	-	-	-	-	-	-	-

Movement, Approach, & Intersection Results

V/C, Movement V/C Ratio	0.15	0.24	0.24	0.01	0.02	0.03	0.01	0.24	0.02	0.02	0.49	0.02
Intersection LOS	D											
Intersection V/C	0.844											

Intersection Level Of Service Report
Intersection 6: Baldwin Park Boulevard (NS) at Live Oak Avenue (EW)

Control Type:	Signalized	Delay (sec / veh):	-
Analysis Method:	ICU 1	Level Of Service:	A
Analysis Period:	15 minutes	Volume to Capacity (v/c):	0.596

Intersection Setup

Name	Baldwin Park Boulevard						Live Oak Avenue			Live Oak Avenue		
Approach	Northbound			Southbound			Eastbound			Westbound		
Lane Configuration												
Turning Movement	Left	Thru	Right	Left	Thru	Right	Left	Thru	Right	Left	Thru	Right
Lane Width [ft]	12.00	12.00	12.00	12.00	12.00	12.00	12.00	12.00	12.00	12.00	12.00	12.00
No. of Lanes in Pocket	1	0	0	0	0	0	0	0	0	1	0	0
Pocket Length [ft]	100.00	100.00	100.00	100.00	100.00	100.00	100.00	100.00	100.00	200.00	100.00	100.00
Speed [mph]	40.00			35.00			45.00			45.00		
Grade [%]	0.00			0.00			0.00			0.00		
Crosswalk	Yes			Yes			No			No		

Volumes

Name	Baldwin Park Boulevard						Live Oak Avenue			Live Oak Avenue		
Base Volume Input [veh/h]	311	0	237	0	0	0	0	581	89	143	1056	0
Base Volume Adjustment Factor	1.0000	1.0000	1.0000	1.0000	1.0000	1.0000	1.0000	1.0000	1.0000	1.0000	1.0000	1.0000
Heavy Vehicles Percentage [%]	2.00	2.00	2.00	2.00	2.00	2.00	2.00	2.00	2.00	2.00	2.00	2.00
Growth Rate	1.01	1.01	1.01	1.01	1.01	1.01	1.01	1.01	1.01	1.01	1.01	1.01
In-Process Volume [veh/h]	0	0	0	0	0	0	0	0	0	0	0	0
Site-Generated Trips [veh/h]	13	10	18	13	4	18	44	102	5	6	69	44
Diverted Trips [veh/h]	0	0	0	0	0	0	0	0	0	0	0	0
Pass-by Trips [veh/h]	0	0	0	0	0	0	0	0	0	0	0	0
Existing Site Adjustment Volume [veh/h]	0	0	0	0	0	0	0	0	0	0	0	0
Other Volume [veh/h]	0	0	0	0	0	0	0	0	0	0	0	0
Total Hourly Volume [veh/h]	327	10	257	13	4	18	44	689	95	150	1136	44
Peak Hour Factor	1.0000	1.0000	1.0000	1.0000	1.0000	1.0000	1.0000	1.0000	1.0000	1.0000	1.0000	1.0000
Other Adjustment Factor	1.0000	1.0000	1.0000	1.0000	1.0000	1.0000	1.0000	1.0000	1.0000	1.0000	1.0000	1.0000
Total 15-Minute Volume [veh/h]	82	3	64	3	1	5	11	172	24	38	284	11
Total Analysis Volume [veh/h]	327	10	257	13	4	18	44	689	95	150	1136	44
Pedestrian Volume [ped/h]	0			0			0			0		
Bicycle Volume [bicycles/h]	0			0			0			0		

Intersection Settings

Cycle Length [s]	100
Lost time [s]	10.00

Phasing & Timing

Control Type	Permiss	Permiss	Permiss	Permiss	Permiss	Permiss	Permiss	Permiss	Permiss	Protecte	Permiss	Permiss
Signal group	5	0	0	0	0	0	0	8	0	7	4	0
Auxiliary Signal Groups												
Lead / Lag	Lead	-	-	-	-	-	-	-	-	Lead	-	-

Movement, Approach, & Intersection Results

V/C, Movement V/C Ratio	0.10	0.00	0.00	0.00	0.00	0.00	0.03	0.22	0.06	0.09	0.36	0.03
Intersection LOS	A											
Intersection V/C	0.596											

Intersection Level Of Service Report
Intersection 7: Arrow Highway (NS) at Live Oak Ave/Arrow Hwy (EW)

Control Type:	Signalized	Delay (sec / veh):	-
Analysis Method:	ICU 1	Level Of Service:	B
Analysis Period:	15 minutes	Volume to Capacity (v/c):	0.675

Intersection Setup

Name			Live Oak Avenue		Arrow Highway	
Approach	Southbound		Eastbound		Westbound	
Lane Configuration						
Turning Movement	Left	Right	Left	Thru	Thru	Right
Lane Width [ft]	12.00	12.00	12.00	12.00	12.00	12.00
No. of Lanes in Pocket	0	0	1	0	0	0
Pocket Length [ft]	100.00	100.00	160.00	100.00	100.00	100.00
Speed [mph]	35.00		45.00		45.00	
Grade [%]	0.00		0.00		0.00	
Crosswalk	No		Yes		No	

Volumes

Name			Live Oak Avenue		Arrow Highway	
Base Volume Input [veh/h]	296	59	113	634	1117	1772
Base Volume Adjustment Factor	1.0000	1.0000	1.0000	1.0000	1.0000	1.0000
Heavy Vehicles Percentage [%]	2.00	2.00	2.00	2.00	2.00	2.00
Growth Rate	1.01	1.01	1.01	1.01	1.01	1.00
In-Process Volume [veh/h]	0	0	0	0	0	0
Site-Generated Trips [veh/h]	25	35	20	113	84	39
Diverted Trips [veh/h]	0	0	0	0	0	0
Pass-by Trips [veh/h]	0	0	0	0	0	0
Existing Site Adjustment Volume [veh/h]	0	0	0	0	0	0
Other Volume [veh/h]	0	0	0	0	0	0
Total Hourly Volume [veh/h]	324	95	134	753	1212	1811
Peak Hour Factor	1.0000	1.0000	1.0000	1.0000	1.0000	1.0000
Other Adjustment Factor	1.0000	1.0000	1.0000	1.0000	1.0000	1.0000
Total 15-Minute Volume [veh/h]	81	24	34	188	303	453
Total Analysis Volume [veh/h]	324	95	134	753	1212	1811
Pedestrian Volume [ped/h]	0		0		0	
Bicycle Volume [bicycles/h]	0		0		0	

Intersection Settings

Cycle Length [s]	100
Lost time [s]	10.00

Phasing & Timing

Control Type	Permissive	Permissive	Permissive	Permissive	Permissive	Unsignalized
Signal group	1	0	0	8	4	0
Auxiliary Signal Groups						
Lead / Lag	Lead	-	-	-	-	-

Movement, Approach, & Intersection Results

V/C, Movement V/C Ratio	0.10	0.06	0.08	0.24	0.38	0.00
Intersection LOS	B					
Intersection V/C	0.675					

Intersection Level Of Service Report
Intersection 8: Maine Avenue (NS) at Arrow Highway (EW)

Control Type:	Signalized	Delay (sec / veh):	-
Analysis Method:	ICU 1	Level Of Service:	D
Analysis Period:	15 minutes	Volume to Capacity (v/c):	0.821

Intersection Setup

Name	Maine Avenue		Arrow Highway		Arrow Highway	
Approach	Northbound		Eastbound		Westbound	
Lane Configuration						
Turning Movement	Left	Right	Thru	Right	Left	Thru
Lane Width [ft]	12.00	12.00	12.00	12.00	12.00	12.00
No. of Lanes in Pocket	0	1	0	0	1	0
Pocket Length [ft]	100.00	50.00	100.00	100.00	80.00	100.00
Speed [mph]	35.00		45.00		45.00	
Grade [%]	0.00		0.00		0.00	
Crosswalk	Yes		No		Yes	

Volumes

Name	Maine Avenue		Arrow Highway		Arrow Highway	
Base Volume Input [veh/h]	606	96	869	172	61	2288
Base Volume Adjustment Factor	1.0000	1.0000	1.0000	1.0000	1.0000	1.0000
Heavy Vehicles Percentage [%]	2.00	2.00	2.00	2.00	2.00	2.00
Growth Rate	1.01	1.01	1.01	1.01	1.01	1.01
In-Process Volume [veh/h]	0	0	0	0	0	0
Site-Generated Trips [veh/h]	7	0	134	4	0	116
Diverted Trips [veh/h]	0	0	0	0	0	0
Pass-by Trips [veh/h]	0	0	0	0	0	0
Existing Site Adjustment Volume [veh/h]	0	0	0	0	0	0
Other Volume [veh/h]	0	0	0	0	0	0
Total Hourly Volume [veh/h]	619	97	1012	178	62	2427
Peak Hour Factor	1.0000	1.0000	1.0000	1.0000	1.0000	1.0000
Other Adjustment Factor	1.0000	1.0000	1.0000	1.0000	1.0000	1.0000
Total 15-Minute Volume [veh/h]	155	24	253	45	16	607
Total Analysis Volume [veh/h]	619	97	1012	178	62	2427
Pedestrian Volume [ped/h]	0		0		0	
Bicycle Volume [bicycles/h]	0		0		0	

Intersection Settings

Cycle Length [s]	100
Lost time [s]	10.00

Phasing & Timing

Control Type	Split	Split	Permissive	Permissive	Permissive	Permissive
Signal group	5	0	8	0	0	4
Auxiliary Signal Groups						
Lead / Lag	Lead	-	-	-	-	-

Movement, Approach, & Intersection Results

V/C, Movement V/C Ratio	0.19	0.06	0.32	0.11	0.04	0.51
Intersection LOS	D					
Intersection V/C	0.821					

Intersection Level Of Service Report

Intersection 9: Santa Fe Dam/Azusa Canyon Road (NS) at Arrow Highway (EW)

Control Type:	Signalized	Delay (sec / veh):	-
Analysis Method:	ICU 1	Level Of Service:	E
Analysis Period:	15 minutes	Volume to Capacity (v/c):	0.963

Intersection Setup

Name	Azusa Canyon Road						Arrow Highway			Arrow Highway		
Approach	Northbound			Southbound			Eastbound			Westbound		
Lane Configuration												
Turning Movement	Left	Thru	Right	Left	Thru	Right	Left	Thru	Right	Left	Thru	Right
Lane Width [ft]	12.00	12.00	12.00	12.00	12.00	12.00	12.00	12.00	12.00	12.00	12.00	12.00
No. of Lanes in Pocket	1	0	0	0	0	0	1	0	0	1	0	0
Pocket Length [ft]	200.00	100.00	100.00	100.00	100.00	100.00	185.00	100.00	100.00	180.00	100.00	100.00
Speed [mph]	35.00			35.00			45.00			45.00		
Grade [%]	0.00			0.00			0.00			0.00		
Crosswalk	Yes			Yes			No			Yes		

Volumes

Name	Azusa Canyon Road						Arrow Highway			Arrow Highway		
Base Volume Input [veh/h]	837	14	145	11	3	12	19	624	122	67	1708	23
Base Volume Adjustment Factor	1.0000	1.0000	1.0000	1.0000	1.0000	1.0000	1.0000	1.0000	1.0000	1.0000	1.0000	1.0000
Heavy Vehicles Percentage [%]	2.00	2.00	2.00	2.00	2.00	2.00	2.00	2.00	2.00	2.00	2.00	2.00
Growth Rate	1.01	1.00	1.01	1.00	1.00	1.00	1.00	1.01	1.01	1.01	1.01	1.00
In-Process Volume [veh/h]	0	0	0	0	0	0	0	0	0	0	0	0
Site-Generated Trips [veh/h]	26	0	11	0	0	0	0	111	22	3	84	0
Diverted Trips [veh/h]	0	0	0	0	0	0	0	0	0	0	0	0
Pass-by Trips [veh/h]	0	0	0	0	0	0	0	0	0	0	0	0
Existing Site Adjustment Volume [veh/h]	0	0	0	0	0	0	0	0	0	0	0	0
Other Volume [veh/h]	0	0	0	0	0	0	0	0	0	0	0	0
Total Hourly Volume [veh/h]	871	14	157	11	3	12	19	741	145	71	1809	23
Peak Hour Factor	1.0000	1.0000	1.0000	1.0000	1.0000	1.0000	1.0000	1.0000	1.0000	1.0000	1.0000	1.0000
Other Adjustment Factor	1.0000	1.0000	1.0000	1.0000	1.0000	1.0000	1.0000	1.0000	1.0000	1.0000	1.0000	1.0000
Total 15-Minute Volume [veh/h]	218	4	39	3	1	3	5	185	36	18	452	6
Total Analysis Volume [veh/h]	871	14	157	11	3	12	19	741	145	71	1809	23
Pedestrian Volume [ped/h]	0			0			0			0		
Bicycle Volume [bicycles/h]	0			0			0			0		

Intersection Settings

Cycle Length [s]	100
Lost time [s]	10.00

Phasing & Timing

Control Type	Split	Split	Split	Split	Split	Split	Protecte	Permiss	Permiss	Protecte	Permiss	Permiss
Signal group	0	2	0	0	6	0	3	8	0	7	4	0
Auxiliary Signal Groups												
Lead / Lag	-	-	-	-	-	-	Lead	-	-	Lead	-	-

Movement, Approach, & Intersection Results

V/C, Movement V/C Ratio	0.27	0.28	0.10	0.01	0.01	0.01	0.01	0.23	0.09	0.04	0.57	0.01
Intersection LOS	E											
Intersection V/C	0.963											

Intersection Level Of Service Report
Intersection 10: 4th Street (NS) at Arrow Highway (EW)

Control Type:	Signalized	Delay (sec / veh):	-
Analysis Method:	ICU 1	Level Of Service:	A
Analysis Period:	15 minutes	Volume to Capacity (v/c):	0.371

Intersection Setup

Name	4th Street			4th Street			Arrow Highway			Arrow Highway		
Approach	Northbound			Southbound			Eastbound			Westbound		
Lane Configuration												
Turning Movement	Left	Thru	Right	Left	Thru	Right	Left	Thru	Right	Left	Thru	Right
Lane Width [ft]	12.00	12.00	12.00	12.00	12.00	12.00	12.00	12.00	12.00	12.00	12.00	12.00
No. of Lanes in Pocket	1	0	0	0	0	0	1	0	1	1	0	0
Pocket Length [ft]	55.00	100.00	100.00	100.00	100.00	100.00	145.00	100.00	150.00	195.00	100.00	100.00
Speed [mph]	35.00			25.00			45.00			45.00		
Grade [%]	0.00			0.00			0.00			0.00		
Crosswalk	Yes			Yes			Yes			Yes		

Volumes

Name	4th Street			4th Street			Arrow Highway			Arrow Highway		
Base Volume Input [veh/h]	76	1	22	3	2	12	20	769	126	77	0	0
Base Volume Adjustment Factor	1.0000	1.0000	1.0000	1.0000	1.0000	1.0000	1.0000	1.0000	1.0000	1.0000	1.0000	1.0000
Heavy Vehicles Percentage [%]	2.00	2.00	2.00	2.00	2.00	2.00	2.00	2.00	2.00	2.00	2.00	2.00
Growth Rate	1.01	1.01	1.01	1.01	1.01	1.01	1.01	1.01	1.01	1.01	1.01	1.01
In-Process Volume [veh/h]	0	0	0	0	0	0	0	0	0	0	0	0
Site-Generated Trips [veh/h]	0	0	0	0	0	0	0	122	0	0	87	0
Diverted Trips [veh/h]	0	0	0	0	0	0	0	0	0	0	0	0
Pass-by Trips [veh/h]	0	0	0	0	0	0	0	0	0	0	0	0
Existing Site Adjustment Volume [veh/h]	0	0	0	0	0	0	0	0	0	0	0	0
Other Volume [veh/h]	0	0	0	0	0	0	0	0	0	0	0	0
Total Hourly Volume [veh/h]	77	1	22	3	2	12	20	899	127	78	87	0
Peak Hour Factor	1.0000	1.0000	1.0000	1.0000	1.0000	1.0000	1.0000	1.0000	1.0000	1.0000	1.0000	1.0000
Other Adjustment Factor	1.0000	1.0000	1.0000	1.0000	1.0000	1.0000	1.0000	1.0000	1.0000	1.0000	1.0000	1.0000
Total 15-Minute Volume [veh/h]	19	0	6	1	1	3	5	225	32	20	22	0
Total Analysis Volume [veh/h]	77	1	22	3	2	12	20	899	127	78	87	0
Pedestrian Volume [ped/h]	0			0			0			0		
Bicycle Volume [bicycles/h]	0			0			0			0		

Intersection Settings

Cycle Length [s]	100
Lost time [s]	10.00

Phasing & Timing

Control Type	Split	Split	Split	Split	Split	Split	Protecte	Permiss	Permiss	Protecte	Permiss	Permiss
Signal group	0	2	0	0	6	0	3	8	0	7	4	0
Auxiliary Signal Groups												
Lead / Lag	-	-	-	-	-	-	Lead	-	-	Lead	-	-

Movement, Approach, & Intersection Results

V/C, Movement V/C Ratio	0.02	0.02	0.01	0.00	0.01	0.01	0.01	0.19	0.08	0.05	0.03	0.00
Intersection LOS	A											
Intersection V/C	0.371											

Intersection Level Of Service Report
Intersection 11: Irwindale Avenue (NS) at I-210 WB Ramps (EW)

Control Type:	Signalized	Delay (sec / veh):	-
Analysis Method:	ICU 1	Level Of Service:	A
Analysis Period:	15 minutes	Volume to Capacity (v/c):	0.595

Intersection Setup

Name	Irwindale Avenue				I-210 WB Ramps	
Approach	Northbound		Southbound		Westbound	
Lane Configuration						
Turning Movement	Thru	Right	Left	Thru	Left	Right
Lane Width [ft]	12.00	12.00	12.00	12.00	12.00	12.00
No. of Lanes in Pocket	0	0	0	0	0	0
Pocket Length [ft]	100.00	100.00	100.00	100.00	100.00	100.00
Speed [mph]	35.00		35.00		35.00	
Grade [%]	0.00		0.00		0.00	
Crosswalk	No		No		Yes	

Volumes

Name	Irwindale Avenue				I-210 WB Ramps	
Base Volume Input [veh/h]	826	0	0	1049	281	169
Base Volume Adjustment Factor	1.0000	1.0000	1.0000	1.0000	1.0000	1.0000
Heavy Vehicles Percentage [%]	2.00	2.00	2.00	2.00	2.00	2.00
Growth Rate	1.01	1.00	1.00	1.01	1.01	1.01
In-Process Volume [veh/h]	0	0	0	0	0	0
Site-Generated Trips [veh/h]	301	0	0	223	85	188
Diverted Trips [veh/h]	0	0	0	0	0	0
Pass-by Trips [veh/h]	0	0	0	0	0	0
Existing Site Adjustment Volume [veh/h]	0	0	0	0	0	0
Other Volume [veh/h]	0	0	0	0	0	0
Total Hourly Volume [veh/h]	1135	0	0	1282	369	359
Peak Hour Factor	1.0000	1.0000	1.0000	1.0000	1.0000	1.0000
Other Adjustment Factor	1.0000	1.0000	1.0000	1.0000	1.0000	1.0000
Total 15-Minute Volume [veh/h]	284	0	0	321	92	90
Total Analysis Volume [veh/h]	1135	0	0	1282	369	359
Pedestrian Volume [ped/h]	0		0		0	
Bicycle Volume [bicycles/h]	0		0		0	

Intersection Settings

Cycle Length [s]	100
Lost time [s]	10.00

Phasing & Timing

Control Type	Permissive	Permissive	Permissive	Permissive	Split	Split
Signal group	2	0	0	6	7	0
Auxiliary Signal Groups						
Lead / Lag	-	-	-	-	Lead	-

Movement, Approach, & Intersection Results

V/C, Movement V/C Ratio	0.24	0.00	0.00	0.27	0.12	0.23
Intersection LOS	A					
Intersection V/C	0.595					

Intersection Level Of Service Report
Intersection 12: Irwindale Avenue (NS) at I-210 EB Ramps (EW)

Control Type:	Signalized	Delay (sec / veh):	-
Analysis Method:	ICU 1	Level Of Service:	C
Analysis Period:	15 minutes	Volume to Capacity (v/c):	0.798

Intersection Setup

Name	Irwindale Avenue			Irwindale Avenue			I-210 EB Ramps			I-210 EB Ramps		
Approach	Northbound			Southbound			Eastbound			Westbound		
Lane Configuration												
Turning Movement	Left	Thru	Right	Left	Thru	Right	Left	Thru	Right	Left	Thru	Right
Lane Width [ft]	12.00	12.00	12.00	12.00	12.00	12.00	12.00	12.00	12.00	12.00	12.00	12.00
No. of Lanes in Pocket	0	0	1	1	0	0	0	0	0	0	0	0
Pocket Length [ft]	100.00	100.00	505.00	330.00	100.00	100.00	100.00	100.00	100.00	100.00	100.00	100.00
Speed [mph]	35.00			35.00			35.00			35.00		
Grade [%]	0.00			0.00			0.00			0.00		
Crosswalk	No			No			No			Yes		

Volumes

Name	Irwindale Avenue			Irwindale Avenue			I-210 EB Ramps			I-210 EB Ramps		
Base Volume Input [veh/h]	0	829	235	167	595	0	444	0	748	0	0	0
Base Volume Adjustment Factor	1.0000	1.0000	1.0000	1.0000	1.0000	1.0000	1.0000	1.0000	1.0000	1.0000	1.0000	1.0000
Heavy Vehicles Percentage [%]	2.00	2.00	2.00	2.00	2.00	2.00	2.00	2.00	2.00	2.00	2.00	2.00
Growth Rate	1.00	1.01	1.01	1.01	1.01	1.00	1.01	1.00	1.01	1.00	1.00	1.00
In-Process Volume [veh/h]	0	0	0	0	0	0	0	0	0	0	0	0
Site-Generated Trips [veh/h]	0	63	18	79	101	0	268	0	116	0	0	0
Diverted Trips [veh/h]	0	0	0	0	0	0	0	0	0	0	0	0
Pass-by Trips [veh/h]	0	0	0	0	0	0	0	0	0	0	0	0
Existing Site Adjustment Volume [veh/h]	0	0	0	0	0	0	0	0	0	0	0	0
Other Volume [veh/h]	0	0	0	0	0	0	0	0	0	0	0	0
Total Hourly Volume [veh/h]	0	900	255	248	702	0	716	0	871	0	0	0
Peak Hour Factor	1.0000	1.0000	1.0000	1.0000	1.0000	1.0000	1.0000	1.0000	1.0000	1.0000	1.0000	1.0000
Other Adjustment Factor	1.0000	1.0000	1.0000	1.0000	1.0000	1.0000	1.0000	1.0000	1.0000	1.0000	1.0000	1.0000
Total 15-Minute Volume [veh/h]	0	225	64	62	176	0	179	0	218	0	0	0
Total Analysis Volume [veh/h]	0	900	255	248	702	0	716	0	871	0	0	0
Pedestrian Volume [ped/h]	0			0			0			0		
Bicycle Volume [bicycles/h]	0			0			0			0		

Intersection Settings

Cycle Length [s]	100
Lost time [s]	10.00

Phasing & Timing

Control Type	Permiss	Permiss	Permiss	Protecte	Permiss	Permiss	Split	Permiss	Split	Permiss	Permiss	Permiss
Signal group	0	2	0	1	6	0	3	0	0	0	0	0
Auxiliary Signal Groups												
Lead / Lag	-	-	-	Lead	-	-	Lead	-	-	-	-	-

Movement, Approach, & Intersection Results

V/C, Movement V/C Ratio	0.00	0.28	0.16	0.08	0.22	0.00	0.22	0.00	0.33	0.00	0.00	0.00
Intersection LOS	C											
Intersection V/C	0.798											

Intersection Level Of Service Report

Intersection 13: Irwindale Avenue (NS) at Jardin De Roca/Irwindale Rd (EW)

Control Type:	Signalized	Delay (sec / veh):	-
Analysis Method:	ICU 1	Level Of Service:	B
Analysis Period:	15 minutes	Volume to Capacity (v/c):	0.663

Intersection Setup

Name	Irwindale Avenue			Irwindale Avenue			Jardin De Roca			Irwindale Road		
Approach	Northbound			Southbound			Eastbound			Westbound		
Lane Configuration												
Turning Movement	Left	Thru	Right	Left	Thru	Right	Left	Thru	Right	Left	Thru	Right
Lane Width [ft]	12.00	12.00	12.00	12.00	12.00	12.00	12.00	12.00	12.00	12.00	12.00	12.00
No. of Lanes in Pocket	1	0	1	1	0	0	0	0	0	0	0	0
Pocket Length [ft]	130.00	100.00	180.00	245.00	100.00	100.00	100.00	100.00	100.00	100.00	100.00	100.00
Speed [mph]	35.00			35.00			25.00			25.00		
Grade [%]	0.00			0.00			0.00			0.00		
Crosswalk	No			No			No			Yes		

Volumes

Name	Irwindale Avenue			Irwindale Avenue			Jardin De Roca			Irwindale Road		
Base Volume Input [veh/h]	53	1015	115	168	1133	41	10	0	13	24	0	35
Base Volume Adjustment Factor	1.0000	1.0000	1.0000	1.0000	1.0000	1.0000	1.0000	1.0000	1.0000	1.0000	1.0000	1.0000
Heavy Vehicles Percentage [%]	2.00	2.00	2.00	2.00	2.00	2.00	2.00	2.00	2.00	2.00	2.00	2.00
Growth Rate	1.01	1.01	1.01	1.01	1.01	1.01	1.01	1.00	1.01	1.01	1.00	1.01
In-Process Volume [veh/h]	0	0	0	0	0	0	0	0	0	0	0	0
Site-Generated Trips [veh/h]	0	55	12	94	123	0	0	0	0	2	0	26
Diverted Trips [veh/h]	0	0	0	0	0	0	0	0	0	0	0	0
Pass-by Trips [veh/h]	0	0	0	0	0	0	0	0	0	0	0	0
Existing Site Adjustment Volume [veh/h]	0	0	0	0	0	0	0	0	0	0	0	0
Other Volume [veh/h]	0	0	0	0	0	0	0	0	0	0	0	0
Total Hourly Volume [veh/h]	54	1080	128	264	1267	41	10	0	13	26	0	61
Peak Hour Factor	1.0000	1.0000	1.0000	1.0000	1.0000	1.0000	1.0000	1.0000	1.0000	1.0000	1.0000	1.0000
Other Adjustment Factor	1.0000	1.0000	1.0000	1.0000	1.0000	1.0000	1.0000	1.0000	1.0000	1.0000	1.0000	1.0000
Total 15-Minute Volume [veh/h]	14	270	32	66	317	10	3	0	3	7	0	15
Total Analysis Volume [veh/h]	54	1080	128	264	1267	41	10	0	13	26	0	61
Pedestrian Volume [ped/h]	0			0			0			0		
Bicycle Volume [bicycles/h]	0			0			0			0		

Intersection Settings

Cycle Length [s]	100
Lost time [s]	10.00

Phasing & Timing

Control Type	Protecte	Permiss	Permiss	Protecte	Permiss	Permiss	Permiss	Permiss	Permiss	Permiss	Permiss	Permiss
Signal group	5	2	0	1	6	0	3	0	0	7	0	0
Auxiliary Signal Groups												
Lead / Lag	Lead	-	-	Lead	-	-	Lead	-	-	Lead	-	-

Movement, Approach, & Intersection Results

V/C, Movement V/C Ratio	0.03	0.34	0.08	0.17	0.40	0.03	0.01	0.00	0.01	0.02	0.00	0.08
Intersection LOS	B											
Intersection V/C	0.663											

Intersection Level Of Service Report
Intersection 14: Irwindale Avenue (NS) at 1st Street (EW)

Control Type:	Signalized	Delay (sec / veh):	-
Analysis Method:	ICU 1	Level Of Service:	A
Analysis Period:	15 minutes	Volume to Capacity (v/c):	0.528

Intersection Setup

Name	Irwindale Avenue			Irwindale Avenue			1st Street			1st Street		
Approach	Northbound			Southbound			Eastbound			Westbound		
Lane Configuration												
Turning Movement	Left	Thru	Right	Left	Thru	Right	Left	Thru	Right	Left	Thru	Right
Lane Width [ft]	12.00	12.00	12.00	12.00	12.00	12.00	12.00	12.00	12.00	12.00	12.00	12.00
No. of Lanes in Pocket	1	0	1	1	0	1	1	0	1	1	0	1
Pocket Length [ft]	100.00	100.00	70.00	120.00	100.00	240.00	90.00	100.00	95.00	75.00	100.00	75.00
Speed [mph]	35.00			35.00			35.00			25.00		
Grade [%]	0.00			0.00			0.00			0.00		
Crosswalk	Yes			No			Yes			Yes		

Volumes

Name	Irwindale Avenue			Irwindale Avenue			1st Street			1st Street		
Base Volume Input [veh/h]	38	1187	4	14	827	130	54	0	21	0	0	8
Base Volume Adjustment Factor	1.0000	1.0000	1.0000	1.0000	1.0000	1.0000	1.0000	1.0000	1.0000	1.0000	1.0000	1.0000
Heavy Vehicles Percentage [%]	2.00	2.00	2.00	2.00	2.00	2.00	2.00	2.00	2.00	2.00	2.00	2.00
Growth Rate	1.01	1.01	1.01	1.01	1.01	1.01	1.01	1.01	1.01	1.01	1.01	1.01
In-Process Volume [veh/h]	0	0	0	0	0	0	0	0	0	0	0	0
Site-Generated Trips [veh/h]	6	57	0	0	72	53	10	0	0	0	0	0
Diverted Trips [veh/h]	0	0	0	0	0	0	0	0	0	0	0	0
Pass-by Trips [veh/h]	0	0	0	0	0	0	0	0	0	0	0	0
Existing Site Adjustment Volume [veh/h]	0	0	0	0	0	0	0	0	0	0	0	0
Other Volume [veh/h]	0	0	0	0	0	0	0	0	0	0	0	0
Total Hourly Volume [veh/h]	44	1256	4	14	907	184	65	0	21	0	0	8
Peak Hour Factor	1.0000	1.0000	1.0000	1.0000	1.0000	1.0000	1.0000	1.0000	1.0000	1.0000	1.0000	1.0000
Other Adjustment Factor	1.0000	1.0000	1.0000	1.0000	1.0000	1.0000	1.0000	1.0000	1.0000	1.0000	1.0000	1.0000
Total 15-Minute Volume [veh/h]	11	314	1	4	227	46	16	0	5	0	0	2
Total Analysis Volume [veh/h]	44	1256	4	14	907	184	65	0	21	0	0	8
Pedestrian Volume [ped/h]	0			0			0			0		
Bicycle Volume [bicycles/h]	0			0			0			0		

Intersection Settings

Cycle Length [s]	100
Lost time [s]	10.00

Phasing & Timing

Control Type	Permiss	Permiss	Permiss	Permiss	Permiss	Permiss	Split	Split	Split	Split	Split	Split
Signal group	0	2	0	0	6	0	0	8	0	0	4	0
Auxiliary Signal Groups												
Lead / Lag	-	-	-	-	-	-	-	-	-	-	-	-

Movement, Approach, & Intersection Results

V/C, Movement V/C Ratio	0.03	0.39	0.39	0.01	0.19	0.12	0.02	0.00	0.01	0.00	0.00	0.01
Intersection LOS	A											
Intersection V/C	0.528											

Intersection Level Of Service Report
Intersection 15: Irwindale Avenue (NS) at Gladstone Street (EW)

Control Type:	Signalized	Delay (sec / veh):	-
Analysis Method:	ICU 1	Level Of Service:	B
Analysis Period:	15 minutes	Volume to Capacity (v/c):	0.686

Intersection Setup

Name	Irwindale Avenue			Irwindale Avenue			Gladstone Street			Gladstone Street		
Approach	Northbound			Southbound			Eastbound			Westbound		
Lane Configuration												
Turning Movement	Left	Thru	Right	Left	Thru	Right	Left	Thru	Right	Left	Thru	Right
Lane Width [ft]	12.00	12.00	12.00	12.00	12.00	12.00	12.00	12.00	12.00	12.00	12.00	12.00
No. of Lanes in Pocket	1	0	0	2	0	0	1	0	0	1	0	1
Pocket Length [ft]	120.00	100.00	100.00	210.00	100.00	100.00	50.00	100.00	100.00	200.00	100.00	190.00
Speed [mph]	35.00			35.00			25.00			40.00		
Grade [%]	0.00			0.00			0.00			0.00		
Crosswalk	Yes			Yes			Yes			Yes		

Volumes

Name	Irwindale Avenue			Irwindale Avenue			Gladstone Street			Gladstone Street		
Base Volume Input [veh/h]	10	634	67	135	551	6	1	10	22	456	70	680
Base Volume Adjustment Factor	1.0000	1.0000	1.0000	1.0000	1.0000	1.0000	1.0000	1.0000	1.0000	1.0000	1.0000	1.0000
Heavy Vehicles Percentage [%]	2.00	2.00	2.00	2.00	2.00	2.00	2.00	2.00	2.00	2.00	2.00	2.00
Growth Rate	1.01	1.01	1.01	1.01	1.01	1.01	1.01	1.01	1.01	1.01	1.01	1.01
In-Process Volume [veh/h]	0	0	0	0	0	0	0	0	0	0	0	0
Site-Generated Trips [veh/h]	0	49	49	59	13	0	0	0	0	2	0	14
Diverted Trips [veh/h]	0	0	0	0	0	0	0	0	0	0	0	0
Pass-by Trips [veh/h]	0	0	0	0	0	0	0	0	0	0	0	0
Existing Site Adjustment Volume [veh/h]	0	0	0	0	0	0	0	0	0	0	0	0
Other Volume [veh/h]	0	0	0	0	0	0	0	0	0	0	0	0
Total Hourly Volume [veh/h]	10	689	117	195	570	6	1	10	22	463	71	701
Peak Hour Factor	1.0000	1.0000	1.0000	1.0000	1.0000	1.0000	1.0000	1.0000	1.0000	1.0000	1.0000	1.0000
Other Adjustment Factor	1.0000	1.0000	1.0000	1.0000	1.0000	1.0000	1.0000	1.0000	1.0000	1.0000	1.0000	1.0000
Total 15-Minute Volume [veh/h]	3	172	29	49	143	2	0	3	6	116	18	175
Total Analysis Volume [veh/h]	10	689	117	195	570	6	1	10	22	463	71	701
Pedestrian Volume [ped/h]	0			0			0			0		
Bicycle Volume [bicycles/h]	0			0			0			0		

Intersection Settings

Cycle Length [s]	100
Lost time [s]	10.00

Phasing & Timing

Control Type	Protecte	Permiss	Permiss	Protecte	Permiss	Permiss	Permiss	Permiss	Permiss	Permiss	Permiss	Overlap
Signal group	5	2	0	1	6	0	0	8	0	0	4	4
Auxiliary Signal Groups												1,4
Lead / Lag	Lead	-	-	Lead	-	-	-	-	-	-	-	-

Movement, Approach, & Intersection Results

V/C, Movement V/C Ratio	0.01	0.22	0.07	0.06	0.18	0.18	0.00	0.01	0.01	0.29	0.04	0.16
Intersection LOS	B											
Intersection V/C	0.686											

Intersection Level Of Service Report

Intersection 16: Irwindale Avenue (NS) at Arrow Highway (EW)

Control Type:	Signalized	Delay (sec / veh):	-
Analysis Method:	ICU 1	Level Of Service:	D
Analysis Period:	15 minutes	Volume to Capacity (v/c):	0.885

Intersection Setup

Name	Irwindale Avenue			Irwindale Avenue			Arrow Highway			Arrow Highway		
Approach	Northbound			Southbound			Eastbound			Westbound		
Lane Configuration												
Turning Movement	Left	Thru	Right	Left	Thru	Right	Left	Thru	Right	Left	Thru	Right
Lane Width [ft]	12.00	12.00	12.00	12.00	12.00	12.00	12.00	12.00	12.00	12.00	12.00	12.00
No. of Lanes in Pocket	1	0	0	1	0	1	2	0	0	1	0	0
Pocket Length [ft]	175.00	100.00	100.00	185.00	100.00	185.00	205.00	100.00	100.00	335.00	100.00	100.00
Speed [mph]	35.00			35.00			45.00			45.00		
Grade [%]	0.00			0.00			0.00			0.00		
Crosswalk	Yes			Yes			Yes			Yes		

Volumes

Name	Irwindale Avenue			Irwindale Avenue			Arrow Highway			Arrow Highway		
Base Volume Input [veh/h]	163	579	65	98	457	446	277	423	52	67	1022	98
Base Volume Adjustment Factor	1.0000	1.0000	1.0000	1.0000	1.0000	1.0000	1.0000	1.0000	1.0000	1.0000	1.0000	1.0000
Heavy Vehicles Percentage [%]	2.00	2.00	2.00	2.00	2.00	2.00	2.00	2.00	2.00	2.00	2.00	2.00
Growth Rate	1.01	1.01	1.01	1.01	1.01	1.01	1.01	1.01	1.01	1.01	1.01	1.01
In-Process Volume [veh/h]	0	0	0	0	0	0	0	0	0	0	0	0
Site-Generated Trips [veh/h]	9	26	1	2	10	3	56	62	4	1	75	16
Diverted Trips [veh/h]	0	0	0	0	0	0	0	0	0	0	0	0
Pass-by Trips [veh/h]	0	0	0	0	0	0	0	0	0	0	0	0
Existing Site Adjustment Volume [veh/h]	0	0	0	0	0	0	0	0	0	0	0	0
Other Volume [veh/h]	0	0	0	0	0	0	0	0	0	0	0	0
Total Hourly Volume [veh/h]	174	611	67	101	472	453	336	489	57	69	1107	115
Peak Hour Factor	1.0000	1.0000	1.0000	1.0000	1.0000	1.0000	1.0000	1.0000	1.0000	1.0000	1.0000	1.0000
Other Adjustment Factor	1.0000	1.0000	1.0000	1.0000	1.0000	1.0000	1.0000	1.0000	1.0000	1.0000	1.0000	1.0000
Total 15-Minute Volume [veh/h]	44	153	17	25	118	113	84	122	14	17	277	29
Total Analysis Volume [veh/h]	174	611	67	101	472	453	336	489	57	69	1107	115
Pedestrian Volume [ped/h]	0			0			0			0		
Bicycle Volume [bicycles/h]	0			0			0			0		

Intersection Settings

Cycle Length [s]	100
Lost time [s]	10.00

Phasing & Timing

Control Type	Protecte	Permiss	Permiss	Protecte	Permiss	Overlap	Protecte	Permiss	Permiss	Protecte	Permiss	Permiss
Signal group	5	2	0	1	6	6	3	8	0	7	4	0
Auxiliary Signal Groups						3,6						
Lead / Lag	Lead	-	-	Lead	-	-	Lead	-	-	Lead	-	-

Movement, Approach, & Intersection Results

V/C, Movement V/C Ratio	0.11	0.21	0.21	0.06	0.15	0.18	0.11	0.11	0.11	0.04	0.38	0.38
Intersection LOS	D											
Intersection V/C	0.885											

Intersection Level Of Service Report

Intersection 17: Vincent Avenue (NS) at Gladstone Street (EW)

Control Type:	Signalized	Delay (sec / veh):	-
Analysis Method:	ICU 1	Level Of Service:	A
Analysis Period:	15 minutes	Volume to Capacity (v/c):	0.531

Intersection Setup

Name	Vincent Avenue			Vincent Avenue			Gladstone Street			Gladstone Street		
Approach	Northbound			Southbound			Eastbound			Westbound		
Lane Configuration												
Turning Movement	Left	Thru	Right	Left	Thru	Right	Left	Thru	Right	Left	Thru	Right
Lane Width [ft]	12.00	12.00	12.00	12.00	12.00	12.00	12.00	12.00	12.00	12.00	12.00	12.00
No. of Lanes in Pocket	1	0	0	0	0	0	2	0	0	1	0	0
Pocket Length [ft]	195.00	100.00	100.00	100.00	100.00	100.00	230.00	100.00	100.00	175.00	100.00	100.00
Speed [mph]	45.00			25.00			45.00			45.00		
Grade [%]	0.00			0.00			0.00			0.00		
Crosswalk	Yes			Yes			No			Yes		

Volumes

Name	Vincent Avenue			Vincent Avenue			Gladstone Street			Gladstone Street		
Base Volume Input [veh/h]	265	29	147	16	8	38	43	97	64	178	942	2
Base Volume Adjustment Factor	1.0000	1.0000	1.0000	1.0000	1.0000	1.0000	1.0000	1.0000	1.0000	1.0000	1.0000	1.0000
Heavy Vehicles Percentage [%]	2.00	2.00	2.00	2.00	2.00	2.00	2.00	2.00	2.00	2.00	2.00	2.00
Growth Rate	1.01	1.01	1.01	1.01	1.01	1.01	1.01	1.01	1.01	1.01	1.01	1.01
In-Process Volume [veh/h]	0	0	0	0	0	0	0	0	0	0	0	0
Site-Generated Trips [veh/h]	5	0	4	0	0	0	0	4	104	28	11	0
Diverted Trips [veh/h]	0	0	0	0	0	0	0	0	0	0	0	0
Pass-by Trips [veh/h]	0	0	0	0	0	0	0	0	0	0	0	0
Existing Site Adjustment Volume [veh/h]	0	0	0	0	0	0	0	0	0	0	0	0
Other Volume [veh/h]	0	0	0	0	0	0	0	0	0	0	0	0
Total Hourly Volume [veh/h]	273	29	152	16	8	38	43	102	169	208	962	2
Peak Hour Factor	1.0000	1.0000	1.0000	1.0000	1.0000	1.0000	1.0000	1.0000	1.0000	1.0000	1.0000	1.0000
Other Adjustment Factor	1.0000	1.0000	1.0000	1.0000	1.0000	1.0000	1.0000	1.0000	1.0000	1.0000	1.0000	1.0000
Total 15-Minute Volume [veh/h]	68	7	38	4	2	10	11	26	42	52	241	1
Total Analysis Volume [veh/h]	273	29	152	16	8	38	43	102	169	208	962	2
Pedestrian Volume [ped/h]	0			0			0			0		
Bicycle Volume [bicycles/h]	0			0			0			0		

Intersection Settings

Cycle Length [s]	100
Lost time [s]	10.00

Phasing & Timing

Control Type	Split	Split	Split	Split	Split	Split	Protecte	Permiss	Permiss	Protecte	Permiss	Permiss
Signal group	0	2	0	0	6	0	3	8	0	7	4	0
Auxiliary Signal Groups												
Lead / Lag	-	-	-	-	-	-	Lead	-	-	Lead	-	-

Movement, Approach, & Intersection Results

V/C, Movement V/C Ratio	0.09	0.09	0.10	0.01	0.03	0.03	0.01	0.08	0.08	0.13	0.30	0.30
Intersection LOS	A											
Intersection V/C	0.531											

Intersection Level Of Service Report
Intersection 18: Vincent Avenue (NS) at Arrow Highway (EW)

Control Type:	Signalized	Delay (sec / veh):	-
Analysis Method:	ICU 1	Level Of Service:	C
Analysis Period:	15 minutes	Volume to Capacity (v/c):	0.774

Intersection Setup

Name	Vincent Avenue			Vincent Avenue			Arrow Highway			Arrow Highway		
Approach	Northbound			Southbound			Eastbound			Westbound		
Lane Configuration												
Turning Movement	Left	Thru	Right	Left	Thru	Right	Left	Thru	Right	Left	Thru	Right
Lane Width [ft]	12.00	12.00	12.00	12.00	12.00	12.00	12.00	12.00	12.00	12.00	12.00	12.00
No. of Lanes in Pocket	1	0	0	1	0	0	1	0	0	1	0	0
Pocket Length [ft]	200.00	100.00	100.00	200.00	100.00	100.00	215.00	100.00	100.00	160.00	100.00	100.00
Speed [mph]	45.00			45.00			45.00			45.00		
Grade [%]	0.00			0.00			0.00			0.00		
Crosswalk	Yes			Yes			Yes			Yes		

Volumes

Name	Vincent Avenue			Vincent Avenue			Arrow Highway			Arrow Highway		
Base Volume Input [veh/h]	161	285	88	22	189	65	58	378	88	138	1150	89
Base Volume Adjustment Factor	1.0000	1.0000	1.0000	1.0000	1.0000	1.0000	1.0000	1.0000	1.0000	1.0000	1.0000	1.0000
Heavy Vehicles Percentage [%]	2.00	2.00	2.00	2.00	2.00	2.00	2.00	2.00	2.00	2.00	2.00	2.00
Growth Rate	1.01	1.01	1.01	1.01	1.01	1.01	1.01	1.01	1.01	1.01	1.01	1.01
In-Process Volume [veh/h]	0	0	0	0	0	0	0	0	0	0	0	0
Site-Generated Trips [veh/h]	36	16	1	2	5	103	32	23	10	1	49	4
Diverted Trips [veh/h]	0	0	0	0	0	0	0	0	0	0	0	0
Pass-by Trips [veh/h]	0	0	0	0	0	0	0	0	0	0	0	0
Existing Site Adjustment Volume [veh/h]	0	0	0	0	0	0	0	0	0	0	0	0
Other Volume [veh/h]	0	0	0	0	0	0	0	0	0	0	0	0
Total Hourly Volume [veh/h]	199	304	90	24	196	169	91	405	99	140	1211	94
Peak Hour Factor	1.0000	1.0000	1.0000	1.0000	1.0000	1.0000	1.0000	1.0000	1.0000	1.0000	1.0000	1.0000
Other Adjustment Factor	1.0000	1.0000	1.0000	1.0000	1.0000	1.0000	1.0000	1.0000	1.0000	1.0000	1.0000	1.0000
Total 15-Minute Volume [veh/h]	50	76	23	6	49	42	23	101	25	35	303	24
Total Analysis Volume [veh/h]	199	304	90	24	196	169	91	405	99	140	1211	94
Pedestrian Volume [ped/h]	0			0			0			0		
Bicycle Volume [bicycles/h]	0			0			0			0		

Intersection Settings

Cycle Length [s]	100
Lost time [s]	10.00

Phasing & Timing

Control Type	Permiss	Permiss	Permiss	Permiss	Permiss	Permiss	Permiss	Permiss	Permiss	Permiss	Permiss	Permiss
Signal group	0	2	0	0	6	0	0	8	0	0	4	0
Auxiliary Signal Groups												
Lead / Lag	-	-	-	-	-	-	-	-	-	-	-	-

Movement, Approach, & Intersection Results

V/C, Movement V/C Ratio	0.12	0.12	0.12	0.02	0.11	0.11	0.06	0.13	0.06	0.09	0.38	0.06
Intersection LOS	C											
Intersection V/C	0.774											

Intersection Level Of Service Report
Intersection 21: Vincent Avenue (NS) at Cypress Street (EW)

Control Type:	Signalized	Delay (sec / veh):	-
Analysis Method:	ICU 1	Level Of Service:	B
Analysis Period:	15 minutes	Volume to Capacity (v/c):	0.653

Intersection Setup

Name	Vincent Avenue			Vincent Avenue			Cypress Street			Cypress Street		
Approach	Northbound			Southbound			Eastbound			Westbound		
Lane Configuration												
Turning Movement	Left	Thru	Right	Left	Thru	Right	Left	Thru	Right	Left	Thru	Right
Lane Width [ft]	12.00	12.00	12.00	12.00	12.00	12.00	12.00	12.00	12.00	12.00	12.00	12.00
No. of Lanes in Pocket	1	0	0	1	0	0	1	0	0	1	0	0
Pocket Length [ft]	120.00	100.00	100.00	120.00	100.00	100.00	100.00	100.00	100.00	150.00	100.00	100.00
Speed [mph]	40.00			45.00			40.00			40.00		
Grade [%]	0.00			0.00			0.00			0.00		
Crosswalk	Yes			Yes			Yes			Yes		

Volumes

Name	Vincent Avenue			Vincent Avenue			Cypress Street			Cypress Street		
Base Volume Input [veh/h]	162	467	125	65	398	71	34	303	50	190	792	78
Base Volume Adjustment Factor	1.0000	1.0000	1.0000	1.0000	1.0000	1.0000	1.0000	1.0000	1.0000	1.0000	1.0000	1.0000
Heavy Vehicles Percentage [%]	2.00	2.00	2.00	2.00	2.00	2.00	2.00	2.00	2.00	2.00	2.00	2.00
Growth Rate	1.01	1.01	1.01	1.01	1.01	1.01	1.01	1.01	1.01	1.01	1.01	1.01
In-Process Volume [veh/h]	0	0	0	0	0	0	0	0	0	0	0	0
Site-Generated Trips [veh/h]	0	50	0	1	15	0	1	0	0	0	0	2
Diverted Trips [veh/h]	0	0	0	0	0	0	0	0	0	0	0	0
Pass-by Trips [veh/h]	0	0	0	0	0	0	0	0	0	0	0	0
Existing Site Adjustment Volume [veh/h]	0	0	0	0	0	0	0	0	0	0	0	0
Other Volume [veh/h]	0	0	0	0	0	0	0	0	0	0	0	0
Total Hourly Volume [veh/h]	164	522	126	67	417	72	35	306	51	192	800	81
Peak Hour Factor	1.0000	1.0000	1.0000	1.0000	1.0000	1.0000	1.0000	1.0000	1.0000	1.0000	1.0000	1.0000
Other Adjustment Factor	1.0000	1.0000	1.0000	1.0000	1.0000	1.0000	1.0000	1.0000	1.0000	1.0000	1.0000	1.0000
Total 15-Minute Volume [veh/h]	41	131	32	17	104	18	9	77	13	48	200	20
Total Analysis Volume [veh/h]	164	522	126	67	417	72	35	306	51	192	800	81
Pedestrian Volume [ped/h]	0			0			0			0		
Bicycle Volume [bicycles/h]	0			0			0			0		

Intersection Settings

Cycle Length [s]	100
Lost time [s]	10.00

Phasing & Timing

Control Type	Permiss	Permiss	Permiss	Permiss	Permiss	Permiss	Permiss	Permiss	Permiss	Permiss	Permiss	Permiss
Signal group	0	2	0	0	6	0	0	8	0	0	4	0
Auxiliary Signal Groups												
Lead / Lag	-	-	-	-	-	-	-	-	-	-	-	-

Movement, Approach, & Intersection Results

V/C, Movement V/C Ratio	0.10	0.20	0.20	0.04	0.15	0.15	0.02	0.11	0.11	0.12	0.28	0.28
Intersection LOS	B											
Intersection V/C	0.653											

Intersection Level Of Service Report

Intersection 22: Vincent Avenue (NS) at San Bernardino Road (EW)

Control Type:	Signalized	Delay (sec / veh):	-
Analysis Method:	ICU 1	Level Of Service:	B
Analysis Period:	15 minutes	Volume to Capacity (v/c):	0.660

Intersection Setup

Name	Vincent Avenue			Vincent Avenue			San Bernardino Road			San Berardino Road		
Approach	Northbound			Southbound			Eastbound			Westbound		
Lane Configuration												
Turning Movement	Left	Thru	Right	Left	Thru	Right	Left	Thru	Right	Left	Thru	Right
Lane Width [ft]	12.00	12.00	12.00	12.00	12.00	12.00	12.00	12.00	12.00	12.00	12.00	12.00
No. of Lanes in Pocket	1	0	0	1	0	0	1	0	0	1	0	0
Pocket Length [ft]	120.00	100.00	100.00	150.00	100.00	100.00	150.00	100.00	100.00	165.00	100.00	100.00
Speed [mph]	35.00			40.00			40.00			40.00		
Grade [%]	0.00			0.00			0.00			0.00		
Crosswalk	Yes			Yes			Yes			Yes		

Volumes

Name	Vincent Avenue			Vincent Avenue			San Bernardino Road			San Berardino Road		
Base Volume Input [veh/h]	106	546	50	70	556	99	82	330	67	99	597	131
Base Volume Adjustment Factor	1.0000	1.0000	1.0000	1.0000	1.0000	1.0000	1.0000	1.0000	1.0000	1.0000	1.0000	1.0000
Heavy Vehicles Percentage [%]	2.00	2.00	2.00	2.00	2.00	2.00	2.00	2.00	2.00	2.00	2.00	2.00
Growth Rate	1.01	1.01	1.01	1.01	1.01	1.01	1.01	1.01	1.01	1.01	1.01	1.01
In-Process Volume [veh/h]	0	0	0	0	0	0	0	0	0	0	0	0
Site-Generated Trips [veh/h]	0	50	0	0	15	0	0	0	0	0	0	0
Diverted Trips [veh/h]	0	0	0	0	0	0	0	0	0	0	0	0
Pass-by Trips [veh/h]	0	0	0	0	0	0	0	0	0	0	0	0
Existing Site Adjustment Volume [veh/h]	0	0	0	0	0	0	0	0	0	0	0	0
Other Volume [veh/h]	0	0	0	0	0	0	0	0	0	0	0	0
Total Hourly Volume [veh/h]	107	601	51	71	577	100	83	333	68	100	603	132
Peak Hour Factor	1.0000	1.0000	1.0000	1.0000	1.0000	1.0000	1.0000	1.0000	1.0000	1.0000	1.0000	1.0000
Other Adjustment Factor	1.0000	1.0000	1.0000	1.0000	1.0000	1.0000	1.0000	1.0000	1.0000	1.0000	1.0000	1.0000
Total 15-Minute Volume [veh/h]	27	150	13	18	144	25	21	83	17	25	151	33
Total Analysis Volume [veh/h]	107	601	51	71	577	100	83	333	68	100	603	132
Pedestrian Volume [ped/h]	0			0			0			0		
Bicycle Volume [bicycles/h]	0			0			0			0		

Intersection Settings

Cycle Length [s]	100
Lost time [s]	10.00

Phasing & Timing

Control Type	Permiss	Permiss	Permiss	Permiss	Permiss	Permiss	Protecte	Permiss	Permiss	Protecte	Permiss	Permiss
Signal group	0	2	0	0	6	0	3	8	0	7	4	0
Auxiliary Signal Groups												
Lead / Lag	-	-	-	-	-	-	Lead	-	-	Lead	-	-

Movement, Approach, & Intersection Results

V/C, Movement V/C Ratio	0.07	0.20	0.20	0.04	0.21	0.21	0.05	0.13	0.13	0.06	0.23	0.23
Intersection LOS	B											
Intersection V/C	0.660											

Intersection Level Of Service Report
Intersection 23: Vincent Avenue (NS) at Badillo Street (EW)

Control Type:	Signalized	Delay (sec / veh):	-
Analysis Method:	ICU 1	Level Of Service:	B
Analysis Period:	15 minutes	Volume to Capacity (v/c):	0.616

Intersection Setup

Name	Vincent Avenue			Vincent Avenue			Dadillo Street			Badillo Street		
Approach	Northbound			Southbound			Eastbound			Westbound		
Lane Configuration												
Turning Movement	Left	Thru	Right	Left	Thru	Right	Left	Thru	Right	Left	Thru	Right
Lane Width [ft]	12.00	12.00	12.00	12.00	12.00	12.00	12.00	12.00	12.00	12.00	12.00	12.00
No. of Lanes in Pocket	1	0	0	1	0	0	1	0	0	1	0	0
Pocket Length [ft]	200.00	100.00	100.00	190.00	100.00	100.00	195.00	100.00	100.00	195.00	100.00	100.00
Speed [mph]	40.00			35.00			45.00			45.00		
Grade [%]	0.00			0.00			0.00			0.00		
Crosswalk	Yes			Yes			Yes			Yes		

Volumes

Name	Vincent Avenue			Vincent Avenue			Dadillo Street			Badillo Street		
Base Volume Input [veh/h]	105	629	177	42	580	121	31	506	113	110	770	88
Base Volume Adjustment Factor	1.0000	1.0000	1.0000	1.0000	1.0000	1.0000	1.0000	1.0000	1.0000	1.0000	1.0000	1.0000
Heavy Vehicles Percentage [%]	2.00	2.00	2.00	2.00	2.00	2.00	2.00	2.00	2.00	2.00	2.00	2.00
Growth Rate	1.01	1.01	1.01	1.01	1.01	1.01	1.01	1.01	1.01	1.01	1.01	1.01
In-Process Volume [veh/h]	0	0	0	0	0	0	0	0	0	0	0	0
Site-Generated Trips [veh/h]	0	33	0	5	10	0	1	0	0	0	0	16
Diverted Trips [veh/h]	0	0	0	0	0	0	0	0	0	0	0	0
Pass-by Trips [veh/h]	0	0	0	0	0	0	0	0	0	0	0	0
Existing Site Adjustment Volume [veh/h]	0	0	0	0	0	0	0	0	0	0	0	0
Other Volume [veh/h]	0	0	0	0	0	0	0	0	0	0	0	0
Total Hourly Volume [veh/h]	106	668	179	47	596	122	32	511	114	111	778	105
Peak Hour Factor	1.0000	1.0000	1.0000	1.0000	1.0000	1.0000	1.0000	1.0000	1.0000	1.0000	1.0000	1.0000
Other Adjustment Factor	1.0000	1.0000	1.0000	1.0000	1.0000	1.0000	1.0000	1.0000	1.0000	1.0000	1.0000	1.0000
Total 15-Minute Volume [veh/h]	27	167	45	12	149	31	8	128	29	28	195	26
Total Analysis Volume [veh/h]	106	668	179	47	596	122	32	511	114	111	778	105
Pedestrian Volume [ped/h]	0			0			0			0		
Bicycle Volume [bicycles/h]	0			0			0			0		

Intersection Settings

Cycle Length [s]	100
Lost time [s]	10.00

Phasing & Timing

Control Type	Protecte	Permiss	Permiss	Protecte	Permiss	Permiss	Protecte	Permiss	Permiss	Protecte	Permiss	Permiss
Signal group	5	2	0	1	6	0	3	8	0	7	4	0
Auxiliary Signal Groups												
Lead / Lag	Lead	-	-	Lead	-	-	Lead	-	-	Lead	-	-

Movement, Approach, & Intersection Results

V/C, Movement V/C Ratio	0.07	0.21	0.11	0.03	0.19	0.08	0.02	0.16	0.07	0.07	0.24	0.07
Intersection LOS	B											
Intersection V/C	0.616											

Intersection Level Of Service Report
Intersection 24: Vincent Avenue (NS) at Puente Avenue (EW)

Control Type:	Signalized	Delay (sec / veh):	-
Analysis Method:	ICU 1	Level Of Service:	A
Analysis Period:	15 minutes	Volume to Capacity (v/c):	0.591

Intersection Setup

Name	Vincent Avenue			Vincent Avenue			Puente Avenue			Puente Avenue		
Approach	Northbound			Southbound			Eastbound			Westbound		
Lane Configuration												
Turning Movement	Left	Thru	Right	Left	Thru	Right	Left	Thru	Right	Left	Thru	Right
Lane Width [ft]	12.00	12.00	12.00	12.00	12.00	12.00	12.00	12.00	12.00	12.00	12.00	12.00
No. of Lanes in Pocket	1	0	0	1	0	0	0	0	0	0	0	0
Pocket Length [ft]	195.00	100.00	100.00	195.00	100.00	100.00	100.00	100.00	100.00	100.00	100.00	100.00
Speed [mph]	40.00			40.00			40.00			40.00		
Grade [%]	0.00			0.00			0.00			0.00		
Crosswalk	Yes			Yes			Yes			Yes		

Volumes

Name	Vincent Avenue			Vincent Avenue			Puente Avenue			Puente Avenue		
Base Volume Input [veh/h]	67	687	31	57	660	69	42	349	66	74	563	96
Base Volume Adjustment Factor	1.0000	1.0000	1.0000	1.0000	1.0000	1.0000	1.0000	1.0000	1.0000	1.0000	1.0000	1.0000
Heavy Vehicles Percentage [%]	2.00	2.00	2.00	2.00	2.00	2.00	2.00	2.00	2.00	2.00	2.00	2.00
Growth Rate	1.01	1.01	1.01	1.01	1.01	1.01	1.01	1.01	1.01	1.01	1.01	1.01
In-Process Volume [veh/h]	0	0	0	0	0	0	0	0	0	0	0	0
Site-Generated Trips [veh/h]	0	33	0	0	10	0	0	0	0	0	0	0
Diverted Trips [veh/h]	0	0	0	0	0	0	0	0	0	0	0	0
Pass-by Trips [veh/h]	0	0	0	0	0	0	0	0	0	0	0	0
Existing Site Adjustment Volume [veh/h]	0	0	0	0	0	0	0	0	0	0	0	0
Other Volume [veh/h]	0	0	0	0	0	0	0	0	0	0	0	0
Total Hourly Volume [veh/h]	68	727	31	58	677	70	42	352	67	75	569	97
Peak Hour Factor	1.0000	1.0000	1.0000	1.0000	1.0000	1.0000	1.0000	1.0000	1.0000	1.0000	1.0000	1.0000
Other Adjustment Factor	1.0000	1.0000	1.0000	1.0000	1.0000	1.0000	1.0000	1.0000	1.0000	1.0000	1.0000	1.0000
Total 15-Minute Volume [veh/h]	17	182	8	15	169	18	11	88	17	19	142	24
Total Analysis Volume [veh/h]	68	727	31	58	677	70	42	352	67	75	569	97
Pedestrian Volume [ped/h]	0			0			0			0		
Bicycle Volume [bicycles/h]	0			0			0			0		

Intersection Settings

Cycle Length [s]	100
Lost time [s]	10.00

Phasing & Timing

Control Type	Permiss	Permiss	Permiss	Permiss	Permiss	Permiss	Permiss	Permiss	Permiss	Permiss	Permiss	Permiss
Signal group	0	2	0	0	6	0	0	8	0	0	4	0
Auxiliary Signal Groups												
Lead / Lag	-	-	-	-	-	-	-	-	-	-	-	-

Movement, Approach, & Intersection Results

V/C, Movement V/C Ratio	0.04	0.23	0.02	0.04	0.21	0.04	0.03	0.12	0.04	0.05	0.20	0.06
Intersection LOS	A											
Intersection V/C	0.591											

Intersection Level Of Service Report
Intersection 25: Vincent Avenue (NS) at Rowland Avenue (EW)

Control Type:	Signalized	Delay (sec / veh):	-
Analysis Method:	ICU 1	Level Of Service:	A
Analysis Period:	15 minutes	Volume to Capacity (v/c):	0.543

Intersection Setup

Name	Vincent Avenue			Vincent Avenue			Rowland Avenue			Rowland Avenue		
Approach	Northbound			Southbound			Eastbound			Westbound		
Lane Configuration												
Turning Movement	Left	Thru	Right	Left	Thru	Right	Left	Thru	Right	Left	Thru	Right
Lane Width [ft]	12.00	12.00	12.00	12.00	12.00	12.00	12.00	12.00	12.00	12.00	12.00	12.00
No. of Lanes in Pocket	1	0	0	1	0	0	0	0	0	0	0	0
Pocket Length [ft]	145.00	100.00	100.00	125.00	100.00	100.00	100.00	100.00	100.00	100.00	100.00	100.00
Speed [mph]	35.00			40.00			35.00			35.00		
Grade [%]	0.00			0.00			0.00			0.00		
Crosswalk	Yes			Yes			Yes			Yes		

Volumes

Name	Vincent Avenue			Vincent Avenue			Rowland Avenue			Rowland Avenue		
Base Volume Input [veh/h]	34	712	55	36	756	12	32	133	41	119	131	62
Base Volume Adjustment Factor	1.0000	1.0000	1.0000	1.0000	1.0000	1.0000	1.0000	1.0000	1.0000	1.0000	1.0000	1.0000
Heavy Vehicles Percentage [%]	2.00	2.00	2.00	2.00	2.00	2.00	2.00	2.00	2.00	2.00	2.00	2.00
Growth Rate	1.01	1.01	1.01	1.01	1.01	1.01	1.01	1.01	1.01	1.01	1.01	1.01
In-Process Volume [veh/h]	0	0	0	0	0	0	0	0	0	0	0	0
Site-Generated Trips [veh/h]	0	21	0	3	6	1	4	0	0	0	0	8
Diverted Trips [veh/h]	0	0	0	0	0	0	0	0	0	0	0	0
Pass-by Trips [veh/h]	0	0	0	0	0	0	0	0	0	0	0	0
Existing Site Adjustment Volume [veh/h]	0	0	0	0	0	0	0	0	0	0	0	0
Other Volume [veh/h]	0	0	0	0	0	0	0	0	0	0	0	0
Total Hourly Volume [veh/h]	34	740	56	39	770	13	36	134	41	120	132	71
Peak Hour Factor	1.0000	1.0000	1.0000	1.0000	1.0000	1.0000	1.0000	1.0000	1.0000	1.0000	1.0000	1.0000
Other Adjustment Factor	1.0000	1.0000	1.0000	1.0000	1.0000	1.0000	1.0000	1.0000	1.0000	1.0000	1.0000	1.0000
Total 15-Minute Volume [veh/h]	9	185	14	10	193	3	9	34	10	30	33	18
Total Analysis Volume [veh/h]	34	740	56	39	770	13	36	134	41	120	132	71
Pedestrian Volume [ped/h]	0			0			0			0		
Bicycle Volume [bicycles/h]	0			0			0			0		

Intersection Settings

Cycle Length [s]	100
Lost time [s]	10.00

Phasing & Timing

Control Type	Protecte	Permiss	Permiss	Protecte	Permiss	Permiss	Permiss	Permiss	Permiss	Permiss	Permiss	Permiss
Signal group	5	2	0	1	6	0	0	8	0	0	4	0
Auxiliary Signal Groups												
Lead / Lag	Lead	-	-	Lead	-	-	-	-	-	-	-	-

Movement, Approach, & Intersection Results

V/C, Movement V/C Ratio	0.02	0.23	0.04	0.02	0.24	0.01	0.02	0.11	0.03	0.08	0.16	0.04
Intersection LOS	A											
Intersection V/C	0.543											

Intersection Level Of Service Report
Intersection 26: Vincent Avenue (NS) at Workman Avenue (EW)

Control Type:	Signalized	Delay (sec / veh):	-
Analysis Method:	ICU 1	Level Of Service:	B
Analysis Period:	15 minutes	Volume to Capacity (v/c):	0.616

Intersection Setup

Name	Vincent Avenue			Vincent Avenue			Workman Avenue			Workman Avenue		
Approach	Northbound			Southbound			Eastbound			Westbound		
Lane Configuration												
Turning Movement	Left	Thru	Right	Left	Thru	Right	Left	Thru	Right	Left	Thru	Right
Lane Width [ft]	12.00	12.00	12.00	12.00	12.00	12.00	12.00	12.00	12.00	12.00	12.00	12.00
No. of Lanes in Pocket	1	0	0	1	0	0	0	0	0	0	0	0
Pocket Length [ft]	120.00	100.00	100.00	180.00	100.00	100.00	100.00	100.00	100.00	100.00	100.00	100.00
Speed [mph]	35.00			40.00			35.00			35.00		
Grade [%]	0.00			0.00			0.00			0.00		
Crosswalk	Yes			Yes			Yes			Yes		

Volumes

Name	Vincent Avenue			Vincent Avenue			Workman Avenue			Workman Avenue		
Base Volume Input [veh/h]	67	675	110	42	816	61	21	137	49	131	188	74
Base Volume Adjustment Factor	1.0000	1.0000	1.0000	1.0000	1.0000	1.0000	1.0000	1.0000	1.0000	1.0000	1.0000	1.0000
Heavy Vehicles Percentage [%]	2.00	2.00	2.00	2.00	2.00	2.00	2.00	2.00	2.00	2.00	2.00	2.00
Growth Rate	1.01	1.01	1.01	1.01	1.01	1.01	1.01	1.01	1.01	1.01	1.01	1.01
In-Process Volume [veh/h]	0	0	0	0	0	0	0	0	0	0	0	0
Site-Generated Trips [veh/h]	0	21	1	0	6	0	0	0	0	0	0	0
Diverted Trips [veh/h]	0	0	0	0	0	0	0	0	0	0	0	0
Pass-by Trips [veh/h]	0	0	0	0	0	0	0	0	0	0	0	0
Existing Site Adjustment Volume [veh/h]	0	0	0	0	0	0	0	0	0	0	0	0
Other Volume [veh/h]	0	0	0	0	0	0	0	0	0	0	0	0
Total Hourly Volume [veh/h]	68	703	112	42	830	62	21	138	49	132	190	75
Peak Hour Factor	1.0000	1.0000	1.0000	1.0000	1.0000	1.0000	1.0000	1.0000	1.0000	1.0000	1.0000	1.0000
Other Adjustment Factor	1.0000	1.0000	1.0000	1.0000	1.0000	1.0000	1.0000	1.0000	1.0000	1.0000	1.0000	1.0000
Total 15-Minute Volume [veh/h]	17	176	28	11	208	16	5	35	12	33	48	19
Total Analysis Volume [veh/h]	68	703	112	42	830	62	21	138	49	132	190	75
Pedestrian Volume [ped/h]	0			0			0			0		
Bicycle Volume [bicycles/h]	0			0			0			0		

Intersection Settings

Cycle Length [s]	100
Lost time [s]	10.00

Phasing & Timing

Control Type	Protecte	Permiss	Permiss	Protecte	Permiss	Permiss	Permiss	Permiss	Permiss	Permiss	Permiss	Permiss
Signal group	5	2	0	1	6	0	0	8	0	0	4	0
Auxiliary Signal Groups												
Lead / Lag	Lead	-	-	Lead	-	-	-	-	-	-	-	-

Movement, Approach, & Intersection Results

V/C, Movement V/C Ratio	0.04	0.22	0.07	0.03	0.26	0.04	0.01	0.10	0.03	0.08	0.20	0.05
Intersection LOS	B											
Intersection V/C	0.616											

Intersection Level Of Service Report
Intersection 27: Vincent Avenue (NS) at I-10 WB Ramps (EW)

Control Type:	Signalized	Delay (sec / veh):	-
Analysis Method:	ICU 1	Level Of Service:	A
Analysis Period:	15 minutes	Volume to Capacity (v/c):	0.446

Intersection Setup

Name	Vincent Avenue		Vincent Avenue		I-10 WB Ramps	
Approach	Northbound		Southbound		Westbound	
Lane Configuration						
Turning Movement	Thru	Right	Left	Thru	Left	Right
Lane Width [ft]	12.00	12.00	12.00	12.00	12.00	12.00
No. of Lanes in Pocket	0	0	0	0	0	1
Pocket Length [ft]	100.00	100.00	100.00	100.00	100.00	220.00
Speed [mph]	35.00		35.00		35.00	
Grade [%]	0.00		0.00		0.00	
Crosswalk	No		No		Yes	

Volumes

Name	Vincent Avenue		Vincent Avenue		I-10 WB Ramps	
Base Volume Input [veh/h]	741	0	0	1011	393	194
Base Volume Adjustment Factor	1.0000	1.0000	1.0000	1.0000	1.0000	1.0000
Heavy Vehicles Percentage [%]	2.00	2.00	2.00	2.00	2.00	2.00
Growth Rate	1.01	1.00	1.00	1.01	1.01	1.01
In-Process Volume [veh/h]	0	0	0	0	0	0
Site-Generated Trips [veh/h]	14	0	0	8	0	15
Diverted Trips [veh/h]	0	0	0	0	0	0
Pass-by Trips [veh/h]	0	0	0	0	0	0
Existing Site Adjustment Volume [veh/h]	0	0	0	0	0	0
Other Volume [veh/h]	0	0	0	0	0	0
Total Hourly Volume [veh/h]	762	0	0	1029	397	211
Peak Hour Factor	1.0000	1.0000	1.0000	1.0000	1.0000	1.0000
Other Adjustment Factor	1.0000	1.0000	1.0000	1.0000	1.0000	1.0000
Total 15-Minute Volume [veh/h]	191	0	0	257	99	53
Total Analysis Volume [veh/h]	762	0	0	1029	397	211
Pedestrian Volume [ped/h]	0		0		0	
Bicycle Volume [bicycles/h]	0		0		0	

Intersection Settings

Cycle Length [s]	100
Lost time [s]	10.00

Phasing & Timing

Control Type	Permissive	Permissive	Permissive	Permissive	Split	Split
Signal group	2	0	0	6	7	0
Auxiliary Signal Groups						
Lead / Lag	-	-	-	-	Lead	-

Movement, Approach, & Intersection Results

V/C, Movement V/C Ratio	0.16	0.00	0.00	0.21	0.12	0.13
Intersection LOS	A					
Intersection V/C	0.446					

Intersection Level Of Service Report
Intersection 28: Vincent Avenue (NS) at I-10 EB Ramps (EW)

Control Type:	Signalized	Delay (sec / veh):	-
Analysis Method:	ICU 1	Level Of Service:	A
Analysis Period:	15 minutes	Volume to Capacity (v/c):	0.493

Intersection Setup

Name	Vincent Avenue			Vincent Avenue			I-10 EB Ramps			I-10 EB Ramps		
Approach	Northbound			Southbound			Eastbound			Westbound		
Lane Configuration												
Turning Movement	Left	Thru	Right	Left	Thru	Right	Left	Thru	Right	Left	Thru	Right
Lane Width [ft]	12.00	12.00	12.00	12.00	12.00	12.00	12.00	12.00	12.00	12.00	12.00	12.00
No. of Lanes in Pocket	0	0	0	0	0	0	0	0	0	0	0	0
Pocket Length [ft]	100.00	100.00	100.00	100.00	100.00	100.00	100.00	100.00	100.00	100.00	100.00	100.00
Speed [mph]	35.00			35.00			35.00			35.00		
Grade [%]	0.00			0.00			0.00			0.00		
Crosswalk	No			No			Yes			Yes		

Volumes

Name	Vincent Avenue			Vincent Avenue			I-10 EB Ramps			I-10 EB Ramps		
Base Volume Input [veh/h]	0	527	656	0	1045	358	217	0	243	0	0	0
Base Volume Adjustment Factor	1.0000	1.0000	1.0000	1.0000	1.0000	1.0000	1.0000	1.0000	1.0000	1.0000	1.0000	1.0000
Heavy Vehicles Percentage [%]	2.00	2.00	2.00	2.00	2.00	2.00	2.00	2.00	2.00	2.00	2.00	2.00
Growth Rate	1.00	1.01	1.01	1.00	1.01	1.01	1.01	1.00	1.01	1.00	1.00	1.00
In-Process Volume [veh/h]	0	0	0	0	0	0	0	0	0	0	0	0
Site-Generated Trips [veh/h]	0	3	0	0	1	5	11	0	0	0	0	0
Diverted Trips [veh/h]	0	0	0	0	0	0	0	0	0	0	0	0
Pass-by Trips [veh/h]	0	0	0	0	0	0	0	0	0	0	0	0
Existing Site Adjustment Volume [veh/h]	0	0	0	0	0	0	0	0	0	0	0	0
Other Volume [veh/h]	0	0	0	0	0	0	0	0	0	0	0	0
Total Hourly Volume [veh/h]	0	535	663	0	1056	367	230	0	245	0	0	0
Peak Hour Factor	1.0000	1.0000	1.0000	1.0000	1.0000	1.0000	1.0000	1.0000	1.0000	1.0000	1.0000	1.0000
Other Adjustment Factor	1.0000	1.0000	1.0000	1.0000	1.0000	1.0000	1.0000	1.0000	1.0000	1.0000	1.0000	1.0000
Total 15-Minute Volume [veh/h]	0	134	166	0	264	92	58	0	61	0	0	0
Total Analysis Volume [veh/h]	0	535	663	0	1056	367	230	0	245	0	0	0
Pedestrian Volume [ped/h]	0			0			0			0		
Bicycle Volume [bicycles/h]	0			0			0			0		

Intersection Settings

Cycle Length [s]	100
Lost time [s]	10.00

Phasing & Timing

Control Type	Permiss	Permiss	Permiss	Permiss	Permiss	Permiss	Split	Permiss	Split	Permiss	Permiss	Permiss
Signal group	0	2	0	0	6	0	3	0	0	0	0	0
Auxiliary Signal Groups												
Lead / Lag	-	-	-	-	-	-	Lead	-	-	-	-	-

Movement, Approach, & Intersection Results

V/C, Movement V/C Ratio	0.00	0.25	0.25	0.00	0.22	0.23	0.14	0.00	0.08	0.00	0.00	0.00
Intersection LOS	A											
Intersection V/C	0.493											

Intersection Level Of Service Report

Intersection 29: Vernon Ave/Lark Ellen Ave (NS) at Gladstone Street (EW)

Control Type:	Signalized	Delay (sec / veh):	-
Analysis Method:	ICU 1	Level Of Service:	B
Analysis Period:	15 minutes	Volume to Capacity (v/c):	0.698

Intersection Setup

Name	Lark Ellen Avenue			Vernon Avenue			Gladstone Street			Gladstone Street		
Approach	Northbound			Southbound			Eastbound			Westbound		
Lane Configuration												
Turning Movement	Left	Thru	Right	Left	Thru	Right	Left	Thru	Right	Left	Thru	Right
Lane Width [ft]	12.00	12.00	12.00	12.00	12.00	12.00	12.00	12.00	12.00	12.00	12.00	12.00
No. of Lanes in Pocket	1	0	0	1	0	0	1	0	0	1	0	0
Pocket Length [ft]	60.00	100.00	100.00	60.00	100.00	100.00	70.00	100.00	100.00	60.00	100.00	100.00
Speed [mph]	35.00			35.00			45.00			45.00		
Grade [%]	0.00			0.00			0.00			0.00		
Crosswalk	Yes			Yes			Yes			Yes		

Volumes

Name	Lark Ellen Avenue			Vernon Avenue			Gladstone Street			Gladstone Street		
Base Volume Input [veh/h]	76	423	178	23	426	88	51	198	32	150	825	39
Base Volume Adjustment Factor	1.0000	1.0000	1.0000	1.0000	1.0000	1.0000	1.0000	1.0000	1.0000	1.0000	1.0000	1.0000
Heavy Vehicles Percentage [%]	2.00	2.00	2.00	2.00	2.00	2.00	2.00	2.00	2.00	2.00	2.00	2.00
Growth Rate	1.01	1.01	1.01	1.01	1.01	1.01	1.01	1.01	1.01	1.01	1.01	1.01
In-Process Volume [veh/h]	0	0	0	0	0	0	0	0	0	0	0	0
Site-Generated Trips [veh/h]	0	0	0	0	0	0	0	8	0	0	39	0
Diverted Trips [veh/h]	0	0	0	0	0	0	0	0	0	0	0	0
Pass-by Trips [veh/h]	0	0	0	0	0	0	0	0	0	0	0	0
Existing Site Adjustment Volume [veh/h]	0	0	0	0	0	0	0	0	0	0	0	0
Other Volume [veh/h]	0	0	0	0	0	0	0	0	0	0	0	0
Total Hourly Volume [veh/h]	77	427	180	23	430	89	52	208	32	152	872	39
Peak Hour Factor	1.0000	1.0000	1.0000	1.0000	1.0000	1.0000	1.0000	1.0000	1.0000	1.0000	1.0000	1.0000
Other Adjustment Factor	1.0000	1.0000	1.0000	1.0000	1.0000	1.0000	1.0000	1.0000	1.0000	1.0000	1.0000	1.0000
Total 15-Minute Volume [veh/h]	19	107	45	6	108	22	13	52	8	38	218	10
Total Analysis Volume [veh/h]	77	427	180	23	430	89	52	208	32	152	872	39
Pedestrian Volume [ped/h]	0			0			0			0		
Bicycle Volume [bicycles/h]	0			0			0			0		

Intersection Settings

Cycle Length [s]	100
Lost time [s]	10.00

Phasing & Timing

Control Type	Permiss	Permiss	Permiss	Permiss	Permiss	Permiss	Permiss	Permiss	Permiss	Permiss	Permiss	Permiss
Signal group	0	2	0	0	6	0	0	8	0	0	4	0
Auxiliary Signal Groups												
Lead / Lag	-	-	-	-	-	-	-	-	-	-	-	-

Movement, Approach, & Intersection Results

V/C, Movement V/C Ratio	0.05	0.27	0.11	0.01	0.16	0.16	0.03	0.08	0.08	0.10	0.28	0.28
Intersection LOS	B											
Intersection V/C	0.698											

Intersection Level Of Service Report
Intersection 30: Azusa Avenue (NS) at I-210 EB Ramps (EW)

Control Type:	Signalized	Delay (sec / veh):	-
Analysis Method:	ICU 1	Level Of Service:	B
Analysis Period:	15 minutes	Volume to Capacity (v/c):	0.686

Intersection Setup

Name	Azusa Avenue		Azusa Avenue		I-210 EB Ramps	
Approach	Northbound		Southbound		Eastbound	
Lane Configuration						
Turning Movement	Left	Thru	Thru	Right	Left	Right
Lane Width [ft]	12.00	12.00	12.00	12.00	12.00	12.00
No. of Lanes in Pocket	0	0	0	0	0	0
Pocket Length [ft]	100.00	100.00	100.00	100.00	100.00	100.00
Speed [mph]	35.00		35.00		35.00	
Grade [%]	0.00		0.00		0.00	
Crosswalk	No		No		Yes	

Volumes

Name	Azusa Avenue		Azusa Avenue		I-210 EB Ramps	
Base Volume Input [veh/h]	0	1128	627	0	193	331
Base Volume Adjustment Factor	1.0000	1.0000	1.0000	1.0000	1.0000	1.0000
Heavy Vehicles Percentage [%]	2.00	2.00	2.00	2.00	2.00	2.00
Growth Rate	1.00	1.01	1.01	1.00	1.01	1.01
In-Process Volume [veh/h]	0	0	0	0	0	0
Site-Generated Trips [veh/h]	0	44	58	0	7	12
Diverted Trips [veh/h]	0	0	0	0	0	0
Pass-by Trips [veh/h]	0	0	0	0	0	0
Existing Site Adjustment Volume [veh/h]	0	0	0	0	0	0
Other Volume [veh/h]	0	0	0	0	0	0
Total Hourly Volume [veh/h]	0	1183	691	0	202	346
Peak Hour Factor	1.0000	1.0000	1.0000	1.0000	1.0000	1.0000
Other Adjustment Factor	1.0000	1.0000	1.0000	1.0000	1.0000	1.0000
Total 15-Minute Volume [veh/h]	0	296	173	0	51	87
Total Analysis Volume [veh/h]	0	1183	691	0	202	346
Pedestrian Volume [ped/h]	0		0		0	
Bicycle Volume [bicycles/h]	0		0		0	

Intersection Settings

Cycle Length [s]	100
Lost time [s]	10.00

Phasing & Timing

Control Type	Permissive	Permissive	Permissive	Permissive	Split	Split
Signal group	0	2	6	0	3	0
Auxiliary Signal Groups						
Lead / Lag	-	-	-	-	Lead	-

Movement, Approach, & Intersection Results

V/C, Movement V/C Ratio	0.00	0.37	0.22	0.00	0.06	0.22
Intersection LOS	B					
Intersection V/C	0.686					

Intersection Level Of Service Report

Intersection 31: Azusa Avenue (NS) at Paramount Street (EW)

Control Type:	Signalized	Delay (sec / veh):	-
Analysis Method:	ICU 1	Level Of Service:	B
Analysis Period:	15 minutes	Volume to Capacity (v/c):	0.629

Intersection Setup

Name	Azusa Avenue			Azusa Avenue			Paramount Street			Paramount Street		
Approach	Northbound			Southbound			Eastbound			Westbound		
Lane Configuration												
Turning Movement	Left	Thru	Right	Left	Thru	Right	Left	Thru	Right	Left	Thru	Right
Lane Width [ft]	12.00	12.00	12.00	12.00	12.00	12.00	12.00	12.00	12.00	12.00	12.00	12.00
No. of Lanes in Pocket	1	0	0	1	0	0	0	0	0	0	0	0
Pocket Length [ft]	200.00	100.00	100.00	110.00	100.00	100.00	100.00	100.00	100.00	100.00	100.00	100.00
Speed [mph]	35.00			35.00			25.00			15.00		
Grade [%]	0.00			0.00			0.00			0.00		
Crosswalk	No			Yes			Yes			Yes		

Volumes

Name	Azusa Avenue			Azusa Avenue			Paramount Street			Paramount Street		
Base Volume Input [veh/h]	127	936	0	11	819	75	162	0	79	2	0	8
Base Volume Adjustment Factor	1.0000	1.0000	1.0000	1.0000	1.0000	1.0000	1.0000	1.0000	1.0000	1.0000	1.0000	1.0000
Heavy Vehicles Percentage [%]	2.00	2.00	2.00	2.00	2.00	2.00	2.00	2.00	2.00	2.00	2.00	2.00
Growth Rate	1.01	1.01	1.01	1.01	1.01	1.01	1.01	1.01	1.01	1.01	1.01	1.01
In-Process Volume [veh/h]	0	0	0	0	0	0	0	0	0	0	0	0
Site-Generated Trips [veh/h]	6	23	0	0	53	0	27	0	0	0	0	0
Diverted Trips [veh/h]	0	0	0	0	0	0	0	0	0	0	0	0
Pass-by Trips [veh/h]	0	0	0	0	0	0	0	0	0	0	0	0
Existing Site Adjustment Volume [veh/h]	0	0	0	0	0	0	0	0	0	0	0	0
Other Volume [veh/h]	0	0	0	0	0	0	0	0	0	0	0	0
Total Hourly Volume [veh/h]	134	968	0	11	880	76	191	0	80	2	0	8
Peak Hour Factor	1.0000	1.0000	1.0000	1.0000	1.0000	1.0000	1.0000	1.0000	1.0000	1.0000	1.0000	1.0000
Other Adjustment Factor	1.0000	1.0000	1.0000	1.0000	1.0000	1.0000	1.0000	1.0000	1.0000	1.0000	1.0000	1.0000
Total 15-Minute Volume [veh/h]	34	242	0	3	220	19	48	0	20	1	0	2
Total Analysis Volume [veh/h]	134	968	0	11	880	76	191	0	80	2	0	8
Pedestrian Volume [ped/h]	0			0			0			0		
Bicycle Volume [bicycles/h]	0			0			0			0		

Intersection Settings

Cycle Length [s]	100
Lost time [s]	10.00

Phasing & Timing

Control Type	Permiss	Permiss	Permiss	Permiss	Permiss	Permiss	Permiss	Permiss	Permiss	Permiss	Permiss	Permiss
Signal group	0	2	0	0	6	0	0	8	0	0	4	0
Auxiliary Signal Groups												
Lead / Lag	-	-	-	-	-	-	-	-	-	-	-	-

Movement, Approach, & Intersection Results

V/C, Movement V/C Ratio	0.08	0.30	0.00	0.01	0.28	0.05	0.12	0.00	0.17	0.00	0.00	0.01
Intersection LOS	B											
Intersection V/C	0.629											

Intersection Level Of Service Report

Intersection 32: Azusa Avenue (NS) at Gladstone Street (EW)

Control Type:	Signalized	Delay (sec / veh):	-
Analysis Method:	ICU 1	Level Of Service:	C
Analysis Period:	15 minutes	Volume to Capacity (v/c):	0.758

Intersection Setup

Name	Azusa Avenue			Azusa Avenue			Gladstone Street			Gladstone Street		
Approach	Northbound			Southbound			Eastbound			Westbound		
Lane Configuration												
Turning Movement	Left	Thru	Right	Left	Thru	Right	Left	Thru	Right	Left	Thru	Right
Lane Width [ft]	12.00	12.00	12.00	12.00	12.00	12.00	12.00	12.00	12.00	12.00	12.00	12.00
No. of Lanes in Pocket	1	0	1	2	0	0	1	0	0	1	0	0
Pocket Length [ft]	190.00	100.00	190.00	190.00	100.00	100.00	150.00	100.00	100.00	150.00	100.00	100.00
Speed [mph]	35.00			35.00			40.00			40.00		
Grade [%]	0.00			0.00			0.00			0.00		
Crosswalk	Yes			Yes			Yes			Yes		

Volumes

Name	Azusa Avenue			Azusa Avenue			Gladstone Street			Gladstone Street		
Base Volume Input [veh/h]	113	668	64	119	631	82	117	243	41	139	738	93
Base Volume Adjustment Factor	1.0000	1.0000	1.0000	1.0000	1.0000	1.0000	1.0000	1.0000	1.0000	1.0000	1.0000	1.0000
Heavy Vehicles Percentage [%]	2.00	2.00	2.00	2.00	2.00	2.00	2.00	2.00	2.00	2.00	2.00	2.00
Growth Rate	1.01	1.01	1.01	1.01	1.01	1.01	1.01	1.01	1.01	1.01	1.01	1.01
In-Process Volume [veh/h]	0	0	0	0	0	0	0	0	0	0	0	0
Site-Generated Trips [veh/h]	3	11	1	12	15	26	6	2	0	1	10	12
Diverted Trips [veh/h]	0	0	0	0	0	0	0	0	0	0	0	0
Pass-by Trips [veh/h]	0	0	0	0	0	0	0	0	0	0	0	0
Existing Site Adjustment Volume [veh/h]	0	0	0	0	0	0	0	0	0	0	0	0
Other Volume [veh/h]	0	0	0	0	0	0	0	0	0	0	0	0
Total Hourly Volume [veh/h]	117	686	66	132	652	109	124	247	41	141	755	106
Peak Hour Factor	1.0000	1.0000	1.0000	1.0000	1.0000	1.0000	1.0000	1.0000	1.0000	1.0000	1.0000	1.0000
Other Adjustment Factor	1.0000	1.0000	1.0000	1.0000	1.0000	1.0000	1.0000	1.0000	1.0000	1.0000	1.0000	1.0000
Total 15-Minute Volume [veh/h]	29	172	17	33	163	27	31	62	10	35	189	27
Total Analysis Volume [veh/h]	117	686	66	132	652	109	124	247	41	141	755	106
Pedestrian Volume [ped/h]	0			0			0			0		
Bicycle Volume [bicycles/h]	0			0			0			0		

Intersection Settings

Cycle Length [s]	100
Lost time [s]	10.00

Phasing & Timing

Control Type	Protecte	Permiss	Overlap	Protecte	Permiss	Permiss	Protecte	Permiss	Permiss	Protecte	Permiss	Permiss
Signal group	5	2	2	1	6	0	3	8	0	7	4	0
Auxiliary Signal Groups			2,7									
Lead / Lag	Lead	-	-	Lead	-	-	Lead	-	-	Lead	-	-

Movement, Approach, & Intersection Results

V/C, Movement V/C Ratio	0.07	0.21	0.00	0.04	0.24	0.24	0.08	0.09	0.09	0.09	0.27	0.27
Intersection LOS	C											
Intersection V/C	0.758											

Intersection Level Of Service Report
Intersection 33: San Gabriel Ave/Azusa Ave (NS) at 1st St (EW)

Control Type:	Signalized	Delay (sec / veh):	-
Analysis Method:	ICU 1	Level Of Service:	C
Analysis Period:	15 minutes	Volume to Capacity (v/c):	0.704

Intersection Setup

Name												
Approach	Northbound			Southbound			Eastbound			Westbound		
Lane Configuration												
Turning Movement	Left	Thru	Right	Left	Thru	Right	Left	Thru	Right	Left	Thru	Right
Lane Width [ft]	12.00	12.00	12.00	12.00	12.00	12.00	12.00	12.00	12.00	12.00	12.00	12.00
No. of Lanes in Pocket	0	0	0	0	0	0	0	0	0	0	0	0
Pocket Length [ft]	100.00	100.00	100.00	100.00	100.00	100.00	100.00	100.00	100.00	100.00	100.00	100.00
Speed [mph]	35.00			35.00			35.00			35.00		
Grade [%]	0.00			0.00			0.00			0.00		
Crosswalk	No			Yes			Yes			Yes		

Volumes

Name												
Base Volume Input [veh/h]	86	516	410	72	826	31	38	82	76	369	252	161
Base Volume Adjustment Factor	1.0000	1.0000	1.0000	1.0000	1.0000	1.0000	1.0000	1.0000	1.0000	1.0000	1.0000	1.0000
Heavy Vehicles Percentage [%]	2.00	2.00	2.00	2.00	2.00	2.00	2.00	2.00	2.00	2.00	2.00	2.00
Growth Rate	1.06	1.06	1.06	1.06	1.06	1.06	1.06	1.06	1.06	1.06	1.06	1.06
In-Process Volume [veh/h]	0	0	0	0	0	0	0	0	0	0	0	0
Site-Generated Trips [veh/h]	0	23	14	13	51	0	0	0	0	34	0	14
Diverted Trips [veh/h]	0	0	0	0	0	0	0	0	0	0	0	0
Pass-by Trips [veh/h]	0	0	0	0	0	0	0	0	0	0	0	0
Existing Site Adjustment Volume [veh/h]	0	0	0	0	0	0	0	0	0	0	0	0
Other Volume [veh/h]	0	0	0	0	0	0	0	0	0	0	0	0
Total Hourly Volume [veh/h]	91	570	449	89	927	33	40	87	81	425	267	185
Peak Hour Factor	0.9080	0.9080	0.9080	0.9080	0.9080	0.9080	0.9080	0.9080	0.9080	0.9080	0.9080	0.9080
Other Adjustment Factor	1.0000	1.0000	1.0000	1.0000	1.0000	1.0000	1.0000	1.0000	1.0000	1.0000	1.0000	1.0000
Total 15-Minute Volume [veh/h]	25	157	124	25	255	9	11	24	22	117	74	51
Total Analysis Volume [veh/h]	100	628	494	98	1021	36	44	96	89	468	294	204
Pedestrian Volume [ped/h]	0			0			0			0		
Bicycle Volume [bicycles/h]	0			0			0			0		

Intersection Settings

Cycle Length [s]	100
Lost time [s]	10.00

Phasing & Timing

Control Type	Protecte	Permiss	Permiss	Protecte	Permiss	Permiss	Protecte	Permiss	Permiss	Protecte	Permiss	Permiss
Signal group	5	2	0	1	6	0	3	8	0	7	4	0
Auxiliary Signal Groups												
Lead / Lag	Lead	-	-	Lead	-	-	Lead	-	-	Lead	-	-

Movement, Approach, & Intersection Results

V/C, Movement V/C Ratio	0.06	0.20	0.31	0.06	0.32	0.02	0.03	0.06	0.06	0.15	0.16	0.16
Intersection LOS	C											
Intersection V/C	0.704											

Intersection Level Of Service Report
Intersection 34: Alameda Ave/I-210 WB Ramps NS) at 1st St (EW)

Control Type:	Signalized	Delay (sec / veh):	-
Analysis Method:	ICU 1	Level Of Service:	E
Analysis Period:	15 minutes	Volume to Capacity (v/c):	0.962

Intersection Setup

Name												
Approach	Northbound			Southbound			Eastbound			Westbound		
Lane Configuration												
Turning Movement	Left	Thru	Right	Left	Thru	Right	Left	Thru	Right	Left	Thru	Right
Lane Width [ft]	12.00	12.00	12.00	12.00	12.00	12.00	12.00	12.00	12.00	12.00	12.00	12.00
No. of Lanes in Pocket	1	0	0	1	0	1	1	0	1	1	0	1
Pocket Length [ft]	325.00	100.00	100.00	50.00	100.00	150.00	55.00	100.00	100.00	100.00	100.00	110.00
Speed [mph]	35.00			35.00			35.00			35.00		
Grade [%]	0.00			0.00			0.00			0.00		
Crosswalk	Yes			Yes			Yes			Yes		

Volumes

Name												
Base Volume Input [veh/h]	111	14	7	41	112	64	8	239	388	580	465	44
Base Volume Adjustment Factor	1.0000	1.0000	1.0000	1.0000	1.0000	1.0000	1.0000	1.0000	1.0000	1.0000	1.0000	1.0000
Heavy Vehicles Percentage [%]	2.00	2.00	2.00	2.00	2.00	2.00	2.00	2.00	2.00	2.00	2.00	2.00
Growth Rate	1.02	1.02	1.02	1.02	1.02	1.02	1.02	1.02	1.02	1.02	1.02	1.02
In-Process Volume [veh/h]	0	0	0	0	0	0	0	0	0	0	0	0
Site-Generated Trips [veh/h]	48	0	0	0	0	0	0	0	27	0	0	0
Diverted Trips [veh/h]	0	0	0	0	0	0	0	0	0	0	0	0
Pass-by Trips [veh/h]	0	0	0	0	0	0	0	0	0	0	0	0
Existing Site Adjustment Volume [veh/h]	0	0	0	0	0	0	0	0	0	0	0	0
Other Volume [veh/h]	0	0	0	0	0	0	0	0	0	0	0	0
Total Hourly Volume [veh/h]	161	14	7	42	114	65	8	244	423	592	474	45
Peak Hour Factor	0.9350	0.9350	0.9350	0.9350	0.9350	0.9350	0.9350	0.9350	0.9350	0.9350	0.9350	0.9350
Other Adjustment Factor	1.0000	1.0000	1.0000	1.0000	1.0000	1.0000	1.0000	1.0000	1.0000	1.0000	1.0000	1.0000
Total 15-Minute Volume [veh/h]	43	4	2	11	30	17	2	65	113	158	127	12
Total Analysis Volume [veh/h]	172	15	7	45	122	70	9	261	452	633	507	48
Pedestrian Volume [ped/h]	0			0			0			0		
Bicycle Volume [bicycles/h]	0			0			0			0		

Intersection Settings

Cycle Length [s]	100
Lost time [s]	10.00

Phasing & Timing

Control Type	Permiss	Permiss	Permiss	Permiss	Permiss	Permiss	Permiss	Permiss	Permiss	Permiss	Permiss	Permiss
Signal group	0	2	0	0	6	0	0	8	0	0	4	0
Auxiliary Signal Groups												
Lead / Lag	-	-	-	-	-	-	-	-	-	-	-	-

Movement, Approach, & Intersection Results

V/C, Movement V/C Ratio	0.11	0.01	0.01	0.03	0.08	0.04	0.01	0.08	0.28	0.40	0.32	0.03
Intersection LOS	E											
Intersection V/C	0.962											

Vincent Avenue Industrial Building

Vistro File: G:\...\PMC.vistro
Report File: G:\...\FBC PM.pdf

Scenario 3 Future Baseline Plus Cumulative Without Project
5/6/2020

Intersection Analysis Summary

ID	Intersection Name	Control Type	Method	Worst Mvmt	V/C	Delay (s/veh)	LOS
1	I-605 SB On Ramp (NS) at Live Oak Avenue (EW)	Signalized	ICU 1	WB Left	0.980	-	E
2	I-605 NB Ramps (NS) at Live Oak Avenue (EW)	Two-way stop	HCM 6th Edition	NB Right	1.818	397.4	F
3	Graham Road (NS) at Live Oak Avenue (EW)	Signalized	ICU 1	WB Thru	0.682	-	B
4	Rivergrade Road (NS) at Live Oak Avenue (EW)	Signalized	ICU 1	EB Thru	0.924	-	E
5	Stewart Avenue (NS) at Live Oak Avenue (EW)	Signalized	ICU 1	EB Thru	0.806	-	D
6	Baldwin Park Boulevard (NS) at Live Oak Avenue (EW)	Signalized	ICU 1	EB Thru	0.743	-	C
7	Arrow Highway (NS) at Live Oak Ave/Arrow Hwy (EW)	Signalized	ICU 1	EB Thru	0.940	-	E
8	Maine Avenue (NS) at Arrow Highway (EW)	Signalized	ICU 1	EB Thru	0.857	-	D
9	Santa Fe Dam/Azusa Canyon Road (NS) at Arrow Highway (EW)	Signalized	ICU 1	EB Thru	0.943	-	E
10	4th Street (NS) at Arrow Highway (EW)	Signalized	ICU 1	EB Thru	0.576	-	A
11	Irwindale Avenue (NS) at I-210 WB Ramps (EW)	Signalized	ICU 1	SB Thru	0.699	-	B
12	Irwindale Avenue (NS) at I-210 EB Ramps (EW)	Signalized	ICU 1	NB Thru	0.889	-	D
13	Irwindale Avenue (NS) at Jardin De Roca/Irwindale Rd (EW)	Signalized	ICU 1	NB Thru	0.811	-	D
14	Irwindale Avenue (NS) at 1st Street (EW)	Signalized	ICU 1	NB Thru	0.485	-	A
15	Irwindale Avenue (NS) at Gladstone Street (EW)	Signalized	ICU 1	SB Thru	0.678	-	B
16	Irwindale Avenue (NS) at Arrow Highway (EW)	Signalized	ICU 1	EB Right	0.792	-	C
17	Vincent Avenue (NS) at	Signalized	ICU 1	EB Right	0.869		D

17	Gladstone Street (EW)	Signalized	ICU 1	EB Right	0.809	-	D
18	Vincent Avenue (NS) at Arrow Highway (EW)	Signalized	ICU 1	EB Thru	0.825	-	D
21	Vincent Avenue (NS) at Cypress Street (EW)	Signalized	ICU 1	EB Thru	0.734	-	C
22	Vincent Avenue (NS) at San Bernardino Road (EW)	Signalized	ICU 1	EB Right	0.674	-	B
23	Vincent Avenue (NS) at Badillo Street (EW)	Signalized	ICU 1	EB Thru	0.773	-	C
24	Vincent Avenue (NS) at Puente Avenue (EW)	Signalized	ICU 1	SB Thru	0.643	-	B
25	Vincent Avenue (NS) at Rowland Avenue (EW)	Signalized	ICU 1	SB Thru	0.618	-	B
26	Vincent Avenue (NS) at Workman Avenue (EW)	Signalized	ICU 1	NB Thru	0.693	-	B
27	Vincent Avenue (NS) at I-10 WB Ramps (EW)	Signalized	ICU 1	SB Thru	0.457	-	A
28	Vincent Avenue (NS) at I-10 EB Ramps (EW)	Signalized	ICU 1	NB Right	0.545	-	A
29	Vernon Ave/Lark Ellen Ave (NS) at Gladstone Street (EW)	Signalized	ICU 1	EB Right	0.742	-	C
30	Azusa Avenue (NS) at I-210 EB Ramps (EW)	Signalized	ICU 1	NB Thru	0.688	-	B
31	Azusa Avenue (NS) at Paramount Street (EW)	Signalized	ICU 1	SB Thru	0.668	-	B
32	Azusa Avenue (NS) at Gladstone Street (EW)	Signalized	ICU 1	EB Thru	0.749	-	C
33	San Gabriel Ave/Azusa Ave (NS) at 1st St (EW)	Signalized	ICU 1	SB Thru	0.691	-	B
34	Alameda Ave/I-210 WB Ramps (NS) at 1st St (EW)	Signalized	ICU 1	NB Left	0.734	-	C

V/C, Delay, LOS: For two-way stop, these values are taken from the movement with the worst (highest) delay value. For all other control types, they are taken for the whole intersection.

Intersection Level Of Service Report
Intersection 1: I-605 SB On Ramp (NS) at Live Oak Avenue (EW)

Control Type:	Signalized	Delay (sec / veh):	-
Analysis Method:	ICU 1	Level Of Service:	E
Analysis Period:	15 minutes	Volume to Capacity (v/c):	0.980

Intersection Setup

Name	I-605 SB On Ramps				Live Oak Avenue	
Approach	Northbound		Eastbound		Westbound	
Lane Configuration						
Turning Movement	Left	Right	Thru	Right	Left	Thru
Lane Width [ft]	12.00	12.00	12.00	12.00	12.00	12.00
No. of Lanes in Pocket	0	0	0	0	1	0
Pocket Length [ft]	100.00	100.00	100.00	100.00	365.00	100.00
Speed [mph]	35.00		35.00		45.00	
Grade [%]	0.00		0.00		0.00	
Crosswalk	Yes		No		No	

Volumes

Name	I-605 SB On Ramps				Live Oak Avenue	
Base Volume Input [veh/h]	0	0	1049	1114	557	884
Base Volume Adjustment Factor	1.0000	1.0000	1.0000	0.0000	1.0000	1.0000
Heavy Vehicles Percentage [%]	2.00	2.00	2.00	2.00	2.00	2.00
Growth Rate	1.00	1.00	1.01	1.01	1.01	1.01
In-Process Volume [veh/h]	0	0	0	0	0	0
Site-Generated Trips [veh/h]	0	0	133	504	249	282
Diverted Trips [veh/h]	0	0	0	0	0	0
Pass-by Trips [veh/h]	0	0	0	0	0	0
Existing Site Adjustment Volume [veh/h]	0	0	0	0	0	0
Other Volume [veh/h]	0	0	0	0	0	0
Total Hourly Volume [veh/h]	0	0	1192	504	812	1175
Peak Hour Factor	1.0000	1.0000	1.0000	1.0000	1.0000	1.0000
Other Adjustment Factor	1.0000	1.0000	1.0000	0.0000	1.0000	1.0000
Total 15-Minute Volume [veh/h]	0	0	298	0	203	294
Total Analysis Volume [veh/h]	0	0	1192	0	812	1175
Pedestrian Volume [ped/h]	0		0		0	
Bicycle Volume [bicycles/h]	0		0		0	

Intersection Settings

Cycle Length [s]	100
Lost time [s]	10.00

Phasing & Timing

Control Type	Permissive	Permissive	Permissive	Permissive	Protected	Permissive
Signal group	0	0	2	0	1	6
Auxiliary Signal Groups						
Lead / Lag	-	-	-	-	Lead	-

Movement, Approach, & Intersection Results

V/C, Movement V/C Ratio	0.00	0.00	0.37	0.00	0.51	0.37
Intersection LOS	E					
Intersection V/C	0.980					

Intersection Level Of Service Report
Intersection 2: I-605 NB Ramps (NS) at Live Oak Avenue (EW)

Control Type:	Two-way stop	Delay (sec / veh):	397.4
Analysis Method:	HCM 6th Edition	Level Of Service:	F
Analysis Period:	15 minutes	Volume to Capacity (v/c):	1.818

Intersection Setup

Name	I-605 NB Ramps			I-605 NB Ramps			Live Oak Avenue			Live Oak Avenue		
Approach	Northbound			Southbound			Eastbound			Westbound		
Lane Configuration												
Turning Movement	Left	Thru	Right	Left	Thru	Right	Left	Thru	Right	Left	Thru	Right
Lane Width [ft]	12.00	12.00	12.00	12.00	12.00	12.00	12.00	12.00	12.00	12.00	12.00	12.00
No. of Lanes in Pocket	0	0	0	0	0	0	0	0	0	0	0	0
Pocket Length [ft]	100.00	100.00	100.00	100.00	100.00	100.00	100.00	100.00	100.00	100.00	100.00	100.00
Speed [mph]	35.00			35.00			45.00			45.00		
Grade [%]	0.00			0.00			0.00			0.00		
Crosswalk	Yes			Yes			No			No		

Volumes

Name	I-605 NB Ramps			I-605 NB Ramps			Live Oak Avenue			Live Oak Avenue		
Base Volume Input [veh/h]	0	0	621	0	0	523	0	1012	0	0	944	0
Base Volume Adjustment Factor	1.0000	1.0000	1.0000	1.0000	1.0000	1.0000	1.0000	1.0000	1.0000	1.0000	1.0000	1.0000
Heavy Vehicles Percentage [%]	2.00	2.00	2.00	2.00	2.00	2.00	2.00	2.00	2.00	2.00	2.00	2.00
Growth Rate	1.00	1.00	1.01	1.00	1.00	1.01	1.00	1.01	1.00	1.00	1.01	1.00
In-Process Volume [veh/h]	0	0	0	0	0	0	0	0	0	0	0	0
Site-Generated Trips [veh/h]	0	0	208	0	0	170	0	133	0	0	361	0
Diverted Trips [veh/h]	0	0	0	0	0	0	0	0	0	0	0	0
Pass-by Trips [veh/h]	0	0	0	0	0	0	0	0	0	0	0	0
Existing Site Adjustment Volume [veh/h]	0	0	0	0	0	0	0	0	0	0	0	0
Other Volume [veh/h]	0	0	0	0	0	0	0	0	0	0	0	0
Total Hourly Volume [veh/h]	0	0	835	0	0	698	0	1155	0	0	1314	0
Peak Hour Factor	1.0000	1.0000	1.0000	1.0000	1.0000	1.0000	1.0000	1.0000	1.0000	1.0000	1.0000	1.0000
Other Adjustment Factor	1.0000	1.0000	1.0000	1.0000	1.0000	1.0000	1.0000	1.0000	1.0000	1.0000	1.0000	1.0000
Total 15-Minute Volume [veh/h]	0	0	209	0	0	175	0	289	0	0	329	0
Total Analysis Volume [veh/h]	0	0	835	0	0	698	0	1155	0	0	1314	0
Pedestrian Volume [ped/h]	0			0			0			0		

Intersection Settings

Priority Scheme	Stop	Stop	Free	Free
Flared Lane				
Storage Area [veh]	0	0	0	0
Two-Stage Gap Acceptance	No	No		
Number of Storage Spaces in Median	0	0	0	0

Movement, Approach, & Intersection Results

V/C, Movement V/C Ratio	0.00	0.00	1.82	0.00	0.00	1.71	0.00	0.01	0.00	0.00	0.01	0.00
d_M, Delay for Movement [s/veh]	0.00	0.00	397.41	0.00	0.00	354.74	0.00	0.00	0.00	0.00	0.00	0.00
Movement LOS			F			F		A			A	
95th-Percentile Queue Length [veh/ln]	0.00	0.00	52.87	0.00	0.00	42.48	0.00	0.00	0.00	0.00	0.00	0.00
95th-Percentile Queue Length [ft/ln]	0.00	0.00	1321.79	0.00	0.00	1062.06	0.00	0.00	0.00	0.00	0.00	0.00
d_A, Approach Delay [s/veh]	397.41			354.74			0.00			0.00		
Approach LOS	F			F			A			A		
d_I, Intersection Delay [s/veh]	144.79											
Intersection LOS	F											

Intersection Level Of Service Report
Intersection 3: Graham Road (NS) at Live Oak Avenue (EW)

Control Type:	Signalized	Delay (sec / veh):	-
Analysis Method:	ICU 1	Level Of Service:	B
Analysis Period:	15 minutes	Volume to Capacity (v/c):	0.682

Intersection Setup

Name	Graham Road		Live Oak Avenue		Live Oak Avenue	
Approach	Northbound		Eastbound		Westbound	
Lane Configuration						
Turning Movement	Left	Right	Thru	Right	Left	Thru
Lane Width [ft]	12.00	12.00	12.00	12.00	12.00	12.00
No. of Lanes in Pocket	0	0	0	0	1	0
Pocket Length [ft]	100.00	100.00	100.00	100.00	205.00	100.00
Speed [mph]	35.00		45.00		45.00	
Grade [%]	0.00		0.00		0.00	
Crosswalk	Yes		No		Yes	

Volumes

Name	Graham Road		Live Oak Avenue		Live Oak Avenue	
Base Volume Input [veh/h]	38	39	578	28	14	1334
Base Volume Adjustment Factor	1.0000	1.0000	1.0000	1.0000	1.0000	1.0000
Heavy Vehicles Percentage [%]	2.00	2.00	2.00	2.00	2.00	2.00
Growth Rate	1.01	1.01	1.01	1.01	1.01	1.01
In-Process Volume [veh/h]	0	0	0	0	0	0
Site-Generated Trips [veh/h]	0	0	341	0	0	361
Diverted Trips [veh/h]	0	0	0	0	0	0
Pass-by Trips [veh/h]	0	0	0	0	0	0
Existing Site Adjustment Volume [veh/h]	0	0	0	0	0	0
Other Volume [veh/h]	0	0	0	0	0	0
Total Hourly Volume [veh/h]	38	39	925	28	14	1708
Peak Hour Factor	1.0000	1.0000	1.0000	1.0000	1.0000	1.0000
Other Adjustment Factor	1.0000	1.0000	1.0000	1.0000	1.0000	1.0000
Total 15-Minute Volume [veh/h]	10	10	231	7	4	427
Total Analysis Volume [veh/h]	38	39	925	28	14	1708
Pedestrian Volume [ped/h]	0		0		0	
Bicycle Volume [bicycles/h]	0		0		0	

Intersection Settings

Cycle Length [s]	100
Lost time [s]	10.00

Phasing & Timing

Control Type	Permissive	Permissive	Permissive	Permissive	Protected	Permissive
Signal group	5	0	8	0	7	4
Auxiliary Signal Groups						
Lead / Lag	Lead	-	-	-	Lead	-

Movement, Approach, & Intersection Results

V/C, Movement V/C Ratio	0.02	0.05	0.29	0.02	0.01	0.53
Intersection LOS	B					
Intersection V/C	0.682					

Intersection Level Of Service Report
Intersection 4: Rivergrade Road (NS) at Live Oak Avenue (EW)

Control Type:	Signalized	Delay (sec / veh):	-
Analysis Method:	ICU 1	Level Of Service:	E
Analysis Period:	15 minutes	Volume to Capacity (v/c):	0.924

Intersection Setup

Name	Rivergrade Raod			Rivergrade Road			Live Oak Avenue			Live Oak Avenue		
Approach	Northbound			Southbound			Eastbound			Westbound		
Lane Configuration												
Turning Movement	Left	Thru	Right	Left	Thru	Right	Left	Thru	Right	Left	Thru	Right
Lane Width [ft]	12.00	12.00	12.00	12.00	12.00	12.00	12.00	12.00	12.00	12.00	12.00	12.00
No. of Lanes in Pocket	1	0	0	1	0	1	1	0	0	1	0	1
Pocket Length [ft]	315.00	100.00	100.00	160.00	100.00	145.00	205.00	100.00	100.00	155.00	100.00	120.00
Speed [mph]	50.00			40.00			45.00			45.00		
Grade [%]	0.00			0.00			0.00			0.00		
Crosswalk	Yes			Yes			Yes			Yes		

Volumes

Name	Rivergrade Raod			Rivergrade Road			Live Oak Avenue			Live Oak Avenue		
Base Volume Input [veh/h]	162	193	481	25	41	54	37	1475	21	117	685	12
Base Volume Adjustment Factor	1.0000	1.0000	1.0000	1.0000	1.0000	1.0000	1.0000	1.0000	1.0000	1.0000	1.0000	1.0000
Heavy Vehicles Percentage [%]	2.00	2.00	2.00	2.00	2.00	2.00	2.00	2.00	2.00	2.00	2.00	2.00
Growth Rate	1.01	1.01	1.01	1.01	1.01	1.01	1.01	1.01	1.01	1.01	1.01	1.01
In-Process Volume [veh/h]	0	0	0	0	0	0	0	0	0	0	0	0
Site-Generated Trips [veh/h]	0	2	3	0	2	99	113	118	0	3	132	0
Diverted Trips [veh/h]	0	0	0	0	0	0	0	0	0	0	0	0
Pass-by Trips [veh/h]	0	0	0	0	0	0	0	0	0	0	0	0
Existing Site Adjustment Volume [veh/h]	0	0	0	0	0	0	0	0	0	0	0	0
Other Volume [veh/h]	0	0	0	0	0	0	0	0	0	0	0	0
Total Hourly Volume [veh/h]	164	197	489	25	43	154	150	1608	21	121	824	12
Peak Hour Factor	1.0000	1.0000	1.0000	1.0000	1.0000	1.0000	1.0000	1.0000	1.0000	1.0000	1.0000	1.0000
Other Adjustment Factor	1.0000	1.0000	1.0000	1.0000	1.0000	1.0000	1.0000	1.0000	1.0000	1.0000	1.0000	1.0000
Total 15-Minute Volume [veh/h]	41	49	122	6	11	39	38	402	5	30	206	3
Total Analysis Volume [veh/h]	164	197	489	25	43	154	150	1608	21	121	824	12
Pedestrian Volume [ped/h]	0			0			0			0		
Bicycle Volume [bicycles/h]	0			0			0			0		

Intersection Settings

Cycle Length [s]	100
Lost time [s]	10.00

Phasing & Timing

Control Type	Protecte	Permiss	Overlap	Protecte	Permiss	Permiss	Protecte	Permiss	Permiss	Protecte	Permiss	Permiss
Signal group	5	2	2	1	6	0	3	8	0	7	4	0
Auxiliary Signal Groups			2,7									
Lead / Lag	Lead	-	-	Lead	-	-	Lead	-	-	Lead	-	-

Movement, Approach, & Intersection Results

V/C, Movement V/C Ratio	0.10	0.12	0.23	0.02	0.01	0.10	0.09	0.50	0.01	0.08	0.26	0.01
Intersection LOS	E											
Intersection V/C	0.924											

Intersection Level Of Service Report
Intersection 5: Stewart Avenue (NS) at Live Oak Avenue (EW)

Control Type:	Signalized	Delay (sec / veh):	-
Analysis Method:	ICU 1	Level Of Service:	D
Analysis Period:	15 minutes	Volume to Capacity (v/c):	0.806

Intersection Setup

Name	Stewart Avenue			Stewart Avenue			Live Oak Avenue			Live Oak Avenue		
Approach	Northbound			Southbound			Eastbound			Westbound		
Lane Configuration												
Turning Movement	Left	Thru	Right	Left	Thru	Right	Left	Thru	Right	Left	Thru	Right
Lane Width [ft]	12.00	12.00	12.00	12.00	12.00	12.00	12.00	12.00	12.00	12.00	12.00	12.00
No. of Lanes in Pocket	0	0	0	1	0	0	1	0	0	1	0	0
Pocket Length [ft]	100.00	100.00	100.00	100.00	100.00	100.00	165.00	100.00	100.00	100.00	100.00	100.00
Speed [mph]	30.00			30.00			45.00			45.00		
Grade [%]	0.00			0.00			0.00			0.00		
Crosswalk	Yes			Yes			No			Yes		

Volumes

Name	Stewart Avenue			Stewart Avenue			Live Oak Avenue			Live Oak Avenue		
Base Volume Input [veh/h]	53	27	7	32	109	7	38	1720	302	31	692	9
Base Volume Adjustment Factor	1.0000	1.0000	1.0000	1.0000	1.0000	1.0000	1.0000	1.0000	1.0000	1.0000	1.0000	1.0000
Heavy Vehicles Percentage [%]	2.00	2.00	2.00	2.00	2.00	2.00	2.00	2.00	2.00	2.00	2.00	2.00
Growth Rate	1.01	1.01	1.01	1.01	1.01	1.01	1.01	1.01	1.01	1.01	1.01	1.01
In-Process Volume [veh/h]	0	0	0	0	0	0	0	0	0	0	0	0
Site-Generated Trips [veh/h]	0	2	3	0	2	0	0	121	0	3	135	7
Diverted Trips [veh/h]	0	0	0	0	0	0	0	0	0	0	0	0
Pass-by Trips [veh/h]	0	0	0	0	0	0	0	0	0	0	0	0
Existing Site Adjustment Volume [veh/h]	0	0	0	0	0	0	0	0	0	0	0	0
Other Volume [veh/h]	0	0	0	0	0	0	0	0	0	0	0	0
Total Hourly Volume [veh/h]	54	29	10	32	112	7	38	1858	305	34	834	16
Peak Hour Factor	1.0000	1.0000	1.0000	1.0000	1.0000	1.0000	1.0000	1.0000	1.0000	1.0000	1.0000	1.0000
Other Adjustment Factor	1.0000	1.0000	1.0000	1.0000	1.0000	1.0000	1.0000	1.0000	1.0000	1.0000	1.0000	1.0000
Total 15-Minute Volume [veh/h]	14	7	3	8	28	2	10	465	76	9	209	4
Total Analysis Volume [veh/h]	54	29	10	32	112	7	38	1858	305	34	834	16
Pedestrian Volume [ped/h]	0			0			0			0		
Bicycle Volume [bicycles/h]	0			0			0			0		

Intersection Settings

Cycle Length [s]	100
Lost time [s]	10.00

Phasing & Timing

Control Type	Permiss	Permiss	Permiss	Permiss	Permiss	Permiss	Permiss	Permiss	Permiss	Permiss	Permiss	Permiss
Signal group	0	2	0	0	6	0	0	8	0	0	4	0
Auxiliary Signal Groups												
Lead / Lag	-	-	-	-	-	-	-	-	-	-	-	-

Movement, Approach, & Intersection Results

V/C, Movement V/C Ratio	0.03	0.06	0.06	0.02	0.07	0.00	0.02	0.58	0.19	0.02	0.26	0.01
Intersection LOS	D											
Intersection V/C	0.806											

Intersection Level Of Service Report
Intersection 6: Baldwin Park Boulevard (NS) at Live Oak Avenue (EW)

Control Type:	Signalized	Delay (sec / veh):	-
Analysis Method:	ICU 1	Level Of Service:	C
Analysis Period:	15 minutes	Volume to Capacity (v/c):	0.743

Intersection Setup

Name	Baldwin Park Boulevard						Live Oak Avenue			Live Oak Avenue		
Approach	Northbound			Southbound			Eastbound			Westbound		
Lane Configuration												
Turning Movement	Left	Thru	Right	Left	Thru	Right	Left	Thru	Right	Left	Thru	Right
Lane Width [ft]	12.00	12.00	12.00	12.00	12.00	12.00	12.00	12.00	12.00	12.00	12.00	12.00
No. of Lanes in Pocket	1	0	0	0	0	0	0	0	0	1	0	0
Pocket Length [ft]	100.00	100.00	100.00	100.00	100.00	100.00	100.00	100.00	100.00	200.00	100.00	100.00
Speed [mph]	40.00			35.00			45.00			45.00		
Grade [%]	0.00			0.00			0.00			0.00		
Crosswalk	Yes			Yes			No			No		

Volumes

Name	Baldwin Park Boulevard						Live Oak Avenue			Live Oak Avenue		
Base Volume Input [veh/h]	77	0	94	0	0	0	0	1259	623	280	623	0
Base Volume Adjustment Factor	1.0000	1.0000	1.0000	1.0000	1.0000	1.0000	1.0000	1.0000	1.0000	1.0000	1.0000	1.0000
Heavy Vehicles Percentage [%]	2.00	2.00	2.00	2.00	2.00	2.00	2.00	2.00	2.00	2.00	2.00	2.00
Growth Rate	1.01	1.01	1.01	1.01	1.01	1.01	1.01	1.01	1.01	1.01	1.01	1.01
In-Process Volume [veh/h]	0	0	0	0	0	0	0	0	0	0	0	0
Site-Generated Trips [veh/h]	8	5	7	23	6	36	23	85	15	19	101	24
Diverted Trips [veh/h]	0	0	0	0	0	0	0	0	0	0	0	0
Pass-by Trips [veh/h]	0	0	0	0	0	0	0	0	0	0	0	0
Existing Site Adjustment Volume [veh/h]	0	0	0	0	0	0	0	0	0	0	0	0
Other Volume [veh/h]	0	0	0	0	0	0	0	0	0	0	0	0
Total Hourly Volume [veh/h]	86	5	102	23	6	36	23	1357	644	302	730	24
Peak Hour Factor	1.0000	1.0000	1.0000	1.0000	1.0000	1.0000	1.0000	1.0000	1.0000	1.0000	1.0000	1.0000
Other Adjustment Factor	1.0000	1.0000	1.0000	1.0000	1.0000	1.0000	1.0000	1.0000	1.0000	1.0000	1.0000	1.0000
Total 15-Minute Volume [veh/h]	22	1	26	6	2	9	6	339	161	76	183	6
Total Analysis Volume [veh/h]	86	5	102	23	6	36	23	1357	644	302	730	24
Pedestrian Volume [ped/h]	0			0			0			0		
Bicycle Volume [bicycles/h]	0			0			0			0		

Intersection Settings

Cycle Length [s]	100
Lost time [s]	10.00

Phasing & Timing

Control Type	Permiss	Permiss	Permiss	Permiss	Permiss	Permiss	Permiss	Permiss	Permiss	Protecte	Permiss	Permiss
Signal group	5	0	0	0	0	0	0	8	0	7	4	0
Auxiliary Signal Groups												
Lead / Lag	Lead	-	-	-	-	-	-	-	-	Lead	-	-

Movement, Approach, & Intersection Results

V/C, Movement V/C Ratio	0.03	0.00	0.00	0.00	0.00	0.00	0.01	0.42	0.40	0.19	0.23	0.02
Intersection LOS	C											
Intersection V/C	0.743											

Intersection Level Of Service Report
Intersection 7: Arrow Highway (NS) at Live Oak Ave/Arrow Hwy (EW)

Control Type:	Signalized	Delay (sec / veh):	-
Analysis Method:	ICU 1	Level Of Service:	E
Analysis Period:	15 minutes	Volume to Capacity (v/c):	0.940

Intersection Setup

Name			Live Oak Avenue		Arrow Highway	
Approach	Southbound		Eastbound		Westbound	
Lane Configuration						
Turning Movement	Left	Right	Left	Thru	Thru	Right
Lane Width [ft]	12.00	12.00	12.00	12.00	12.00	12.00
No. of Lanes in Pocket	0	0	1	0	0	0
Pocket Length [ft]	100.00	100.00	160.00	100.00	100.00	100.00
Speed [mph]	35.00		45.00		45.00	
Grade [%]	0.00		0.00		0.00	
Crosswalk	No		Yes		No	

Volumes

Name			Live Oak Avenue		Arrow Highway	
Base Volume Input [veh/h]	1077	131	41	1326	1117	451
Base Volume Adjustment Factor	1.0000	1.0000	1.0000	1.0000	1.0000	1.0000
Heavy Vehicles Percentage [%]	2.00	2.00	2.00	2.00	2.00	2.00
Growth Rate	1.01	1.01	1.01	1.01	1.01	1.00
In-Process Volume [veh/h]	0	0	0	0	0	0
Site-Generated Trips [veh/h]	41	29	21	94	115	45
Diverted Trips [veh/h]	0	0	0	0	0	0
Pass-by Trips [veh/h]	0	0	0	0	0	0
Existing Site Adjustment Volume [veh/h]	0	0	0	0	0	0
Other Volume [veh/h]	0	0	0	0	0	0
Total Hourly Volume [veh/h]	1129	161	62	1433	1243	496
Peak Hour Factor	1.0000	1.0000	1.0000	1.0000	1.0000	1.0000
Other Adjustment Factor	1.0000	1.0000	1.0000	1.0000	1.0000	1.0000
Total 15-Minute Volume [veh/h]	282	40	16	358	311	124
Total Analysis Volume [veh/h]	1129	161	62	1433	1243	496
Pedestrian Volume [ped/h]	0		0		0	
Bicycle Volume [bicycles/h]	0		0		0	

Intersection Settings

Cycle Length [s]	100
Lost time [s]	10.00

Phasing & Timing

Control Type	Permissive	Permissive	Permissive	Permissive	Permissive	Unsignalized
Signal group	1	0	0	8	4	0
Auxiliary Signal Groups						
Lead / Lag	Lead	-	-	-	-	-

Movement, Approach, & Intersection Results

V/C, Movement V/C Ratio	0.35	0.10	0.04	0.45	0.39	0.00
Intersection LOS	E					
Intersection V/C	0.940					

Intersection Level Of Service Report
Intersection 8: Maine Avenue (NS) at Arrow Highway (EW)

Control Type:	Signalized	Delay (sec / veh):	-
Analysis Method:	ICU 1	Level Of Service:	D
Analysis Period:	15 minutes	Volume to Capacity (v/c):	0.857

Intersection Setup

Name	Maine Avenue		Arrow Highway		Arrow Highway	
Approach	Northbound		Eastbound		Westbound	
Lane Configuration						
Turning Movement	Left	Right	Thru	Right	Left	Thru
Lane Width [ft]	12.00	12.00	12.00	12.00	12.00	12.00
No. of Lanes in Pocket	0	1	0	0	1	0
Pocket Length [ft]	100.00	50.00	100.00	100.00	80.00	100.00
Speed [mph]	35.00		45.00		45.00	
Grade [%]	0.00		0.00		0.00	
Crosswalk	Yes		No		Yes	

Volumes

Name	Maine Avenue		Arrow Highway		Arrow Highway	
Base Volume Input [veh/h]	247	57	1849	555	70	1046
Base Volume Adjustment Factor	1.0000	1.0000	1.0000	1.0000	1.0000	1.0000
Heavy Vehicles Percentage [%]	2.00	2.00	2.00	2.00	2.00	2.00
Growth Rate	1.01	1.01	1.01	1.01	1.01	1.01
In-Process Volume [veh/h]	0	0	0	0	0	0
Site-Generated Trips [veh/h]	5	0	130	5	0	155
Diverted Trips [veh/h]	0	0	0	0	0	0
Pass-by Trips [veh/h]	0	0	0	0	0	0
Existing Site Adjustment Volume [veh/h]	0	0	0	0	0	0
Other Volume [veh/h]	0	0	0	0	0	0
Total Hourly Volume [veh/h]	254	58	1997	566	71	1211
Peak Hour Factor	1.0000	1.0000	1.0000	1.0000	1.0000	1.0000
Other Adjustment Factor	1.0000	1.0000	1.0000	1.0000	1.0000	1.0000
Total 15-Minute Volume [veh/h]	64	15	499	142	18	303
Total Analysis Volume [veh/h]	254	58	1997	566	71	1211
Pedestrian Volume [ped/h]	0		0		0	
Bicycle Volume [bicycles/h]	0		0		0	

Intersection Settings

Cycle Length [s]	100
Lost time [s]	10.00

Phasing & Timing

Control Type	Split	Split	Permissive	Permissive	Permissive	Permissive
Signal group	5	0	8	0	0	4
Auxiliary Signal Groups						
Lead / Lag	Lead	-	-	-	-	-

Movement, Approach, & Intersection Results

V/C, Movement V/C Ratio	0.08	0.04	0.62	0.35	0.04	0.25
Intersection LOS	D					
Intersection V/C	0.857					

Intersection Level Of Service Report

Intersection 9: Santa Fe Dam/Azusa Canyon Road (NS) at Arrow Highway (EW)

Control Type:	Signalized	Delay (sec / veh):	-
Analysis Method:	ICU 1	Level Of Service:	E
Analysis Period:	15 minutes	Volume to Capacity (v/c):	0.943

Intersection Setup

Name	Azusa Canyon Road						Arrow Highway			Arrow Highway		
Approach	Northbound			Southbound			Eastbound			Westbound		
Lane Configuration												
Turning Movement	Left	Thru	Right	Left	Thru	Right	Left	Thru	Right	Left	Thru	Right
Lane Width [ft]	12.00	12.00	12.00	12.00	12.00	12.00	12.00	12.00	12.00	12.00	12.00	12.00
No. of Lanes in Pocket	1	0	0	0	0	0	1	0	0	1	0	0
Pocket Length [ft]	200.00	100.00	100.00	100.00	100.00	100.00	185.00	100.00	100.00	180.00	100.00	100.00
Speed [mph]	35.00			35.00			45.00			45.00		
Grade [%]	0.00			0.00			0.00			0.00		
Crosswalk	Yes			Yes			No			Yes		

Volumes

Name	Azusa Canyon Road						Arrow Highway			Arrow Highway		
Base Volume Input [veh/h]	120	5	442	15	13	29	14	1265	59	158	967	16
Base Volume Adjustment Factor	1.0000	1.0000	1.0000	1.0000	1.0000	1.0000	1.0000	1.0000	1.0000	1.0000	1.0000	1.0000
Heavy Vehicles Percentage [%]	2.00	2.00	2.00	2.00	2.00	2.00	2.00	2.00	2.00	2.00	2.00	2.00
Growth Rate	1.01	1.00	1.01	1.00	1.00	1.00	1.00	1.01	1.01	1.01	1.01	1.00
In-Process Volume [veh/h]	0	0	0	0	0	0	0	0	0	0	0	0
Site-Generated Trips [veh/h]	28	0	4	0	0	0	0	94	30	11	124	0
Diverted Trips [veh/h]	0	0	0	0	0	0	0	0	0	0	0	0
Pass-by Trips [veh/h]	0	0	0	0	0	0	0	0	0	0	0	0
Existing Site Adjustment Volume [veh/h]	0	0	0	0	0	0	0	0	0	0	0	0
Other Volume [veh/h]	0	0	0	0	0	0	0	0	0	0	0	0
Total Hourly Volume [veh/h]	149	5	450	15	13	29	14	1372	90	171	1101	16
Peak Hour Factor	1.0000	1.0000	1.0000	1.0000	1.0000	1.0000	1.0000	1.0000	1.0000	1.0000	1.0000	1.0000
Other Adjustment Factor	1.0000	1.0000	1.0000	1.0000	1.0000	1.0000	1.0000	1.0000	1.0000	1.0000	1.0000	1.0000
Total 15-Minute Volume [veh/h]	37	1	113	4	3	7	4	343	23	43	275	4
Total Analysis Volume [veh/h]	149	5	450	15	13	29	14	1372	90	171	1101	16
Pedestrian Volume [ped/h]	0			0			0			0		
Bicycle Volume [bicycles/h]	0			0			0			0		

Intersection Settings

Cycle Length [s]	100
Lost time [s]	10.00

Phasing & Timing

Control Type	Split	Split	Split	Split	Split	Split	Protecte	Permiss	Permiss	Protecte	Permiss	Permiss
Signal group	0	2	0	0	6	0	3	8	0	7	4	0
Auxiliary Signal Groups												
Lead / Lag	-	-	-	-	-	-	Lead	-	-	Lead	-	-

Movement, Approach, & Intersection Results

V/C, Movement V/C Ratio	0.09	0.00	0.28	0.01	0.03	0.03	0.01	0.43	0.06	0.11	0.34	0.01
Intersection LOS	E											
Intersection V/C	0.943											

Intersection Level Of Service Report
Intersection 10: 4th Street (NS) at Arrow Highway (EW)

Control Type:	Signalized	Delay (sec / veh):	-
Analysis Method:	ICU 1	Level Of Service:	A
Analysis Period:	15 minutes	Volume to Capacity (v/c):	0.576

Intersection Setup

Name	4th Street			4th Street			Arrow Highway			Arrow Highway		
Approach	Northbound			Southbound			Eastbound			Westbound		
Lane Configuration												
Turning Movement	Left	Thru	Right	Left	Thru	Right	Left	Thru	Right	Left	Thru	Right
Lane Width [ft]	12.00	12.00	12.00	12.00	12.00	12.00	12.00	12.00	12.00	12.00	12.00	12.00
No. of Lanes in Pocket	1	0	0	0	0	0	1	0	1	1	0	0
Pocket Length [ft]	55.00	100.00	100.00	100.00	100.00	100.00	145.00	100.00	150.00	195.00	100.00	100.00
Speed [mph]	35.00			25.00			45.00			45.00		
Grade [%]	0.00			0.00			0.00			0.00		
Crosswalk	Yes			Yes			Yes			Yes		

Volumes

Name	4th Street			4th Street			Arrow Highway			Arrow Highway		
Base Volume Input [veh/h]	143	1	44	11	0	12	5	1758	39	41	923	2
Base Volume Adjustment Factor	1.0000	1.0000	1.0000	1.0000	1.0000	1.0000	1.0000	1.0000	1.0000	1.0000	1.0000	1.0000
Heavy Vehicles Percentage [%]	2.00	2.00	2.00	2.00	2.00	2.00	2.00	2.00	2.00	2.00	2.00	2.00
Growth Rate	1.01	1.01	1.01	1.01	1.01	1.01	1.01	1.01	1.01	1.01	1.01	1.01
In-Process Volume [veh/h]	0	0	0	0	0	0	0	0	0	0	0	0
Site-Generated Trips [veh/h]	0	0	0	0	0	0	0	98	0	0	135	0
Diverted Trips [veh/h]	0	0	0	0	0	0	0	0	0	0	0	0
Pass-by Trips [veh/h]	0	0	0	0	0	0	0	0	0	0	0	0
Existing Site Adjustment Volume [veh/h]	0	0	0	0	0	0	0	0	0	0	0	0
Other Volume [veh/h]	0	0	0	0	0	0	0	0	0	0	0	0
Total Hourly Volume [veh/h]	144	1	44	11	0	12	5	1874	39	41	1067	2
Peak Hour Factor	1.0000	1.0000	1.0000	1.0000	1.0000	1.0000	1.0000	1.0000	1.0000	1.0000	1.0000	1.0000
Other Adjustment Factor	1.0000	1.0000	1.0000	1.0000	1.0000	1.0000	1.0000	1.0000	1.0000	1.0000	1.0000	1.0000
Total 15-Minute Volume [veh/h]	36	0	11	3	0	3	1	469	10	10	267	1
Total Analysis Volume [veh/h]	144	1	44	11	0	12	5	1874	39	41	1067	2
Pedestrian Volume [ped/h]	0			0			0			0		
Bicycle Volume [bicycles/h]	0			0			0			0		

Intersection Settings

Cycle Length [s]	100
Lost time [s]	10.00

Phasing & Timing

Control Type	Split	Split	Split	Split	Split	Split	Protecte	Permiss	Permiss	Protecte	Permiss	Permiss
Signal group	0	2	0	0	6	0	3	8	0	7	4	0
Auxiliary Signal Groups												
Lead / Lag	-	-	-	-	-	-	Lead	-	-	Lead	-	-

Movement, Approach, & Intersection Results

V/C, Movement V/C Ratio	0.05	0.05	0.03	0.01	0.00	0.01	0.00	0.39	0.02	0.03	0.33	0.00
Intersection LOS	A											
Intersection V/C	0.576											

Intersection Level Of Service Report
Intersection 11: Irwindale Avenue (NS) at I-210 WB Ramps (EW)

Control Type:	Signalized	Delay (sec / veh):	-
Analysis Method:	ICU 1	Level Of Service:	B
Analysis Period:	15 minutes	Volume to Capacity (v/c):	0.699

Intersection Setup

Name	Irwindale Avenue				I-210 WB Ramps	
Approach	Northbound		Southbound		Westbound	
Lane Configuration						
Turning Movement	Thru	Right	Left	Thru	Left	Right
Lane Width [ft]	12.00	12.00	12.00	12.00	12.00	12.00
No. of Lanes in Pocket	0	0	0	0	0	0
Pocket Length [ft]	100.00	100.00	100.00	100.00	100.00	100.00
Speed [mph]	35.00		35.00		35.00	
Grade [%]	0.00		0.00		0.00	
Crosswalk	No		No		Yes	

Volumes

Name	Irwindale Avenue				I-210 WB Ramps	
Base Volume Input [veh/h]	793	0	0	1473	192	206
Base Volume Adjustment Factor	1.0000	1.0000	1.0000	1.0000	1.0000	1.0000
Heavy Vehicles Percentage [%]	2.00	2.00	2.00	2.00	2.00	2.00
Growth Rate	1.01	1.00	1.00	1.01	1.01	1.01
In-Process Volume [veh/h]	0	0	0	0	0	0
Site-Generated Trips [veh/h]	172	0	0	488	17	91
Diverted Trips [veh/h]	0	0	0	0	0	0
Pass-by Trips [veh/h]	0	0	0	0	0	0
Existing Site Adjustment Volume [veh/h]	0	0	0	0	0	0
Other Volume [veh/h]	0	0	0	0	0	0
Total Hourly Volume [veh/h]	973	0	0	1976	211	299
Peak Hour Factor	1.0000	1.0000	1.0000	1.0000	1.0000	1.0000
Other Adjustment Factor	1.0000	1.0000	1.0000	1.0000	1.0000	1.0000
Total 15-Minute Volume [veh/h]	243	0	0	494	53	75
Total Analysis Volume [veh/h]	973	0	0	1976	211	299
Pedestrian Volume [ped/h]	0		0		0	
Bicycle Volume [bicycles/h]	0		0		0	

Intersection Settings

Cycle Length [s]	100
Lost time [s]	10.00

Phasing & Timing

Control Type	Permissive	Permissive	Permissive	Permissive	Split	Split
Signal group	2	0	0	6	7	0
Auxiliary Signal Groups						
Lead / Lag	-	-	-	-	Lead	-

Movement, Approach, & Intersection Results

V/C, Movement V/C Ratio	0.20	0.00	0.00	0.41	0.07	0.16
Intersection LOS	B					
Intersection V/C	0.699					

Intersection Level Of Service Report

Intersection 12: Irwindale Avenue (NS) at I-210 EB Ramps (EW)

Control Type:	Signalized	Delay (sec / veh):	-
Analysis Method:	ICU 1	Level Of Service:	D
Analysis Period:	15 minutes	Volume to Capacity (v/c):	0.889

Intersection Setup

Name	Irwindale Avenue			Irwindale Avenue			I-210 EB Ramps			I-210 EB Ramps		
Approach	Northbound			Southbound			Eastbound			Westbound		
Lane Configuration												
Turning Movement	Left	Thru	Right	Left	Thru	Right	Left	Thru	Right	Left	Thru	Right
Lane Width [ft]	12.00	12.00	12.00	12.00	12.00	12.00	12.00	12.00	12.00	12.00	12.00	12.00
No. of Lanes in Pocket	0	0	1	1	0	0	0	0	0	0	0	0
Pocket Length [ft]	100.00	100.00	505.00	330.00	100.00	100.00	100.00	100.00	100.00	100.00	100.00	100.00
Speed [mph]	35.00			35.00			35.00			35.00		
Grade [%]	0.00			0.00			0.00			0.00		
Crosswalk	No			No			No			Yes		

Volumes

Name	Irwindale Avenue			Irwindale Avenue			I-210 EB Ramps			I-210 EB Ramps		
Base Volume Input [veh/h]	0	1034	336	416	792	0	375	0	456	0	0	0
Base Volume Adjustment Factor	1.0000	1.0000	1.0000	1.0000	1.0000	1.0000	1.0000	1.0000	1.0000	1.0000	1.0000	1.0000
Heavy Vehicles Percentage [%]	2.00	2.00	2.00	2.00	2.00	2.00	2.00	2.00	2.00	2.00	2.00	2.00
Growth Rate	1.00	1.01	1.01	1.01	1.01	1.00	1.01	1.00	1.01	1.00	1.00	1.00
In-Process Volume [veh/h]	0	0	0	0	0	0	0	0	0	0	0	0
Site-Generated Trips [veh/h]	0	134	90	183	53	0	148	0	26	0	0	0
Diverted Trips [veh/h]	0	0	0	0	0	0	0	0	0	0	0	0
Pass-by Trips [veh/h]	0	0	0	0	0	0	0	0	0	0	0	0
Existing Site Adjustment Volume [veh/h]	0	0	0	0	0	0	0	0	0	0	0	0
Other Volume [veh/h]	0	0	0	0	0	0	0	0	0	0	0	0
Total Hourly Volume [veh/h]	0	1178	429	603	853	0	527	0	487	0	0	0
Peak Hour Factor	1.0000	1.0000	1.0000	1.0000	1.0000	1.0000	1.0000	1.0000	1.0000	1.0000	1.0000	1.0000
Other Adjustment Factor	1.0000	1.0000	1.0000	1.0000	1.0000	1.0000	1.0000	1.0000	1.0000	1.0000	1.0000	1.0000
Total 15-Minute Volume [veh/h]	0	295	107	151	213	0	132	0	122	0	0	0
Total Analysis Volume [veh/h]	0	1178	429	603	853	0	527	0	487	0	0	0
Pedestrian Volume [ped/h]	0			0			0			0		
Bicycle Volume [bicycles/h]	0			0			0			0		

Intersection Settings

Cycle Length [s]	100
Lost time [s]	10.00

Phasing & Timing

Control Type	Permiss	Permiss	Permiss	Protecte	Permiss	Permiss	Split	Permiss	Split	Permiss	Permiss	Permiss
Signal group	0	2	0	1	6	0	3	0	0	0	0	0
Auxiliary Signal Groups												
Lead / Lag	-	-	-	Lead	-	-	Lead	-	-	-	-	-

Movement, Approach, & Intersection Results

V/C, Movement V/C Ratio	0.00	0.37	0.27	0.19	0.27	0.00	0.16	0.00	0.21	0.00	0.00	0.00
Intersection LOS	D											
Intersection V/C	0.889											

Intersection Level Of Service Report

Intersection 13: Irwindale Avenue (NS) at Jardin De Roca/Irwindale Rd (EW)

Control Type:	Signalized	Delay (sec / veh):	-
Analysis Method:	ICU 1	Level Of Service:	D
Analysis Period:	15 minutes	Volume to Capacity (v/c):	0.811

Intersection Setup

Name	Irwindale Avenue			Irwindale Avenue			Jardin De Roca			Irwindale Road		
Approach	Northbound			Southbound			Eastbound			Westbound		
Lane Configuration												
Turning Movement	Left	Thru	Right	Left	Thru	Right	Left	Thru	Right	Left	Thru	Right
Lane Width [ft]	12.00	12.00	12.00	12.00	12.00	12.00	12.00	12.00	12.00	12.00	12.00	12.00
No. of Lanes in Pocket	1	0	1	1	0	0	0	0	0	0	0	0
Pocket Length [ft]	130.00	100.00	180.00	245.00	100.00	100.00	100.00	100.00	100.00	100.00	100.00	100.00
Speed [mph]	35.00			35.00			25.00			25.00		
Grade [%]	0.00			0.00			0.00			0.00		
Crosswalk	No			No			No			Yes		

Volumes

Name	Irwindale Avenue			Irwindale Avenue			Jardin De Roca			Irwindale Road		
Base Volume Input [veh/h]	28	1163	42	35	1205	7	25	0	80	113	0	178
Base Volume Adjustment Factor	1.0000	1.0000	1.0000	1.0000	1.0000	1.0000	1.0000	1.0000	1.0000	1.0000	1.0000	1.0000
Heavy Vehicles Percentage [%]	2.00	2.00	2.00	2.00	2.00	2.00	2.00	2.00	2.00	2.00	2.00	2.00
Growth Rate	1.01	1.01	1.01	1.01	1.01	1.01	1.01	1.00	1.01	1.01	1.00	1.01
In-Process Volume [veh/h]	0	0	0	0	0	0	0	0	0	0	0	0
Site-Generated Trips [veh/h]	0	131	2	25	54	0	0	0	0	12	0	93
Diverted Trips [veh/h]	0	0	0	0	0	0	0	0	0	0	0	0
Pass-by Trips [veh/h]	0	0	0	0	0	0	0	0	0	0	0	0
Existing Site Adjustment Volume [veh/h]	0	0	0	0	0	0	0	0	0	0	0	0
Other Volume [veh/h]	0	0	0	0	0	0	0	0	0	0	0	0
Total Hourly Volume [veh/h]	28	1306	44	60	1271	7	25	0	81	126	0	273
Peak Hour Factor	1.0000	1.0000	1.0000	1.0000	1.0000	1.0000	1.0000	1.0000	1.0000	1.0000	1.0000	1.0000
Other Adjustment Factor	1.0000	1.0000	1.0000	1.0000	1.0000	1.0000	1.0000	1.0000	1.0000	1.0000	1.0000	1.0000
Total 15-Minute Volume [veh/h]	7	327	11	15	318	2	6	0	20	32	0	68
Total Analysis Volume [veh/h]	28	1306	44	60	1271	7	25	0	81	126	0	273
Pedestrian Volume [ped/h]	0			0			0			0		
Bicycle Volume [bicycles/h]	0			0			0			0		

Intersection Settings

Cycle Length [s]	100
Lost time [s]	10.00

Phasing & Timing

Control Type	Protecte	Permiss	Permiss	Protecte	Permiss	Permiss	Permiss	Permiss	Permiss	Permiss	Permiss	Permiss
Signal group	5	2	0	1	6	0	3	0	0	7	0	0
Auxiliary Signal Groups												
Lead / Lag	Lead	-	-	Lead	-	-	Lead	-	-	Lead	-	-

Movement, Approach, & Intersection Results

V/C, Movement V/C Ratio	0.02	0.41	0.03	0.04	0.40	0.00	0.02	0.00	0.07	0.08	0.00	0.38
Intersection LOS	D											
Intersection V/C	0.811											

Intersection Level Of Service Report
Intersection 14: Irwindale Avenue (NS) at 1st Street (EW)

Control Type:	Signalized	Delay (sec / veh):	-
Analysis Method:	ICU 1	Level Of Service:	A
Analysis Period:	15 minutes	Volume to Capacity (v/c):	0.485

Intersection Setup

Name	Irwindale Avenue			Irwindale Avenue			1st Street			1st Street		
Approach	Northbound			Southbound			Eastbound			Westbound		
Lane Configuration												
Turning Movement	Left	Thru	Right	Left	Thru	Right	Left	Thru	Right	Left	Thru	Right
Lane Width [ft]	12.00	12.00	12.00	12.00	12.00	12.00	12.00	12.00	12.00	12.00	12.00	12.00
No. of Lanes in Pocket	1	0	1	1	0	1	1	0	1	1	0	1
Pocket Length [ft]	100.00	100.00	70.00	120.00	100.00	240.00	90.00	100.00	95.00	75.00	100.00	75.00
Speed [mph]	35.00			35.00			35.00			25.00		
Grade [%]	0.00			0.00			0.00			0.00		
Crosswalk	Yes			No			Yes			Yes		

Volumes

Name	Irwindale Avenue			Irwindale Avenue			1st Street			1st Street		
Base Volume Input [veh/h]	11	878	4	9	1337	53	167	0	43	10	0	6
Base Volume Adjustment Factor	1.0000	1.0000	1.0000	1.0000	1.0000	1.0000	1.0000	1.0000	1.0000	1.0000	1.0000	1.0000
Heavy Vehicles Percentage [%]	2.00	2.00	2.00	2.00	2.00	2.00	2.00	2.00	2.00	2.00	2.00	2.00
Growth Rate	1.01	1.01	1.01	1.01	1.01	1.01	1.01	1.01	1.01	1.01	1.01	1.01
In-Process Volume [veh/h]	0	0	0	0	0	0	0	0	0	0	0	0
Site-Generated Trips [veh/h]	0	81	0	0	58	8	52	0	6	0	0	0
Diverted Trips [veh/h]	0	0	0	0	0	0	0	0	0	0	0	0
Pass-by Trips [veh/h]	0	0	0	0	0	0	0	0	0	0	0	0
Existing Site Adjustment Volume [veh/h]	0	0	0	0	0	0	0	0	0	0	0	0
Other Volume [veh/h]	0	0	0	0	0	0	0	0	0	0	0	0
Total Hourly Volume [veh/h]	11	968	4	9	1408	62	221	0	49	10	0	6
Peak Hour Factor	1.0000	1.0000	1.0000	1.0000	1.0000	1.0000	1.0000	1.0000	1.0000	1.0000	1.0000	1.0000
Other Adjustment Factor	1.0000	1.0000	1.0000	1.0000	1.0000	1.0000	1.0000	1.0000	1.0000	1.0000	1.0000	1.0000
Total 15-Minute Volume [veh/h]	3	242	1	2	352	16	55	0	12	3	0	2
Total Analysis Volume [veh/h]	11	968	4	9	1408	62	221	0	49	10	0	6
Pedestrian Volume [ped/h]	0			0			0			0		
Bicycle Volume [bicycles/h]	0			0			0			0		

Intersection Settings

Cycle Length [s]	100
Lost time [s]	10.00

Phasing & Timing

Control Type	Permiss	Permiss	Permiss	Permiss	Permiss	Permiss	Split	Split	Split	Split	Split	Split
Signal group	0	2	0	0	6	0	0	8	0	0	4	0
Auxiliary Signal Groups												
Lead / Lag	-	-	-	-	-	-	-	-	-	-	-	-

Movement, Approach, & Intersection Results

V/C, Movement V/C Ratio	0.01	0.30	0.30	0.01	0.29	0.04	0.07	0.00	0.03	0.01	0.00	0.00
Intersection LOS	A											
Intersection V/C	0.485											

Intersection Level Of Service Report
Intersection 15: Irwindale Avenue (NS) at Gladstone Street (EW)

Control Type:	Signalized	Delay (sec / veh):	-
Analysis Method:	ICU 1	Level Of Service:	B
Analysis Period:	15 minutes	Volume to Capacity (v/c):	0.678

Intersection Setup

Name	Irwindale Avenue			Irwindale Avenue			Gladstone Street			Gladstone Street		
Approach	Northbound			Southbound			Eastbound			Westbound		
Lane Configuration												
Turning Movement	Left	Thru	Right	Left	Thru	Right	Left	Thru	Right	Left	Thru	Right
Lane Width [ft]	12.00	12.00	12.00	12.00	12.00	12.00	12.00	12.00	12.00	12.00	12.00	12.00
No. of Lanes in Pocket	1	0	0	2	0	0	1	0	0	1	0	1
Pocket Length [ft]	120.00	100.00	100.00	210.00	100.00	100.00	50.00	100.00	100.00	200.00	100.00	190.00
Speed [mph]	35.00			35.00			25.00			40.00		
Grade [%]	0.00			0.00			0.00			0.00		
Crosswalk	Yes			Yes			Yes			Yes		

Volumes

Name	Irwindale Avenue			Irwindale Avenue			Gladstone Street			Gladstone Street		
Base Volume Input [veh/h]	1	687	308	530	889	8	5	85	27	150	4	207
Base Volume Adjustment Factor	1.0000	1.0000	1.0000	1.0000	1.0000	1.0000	1.0000	1.0000	1.0000	1.0000	1.0000	1.0000
Heavy Vehicles Percentage [%]	2.00	2.00	2.00	2.00	2.00	2.00	2.00	2.00	2.00	2.00	2.00	2.00
Growth Rate	1.01	1.01	1.01	1.01	1.01	1.01	1.01	1.01	1.01	1.01	1.01	1.01
In-Process Volume [veh/h]	0	0	0	0	0	0	0	0	0	0	0	0
Site-Generated Trips [veh/h]	0	59	21	20	44	0	0	0	0	2	0	22
Diverted Trips [veh/h]	0	0	0	0	0	0	0	0	0	0	0	0
Pass-by Trips [veh/h]	0	0	0	0	0	0	0	0	0	0	0	0
Existing Site Adjustment Volume [veh/h]	0	0	0	0	0	0	0	0	0	0	0	0
Other Volume [veh/h]	0	0	0	0	0	0	0	0	0	0	0	0
Total Hourly Volume [veh/h]	1	753	332	555	942	8	5	86	27	154	4	231
Peak Hour Factor	1.0000	1.0000	1.0000	1.0000	1.0000	1.0000	1.0000	1.0000	1.0000	1.0000	1.0000	1.0000
Other Adjustment Factor	1.0000	1.0000	1.0000	1.0000	1.0000	1.0000	1.0000	1.0000	1.0000	1.0000	1.0000	1.0000
Total 15-Minute Volume [veh/h]	0	188	83	139	236	2	1	22	7	39	1	58
Total Analysis Volume [veh/h]	1	753	332	555	942	8	5	86	27	154	4	231
Pedestrian Volume [ped/h]	0			0			0			0		
Bicycle Volume [bicycles/h]	0			0			0			0		

Intersection Settings

Cycle Length [s]	100
Lost time [s]	10.00

Phasing & Timing

Control Type	Protecte	Permiss	Permiss	Protecte	Permiss	Permiss	Permiss	Permiss	Permiss	Permiss	Permiss	Overlap
Signal group	5	2	0	1	6	0	0	8	0	0	4	4
Auxiliary Signal Groups												1,4
Lead / Lag	Lead	-	-	Lead	-	-	-	-	-	-	-	-

Movement, Approach, & Intersection Results

V/C, Movement V/C Ratio	0.00	0.24	0.21	0.17	0.30	0.30	0.00	0.05	0.02	0.10	0.00	0.00
Intersection LOS	B											
Intersection V/C	0.678											

Intersection Level Of Service Report

Intersection 16: Irwindale Avenue (NS) at Arrow Highway (EW)

Control Type:	Signalized	Delay (sec / veh):	-
Analysis Method:	ICU 1	Level Of Service:	C
Analysis Period:	15 minutes	Volume to Capacity (v/c):	0.792

Intersection Setup

Name	Irwindale Avenue			Irwindale Avenue			Arrow Highway			Arrow Highway		
Approach	Northbound			Southbound			Eastbound			Westbound		
Lane Configuration												
Turning Movement	Left	Thru	Right	Left	Thru	Right	Left	Thru	Right	Left	Thru	Right
Lane Width [ft]	12.00	12.00	12.00	12.00	12.00	12.00	12.00	12.00	12.00	12.00	12.00	12.00
No. of Lanes in Pocket	1	0	0	1	0	1	2	0	0	1	0	0
Pocket Length [ft]	175.00	100.00	100.00	185.00	100.00	185.00	205.00	100.00	100.00	335.00	100.00	100.00
Speed [mph]	35.00			35.00			45.00			45.00		
Grade [%]	0.00			0.00			0.00			0.00		
Crosswalk	Yes			Yes			Yes			Yes		

Volumes

Name	Irwindale Avenue			Irwindale Avenue			Arrow Highway			Arrow Highway		
Base Volume Input [veh/h]	91	488	100	191	714	363	373	1315	73	99	475	63
Base Volume Adjustment Factor	1.0000	1.0000	1.0000	1.0000	1.0000	1.0000	1.0000	1.0000	1.0000	1.0000	1.0000	1.0000
Heavy Vehicles Percentage [%]	2.00	2.00	2.00	2.00	2.00	2.00	2.00	2.00	2.00	2.00	2.00	2.00
Growth Rate	1.01	1.01	1.01	1.01	1.01	1.01	1.01	1.01	1.01	1.01	1.01	1.01
In-Process Volume [veh/h]	0	0	0	0	0	0	0	0	0	0	0	0
Site-Generated Trips [veh/h]	6	13	0	8	21	17	10	78	10	6	112	57
Diverted Trips [veh/h]	0	0	0	0	0	0	0	0	0	0	0	0
Pass-by Trips [veh/h]	0	0	0	0	0	0	0	0	0	0	0	0
Existing Site Adjustment Volume [veh/h]	0	0	0	0	0	0	0	0	0	0	0	0
Other Volume [veh/h]	0	0	0	0	0	0	0	0	0	0	0	0
Total Hourly Volume [veh/h]	98	506	101	201	742	384	387	1406	84	106	592	121
Peak Hour Factor	1.0000	1.0000	1.0000	1.0000	1.0000	1.0000	1.0000	1.0000	1.0000	1.0000	1.0000	1.0000
Other Adjustment Factor	1.0000	1.0000	1.0000	1.0000	1.0000	1.0000	1.0000	1.0000	1.0000	1.0000	1.0000	1.0000
Total 15-Minute Volume [veh/h]	25	127	25	50	186	96	97	352	21	27	148	30
Total Analysis Volume [veh/h]	98	506	101	201	742	384	387	1406	84	106	592	121
Pedestrian Volume [ped/h]	0			0			0			0		
Bicycle Volume [bicycles/h]	0			0			0			0		

Intersection Settings

Cycle Length [s]	100
Lost time [s]	10.00

Phasing & Timing

Control Type	Protecte	Permiss	Permiss	Protecte	Permiss	Overlap	Protecte	Permiss	Permiss	Protecte	Permiss	Permiss
Signal group	5	2	0	1	6	6	3	8	0	7	4	0
Auxiliary Signal Groups						3,6						
Lead / Lag	Lead	-	-	Lead	-	-	Lead	-	-	Lead	-	-

Movement, Approach, & Intersection Results

V/C, Movement V/C Ratio	0.06	0.19	0.19	0.13	0.23	0.12	0.12	0.31	0.31	0.07	0.22	0.22
Intersection LOS	C											
Intersection V/C	0.792											

Intersection Level Of Service Report

Intersection 17: Vincent Avenue (NS) at Gladstone Street (EW)

Control Type:	Signalized	Delay (sec / veh):	-
Analysis Method:	ICU 1	Level Of Service:	D
Analysis Period:	15 minutes	Volume to Capacity (v/c):	0.869

Intersection Setup

Name	Vincent Avenue			Vincent Avenue			Gladstone Street			Gladstone Street		
Approach	Northbound			Southbound			Eastbound			Westbound		
Lane Configuration												
Turning Movement	Left	Thru	Right	Left	Thru	Right	Left	Thru	Right	Left	Thru	Right
Lane Width [ft]	12.00	12.00	12.00	12.00	12.00	12.00	12.00	12.00	12.00	12.00	12.00	12.00
No. of Lanes in Pocket	1	0	0	0	0	0	2	0	0	1	0	0
Pocket Length [ft]	195.00	100.00	100.00	100.00	100.00	100.00	230.00	100.00	100.00	175.00	100.00	100.00
Speed [mph]	45.00			25.00			45.00			45.00		
Grade [%]	0.00			0.00			0.00			0.00		
Crosswalk	Yes			Yes			No			Yes		

Volumes

Name	Vincent Avenue			Vincent Avenue			Gladstone Street			Gladstone Street		
Base Volume Input [veh/h]	113	24	475	16	25	18	14	862	160	150	203	3
Base Volume Adjustment Factor	1.0000	1.0000	1.0000	1.0000	1.0000	1.0000	1.0000	1.0000	1.0000	1.0000	1.0000	1.0000
Heavy Vehicles Percentage [%]	2.00	2.00	2.00	2.00	2.00	2.00	2.00	2.00	2.00	2.00	2.00	2.00
Growth Rate	1.01	1.01	1.01	1.01	1.01	1.01	1.01	1.01	1.01	1.01	1.01	1.01
In-Process Volume [veh/h]	0	0	0	0	0	0	0	0	0	0	0	0
Site-Generated Trips [veh/h]	18	0	16	0	0	0	0	16	25	5	6	0
Diverted Trips [veh/h]	0	0	0	0	0	0	0	0	0	0	0	0
Pass-by Trips [veh/h]	0	0	0	0	0	0	0	0	0	0	0	0
Existing Site Adjustment Volume [veh/h]	0	0	0	0	0	0	0	0	0	0	0	0
Other Volume [veh/h]	0	0	0	0	0	0	0	0	0	0	0	0
Total Hourly Volume [veh/h]	132	24	496	16	25	18	14	887	187	157	211	3
Peak Hour Factor	1.0000	1.0000	1.0000	1.0000	1.0000	1.0000	1.0000	1.0000	1.0000	1.0000	1.0000	1.0000
Other Adjustment Factor	1.0000	1.0000	1.0000	1.0000	1.0000	1.0000	1.0000	1.0000	1.0000	1.0000	1.0000	1.0000
Total 15-Minute Volume [veh/h]	33	6	124	4	6	5	4	222	47	39	53	1
Total Analysis Volume [veh/h]	132	24	496	16	25	18	14	887	187	157	211	3
Pedestrian Volume [ped/h]	0			0			0			0		
Bicycle Volume [bicycles/h]	0			0			0			0		

Intersection Settings

Cycle Length [s]	100
Lost time [s]	10.00

Phasing & Timing

Control Type	Split	Split	Split	Split	Split	Split	Protecte	Permiss	Permiss	Protecte	Permiss	Permiss
Signal group	0	2	0	0	6	0	3	8	0	7	4	0
Auxiliary Signal Groups												
Lead / Lag	-	-	-	-	-	-	Lead	-	-	Lead	-	-

Movement, Approach, & Intersection Results

V/C, Movement V/C Ratio	0.08	0.02	0.31	0.01	0.03	0.03	0.00	0.34	0.34	0.10	0.07	0.07
Intersection LOS	D											
Intersection V/C	0.869											

Intersection Level Of Service Report

Intersection 18: Vincent Avenue (NS) at Arrow Highway (EW)

Control Type:	Signalized	Delay (sec / veh):	-
Analysis Method:	ICU 1	Level Of Service:	D
Analysis Period:	15 minutes	Volume to Capacity (v/c):	0.825

Intersection Setup

Name	Vincent Avenue			Vincent Avenue			Arrow Highway			Arrow Highway		
Approach	Northbound			Southbound			Eastbound			Westbound		
Lane Configuration												
Turning Movement	Left	Thru	Right	Left	Thru	Right	Left	Thru	Right	Left	Thru	Right
Lane Width [ft]	12.00	12.00	12.00	12.00	12.00	12.00	12.00	12.00	12.00	12.00	12.00	12.00
No. of Lanes in Pocket	1	0	0	1	0	0	1	0	0	1	0	0
Pocket Length [ft]	200.00	100.00	100.00	200.00	100.00	100.00	215.00	100.00	100.00	160.00	100.00	100.00
Speed [mph]	45.00			45.00			45.00			45.00		
Grade [%]	0.00			0.00			0.00			0.00		
Crosswalk	Yes			Yes			Yes			Yes		

Volumes

Name	Vincent Avenue			Vincent Avenue			Arrow Highway			Arrow Highway		
Base Volume Input [veh/h]	78	314	143	38	276	84	228	1417	171	106	485	40
Base Volume Adjustment Factor	1.0000	1.0000	1.0000	1.0000	1.0000	1.0000	1.0000	1.0000	1.0000	1.0000	1.0000	1.0000
Heavy Vehicles Percentage [%]	2.00	2.00	2.00	2.00	2.00	2.00	2.00	2.00	2.00	2.00	2.00	2.00
Growth Rate	1.01	1.01	1.01	1.01	1.01	1.01	1.01	1.01	1.01	1.01	1.01	1.01
In-Process Volume [veh/h]	0	0	0	0	0	0	0	0	0	0	0	0
Site-Generated Trips [veh/h]	17	4	1	5	25	42	7	51	28	1	33	1
Diverted Trips [veh/h]	0	0	0	0	0	0	0	0	0	0	0	0
Pass-by Trips [veh/h]	0	0	0	0	0	0	0	0	0	0	0	0
Existing Site Adjustment Volume [veh/h]	0	0	0	0	0	0	0	0	0	0	0	0
Other Volume [veh/h]	0	0	0	0	0	0	0	0	0	0	0	0
Total Hourly Volume [veh/h]	96	321	145	43	304	127	237	1482	201	108	523	41
Peak Hour Factor	1.0000	1.0000	1.0000	1.0000	1.0000	1.0000	1.0000	1.0000	1.0000	1.0000	1.0000	1.0000
Other Adjustment Factor	1.0000	1.0000	1.0000	1.0000	1.0000	1.0000	1.0000	1.0000	1.0000	1.0000	1.0000	1.0000
Total 15-Minute Volume [veh/h]	24	80	36	11	76	32	59	371	50	27	131	10
Total Analysis Volume [veh/h]	96	321	145	43	304	127	237	1482	201	108	523	41
Pedestrian Volume [ped/h]	0			0			0			0		
Bicycle Volume [bicycles/h]	0			0			0			0		

Intersection Settings

Cycle Length [s]	100
Lost time [s]	10.00

Phasing & Timing

Control Type	Permiss	Permiss	Permiss	Permiss	Permiss	Permiss	Permiss	Permiss	Permiss	Permiss	Permiss	Permiss
Signal group	0	2	0	0	6	0	0	8	0	0	4	0
Auxiliary Signal Groups												
Lead / Lag	-	-	-	-	-	-	-	-	-	-	-	-

Movement, Approach, & Intersection Results

V/C, Movement V/C Ratio	0.06	0.15	0.15	0.03	0.13	0.13	0.15	0.46	0.13	0.07	0.16	0.03
Intersection LOS	D											
Intersection V/C	0.825											

Intersection Level Of Service Report
Intersection 21: Vincent Avenue (NS) at Cypress Street (EW)

Control Type:	Signalized	Delay (sec / veh):	-
Analysis Method:	ICU 1	Level Of Service:	C
Analysis Period:	15 minutes	Volume to Capacity (v/c):	0.734

Intersection Setup

Name	Vincent Avenue			Vincent Avenue			Cypress Street			Cypress Street		
Approach	Northbound			Southbound			Eastbound			Westbound		
Lane Configuration												
Turning Movement	Left	Thru	Right	Left	Thru	Right	Left	Thru	Right	Left	Thru	Right
Lane Width [ft]	12.00	12.00	12.00	12.00	12.00	12.00	12.00	12.00	12.00	12.00	12.00	12.00
No. of Lanes in Pocket	1	0	0	1	0	0	1	0	0	1	0	0
Pocket Length [ft]	120.00	100.00	100.00	120.00	100.00	100.00	100.00	100.00	100.00	150.00	100.00	100.00
Speed [mph]	40.00			45.00			40.00			40.00		
Grade [%]	0.00			0.00			0.00			0.00		
Crosswalk	Yes			Yes			Yes			Yes		

Volumes

Name	Vincent Avenue			Vincent Avenue			Cypress Street			Cypress Street		
Base Volume Input [veh/h]	59	447	138	59	448	30	88	984	112	92	295	41
Base Volume Adjustment Factor	1.0000	1.0000	1.0000	1.0000	1.0000	1.0000	1.0000	1.0000	1.0000	1.0000	1.0000	1.0000
Heavy Vehicles Percentage [%]	2.00	2.00	2.00	2.00	2.00	2.00	2.00	2.00	2.00	2.00	2.00	2.00
Growth Rate	1.01	1.01	1.01	1.01	1.01	1.01	1.01	1.01	1.01	1.01	1.01	1.01
In-Process Volume [veh/h]	0	0	0	0	0	0	0	0	0	0	0	0
Site-Generated Trips [veh/h]	0	21	0	2	51	1	0	0	0	0	0	1
Diverted Trips [veh/h]	0	0	0	0	0	0	0	0	0	0	0	0
Pass-by Trips [veh/h]	0	0	0	0	0	0	0	0	0	0	0	0
Existing Site Adjustment Volume [veh/h]	0	0	0	0	0	0	0	0	0	0	0	0
Other Volume [veh/h]	0	0	0	0	0	0	0	0	0	0	0	0
Total Hourly Volume [veh/h]	60	472	139	62	503	31	89	994	113	93	298	42
Peak Hour Factor	1.0000	1.0000	1.0000	1.0000	1.0000	1.0000	1.0000	1.0000	1.0000	1.0000	1.0000	1.0000
Other Adjustment Factor	1.0000	1.0000	1.0000	1.0000	1.0000	1.0000	1.0000	1.0000	1.0000	1.0000	1.0000	1.0000
Total 15-Minute Volume [veh/h]	15	118	35	16	126	8	22	249	28	23	75	11
Total Analysis Volume [veh/h]	60	472	139	62	503	31	89	994	113	93	298	42
Pedestrian Volume [ped/h]	0			0			0			0		
Bicycle Volume [bicycles/h]	0			0			0			0		

Intersection Settings

Cycle Length [s]	100
Lost time [s]	10.00

Phasing & Timing

Control Type	Permiss	Permiss	Permiss	Permiss	Permiss	Permiss	Permiss	Permiss	Permiss	Permiss	Permiss	Permiss
Signal group	0	2	0	0	6	0	0	8	0	0	4	0
Auxiliary Signal Groups												
Lead / Lag	-	-	-	-	-	-	-	-	-	-	-	-

Movement, Approach, & Intersection Results

V/C, Movement V/C Ratio	0.04	0.19	0.19	0.04	0.17	0.17	0.06	0.35	0.35	0.06	0.11	0.11
Intersection LOS	C											
Intersection V/C	0.734											

Intersection Level Of Service Report

Intersection 22: Vincent Avenue (NS) at San Bernardino Road (EW)

Control Type:	Signalized	Delay (sec / veh):	-
Analysis Method:	ICU 1	Level Of Service:	B
Analysis Period:	15 minutes	Volume to Capacity (v/c):	0.674

Intersection Setup

Name	Vincent Avenue			Vincent Avenue			San Bernardino Road			San Berardino Road		
Approach	Northbound			Southbound			Eastbound			Westbound		
Lane Configuration												
Turning Movement	Left	Thru	Right	Left	Thru	Right	Left	Thru	Right	Left	Thru	Right
Lane Width [ft]	12.00	12.00	12.00	12.00	12.00	12.00	12.00	12.00	12.00	12.00	12.00	12.00
No. of Lanes in Pocket	1	0	0	1	0	0	1	0	0	1	0	0
Pocket Length [ft]	120.00	100.00	100.00	150.00	100.00	100.00	150.00	100.00	100.00	165.00	100.00	100.00
Speed [mph]	35.00			40.00			40.00			40.00		
Grade [%]	0.00			0.00			0.00			0.00		
Crosswalk	Yes			Yes			Yes			Yes		

Volumes

Name	Vincent Avenue			Vincent Avenue			San Bernardino Road			San Berardino Road		
Base Volume Input [veh/h]	94	563	77	76	574	48	112	651	110	98	273	80
Base Volume Adjustment Factor	1.0000	1.0000	1.0000	1.0000	1.0000	1.0000	1.0000	1.0000	1.0000	1.0000	1.0000	1.0000
Heavy Vehicles Percentage [%]	2.00	2.00	2.00	2.00	2.00	2.00	2.00	2.00	2.00	2.00	2.00	2.00
Growth Rate	1.01	1.01	1.01	1.01	1.01	1.01	1.01	1.01	1.01	1.01	1.01	1.01
In-Process Volume [veh/h]	0	0	0	0	0	0	0	0	0	0	0	0
Site-Generated Trips [veh/h]	0	21	0	0	51	0	0	0	0	0	0	0
Diverted Trips [veh/h]	0	0	0	0	0	0	0	0	0	0	0	0
Pass-by Trips [veh/h]	0	0	0	0	0	0	0	0	0	0	0	0
Existing Site Adjustment Volume [veh/h]	0	0	0	0	0	0	0	0	0	0	0	0
Other Volume [veh/h]	0	0	0	0	0	0	0	0	0	0	0	0
Total Hourly Volume [veh/h]	95	590	78	77	631	48	113	658	111	99	276	81
Peak Hour Factor	1.0000	1.0000	1.0000	1.0000	1.0000	1.0000	1.0000	1.0000	1.0000	1.0000	1.0000	1.0000
Other Adjustment Factor	1.0000	1.0000	1.0000	1.0000	1.0000	1.0000	1.0000	1.0000	1.0000	1.0000	1.0000	1.0000
Total 15-Minute Volume [veh/h]	24	148	20	19	158	12	28	165	28	25	69	20
Total Analysis Volume [veh/h]	95	590	78	77	631	48	113	658	111	99	276	81
Pedestrian Volume [ped/h]	0			0			0			0		
Bicycle Volume [bicycles/h]	0			0			0			0		

Intersection Settings

Cycle Length [s]	100
Lost time [s]	10.00

Phasing & Timing

Control Type	Permiss	Permiss	Permiss	Permiss	Permiss	Permiss	Protecte	Permiss	Permiss	Protecte	Permiss	Permiss
Signal group	0	2	0	0	6	0	3	8	0	7	4	0
Auxiliary Signal Groups												
Lead / Lag	-	-	-	-	-	-	Lead	-	-	Lead	-	-

Movement, Approach, & Intersection Results

V/C, Movement V/C Ratio	0.06	0.21	0.21	0.05	0.21	0.21	0.07	0.24	0.24	0.06	0.11	0.11
Intersection LOS	B											
Intersection V/C	0.674											

Intersection Level Of Service Report
Intersection 23: Vincent Avenue (NS) at Badillo Street (EW)

Control Type:	Signalized	Delay (sec / veh):	-
Analysis Method:	ICU 1	Level Of Service:	C
Analysis Period:	15 minutes	Volume to Capacity (v/c):	0.773

Intersection Setup

Name	Vincent Avenue			Vincent Avenue			Dadillo Street			Badillo Street		
Approach	Northbound			Southbound			Eastbound			Westbound		
Lane Configuration												
Turning Movement	Left	Thru	Right	Left	Thru	Right	Left	Thru	Right	Left	Thru	Right
Lane Width [ft]	12.00	12.00	12.00	12.00	12.00	12.00	12.00	12.00	12.00	12.00	12.00	12.00
No. of Lanes in Pocket	1	0	0	1	0	0	1	0	0	1	0	0
Pocket Length [ft]	200.00	100.00	100.00	190.00	100.00	100.00	195.00	100.00	100.00	195.00	100.00	100.00
Speed [mph]	40.00			35.00			45.00			45.00		
Grade [%]	0.00			0.00			0.00			0.00		
Crosswalk	Yes			Yes			Yes			Yes		

Volumes

Name	Vincent Avenue			Vincent Avenue			Dadillo Street			Badillo Street		
Base Volume Input [veh/h]	93	584	144	62	702	53	65	953	172	130	421	56
Base Volume Adjustment Factor	1.0000	1.0000	1.0000	1.0000	1.0000	1.0000	1.0000	1.0000	1.0000	1.0000	1.0000	1.0000
Heavy Vehicles Percentage [%]	2.00	2.00	2.00	2.00	2.00	2.00	2.00	2.00	2.00	2.00	2.00	2.00
Growth Rate	1.01	1.01	1.01	1.01	1.01	1.01	1.01	1.01	1.01	1.01	1.01	1.01
In-Process Volume [veh/h]	0	0	0	0	0	0	0	0	0	0	0	0
Site-Generated Trips [veh/h]	0	13	1	17	33	1	0	0	0	0	0	8
Diverted Trips [veh/h]	0	0	0	0	0	0	0	0	0	0	0	0
Pass-by Trips [veh/h]	0	0	0	0	0	0	0	0	0	0	0	0
Existing Site Adjustment Volume [veh/h]	0	0	0	0	0	0	0	0	0	0	0	0
Other Volume [veh/h]	0	0	0	0	0	0	0	0	0	0	0	0
Total Hourly Volume [veh/h]	94	603	146	80	742	55	66	963	174	131	425	65
Peak Hour Factor	1.0000	1.0000	1.0000	1.0000	1.0000	1.0000	1.0000	1.0000	1.0000	1.0000	1.0000	1.0000
Other Adjustment Factor	1.0000	1.0000	1.0000	1.0000	1.0000	1.0000	1.0000	1.0000	1.0000	1.0000	1.0000	1.0000
Total 15-Minute Volume [veh/h]	24	151	37	20	186	14	17	241	44	33	106	16
Total Analysis Volume [veh/h]	94	603	146	80	742	55	66	963	174	131	425	65
Pedestrian Volume [ped/h]	0			0			0			0		
Bicycle Volume [bicycles/h]	0			0			0			0		

Intersection Settings

Cycle Length [s]	100
Lost time [s]	10.00

Phasing & Timing

Control Type	Protecte	Permiss	Permiss	Protecte	Permiss	Permiss	Protecte	Permiss	Permiss	Protecte	Permiss	Permiss
Signal group	5	2	0	1	6	0	3	8	0	7	4	0
Auxiliary Signal Groups												
Lead / Lag	Lead	-	-	Lead	-	-	Lead	-	-	Lead	-	-

Movement, Approach, & Intersection Results

V/C, Movement V/C Ratio	0.06	0.19	0.09	0.05	0.23	0.03	0.04	0.30	0.11	0.08	0.13	0.04
Intersection LOS	C											
Intersection V/C	0.773											

Intersection Level Of Service Report
Intersection 24: Vincent Avenue (NS) at Puente Avenue (EW)

Control Type:	Signalized	Delay (sec / veh):	-
Analysis Method:	ICU 1	Level Of Service:	B
Analysis Period:	15 minutes	Volume to Capacity (v/c):	0.643

Intersection Setup

Name	Vincent Avenue			Vincent Avenue			Puente Avenue			Puente Avenue		
Approach	Northbound			Southbound			Eastbound			Westbound		
Lane Configuration												
Turning Movement	Left	Thru	Right	Left	Thru	Right	Left	Thru	Right	Left	Thru	Right
Lane Width [ft]	12.00	12.00	12.00	12.00	12.00	12.00	12.00	12.00	12.00	12.00	12.00	12.00
No. of Lanes in Pocket	1	0	0	1	0	0	0	0	0	0	0	0
Pocket Length [ft]	195.00	100.00	100.00	195.00	100.00	100.00	100.00	100.00	100.00	100.00	100.00	100.00
Speed [mph]	40.00			40.00			40.00			40.00		
Grade [%]	0.00			0.00			0.00			0.00		
Crosswalk	Yes			Yes			Yes			Yes		

Volumes

Name	Vincent Avenue			Vincent Avenue			Puente Avenue			Puente Avenue		
Base Volume Input [veh/h]	73	727	78	63	832	60	75	540	67	48	265	37
Base Volume Adjustment Factor	1.0000	1.0000	1.0000	1.0000	1.0000	1.0000	1.0000	1.0000	1.0000	1.0000	1.0000	1.0000
Heavy Vehicles Percentage [%]	2.00	2.00	2.00	2.00	2.00	2.00	2.00	2.00	2.00	2.00	2.00	2.00
Growth Rate	1.01	1.01	1.01	1.01	1.01	1.01	1.01	1.01	1.01	1.01	1.01	1.01
In-Process Volume [veh/h]	0	0	0	0	0	0	0	0	0	0	0	0
Site-Generated Trips [veh/h]	0	14	0	0	33	0	0	0	0	0	0	0
Diverted Trips [veh/h]	0	0	0	0	0	0	0	0	0	0	0	0
Pass-by Trips [veh/h]	0	0	0	0	0	0	0	0	0	0	0	0
Existing Site Adjustment Volume [veh/h]	0	0	0	0	0	0	0	0	0	0	0	0
Other Volume [veh/h]	0	0	0	0	0	0	0	0	0	0	0	0
Total Hourly Volume [veh/h]	74	748	79	64	873	61	76	545	68	48	268	37
Peak Hour Factor	1.0000	1.0000	1.0000	1.0000	1.0000	1.0000	1.0000	1.0000	1.0000	1.0000	1.0000	1.0000
Other Adjustment Factor	1.0000	1.0000	1.0000	1.0000	1.0000	1.0000	1.0000	1.0000	1.0000	1.0000	1.0000	1.0000
Total 15-Minute Volume [veh/h]	19	187	20	16	218	15	19	136	17	12	67	9
Total Analysis Volume [veh/h]	74	748	79	64	873	61	76	545	68	48	268	37
Pedestrian Volume [ped/h]	0			0			0			0		
Bicycle Volume [bicycles/h]	0			0			0			0		

Intersection Settings

Cycle Length [s]	100
Lost time [s]	10.00

Phasing & Timing

Control Type	Permiss	Permiss	Permiss	Permiss	Permiss	Permiss	Permiss	Permiss	Permiss	Permiss	Permiss	Permiss
Signal group	0	2	0	0	6	0	0	8	0	0	4	0
Auxiliary Signal Groups												
Lead / Lag	-	-	-	-	-	-	-	-	-	-	-	-

Movement, Approach, & Intersection Results

V/C, Movement V/C Ratio	0.05	0.23	0.05	0.04	0.27	0.04	0.05	0.19	0.04	0.03	0.10	0.02
Intersection LOS	B											
Intersection V/C	0.643											

Intersection Level Of Service Report

Intersection 25: Vincent Avenue (NS) at Rowland Avenue (EW)

Control Type:	Signalized	Delay (sec / veh):	-
Analysis Method:	ICU 1	Level Of Service:	B
Analysis Period:	15 minutes	Volume to Capacity (v/c):	0.618

Intersection Setup

Name	Vincent Avenue			Vincent Avenue			Rowland Avenue			Rowland Avenue		
Approach	Northbound			Southbound			Eastbound			Westbound		
Lane Configuration												
Turning Movement	Left	Thru	Right	Left	Thru	Right	Left	Thru	Right	Left	Thru	Right
Lane Width [ft]	12.00	12.00	12.00	12.00	12.00	12.00	12.00	12.00	12.00	12.00	12.00	12.00
No. of Lanes in Pocket	1	0	0	1	0	0	0	0	0	0	0	0
Pocket Length [ft]	145.00	100.00	100.00	125.00	100.00	100.00	100.00	100.00	100.00	100.00	100.00	100.00
Speed [mph]	35.00			40.00			35.00			35.00		
Grade [%]	0.00			0.00			0.00			0.00		
Crosswalk	Yes			Yes			Yes			Yes		

Volumes

Name	Vincent Avenue			Vincent Avenue			Rowland Avenue			Rowland Avenue		
Base Volume Input [veh/h]	33	840	113	98	849	18	14	206	49	69	93	31
Base Volume Adjustment Factor	1.0000	1.0000	1.0000	1.0000	1.0000	1.0000	1.0000	1.0000	1.0000	1.0000	1.0000	1.0000
Heavy Vehicles Percentage [%]	2.00	2.00	2.00	2.00	2.00	2.00	2.00	2.00	2.00	2.00	2.00	2.00
Growth Rate	1.01	1.01	1.01	1.01	1.01	1.01	1.01	1.01	1.01	1.01	1.01	1.01
In-Process Volume [veh/h]	0	0	0	0	0	0	0	0	0	0	0	0
Site-Generated Trips [veh/h]	0	7	0	9	20	4	2	0	0	0	0	5
Diverted Trips [veh/h]	0	0	0	0	0	0	0	0	0	0	0	0
Pass-by Trips [veh/h]	0	0	0	0	0	0	0	0	0	0	0	0
Existing Site Adjustment Volume [veh/h]	0	0	0	0	0	0	0	0	0	0	0	0
Other Volume [veh/h]	0	0	0	0	0	0	0	0	0	0	0	0
Total Hourly Volume [veh/h]	33	855	114	108	877	22	16	208	49	70	94	36
Peak Hour Factor	1.0000	1.0000	1.0000	1.0000	1.0000	1.0000	1.0000	1.0000	1.0000	1.0000	1.0000	1.0000
Other Adjustment Factor	1.0000	1.0000	1.0000	1.0000	1.0000	1.0000	1.0000	1.0000	1.0000	1.0000	1.0000	1.0000
Total 15-Minute Volume [veh/h]	8	214	29	27	219	6	4	52	12	18	24	9
Total Analysis Volume [veh/h]	33	855	114	108	877	22	16	208	49	70	94	36
Pedestrian Volume [ped/h]	0			0			0			0		
Bicycle Volume [bicycles/h]	0			0			0			0		

Intersection Settings

Cycle Length [s]	100
Lost time [s]	10.00

Phasing & Timing

Control Type	Protecte	Permiss	Permiss	Protecte	Permiss	Permiss	Permiss	Permiss	Permiss	Permiss	Permiss	Permiss
Signal group	5	2	0	1	6	0	0	8	0	0	4	0
Auxiliary Signal Groups												
Lead / Lag	Lead	-	-	Lead	-	-	-	-	-	-	-	-

Movement, Approach, & Intersection Results

V/C, Movement V/C Ratio	0.02	0.27	0.07	0.07	0.27	0.01	0.01	0.14	0.03	0.04	0.10	0.02
Intersection LOS	B											
Intersection V/C	0.618											

Intersection Level Of Service Report

Intersection 26: Vincent Avenue (NS) at Workman Avenue (EW)

Control Type:	Signalized	Delay (sec / veh):	-
Analysis Method:	ICU 1	Level Of Service:	B
Analysis Period:	15 minutes	Volume to Capacity (v/c):	0.693

Intersection Setup

Name	Vincent Avenue			Vincent Avenue			Workman Avenue			Workman Avenue		
Approach	Northbound			Southbound			Eastbound			Westbound		
Lane Configuration												
Turning Movement	Left	Thru	Right	Left	Thru	Right	Left	Thru	Right	Left	Thru	Right
Lane Width [ft]	12.00	12.00	12.00	12.00	12.00	12.00	12.00	12.00	12.00	12.00	12.00	12.00
No. of Lanes in Pocket	1	0	0	1	0	0	0	0	0	0	0	0
Pocket Length [ft]	120.00	100.00	100.00	180.00	100.00	100.00	100.00	100.00	100.00	100.00	100.00	100.00
Speed [mph]	35.00			40.00			35.00			35.00		
Grade [%]	0.00			0.00			0.00			0.00		
Crosswalk	Yes			Yes			Yes			Yes		

Volumes

Name	Vincent Avenue			Vincent Avenue			Workman Avenue			Workman Avenue		
Base Volume Input [veh/h]	91	947	198	81	856	24	17	257	64	108	143	47
Base Volume Adjustment Factor	1.0000	1.0000	1.0000	1.0000	1.0000	1.0000	1.0000	1.0000	1.0000	1.0000	1.0000	1.0000
Heavy Vehicles Percentage [%]	2.00	2.00	2.00	2.00	2.00	2.00	2.00	2.00	2.00	2.00	2.00	2.00
Growth Rate	1.01	1.01	1.01	1.01	1.01	1.01	1.01	1.01	1.01	1.01	1.01	1.01
In-Process Volume [veh/h]	0	0	0	0	0	0	0	0	0	0	0	0
Site-Generated Trips [veh/h]	0	7	1	0	20	0	0	0	0	0	0	0
Diverted Trips [veh/h]	0	0	0	0	0	0	0	0	0	0	0	0
Pass-by Trips [veh/h]	0	0	0	0	0	0	0	0	0	0	0	0
Existing Site Adjustment Volume [veh/h]	0	0	0	0	0	0	0	0	0	0	0	0
Other Volume [veh/h]	0	0	0	0	0	0	0	0	0	0	0	0
Total Hourly Volume [veh/h]	92	963	201	82	885	24	17	260	65	109	144	47
Peak Hour Factor	1.0000	1.0000	1.0000	1.0000	1.0000	1.0000	1.0000	1.0000	1.0000	1.0000	1.0000	1.0000
Other Adjustment Factor	1.0000	1.0000	1.0000	1.0000	1.0000	1.0000	1.0000	1.0000	1.0000	1.0000	1.0000	1.0000
Total 15-Minute Volume [veh/h]	23	241	50	21	221	6	4	65	16	27	36	12
Total Analysis Volume [veh/h]	92	963	201	82	885	24	17	260	65	109	144	47
Pedestrian Volume [ped/h]	0			0			0			0		
Bicycle Volume [bicycles/h]	0			0			0			0		

Intersection Settings

Cycle Length [s]	100
Lost time [s]	10.00

Phasing & Timing

Control Type	Protecte	Permiss	Permiss	Protecte	Permiss	Permiss	Permiss	Permiss	Permiss	Permiss	Permiss	Permiss
Signal group	5	2	0	1	6	0	0	8	0	0	4	0
Auxiliary Signal Groups												
Lead / Lag	Lead	-	-	Lead	-	-	-	-	-	-	-	-

Movement, Approach, & Intersection Results

V/C, Movement V/C Ratio	0.06	0.30	0.13	0.05	0.28	0.02	0.01	0.17	0.04	0.07	0.16	0.03
Intersection LOS	B											
Intersection V/C	0.693											

Intersection Level Of Service Report
Intersection 27: Vincent Avenue (NS) at I-10 WB Ramps (EW)

Control Type:	Signalized	Delay (sec / veh):	-
Analysis Method:	ICU 1	Level Of Service:	A
Analysis Period:	15 minutes	Volume to Capacity (v/c):	0.457

Intersection Setup

Name	Vincent Avenue		Vincent Avenue		I-10 WB Ramps	
Approach	Northbound		Southbound		Westbound	
Lane Configuration						
Turning Movement	Thru	Right	Left	Thru	Left	Right
Lane Width [ft]	12.00	12.00	12.00	12.00	12.00	12.00
No. of Lanes in Pocket	0	0	0	0	0	1
Pocket Length [ft]	100.00	100.00	100.00	100.00	100.00	220.00
Speed [mph]	35.00		35.00		35.00	
Grade [%]	0.00		0.00		0.00	
Crosswalk	No		No		Yes	

Volumes

Name	Vincent Avenue		Vincent Avenue		I-10 WB Ramps	
Base Volume Input [veh/h]	1060	0	0	1075	393	194
Base Volume Adjustment Factor	1.0000	1.0000	1.0000	1.0000	1.0000	1.0000
Heavy Vehicles Percentage [%]	2.00	2.00	2.00	2.00	2.00	2.00
Growth Rate	1.01	1.00	1.00	1.01	1.01	1.01
In-Process Volume [veh/h]	0	0	0	0	0	0
Site-Generated Trips [veh/h]	7	0	0	25	0	5
Diverted Trips [veh/h]	0	0	0	0	0	0
Pass-by Trips [veh/h]	0	0	0	0	0	0
Existing Site Adjustment Volume [veh/h]	0	0	0	0	0	0
Other Volume [veh/h]	0	0	0	0	0	0
Total Hourly Volume [veh/h]	1078	0	0	1111	397	201
Peak Hour Factor	1.0000	1.0000	1.0000	1.0000	1.0000	1.0000
Other Adjustment Factor	1.0000	1.0000	1.0000	1.0000	1.0000	1.0000
Total 15-Minute Volume [veh/h]	270	0	0	278	99	50
Total Analysis Volume [veh/h]	1078	0	0	1111	397	201
Pedestrian Volume [ped/h]	0		0		0	
Bicycle Volume [bicycles/h]	0		0		0	

Intersection Settings

Cycle Length [s]	100
Lost time [s]	10.00

Phasing & Timing

Control Type	Permissive	Permissive	Permissive	Permissive	Split	Split
Signal group	2	0	0	6	7	0
Auxiliary Signal Groups						
Lead / Lag	-	-	-	-	Lead	-

Movement, Approach, & Intersection Results

V/C, Movement V/C Ratio	0.22	0.00	0.00	0.23	0.12	0.13
Intersection LOS	A					
Intersection V/C	0.457					

Intersection Level Of Service Report
Intersection 28: Vincent Avenue (NS) at I-10 EB Ramps (EW)

Control Type:	Signalized	Delay (sec / veh):	-
Analysis Method:	ICU 1	Level Of Service:	A
Analysis Period:	15 minutes	Volume to Capacity (v/c):	0.545

Intersection Setup

Name	Vincent Avenue			Vincent Avenue			I-10 EB Ramps			I-10 EB Ramps		
Approach	Northbound			Southbound			Eastbound			Westbound		
Lane Configuration												
Turning Movement	Left	Thru	Right	Left	Thru	Right	Left	Thru	Right	Left	Thru	Right
Lane Width [ft]	12.00	12.00	12.00	12.00	12.00	12.00	12.00	12.00	12.00	12.00	12.00	12.00
No. of Lanes in Pocket	0	0	0	0	0	0	0	0	0	0	0	0
Pocket Length [ft]	100.00	100.00	100.00	100.00	100.00	100.00	100.00	100.00	100.00	100.00	100.00	100.00
Speed [mph]	35.00			35.00			35.00			35.00		
Grade [%]	0.00			0.00			0.00			0.00		
Crosswalk	No			No			Yes			Yes		

Volumes

Name	Vincent Avenue			Vincent Avenue			I-10 EB Ramps			I-10 EB Ramps		
Base Volume Input [veh/h]	0	903	711	0	1381	340	160	0	129	0	0	0
Base Volume Adjustment Factor	1.0000	1.0000	1.0000	1.0000	1.0000	1.0000	1.0000	1.0000	1.0000	1.0000	1.0000	1.0000
Heavy Vehicles Percentage [%]	2.00	2.00	2.00	2.00	2.00	2.00	2.00	2.00	2.00	2.00	2.00	2.00
Growth Rate	1.00	1.01	1.01	1.00	1.01	1.01	1.01	1.00	1.01	1.00	1.00	1.00
In-Process Volume [veh/h]	0	0	0	0	0	0	0	0	0	0	0	0
Site-Generated Trips [veh/h]	0	1	1	0	4	15	6	0	0	0	0	0
Diverted Trips [veh/h]	0	0	0	0	0	0	0	0	0	0	0	0
Pass-by Trips [veh/h]	0	0	0	0	0	0	0	0	0	0	0	0
Existing Site Adjustment Volume [veh/h]	0	0	0	0	0	0	0	0	0	0	0	0
Other Volume [veh/h]	0	0	0	0	0	0	0	0	0	0	0	0
Total Hourly Volume [veh/h]	0	913	719	0	1399	358	168	0	130	0	0	0
Peak Hour Factor	1.0000	1.0000	1.0000	1.0000	1.0000	1.0000	1.0000	1.0000	1.0000	1.0000	1.0000	1.0000
Other Adjustment Factor	1.0000	1.0000	1.0000	1.0000	1.0000	1.0000	1.0000	1.0000	1.0000	1.0000	1.0000	1.0000
Total 15-Minute Volume [veh/h]	0	228	180	0	350	90	42	0	33	0	0	0
Total Analysis Volume [veh/h]	0	913	719	0	1399	358	168	0	130	0	0	0
Pedestrian Volume [ped/h]	0			0			0			0		
Bicycle Volume [bicycles/h]	0			0			0			0		

Intersection Settings

Cycle Length [s]	100
Lost time [s]	10.00

Phasing & Timing

Control Type	Permiss	Permiss	Permiss	Permiss	Permiss	Permiss	Split	Permiss	Split	Permiss	Permiss	Permiss
Signal group	0	2	0	0	6	0	3	0	0	0	0	0
Auxiliary Signal Groups												
Lead / Lag	-	-	-	-	-	-	Lead	-	-	-	-	-

Movement, Approach, & Intersection Results

V/C, Movement V/C Ratio	0.00	0.34	0.34	0.00	0.29	0.22	0.11	0.00	0.04	0.00	0.00	0.00
Intersection LOS	A											
Intersection V/C	0.545											

Intersection Level Of Service Report

Intersection 29: Vernon Ave/Lark Ellen Ave (NS) at Gladstone Street (EW)

Control Type:	Signalized	Delay (sec / veh):	-
Analysis Method:	ICU 1	Level Of Service:	C
Analysis Period:	15 minutes	Volume to Capacity (v/c):	0.742

Intersection Setup

Name	Lark Ellen Avenue			Vernon Avenue			Gladstone Street			Gladstone Street		
Approach	Northbound			Southbound			Eastbound			Westbound		
Lane Configuration												
Turning Movement	Left	Thru	Right	Left	Thru	Right	Left	Thru	Right	Left	Thru	Right
Lane Width [ft]	12.00	12.00	12.00	12.00	12.00	12.00	12.00	12.00	12.00	12.00	12.00	12.00
No. of Lanes in Pocket	1	0	0	1	0	0	1	0	0	1	0	0
Pocket Length [ft]	60.00	100.00	100.00	60.00	100.00	100.00	70.00	100.00	100.00	60.00	100.00	100.00
Speed [mph]	35.00			35.00			45.00			45.00		
Grade [%]	0.00			0.00			0.00			0.00		
Crosswalk	Yes			Yes			Yes			Yes		

Volumes

Name	Lark Ellen Avenue			Vernon Avenue			Gladstone Street			Gladstone Street		
Base Volume Input [veh/h]	41	335	161	42	424	62	167	992	74	92	238	29
Base Volume Adjustment Factor	1.0000	1.0000	1.0000	1.0000	1.0000	1.0000	1.0000	1.0000	1.0000	1.0000	1.0000	1.0000
Heavy Vehicles Percentage [%]	2.00	2.00	2.00	2.00	2.00	2.00	2.00	2.00	2.00	2.00	2.00	2.00
Growth Rate	1.01	1.01	1.01	1.01	1.01	1.01	1.01	1.01	1.01	1.01	1.01	1.01
In-Process Volume [veh/h]	0	0	0	0	0	0	0	0	0	0	0	0
Site-Generated Trips [veh/h]	0	0	0	0	0	0	0	31	1	0	11	0
Diverted Trips [veh/h]	0	0	0	0	0	0	0	0	0	0	0	0
Pass-by Trips [veh/h]	0	0	0	0	0	0	0	0	0	0	0	0
Existing Site Adjustment Volume [veh/h]	0	0	0	0	0	0	0	0	0	0	0	0
Other Volume [veh/h]	0	0	0	0	0	0	0	0	0	0	0	0
Total Hourly Volume [veh/h]	41	338	163	42	428	63	169	1033	76	93	251	29
Peak Hour Factor	1.0000	1.0000	1.0000	1.0000	1.0000	1.0000	1.0000	1.0000	1.0000	1.0000	1.0000	1.0000
Other Adjustment Factor	1.0000	1.0000	1.0000	1.0000	1.0000	1.0000	1.0000	1.0000	1.0000	1.0000	1.0000	1.0000
Total 15-Minute Volume [veh/h]	10	85	41	11	107	16	42	258	19	23	63	7
Total Analysis Volume [veh/h]	41	338	163	42	428	63	169	1033	76	93	251	29
Pedestrian Volume [ped/h]	0			0			0			0		
Bicycle Volume [bicycles/h]	0			0			0			0		

Intersection Settings

Cycle Length [s]	100
Lost time [s]	10.00

Phasing & Timing

Control Type	Permiss	Permiss	Permiss	Permiss	Permiss	Permiss	Permiss	Permiss	Permiss	Permiss	Permiss	Permiss
Signal group	0	2	0	0	6	0	0	8	0	0	4	0
Auxiliary Signal Groups												
Lead / Lag	-	-	-	-	-	-	-	-	-	-	-	-

Movement, Approach, & Intersection Results

V/C, Movement V/C Ratio	0.03	0.21	0.10	0.03	0.15	0.15	0.11	0.35	0.35	0.06	0.09	0.09
Intersection LOS	C											
Intersection V/C	0.742											

Intersection Level Of Service Report
Intersection 30: Azusa Avenue (NS) at I-210 EB Ramps (EW)

Control Type:	Signalized	Delay (sec / veh):	-
Analysis Method:	ICU 1	Level Of Service:	B
Analysis Period:	15 minutes	Volume to Capacity (v/c):	0.688

Intersection Setup

Name	Azusa Avenue		Azusa Avenue		I-210 EB Ramps	
Approach	Northbound		Southbound		Eastbound	
Lane Configuration						
Turning Movement	Left	Thru	Thru	Right	Left	Right
Lane Width [ft]	12.00	12.00	12.00	12.00	12.00	12.00
No. of Lanes in Pocket	0	0	0	0	0	0
Pocket Length [ft]	100.00	100.00	100.00	100.00	100.00	100.00
Speed [mph]	35.00		35.00		35.00	
Grade [%]	0.00		0.00		0.00	
Crosswalk	No		No		Yes	

Volumes

Name	Azusa Avenue		Azusa Avenue		I-210 EB Ramps	
Base Volume Input [veh/h]	0	1131	795	0	131	321
Base Volume Adjustment Factor	1.0000	1.0000	1.0000	1.0000	1.0000	1.0000
Heavy Vehicles Percentage [%]	2.00	2.00	2.00	2.00	2.00	2.00
Growth Rate	1.00	1.01	1.01	1.00	1.01	1.01
In-Process Volume [veh/h]	0	0	0	0	0	0
Site-Generated Trips [veh/h]	0	66	39	0	19	12
Diverted Trips [veh/h]	0	0	0	0	0	0
Pass-by Trips [veh/h]	0	0	0	0	0	0
Existing Site Adjustment Volume [veh/h]	0	0	0	0	0	0
Other Volume [veh/h]	0	0	0	0	0	0
Total Hourly Volume [veh/h]	0	1208	842	0	151	336
Peak Hour Factor	1.0000	1.0000	1.0000	1.0000	1.0000	1.0000
Other Adjustment Factor	1.0000	1.0000	1.0000	1.0000	1.0000	1.0000
Total 15-Minute Volume [veh/h]	0	302	211	0	38	84
Total Analysis Volume [veh/h]	0	1208	842	0	151	336
Pedestrian Volume [ped/h]	0		0		0	
Bicycle Volume [bicycles/h]	0		0		0	

Intersection Settings

Cycle Length [s]	100
Lost time [s]	10.00

Phasing & Timing

Control Type	Permissive	Permissive	Permissive	Permissive	Split	Split
Signal group	0	2	6	0	3	0
Auxiliary Signal Groups						
Lead / Lag	-	-	-	-	Lead	-

Movement, Approach, & Intersection Results

V/C, Movement V/C Ratio	0.00	0.38	0.26	0.00	0.05	0.21
Intersection LOS	B					
Intersection V/C	0.688					

Intersection Level Of Service Report

Intersection 31: Azusa Avenue (NS) at Paramount Street (EW)

Control Type:	Signalized	Delay (sec / veh):	-
Analysis Method:	ICU 1	Level Of Service:	B
Analysis Period:	15 minutes	Volume to Capacity (v/c):	0.668

Intersection Setup

Name	Azusa Avenue			Azusa Avenue			Paramount Street			Paramount Street		
Approach	Northbound			Southbound			Eastbound			Westbound		
Lane Configuration												
Turning Movement	Left	Thru	Right	Left	Thru	Right	Left	Thru	Right	Left	Thru	Right
Lane Width [ft]	12.00	12.00	12.00	12.00	12.00	12.00	12.00	12.00	12.00	12.00	12.00	12.00
No. of Lanes in Pocket	1	0	0	1	0	0	0	0	0	0	0	0
Pocket Length [ft]	200.00	100.00	100.00	110.00	100.00	100.00	100.00	100.00	100.00	100.00	100.00	100.00
Speed [mph]	35.00			35.00			25.00			15.00		
Grade [%]	0.00			0.00			0.00			0.00		
Crosswalk	No			Yes			Yes			Yes		

Volumes

Name	Azusa Avenue			Azusa Avenue			Paramount Street			Paramount Street		
Base Volume Input [veh/h]	91	923	4	27	966	51	170	1	87	17	7	36
Base Volume Adjustment Factor	1.0000	1.0000	1.0000	1.0000	1.0000	1.0000	1.0000	1.0000	1.0000	1.0000	1.0000	1.0000
Heavy Vehicles Percentage [%]	2.00	2.00	2.00	2.00	2.00	2.00	2.00	2.00	2.00	2.00	2.00	2.00
Growth Rate	1.01	1.01	1.01	1.01	1.01	1.01	1.01	1.01	1.01	1.01	1.01	1.01
In-Process Volume [veh/h]	0	0	0	0	0	0	0	0	0	0	0	0
Site-Generated Trips [veh/h]	6	46	0	0	37	0	26	0	0	0	0	0
Diverted Trips [veh/h]	0	0	0	0	0	0	0	0	0	0	0	0
Pass-by Trips [veh/h]	0	0	0	0	0	0	0	0	0	0	0	0
Existing Site Adjustment Volume [veh/h]	0	0	0	0	0	0	0	0	0	0	0	0
Other Volume [veh/h]	0	0	0	0	0	0	0	0	0	0	0	0
Total Hourly Volume [veh/h]	98	978	4	27	1013	52	198	1	88	17	7	36
Peak Hour Factor	1.0000	1.0000	1.0000	1.0000	1.0000	1.0000	1.0000	1.0000	1.0000	1.0000	1.0000	1.0000
Other Adjustment Factor	1.0000	1.0000	1.0000	1.0000	1.0000	1.0000	1.0000	1.0000	1.0000	1.0000	1.0000	1.0000
Total 15-Minute Volume [veh/h]	25	245	1	7	253	13	50	0	22	4	2	9
Total Analysis Volume [veh/h]	98	978	4	27	1013	52	198	1	88	17	7	36
Pedestrian Volume [ped/h]	0			0			0			0		
Bicycle Volume [bicycles/h]	0			0			0			0		

Intersection Settings

Cycle Length [s]	100
Lost time [s]	10.00

Phasing & Timing

Control Type	Permiss	Permiss	Permiss	Permiss	Permiss	Permiss	Permiss	Permiss	Permiss	Permiss	Permiss	Permiss
Signal group	0	2	0	0	6	0	0	8	0	0	4	0
Auxiliary Signal Groups												
Lead / Lag	-	-	-	-	-	-	-	-	-	-	-	-

Movement, Approach, & Intersection Results

V/C, Movement V/C Ratio	0.06	0.31	0.00	0.02	0.32	0.03	0.12	0.18	0.18	0.01	0.04	0.04
Intersection LOS	B											
Intersection V/C	0.668											

Intersection Level Of Service Report
Intersection 32: Azusa Avenue (NS) at Gladstone Street (EW)

Control Type:	Signalized	Delay (sec / veh):	-
Analysis Method:	ICU 1	Level Of Service:	C
Analysis Period:	15 minutes	Volume to Capacity (v/c):	0.749

Intersection Setup

Name	Azusa Avenue			Azusa Avenue			Gladstone Street			Gladstone Street		
Approach	Northbound			Southbound			Eastbound			Westbound		
Lane Configuration												
Turning Movement	Left	Thru	Right	Left	Thru	Right	Left	Thru	Right	Left	Thru	Right
Lane Width [ft]	12.00	12.00	12.00	12.00	12.00	12.00	12.00	12.00	12.00	12.00	12.00	12.00
No. of Lanes in Pocket	1	0	1	2	0	0	1	0	0	1	0	0
Pocket Length [ft]	190.00	100.00	190.00	190.00	100.00	100.00	150.00	100.00	100.00	150.00	100.00	100.00
Speed [mph]	35.00			35.00			40.00			40.00		
Grade [%]	0.00			0.00			0.00			0.00		
Crosswalk	Yes			Yes			Yes			Yes		

Volumes

Name	Azusa Avenue			Azusa Avenue			Gladstone Street			Gladstone Street		
Base Volume Input [veh/h]	79	668	150	214	716	57	212	762	79	122	287	73
Base Volume Adjustment Factor	1.0000	1.0000	1.0000	1.0000	1.0000	1.0000	1.0000	1.0000	1.0000	1.0000	1.0000	1.0000
Heavy Vehicles Percentage [%]	2.00	2.00	2.00	2.00	2.00	2.00	2.00	2.00	2.00	2.00	2.00	2.00
Growth Rate	1.01	1.01	1.01	1.01	1.01	1.01	1.01	1.01	1.01	1.01	1.01	1.01
In-Process Volume [veh/h]	0	0	0	0	0	0	0	0	0	0	0	0
Site-Generated Trips [veh/h]	0	19	1	14	16	7	17	11	3	1	4	16
Diverted Trips [veh/h]	0	0	0	0	0	0	0	0	0	0	0	0
Pass-by Trips [veh/h]	0	0	0	0	0	0	0	0	0	0	0	0
Existing Site Adjustment Volume [veh/h]	0	0	0	0	0	0	0	0	0	0	0	0
Other Volume [veh/h]	0	0	0	0	0	0	0	0	0	0	0	0
Total Hourly Volume [veh/h]	80	694	153	230	739	65	231	781	83	124	294	90
Peak Hour Factor	1.0000	1.0000	1.0000	1.0000	1.0000	1.0000	1.0000	1.0000	1.0000	1.0000	1.0000	1.0000
Other Adjustment Factor	1.0000	1.0000	1.0000	1.0000	1.0000	1.0000	1.0000	1.0000	1.0000	1.0000	1.0000	1.0000
Total 15-Minute Volume [veh/h]	20	174	38	58	185	16	58	195	21	31	74	23
Total Analysis Volume [veh/h]	80	694	153	230	739	65	231	781	83	124	294	90
Pedestrian Volume [ped/h]	0			0			0			0		
Bicycle Volume [bicycles/h]	0			0			0			0		

Intersection Settings

Cycle Length [s]	100
Lost time [s]	10.00

Phasing & Timing

Control Type	Protecte	Permiss	Overlap	Protecte	Permiss	Permiss	Protecte	Permiss	Permiss	Protecte	Permiss	Permiss
Signal group	5	2	2	1	6	0	3	8	0	7	4	0
Auxiliary Signal Groups			2,7									
Lead / Lag	Lead	-	-	Lead	-	-	Lead	-	-	Lead	-	-

Movement, Approach, & Intersection Results

V/C, Movement V/C Ratio	0.05	0.22	0.02	0.07	0.25	0.25	0.14	0.27	0.27	0.08	0.12	0.12
Intersection LOS	C											
Intersection V/C	0.749											

Intersection Level Of Service Report

Intersection 33: San Gabriel Ave/Azusa Ave (NS) at 1st St (EW)

Control Type:	Signalized	Delay (sec / veh):	-
Analysis Method:	ICU 1	Level Of Service:	B
Analysis Period:	15 minutes	Volume to Capacity (v/c):	0.691

Intersection Setup

Name												
Approach	Northbound			Southbound			Eastbound			Westbound		
Lane Configuration												
Turning Movement	Left	Thru	Right	Left	Thru	Right	Left	Thru	Right	Left	Thru	Right
Lane Width [ft]	12.00	12.00	12.00	12.00	12.00	12.00	12.00	12.00	12.00	12.00	12.00	12.00
No. of Lanes in Pocket	0	0	0	0	0	0	0	0	0	0	0	0
Pocket Length [ft]	100.00	100.00	100.00	100.00	100.00	100.00	100.00	100.00	100.00	100.00	100.00	100.00
Speed [mph]	35.00			35.00			35.00			35.00		
Grade [%]	0.00			0.00			0.00			0.00		
Crosswalk	No			Yes			Yes			Yes		

Volumes

Name												
Base Volume Input [veh/h]	78	505	330	117	837	20	72	175	85	288	164	148
Base Volume Adjustment Factor	1.0000	1.0000	1.0000	1.0000	1.0000	1.0000	1.0000	1.0000	1.0000	1.0000	1.0000	1.0000
Heavy Vehicles Percentage [%]	2.00	2.00	2.00	2.00	2.00	2.00	2.00	2.00	2.00	2.00	2.00	2.00
Growth Rate	1.06	1.06	1.06	1.06	1.06	1.06	1.06	1.06	1.06	1.06	1.06	1.06
In-Process Volume [veh/h]	0	0	0	0	0	0	0	0	0	0	0	0
Site-Generated Trips [veh/h]	0	47	13	15	53	0	0	0	0	15	0	38
Diverted Trips [veh/h]	0	0	0	0	0	0	0	0	0	0	0	0
Pass-by Trips [veh/h]	0	0	0	0	0	0	0	0	0	0	0	0
Existing Site Adjustment Volume [veh/h]	0	0	0	0	0	0	0	0	0	0	0	0
Other Volume [veh/h]	0	0	0	0	0	0	0	0	0	0	0	0
Total Hourly Volume [veh/h]	83	582	363	139	940	21	76	186	90	320	174	195
Peak Hour Factor	0.9690	0.9690	0.9690	0.9690	0.9690	0.9690	0.9690	0.9690	0.9690	0.9690	0.9690	0.9690
Other Adjustment Factor	1.0000	1.0000	1.0000	1.0000	1.0000	1.0000	1.0000	1.0000	1.0000	1.0000	1.0000	1.0000
Total 15-Minute Volume [veh/h]	21	150	94	36	243	5	20	48	23	83	45	50
Total Analysis Volume [veh/h]	86	601	375	143	970	22	78	192	93	330	180	201
Pedestrian Volume [ped/h]	0			0			0			0		
Bicycle Volume [bicycles/h]	0			0			0			0		

Intersection Settings

Cycle Length [s]	100
Lost time [s]	10.00

Phasing & Timing

Control Type	Protecte	Permiss	Permiss	Protecte	Permiss	Permiss	Protecte	Permiss	Permiss	Protecte	Permiss	Permiss
Signal group	5	2	0	1	6	0	3	8	0	7	4	0
Auxiliary Signal Groups												
Lead / Lag	Lead	-	-	Lead	-	-	Lead	-	-	Lead	-	-

Movement, Approach, & Intersection Results

V/C, Movement V/C Ratio	0.05	0.19	0.23	0.09	0.30	0.01	0.05	0.12	0.06	0.10	0.12	0.12
Intersection LOS	B											
Intersection V/C	0.691											

Intersection Level Of Service Report

Intersection 34: Alameda Ave/I-210 WB Ramps (NS) at 1st St (EW)

Control Type:	Signalized	Delay (sec / veh):	-
Analysis Method:	ICU 1	Level Of Service:	C
Analysis Period:	15 minutes	Volume to Capacity (v/c):	0.734

Intersection Setup

Name												
Approach	Northbound			Southbound			Eastbound			Westbound		
Lane Configuration												
Turning Movement	Left	Thru	Right	Left	Thru	Right	Left	Thru	Right	Left	Thru	Right
Lane Width [ft]	12.00	12.00	12.00	12.00	12.00	12.00	12.00	12.00	12.00	12.00	12.00	12.00
No. of Lanes in Pocket	1	0	0	1	0	1	1	0	1	1	0	1
Pocket Length [ft]	325.00	100.00	100.00	50.00	100.00	150.00	55.00	100.00	100.00	100.00	100.00	110.00
Speed [mph]	35.00			35.00			35.00			35.00		
Grade [%]	0.00			0.00			0.00			0.00		
Crosswalk	Yes			Yes			Yes			Yes		

Volumes

Name												
Base Volume Input [veh/h]	366	87	94	46	24	38	20	604	207	177	305	43
Base Volume Adjustment Factor	1.0000	1.0000	1.0000	1.0000	1.0000	1.0000	1.0000	1.0000	1.0000	1.0000	1.0000	1.0000
Heavy Vehicles Percentage [%]	2.00	2.00	2.00	2.00	2.00	2.00	2.00	2.00	2.00	2.00	2.00	2.00
Growth Rate	1.02	1.02	1.02	1.02	1.02	1.02	1.02	1.02	1.02	1.02	1.02	1.02
In-Process Volume [veh/h]	0	0	0	0	0	0	0	0	0	0	0	0
Site-Generated Trips [veh/h]	53	0	0	0	0	0	0	0	28	0	0	0
Diverted Trips [veh/h]	0	0	0	0	0	0	0	0	0	0	0	0
Pass-by Trips [veh/h]	0	0	0	0	0	0	0	0	0	0	0	0
Existing Site Adjustment Volume [veh/h]	0	0	0	0	0	0	0	0	0	0	0	0
Other Volume [veh/h]	0	0	0	0	0	0	0	0	0	0	0	0
Total Hourly Volume [veh/h]	426	89	96	47	24	39	20	616	239	181	311	44
Peak Hour Factor	0.9400	0.9400	0.9400	0.9400	0.9400	0.9400	0.9400	0.9400	0.9400	0.9400	0.9400	0.9400
Other Adjustment Factor	1.0000	1.0000	1.0000	1.0000	1.0000	1.0000	1.0000	1.0000	1.0000	1.0000	1.0000	1.0000
Total 15-Minute Volume [veh/h]	113	24	26	13	6	10	5	164	64	48	83	12
Total Analysis Volume [veh/h]	453	95	102	50	26	41	21	655	254	193	331	47
Pedestrian Volume [ped/h]	0			0			0			0		
Bicycle Volume [bicycles/h]	0			0			0			0		

Intersection Settings

Cycle Length [s]	100
Lost time [s]	10.00

Phasing & Timing

Control Type	Permiss	Permiss	Permiss	Permiss	Permiss	Permiss	Permiss	Permiss	Permiss	Permiss	Permiss	Permiss
Signal group	0	2	0	0	6	0	0	8	0	0	4	0
Auxiliary Signal Groups												
Lead / Lag	-	-	-	-	-	-	-	-	-	-	-	-

Movement, Approach, & Intersection Results

V/C, Movement V/C Ratio	0.28	0.12	0.12	0.03	0.02	0.03	0.01	0.20	0.16	0.12	0.21	0.03
Intersection LOS	C											
Intersection V/C	0.734											

FUTURE BASELINE PLUS CUMULATIVE PROJECTS WITH PROJECT

Vincent Avenue Industrial Building

Vistro File: G:\...\AMC.vistro
Report File: G:\...\FBCP AM.pdf

Scenario 4 Future Baseline Plus Cumulative With Project
5/6/2020

Intersection Analysis Summary

ID	Intersection Name	Control Type	Method	Worst Mvmt	V/C	Delay (s/veh)	LOS
1	I-605 SB On Ramp (NS) at Live Oak Avenue (EW)	Signalized	ICU 1	WB Thru	0.668	-	B
2	I-605 NB Ramps (NS) at Live Oak Avenue (EW)	Two-way stop	HCM 6th Edition	SB Right	2.674	785.2	F
3	Graham Road (NS) at Live Oak Avenue (EW)	Signalized	ICU 1	WB Thru	0.669	-	B
4	Rivergrade Road (NS) at Live Oak Avenue (EW)	Signalized	ICU 1	WB Thru	0.683	-	B
5	Stewart Avenue (NS) at Live Oak Avenue (EW)	Signalized	ICU 1	WB Thru	0.849	-	D
6	Baldwin Park Boulevard (NS) at Live Oak Avenue (EW)	Signalized	ICU 1	WB Thru	0.600	-	B
7	Arrow Highway (NS) at Live Oak Ave/Arrow Hwy (EW)	Signalized	ICU 1	WB Thru	0.684	-	B
8	Maine Avenue (NS) at Arrow Highway (EW)	Signalized	ICU 1	WB Thru	0.824	-	D
9	Santa Fe Dam/Azusa Canyon Road (NS) at Arrow Highway (EW)	Signalized	ICU 1	WB Thru	0.968	-	E
10	4th Street (NS) at Arrow Highway (EW)	Signalized	ICU 1	EB Thru	0.399	-	A
11	Irwindale Avenue (NS) at I-210 WB Ramps (EW)	Signalized	ICU 1	SB Thru	0.595	-	A
12	Irwindale Avenue (NS) at I-210 EB Ramps (EW)	Signalized	ICU 1	EB Right	0.814	-	D
13	Irwindale Avenue (NS) at Jardin De Roca/Irwindale Rd (EW)	Signalized	ICU 1	SB Thru	0.666	-	B
14	Irwindale Avenue (NS) at 1st Street (EW)	Signalized	ICU 1	NB Right	0.530	-	A
15	Irwindale Avenue (NS) at Gladstone Street (EW)	Signalized	ICU 1	WB Left	0.708	-	C
16	Irwindale Avenue (NS) at Arrow Highway (EW)	Signalized	ICU 1	WB Thru	0.891	-	D
17	Vincent Avenue (NS) at	Signalized	ICU 1	WB Thru	0.539		A

17	Gladstone Street (EW)	Signalized	ICU 1	WB Thru	0.539	-	A
18	Vincent Avenue (NS) at Arrow Highway (EW)	Signalized	ICU 1	WB Thru	0.838	-	D
19	Vincent Avenue (NS) at Project North Driveway (EW)	Two-way stop	HCM 6th Edition	EB Left	0.062	15.0	B
20	Vincent Avenue (NS) at Project South Driveway (EW)	Two-way stop	HCM 6th Edition	EB Left	0.045	13.1	B
21	Vincent Avenue (NS) at Cypress Street (EW)	Signalized	ICU 1	WB Thru	0.673	-	B
22	Vincent Avenue (NS) at San Bernardino Road (EW)	Signalized	ICU 1	WB Thru	0.663	-	B
23	Vincent Avenue (NS) at Badillo Street (EW)	Signalized	ICU 1	WB Thru	0.626	-	B
24	Vincent Avenue (NS) at Puente Avenue (EW)	Signalized	ICU 1	NB Thru	0.610	-	B
25	Vincent Avenue (NS) at Rowland Avenue (EW)	Signalized	ICU 1	NB Thru	0.556	-	A
26	Vincent Avenue (NS) at Workman Avenue (EW)	Signalized	ICU 1	SB Thru	0.618	-	B
27	Vincent Avenue (NS) at I-10 WB Ramps (EW)	Signalized	ICU 1	SB Thru	0.469	-	A
28	Vincent Avenue (NS) at I-10 EB Ramps (EW)	Signalized	ICU 1	NB Right	0.503	-	A
29	Vernon Ave/Lark Ellen Ave (NS) at Gladstone Street (EW)	Signalized	ICU 1	WB Thru	0.723	-	C
30	Azusa Avenue (NS) at I-210 EB Ramps (EW)	Signalized	ICU 1	NB Thru	0.688	-	B
31	Azusa Avenue (NS) at Paramount Street (EW)	Signalized	ICU 1	NB Thru	0.648	-	B
32	Azusa Avenue (NS) at Gladstone Street (EW)	Signalized	ICU 1	WB Thru	0.785	-	C
33	San Gabriel Ave/Azusa Ave (NS) at 1st St (EW)	Signalized	ICU 1	SB Thru	0.727	-	C
34	Alameda Ave/I-210 WB Ramps NS) at 1st St (EW)	Signalized	ICU 1	WB Left	1.001	-	F

V/C, Delay, LOS: For two-way stop, these values are taken from the movement with the worst (highest) delay value. For all other control types, they are taken for the whole intersection.

Intersection Level Of Service Report
Intersection 1: I-605 SB On Ramp (NS) at Live Oak Avenue (EW)

Control Type:	Signalized	Delay (sec / veh):	-
Analysis Method:	ICU 1	Level Of Service:	B
Analysis Period:	15 minutes	Volume to Capacity (v/c):	0.668

Intersection Setup

Name	I-605 SB On Ramps				Live Oak Avenue	
Approach	Northbound		Eastbound		Westbound	
Lane Configuration						
Turning Movement	Left	Right	Thru	Right	Left	Thru
Lane Width [ft]	12.00	12.00	12.00	12.00	12.00	12.00
No. of Lanes in Pocket	0	0	0	0	1	0
Pocket Length [ft]	100.00	100.00	100.00	100.00	365.00	100.00
Speed [mph]	35.00		35.00		45.00	
Grade [%]	0.00		0.00		0.00	
Crosswalk	Yes		No		No	

Volumes

Name	I-605 SB On Ramps				Live Oak Avenue	
Base Volume Input [veh/h]	0	0	280	347	521	1094
Base Volume Adjustment Factor	1.0000	1.0000	1.0000	0.0000	1.0000	1.0000
Heavy Vehicles Percentage [%]	2.00	2.00	2.00	2.00	2.00	2.00
Growth Rate	1.00	1.00	1.01	1.01	1.01	1.01
In-Process Volume [veh/h]	0	0	0	0	0	0
Site-Generated Trips [veh/h]	0	0	92	138	196	608
Diverted Trips [veh/h]	0	0	0	0	0	0
Pass-by Trips [veh/h]	0	0	0	0	0	0
Existing Site Adjustment Volume [veh/h]	0	0	0	0	0	0
Other Volume [veh/h]	0	0	0	0	0	0
Total Hourly Volume [veh/h]	0	0	375	138	722	1713
Peak Hour Factor	1.0000	1.0000	1.0000	1.0000	1.0000	1.0000
Other Adjustment Factor	1.0000	1.0000	1.0000	0.0000	1.0000	1.0000
Total 15-Minute Volume [veh/h]	0	0	94	0	181	428
Total Analysis Volume [veh/h]	0	0	375	0	722	1713
Pedestrian Volume [ped/h]	0		0		0	
Bicycle Volume [bicycles/h]	0		0		0	

Intersection Settings

Cycle Length [s]	100
Lost time [s]	10.00

Phasing & Timing

Control Type	Permissive	Permissive	Permissive	Permissive	Protected	Permissive
Signal group	0	0	2	0	1	6
Auxiliary Signal Groups						
Lead / Lag	-	-	-	-	Lead	-

Movement, Approach, & Intersection Results

V/C, Movement V/C Ratio	0.00	0.00	0.12	0.00	0.45	0.54
Intersection LOS	B					
Intersection V/C	0.668					

Intersection Level Of Service Report
Intersection 2: I-605 NB Ramps (NS) at Live Oak Avenue (EW)

Control Type:	Two-way stop	Delay (sec / veh):	785.2
Analysis Method:	HCM 6th Edition	Level Of Service:	F
Analysis Period:	15 minutes	Volume to Capacity (v/c):	2.674

Intersection Setup

Name	I-605 NB Ramps			I-605 NB Ramps			Live Oak Avenue			Live Oak Avenue		
Approach	Northbound			Southbound			Eastbound			Westbound		
Lane Configuration												
Turning Movement	Left	Thru	Right	Left	Thru	Right	Left	Thru	Right	Left	Thru	Right
Lane Width [ft]	12.00	12.00	12.00	12.00	12.00	12.00	12.00	12.00	12.00	12.00	12.00	12.00
No. of Lanes in Pocket	0	0	0	0	0	0	0	0	0	0	0	0
Pocket Length [ft]	100.00	100.00	100.00	100.00	100.00	100.00	100.00	100.00	100.00	100.00	100.00	100.00
Speed [mph]	35.00			35.00			45.00			45.00		
Grade [%]	0.00			0.00			0.00			0.00		
Crosswalk	Yes			Yes			No			No		

Volumes

Name	I-605 NB Ramps			I-605 NB Ramps			Live Oak Avenue			Live Oak Avenue		
Base Volume Input [veh/h]	0	0	469	0	0	432	0	262	0	0	1205	0
Base Volume Adjustment Factor	1.0000	1.0000	1.0000	1.0000	1.0000	1.0000	1.0000	1.0000	1.0000	1.0000	1.0000	1.0000
Heavy Vehicles Percentage [%]	2.00	2.00	2.00	2.00	2.00	2.00	2.00	2.00	2.00	2.00	2.00	2.00
Growth Rate	1.00	1.00	1.01	1.00	1.00	1.01	1.00	1.01	1.00	1.00	1.01	1.00
In-Process Volume [veh/h]	0	0	0	0	0	0	0	0	0	0	0	0
Site-Generated Trips [veh/h]	0	0	363	0	0	484	0	92	0	0	320	0
Diverted Trips [veh/h]	0	0	0	0	0	0	0	0	0	0	0	0
Pass-by Trips [veh/h]	0	0	0	0	0	0	0	0	0	0	0	0
Existing Site Adjustment Volume [veh/h]	0	0	0	0	0	0	0	0	0	0	0	0
Other Volume [veh/h]	0	0	0	0	0	0	0	0	0	0	0	0
Total Hourly Volume [veh/h]	0	0	837	0	0	920	0	357	0	0	1537	0
Peak Hour Factor	1.0000	1.0000	1.0000	1.0000	1.0000	1.0000	1.0000	1.0000	1.0000	1.0000	1.0000	1.0000
Other Adjustment Factor	1.0000	1.0000	1.0000	1.0000	1.0000	1.0000	1.0000	1.0000	1.0000	1.0000	1.0000	1.0000
Total 15-Minute Volume [veh/h]	0	0	209	0	0	230	0	89	0	0	384	0
Total Analysis Volume [veh/h]	0	0	837	0	0	920	0	357	0	0	1537	0
Pedestrian Volume [ped/h]	0			0			0			0		

Intersection Settings

Priority Scheme	Stop	Stop	Free	Free
Flared Lane				
Storage Area [veh]	0	0	0	0
Two-Stage Gap Acceptance	No	No		
Number of Storage Spaces in Median	0	0	0	0

Movement, Approach, & Intersection Results

V/C, Movement V/C Ratio	0.00	0.00	1.00	0.00	0.00	2.67	0.00	0.00	0.00	0.00	0.02	0.00
d_M, Delay for Movement [s/veh]	0.00	0.00	54.41	0.00	0.00	785.18	0.00	0.00	0.00	0.00	0.00	0.00
Movement LOS			F			F		A			A	
95th-Percentile Queue Length [veh/ln]	0.00	0.00	17.93	0.00	0.00	76.50	0.00	0.00	0.00	0.00	0.00	0.00
95th-Percentile Queue Length [ft/ln]	0.00	0.00	448.20	0.00	0.00	1912.62	0.00	0.00	0.00	0.00	0.00	0.00
d_A, Approach Delay [s/veh]	54.41			785.18			0.00			0.00		
Approach LOS	F			F			A			A		
d_I, Intersection Delay [s/veh]	210.33											
Intersection LOS	F											

Intersection Level Of Service Report
Intersection 3: Graham Road (NS) at Live Oak Avenue (EW)

Control Type:	Signalized	Delay (sec / veh):	-
Analysis Method:	ICU 1	Level Of Service:	B
Analysis Period:	15 minutes	Volume to Capacity (v/c):	0.669

Intersection Setup

Name	Graham Road		Live Oak Avenue		Live Oak Avenue	
Approach	Northbound		Eastbound		Westbound	
Lane Configuration						
Turning Movement	Left	Right	Thru	Right	Left	Thru
Lane Width [ft]	12.00	12.00	12.00	12.00	12.00	12.00
No. of Lanes in Pocket	0	0	0	0	1	0
Pocket Length [ft]	100.00	100.00	100.00	100.00	205.00	100.00
Speed [mph]	35.00		45.00		45.00	
Grade [%]	0.00		0.00		0.00	
Crosswalk	Yes		No		Yes	

Volumes

Name	Graham Road		Live Oak Avenue		Live Oak Avenue	
Base Volume Input [veh/h]	38	39	578	28	14	1334
Base Volume Adjustment Factor	1.0000	1.0000	1.0000	1.0000	1.0000	1.0000
Heavy Vehicles Percentage [%]	2.00	2.00	2.00	2.00	2.00	2.00
Growth Rate	1.01	1.01	1.01	1.01	1.01	1.01
In-Process Volume [veh/h]	0	0	0	0	0	0
Site-Generated Trips [veh/h]	0	0	455	0	0	320
Diverted Trips [veh/h]	0	0	0	0	0	0
Pass-by Trips [veh/h]	0	0	0	0	0	0
Existing Site Adjustment Volume [veh/h]	0	0	0	0	0	0
Other Volume [veh/h]	0	0	0	0	0	0
Total Hourly Volume [veh/h]	38	39	1039	28	14	1667
Peak Hour Factor	1.0000	1.0000	1.0000	1.0000	1.0000	1.0000
Other Adjustment Factor	1.0000	1.0000	1.0000	1.0000	1.0000	1.0000
Total 15-Minute Volume [veh/h]	10	10	260	7	4	417
Total Analysis Volume [veh/h]	38	39	1039	28	14	1667
Pedestrian Volume [ped/h]	0		0		0	
Bicycle Volume [bicycles/h]	0		0		0	

Intersection Settings

Cycle Length [s]	100
Lost time [s]	10.00

Phasing & Timing

Control Type	Permissive	Permissive	Permissive	Permissive	Protected	Permissive
Signal group	5	0	8	0	7	4
Auxiliary Signal Groups						
Lead / Lag	Lead	-	-	-	Lead	-

Movement, Approach, & Intersection Results

V/C, Movement V/C Ratio	0.02	0.05	0.32	0.02	0.01	0.52
Intersection LOS	B					
Intersection V/C	0.669					

Intersection Level Of Service Report
Intersection 4: Rivergrade Road (NS) at Live Oak Avenue (EW)

Control Type:	Signalized	Delay (sec / veh):	-
Analysis Method:	ICU 1	Level Of Service:	B
Analysis Period:	15 minutes	Volume to Capacity (v/c):	0.683

Intersection Setup

Name	Rivergrade Raod			Rivergrade Road			Live Oak Avenue			Live Oak Avenue		
Approach	Northbound			Southbound			Eastbound			Westbound		
Lane Configuration												
Turning Movement	Left	Thru	Right	Left	Thru	Right	Left	Thru	Right	Left	Thru	Right
Lane Width [ft]	12.00	12.00	12.00	12.00	12.00	12.00	12.00	12.00	12.00	12.00	12.00	12.00
No. of Lanes in Pocket	1	0	0	1	0	1	1	0	0	1	0	1
Pocket Length [ft]	315.00	100.00	100.00	160.00	100.00	145.00	205.00	100.00	100.00	155.00	100.00	120.00
Speed [mph]	50.00			40.00			45.00			45.00		
Grade [%]	0.00			0.00			0.00			0.00		
Crosswalk	Yes			Yes			Yes			Yes		

Volumes

Name	Rivergrade Raod			Rivergrade Road			Live Oak Avenue			Live Oak Avenue		
Base Volume Input [veh/h]	52	67	138	24	311	58	71	587	77	268	983	22
Base Volume Adjustment Factor	1.0000	1.0000	1.0000	1.0000	1.0000	1.0000	1.0000	1.0000	1.0000	1.0000	1.0000	1.0000
Heavy Vehicles Percentage [%]	2.00	2.00	2.00	2.00	2.00	2.00	2.00	2.00	2.00	2.00	2.00	2.00
Growth Rate	1.01	1.01	1.01	1.01	1.01	1.01	1.01	1.01	1.01	1.01	1.01	1.01
In-Process Volume [veh/h]	0	0	0	0	0	0	0	0	0	0	0	0
Site-Generated Trips [veh/h]	0	2	5	0	2	105	94	246	0	2	107	0
Diverted Trips [veh/h]	0	0	0	0	0	0	0	0	0	0	0	0
Pass-by Trips [veh/h]	0	0	0	0	0	0	0	0	0	0	0	0
Existing Site Adjustment Volume [veh/h]	0	0	0	0	0	0	0	0	0	0	0	0
Other Volume [veh/h]	0	0	0	0	0	0	0	0	0	0	0	0
Total Hourly Volume [veh/h]	53	70	144	24	316	164	166	839	78	273	1100	22
Peak Hour Factor	1.0000	1.0000	1.0000	1.0000	1.0000	1.0000	1.0000	1.0000	1.0000	1.0000	1.0000	1.0000
Other Adjustment Factor	1.0000	1.0000	1.0000	1.0000	1.0000	1.0000	1.0000	1.0000	1.0000	1.0000	1.0000	1.0000
Total 15-Minute Volume [veh/h]	13	18	36	6	79	41	42	210	20	68	275	6
Total Analysis Volume [veh/h]	53	70	144	24	316	164	166	839	78	273	1100	22
Pedestrian Volume [ped/h]	0			0			0			0		
Bicycle Volume [bicycles/h]	0			0			0			0		

Intersection Settings

Cycle Length [s]	100
Lost time [s]	10.00

Phasing & Timing

Control Type	Protecte	Permiss	Overlap	Protecte	Permiss	Permiss	Protecte	Permiss	Permiss	Protecte	Permiss	Permiss
Signal group	5	2	2	1	6	0	3	8	0	7	4	0
Auxiliary Signal Groups			2,7									
Lead / Lag	Lead	-	-	Lead	-	-	Lead	-	-	Lead	-	-

Movement, Approach, & Intersection Results

V/C, Movement V/C Ratio	0.03	0.04	0.00	0.02	0.10	0.10	0.10	0.26	0.05	0.17	0.34	0.01
Intersection LOS	B											
Intersection V/C	0.683											

Intersection Level Of Service Report
Intersection 5: Stewart Avenue (NS) at Live Oak Avenue (EW)

Control Type:	Signalized	Delay (sec / veh):	-
Analysis Method:	ICU 1	Level Of Service:	D
Analysis Period:	15 minutes	Volume to Capacity (v/c):	0.849

Intersection Setup

Name	Stewart Avenue			Stewart Avenue			Live Oak Avenue			Live Oak Avenue		
Approach	Northbound			Southbound			Eastbound			Westbound		
Lane Configuration												
Turning Movement	Left	Thru	Right	Left	Thru	Right	Left	Thru	Right	Left	Thru	Right
Lane Width [ft]	12.00	12.00	12.00	12.00	12.00	12.00	12.00	12.00	12.00	12.00	12.00	12.00
No. of Lanes in Pocket	0	0	0	1	0	0	1	0	0	1	0	0
Pocket Length [ft]	100.00	100.00	100.00	100.00	100.00	100.00	165.00	100.00	100.00	100.00	100.00	100.00
Speed [mph]	30.00			30.00			45.00			45.00		
Grade [%]	0.00			0.00			0.00			0.00		
Crosswalk	Yes			Yes			No			Yes		

Volumes

Name	Stewart Avenue			Stewart Avenue			Live Oak Avenue			Live Oak Avenue		
Base Volume Input [veh/h]	239	112	28	10	35	49	12	609	25	23	1450	26
Base Volume Adjustment Factor	1.0000	1.0000	1.0000	1.0000	1.0000	1.0000	1.0000	1.0000	1.0000	1.0000	1.0000	1.0000
Heavy Vehicles Percentage [%]	2.00	2.00	2.00	2.00	2.00	2.00	2.00	2.00	2.00	2.00	2.00	2.00
Growth Rate	1.01	1.01	1.01	1.01	1.01	1.01	1.01	1.01	1.01	1.01	1.01	1.01
In-Process Volume [veh/h]	0	0	0	0	0	0	0	0	0	0	0	0
Site-Generated Trips [veh/h]	0	2	5	0	2	0	0	251	0	2	109	4
Diverted Trips [veh/h]	0	0	0	0	0	0	0	0	0	0	0	0
Pass-by Trips [veh/h]	0	0	0	0	0	0	0	0	0	0	0	0
Existing Site Adjustment Volume [veh/h]	0	0	0	0	0	0	0	0	0	0	0	0
Other Volume [veh/h]	0	0	0	0	0	0	0	0	0	0	0	0
Total Hourly Volume [veh/h]	241	115	33	10	37	49	12	866	25	25	1574	30
Peak Hour Factor	1.0000	1.0000	1.0000	1.0000	1.0000	1.0000	1.0000	1.0000	1.0000	1.0000	1.0000	1.0000
Other Adjustment Factor	1.0000	1.0000	1.0000	1.0000	1.0000	1.0000	1.0000	1.0000	1.0000	1.0000	1.0000	1.0000
Total 15-Minute Volume [veh/h]	60	29	8	3	9	12	3	217	6	6	394	8
Total Analysis Volume [veh/h]	241	115	33	10	37	49	12	866	25	25	1574	30
Pedestrian Volume [ped/h]	0			0			0			0		
Bicycle Volume [bicycles/h]	0			0			0			0		

Intersection Settings

Cycle Length [s]	100
Lost time [s]	10.00

Phasing & Timing

Control Type	Permiss	Permiss	Permiss	Permiss	Permiss	Permiss	Permiss	Permiss	Permiss	Permiss	Permiss	Permiss
Signal group	0	2	0	0	6	0	0	8	0	0	4	0
Auxiliary Signal Groups												
Lead / Lag	-	-	-	-	-	-	-	-	-	-	-	-

Movement, Approach, & Intersection Results

V/C, Movement V/C Ratio	0.15	0.24	0.24	0.01	0.02	0.03	0.01	0.27	0.02	0.02	0.49	0.02
Intersection LOS	D											
Intersection V/C	0.849											

Intersection Level Of Service Report
Intersection 6: Baldwin Park Boulevard (NS) at Live Oak Avenue (EW)

Control Type:	Signalized	Delay (sec / veh):	-
Analysis Method:	ICU 1	Level Of Service:	B
Analysis Period:	15 minutes	Volume to Capacity (v/c):	0.600

Intersection Setup

Name	Baldwin Park Boulevard						Live Oak Avenue			Live Oak Avenue		
Approach	Northbound			Southbound			Eastbound			Westbound		
Lane Configuration												
Turning Movement	Left	Thru	Right	Left	Thru	Right	Left	Thru	Right	Left	Thru	Right
Lane Width [ft]	12.00	12.00	12.00	12.00	12.00	12.00	12.00	12.00	12.00	12.00	12.00	12.00
No. of Lanes in Pocket	1	0	0	0	0	0	0	0	0	1	0	0
Pocket Length [ft]	100.00	100.00	100.00	100.00	100.00	100.00	100.00	100.00	100.00	200.00	100.00	100.00
Speed [mph]	40.00			35.00			45.00			45.00		
Grade [%]	0.00			0.00			0.00			0.00		
Crosswalk	Yes			Yes			No			No		

Volumes

Name	Baldwin Park Boulevard						Live Oak Avenue			Live Oak Avenue		
Base Volume Input [veh/h]	311	0	237	0	0	0	0	581	89	143	1056	0
Base Volume Adjustment Factor	1.0000	1.0000	1.0000	1.0000	1.0000	1.0000	1.0000	1.0000	1.0000	1.0000	1.0000	1.0000
Heavy Vehicles Percentage [%]	2.00	2.00	2.00	2.00	2.00	2.00	2.00	2.00	2.00	2.00	2.00	2.00
Growth Rate	1.01	1.01	1.01	1.01	1.01	1.01	1.01	1.01	1.01	1.01	1.01	1.01
In-Process Volume [veh/h]	0	0	0	0	0	0	0	0	0	0	0	0
Site-Generated Trips [veh/h]	13	10	26	13	4	18	44	207	5	7	83	44
Diverted Trips [veh/h]	0	0	0	0	0	0	0	0	0	0	0	0
Pass-by Trips [veh/h]	0	0	0	0	0	0	0	0	0	0	0	0
Existing Site Adjustment Volume [veh/h]	0	0	0	0	0	0	0	0	0	0	0	0
Other Volume [veh/h]	0	0	0	0	0	0	0	0	0	0	0	0
Total Hourly Volume [veh/h]	327	10	265	13	4	18	44	794	95	151	1150	44
Peak Hour Factor	1.0000	1.0000	1.0000	1.0000	1.0000	1.0000	1.0000	1.0000	1.0000	1.0000	1.0000	1.0000
Other Adjustment Factor	1.0000	1.0000	1.0000	1.0000	1.0000	1.0000	1.0000	1.0000	1.0000	1.0000	1.0000	1.0000
Total 15-Minute Volume [veh/h]	82	3	66	3	1	5	11	199	24	38	288	11
Total Analysis Volume [veh/h]	327	10	265	13	4	18	44	794	95	151	1150	44
Pedestrian Volume [ped/h]	0			0			0			0		
Bicycle Volume [bicycles/h]	0			0			0			0		

Intersection Settings

Cycle Length [s]	100
Lost time [s]	10.00

Phasing & Timing

Control Type	Permiss	Permiss	Permiss	Permiss	Permiss	Permiss	Permiss	Permiss	Permiss	Protecte	Permiss	Permiss
Signal group	5	0	0	0	0	0	0	8	0	7	4	0
Auxiliary Signal Groups												
Lead / Lag	Lead	-	-	-	-	-	-	-	-	Lead	-	-

Movement, Approach, & Intersection Results

V/C, Movement V/C Ratio	0.10	0.00	0.00	0.00	0.00	0.00	0.03	0.25	0.06	0.09	0.36	0.03
Intersection LOS	B											
Intersection V/C	0.600											

Intersection Level Of Service Report
Intersection 7: Arrow Highway (NS) at Live Oak Ave/Arrow Hwy (EW)

Control Type:	Signalized	Delay (sec / veh):	-
Analysis Method:	ICU 1	Level Of Service:	B
Analysis Period:	15 minutes	Volume to Capacity (v/c):	0.684

Intersection Setup

Name			Live Oak Avenue		Arrow Highway	
Approach	Southbound		Eastbound		Westbound	
Lane Configuration						
Turning Movement	Left	Right	Left	Thru	Thru	Right
Lane Width [ft]	12.00	12.00	12.00	12.00	12.00	12.00
No. of Lanes in Pocket	0	0	1	0	0	0
Pocket Length [ft]	100.00	100.00	160.00	100.00	100.00	100.00
Speed [mph]	35.00		45.00		45.00	
Grade [%]	0.00		0.00		0.00	
Crosswalk	No		Yes		No	

Volumes

Name			Live Oak Avenue		Arrow Highway	
Base Volume Input [veh/h]	296	59	113	634	1117	1772
Base Volume Adjustment Factor	1.0000	1.0000	1.0000	1.0000	1.0000	1.0000
Heavy Vehicles Percentage [%]	2.00	2.00	2.00	2.00	2.00	2.00
Growth Rate	1.01	1.01	1.01	1.01	1.01	1.00
In-Process Volume [veh/h]	0	0	0	0	0	0
Site-Generated Trips [veh/h]	38	35	20	226	99	41
Diverted Trips [veh/h]	0	0	0	0	0	0
Pass-by Trips [veh/h]	0	0	0	0	0	0
Existing Site Adjustment Volume [veh/h]	0	0	0	0	0	0
Other Volume [veh/h]	0	0	0	0	0	0
Total Hourly Volume [veh/h]	337	95	134	866	1227	1813
Peak Hour Factor	1.0000	1.0000	1.0000	1.0000	1.0000	1.0000
Other Adjustment Factor	1.0000	1.0000	1.0000	1.0000	1.0000	1.0000
Total 15-Minute Volume [veh/h]	84	24	34	217	307	453
Total Analysis Volume [veh/h]	337	95	134	866	1227	1813
Pedestrian Volume [ped/h]	0		0		0	
Bicycle Volume [bicycles/h]	0		0		0	

Intersection Settings

Cycle Length [s]	100
Lost time [s]	10.00

Phasing & Timing

Control Type	Permissive	Permissive	Permissive	Permissive	Permissive	Unsignalized
Signal group	1	0	0	8	4	0
Auxiliary Signal Groups						
Lead / Lag	Lead	-	-	-	-	-

Movement, Approach, & Intersection Results

V/C, Movement V/C Ratio	0.11	0.06	0.08	0.27	0.38	0.00
Intersection LOS	B					
Intersection V/C	0.684					

Intersection Level Of Service Report
Intersection 8: Maine Avenue (NS) at Arrow Highway (EW)

Control Type:	Signalized	Delay (sec / veh):	-
Analysis Method:	ICU 1	Level Of Service:	D
Analysis Period:	15 minutes	Volume to Capacity (v/c):	0.824

Intersection Setup

Name	Maine Avenue		Arrow Highway		Arrow Highway	
Approach	Northbound		Eastbound		Westbound	
Lane Configuration						
Turning Movement	Left	Right	Thru	Right	Left	Thru
Lane Width [ft]	12.00	12.00	12.00	12.00	12.00	12.00
No. of Lanes in Pocket	0	1	0	0	1	0
Pocket Length [ft]	100.00	50.00	100.00	100.00	80.00	100.00
Speed [mph]	35.00		45.00		45.00	
Grade [%]	0.00		0.00		0.00	
Crosswalk	Yes		No		Yes	

Volumes

Name	Maine Avenue		Arrow Highway		Arrow Highway	
Base Volume Input [veh/h]	606	96	869	172	61	2288
Base Volume Adjustment Factor	1.0000	1.0000	1.0000	1.0000	1.0000	1.0000
Heavy Vehicles Percentage [%]	2.00	2.00	2.00	2.00	2.00	2.00
Growth Rate	1.01	1.01	1.01	1.01	1.01	1.01
In-Process Volume [veh/h]	0	0	0	0	0	0
Site-Generated Trips [veh/h]	7	0	260	4	0	133
Diverted Trips [veh/h]	0	0	0	0	0	0
Pass-by Trips [veh/h]	0	0	0	0	0	0
Existing Site Adjustment Volume [veh/h]	0	0	0	0	0	0
Other Volume [veh/h]	0	0	0	0	0	0
Total Hourly Volume [veh/h]	619	97	1138	178	62	2444
Peak Hour Factor	1.0000	1.0000	1.0000	1.0000	1.0000	1.0000
Other Adjustment Factor	1.0000	1.0000	1.0000	1.0000	1.0000	1.0000
Total 15-Minute Volume [veh/h]	155	24	285	45	16	611
Total Analysis Volume [veh/h]	619	97	1138	178	62	2444
Pedestrian Volume [ped/h]	0		0		0	
Bicycle Volume [bicycles/h]	0		0		0	

Intersection Settings

Cycle Length [s]	100
Lost time [s]	10.00

Phasing & Timing

Control Type	Split	Split	Permissive	Permissive	Permissive	Permissive
Signal group	5	0	8	0	0	4
Auxiliary Signal Groups						
Lead / Lag	Lead	-	-	-	-	-

Movement, Approach, & Intersection Results

V/C, Movement V/C Ratio	0.19	0.06	0.36	0.11	0.04	0.51
Intersection LOS	D					
Intersection V/C	0.824					

Intersection Level Of Service Report

Intersection 9: Santa Fe Dam/Azusa Canyon Road (NS) at Arrow Highway (EW)

Control Type:	Signalized	Delay (sec / veh):	-
Analysis Method:	ICU 1	Level Of Service:	E
Analysis Period:	15 minutes	Volume to Capacity (v/c):	0.968

Intersection Setup

Name	Azusa Canyon Road						Arrow Highway			Arrow Highway		
Approach	Northbound			Southbound			Eastbound			Westbound		
Lane Configuration												
Turning Movement	Left	Thru	Right	Left	Thru	Right	Left	Thru	Right	Left	Thru	Right
Lane Width [ft]	12.00	12.00	12.00	12.00	12.00	12.00	12.00	12.00	12.00	12.00	12.00	12.00
No. of Lanes in Pocket	1	0	0	0	0	0	1	0	0	1	0	0
Pocket Length [ft]	200.00	100.00	100.00	100.00	100.00	100.00	185.00	100.00	100.00	180.00	100.00	100.00
Speed [mph]	35.00			35.00			45.00			45.00		
Grade [%]	0.00			0.00			0.00			0.00		
Crosswalk	Yes			Yes			No			Yes		

Volumes

Name	Azusa Canyon Road						Arrow Highway			Arrow Highway		
Base Volume Input [veh/h]	837	14	145	11	3	12	19	624	122	67	1708	23
Base Volume Adjustment Factor	1.0000	1.0000	1.0000	1.0000	1.0000	1.0000	1.0000	1.0000	1.0000	1.0000	1.0000	1.0000
Heavy Vehicles Percentage [%]	2.00	2.00	2.00	2.00	2.00	2.00	2.00	2.00	2.00	2.00	2.00	2.00
Growth Rate	1.01	1.00	1.01	1.00	1.00	1.00	1.00	1.01	1.01	1.01	1.01	1.00
In-Process Volume [veh/h]	0	0	0	0	0	0	0	0	0	0	0	0
Site-Generated Trips [veh/h]	26	0	19	0	0	0	0	237	22	4	101	0
Diverted Trips [veh/h]	0	0	0	0	0	0	0	0	0	0	0	0
Pass-by Trips [veh/h]	0	0	0	0	0	0	0	0	0	0	0	0
Existing Site Adjustment Volume [veh/h]	0	0	0	0	0	0	0	0	0	0	0	0
Other Volume [veh/h]	0	0	0	0	0	0	0	0	0	0	0	0
Total Hourly Volume [veh/h]	871	14	165	11	3	12	19	867	145	72	1826	23
Peak Hour Factor	1.0000	1.0000	1.0000	1.0000	1.0000	1.0000	1.0000	1.0000	1.0000	1.0000	1.0000	1.0000
Other Adjustment Factor	1.0000	1.0000	1.0000	1.0000	1.0000	1.0000	1.0000	1.0000	1.0000	1.0000	1.0000	1.0000
Total 15-Minute Volume [veh/h]	218	4	41	3	1	3	5	217	36	18	457	6
Total Analysis Volume [veh/h]	871	14	165	11	3	12	19	867	145	72	1826	23
Pedestrian Volume [ped/h]	0			0			0			0		
Bicycle Volume [bicycles/h]	0			0			0			0		

Intersection Settings

Cycle Length [s]	100
Lost time [s]	10.00

Phasing & Timing

Control Type	Split	Split	Split	Split	Split	Split	Protecte	Permiss	Permiss	Protecte	Permiss	Permiss
Signal group	0	2	0	0	6	0	3	8	0	7	4	0
Auxiliary Signal Groups												
Lead / Lag	-	-	-	-	-	-	Lead	-	-	Lead	-	-

Movement, Approach, & Intersection Results

V/C, Movement V/C Ratio	0.27	0.28	0.10	0.01	0.01	0.01	0.01	0.27	0.09	0.05	0.57	0.01
Intersection LOS	E											
Intersection V/C	0.968											

Intersection Level Of Service Report
Intersection 10: 4th Street (NS) at Arrow Highway (EW)

Control Type:	Signalized	Delay (sec / veh):	-
Analysis Method:	ICU 1	Level Of Service:	A
Analysis Period:	15 minutes	Volume to Capacity (v/c):	0.399

Intersection Setup

Name	4th Street			4th Street			Arrow Highway			Arrow Highway		
Approach	Northbound			Southbound			Eastbound			Westbound		
Lane Configuration												
Turning Movement	Left	Thru	Right	Left	Thru	Right	Left	Thru	Right	Left	Thru	Right
Lane Width [ft]	12.00	12.00	12.00	12.00	12.00	12.00	12.00	12.00	12.00	12.00	12.00	12.00
No. of Lanes in Pocket	1	0	0	0	0	0	1	0	1	1	0	0
Pocket Length [ft]	55.00	100.00	100.00	100.00	100.00	100.00	145.00	100.00	150.00	195.00	100.00	100.00
Speed [mph]	35.00			25.00			45.00			45.00		
Grade [%]	0.00			0.00			0.00			0.00		
Crosswalk	Yes			Yes			Yes			Yes		

Volumes

Name	4th Street			4th Street			Arrow Highway			Arrow Highway		
Base Volume Input [veh/h]	76	1	22	3	2	12	20	769	126	77	0	0
Base Volume Adjustment Factor	1.0000	1.0000	1.0000	1.0000	1.0000	1.0000	1.0000	1.0000	1.0000	1.0000	1.0000	1.0000
Heavy Vehicles Percentage [%]	2.00	2.00	2.00	2.00	2.00	2.00	2.00	2.00	2.00	2.00	2.00	2.00
Growth Rate	1.01	1.01	1.01	1.01	1.01	1.01	1.01	1.01	1.01	1.01	1.01	1.01
In-Process Volume [veh/h]	0	0	0	0	0	0	0	0	0	0	0	0
Site-Generated Trips [veh/h]	0	0	0	0	0	0	0	256	0	0	105	0
Diverted Trips [veh/h]	0	0	0	0	0	0	0	0	0	0	0	0
Pass-by Trips [veh/h]	0	0	0	0	0	0	0	0	0	0	0	0
Existing Site Adjustment Volume [veh/h]	0	0	0	0	0	0	0	0	0	0	0	0
Other Volume [veh/h]	0	0	0	0	0	0	0	0	0	0	0	0
Total Hourly Volume [veh/h]	77	1	22	3	2	12	20	1033	127	78	105	0
Peak Hour Factor	1.0000	1.0000	1.0000	1.0000	1.0000	1.0000	1.0000	1.0000	1.0000	1.0000	1.0000	1.0000
Other Adjustment Factor	1.0000	1.0000	1.0000	1.0000	1.0000	1.0000	1.0000	1.0000	1.0000	1.0000	1.0000	1.0000
Total 15-Minute Volume [veh/h]	19	0	6	1	1	3	5	258	32	20	26	0
Total Analysis Volume [veh/h]	77	1	22	3	2	12	20	1033	127	78	105	0
Pedestrian Volume [ped/h]	0			0			0			0		
Bicycle Volume [bicycles/h]	0			0			0			0		

Intersection Settings

Cycle Length [s]	100
Lost time [s]	10.00

Phasing & Timing

Control Type	Split	Split	Split	Split	Split	Split	Protecte	Permiss	Permiss	Protecte	Permiss	Permiss
Signal group	0	2	0	0	6	0	3	8	0	7	4	0
Auxiliary Signal Groups												
Lead / Lag	-	-	-	-	-	-	Lead	-	-	Lead	-	-

Movement, Approach, & Intersection Results

V/C, Movement V/C Ratio	0.02	0.02	0.01	0.00	0.01	0.01	0.01	0.22	0.08	0.05	0.03	0.00
Intersection LOS	A											
Intersection V/C	0.399											

Intersection Level Of Service Report
Intersection 11: Irwindale Avenue (NS) at I-210 WB Ramps (EW)

Control Type:	Signalized	Delay (sec / veh):	-
Analysis Method:	ICU 1	Level Of Service:	A
Analysis Period:	15 minutes	Volume to Capacity (v/c):	0.595

Intersection Setup

Name	Irwindale Avenue				I-210 WB Ramps	
Approach	Northbound		Southbound		Westbound	
Lane Configuration						
Turning Movement	Thru	Right	Left	Thru	Left	Right
Lane Width [ft]	12.00	12.00	12.00	12.00	12.00	12.00
No. of Lanes in Pocket	0	0	0	0	0	0
Pocket Length [ft]	100.00	100.00	100.00	100.00	100.00	100.00
Speed [mph]	35.00		35.00		35.00	
Grade [%]	0.00		0.00		0.00	
Crosswalk	No		No		Yes	

Volumes

Name	Irwindale Avenue				I-210 WB Ramps	
Base Volume Input [veh/h]	826	0	0	1049	281	169
Base Volume Adjustment Factor	1.0000	1.0000	1.0000	1.0000	1.0000	1.0000
Heavy Vehicles Percentage [%]	2.00	2.00	2.00	2.00	2.00	2.00
Growth Rate	1.01	1.00	1.00	1.01	1.01	1.01
In-Process Volume [veh/h]	0	0	0	0	0	0
Site-Generated Trips [veh/h]	301	0	0	223	85	188
Diverted Trips [veh/h]	0	0	0	0	0	0
Pass-by Trips [veh/h]	0	0	0	0	0	0
Existing Site Adjustment Volume [veh/h]	0	0	0	0	0	0
Other Volume [veh/h]	0	0	0	0	0	0
Total Hourly Volume [veh/h]	1135	0	0	1282	369	359
Peak Hour Factor	1.0000	1.0000	1.0000	1.0000	1.0000	1.0000
Other Adjustment Factor	1.0000	1.0000	1.0000	1.0000	1.0000	1.0000
Total 15-Minute Volume [veh/h]	284	0	0	321	92	90
Total Analysis Volume [veh/h]	1135	0	0	1282	369	359
Pedestrian Volume [ped/h]	0		0		0	
Bicycle Volume [bicycles/h]	0		0		0	

Intersection Settings

Cycle Length [s]	100
Lost time [s]	10.00

Phasing & Timing

Control Type	Permissive	Permissive	Permissive	Permissive	Split	Split
Signal group	2	0	0	6	7	0
Auxiliary Signal Groups						
Lead / Lag	-	-	-	-	Lead	-

Movement, Approach, & Intersection Results

V/C, Movement V/C Ratio	0.24	0.00	0.00	0.27	0.12	0.23
Intersection LOS	A					
Intersection V/C	0.595					

Intersection Level Of Service Report
Intersection 12: Irwindale Avenue (NS) at I-210 EB Ramps (EW)

Control Type:	Signalized	Delay (sec / veh):	-
Analysis Method:	ICU 1	Level Of Service:	D
Analysis Period:	15 minutes	Volume to Capacity (v/c):	0.814

Intersection Setup

Name	Irwindale Avenue			Irwindale Avenue			I-210 EB Ramps			I-210 EB Ramps		
Approach	Northbound			Southbound			Eastbound			Westbound		
Lane Configuration												
Turning Movement	Left	Thru	Right	Left	Thru	Right	Left	Thru	Right	Left	Thru	Right
Lane Width [ft]	12.00	12.00	12.00	12.00	12.00	12.00	12.00	12.00	12.00	12.00	12.00	12.00
No. of Lanes in Pocket	0	0	1	1	0	0	0	0	0	0	0	0
Pocket Length [ft]	100.00	100.00	505.00	330.00	100.00	100.00	100.00	100.00	100.00	100.00	100.00	100.00
Speed [mph]	35.00			35.00			35.00			35.00		
Grade [%]	0.00			0.00			0.00			0.00		
Crosswalk	No			No			No			Yes		

Volumes

Name	Irwindale Avenue			Irwindale Avenue			I-210 EB Ramps			I-210 EB Ramps		
Base Volume Input [veh/h]	0	829	235	167	595	0	444	0	748	0	0	0
Base Volume Adjustment Factor	1.0000	1.0000	1.0000	1.0000	1.0000	1.0000	1.0000	1.0000	1.0000	1.0000	1.0000	1.0000
Heavy Vehicles Percentage [%]	2.00	2.00	2.00	2.00	2.00	2.00	2.00	2.00	2.00	2.00	2.00	2.00
Growth Rate	1.00	1.01	1.01	1.01	1.01	1.00	1.01	1.00	1.01	1.00	1.00	1.00
In-Process Volume [veh/h]	0	0	0	0	0	0	0	0	0	0	0	0
Site-Generated Trips [veh/h]	0	71	18	79	101	0	268	0	180	0	0	0
Diverted Trips [veh/h]	0	0	0	0	0	0	0	0	0	0	0	0
Pass-by Trips [veh/h]	0	0	0	0	0	0	0	0	0	0	0	0
Existing Site Adjustment Volume [veh/h]	0	0	0	0	0	0	0	0	0	0	0	0
Other Volume [veh/h]	0	0	0	0	0	0	0	0	0	0	0	0
Total Hourly Volume [veh/h]	0	908	255	248	702	0	716	0	935	0	0	0
Peak Hour Factor	1.0000	1.0000	1.0000	1.0000	1.0000	1.0000	1.0000	1.0000	1.0000	1.0000	1.0000	1.0000
Other Adjustment Factor	1.0000	1.0000	1.0000	1.0000	1.0000	1.0000	1.0000	1.0000	1.0000	1.0000	1.0000	1.0000
Total 15-Minute Volume [veh/h]	0	227	64	62	176	0	179	0	234	0	0	0
Total Analysis Volume [veh/h]	0	908	255	248	702	0	716	0	935	0	0	0
Pedestrian Volume [ped/h]	0			0			0			0		
Bicycle Volume [bicycles/h]	0			0			0			0		

Intersection Settings

Cycle Length [s]	100
Lost time [s]	10.00

Phasing & Timing

Control Type	Permiss	Permiss	Permiss	Protecte	Permiss	Permiss	Split	Permiss	Split	Permiss	Permiss	Permiss
Signal group	0	2	0	1	6	0	3	0	0	0	0	0
Auxiliary Signal Groups												
Lead / Lag	-	-	-	Lead	-	-	Lead	-	-	-	-	-

Movement, Approach, & Intersection Results

V/C, Movement V/C Ratio	0.00	0.28	0.16	0.08	0.22	0.00	0.22	0.00	0.34	0.00	0.00	0.00
Intersection LOS	D											
Intersection V/C	0.814											

Intersection Level Of Service Report

Intersection 13: Irwindale Avenue (NS) at Jardin De Roca/Irwindale Rd (EW)

Control Type:	Signalized	Delay (sec / veh):	-
Analysis Method:	ICU 1	Level Of Service:	B
Analysis Period:	15 minutes	Volume to Capacity (v/c):	0.666

Intersection Setup

Name	Irwindale Avenue			Irwindale Avenue			Jardin De Roca			Irwindale Road		
Approach	Northbound			Southbound			Eastbound			Westbound		
Lane Configuration												
Turning Movement	Left	Thru	Right	Left	Thru	Right	Left	Thru	Right	Left	Thru	Right
Lane Width [ft]	12.00	12.00	12.00	12.00	12.00	12.00	12.00	12.00	12.00	12.00	12.00	12.00
No. of Lanes in Pocket	1	0	1	1	0	0	0	0	0	0	0	0
Pocket Length [ft]	130.00	100.00	180.00	245.00	100.00	100.00	100.00	100.00	100.00	100.00	100.00	100.00
Speed [mph]	35.00			35.00			25.00			25.00		
Grade [%]	0.00			0.00			0.00			0.00		
Crosswalk	No			No			No			Yes		

Volumes

Name	Irwindale Avenue			Irwindale Avenue			Jardin De Roca			Irwindale Road		
Base Volume Input [veh/h]	53	1015	115	168	1133	41	10	0	13	24	0	35
Base Volume Adjustment Factor	1.0000	1.0000	1.0000	1.0000	1.0000	1.0000	1.0000	1.0000	1.0000	1.0000	1.0000	1.0000
Heavy Vehicles Percentage [%]	2.00	2.00	2.00	2.00	2.00	2.00	2.00	2.00	2.00	2.00	2.00	2.00
Growth Rate	1.01	1.01	1.01	1.01	1.01	1.01	1.01	1.00	1.01	1.01	1.00	1.01
In-Process Volume [veh/h]	0	0	0	0	0	0	0	0	0	0	0	0
Site-Generated Trips [veh/h]	0	63	12	94	187	0	0	0	0	2	0	26
Diverted Trips [veh/h]	0	0	0	0	0	0	0	0	0	0	0	0
Pass-by Trips [veh/h]	0	0	0	0	0	0	0	0	0	0	0	0
Existing Site Adjustment Volume [veh/h]	0	0	0	0	0	0	0	0	0	0	0	0
Other Volume [veh/h]	0	0	0	0	0	0	0	0	0	0	0	0
Total Hourly Volume [veh/h]	54	1088	128	264	1331	41	10	0	13	26	0	61
Peak Hour Factor	1.0000	1.0000	1.0000	1.0000	1.0000	1.0000	1.0000	1.0000	1.0000	1.0000	1.0000	1.0000
Other Adjustment Factor	1.0000	1.0000	1.0000	1.0000	1.0000	1.0000	1.0000	1.0000	1.0000	1.0000	1.0000	1.0000
Total 15-Minute Volume [veh/h]	14	272	32	66	333	10	3	0	3	7	0	15
Total Analysis Volume [veh/h]	54	1088	128	264	1331	41	10	0	13	26	0	61
Pedestrian Volume [ped/h]	0			0			0			0		
Bicycle Volume [bicycles/h]	0			0			0			0		

Intersection Settings

Cycle Length [s]	100
Lost time [s]	10.00

Phasing & Timing

Control Type	Protecte	Permiss	Permiss	Protecte	Permiss	Permiss	Permiss	Permiss	Permiss	Permiss	Permiss	Permiss
Signal group	5	2	0	1	6	0	3	0	0	7	0	0
Auxiliary Signal Groups												
Lead / Lag	Lead	-	-	Lead	-	-	Lead	-	-	Lead	-	-

Movement, Approach, & Intersection Results

V/C, Movement V/C Ratio	0.03	0.34	0.08	0.17	0.42	0.03	0.01	0.00	0.01	0.02	0.00	0.08
Intersection LOS	B											
Intersection V/C	0.666											

Intersection Level Of Service Report

Intersection 14: Irwindale Avenue (NS) at 1st Street (EW)

Control Type:	Signalized	Delay (sec / veh):	-
Analysis Method:	ICU 1	Level Of Service:	A
Analysis Period:	15 minutes	Volume to Capacity (v/c):	0.530

Intersection Setup

Name	Irwindale Avenue			Irwindale Avenue			1st Street			1st Street		
Approach	Northbound			Southbound			Eastbound			Westbound		
Lane Configuration												
Turning Movement	Left	Thru	Right	Left	Thru	Right	Left	Thru	Right	Left	Thru	Right
Lane Width [ft]	12.00	12.00	12.00	12.00	12.00	12.00	12.00	12.00	12.00	12.00	12.00	12.00
No. of Lanes in Pocket	1	0	1	1	0	1	1	0	1	1	0	1
Pocket Length [ft]	100.00	100.00	70.00	120.00	100.00	240.00	90.00	100.00	95.00	75.00	100.00	75.00
Speed [mph]	35.00			35.00			35.00			25.00		
Grade [%]	0.00			0.00			0.00			0.00		
Crosswalk	Yes			No			Yes			Yes		

Volumes

Name	Irwindale Avenue			Irwindale Avenue			1st Street			1st Street		
Base Volume Input [veh/h]	38	1187	4	14	827	130	54	0	21	0	0	8
Base Volume Adjustment Factor	1.0000	1.0000	1.0000	1.0000	1.0000	1.0000	1.0000	1.0000	1.0000	1.0000	1.0000	1.0000
Heavy Vehicles Percentage [%]	2.00	2.00	2.00	2.00	2.00	2.00	2.00	2.00	2.00	2.00	2.00	2.00
Growth Rate	1.01	1.01	1.01	1.01	1.01	1.01	1.01	1.01	1.01	1.01	1.01	1.01
In-Process Volume [veh/h]	0	0	0	0	0	0	0	0	0	0	0	0
Site-Generated Trips [veh/h]	6	65	0	0	136	53	10	0	0	0	0	0
Diverted Trips [veh/h]	0	0	0	0	0	0	0	0	0	0	0	0
Pass-by Trips [veh/h]	0	0	0	0	0	0	0	0	0	0	0	0
Existing Site Adjustment Volume [veh/h]	0	0	0	0	0	0	0	0	0	0	0	0
Other Volume [veh/h]	0	0	0	0	0	0	0	0	0	0	0	0
Total Hourly Volume [veh/h]	44	1264	4	14	971	184	65	0	21	0	0	8
Peak Hour Factor	1.0000	1.0000	1.0000	1.0000	1.0000	1.0000	1.0000	1.0000	1.0000	1.0000	1.0000	1.0000
Other Adjustment Factor	1.0000	1.0000	1.0000	1.0000	1.0000	1.0000	1.0000	1.0000	1.0000	1.0000	1.0000	1.0000
Total 15-Minute Volume [veh/h]	11	316	1	4	243	46	16	0	5	0	0	2
Total Analysis Volume [veh/h]	44	1264	4	14	971	184	65	0	21	0	0	8
Pedestrian Volume [ped/h]	0			0			0			0		
Bicycle Volume [bicycles/h]	0			0			0			0		

Intersection Settings

Cycle Length [s]	100
Lost time [s]	10.00

Phasing & Timing

Control Type	Permiss	Permiss	Permiss	Permiss	Permiss	Permiss	Split	Split	Split	Split	Split	Split
Signal group	0	2	0	0	6	0	0	8	0	0	4	0
Auxiliary Signal Groups												
Lead / Lag	-	-	-	-	-	-	-	-	-	-	-	-

Movement, Approach, & Intersection Results

V/C, Movement V/C Ratio	0.03	0.40	0.40	0.01	0.20	0.12	0.02	0.00	0.01	0.00	0.00	0.01
Intersection LOS	A											
Intersection V/C	0.530											

Intersection Level Of Service Report
Intersection 15: Irwindale Avenue (NS) at Gladstone Street (EW)

Control Type:	Signalized	Delay (sec / veh):	-
Analysis Method:	ICU 1	Level Of Service:	C
Analysis Period:	15 minutes	Volume to Capacity (v/c):	0.708

Intersection Setup

Name	Irwindale Avenue			Irwindale Avenue			Gladstone Street			Gladstone Street		
Approach	Northbound			Southbound			Eastbound			Westbound		
Lane Configuration												
Turning Movement	Left	Thru	Right	Left	Thru	Right	Left	Thru	Right	Left	Thru	Right
Lane Width [ft]	12.00	12.00	12.00	12.00	12.00	12.00	12.00	12.00	12.00	12.00	12.00	12.00
No. of Lanes in Pocket	1	0	0	2	0	0	1	0	0	1	0	1
Pocket Length [ft]	120.00	100.00	100.00	210.00	100.00	100.00	50.00	100.00	100.00	200.00	100.00	190.00
Speed [mph]	35.00			35.00			25.00			40.00		
Grade [%]	0.00			0.00			0.00			0.00		
Crosswalk	Yes			Yes			Yes			Yes		

Volumes

Name	Irwindale Avenue			Irwindale Avenue			Gladstone Street			Gladstone Street		
Base Volume Input [veh/h]	10	634	67	135	551	6	1	10	22	456	70	680
Base Volume Adjustment Factor	1.0000	1.0000	1.0000	1.0000	1.0000	1.0000	1.0000	1.0000	1.0000	1.0000	1.0000	1.0000
Heavy Vehicles Percentage [%]	2.00	2.00	2.00	2.00	2.00	2.00	2.00	2.00	2.00	2.00	2.00	2.00
Growth Rate	1.01	1.01	1.01	1.01	1.01	1.01	1.01	1.01	1.01	1.01	1.01	1.01
In-Process Volume [veh/h]	0	0	0	0	0	0	0	0	0	0	0	0
Site-Generated Trips [veh/h]	0	49	49	123	13	0	0	0	0	2	0	22
Diverted Trips [veh/h]	0	0	0	0	0	0	0	0	0	0	0	0
Pass-by Trips [veh/h]	0	0	0	0	0	0	0	0	0	0	0	0
Existing Site Adjustment Volume [veh/h]	0	0	0	0	0	0	0	0	0	0	0	0
Other Volume [veh/h]	0	0	0	0	0	0	0	0	0	0	0	0
Total Hourly Volume [veh/h]	10	689	117	259	570	6	1	10	22	463	71	709
Peak Hour Factor	1.0000	1.0000	1.0000	1.0000	1.0000	1.0000	1.0000	1.0000	1.0000	1.0000	1.0000	1.0000
Other Adjustment Factor	1.0000	1.0000	1.0000	1.0000	1.0000	1.0000	1.0000	1.0000	1.0000	1.0000	1.0000	1.0000
Total 15-Minute Volume [veh/h]	3	172	29	65	143	2	0	3	6	116	18	177
Total Analysis Volume [veh/h]	10	689	117	259	570	6	1	10	22	463	71	709
Pedestrian Volume [ped/h]	0			0			0			0		
Bicycle Volume [bicycles/h]	0			0			0			0		

Intersection Settings

Cycle Length [s]	100
Lost time [s]	10.00

Phasing & Timing

Control Type	Protecte	Permiss	Permiss	Protecte	Permiss	Permiss	Permiss	Permiss	Permiss	Permiss	Permiss	Overlap
Signal group	5	2	0	1	6	0	0	8	0	0	4	4
Auxiliary Signal Groups												1,4
Lead / Lag	Lead	-	-	Lead	-	-	-	-	-	-	-	-

Movement, Approach, & Intersection Results

V/C, Movement V/C Ratio	0.01	0.22	0.07	0.08	0.18	0.18	0.00	0.01	0.01	0.29	0.04	0.14
Intersection LOS	C											
Intersection V/C	0.708											

Intersection Level Of Service Report

Intersection 16: Irwindale Avenue (NS) at Arrow Highway (EW)

Control Type:	Signalized	Delay (sec / veh):	-
Analysis Method:	ICU 1	Level Of Service:	D
Analysis Period:	15 minutes	Volume to Capacity (v/c):	0.891

Intersection Setup

Name	Irwindale Avenue			Irwindale Avenue			Arrow Highway			Arrow Highway		
Approach	Northbound			Southbound			Eastbound			Westbound		
Lane Configuration												
Turning Movement	Left	Thru	Right	Left	Thru	Right	Left	Thru	Right	Left	Thru	Right
Lane Width [ft]	12.00	12.00	12.00	12.00	12.00	12.00	12.00	12.00	12.00	12.00	12.00	12.00
No. of Lanes in Pocket	1	0	0	1	0	1	2	0	0	1	0	0
Pocket Length [ft]	175.00	100.00	100.00	185.00	100.00	185.00	205.00	100.00	100.00	335.00	100.00	100.00
Speed [mph]	35.00			35.00			45.00			45.00		
Grade [%]	0.00			0.00			0.00			0.00		
Crosswalk	Yes			Yes			Yes			Yes		

Volumes

Name	Irwindale Avenue			Irwindale Avenue			Arrow Highway			Arrow Highway		
Base Volume Input [veh/h]	163	579	65	98	457	446	277	423	52	67	1022	98
Base Volume Adjustment Factor	1.0000	1.0000	1.0000	1.0000	1.0000	1.0000	1.0000	1.0000	1.0000	1.0000	1.0000	1.0000
Heavy Vehicles Percentage [%]	2.00	2.00	2.00	2.00	2.00	2.00	2.00	2.00	2.00	2.00	2.00	2.00
Growth Rate	1.01	1.01	1.01	1.01	1.01	1.01	1.01	1.01	1.01	1.01	1.01	1.01
In-Process Volume [veh/h]	0	0	0	0	0	0	0	0	0	0	0	0
Site-Generated Trips [veh/h]	9	26	9	2	10	3	56	196	4	2	93	16
Diverted Trips [veh/h]	0	0	0	0	0	0	0	0	0	0	0	0
Pass-by Trips [veh/h]	0	0	0	0	0	0	0	0	0	0	0	0
Existing Site Adjustment Volume [veh/h]	0	0	0	0	0	0	0	0	0	0	0	0
Other Volume [veh/h]	0	0	0	0	0	0	0	0	0	0	0	0
Total Hourly Volume [veh/h]	174	611	75	101	472	453	336	623	57	70	1125	115
Peak Hour Factor	1.0000	1.0000	1.0000	1.0000	1.0000	1.0000	1.0000	1.0000	1.0000	1.0000	1.0000	1.0000
Other Adjustment Factor	1.0000	1.0000	1.0000	1.0000	1.0000	1.0000	1.0000	1.0000	1.0000	1.0000	1.0000	1.0000
Total 15-Minute Volume [veh/h]	44	153	19	25	118	113	84	156	14	18	281	29
Total Analysis Volume [veh/h]	174	611	75	101	472	453	336	623	57	70	1125	115
Pedestrian Volume [ped/h]	0			0			0			0		
Bicycle Volume [bicycles/h]	0			0			0			0		

Intersection Settings

Cycle Length [s]	100
Lost time [s]	10.00

Phasing & Timing

Control Type	Protecte	Permiss	Permiss	Protecte	Permiss	Overlap	Protecte	Permiss	Permiss	Protecte	Permiss	Permiss
Signal group	5	2	0	1	6	6	3	8	0	7	4	0
Auxiliary Signal Groups						3,6						
Lead / Lag	Lead	-	-	Lead	-	-	Lead	-	-	Lead	-	-

Movement, Approach, & Intersection Results

V/C, Movement V/C Ratio	0.11	0.21	0.21	0.06	0.15	0.18	0.11	0.14	0.14	0.04	0.39	0.39
Intersection LOS	D											
Intersection V/C	0.891											

Intersection Level Of Service Report

Intersection 17: Vincent Avenue (NS) at Gladstone Street (EW)

Control Type:	Signalized	Delay (sec / veh):	-
Analysis Method:	ICU 1	Level Of Service:	A
Analysis Period:	15 minutes	Volume to Capacity (v/c):	0.539

Intersection Setup

Name	Vincent Avenue			Vincent Avenue			Gladstone Street			Gladstone Street		
Approach	Northbound			Southbound			Eastbound			Westbound		
Lane Configuration												
Turning Movement	Left	Thru	Right	Left	Thru	Right	Left	Thru	Right	Left	Thru	Right
Lane Width [ft]	12.00	12.00	12.00	12.00	12.00	12.00	12.00	12.00	12.00	12.00	12.00	12.00
No. of Lanes in Pocket	1	0	0	0	0	0	2	0	0	1	0	0
Pocket Length [ft]	195.00	100.00	100.00	100.00	100.00	100.00	230.00	100.00	100.00	175.00	100.00	100.00
Speed [mph]	45.00			25.00			45.00			45.00		
Grade [%]	0.00			0.00			0.00			0.00		
Crosswalk	Yes			Yes			No			Yes		

Volumes

Name	Vincent Avenue			Vincent Avenue			Gladstone Street			Gladstone Street		
Base Volume Input [veh/h]	265	29	147	16	8	38	43	97	64	178	942	2
Base Volume Adjustment Factor	1.0000	1.0000	1.0000	1.0000	1.0000	1.0000	1.0000	1.0000	1.0000	1.0000	1.0000	1.0000
Heavy Vehicles Percentage [%]	2.00	2.00	2.00	2.00	2.00	2.00	2.00	2.00	2.00	2.00	2.00	2.00
Growth Rate	1.01	1.01	1.01	1.01	1.01	1.01	1.01	1.01	1.01	1.01	1.01	1.01
In-Process Volume [veh/h]	0	0	0	0	0	0	0	0	0	0	0	0
Site-Generated Trips [veh/h]	13	0	18	0	0	0	0	4	168	130	11	0
Diverted Trips [veh/h]	0	0	0	0	0	0	0	0	0	0	0	0
Pass-by Trips [veh/h]	0	0	0	0	0	0	0	0	0	0	0	0
Existing Site Adjustment Volume [veh/h]	0	0	0	0	0	0	0	0	0	0	0	0
Other Volume [veh/h]	0	0	0	0	0	0	0	0	0	0	0	0
Total Hourly Volume [veh/h]	281	29	166	16	8	38	43	102	233	310	962	2
Peak Hour Factor	1.0000	1.0000	1.0000	1.0000	1.0000	1.0000	1.0000	1.0000	1.0000	1.0000	1.0000	1.0000
Other Adjustment Factor	1.0000	1.0000	1.0000	1.0000	1.0000	1.0000	1.0000	1.0000	1.0000	1.0000	1.0000	1.0000
Total 15-Minute Volume [veh/h]	70	7	42	4	2	10	11	26	58	78	241	1
Total Analysis Volume [veh/h]	281	29	166	16	8	38	43	102	233	310	962	2
Pedestrian Volume [ped/h]	0			0			0			0		
Bicycle Volume [bicycles/h]	0			0			0			0		

Intersection Settings

Cycle Length [s]	100
Lost time [s]	10.00

Phasing & Timing

Control Type	Split	Split	Split	Split	Split	Split	Protecte	Permiss	Permiss	Protecte	Permiss	Permiss
Signal group	0	2	0	0	6	0	3	8	0	7	4	0
Auxiliary Signal Groups												
Lead / Lag	-	-	-	-	-	-	Lead	-	-	Lead	-	-

Movement, Approach, & Intersection Results

V/C, Movement V/C Ratio	0.09	0.10	0.10	0.01	0.03	0.03	0.01	0.10	0.10	0.19	0.30	0.30
Intersection LOS	A											
Intersection V/C	0.539											

Intersection Level Of Service Report

Intersection 18: Vincent Avenue (NS) at Arrow Highway (EW)

Control Type:	Signalized	Delay (sec / veh):	-
Analysis Method:	ICU 1	Level Of Service:	D
Analysis Period:	15 minutes	Volume to Capacity (v/c):	0.838

Intersection Setup

Name	Vincent Avenue			Vincent Avenue			Arrow Highway			Arrow Highway		
Approach	Northbound			Southbound			Eastbound			Westbound		
Lane Configuration												
Turning Movement	Left	Thru	Right	Left	Thru	Right	Left	Thru	Right	Left	Thru	Right
Lane Width [ft]	12.00	12.00	12.00	12.00	12.00	12.00	12.00	12.00	12.00	12.00	12.00	12.00
No. of Lanes in Pocket	1	0	0	1	0	0	1	0	0	1	0	0
Pocket Length [ft]	200.00	100.00	100.00	200.00	100.00	100.00	215.00	100.00	100.00	160.00	100.00	100.00
Speed [mph]	45.00			45.00			45.00			45.00		
Grade [%]	0.00			0.00			0.00			0.00		
Crosswalk	Yes			Yes			Yes			Yes		

Volumes

Name	Vincent Avenue			Vincent Avenue			Arrow Highway			Arrow Highway		
Base Volume Input [veh/h]	161	285	88	22	189	65	58	378	88	138	1150	89
Base Volume Adjustment Factor	1.0000	1.0000	1.0000	1.0000	1.0000	1.0000	1.0000	1.0000	1.0000	1.0000	1.0000	1.0000
Heavy Vehicles Percentage [%]	2.00	2.00	2.00	2.00	2.00	2.00	2.00	2.00	2.00	2.00	2.00	2.00
Growth Rate	1.01	1.01	1.01	1.01	1.01	1.01	1.01	1.01	1.01	1.01	1.01	1.01
In-Process Volume [veh/h]	0	0	0	0	0	0	0	0	0	0	0	0
Site-Generated Trips [veh/h]	55	38	5	2	171	103	32	23	152	27	49	4
Diverted Trips [veh/h]	0	0	0	0	0	0	0	0	0	0	0	0
Pass-by Trips [veh/h]	0	0	0	0	0	0	0	0	0	0	0	0
Existing Site Adjustment Volume [veh/h]	0	0	0	0	0	0	0	0	0	0	0	0
Other Volume [veh/h]	0	0	0	0	0	0	0	0	0	0	0	0
Total Hourly Volume [veh/h]	218	326	94	24	362	169	91	405	241	166	1211	94
Peak Hour Factor	1.0000	1.0000	1.0000	1.0000	1.0000	1.0000	1.0000	1.0000	1.0000	1.0000	1.0000	1.0000
Other Adjustment Factor	1.0000	1.0000	1.0000	1.0000	1.0000	1.0000	1.0000	1.0000	1.0000	1.0000	1.0000	1.0000
Total 15-Minute Volume [veh/h]	55	82	24	6	91	42	23	101	60	42	303	24
Total Analysis Volume [veh/h]	218	326	94	24	362	169	91	405	241	166	1211	94
Pedestrian Volume [ped/h]	0			0			0			0		
Bicycle Volume [bicycles/h]	0			0			0			0		

Intersection Settings

Cycle Length [s]	100
Lost time [s]	10.00

Phasing & Timing

Control Type	Permiss	Permiss	Permiss	Permiss	Permiss	Permiss	Permiss	Permiss	Permiss	Permiss	Permiss	Permiss
Signal group	0	2	0	0	6	0	0	8	0	0	4	0
Auxiliary Signal Groups												
Lead / Lag	-	-	-	-	-	-	-	-	-	-	-	-

Movement, Approach, & Intersection Results

V/C, Movement V/C Ratio	0.14	0.13	0.13	0.02	0.17	0.17	0.06	0.13	0.15	0.10	0.38	0.06
Intersection LOS	D											
Intersection V/C	0.838											

Intersection Level Of Service Report
Intersection 19: Vincent Avenue (NS) at Project North Driveway (EW)

Control Type:	Two-way stop	Delay (sec / veh):	15.0
Analysis Method:	HCM 6th Edition	Level Of Service:	B
Analysis Period:	15 minutes	Volume to Capacity (v/c):	0.062

Intersection Setup

Name	Vincent Avenue		Vincent Avenue		Project North Driveway	
Approach	Northbound		Southbound		Eastbound	
Lane Configuration						
Turning Movement	Left	Thru	Thru	Right	Left	Right
Lane Width [ft]	12.00	12.00	12.00	12.00	12.00	12.00
No. of Lanes in Pocket	0	0	0	0	0	0
Pocket Length [ft]	100.00	100.00	100.00	100.00	100.00	100.00
Speed [mph]	45.00		45.00		15.00	
Grade [%]	0.00		0.00		0.00	
Crosswalk	No		No		No	

Volumes

Name	Vincent Avenue		Vincent Avenue		Project North Driveway	
Base Volume Input [veh/h]	0	534	534	0	0	0
Base Volume Adjustment Factor	1.0000	1.0000	1.0000	1.0000	1.0000	1.0000
Heavy Vehicles Percentage [%]	2.00	2.00	2.00	2.00	2.00	2.00
Growth Rate	1.00	1.01	1.01	1.00	1.00	1.00
In-Process Volume [veh/h]	0	0	0	0	0	0
Site-Generated Trips [veh/h]	34	74	171	179	24	5
Diverted Trips [veh/h]	0	0	0	0	0	0
Pass-by Trips [veh/h]	0	0	0	0	0	0
Existing Site Adjustment Volume [veh/h]	0	0	0	0	0	0
Other Volume [veh/h]	0	0	0	0	0	0
Total Hourly Volume [veh/h]	34	613	710	179	24	5
Peak Hour Factor	1.0000	1.0000	1.0000	1.0000	1.0000	1.0000
Other Adjustment Factor	1.0000	1.0000	1.0000	1.0000	1.0000	1.0000
Total 15-Minute Volume [veh/h]	9	153	178	45	6	1
Total Analysis Volume [veh/h]	34	613	710	179	24	5
Pedestrian Volume [ped/h]	0		0		0	

Intersection Settings

Priority Scheme	Free	Free	Stop
Flared Lane			
Storage Area [veh]	0	0	0
Two-Stage Gap Acceptance			Yes
Number of Storage Spaces in Median	0	0	2

Movement, Approach, & Intersection Results

V/C, Movement V/C Ratio	0.04	0.01	0.01	0.00	0.06	0.01
d_M, Delay for Movement [s/veh]	9.97	0.00	0.00	0.00	14.96	10.66
Movement LOS	A	A	A	A	B	B
95th-Percentile Queue Length [veh/ln]	0.14	0.00	0.00	0.00	0.20	0.02
95th-Percentile Queue Length [ft/ln]	3.52	0.00	0.00	0.00	4.96	0.59
d_A, Approach Delay [s/veh]	0.52		0.00		14.21	
Approach LOS	A		A		B	
d_I, Intersection Delay [s/veh]	0.48					
Intersection LOS	B					

Intersection Level Of Service Report
Intersection 20: Vincent Avenue (NS) at Project South Driveway (EW)

Control Type:	Two-way stop	Delay (sec / veh):	13.1
Analysis Method:	HCM 6th Edition	Level Of Service:	B
Analysis Period:	15 minutes	Volume to Capacity (v/c):	0.045

Intersection Setup

Name	Vincent Avenue		Vincent Avenue		Project South Driveway	
Approach	Northbound		Southbound		Eastbound	
Lane Configuration						
Turning Movement	Left	Thru	Thru	Right	Left	Right
Lane Width [ft]	12.00	12.00	12.00	12.00	12.00	12.00
No. of Lanes in Pocket	0	0	0	0	0	0
Pocket Length [ft]	100.00	100.00	100.00	100.00	100.00	100.00
Speed [mph]	45.00		45.00		15.00	
Grade [%]	0.00		0.00		0.00	
Crosswalk	No		No		No	

Volumes

Name	Vincent Avenue		Vincent Avenue		Project South Driveway	
Base Volume Input [veh/h]	0	534	412	0	0	0
Base Volume Adjustment Factor	1.0000	1.0000	1.0000	1.0000	1.0000	1.0000
Heavy Vehicles Percentage [%]	2.00	2.00	2.00	2.00	2.00	2.00
Growth Rate	1.00	1.01	1.01	1.00	1.00	1.00
In-Process Volume [veh/h]	0	0	0	0	0	0
Site-Generated Trips [veh/h]	58	87	21	155	21	8
Diverted Trips [veh/h]	0	0	0	0	0	0
Pass-by Trips [veh/h]	0	0	0	0	0	0
Existing Site Adjustment Volume [veh/h]	0	0	0	0	0	0
Other Volume [veh/h]	0	0	0	0	0	0
Total Hourly Volume [veh/h]	58	626	437	155	21	8
Peak Hour Factor	1.0000	1.0000	1.0000	1.0000	1.0000	1.0000
Other Adjustment Factor	1.0000	1.0000	1.0000	1.0000	1.0000	1.0000
Total 15-Minute Volume [veh/h]	15	157	109	39	5	2
Total Analysis Volume [veh/h]	58	626	437	155	21	8
Pedestrian Volume [ped/h]	0		0		0	

Intersection Settings

Priority Scheme	Free	Free	Stop
Flared Lane			
Storage Area [veh]	0	0	0
Two-Stage Gap Acceptance			Yes
Number of Storage Spaces in Median	0	0	2

Movement, Approach, & Intersection Results

V/C, Movement V/C Ratio	0.06	0.01	0.00	0.00	0.04	0.01
d_M, Delay for Movement [s/veh]	8.91	0.00	0.00	0.00	13.05	9.63
Movement LOS	A	A	A	A	B	A
95th-Percentile Queue Length [veh/ln]	0.19	0.00	0.00	0.00	0.14	0.03
95th-Percentile Queue Length [ft/ln]	4.71	0.00	0.00	0.00	3.51	0.77
d_A, Approach Delay [s/veh]	0.76		0.00		12.11	
Approach LOS	A		A		B	
d_I, Intersection Delay [s/veh]	0.66					
Intersection LOS	B					

Intersection Level Of Service Report

Intersection 21: Vincent Avenue (NS) at Cypress Street (EW)

Control Type:	Signalized	Delay (sec / veh):	-
Analysis Method:	ICU 1	Level Of Service:	B
Analysis Period:	15 minutes	Volume to Capacity (v/c):	0.673

Intersection Setup

Name	Vincent Avenue			Vincent Avenue			Cypress Street			Cypress Street		
Approach	Northbound			Southbound			Eastbound			Westbound		
Lane Configuration												
Turning Movement	Left	Thru	Right	Left	Thru	Right	Left	Thru	Right	Left	Thru	Right
Lane Width [ft]	12.00	12.00	12.00	12.00	12.00	12.00	12.00	12.00	12.00	12.00	12.00	12.00
No. of Lanes in Pocket	1	0	0	1	0	0	1	0	0	1	0	0
Pocket Length [ft]	120.00	100.00	100.00	120.00	100.00	100.00	100.00	100.00	100.00	150.00	100.00	100.00
Speed [mph]	40.00			45.00			40.00			40.00		
Grade [%]	0.00			0.00			0.00			0.00		
Crosswalk	Yes			Yes			Yes			Yes		

Volumes

Name	Vincent Avenue			Vincent Avenue			Cypress Street			Cypress Street		
Base Volume Input [veh/h]	162	467	125	65	398	71	34	303	50	190	792	78
Base Volume Adjustment Factor	1.0000	1.0000	1.0000	1.0000	1.0000	1.0000	1.0000	1.0000	1.0000	1.0000	1.0000	1.0000
Heavy Vehicles Percentage [%]	2.00	2.00	2.00	2.00	2.00	2.00	2.00	2.00	2.00	2.00	2.00	2.00
Growth Rate	1.01	1.01	1.01	1.01	1.01	1.01	1.01	1.01	1.01	1.01	1.01	1.01
In-Process Volume [veh/h]	0	0	0	0	0	0	0	0	0	0	0	0
Site-Generated Trips [veh/h]	0	126	0	2	26	1	9	0	0	0	0	10
Diverted Trips [veh/h]	0	0	0	0	0	0	0	0	0	0	0	0
Pass-by Trips [veh/h]	0	0	0	0	0	0	0	0	0	0	0	0
Existing Site Adjustment Volume [veh/h]	0	0	0	0	0	0	0	0	0	0	0	0
Other Volume [veh/h]	0	0	0	0	0	0	0	0	0	0	0	0
Total Hourly Volume [veh/h]	164	598	126	68	428	73	43	306	51	192	800	89
Peak Hour Factor	1.0000	1.0000	1.0000	1.0000	1.0000	1.0000	1.0000	1.0000	1.0000	1.0000	1.0000	1.0000
Other Adjustment Factor	1.0000	1.0000	1.0000	1.0000	1.0000	1.0000	1.0000	1.0000	1.0000	1.0000	1.0000	1.0000
Total 15-Minute Volume [veh/h]	41	150	32	17	107	18	11	77	13	48	200	22
Total Analysis Volume [veh/h]	164	598	126	68	428	73	43	306	51	192	800	89
Pedestrian Volume [ped/h]	0			0			0			0		
Bicycle Volume [bicycles/h]	0			0			0			0		

Intersection Settings

Cycle Length [s]	100
Lost time [s]	10.00

Phasing & Timing

Control Type	Permiss	Permiss	Permiss	Permiss	Permiss	Permiss	Permiss	Permiss	Permiss	Permiss	Permiss	Permiss
Signal group	0	2	0	0	6	0	0	8	0	0	4	0
Auxiliary Signal Groups												
Lead / Lag	-	-	-	-	-	-	-	-	-	-	-	-

Movement, Approach, & Intersection Results

V/C, Movement V/C Ratio	0.10	0.23	0.23	0.04	0.16	0.16	0.03	0.11	0.11	0.12	0.28	0.28
Intersection LOS	B											
Intersection V/C	0.673											

Intersection Level Of Service Report

Intersection 22: Vincent Avenue (NS) at San Bernardino Road (EW)

Control Type:	Signalized	Delay (sec / veh):	-
Analysis Method:	ICU 1	Level Of Service:	B
Analysis Period:	15 minutes	Volume to Capacity (v/c):	0.663

Intersection Setup

Name	Vincent Avenue			Vincent Avenue			San Bernardino Road			San Berardino Road		
Approach	Northbound			Southbound			Eastbound			Westbound		
Lane Configuration												
Turning Movement	Left	Thru	Right	Left	Thru	Right	Left	Thru	Right	Left	Thru	Right
Lane Width [ft]	12.00	12.00	12.00	12.00	12.00	12.00	12.00	12.00	12.00	12.00	12.00	12.00
No. of Lanes in Pocket	1	0	0	1	0	0	1	0	0	1	0	0
Pocket Length [ft]	120.00	100.00	100.00	150.00	100.00	100.00	150.00	100.00	100.00	165.00	100.00	100.00
Speed [mph]	35.00			40.00			40.00			40.00		
Grade [%]	0.00			0.00			0.00			0.00		
Crosswalk	Yes			Yes			Yes			Yes		

Volumes

Name	Vincent Avenue			Vincent Avenue			San Bernardino Road			San Berardino Road		
Base Volume Input [veh/h]	106	546	50	70	556	99	82	330	67	99	597	131
Base Volume Adjustment Factor	1.0000	1.0000	1.0000	1.0000	1.0000	1.0000	1.0000	1.0000	1.0000	1.0000	1.0000	1.0000
Heavy Vehicles Percentage [%]	2.00	2.00	2.00	2.00	2.00	2.00	2.00	2.00	2.00	2.00	2.00	2.00
Growth Rate	1.01	1.01	1.01	1.01	1.01	1.01	1.01	1.01	1.01	1.01	1.01	1.01
In-Process Volume [veh/h]	0	0	0	0	0	0	0	0	0	0	0	0
Site-Generated Trips [veh/h]	0	126	0	0	26	0	0	0	0	0	0	0
Diverted Trips [veh/h]	0	0	0	0	0	0	0	0	0	0	0	0
Pass-by Trips [veh/h]	0	0	0	0	0	0	0	0	0	0	0	0
Existing Site Adjustment Volume [veh/h]	0	0	0	0	0	0	0	0	0	0	0	0
Other Volume [veh/h]	0	0	0	0	0	0	0	0	0	0	0	0
Total Hourly Volume [veh/h]	107	677	51	71	588	100	83	333	68	100	603	132
Peak Hour Factor	1.0000	1.0000	1.0000	1.0000	1.0000	1.0000	1.0000	1.0000	1.0000	1.0000	1.0000	1.0000
Other Adjustment Factor	1.0000	1.0000	1.0000	1.0000	1.0000	1.0000	1.0000	1.0000	1.0000	1.0000	1.0000	1.0000
Total 15-Minute Volume [veh/h]	27	169	13	18	147	25	21	83	17	25	151	33
Total Analysis Volume [veh/h]	107	677	51	71	588	100	83	333	68	100	603	132
Pedestrian Volume [ped/h]	0			0			0			0		
Bicycle Volume [bicycles/h]	0			0			0			0		

Intersection Settings

Cycle Length [s]	100
Lost time [s]	10.00

Phasing & Timing

Control Type	Permiss	Permiss	Permiss	Permiss	Permiss	Permiss	Protecte	Permiss	Permiss	Protecte	Permiss	Permiss
Signal group	0	2	0	0	6	0	3	8	0	7	4	0
Auxiliary Signal Groups												
Lead / Lag	-	-	-	-	-	-	Lead	-	-	Lead	-	-

Movement, Approach, & Intersection Results

V/C, Movement V/C Ratio	0.07	0.23	0.23	0.04	0.22	0.22	0.05	0.13	0.13	0.06	0.23	0.23
Intersection LOS	B											
Intersection V/C	0.663											

Intersection Level Of Service Report
Intersection 23: Vincent Avenue (NS) at Badillo Street (EW)

Control Type:	Signalized	Delay (sec / veh):	-
Analysis Method:	ICU 1	Level Of Service:	B
Analysis Period:	15 minutes	Volume to Capacity (v/c):	0.626

Intersection Setup

Name	Vincent Avenue			Vincent Avenue			Dadillo Street			Badillo Street		
Approach	Northbound			Southbound			Eastbound			Westbound		
Lane Configuration												
Turning Movement	Left	Thru	Right	Left	Thru	Right	Left	Thru	Right	Left	Thru	Right
Lane Width [ft]	12.00	12.00	12.00	12.00	12.00	12.00	12.00	12.00	12.00	12.00	12.00	12.00
No. of Lanes in Pocket	1	0	0	1	0	0	1	0	0	1	0	0
Pocket Length [ft]	200.00	100.00	100.00	190.00	100.00	100.00	195.00	100.00	100.00	195.00	100.00	100.00
Speed [mph]	40.00			35.00			45.00			45.00		
Grade [%]	0.00			0.00			0.00			0.00		
Crosswalk	Yes			Yes			Yes			Yes		

Volumes

Name	Vincent Avenue			Vincent Avenue			Dadillo Street			Badillo Street		
Base Volume Input [veh/h]	105	629	177	42	580	121	31	506	113	110	770	88
Base Volume Adjustment Factor	1.0000	1.0000	1.0000	1.0000	1.0000	1.0000	1.0000	1.0000	1.0000	1.0000	1.0000	1.0000
Heavy Vehicles Percentage [%]	2.00	2.00	2.00	2.00	2.00	2.00	2.00	2.00	2.00	2.00	2.00	2.00
Growth Rate	1.01	1.01	1.01	1.01	1.01	1.01	1.01	1.01	1.01	1.01	1.01	1.01
In-Process Volume [veh/h]	0	0	0	0	0	0	0	0	0	0	0	0
Site-Generated Trips [veh/h]	0	93	0	6	19	1	9	0	0	0	0	24
Diverted Trips [veh/h]	0	0	0	0	0	0	0	0	0	0	0	0
Pass-by Trips [veh/h]	0	0	0	0	0	0	0	0	0	0	0	0
Existing Site Adjustment Volume [veh/h]	0	0	0	0	0	0	0	0	0	0	0	0
Other Volume [veh/h]	0	0	0	0	0	0	0	0	0	0	0	0
Total Hourly Volume [veh/h]	106	728	179	48	605	123	40	511	114	111	778	113
Peak Hour Factor	1.0000	1.0000	1.0000	1.0000	1.0000	1.0000	1.0000	1.0000	1.0000	1.0000	1.0000	1.0000
Other Adjustment Factor	1.0000	1.0000	1.0000	1.0000	1.0000	1.0000	1.0000	1.0000	1.0000	1.0000	1.0000	1.0000
Total 15-Minute Volume [veh/h]	27	182	45	12	151	31	10	128	29	28	195	28
Total Analysis Volume [veh/h]	106	728	179	48	605	123	40	511	114	111	778	113
Pedestrian Volume [ped/h]	0			0			0			0		
Bicycle Volume [bicycles/h]	0			0			0			0		

Intersection Settings

Cycle Length [s]	100
Lost time [s]	10.00

Phasing & Timing

Control Type	Protecte	Permiss	Permiss	Protecte	Permiss	Permiss	Protecte	Permiss	Permiss	Protecte	Permiss	Permiss
Signal group	5	2	0	1	6	0	3	8	0	7	4	0
Auxiliary Signal Groups												
Lead / Lag	Lead	-	-	Lead	-	-	Lead	-	-	Lead	-	-

Movement, Approach, & Intersection Results

V/C, Movement V/C Ratio	0.07	0.23	0.11	0.03	0.19	0.08	0.03	0.16	0.07	0.07	0.24	0.07
Intersection LOS	B											
Intersection V/C	0.626											

Intersection Level Of Service Report
Intersection 24: Vincent Avenue (NS) at Puente Avenue (EW)

Control Type:	Signalized	Delay (sec / veh):	-
Analysis Method:	ICU 1	Level Of Service:	B
Analysis Period:	15 minutes	Volume to Capacity (v/c):	0.610

Intersection Setup

Name	Vincent Avenue			Vincent Avenue			Puente Avenue			Puente Avenue		
Approach	Northbound			Southbound			Eastbound			Westbound		
Lane Configuration												
Turning Movement	Left	Thru	Right	Left	Thru	Right	Left	Thru	Right	Left	Thru	Right
Lane Width [ft]	12.00	12.00	12.00	12.00	12.00	12.00	12.00	12.00	12.00	12.00	12.00	12.00
No. of Lanes in Pocket	1	0	0	1	0	0	0	0	0	0	0	0
Pocket Length [ft]	195.00	100.00	100.00	195.00	100.00	100.00	100.00	100.00	100.00	100.00	100.00	100.00
Speed [mph]	40.00			40.00			40.00			40.00		
Grade [%]	0.00			0.00			0.00			0.00		
Crosswalk	Yes			Yes			Yes			Yes		

Volumes

Name	Vincent Avenue			Vincent Avenue			Puente Avenue			Puente Avenue		
Base Volume Input [veh/h]	67	687	31	57	660	69	42	349	66	74	563	96
Base Volume Adjustment Factor	1.0000	1.0000	1.0000	1.0000	1.0000	1.0000	1.0000	1.0000	1.0000	1.0000	1.0000	1.0000
Heavy Vehicles Percentage [%]	2.00	2.00	2.00	2.00	2.00	2.00	2.00	2.00	2.00	2.00	2.00	2.00
Growth Rate	1.01	1.01	1.01	1.01	1.01	1.01	1.01	1.01	1.01	1.01	1.01	1.01
In-Process Volume [veh/h]	0	0	0	0	0	0	0	0	0	0	0	0
Site-Generated Trips [veh/h]	0	93	0	0	19	0	0	0	0	0	0	0
Diverted Trips [veh/h]	0	0	0	0	0	0	0	0	0	0	0	0
Pass-by Trips [veh/h]	0	0	0	0	0	0	0	0	0	0	0	0
Existing Site Adjustment Volume [veh/h]	0	0	0	0	0	0	0	0	0	0	0	0
Other Volume [veh/h]	0	0	0	0	0	0	0	0	0	0	0	0
Total Hourly Volume [veh/h]	68	787	31	58	686	70	42	352	67	75	569	97
Peak Hour Factor	1.0000	1.0000	1.0000	1.0000	1.0000	1.0000	1.0000	1.0000	1.0000	1.0000	1.0000	1.0000
Other Adjustment Factor	1.0000	1.0000	1.0000	1.0000	1.0000	1.0000	1.0000	1.0000	1.0000	1.0000	1.0000	1.0000
Total 15-Minute Volume [veh/h]	17	197	8	15	172	18	11	88	17	19	142	24
Total Analysis Volume [veh/h]	68	787	31	58	686	70	42	352	67	75	569	97
Pedestrian Volume [ped/h]	0			0			0			0		
Bicycle Volume [bicycles/h]	0			0			0			0		

Intersection Settings

Cycle Length [s]	100
Lost time [s]	10.00

Phasing & Timing

Control Type	Permiss	Permiss	Permiss	Permiss	Permiss	Permiss	Permiss	Permiss	Permiss	Permiss	Permiss	Permiss
Signal group	0	2	0	0	6	0	0	8	0	0	4	0
Auxiliary Signal Groups												
Lead / Lag	-	-	-	-	-	-	-	-	-	-	-	-

Movement, Approach, & Intersection Results

V/C, Movement V/C Ratio	0.04	0.25	0.02	0.04	0.21	0.04	0.03	0.12	0.04	0.05	0.20	0.06
Intersection LOS	B											
Intersection V/C	0.610											

Intersection Level Of Service Report

Intersection 25: Vincent Avenue (NS) at Rowland Avenue (EW)

Control Type:	Signalized	Delay (sec / veh):	-
Analysis Method:	ICU 1	Level Of Service:	A
Analysis Period:	15 minutes	Volume to Capacity (v/c):	0.556

Intersection Setup

Name	Vincent Avenue			Vincent Avenue			Rowland Avenue			Rowland Avenue		
Approach	Northbound			Southbound			Eastbound			Westbound		
Lane Configuration												
Turning Movement	Left	Thru	Right	Left	Thru	Right	Left	Thru	Right	Left	Thru	Right
Lane Width [ft]	12.00	12.00	12.00	12.00	12.00	12.00	12.00	12.00	12.00	12.00	12.00	12.00
No. of Lanes in Pocket	1	0	0	1	0	0	0	0	0	0	0	0
Pocket Length [ft]	145.00	100.00	100.00	125.00	100.00	100.00	100.00	100.00	100.00	100.00	100.00	100.00
Speed [mph]	35.00			40.00			35.00			35.00		
Grade [%]	0.00			0.00			0.00			0.00		
Crosswalk	Yes			Yes			Yes			Yes		

Volumes

Name	Vincent Avenue			Vincent Avenue			Rowland Avenue			Rowland Avenue		
Base Volume Input [veh/h]	34	712	55	36	756	12	32	133	41	119	131	62
Base Volume Adjustment Factor	1.0000	1.0000	1.0000	1.0000	1.0000	1.0000	1.0000	1.0000	1.0000	1.0000	1.0000	1.0000
Heavy Vehicles Percentage [%]	2.00	2.00	2.00	2.00	2.00	2.00	2.00	2.00	2.00	2.00	2.00	2.00
Growth Rate	1.01	1.01	1.01	1.01	1.01	1.01	1.01	1.01	1.01	1.01	1.01	1.01
In-Process Volume [veh/h]	0	0	0	0	0	0	0	0	0	0	0	0
Site-Generated Trips [veh/h]	0	71	0	4	13	2	9	0	0	0	0	13
Diverted Trips [veh/h]	0	0	0	0	0	0	0	0	0	0	0	0
Pass-by Trips [veh/h]	0	0	0	0	0	0	0	0	0	0	0	0
Existing Site Adjustment Volume [veh/h]	0	0	0	0	0	0	0	0	0	0	0	0
Other Volume [veh/h]	0	0	0	0	0	0	0	0	0	0	0	0
Total Hourly Volume [veh/h]	34	790	56	40	777	14	41	134	41	120	132	76
Peak Hour Factor	1.0000	1.0000	1.0000	1.0000	1.0000	1.0000	1.0000	1.0000	1.0000	1.0000	1.0000	1.0000
Other Adjustment Factor	1.0000	1.0000	1.0000	1.0000	1.0000	1.0000	1.0000	1.0000	1.0000	1.0000	1.0000	1.0000
Total 15-Minute Volume [veh/h]	9	198	14	10	194	4	10	34	10	30	33	19
Total Analysis Volume [veh/h]	34	790	56	40	777	14	41	134	41	120	132	76
Pedestrian Volume [ped/h]	0			0			0			0		
Bicycle Volume [bicycles/h]	0			0			0			0		

Intersection Settings

Cycle Length [s]	100
Lost time [s]	10.00

Phasing & Timing

Control Type	Protecte	Permiss	Permiss	Protecte	Permiss	Permiss	Permiss	Permiss	Permiss	Permiss	Permiss	Permiss
Signal group	5	2	0	1	6	0	0	8	0	0	4	0
Auxiliary Signal Groups												
Lead / Lag	Lead	-	-	Lead	-	-	-	-	-	-	-	-

Movement, Approach, & Intersection Results

V/C, Movement V/C Ratio	0.02	0.25	0.04	0.03	0.24	0.01	0.03	0.11	0.03	0.08	0.16	0.05
Intersection LOS	A											
Intersection V/C	0.556											

Intersection Level Of Service Report

Intersection 26: Vincent Avenue (NS) at Workman Avenue (EW)

Control Type:	Signalized	Delay (sec / veh):	-
Analysis Method:	ICU 1	Level Of Service:	B
Analysis Period:	15 minutes	Volume to Capacity (v/c):	0.618

Intersection Setup

Name	Vincent Avenue			Vincent Avenue			Workman Avenue			Workman Avenue		
Approach	Northbound			Southbound			Eastbound			Westbound		
Lane Configuration												
Turning Movement	Left	Thru	Right	Left	Thru	Right	Left	Thru	Right	Left	Thru	Right
Lane Width [ft]	12.00	12.00	12.00	12.00	12.00	12.00	12.00	12.00	12.00	12.00	12.00	12.00
No. of Lanes in Pocket	1	0	0	1	0	0	0	0	0	0	0	0
Pocket Length [ft]	120.00	100.00	100.00	180.00	100.00	100.00	100.00	100.00	100.00	100.00	100.00	100.00
Speed [mph]	35.00			40.00			35.00			35.00		
Grade [%]	0.00			0.00			0.00			0.00		
Crosswalk	Yes			Yes			Yes			Yes		

Volumes

Name	Vincent Avenue			Vincent Avenue			Workman Avenue			Workman Avenue		
Base Volume Input [veh/h]	67	675	110	42	816	61	21	137	49	131	188	74
Base Volume Adjustment Factor	1.0000	1.0000	1.0000	1.0000	1.0000	1.0000	1.0000	1.0000	1.0000	1.0000	1.0000	1.0000
Heavy Vehicles Percentage [%]	2.00	2.00	2.00	2.00	2.00	2.00	2.00	2.00	2.00	2.00	2.00	2.00
Growth Rate	1.01	1.01	1.01	1.01	1.01	1.01	1.01	1.01	1.01	1.01	1.01	1.01
In-Process Volume [veh/h]	0	0	0	0	0	0	0	0	0	0	0	0
Site-Generated Trips [veh/h]	0	71	1	0	13	0	0	0	0	0	0	0
Diverted Trips [veh/h]	0	0	0	0	0	0	0	0	0	0	0	0
Pass-by Trips [veh/h]	0	0	0	0	0	0	0	0	0	0	0	0
Existing Site Adjustment Volume [veh/h]	0	0	0	0	0	0	0	0	0	0	0	0
Other Volume [veh/h]	0	0	0	0	0	0	0	0	0	0	0	0
Total Hourly Volume [veh/h]	68	753	112	42	837	62	21	138	49	132	190	75
Peak Hour Factor	1.0000	1.0000	1.0000	1.0000	1.0000	1.0000	1.0000	1.0000	1.0000	1.0000	1.0000	1.0000
Other Adjustment Factor	1.0000	1.0000	1.0000	1.0000	1.0000	1.0000	1.0000	1.0000	1.0000	1.0000	1.0000	1.0000
Total 15-Minute Volume [veh/h]	17	188	28	11	209	16	5	35	12	33	48	19
Total Analysis Volume [veh/h]	68	753	112	42	837	62	21	138	49	132	190	75
Pedestrian Volume [ped/h]	0			0			0			0		
Bicycle Volume [bicycles/h]	0			0			0			0		

Intersection Settings

Cycle Length [s]	100
Lost time [s]	10.00

Phasing & Timing

Control Type	Protecte	Permiss	Permiss	Protecte	Permiss	Permiss	Permiss	Permiss	Permiss	Permiss	Permiss	Permiss
Signal group	5	2	0	1	6	0	0	8	0	0	4	0
Auxiliary Signal Groups												
Lead / Lag	Lead	-	-	Lead	-	-	-	-	-	-	-	-

Movement, Approach, & Intersection Results

V/C, Movement V/C Ratio	0.04	0.24	0.07	0.03	0.26	0.04	0.01	0.10	0.03	0.08	0.20	0.05
Intersection LOS	B											
Intersection V/C	0.618											

Intersection Level Of Service Report
Intersection 27: Vincent Avenue (NS) at I-10 WB Ramps (EW)

Control Type:	Signalized	Delay (sec / veh):	-
Analysis Method:	ICU 1	Level Of Service:	A
Analysis Period:	15 minutes	Volume to Capacity (v/c):	0.469

Intersection Setup

Name	Vincent Avenue		Vincent Avenue		I-10 WB Ramps	
Approach	Northbound		Southbound		Westbound	
Lane Configuration						
Turning Movement	Thru	Right	Left	Thru	Left	Right
Lane Width [ft]	12.00	12.00	12.00	12.00	12.00	12.00
No. of Lanes in Pocket	0	0	0	0	0	1
Pocket Length [ft]	100.00	100.00	100.00	100.00	100.00	220.00
Speed [mph]	35.00		35.00		35.00	
Grade [%]	0.00		0.00		0.00	
Crosswalk	No		No		Yes	

Volumes

Name	Vincent Avenue		Vincent Avenue		I-10 WB Ramps	
Base Volume Input [veh/h]	741	0	0	1011	393	194
Base Volume Adjustment Factor	1.0000	1.0000	1.0000	1.0000	1.0000	1.0000
Heavy Vehicles Percentage [%]	2.00	2.00	2.00	2.00	2.00	2.00
Growth Rate	1.01	1.00	1.00	1.01	1.01	1.01
In-Process Volume [veh/h]	0	0	0	0	0	0
Site-Generated Trips [veh/h]	30	0	0	15	0	49
Diverted Trips [veh/h]	0	0	0	0	0	0
Pass-by Trips [veh/h]	0	0	0	0	0	0
Existing Site Adjustment Volume [veh/h]	0	0	0	0	0	0
Other Volume [veh/h]	0	0	0	0	0	0
Total Hourly Volume [veh/h]	778	0	0	1036	397	245
Peak Hour Factor	1.0000	1.0000	1.0000	1.0000	1.0000	1.0000
Other Adjustment Factor	1.0000	1.0000	1.0000	1.0000	1.0000	1.0000
Total 15-Minute Volume [veh/h]	195	0	0	259	99	61
Total Analysis Volume [veh/h]	778	0	0	1036	397	245
Pedestrian Volume [ped/h]	0		0		0	
Bicycle Volume [bicycles/h]	0		0		0	

Intersection Settings

Cycle Length [s]	100
Lost time [s]	10.00

Phasing & Timing

Control Type	Permissive	Permissive	Permissive	Permissive	Split	Split
Signal group	2	0	0	6	7	0
Auxiliary Signal Groups						
Lead / Lag	-	-	-	-	Lead	-

Movement, Approach, & Intersection Results

V/C, Movement V/C Ratio	0.16	0.00	0.00	0.22	0.12	0.15
Intersection LOS	A					
Intersection V/C	0.469					

Intersection Level Of Service Report
Intersection 28: Vincent Avenue (NS) at I-10 EB Ramps (EW)

Control Type:	Signalized	Delay (sec / veh):	-
Analysis Method:	ICU 1	Level Of Service:	A
Analysis Period:	15 minutes	Volume to Capacity (v/c):	0.503

Intersection Setup

Name	Vincent Avenue			Vincent Avenue			I-10 EB Ramps			I-10 EB Ramps		
Approach	Northbound			Southbound			Eastbound			Westbound		
Lane Configuration												
Turning Movement	Left	Thru	Right	Left	Thru	Right	Left	Thru	Right	Left	Thru	Right
Lane Width [ft]	12.00	12.00	12.00	12.00	12.00	12.00	12.00	12.00	12.00	12.00	12.00	12.00
No. of Lanes in Pocket	0	0	0	0	0	0	0	0	0	0	0	0
Pocket Length [ft]	100.00	100.00	100.00	100.00	100.00	100.00	100.00	100.00	100.00	100.00	100.00	100.00
Speed [mph]	35.00			35.00			35.00			35.00		
Grade [%]	0.00			0.00			0.00			0.00		
Crosswalk	No			No			Yes			Yes		

Volumes

Name	Vincent Avenue			Vincent Avenue			I-10 EB Ramps			I-10 EB Ramps		
Base Volume Input [veh/h]	0	527	656	0	1045	358	217	0	243	0	0	0
Base Volume Adjustment Factor	1.0000	1.0000	1.0000	1.0000	1.0000	1.0000	1.0000	1.0000	1.0000	1.0000	1.0000	1.0000
Heavy Vehicles Percentage [%]	2.00	2.00	2.00	2.00	2.00	2.00	2.00	2.00	2.00	2.00	2.00	2.00
Growth Rate	1.00	1.01	1.01	1.00	1.01	1.01	1.01	1.00	1.01	1.00	1.00	1.00
In-Process Volume [veh/h]	0	0	0	0	0	0	0	0	0	0	0	0
Site-Generated Trips [veh/h]	0	3	0	1	1	9	27	0	0	0	0	0
Diverted Trips [veh/h]	0	0	0	0	0	0	0	0	0	0	0	0
Pass-by Trips [veh/h]	0	0	0	0	0	0	0	0	0	0	0	0
Existing Site Adjustment Volume [veh/h]	0	0	0	0	0	0	0	0	0	0	0	0
Other Volume [veh/h]	0	0	0	0	0	0	0	0	0	0	0	0
Total Hourly Volume [veh/h]	0	535	663	1	1056	371	246	0	245	0	0	0
Peak Hour Factor	1.0000	1.0000	1.0000	1.0000	1.0000	1.0000	1.0000	1.0000	1.0000	1.0000	1.0000	1.0000
Other Adjustment Factor	1.0000	1.0000	1.0000	1.0000	1.0000	1.0000	1.0000	1.0000	1.0000	1.0000	1.0000	1.0000
Total 15-Minute Volume [veh/h]	0	134	166	0	264	93	62	0	61	0	0	0
Total Analysis Volume [veh/h]	0	535	663	1	1056	371	246	0	245	0	0	0
Pedestrian Volume [ped/h]	0			0			0			0		
Bicycle Volume [bicycles/h]	0			0			0			0		

Intersection Settings

Cycle Length [s]	100
Lost time [s]	10.00

Phasing & Timing

Control Type	Permiss	Permiss	Permiss	Permiss	Permiss	Permiss	Split	Permiss	Split	Permiss	Permiss	Permiss
Signal group	0	2	0	0	6	0	3	0	0	0	0	0
Auxiliary Signal Groups												
Lead / Lag	-	-	-	-	-	-	Lead	-	-	-	-	-

Movement, Approach, & Intersection Results

V/C, Movement V/C Ratio	0.00	0.25	0.25	0.00	0.22	0.23	0.15	0.00	0.08	0.00	0.00	0.00
Intersection LOS	A											
Intersection V/C	0.503											

Intersection Level Of Service Report

Intersection 29: Vernon Ave/Lark Ellen Ave (NS) at Gladstone Street (EW)

Control Type:	Signalized	Delay (sec / veh):	-
Analysis Method:	ICU 1	Level Of Service:	C
Analysis Period:	15 minutes	Volume to Capacity (v/c):	0.723

Intersection Setup

Name	Lark Ellen Avenue			Vernon Avenue			Gladstone Street			Gladstone Street		
Approach	Northbound			Southbound			Eastbound			Westbound		
Lane Configuration												
Turning Movement	Left	Thru	Right	Left	Thru	Right	Left	Thru	Right	Left	Thru	Right
Lane Width [ft]	12.00	12.00	12.00	12.00	12.00	12.00	12.00	12.00	12.00	12.00	12.00	12.00
No. of Lanes in Pocket	1	0	0	1	0	0	1	0	0	1	0	0
Pocket Length [ft]	60.00	100.00	100.00	60.00	100.00	100.00	70.00	100.00	100.00	60.00	100.00	100.00
Speed [mph]	35.00			35.00			45.00			45.00		
Grade [%]	0.00			0.00			0.00			0.00		
Crosswalk	Yes			Yes			Yes			Yes		

Volumes

Name	Lark Ellen Avenue			Vernon Avenue			Gladstone Street			Gladstone Street		
Base Volume Input [veh/h]	76	423	178	23	426	88	51	198	32	150	825	39
Base Volume Adjustment Factor	1.0000	1.0000	1.0000	1.0000	1.0000	1.0000	1.0000	1.0000	1.0000	1.0000	1.0000	1.0000
Heavy Vehicles Percentage [%]	2.00	2.00	2.00	2.00	2.00	2.00	2.00	2.00	2.00	2.00	2.00	2.00
Growth Rate	1.01	1.01	1.01	1.01	1.01	1.01	1.01	1.01	1.01	1.01	1.01	1.01
In-Process Volume [veh/h]	0	0	0	0	0	0	0	0	0	0	0	0
Site-Generated Trips [veh/h]	0	0	0	0	0	30	4	18	0	0	111	0
Diverted Trips [veh/h]	0	0	0	0	0	0	0	0	0	0	0	0
Pass-by Trips [veh/h]	0	0	0	0	0	0	0	0	0	0	0	0
Existing Site Adjustment Volume [veh/h]	0	0	0	0	0	0	0	0	0	0	0	0
Other Volume [veh/h]	0	0	0	0	0	0	0	0	0	0	0	0
Total Hourly Volume [veh/h]	77	427	180	23	430	119	56	218	32	152	944	39
Peak Hour Factor	1.0000	1.0000	1.0000	1.0000	1.0000	1.0000	1.0000	1.0000	1.0000	1.0000	1.0000	1.0000
Other Adjustment Factor	1.0000	1.0000	1.0000	1.0000	1.0000	1.0000	1.0000	1.0000	1.0000	1.0000	1.0000	1.0000
Total 15-Minute Volume [veh/h]	19	107	45	6	108	30	14	55	8	38	236	10
Total Analysis Volume [veh/h]	77	427	180	23	430	119	56	218	32	152	944	39
Pedestrian Volume [ped/h]	0			0			0			0		
Bicycle Volume [bicycles/h]	0			0			0			0		

Intersection Settings

Cycle Length [s]	100
Lost time [s]	10.00

Phasing & Timing

Control Type	Permiss	Permiss	Permiss	Permiss	Permiss	Permiss	Permiss	Permiss	Permiss	Permiss	Permiss	Permiss
Signal group	0	2	0	0	6	0	0	8	0	0	4	0
Auxiliary Signal Groups												
Lead / Lag	-	-	-	-	-	-	-	-	-	-	-	-

Movement, Approach, & Intersection Results

V/C, Movement V/C Ratio	0.05	0.27	0.11	0.01	0.17	0.17	0.04	0.08	0.08	0.10	0.31	0.31
Intersection LOS	C											
Intersection V/C	0.723											

Intersection Level Of Service Report
Intersection 30: Azusa Avenue (NS) at I-210 EB Ramps (EW)

Control Type:	Signalized	Delay (sec / veh):	-
Analysis Method:	ICU 1	Level Of Service:	B
Analysis Period:	15 minutes	Volume to Capacity (v/c):	0.688

Intersection Setup

Name	Azusa Avenue		Azusa Avenue		I-210 EB Ramps	
Approach	Northbound		Southbound		Eastbound	
Lane Configuration						
Turning Movement	Left	Thru	Thru	Right	Left	Right
Lane Width [ft]	12.00	12.00	12.00	12.00	12.00	12.00
No. of Lanes in Pocket	0	0	0	0	0	0
Pocket Length [ft]	100.00	100.00	100.00	100.00	100.00	100.00
Speed [mph]	35.00		35.00		35.00	
Grade [%]	0.00		0.00		0.00	
Crosswalk	No		No		Yes	

Volumes

Name	Azusa Avenue		Azusa Avenue		I-210 EB Ramps	
Base Volume Input [veh/h]	0	1128	627	0	193	331
Base Volume Adjustment Factor	1.0000	1.0000	1.0000	1.0000	1.0000	1.0000
Heavy Vehicles Percentage [%]	2.00	2.00	2.00	2.00	2.00	2.00
Growth Rate	1.00	1.01	1.01	1.00	1.01	1.01
In-Process Volume [veh/h]	0	0	0	0	0	0
Site-Generated Trips [veh/h]	0	52	117	0	7	12
Diverted Trips [veh/h]	0	0	0	0	0	0
Pass-by Trips [veh/h]	0	0	0	0	0	0
Existing Site Adjustment Volume [veh/h]	0	0	0	0	0	0
Other Volume [veh/h]	0	0	0	0	0	0
Total Hourly Volume [veh/h]	0	1191	750	0	202	346
Peak Hour Factor	1.0000	1.0000	1.0000	1.0000	1.0000	1.0000
Other Adjustment Factor	1.0000	1.0000	1.0000	1.0000	1.0000	1.0000
Total 15-Minute Volume [veh/h]	0	298	188	0	51	87
Total Analysis Volume [veh/h]	0	1191	750	0	202	346
Pedestrian Volume [ped/h]	0		0		0	
Bicycle Volume [bicycles/h]	0		0		0	

Intersection Settings

Cycle Length [s]	100
Lost time [s]	10.00

Phasing & Timing

Control Type	Permissive	Permissive	Permissive	Permissive	Split	Split
Signal group	0	2	6	0	3	0
Auxiliary Signal Groups						
Lead / Lag	-	-	-	-	Lead	-

Movement, Approach, & Intersection Results

V/C, Movement V/C Ratio	0.00	0.37	0.23	0.00	0.06	0.22
Intersection LOS	B					
Intersection V/C	0.688					

Intersection Level Of Service Report

Intersection 31: Azusa Avenue (NS) at Paramount Street (EW)

Control Type:	Signalized	Delay (sec / veh):	-
Analysis Method:	ICU 1	Level Of Service:	B
Analysis Period:	15 minutes	Volume to Capacity (v/c):	0.648

Intersection Setup

Name	Azusa Avenue			Azusa Avenue			Paramount Street			Paramount Street		
Approach	Northbound			Southbound			Eastbound			Westbound		
Lane Configuration												
Turning Movement	Left	Thru	Right	Left	Thru	Right	Left	Thru	Right	Left	Thru	Right
Lane Width [ft]	12.00	12.00	12.00	12.00	12.00	12.00	12.00	12.00	12.00	12.00	12.00	12.00
No. of Lanes in Pocket	1	0	0	1	0	0	0	0	0	0	0	0
Pocket Length [ft]	200.00	100.00	100.00	110.00	100.00	100.00	100.00	100.00	100.00	100.00	100.00	100.00
Speed [mph]	35.00			35.00			25.00			15.00		
Grade [%]	0.00			0.00			0.00			0.00		
Crosswalk	No			Yes			Yes			Yes		

Volumes

Name	Azusa Avenue			Azusa Avenue			Paramount Street			Paramount Street		
Base Volume Input [veh/h]	127	936	0	11	819	75	162	0	79	2	0	8
Base Volume Adjustment Factor	1.0000	1.0000	1.0000	1.0000	1.0000	1.0000	1.0000	1.0000	1.0000	1.0000	1.0000	1.0000
Heavy Vehicles Percentage [%]	2.00	2.00	2.00	2.00	2.00	2.00	2.00	2.00	2.00	2.00	2.00	2.00
Growth Rate	1.01	1.01	1.01	1.01	1.01	1.01	1.01	1.01	1.01	1.01	1.01	1.01
In-Process Volume [veh/h]	0	0	0	0	0	0	0	0	0	0	0	0
Site-Generated Trips [veh/h]	6	31	0	0	112	0	27	0	0	0	0	0
Diverted Trips [veh/h]	0	0	0	0	0	0	0	0	0	0	0	0
Pass-by Trips [veh/h]	0	0	0	0	0	0	0	0	0	0	0	0
Existing Site Adjustment Volume [veh/h]	0	0	0	0	0	0	0	0	0	0	0	0
Other Volume [veh/h]	0	0	0	0	0	0	0	0	0	0	0	0
Total Hourly Volume [veh/h]	134	976	0	11	939	76	191	0	80	2	0	8
Peak Hour Factor	1.0000	1.0000	1.0000	1.0000	1.0000	1.0000	1.0000	1.0000	1.0000	1.0000	1.0000	1.0000
Other Adjustment Factor	1.0000	1.0000	1.0000	1.0000	1.0000	1.0000	1.0000	1.0000	1.0000	1.0000	1.0000	1.0000
Total 15-Minute Volume [veh/h]	34	244	0	3	235	19	48	0	20	1	0	2
Total Analysis Volume [veh/h]	134	976	0	11	939	76	191	0	80	2	0	8
Pedestrian Volume [ped/h]	0			0			0			0		
Bicycle Volume [bicycles/h]	0			0			0			0		

Intersection Settings

Cycle Length [s]	100
Lost time [s]	10.00

Phasing & Timing

Control Type	Permiss	Permiss	Permiss	Permiss	Permiss	Permiss	Permiss	Permiss	Permiss	Permiss	Permiss	Permiss
Signal group	0	2	0	0	6	0	0	8	0	0	4	0
Auxiliary Signal Groups												
Lead / Lag	-	-	-	-	-	-	-	-	-	-	-	-

Movement, Approach, & Intersection Results

V/C, Movement V/C Ratio	0.08	0.31	0.00	0.01	0.29	0.05	0.12	0.00	0.17	0.00	0.00	0.01
Intersection LOS	B											
Intersection V/C	0.648											

Intersection Level Of Service Report
Intersection 32: Azusa Avenue (NS) at Gladstone Street (EW)

Control Type:	Signalized	Delay (sec / veh):	-
Analysis Method:	ICU 1	Level Of Service:	C
Analysis Period:	15 minutes	Volume to Capacity (v/c):	0.785

Intersection Setup

Name	Azusa Avenue			Azusa Avenue			Gladstone Street			Gladstone Street		
Approach	Northbound			Southbound			Eastbound			Westbound		
Lane Configuration												
Turning Movement	Left	Thru	Right	Left	Thru	Right	Left	Thru	Right	Left	Thru	Right
Lane Width [ft]	12.00	12.00	12.00	12.00	12.00	12.00	12.00	12.00	12.00	12.00	12.00	12.00
No. of Lanes in Pocket	1	0	1	2	0	0	1	0	0	1	0	0
Pocket Length [ft]	190.00	100.00	190.00	190.00	100.00	100.00	150.00	100.00	100.00	150.00	100.00	100.00
Speed [mph]	35.00			35.00			40.00			40.00		
Grade [%]	0.00			0.00			0.00			0.00		
Crosswalk	Yes			Yes			Yes			Yes		

Volumes

Name	Azusa Avenue			Azusa Avenue			Gladstone Street			Gladstone Street		
Base Volume Input [veh/h]	113	668	64	119	631	82	117	243	41	139	738	93
Base Volume Adjustment Factor	1.0000	1.0000	1.0000	1.0000	1.0000	1.0000	1.0000	1.0000	1.0000	1.0000	1.0000	1.0000
Heavy Vehicles Percentage [%]	2.00	2.00	2.00	2.00	2.00	2.00	2.00	2.00	2.00	2.00	2.00	2.00
Growth Rate	1.01	1.01	1.01	1.01	1.01	1.01	1.01	1.01	1.01	1.01	1.01	1.01
In-Process Volume [veh/h]	0	0	0	0	0	0	0	0	0	0	0	0
Site-Generated Trips [veh/h]	3	11	1	12	15	85	14	4	0	1	23	12
Diverted Trips [veh/h]	0	0	0	0	0	0	0	0	0	0	0	0
Pass-by Trips [veh/h]	0	0	0	0	0	0	0	0	0	0	0	0
Existing Site Adjustment Volume [veh/h]	0	0	0	0	0	0	0	0	0	0	0	0
Other Volume [veh/h]	0	0	0	0	0	0	0	0	0	0	0	0
Total Hourly Volume [veh/h]	117	686	66	132	652	168	132	249	41	141	768	106
Peak Hour Factor	1.0000	1.0000	1.0000	1.0000	1.0000	1.0000	1.0000	1.0000	1.0000	1.0000	1.0000	1.0000
Other Adjustment Factor	1.0000	1.0000	1.0000	1.0000	1.0000	1.0000	1.0000	1.0000	1.0000	1.0000	1.0000	1.0000
Total 15-Minute Volume [veh/h]	29	172	17	33	163	42	33	62	10	35	192	27
Total Analysis Volume [veh/h]	117	686	66	132	652	168	132	249	41	141	768	106
Pedestrian Volume [ped/h]	0			0			0			0		
Bicycle Volume [bicycles/h]	0			0			0			0		

Intersection Settings

Cycle Length [s]	100
Lost time [s]	10.00

Phasing & Timing

Control Type	Protecte	Permiss	Overlap	Protecte	Permiss	Permiss	Protecte	Permiss	Permiss	Protecte	Permiss	Permiss
Signal group	5	2	2	1	6	0	3	8	0	7	4	0
Auxiliary Signal Groups			2,7									
Lead / Lag	Lead	-	-	Lead	-	-	Lead	-	-	Lead	-	-

Movement, Approach, & Intersection Results

V/C, Movement V/C Ratio	0.07	0.21	0.00	0.04	0.26	0.26	0.08	0.09	0.09	0.09	0.27	0.27
Intersection LOS	C											
Intersection V/C	0.785											

Intersection Level Of Service Report

Intersection 33: San Gabriel Ave/Azusa Ave (NS) at 1st St (EW)

Control Type:	Signalized	Delay (sec / veh):	-
Analysis Method:	ICU 1	Level Of Service:	C
Analysis Period:	15 minutes	Volume to Capacity (v/c):	0.727

Intersection Setup

Name												
Approach	Northbound			Southbound			Eastbound			Westbound		
Lane Configuration												
Turning Movement	Left	Thru	Right	Left	Thru	Right	Left	Thru	Right	Left	Thru	Right
Lane Width [ft]	12.00	12.00	12.00	12.00	12.00	12.00	12.00	12.00	12.00	12.00	12.00	12.00
No. of Lanes in Pocket	0	0	0	0	0	0	0	0	0	0	0	0
Pocket Length [ft]	100.00	100.00	100.00	100.00	100.00	100.00	100.00	100.00	100.00	100.00	100.00	100.00
Speed [mph]	35.00			35.00			35.00			35.00		
Grade [%]	0.00			0.00			0.00			0.00		
Crosswalk	No			Yes			Yes			Yes		

Volumes

Name												
Base Volume Input [veh/h]	86	516	410	72	826	31	38	82	76	369	252	161
Base Volume Adjustment Factor	1.0000	1.0000	1.0000	1.0000	1.0000	1.0000	1.0000	1.0000	1.0000	1.0000	1.0000	1.0000
Heavy Vehicles Percentage [%]	2.00	2.00	2.00	2.00	2.00	2.00	2.00	2.00	2.00	2.00	2.00	2.00
Growth Rate	1.06	1.06	1.06	1.06	1.06	1.06	1.06	1.06	1.06	1.06	1.06	1.06
In-Process Volume [veh/h]	0	0	0	0	0	0	0	0	0	0	0	0
Site-Generated Trips [veh/h]	0	23	14	13	51	0	0	0	0	93	0	14
Diverted Trips [veh/h]	0	0	0	0	0	0	0	0	0	0	0	0
Pass-by Trips [veh/h]	0	0	0	0	0	0	0	0	0	0	0	0
Existing Site Adjustment Volume [veh/h]	0	0	0	0	0	0	0	0	0	0	0	0
Other Volume [veh/h]	0	0	0	0	0	0	0	0	0	0	0	0
Total Hourly Volume [veh/h]	91	570	449	89	927	33	40	87	81	484	267	185
Peak Hour Factor	0.9080	0.9080	0.9080	0.9080	0.9080	0.9080	0.9080	0.9080	0.9080	0.9080	0.9080	0.9080
Other Adjustment Factor	1.0000	1.0000	1.0000	1.0000	1.0000	1.0000	1.0000	1.0000	1.0000	1.0000	1.0000	1.0000
Total 15-Minute Volume [veh/h]	25	157	124	25	255	9	11	24	22	133	74	51
Total Analysis Volume [veh/h]	100	628	494	98	1021	36	44	96	89	533	294	204
Pedestrian Volume [ped/h]	0			0			0			0		
Bicycle Volume [bicycles/h]	0			0			0			0		

Intersection Settings

Cycle Length [s]	100
Lost time [s]	10.00

Phasing & Timing

Control Type	Protecte	Permiss	Permiss	Protecte	Permiss	Permiss	Protecte	Permiss	Permiss	Protecte	Permiss	Permiss
Signal group	5	2	0	1	6	0	3	8	0	7	4	0
Auxiliary Signal Groups												
Lead / Lag	Lead	-	-	Lead	-	-	Lead	-	-	Lead	-	-

Movement, Approach, & Intersection Results

V/C, Movement V/C Ratio	0.06	0.20	0.31	0.06	0.32	0.02	0.03	0.06	0.06	0.17	0.16	0.16
Intersection LOS	C											
Intersection V/C	0.727											

Intersection Level Of Service Report
Intersection 34: Alameda Ave/I-210 WB Ramps NS) at 1st St (EW)

Control Type:	Signalized	Delay (sec / veh):	-
Analysis Method:	ICU 1	Level Of Service:	F
Analysis Period:	15 minutes	Volume to Capacity (v/c):	1.001

Intersection Setup

Name											
Approach	Northbound			Southbound			Eastbound			Westbound		
Lane Configuration												
Turning Movement	Left	Thru	Right	Left	Thru	Right	Left	Thru	Right	Left	Thru	Right
Lane Width [ft]	12.00	12.00	12.00	12.00	12.00	12.00	12.00	12.00	12.00	12.00	12.00	12.00
No. of Lanes in Pocket	1	0	0	1	0	1	1	0	1	1	0	1
Pocket Length [ft]	325.00	100.00	100.00	50.00	100.00	150.00	55.00	100.00	100.00	100.00	100.00	110.00
Speed [mph]	35.00			35.00			35.00			35.00		
Grade [%]	0.00			0.00			0.00			0.00		
Crosswalk	Yes			Yes			Yes			Yes		

Volumes

Name												
Base Volume Input [veh/h]	111	14	7	41	112	64	8	239	388	580	465	44
Base Volume Adjustment Factor	1.0000	1.0000	1.0000	1.0000	1.0000	1.0000	1.0000	1.0000	1.0000	1.0000	1.0000	1.0000
Heavy Vehicles Percentage [%]	2.00	2.00	2.00	2.00	2.00	2.00	2.00	2.00	2.00	2.00	2.00	2.00
Growth Rate	1.02	1.02	1.02	1.02	1.02	1.02	1.02	1.02	1.02	1.02	1.02	1.02
In-Process Volume [veh/h]	0	0	0	0	0	0	0	0	0	0	0	0
Site-Generated Trips [veh/h]	107	0	0	0	0	0	0	0	27	0	0	0
Diverted Trips [veh/h]	0	0	0	0	0	0	0	0	0	0	0	0
Pass-by Trips [veh/h]	0	0	0	0	0	0	0	0	0	0	0	0
Existing Site Adjustment Volume [veh/h]	0	0	0	0	0	0	0	0	0	0	0	0
Other Volume [veh/h]	0	0	0	0	0	0	0	0	0	0	0	0
Total Hourly Volume [veh/h]	220	14	7	42	114	65	8	244	423	592	474	45
Peak Hour Factor	0.9350	0.9350	0.9350	0.9350	0.9350	0.9350	0.9350	0.9350	0.9350	0.9350	0.9350	0.9350
Other Adjustment Factor	1.0000	1.0000	1.0000	1.0000	1.0000	1.0000	1.0000	1.0000	1.0000	1.0000	1.0000	1.0000
Total 15-Minute Volume [veh/h]	59	4	2	11	30	17	2	65	113	158	127	12
Total Analysis Volume [veh/h]	235	15	7	45	122	70	9	261	452	633	507	48
Pedestrian Volume [ped/h]	0			0			0			0		
Bicycle Volume [bicycles/h]	0			0			0			0		

Intersection Settings

Cycle Length [s]	100
Lost time [s]	10.00

Phasing & Timing

Control Type	Permiss	Permiss	Permiss	Permiss	Permiss	Permiss	Permiss	Permiss	Permiss	Permiss	Permiss	Permiss
Signal group	0	2	0	0	6	0	0	8	0	0	4	0
Auxiliary Signal Groups												
Lead / Lag	-	-	-	-	-	-	-	-	-	-	-	-

Movement, Approach, & Intersection Results

V/C, Movement V/C Ratio	0.15	0.01	0.01	0.03	0.08	0.04	0.01	0.08	0.28	0.40	0.32	0.03
Intersection LOS	F											
Intersection V/C	1.001											

Vincent Avenue Industrial Building

Vistro File: G:\...\PMC.vistro
Report File: G:\...\FBCP PM.pdf

Scenario 4 Future Baseline Plus Cumulative With Project
5/6/2020

Intersection Analysis Summary

ID	Intersection Name	Control Type	Method	Worst Mvmt	V/C	Delay (s/veh)	LOS
1	I-605 SB On Ramp (NS) at Live Oak Avenue (EW)	Signalized	ICU 1	WB Left	1.038	-	F
2	I-605 NB Ramps (NS) at Live Oak Avenue (EW)	Two-way stop	HCM 6th Edition	SB Right	1.838	411.4	F
3	Graham Road (NS) at Live Oak Avenue (EW)	Signalized	ICU 1	WB Thru	0.711	-	C
4	Rivergrade Road (NS) at Live Oak Avenue (EW)	Signalized	ICU 1	EB Thru	0.928	-	E
5	Stewart Avenue (NS) at Live Oak Avenue (EW)	Signalized	ICU 1	EB Thru	0.810	-	D
6	Baldwin Park Boulevard (NS) at Live Oak Avenue (EW)	Signalized	ICU 1	EB Thru	0.751	-	C
7	Arrow Highway (NS) at Live Oak Ave/Arrow Hwy (EW)	Signalized	ICU 1	EB Thru	0.951	-	E
8	Maine Avenue (NS) at Arrow Highway (EW)	Signalized	ICU 1	EB Thru	0.862	-	D
9	Santa Fe Dam/Azusa Canyon Road (NS) at Arrow Highway (EW)	Signalized	ICU 1	EB Thru	0.953	-	E
10	4th Street (NS) at Arrow Highway (EW)	Signalized	ICU 1	EB Thru	0.579	-	A
11	Irwindale Avenue (NS) at I-210 WB Ramps (EW)	Signalized	ICU 1	SB Thru	0.699	-	B
12	Irwindale Avenue (NS) at I-210 EB Ramps (EW)	Signalized	ICU 1	NB Thru	0.908	-	E
13	Irwindale Avenue (NS) at Jardin De Roca/Irwindale Rd (EW)	Signalized	ICU 1	NB Thru	0.828	-	D
14	Irwindale Avenue (NS) at 1st Street (EW)	Signalized	ICU 1	NB Thru	0.502	-	A
15	Irwindale Avenue (NS) at Gladstone Street (EW)	Signalized	ICU 1	SB Thru	0.681	-	B
16	Irwindale Avenue (NS) at Arrow Highway (EW)	Signalized	ICU 1	EB Thru	0.800	-	D
17	Vincent Avenue (NS) at	Signalized	ICU 1	NB Right	0.937		F

17	Gladstone Street (EW)	Signalized	ICU 1	NB Right	0.957	-	E
18	Vincent Avenue (NS) at Arrow Highway (EW)	Signalized	ICU 1	EB Thru	0.913	-	E
19	Vincent Avenue (NS) at Project North Driveway (EW)	Two-way stop	HCM 6th Edition	EB Left	0.374	18.4	C
20	Vincent Avenue (NS) at Project South Driveway (EW)	Two-way stop	HCM 6th Edition	EB Left	0.318	17.2	C
21	Vincent Avenue (NS) at Cypress Street (EW)	Signalized	ICU 1	EB Thru	0.742	-	C
22	Vincent Avenue (NS) at San Bernardino Road (EW)	Signalized	ICU 1	EB Right	0.695	-	B
23	Vincent Avenue (NS) at Badillo Street (EW)	Signalized	ICU 1	EB Thru	0.791	-	C
24	Vincent Avenue (NS) at Puente Avenue (EW)	Signalized	ICU 1	SB Thru	0.660	-	B
25	Vincent Avenue (NS) at Rowland Avenue (EW)	Signalized	ICU 1	SB Thru	0.624	-	B
26	Vincent Avenue (NS) at Workman Avenue (EW)	Signalized	ICU 1	NB Thru	0.696	-	B
27	Vincent Avenue (NS) at I-10 WB Ramps (EW)	Signalized	ICU 1	SB Thru	0.470	-	A
28	Vincent Avenue (NS) at I-10 EB Ramps (EW)	Signalized	ICU 1	NB Right	0.546	-	A
29	Vernon Ave/Lark Ellen Ave (NS) at Gladstone Street (EW)	Signalized	ICU 1	EB Right	0.762	-	C
30	Azusa Avenue (NS) at I-210 EB Ramps (EW)	Signalized	ICU 1	NB Thru	0.704	-	C
31	Azusa Avenue (NS) at Paramount Street (EW)	Signalized	ICU 1	NB Thru	0.670	-	B
32	Azusa Avenue (NS) at Gladstone Street (EW)	Signalized	ICU 1	EB Thru	0.755	-	C
33	San Gabriel Ave/Azusa Ave (NS) at 1st St (EW)	Signalized	ICU 1	SB Thru	0.694	-	B
34	Alameda Ave/I-210 WB Ramps (NS) at 1st St (EW)	Signalized	ICU 1	NB Left	0.740	-	C

V/C, Delay, LOS: For two-way stop, these values are taken from the movement with the worst (highest) delay value. For all other control types, they are taken for the whole intersection.

Intersection Level Of Service Report
Intersection 1: I-605 SB On Ramp (NS) at Live Oak Avenue (EW)

Control Type:	Signalized	Delay (sec / veh):	-
Analysis Method:	ICU 1	Level Of Service:	F
Analysis Period:	15 minutes	Volume to Capacity (v/c):	1.038

Intersection Setup

Name	I-605 SB On Ramps				Live Oak Avenue	
Approach	Northbound		Eastbound		Westbound	
Lane Configuration						
Turning Movement	Left	Right	Thru	Right	Left	Thru
Lane Width [ft]	12.00	12.00	12.00	12.00	12.00	12.00
No. of Lanes in Pocket	0	0	0	0	1	0
Pocket Length [ft]	100.00	100.00	100.00	100.00	365.00	100.00
Speed [mph]	35.00		35.00		45.00	
Grade [%]	0.00		0.00		0.00	
Crosswalk	Yes		No		No	

Volumes

Name	I-605 SB On Ramps				Live Oak Avenue	
Base Volume Input [veh/h]	0	0	1049	1114	557	884
Base Volume Adjustment Factor	1.0000	1.0000	1.0000	0.0000	1.0000	1.0000
Heavy Vehicles Percentage [%]	2.00	2.00	2.00	2.00	2.00	2.00
Growth Rate	1.00	1.00	1.01	1.01	1.01	1.01
In-Process Volume [veh/h]	0	0	0	0	0	0
Site-Generated Trips [veh/h]	0	0	133	504	342	282
Diverted Trips [veh/h]	0	0	0	0	0	0
Pass-by Trips [veh/h]	0	0	0	0	0	0
Existing Site Adjustment Volume [veh/h]	0	0	0	0	0	0
Other Volume [veh/h]	0	0	0	0	0	0
Total Hourly Volume [veh/h]	0	0	1192	504	905	1175
Peak Hour Factor	1.0000	1.0000	1.0000	1.0000	1.0000	1.0000
Other Adjustment Factor	1.0000	1.0000	1.0000	0.0000	1.0000	1.0000
Total 15-Minute Volume [veh/h]	0	0	298	0	226	294
Total Analysis Volume [veh/h]	0	0	1192	0	905	1175
Pedestrian Volume [ped/h]	0		0		0	
Bicycle Volume [bicycles/h]	0		0		0	

Intersection Settings

Cycle Length [s]	100
Lost time [s]	10.00

Phasing & Timing

Control Type	Permissive	Permissive	Permissive	Permissive	Protected	Permissive
Signal group	0	0	2	0	1	6
Auxiliary Signal Groups						
Lead / Lag	-	-	-	-	Lead	-

Movement, Approach, & Intersection Results

V/C, Movement V/C Ratio	0.00	0.00	0.37	0.00	0.57	0.37
Intersection LOS	F					
Intersection V/C	1.038					

Intersection Level Of Service Report
Intersection 2: I-605 NB Ramps (NS) at Live Oak Avenue (EW)

Control Type:	Two-way stop	Delay (sec / veh):	411.4
Analysis Method:	HCM 6th Edition	Level Of Service:	F
Analysis Period:	15 minutes	Volume to Capacity (v/c):	1.838

Intersection Setup

Name	I-605 NB Ramps			I-605 NB Ramps			Live Oak Avenue			Live Oak Avenue		
Approach	Northbound			Southbound			Eastbound			Westbound		
Lane Configuration												
Turning Movement	Left	Thru	Right	Left	Thru	Right	Left	Thru	Right	Left	Thru	Right
Lane Width [ft]	12.00	12.00	12.00	12.00	12.00	12.00	12.00	12.00	12.00	12.00	12.00	12.00
No. of Lanes in Pocket	0	0	0	0	0	0	0	0	0	0	0	0
Pocket Length [ft]	100.00	100.00	100.00	100.00	100.00	100.00	100.00	100.00	100.00	100.00	100.00	100.00
Speed [mph]	35.00			35.00			45.00			45.00		
Grade [%]	0.00			0.00			0.00			0.00		
Crosswalk	Yes			Yes			No			No		

Volumes

Name	I-605 NB Ramps			I-605 NB Ramps			Live Oak Avenue			Live Oak Avenue		
Base Volume Input [veh/h]	0	0	621	0	0	523	0	1012	0	0	944	0
Base Volume Adjustment Factor	1.0000	1.0000	1.0000	1.0000	1.0000	1.0000	1.0000	1.0000	1.0000	1.0000	1.0000	1.0000
Heavy Vehicles Percentage [%]	2.00	2.00	2.00	2.00	2.00	2.00	2.00	2.00	2.00	2.00	2.00	2.00
Growth Rate	1.00	1.00	1.01	1.00	1.00	1.01	1.00	1.01	1.00	1.00	1.01	1.00
In-Process Volume [veh/h]	0	0	0	0	0	0	0	0	0	0	0	0
Site-Generated Trips [veh/h]	0	0	222	0	0	170	0	133	0	0	454	0
Diverted Trips [veh/h]	0	0	0	0	0	0	0	0	0	0	0	0
Pass-by Trips [veh/h]	0	0	0	0	0	0	0	0	0	0	0	0
Existing Site Adjustment Volume [veh/h]	0	0	0	0	0	0	0	0	0	0	0	0
Other Volume [veh/h]	0	0	0	0	0	0	0	0	0	0	0	0
Total Hourly Volume [veh/h]	0	0	849	0	0	698	0	1155	0	0	1407	0
Peak Hour Factor	1.0000	1.0000	1.0000	1.0000	1.0000	1.0000	1.0000	1.0000	1.0000	1.0000	1.0000	1.0000
Other Adjustment Factor	1.0000	1.0000	1.0000	1.0000	1.0000	1.0000	1.0000	1.0000	1.0000	1.0000	1.0000	1.0000
Total 15-Minute Volume [veh/h]	0	0	212	0	0	175	0	289	0	0	352	0
Total Analysis Volume [veh/h]	0	0	849	0	0	698	0	1155	0	0	1407	0
Pedestrian Volume [ped/h]	0			0			0			0		

Intersection Settings

Priority Scheme	Stop	Stop	Free	Free
Flared Lane				
Storage Area [veh]	0	0	0	0
Two-Stage Gap Acceptance	No	No		
Number of Storage Spaces in Median	0	0	0	0

Movement, Approach, & Intersection Results

V/C, Movement V/C Ratio	0.00	0.00	1.85	0.00	0.00	1.84	0.00	0.01	0.00	0.00	0.01	0.00
d_M, Delay for Movement [s/veh]	0.00	0.00	410.83	0.00	0.00	411.41	0.00	0.00	0.00	0.00	0.00	0.00
Movement LOS			F			F		A			A	
95th-Percentile Queue Length [veh/ln]	0.00	0.00	54.54	0.00	0.00	45.53	0.00	0.00	0.00	0.00	0.00	0.00
95th-Percentile Queue Length [ft/ln]	0.00	0.00	1363.43	0.00	0.00	1138.32	0.00	0.00	0.00	0.00	0.00	0.00
d_A, Approach Delay [s/veh]	410.83			411.41			0.00			0.00		
Approach LOS	F			F			A			A		
d_I, Intersection Delay [s/veh]	154.77											
Intersection LOS	F											

Intersection Level Of Service Report
Intersection 3: Graham Road (NS) at Live Oak Avenue (EW)

Control Type:	Signalized	Delay (sec / veh):	-
Analysis Method:	ICU 1	Level Of Service:	C
Analysis Period:	15 minutes	Volume to Capacity (v/c):	0.711

Intersection Setup

Name	Graham Road		Live Oak Avenue		Live Oak Avenue	
Approach	Northbound		Eastbound		Westbound	
Lane Configuration						
Turning Movement	Left	Right	Thru	Right	Left	Thru
Lane Width [ft]	12.00	12.00	12.00	12.00	12.00	12.00
No. of Lanes in Pocket	0	0	0	0	1	0
Pocket Length [ft]	100.00	100.00	100.00	100.00	205.00	100.00
Speed [mph]	35.00		45.00		45.00	
Grade [%]	0.00		0.00		0.00	
Crosswalk	Yes		No		Yes	

Volumes

Name	Graham Road		Live Oak Avenue		Live Oak Avenue	
Base Volume Input [veh/h]	38	39	578	28	14	1334
Base Volume Adjustment Factor	1.0000	1.0000	1.0000	1.0000	1.0000	1.0000
Heavy Vehicles Percentage [%]	2.00	2.00	2.00	2.00	2.00	2.00
Growth Rate	1.01	1.01	1.01	1.01	1.01	1.01
In-Process Volume [veh/h]	0	0	0	0	0	0
Site-Generated Trips [veh/h]	0	0	355	0	0	454
Diverted Trips [veh/h]	0	0	0	0	0	0
Pass-by Trips [veh/h]	0	0	0	0	0	0
Existing Site Adjustment Volume [veh/h]	0	0	0	0	0	0
Other Volume [veh/h]	0	0	0	0	0	0
Total Hourly Volume [veh/h]	38	39	939	28	14	1801
Peak Hour Factor	1.0000	1.0000	1.0000	1.0000	1.0000	1.0000
Other Adjustment Factor	1.0000	1.0000	1.0000	1.0000	1.0000	1.0000
Total 15-Minute Volume [veh/h]	10	10	235	7	4	450
Total Analysis Volume [veh/h]	38	39	939	28	14	1801
Pedestrian Volume [ped/h]	0		0		0	
Bicycle Volume [bicycles/h]	0		0		0	

Intersection Settings

Cycle Length [s]	100
Lost time [s]	10.00

Phasing & Timing

Control Type	Permissive	Permissive	Permissive	Permissive	Protected	Permissive
Signal group	5	0	8	0	7	4
Auxiliary Signal Groups						
Lead / Lag	Lead	-	-	-	Lead	-

Movement, Approach, & Intersection Results

V/C, Movement V/C Ratio	0.02	0.05	0.29	0.02	0.01	0.56
Intersection LOS	C					
Intersection V/C	0.711					

Intersection Level Of Service Report

Intersection 4: Rivergrade Road (NS) at Live Oak Avenue (EW)

Control Type:	Signalized	Delay (sec / veh):	-
Analysis Method:	ICU 1	Level Of Service:	E
Analysis Period:	15 minutes	Volume to Capacity (v/c):	0.928

Intersection Setup

Name	Rivergrade Raod			Rivergrade Road			Live Oak Avenue			Live Oak Avenue		
Approach	Northbound			Southbound			Eastbound			Westbound		
Lane Configuration												
Turning Movement	Left	Thru	Right	Left	Thru	Right	Left	Thru	Right	Left	Thru	Right
Lane Width [ft]	12.00	12.00	12.00	12.00	12.00	12.00	12.00	12.00	12.00	12.00	12.00	12.00
No. of Lanes in Pocket	1	0	0	1	0	1	1	0	0	1	0	1
Pocket Length [ft]	315.00	100.00	100.00	160.00	100.00	145.00	205.00	100.00	100.00	155.00	100.00	120.00
Speed [mph]	50.00			40.00			45.00			45.00		
Grade [%]	0.00			0.00			0.00			0.00		
Crosswalk	Yes			Yes			Yes			Yes		

Volumes

Name	Rivergrade Raod			Rivergrade Road			Live Oak Avenue			Live Oak Avenue		
Base Volume Input [veh/h]	162	193	481	25	41	54	37	1475	21	117	685	12
Base Volume Adjustment Factor	1.0000	1.0000	1.0000	1.0000	1.0000	1.0000	1.0000	1.0000	1.0000	1.0000	1.0000	1.0000
Heavy Vehicles Percentage [%]	2.00	2.00	2.00	2.00	2.00	2.00	2.00	2.00	2.00	2.00	2.00	2.00
Growth Rate	1.01	1.01	1.01	1.01	1.01	1.01	1.01	1.01	1.01	1.01	1.01	1.01
In-Process Volume [veh/h]	0	0	0	0	0	0	0	0	0	0	0	0
Site-Generated Trips [veh/h]	0	2	3	0	2	99	113	132	0	3	225	0
Diverted Trips [veh/h]	0	0	0	0	0	0	0	0	0	0	0	0
Pass-by Trips [veh/h]	0	0	0	0	0	0	0	0	0	0	0	0
Existing Site Adjustment Volume [veh/h]	0	0	0	0	0	0	0	0	0	0	0	0
Other Volume [veh/h]	0	0	0	0	0	0	0	0	0	0	0	0
Total Hourly Volume [veh/h]	164	197	489	25	43	154	150	1622	21	121	917	12
Peak Hour Factor	1.0000	1.0000	1.0000	1.0000	1.0000	1.0000	1.0000	1.0000	1.0000	1.0000	1.0000	1.0000
Other Adjustment Factor	1.0000	1.0000	1.0000	1.0000	1.0000	1.0000	1.0000	1.0000	1.0000	1.0000	1.0000	1.0000
Total 15-Minute Volume [veh/h]	41	49	122	6	11	39	38	406	5	30	229	3
Total Analysis Volume [veh/h]	164	197	489	25	43	154	150	1622	21	121	917	12
Pedestrian Volume [ped/h]	0			0			0			0		
Bicycle Volume [bicycles/h]	0			0			0			0		

Intersection Settings

Cycle Length [s]	100
Lost time [s]	10.00

Phasing & Timing

Control Type	Protecte	Permiss	Overlap	Protecte	Permiss	Permiss	Protecte	Permiss	Permiss	Protecte	Permiss	Permiss
Signal group	5	2	2	1	6	0	3	8	0	7	4	0
Auxiliary Signal Groups			2,7									
Lead / Lag	Lead	-	-	Lead	-	-	Lead	-	-	Lead	-	-

Movement, Approach, & Intersection Results

V/C, Movement V/C Ratio	0.10	0.12	0.23	0.02	0.01	0.10	0.09	0.51	0.01	0.08	0.29	0.01
Intersection LOS	E											
Intersection V/C	0.928											

Intersection Level Of Service Report
Intersection 5: Stewart Avenue (NS) at Live Oak Avenue (EW)

Control Type:	Signalized	Delay (sec / veh):	-
Analysis Method:	ICU 1	Level Of Service:	D
Analysis Period:	15 minutes	Volume to Capacity (v/c):	0.810

Intersection Setup

Name	Stewart Avenue			Stewart Avenue			Live Oak Avenue			Live Oak Avenue		
Approach	Northbound			Southbound			Eastbound			Westbound		
Lane Configuration												
Turning Movement	Left	Thru	Right	Left	Thru	Right	Left	Thru	Right	Left	Thru	Right
Lane Width [ft]	12.00	12.00	12.00	12.00	12.00	12.00	12.00	12.00	12.00	12.00	12.00	12.00
No. of Lanes in Pocket	0	0	0	1	0	0	1	0	0	1	0	0
Pocket Length [ft]	100.00	100.00	100.00	100.00	100.00	100.00	165.00	100.00	100.00	100.00	100.00	100.00
Speed [mph]	30.00			30.00			45.00			45.00		
Grade [%]	0.00			0.00			0.00			0.00		
Crosswalk	Yes			Yes			No			Yes		

Volumes

Name	Stewart Avenue			Stewart Avenue			Live Oak Avenue			Live Oak Avenue		
Base Volume Input [veh/h]	53	27	7	32	109	7	38	1720	302	31	692	9
Base Volume Adjustment Factor	1.0000	1.0000	1.0000	1.0000	1.0000	1.0000	1.0000	1.0000	1.0000	1.0000	1.0000	1.0000
Heavy Vehicles Percentage [%]	2.00	2.00	2.00	2.00	2.00	2.00	2.00	2.00	2.00	2.00	2.00	2.00
Growth Rate	1.01	1.01	1.01	1.01	1.01	1.01	1.01	1.01	1.01	1.01	1.01	1.01
In-Process Volume [veh/h]	0	0	0	0	0	0	0	0	0	0	0	0
Site-Generated Trips [veh/h]	0	2	3	0	2	0	0	135	0	3	228	7
Diverted Trips [veh/h]	0	0	0	0	0	0	0	0	0	0	0	0
Pass-by Trips [veh/h]	0	0	0	0	0	0	0	0	0	0	0	0
Existing Site Adjustment Volume [veh/h]	0	0	0	0	0	0	0	0	0	0	0	0
Other Volume [veh/h]	0	0	0	0	0	0	0	0	0	0	0	0
Total Hourly Volume [veh/h]	54	29	10	32	112	7	38	1872	305	34	927	16
Peak Hour Factor	1.0000	1.0000	1.0000	1.0000	1.0000	1.0000	1.0000	1.0000	1.0000	1.0000	1.0000	1.0000
Other Adjustment Factor	1.0000	1.0000	1.0000	1.0000	1.0000	1.0000	1.0000	1.0000	1.0000	1.0000	1.0000	1.0000
Total 15-Minute Volume [veh/h]	14	7	3	8	28	2	10	468	76	9	232	4
Total Analysis Volume [veh/h]	54	29	10	32	112	7	38	1872	305	34	927	16
Pedestrian Volume [ped/h]	0			0			0			0		
Bicycle Volume [bicycles/h]	0			0			0			0		

Intersection Settings

Cycle Length [s]	100
Lost time [s]	10.00

Phasing & Timing

Control Type	Permiss	Permiss	Permiss	Permiss	Permiss	Permiss	Permiss	Permiss	Permiss	Permiss	Permiss	Permiss
Signal group	0	2	0	0	6	0	0	8	0	0	4	0
Auxiliary Signal Groups												
Lead / Lag	-	-	-	-	-	-	-	-	-	-	-	-

Movement, Approach, & Intersection Results

V/C, Movement V/C Ratio	0.03	0.06	0.06	0.02	0.07	0.00	0.02	0.59	0.19	0.02	0.29	0.01
Intersection LOS	D											
Intersection V/C	0.810											

Intersection Level Of Service Report

Intersection 6: Baldwin Park Boulevard (NS) at Live Oak Avenue (EW)

Control Type:	Signalized	Delay (sec / veh):	-
Analysis Method:	ICU 1	Level Of Service:	C
Analysis Period:	15 minutes	Volume to Capacity (v/c):	0.751

Intersection Setup

Name	Baldwin Park Boulevard						Live Oak Avenue			Live Oak Avenue		
Approach	Northbound			Southbound			Eastbound			Westbound		
Lane Configuration												
Turning Movement	Left	Thru	Right	Left	Thru	Right	Left	Thru	Right	Left	Thru	Right
Lane Width [ft]	12.00	12.00	12.00	12.00	12.00	12.00	12.00	12.00	12.00	12.00	12.00	12.00
No. of Lanes in Pocket	1	0	0	0	0	0	0	0	0	1	0	0
Pocket Length [ft]	100.00	100.00	100.00	100.00	100.00	100.00	100.00	100.00	100.00	200.00	100.00	100.00
Speed [mph]	40.00			35.00			45.00			45.00		
Grade [%]	0.00			0.00			0.00			0.00		
Crosswalk	Yes			Yes			No			No		

Volumes

Name	Baldwin Park Boulevard						Live Oak Avenue			Live Oak Avenue		
Base Volume Input [veh/h]	77	0	94	0	0	0	0	1259	623	280	623	0
Base Volume Adjustment Factor	1.0000	1.0000	1.0000	1.0000	1.0000	1.0000	1.0000	1.0000	1.0000	1.0000	1.0000	1.0000
Heavy Vehicles Percentage [%]	2.00	2.00	2.00	2.00	2.00	2.00	2.00	2.00	2.00	2.00	2.00	2.00
Growth Rate	1.01	1.01	1.01	1.01	1.01	1.01	1.01	1.01	1.01	1.01	1.01	1.01
In-Process Volume [veh/h]	0	0	0	0	0	0	0	0	0	0	0	0
Site-Generated Trips [veh/h]	8	5	8	23	6	36	23	99	15	26	194	24
Diverted Trips [veh/h]	0	0	0	0	0	0	0	0	0	0	0	0
Pass-by Trips [veh/h]	0	0	0	0	0	0	0	0	0	0	0	0
Existing Site Adjustment Volume [veh/h]	0	0	0	0	0	0	0	0	0	0	0	0
Other Volume [veh/h]	0	0	0	0	0	0	0	0	0	0	0	0
Total Hourly Volume [veh/h]	86	5	103	23	6	36	23	1371	644	309	823	24
Peak Hour Factor	1.0000	1.0000	1.0000	1.0000	1.0000	1.0000	1.0000	1.0000	1.0000	1.0000	1.0000	1.0000
Other Adjustment Factor	1.0000	1.0000	1.0000	1.0000	1.0000	1.0000	1.0000	1.0000	1.0000	1.0000	1.0000	1.0000
Total 15-Minute Volume [veh/h]	22	1	26	6	2	9	6	343	161	77	206	6
Total Analysis Volume [veh/h]	86	5	103	23	6	36	23	1371	644	309	823	24
Pedestrian Volume [ped/h]	0			0			0			0		
Bicycle Volume [bicycles/h]	0			0			0			0		

Intersection Settings

Cycle Length [s]	100
Lost time [s]	10.00

Phasing & Timing

Control Type	Permiss	Permiss	Permiss	Permiss	Permiss	Permiss	Permiss	Permiss	Permiss	Protecte	Permiss	Permiss
Signal group	5	0	0	0	0	0	0	8	0	7	4	0
Auxiliary Signal Groups												
Lead / Lag	Lead	-	-	-	-	-	-	-	-	Lead	-	-

Movement, Approach, & Intersection Results

V/C, Movement V/C Ratio	0.03	0.00	0.00	0.00	0.00	0.00	0.01	0.43	0.40	0.19	0.26	0.02
Intersection LOS	C											
Intersection V/C	0.751											

Intersection Level Of Service Report
Intersection 7: Arrow Highway (NS) at Live Oak Ave/Arrow Hwy (EW)

Control Type:	Signalized	Delay (sec / veh):	-
Analysis Method:	ICU 1	Level Of Service:	E
Analysis Period:	15 minutes	Volume to Capacity (v/c):	0.951

Intersection Setup

Name			Live Oak Avenue		Arrow Highway	
Approach	Southbound		Eastbound		Westbound	
Lane Configuration						
Turning Movement	Left	Right	Left	Thru	Thru	Right
Lane Width [ft]	12.00	12.00	12.00	12.00	12.00	12.00
No. of Lanes in Pocket	0	0	1	0	0	0
Pocket Length [ft]	100.00	100.00	160.00	100.00	100.00	100.00
Speed [mph]	35.00		45.00		45.00	
Grade [%]	0.00		0.00		0.00	
Crosswalk	No		Yes		No	

Volumes

Name			Live Oak Avenue		Arrow Highway	
Base Volume Input [veh/h]	1077	131	41	1326	1117	451
Base Volume Adjustment Factor	1.0000	1.0000	1.0000	1.0000	1.0000	1.0000
Heavy Vehicles Percentage [%]	2.00	2.00	2.00	2.00	2.00	2.00
Growth Rate	1.01	1.01	1.01	1.01	1.01	1.00
In-Process Volume [veh/h]	0	0	0	0	0	0
Site-Generated Trips [veh/h]	43	29	21	109	215	57
Diverted Trips [veh/h]	0	0	0	0	0	0
Pass-by Trips [veh/h]	0	0	0	0	0	0
Existing Site Adjustment Volume [veh/h]	0	0	0	0	0	0
Other Volume [veh/h]	0	0	0	0	0	0
Total Hourly Volume [veh/h]	1131	161	62	1448	1343	508
Peak Hour Factor	1.0000	1.0000	1.0000	1.0000	1.0000	1.0000
Other Adjustment Factor	1.0000	1.0000	1.0000	1.0000	1.0000	1.0000
Total 15-Minute Volume [veh/h]	283	40	16	362	336	127
Total Analysis Volume [veh/h]	1131	161	62	1448	1343	508
Pedestrian Volume [ped/h]	0		0		0	
Bicycle Volume [bicycles/h]	0		0		0	

Intersection Settings

Cycle Length [s]	100
Lost time [s]	10.00

Phasing & Timing

Control Type	Permissive	Permissive	Permissive	Permissive	Permissive	Unsignalized
Signal group	1	0	0	8	4	0
Auxiliary Signal Groups						
Lead / Lag	Lead	-	-	-	-	-

Movement, Approach, & Intersection Results

V/C, Movement V/C Ratio	0.35	0.10	0.04	0.45	0.42	0.00
Intersection LOS	E					
Intersection V/C	0.951					

Intersection Level Of Service Report
Intersection 8: Maine Avenue (NS) at Arrow Highway (EW)

Control Type:	Signalized	Delay (sec / veh):	-
Analysis Method:	ICU 1	Level Of Service:	D
Analysis Period:	15 minutes	Volume to Capacity (v/c):	0.862

Intersection Setup

Name	Maine Avenue		Arrow Highway		Arrow Highway	
Approach	Northbound		Eastbound		Westbound	
Lane Configuration						
Turning Movement	Left	Right	Thru	Right	Left	Thru
Lane Width [ft]	12.00	12.00	12.00	12.00	12.00	12.00
No. of Lanes in Pocket	0	1	0	0	1	0
Pocket Length [ft]	100.00	50.00	100.00	100.00	80.00	100.00
Speed [mph]	35.00		45.00		45.00	
Grade [%]	0.00		0.00		0.00	
Crosswalk	Yes		No		Yes	

Volumes

Name	Maine Avenue		Arrow Highway		Arrow Highway	
Base Volume Input [veh/h]	247	57	1849	555	70	1046
Base Volume Adjustment Factor	1.0000	1.0000	1.0000	1.0000	1.0000	1.0000
Heavy Vehicles Percentage [%]	2.00	2.00	2.00	2.00	2.00	2.00
Growth Rate	1.01	1.01	1.01	1.01	1.01	1.01
In-Process Volume [veh/h]	0	0	0	0	0	0
Site-Generated Trips [veh/h]	5	0	147	5	0	267
Diverted Trips [veh/h]	0	0	0	0	0	0
Pass-by Trips [veh/h]	0	0	0	0	0	0
Existing Site Adjustment Volume [veh/h]	0	0	0	0	0	0
Other Volume [veh/h]	0	0	0	0	0	0
Total Hourly Volume [veh/h]	254	58	2014	566	71	1323
Peak Hour Factor	1.0000	1.0000	1.0000	1.0000	1.0000	1.0000
Other Adjustment Factor	1.0000	1.0000	1.0000	1.0000	1.0000	1.0000
Total 15-Minute Volume [veh/h]	64	15	504	142	18	331
Total Analysis Volume [veh/h]	254	58	2014	566	71	1323
Pedestrian Volume [ped/h]	0		0		0	
Bicycle Volume [bicycles/h]	0		0		0	

Intersection Settings

Cycle Length [s]	100
Lost time [s]	10.00

Phasing & Timing

Control Type	Split	Split	Permissive	Permissive	Permissive	Permissive
Signal group	5	0	8	0	0	4
Auxiliary Signal Groups						
Lead / Lag	Lead	-	-	-	-	-

Movement, Approach, & Intersection Results

V/C, Movement V/C Ratio	0.08	0.04	0.63	0.35	0.04	0.28
Intersection LOS	D					
Intersection V/C	0.862					

Intersection Level Of Service Report

Intersection 9: Santa Fe Dam/Azusa Canyon Road (NS) at Arrow Highway (EW)

Control Type:	Signalized	Delay (sec / veh):	-
Analysis Method:	ICU 1	Level Of Service:	E
Analysis Period:	15 minutes	Volume to Capacity (v/c):	0.953

Intersection Setup

Name	Azusa Canyon Road						Arrow Highway			Arrow Highway		
Approach	Northbound			Southbound			Eastbound			Westbound		
Lane Configuration												
Turning Movement	Left	Thru	Right	Left	Thru	Right	Left	Thru	Right	Left	Thru	Right
Lane Width [ft]	12.00	12.00	12.00	12.00	12.00	12.00	12.00	12.00	12.00	12.00	12.00	12.00
No. of Lanes in Pocket	1	0	0	0	0	0	1	0	0	1	0	0
Pocket Length [ft]	200.00	100.00	100.00	100.00	100.00	100.00	185.00	100.00	100.00	180.00	100.00	100.00
Speed [mph]	35.00			35.00			45.00			45.00		
Grade [%]	0.00			0.00			0.00			0.00		
Crosswalk	Yes			Yes			No			Yes		

Volumes

Name	Azusa Canyon Road						Arrow Highway			Arrow Highway		
Base Volume Input [veh/h]	120	5	442	15	13	29	14	1265	59	158	967	16
Base Volume Adjustment Factor	1.0000	1.0000	1.0000	1.0000	1.0000	1.0000	1.0000	1.0000	1.0000	1.0000	1.0000	1.0000
Heavy Vehicles Percentage [%]	2.00	2.00	2.00	2.00	2.00	2.00	2.00	2.00	2.00	2.00	2.00	2.00
Growth Rate	1.01	1.00	1.01	1.00	1.00	1.00	1.00	1.01	1.01	1.01	1.01	1.00
In-Process Volume [veh/h]	0	0	0	0	0	0	0	0	0	0	0	0
Site-Generated Trips [veh/h]	28	0	5	0	0	0	0	111	30	18	236	0
Diverted Trips [veh/h]	0	0	0	0	0	0	0	0	0	0	0	0
Pass-by Trips [veh/h]	0	0	0	0	0	0	0	0	0	0	0	0
Existing Site Adjustment Volume [veh/h]	0	0	0	0	0	0	0	0	0	0	0	0
Other Volume [veh/h]	0	0	0	0	0	0	0	0	0	0	0	0
Total Hourly Volume [veh/h]	149	5	451	15	13	29	14	1389	90	178	1213	16
Peak Hour Factor	1.0000	1.0000	1.0000	1.0000	1.0000	1.0000	1.0000	1.0000	1.0000	1.0000	1.0000	1.0000
Other Adjustment Factor	1.0000	1.0000	1.0000	1.0000	1.0000	1.0000	1.0000	1.0000	1.0000	1.0000	1.0000	1.0000
Total 15-Minute Volume [veh/h]	37	1	113	4	3	7	4	347	23	45	303	4
Total Analysis Volume [veh/h]	149	5	451	15	13	29	14	1389	90	178	1213	16
Pedestrian Volume [ped/h]	0			0			0			0		
Bicycle Volume [bicycles/h]	0			0			0			0		

Intersection Settings

Cycle Length [s]	100
Lost time [s]	10.00

Phasing & Timing

Control Type	Split	Split	Split	Split	Split	Split	Protecte	Permiss	Permiss	Protecte	Permiss	Permiss
Signal group	0	2	0	0	6	0	3	8	0	7	4	0
Auxiliary Signal Groups												
Lead / Lag	-	-	-	-	-	-	Lead	-	-	Lead	-	-

Movement, Approach, & Intersection Results

V/C, Movement V/C Ratio	0.09	0.00	0.28	0.01	0.03	0.03	0.01	0.43	0.06	0.11	0.38	0.01
Intersection LOS	E											
Intersection V/C	0.953											

Intersection Level Of Service Report
Intersection 10: 4th Street (NS) at Arrow Highway (EW)

Control Type:	Signalized	Delay (sec / veh):	-
Analysis Method:	ICU 1	Level Of Service:	A
Analysis Period:	15 minutes	Volume to Capacity (v/c):	0.579

Intersection Setup

Name	4th Street			4th Street			Arrow Highway			Arrow Highway		
Approach	Northbound			Southbound			Eastbound			Westbound		
Lane Configuration												
Turning Movement	Left	Thru	Right	Left	Thru	Right	Left	Thru	Right	Left	Thru	Right
Lane Width [ft]	12.00	12.00	12.00	12.00	12.00	12.00	12.00	12.00	12.00	12.00	12.00	12.00
No. of Lanes in Pocket	1	0	0	0	0	0	1	0	1	1	0	0
Pocket Length [ft]	55.00	100.00	100.00	100.00	100.00	100.00	145.00	100.00	150.00	195.00	100.00	100.00
Speed [mph]	35.00			25.00			45.00			45.00		
Grade [%]	0.00			0.00			0.00			0.00		
Crosswalk	Yes			Yes			Yes			Yes		

Volumes

Name	4th Street			4th Street			Arrow Highway			Arrow Highway		
Base Volume Input [veh/h]	143	1	44	11	0	12	5	1758	39	41	923	2
Base Volume Adjustment Factor	1.0000	1.0000	1.0000	1.0000	1.0000	1.0000	1.0000	1.0000	1.0000	1.0000	1.0000	1.0000
Heavy Vehicles Percentage [%]	2.00	2.00	2.00	2.00	2.00	2.00	2.00	2.00	2.00	2.00	2.00	2.00
Growth Rate	1.01	1.01	1.01	1.01	1.01	1.01	1.01	1.01	1.01	1.01	1.01	1.01
In-Process Volume [veh/h]	0	0	0	0	0	0	0	0	0	0	0	0
Site-Generated Trips [veh/h]	0	0	0	0	0	0	0	116	0	0	254	0
Diverted Trips [veh/h]	0	0	0	0	0	0	0	0	0	0	0	0
Pass-by Trips [veh/h]	0	0	0	0	0	0	0	0	0	0	0	0
Existing Site Adjustment Volume [veh/h]	0	0	0	0	0	0	0	0	0	0	0	0
Other Volume [veh/h]	0	0	0	0	0	0	0	0	0	0	0	0
Total Hourly Volume [veh/h]	144	1	44	11	0	12	5	1892	39	41	1186	2
Peak Hour Factor	1.0000	1.0000	1.0000	1.0000	1.0000	1.0000	1.0000	1.0000	1.0000	1.0000	1.0000	1.0000
Other Adjustment Factor	1.0000	1.0000	1.0000	1.0000	1.0000	1.0000	1.0000	1.0000	1.0000	1.0000	1.0000	1.0000
Total 15-Minute Volume [veh/h]	36	0	11	3	0	3	1	473	10	10	297	1
Total Analysis Volume [veh/h]	144	1	44	11	0	12	5	1892	39	41	1186	2
Pedestrian Volume [ped/h]	0			0			0			0		
Bicycle Volume [bicycles/h]	0			0			0			0		

Intersection Settings

Cycle Length [s]	100
Lost time [s]	10.00

Phasing & Timing

Control Type	Split	Split	Split	Split	Split	Split	Protecte	Permiss	Permiss	Protecte	Permiss	Permiss
Signal group	0	2	0	0	6	0	3	8	0	7	4	0
Auxiliary Signal Groups												
Lead / Lag	-	-	-	-	-	-	Lead	-	-	Lead	-	-

Movement, Approach, & Intersection Results

V/C, Movement V/C Ratio	0.05	0.05	0.03	0.01	0.00	0.01	0.00	0.39	0.02	0.03	0.37	0.00
Intersection LOS	A											
Intersection V/C	0.579											

Intersection Level Of Service Report
Intersection 11: Irwindale Avenue (NS) at I-210 WB Ramps (EW)

Control Type:	Signalized	Delay (sec / veh):	-
Analysis Method:	ICU 1	Level Of Service:	B
Analysis Period:	15 minutes	Volume to Capacity (v/c):	0.699

Intersection Setup

Name	Irwindale Avenue				I-210 WB Ramps	
Approach	Northbound		Southbound		Westbound	
Lane Configuration						
Turning Movement	Thru	Right	Left	Thru	Left	Right
Lane Width [ft]	12.00	12.00	12.00	12.00	12.00	12.00
No. of Lanes in Pocket	0	0	0	0	0	0
Pocket Length [ft]	100.00	100.00	100.00	100.00	100.00	100.00
Speed [mph]	35.00		35.00		35.00	
Grade [%]	0.00		0.00		0.00	
Crosswalk	No		No		Yes	

Volumes

Name	Irwindale Avenue				I-210 WB Ramps	
Base Volume Input [veh/h]	793	0	0	1473	192	206
Base Volume Adjustment Factor	1.0000	1.0000	1.0000	1.0000	1.0000	1.0000
Heavy Vehicles Percentage [%]	2.00	2.00	2.00	2.00	2.00	2.00
Growth Rate	1.01	1.00	1.00	1.01	1.01	1.01
In-Process Volume [veh/h]	0	0	0	0	0	0
Site-Generated Trips [veh/h]	172	0	0	488	17	91
Diverted Trips [veh/h]	0	0	0	0	0	0
Pass-by Trips [veh/h]	0	0	0	0	0	0
Existing Site Adjustment Volume [veh/h]	0	0	0	0	0	0
Other Volume [veh/h]	0	0	0	0	0	0
Total Hourly Volume [veh/h]	973	0	0	1976	211	299
Peak Hour Factor	1.0000	1.0000	1.0000	1.0000	1.0000	1.0000
Other Adjustment Factor	1.0000	1.0000	1.0000	1.0000	1.0000	1.0000
Total 15-Minute Volume [veh/h]	243	0	0	494	53	75
Total Analysis Volume [veh/h]	973	0	0	1976	211	299
Pedestrian Volume [ped/h]	0		0		0	
Bicycle Volume [bicycles/h]	0		0		0	

Intersection Settings

Cycle Length [s]	100
Lost time [s]	10.00

Phasing & Timing

Control Type	Permissive	Permissive	Permissive	Permissive	Split	Split
Signal group	2	0	0	6	7	0
Auxiliary Signal Groups						
Lead / Lag	-	-	-	-	Lead	-

Movement, Approach, & Intersection Results

V/C, Movement V/C Ratio	0.20	0.00	0.00	0.41	0.07	0.16
Intersection LOS	B					
Intersection V/C	0.699					

Intersection Level Of Service Report
Intersection 12: Irwindale Avenue (NS) at I-210 EB Ramps (EW)

Control Type:	Signalized	Delay (sec / veh):	-
Analysis Method:	ICU 1	Level Of Service:	E
Analysis Period:	15 minutes	Volume to Capacity (v/c):	0.908

Intersection Setup

Name	Irwindale Avenue			Irwindale Avenue			I-210 EB Ramps			I-210 EB Ramps		
Approach	Northbound			Southbound			Eastbound			Westbound		
Lane Configuration												
Turning Movement	Left	Thru	Right	Left	Thru	Right	Left	Thru	Right	Left	Thru	Right
Lane Width [ft]	12.00	12.00	12.00	12.00	12.00	12.00	12.00	12.00	12.00	12.00	12.00	12.00
No. of Lanes in Pocket	0	0	1	1	0	0	0	0	0	0	0	0
Pocket Length [ft]	100.00	100.00	505.00	330.00	100.00	100.00	100.00	100.00	100.00	100.00	100.00	100.00
Speed [mph]	35.00			35.00			35.00			35.00		
Grade [%]	0.00			0.00			0.00			0.00		
Crosswalk	No			No			No			Yes		

Volumes

Name	Irwindale Avenue			Irwindale Avenue			I-210 EB Ramps			I-210 EB Ramps		
Base Volume Input [veh/h]	0	1034	336	416	792	0	375	0	456	0	0	0
Base Volume Adjustment Factor	1.0000	1.0000	1.0000	1.0000	1.0000	1.0000	1.0000	1.0000	1.0000	1.0000	1.0000	1.0000
Heavy Vehicles Percentage [%]	2.00	2.00	2.00	2.00	2.00	2.00	2.00	2.00	2.00	2.00	2.00	2.00
Growth Rate	1.00	1.01	1.01	1.01	1.01	1.00	1.01	1.00	1.01	1.00	1.00	1.00
In-Process Volume [veh/h]	0	0	0	0	0	0	0	0	0	0	0	0
Site-Generated Trips [veh/h]	0	190	90	183	53	0	148	0	34	0	0	0
Diverted Trips [veh/h]	0	0	0	0	0	0	0	0	0	0	0	0
Pass-by Trips [veh/h]	0	0	0	0	0	0	0	0	0	0	0	0
Existing Site Adjustment Volume [veh/h]	0	0	0	0	0	0	0	0	0	0	0	0
Other Volume [veh/h]	0	0	0	0	0	0	0	0	0	0	0	0
Total Hourly Volume [veh/h]	0	1234	429	603	853	0	527	0	495	0	0	0
Peak Hour Factor	1.0000	1.0000	1.0000	1.0000	1.0000	1.0000	1.0000	1.0000	1.0000	1.0000	1.0000	1.0000
Other Adjustment Factor	1.0000	1.0000	1.0000	1.0000	1.0000	1.0000	1.0000	1.0000	1.0000	1.0000	1.0000	1.0000
Total 15-Minute Volume [veh/h]	0	309	107	151	213	0	132	0	124	0	0	0
Total Analysis Volume [veh/h]	0	1234	429	603	853	0	527	0	495	0	0	0
Pedestrian Volume [ped/h]	0			0			0			0		
Bicycle Volume [bicycles/h]	0			0			0			0		

Intersection Settings

Cycle Length [s]	100
Lost time [s]	10.00

Phasing & Timing

Control Type	Permiss	Permiss	Permiss	Protecte	Permiss	Permiss	Split	Permiss	Split	Permiss	Permiss	Permiss
Signal group	0	2	0	1	6	0	3	0	0	0	0	0
Auxiliary Signal Groups												
Lead / Lag	-	-	-	Lead	-	-	Lead	-	-	-	-	-

Movement, Approach, & Intersection Results

V/C, Movement V/C Ratio	0.00	0.39	0.27	0.19	0.27	0.00	0.16	0.00	0.21	0.00	0.00	0.00
Intersection LOS	E											
Intersection V/C	0.908											

Intersection Level Of Service Report

Intersection 13: Irwindale Avenue (NS) at Jardin De Roca/Irwindale Rd (EW)

Control Type:	Signalized	Delay (sec / veh):	-
Analysis Method:	ICU 1	Level Of Service:	D
Analysis Period:	15 minutes	Volume to Capacity (v/c):	0.828

Intersection Setup

Name	Irwindale Avenue			Irwindale Avenue			Jardin De Roca			Irwindale Road		
Approach	Northbound			Southbound			Eastbound			Westbound		
Lane Configuration												
Turning Movement	Left	Thru	Right	Left	Thru	Right	Left	Thru	Right	Left	Thru	Right
Lane Width [ft]	12.00	12.00	12.00	12.00	12.00	12.00	12.00	12.00	12.00	12.00	12.00	12.00
No. of Lanes in Pocket	1	0	1	1	0	0	0	0	0	0	0	0
Pocket Length [ft]	130.00	100.00	180.00	245.00	100.00	100.00	100.00	100.00	100.00	100.00	100.00	100.00
Speed [mph]	35.00			35.00			25.00			25.00		
Grade [%]	0.00			0.00			0.00			0.00		
Crosswalk	No			No			No			Yes		

Volumes

Name	Irwindale Avenue			Irwindale Avenue			Jardin De Roca			Irwindale Road		
Base Volume Input [veh/h]	28	1163	42	35	1205	7	25	0	80	113	0	178
Base Volume Adjustment Factor	1.0000	1.0000	1.0000	1.0000	1.0000	1.0000	1.0000	1.0000	1.0000	1.0000	1.0000	1.0000
Heavy Vehicles Percentage [%]	2.00	2.00	2.00	2.00	2.00	2.00	2.00	2.00	2.00	2.00	2.00	2.00
Growth Rate	1.01	1.01	1.01	1.01	1.01	1.01	1.01	1.00	1.01	1.01	1.00	1.01
In-Process Volume [veh/h]	0	0	0	0	0	0	0	0	0	0	0	0
Site-Generated Trips [veh/h]	0	187	2	25	62	0	0	0	0	12	0	93
Diverted Trips [veh/h]	0	0	0	0	0	0	0	0	0	0	0	0
Pass-by Trips [veh/h]	0	0	0	0	0	0	0	0	0	0	0	0
Existing Site Adjustment Volume [veh/h]	0	0	0	0	0	0	0	0	0	0	0	0
Other Volume [veh/h]	0	0	0	0	0	0	0	0	0	0	0	0
Total Hourly Volume [veh/h]	28	1362	44	60	1279	7	25	0	81	126	0	273
Peak Hour Factor	1.0000	1.0000	1.0000	1.0000	1.0000	1.0000	1.0000	1.0000	1.0000	1.0000	1.0000	1.0000
Other Adjustment Factor	1.0000	1.0000	1.0000	1.0000	1.0000	1.0000	1.0000	1.0000	1.0000	1.0000	1.0000	1.0000
Total 15-Minute Volume [veh/h]	7	341	11	15	320	2	6	0	20	32	0	68
Total Analysis Volume [veh/h]	28	1362	44	60	1279	7	25	0	81	126	0	273
Pedestrian Volume [ped/h]	0			0			0			0		
Bicycle Volume [bicycles/h]	0			0			0			0		

Intersection Settings

Cycle Length [s]	100
Lost time [s]	10.00

Phasing & Timing

Control Type	Protecte	Permiss	Permiss	Protecte	Permiss	Permiss	Permiss	Permiss	Permiss	Permiss	Permiss	Permiss
Signal group	5	2	0	1	6	0	3	0	0	7	0	0
Auxiliary Signal Groups												
Lead / Lag	Lead	-	-	Lead	-	-	Lead	-	-	Lead	-	-

Movement, Approach, & Intersection Results

V/C, Movement V/C Ratio	0.02	0.43	0.03	0.04	0.40	0.00	0.02	0.00	0.07	0.08	0.00	0.38
Intersection LOS	D											
Intersection V/C	0.828											

Intersection Level Of Service Report

Intersection 14: Irwindale Avenue (NS) at 1st Street (EW)

Control Type:	Signalized	Delay (sec / veh):	-
Analysis Method:	ICU 1	Level Of Service:	A
Analysis Period:	15 minutes	Volume to Capacity (v/c):	0.502

Intersection Setup

Name	Irwindale Avenue			Irwindale Avenue			1st Street			1st Street		
Approach	Northbound			Southbound			Eastbound			Westbound		
Lane Configuration												
Turning Movement	Left	Thru	Right	Left	Thru	Right	Left	Thru	Right	Left	Thru	Right
Lane Width [ft]	12.00	12.00	12.00	12.00	12.00	12.00	12.00	12.00	12.00	12.00	12.00	12.00
No. of Lanes in Pocket	1	0	1	1	0	1	1	0	1	1	0	1
Pocket Length [ft]	100.00	100.00	70.00	120.00	100.00	240.00	90.00	100.00	95.00	75.00	100.00	75.00
Speed [mph]	35.00			35.00			35.00			25.00		
Grade [%]	0.00			0.00			0.00			0.00		
Crosswalk	Yes			No			Yes			Yes		

Volumes

Name	Irwindale Avenue			Irwindale Avenue			1st Street			1st Street		
Base Volume Input [veh/h]	11	878	4	9	1337	53	167	0	43	10	0	6
Base Volume Adjustment Factor	1.0000	1.0000	1.0000	1.0000	1.0000	1.0000	1.0000	1.0000	1.0000	1.0000	1.0000	1.0000
Heavy Vehicles Percentage [%]	2.00	2.00	2.00	2.00	2.00	2.00	2.00	2.00	2.00	2.00	2.00	2.00
Growth Rate	1.01	1.01	1.01	1.01	1.01	1.01	1.01	1.01	1.01	1.01	1.01	1.01
In-Process Volume [veh/h]	0	0	0	0	0	0	0	0	0	0	0	0
Site-Generated Trips [veh/h]	0	137	0	0	66	8	52	0	6	0	0	0
Diverted Trips [veh/h]	0	0	0	0	0	0	0	0	0	0	0	0
Pass-by Trips [veh/h]	0	0	0	0	0	0	0	0	0	0	0	0
Existing Site Adjustment Volume [veh/h]	0	0	0	0	0	0	0	0	0	0	0	0
Other Volume [veh/h]	0	0	0	0	0	0	0	0	0	0	0	0
Total Hourly Volume [veh/h]	11	1024	4	9	1416	62	221	0	49	10	0	6
Peak Hour Factor	1.0000	1.0000	1.0000	1.0000	1.0000	1.0000	1.0000	1.0000	1.0000	1.0000	1.0000	1.0000
Other Adjustment Factor	1.0000	1.0000	1.0000	1.0000	1.0000	1.0000	1.0000	1.0000	1.0000	1.0000	1.0000	1.0000
Total 15-Minute Volume [veh/h]	3	256	1	2	354	16	55	0	12	3	0	2
Total Analysis Volume [veh/h]	11	1024	4	9	1416	62	221	0	49	10	0	6
Pedestrian Volume [ped/h]	0			0			0			0		
Bicycle Volume [bicycles/h]	0			0			0			0		

Intersection Settings

Cycle Length [s]	100
Lost time [s]	10.00

Phasing & Timing

Control Type	Permiss	Permiss	Permiss	Permiss	Permiss	Permiss	Split	Split	Split	Split	Split	Split
Signal group	0	2	0	0	6	0	0	8	0	0	4	0
Auxiliary Signal Groups												
Lead / Lag	-	-	-	-	-	-	-	-	-	-	-	-

Movement, Approach, & Intersection Results

V/C, Movement V/C Ratio	0.01	0.32	0.32	0.01	0.30	0.04	0.07	0.00	0.03	0.01	0.00	0.00
Intersection LOS	A											
Intersection V/C	0.502											

Intersection Level Of Service Report
Intersection 15: Irwindale Avenue (NS) at Gladstone Street (EW)

Control Type:	Signalized	Delay (sec / veh):	-
Analysis Method:	ICU 1	Level Of Service:	B
Analysis Period:	15 minutes	Volume to Capacity (v/c):	0.681

Intersection Setup

Name	Irwindale Avenue			Irwindale Avenue			Gladstone Street			Gladstone Street		
Approach	Northbound			Southbound			Eastbound			Westbound		
Lane Configuration												
Turning Movement	Left	Thru	Right	Left	Thru	Right	Left	Thru	Right	Left	Thru	Right
Lane Width [ft]	12.00	12.00	12.00	12.00	12.00	12.00	12.00	12.00	12.00	12.00	12.00	12.00
No. of Lanes in Pocket	1	0	0	2	0	0	1	0	0	1	0	1
Pocket Length [ft]	120.00	100.00	100.00	210.00	100.00	100.00	50.00	100.00	100.00	200.00	100.00	190.00
Speed [mph]	35.00			35.00			25.00			40.00		
Grade [%]	0.00			0.00			0.00			0.00		
Crosswalk	Yes			Yes			Yes			Yes		

Volumes

Name	Irwindale Avenue			Irwindale Avenue			Gladstone Street			Gladstone Street		
Base Volume Input [veh/h]	1	687	308	530	889	8	5	85	27	150	4	207
Base Volume Adjustment Factor	1.0000	1.0000	1.0000	1.0000	1.0000	1.0000	1.0000	1.0000	1.0000	1.0000	1.0000	1.0000
Heavy Vehicles Percentage [%]	2.00	2.00	2.00	2.00	2.00	2.00	2.00	2.00	2.00	2.00	2.00	2.00
Growth Rate	1.01	1.01	1.01	1.01	1.01	1.01	1.01	1.01	1.01	1.01	1.01	1.01
In-Process Volume [veh/h]	0	0	0	0	0	0	0	0	0	0	0	0
Site-Generated Trips [veh/h]	0	59	21	28	44	0	0	0	0	2	0	78
Diverted Trips [veh/h]	0	0	0	0	0	0	0	0	0	0	0	0
Pass-by Trips [veh/h]	0	0	0	0	0	0	0	0	0	0	0	0
Existing Site Adjustment Volume [veh/h]	0	0	0	0	0	0	0	0	0	0	0	0
Other Volume [veh/h]	0	0	0	0	0	0	0	0	0	0	0	0
Total Hourly Volume [veh/h]	1	753	332	563	942	8	5	86	27	154	4	287
Peak Hour Factor	1.0000	1.0000	1.0000	1.0000	1.0000	1.0000	1.0000	1.0000	1.0000	1.0000	1.0000	1.0000
Other Adjustment Factor	1.0000	1.0000	1.0000	1.0000	1.0000	1.0000	1.0000	1.0000	1.0000	1.0000	1.0000	1.0000
Total 15-Minute Volume [veh/h]	0	188	83	141	236	2	1	22	7	39	1	72
Total Analysis Volume [veh/h]	1	753	332	563	942	8	5	86	27	154	4	287
Pedestrian Volume [ped/h]	0			0			0			0		
Bicycle Volume [bicycles/h]	0			0			0			0		

Intersection Settings

Cycle Length [s]	100
Lost time [s]	10.00

Phasing & Timing

Control Type	Protecte	Permiss	Permiss	Protecte	Permiss	Permiss	Permiss	Permiss	Permiss	Permiss	Permiss	Overlap
Signal group	5	2	0	1	6	0	0	8	0	0	4	4
Auxiliary Signal Groups												1,4
Lead / Lag	Lead	-	-	Lead	-	-	-	-	-	-	-	-

Movement, Approach, & Intersection Results

V/C, Movement V/C Ratio	0.00	0.24	0.21	0.18	0.30	0.30	0.00	0.05	0.02	0.10	0.00	0.00
Intersection LOS	B											
Intersection V/C	0.681											

Intersection Level Of Service Report

Intersection 16: Irwindale Avenue (NS) at Arrow Highway (EW)

Control Type:	Signalized	Delay (sec / veh):	-
Analysis Method:	ICU 1	Level Of Service:	D
Analysis Period:	15 minutes	Volume to Capacity (v/c):	0.800

Intersection Setup

Name	Irwindale Avenue			Irwindale Avenue			Arrow Highway			Arrow Highway		
Approach	Northbound			Southbound			Eastbound			Westbound		
Lane Configuration												
Turning Movement	Left	Thru	Right	Left	Thru	Right	Left	Thru	Right	Left	Thru	Right
Lane Width [ft]	12.00	12.00	12.00	12.00	12.00	12.00	12.00	12.00	12.00	12.00	12.00	12.00
No. of Lanes in Pocket	1	0	0	1	0	1	2	0	0	1	0	0
Pocket Length [ft]	175.00	100.00	100.00	185.00	100.00	185.00	205.00	100.00	100.00	335.00	100.00	100.00
Speed [mph]	35.00			35.00			45.00			45.00		
Grade [%]	0.00			0.00			0.00			0.00		
Crosswalk	Yes			Yes			Yes			Yes		

Volumes

Name	Irwindale Avenue			Irwindale Avenue			Arrow Highway			Arrow Highway		
Base Volume Input [veh/h]	91	488	100	191	714	363	373	1315	73	99	475	63
Base Volume Adjustment Factor	1.0000	1.0000	1.0000	1.0000	1.0000	1.0000	1.0000	1.0000	1.0000	1.0000	1.0000	1.0000
Heavy Vehicles Percentage [%]	2.00	2.00	2.00	2.00	2.00	2.00	2.00	2.00	2.00	2.00	2.00	2.00
Growth Rate	1.01	1.01	1.01	1.01	1.01	1.01	1.01	1.01	1.01	1.01	1.01	1.01
In-Process Volume [veh/h]	0	0	0	0	0	0	0	0	0	0	0	0
Site-Generated Trips [veh/h]	6	13	1	8	21	17	10	96	10	13	231	57
Diverted Trips [veh/h]	0	0	0	0	0	0	0	0	0	0	0	0
Pass-by Trips [veh/h]	0	0	0	0	0	0	0	0	0	0	0	0
Existing Site Adjustment Volume [veh/h]	0	0	0	0	0	0	0	0	0	0	0	0
Other Volume [veh/h]	0	0	0	0	0	0	0	0	0	0	0	0
Total Hourly Volume [veh/h]	98	506	102	201	742	384	387	1424	84	113	711	121
Peak Hour Factor	1.0000	1.0000	1.0000	1.0000	1.0000	1.0000	1.0000	1.0000	1.0000	1.0000	1.0000	1.0000
Other Adjustment Factor	1.0000	1.0000	1.0000	1.0000	1.0000	1.0000	1.0000	1.0000	1.0000	1.0000	1.0000	1.0000
Total 15-Minute Volume [veh/h]	25	127	26	50	186	96	97	356	21	28	178	30
Total Analysis Volume [veh/h]	98	506	102	201	742	384	387	1424	84	113	711	121
Pedestrian Volume [ped/h]	0			0			0			0		
Bicycle Volume [bicycles/h]	0			0			0			0		

Intersection Settings

Cycle Length [s]	100
Lost time [s]	10.00

Phasing & Timing

Control Type	Protecte	Permiss	Permiss	Protecte	Permiss	Overlap	Protecte	Permiss	Permiss	Protecte	Permiss	Permiss
Signal group	5	2	0	1	6	6	3	8	0	7	4	0
Auxiliary Signal Groups						3,6						
Lead / Lag	Lead	-	-	Lead	-	-	Lead	-	-	Lead	-	-

Movement, Approach, & Intersection Results

V/C, Movement V/C Ratio	0.06	0.19	0.19	0.13	0.23	0.12	0.12	0.31	0.31	0.07	0.26	0.26
Intersection LOS	D											
Intersection V/C	0.800											

Intersection Level Of Service Report

Intersection 17: Vincent Avenue (NS) at Gladstone Street (EW)

Control Type:	Signalized	Delay (sec / veh):	-
Analysis Method:	ICU 1	Level Of Service:	E
Analysis Period:	15 minutes	Volume to Capacity (v/c):	0.937

Intersection Setup

Name	Vincent Avenue			Vincent Avenue			Gladstone Street			Gladstone Street		
Approach	Northbound			Southbound			Eastbound			Westbound		
Lane Configuration												
Turning Movement	Left	Thru	Right	Left	Thru	Right	Left	Thru	Right	Left	Thru	Right
Lane Width [ft]	12.00	12.00	12.00	12.00	12.00	12.00	12.00	12.00	12.00	12.00	12.00	12.00
No. of Lanes in Pocket	1	0	0	0	0	0	2	0	0	1	0	0
Pocket Length [ft]	195.00	100.00	100.00	100.00	100.00	100.00	230.00	100.00	100.00	175.00	100.00	100.00
Speed [mph]	45.00			25.00			45.00			45.00		
Grade [%]	0.00			0.00			0.00			0.00		
Crosswalk	Yes			Yes			No			Yes		

Volumes

Name	Vincent Avenue			Vincent Avenue			Gladstone Street			Gladstone Street		
Base Volume Input [veh/h]	113	24	475	16	25	18	14	862	160	150	203	3
Base Volume Adjustment Factor	1.0000	1.0000	1.0000	1.0000	1.0000	1.0000	1.0000	1.0000	1.0000	1.0000	1.0000	1.0000
Heavy Vehicles Percentage [%]	2.00	2.00	2.00	2.00	2.00	2.00	2.00	2.00	2.00	2.00	2.00	2.00
Growth Rate	1.01	1.01	1.01	1.01	1.01	1.01	1.01	1.01	1.01	1.01	1.01	1.01
In-Process Volume [veh/h]	0	0	0	0	0	0	0	0	0	0	0	0
Site-Generated Trips [veh/h]	74	0	106	0	0	0	0	16	33	19	6	0
Diverted Trips [veh/h]	0	0	0	0	0	0	0	0	0	0	0	0
Pass-by Trips [veh/h]	0	0	0	0	0	0	0	0	0	0	0	0
Existing Site Adjustment Volume [veh/h]	0	0	0	0	0	0	0	0	0	0	0	0
Other Volume [veh/h]	0	0	0	0	0	0	0	0	0	0	0	0
Total Hourly Volume [veh/h]	188	24	586	16	25	18	14	887	195	171	211	3
Peak Hour Factor	1.0000	1.0000	1.0000	1.0000	1.0000	1.0000	1.0000	1.0000	1.0000	1.0000	1.0000	1.0000
Other Adjustment Factor	1.0000	1.0000	1.0000	1.0000	1.0000	1.0000	1.0000	1.0000	1.0000	1.0000	1.0000	1.0000
Total 15-Minute Volume [veh/h]	47	6	147	4	6	5	4	222	49	43	53	1
Total Analysis Volume [veh/h]	188	24	586	16	25	18	14	887	195	171	211	3
Pedestrian Volume [ped/h]	0			0			0			0		
Bicycle Volume [bicycles/h]	0			0			0			0		

Intersection Settings

Cycle Length [s]	100
Lost time [s]	10.00

Phasing & Timing

Control Type	Split	Split	Split	Split	Split	Split	Protecte	Permiss	Permiss	Protecte	Permiss	Permiss
Signal group	0	2	0	0	6	0	3	8	0	7	4	0
Auxiliary Signal Groups												
Lead / Lag	-	-	-	-	-	-	Lead	-	-	Lead	-	-

Movement, Approach, & Intersection Results

V/C, Movement V/C Ratio	0.12	0.02	0.37	0.01	0.03	0.03	0.00	0.34	0.34	0.11	0.07	0.07
Intersection LOS	E											
Intersection V/C	0.937											

Intersection Level Of Service Report

Intersection 18: Vincent Avenue (NS) at Arrow Highway (EW)

Control Type:	Signalized	Delay (sec / veh):	-
Analysis Method:	ICU 1	Level Of Service:	E
Analysis Period:	15 minutes	Volume to Capacity (v/c):	0.913

Intersection Setup

Name	Vincent Avenue			Vincent Avenue			Arrow Highway			Arrow Highway		
Approach	Northbound			Southbound			Eastbound			Westbound		
Lane Configuration												
Turning Movement	Left	Thru	Right	Left	Thru	Right	Left	Thru	Right	Left	Thru	Right
Lane Width [ft]	12.00	12.00	12.00	12.00	12.00	12.00	12.00	12.00	12.00	12.00	12.00	12.00
No. of Lanes in Pocket	1	0	0	1	0	0	1	0	0	1	0	0
Pocket Length [ft]	200.00	100.00	100.00	200.00	100.00	100.00	215.00	100.00	100.00	160.00	100.00	100.00
Speed [mph]	45.00			45.00			45.00			45.00		
Grade [%]	0.00			0.00			0.00			0.00		
Crosswalk	Yes			Yes			Yes			Yes		

Volumes

Name	Vincent Avenue			Vincent Avenue			Arrow Highway			Arrow Highway		
Base Volume Input [veh/h]	78	314	143	38	276	84	228	1417	171	106	485	40
Base Volume Adjustment Factor	1.0000	1.0000	1.0000	1.0000	1.0000	1.0000	1.0000	1.0000	1.0000	1.0000	1.0000	1.0000
Heavy Vehicles Percentage [%]	2.00	2.00	2.00	2.00	2.00	2.00	2.00	2.00	2.00	2.00	2.00	2.00
Growth Rate	1.01	1.01	1.01	1.01	1.01	1.01	1.01	1.01	1.01	1.01	1.01	1.01
In-Process Volume [veh/h]	0	0	0	0	0	0	0	0	0	0	0	0
Site-Generated Trips [veh/h]	143	150	25	5	47	42	7	51	47	5	33	1
Diverted Trips [veh/h]	0	0	0	0	0	0	0	0	0	0	0	0
Pass-by Trips [veh/h]	0	0	0	0	0	0	0	0	0	0	0	0
Existing Site Adjustment Volume [veh/h]	0	0	0	0	0	0	0	0	0	0	0	0
Other Volume [veh/h]	0	0	0	0	0	0	0	0	0	0	0	0
Total Hourly Volume [veh/h]	222	467	169	43	326	127	237	1482	220	112	523	41
Peak Hour Factor	1.0000	1.0000	1.0000	1.0000	1.0000	1.0000	1.0000	1.0000	1.0000	1.0000	1.0000	1.0000
Other Adjustment Factor	1.0000	1.0000	1.0000	1.0000	1.0000	1.0000	1.0000	1.0000	1.0000	1.0000	1.0000	1.0000
Total 15-Minute Volume [veh/h]	56	117	42	11	82	32	59	371	55	28	131	10
Total Analysis Volume [veh/h]	222	467	169	43	326	127	237	1482	220	112	523	41
Pedestrian Volume [ped/h]	0			0			0			0		
Bicycle Volume [bicycles/h]	0			0			0			0		

Intersection Settings

Cycle Length [s]	100
Lost time [s]	10.00

Phasing & Timing

Control Type	Permiss	Permiss	Permiss	Permiss	Permiss	Permiss	Permiss	Permiss	Permiss	Permiss	Permiss	Permiss
Signal group	0	2	0	0	6	0	0	8	0	0	4	0
Auxiliary Signal Groups												
Lead / Lag	-	-	-	-	-	-	-	-	-	-	-	-

Movement, Approach, & Intersection Results

V/C, Movement V/C Ratio	0.14	0.20	0.20	0.03	0.14	0.14	0.15	0.46	0.14	0.07	0.16	0.03
Intersection LOS	E											
Intersection V/C	0.913											

Intersection Level Of Service Report
Intersection 19: Vincent Avenue (NS) at Project North Driveway (EW)

Control Type:	Two-way stop	Delay (sec / veh):	18.4
Analysis Method:	HCM 6th Edition	Level Of Service:	C
Analysis Period:	15 minutes	Volume to Capacity (v/c):	0.374

Intersection Setup

Name	Vincent Avenue		Vincent Avenue		Project North Driveway	
Approach	Northbound		Southbound		Eastbound	
Lane Configuration						
Turning Movement	Left	Thru	Thru	Right	Left	Right
Lane Width [ft]	12.00	12.00	12.00	12.00	12.00	12.00
No. of Lanes in Pocket	0	0	0	0	0	0
Pocket Length [ft]	100.00	100.00	100.00	100.00	100.00	100.00
Speed [mph]	45.00		45.00		15.00	
Grade [%]	0.00		0.00		0.00	
Crosswalk	No		No		No	

Volumes

Name	Vincent Avenue		Vincent Avenue		Project North Driveway	
Base Volume Input [veh/h]	0	535	551	0	0	0
Base Volume Adjustment Factor	1.0000	1.0000	1.0000	1.0000	1.0000	1.0000
Heavy Vehicles Percentage [%]	2.00	2.00	2.00	2.00	2.00	2.00
Growth Rate	1.00	1.01	1.01	1.00	1.00	1.00
In-Process Volume [veh/h]	0	0	0	0	0	0
Site-Generated Trips [veh/h]	5	159	75	24	159	31
Diverted Trips [veh/h]	0	0	0	0	0	0
Pass-by Trips [veh/h]	0	0	0	0	0	0
Existing Site Adjustment Volume [veh/h]	0	0	0	0	0	0
Other Volume [veh/h]	0	0	0	0	0	0
Total Hourly Volume [veh/h]	5	699	632	24	159	31
Peak Hour Factor	1.0000	1.0000	1.0000	1.0000	1.0000	1.0000
Other Adjustment Factor	1.0000	1.0000	1.0000	1.0000	1.0000	1.0000
Total 15-Minute Volume [veh/h]	1	175	158	6	40	8
Total Analysis Volume [veh/h]	5	699	632	24	159	31
Pedestrian Volume [ped/h]	0		0		0	

Intersection Settings

Priority Scheme	Free	Free	Stop
Flared Lane			
Storage Area [veh]	0	0	0
Two-Stage Gap Acceptance			Yes
Number of Storage Spaces in Median	0	0	2

Movement, Approach, & Intersection Results

V/C, Movement V/C Ratio	0.01	0.01	0.01	0.00	0.37	0.05
d_M, Delay for Movement [s/veh]	8.90	0.00	0.00	0.00	18.44	10.55
Movement LOS	A	A	A	A	C	B
95th-Percentile Queue Length [veh/ln]	0.02	0.00	0.00	0.00	1.71	0.14
95th-Percentile Queue Length [ft/ln]	0.41	0.00	0.00	0.00	42.63	3.58
d_A, Approach Delay [s/veh]	0.06		0.00		17.15	
Approach LOS	A		A		C	
d_I, Intersection Delay [s/veh]	2.13					
Intersection LOS	C					

Intersection Level Of Service Report
Intersection 20: Vincent Avenue (NS) at Project South Driveway (EW)

Control Type:	Two-way stop	Delay (sec / veh):	17.2
Analysis Method:	HCM 6th Edition	Level Of Service:	C
Analysis Period:	15 minutes	Volume to Capacity (v/c):	0.318

Intersection Setup

Name	Vincent Avenue		Vincent Avenue		Project South Driveway	
Approach	Northbound		Southbound		Eastbound	
Lane Configuration						
Turning Movement	Left	Thru	Thru	Right	Left	Right
Lane Width [ft]	12.00	12.00	12.00	12.00	12.00	12.00
No. of Lanes in Pocket	0	0	0	0	0	0
Pocket Length [ft]	100.00	100.00	100.00	100.00	100.00	100.00
Speed [mph]	45.00		45.00		15.00	
Grade [%]	0.00		0.00		0.00	
Crosswalk	No		No		No	

Volumes

Name	Vincent Avenue		Vincent Avenue		Project South Driveway	
Base Volume Input [veh/h]	0	535	551	0	0	0
Base Volume Adjustment Factor	1.0000	1.0000	1.0000	1.0000	1.0000	1.0000
Heavy Vehicles Percentage [%]	2.00	2.00	2.00	2.00	2.00	2.00
Growth Rate	1.00	1.01	1.01	1.00	1.00	1.00
In-Process Volume [veh/h]	0	0	0	0	0	0
Site-Generated Trips [veh/h]	8	27	85	21	137	52
Diverted Trips [veh/h]	0	0	0	0	0	0
Pass-by Trips [veh/h]	0	0	0	0	0	0
Existing Site Adjustment Volume [veh/h]	0	0	0	0	0	0
Other Volume [veh/h]	0	0	0	0	0	0
Total Hourly Volume [veh/h]	8	567	642	21	137	52
Peak Hour Factor	1.0000	1.0000	1.0000	1.0000	1.0000	1.0000
Other Adjustment Factor	1.0000	1.0000	1.0000	1.0000	1.0000	1.0000
Total 15-Minute Volume [veh/h]	2	142	161	5	34	13
Total Analysis Volume [veh/h]	8	567	642	21	137	52
Pedestrian Volume [ped/h]	0		0		0	

Intersection Settings

Priority Scheme	Free	Free	Stop
Flared Lane			
Storage Area [veh]	0	0	0
Two-Stage Gap Acceptance			Yes
Number of Storage Spaces in Median	0	0	2

Movement, Approach, & Intersection Results

V/C, Movement V/C Ratio	0.01	0.01	0.01	0.00	0.32	0.08
d_M, Delay for Movement [s/veh]	8.94	0.00	0.00	0.00	17.19	10.78
Movement LOS	A	A	A	A	C	B
95th-Percentile Queue Length [veh/ln]	0.03	0.00	0.00	0.00	1.35	0.25
95th-Percentile Queue Length [ft/ln]	0.66	0.00	0.00	0.00	33.69	6.24
d_A, Approach Delay [s/veh]	0.12		0.00		15.43	
Approach LOS	A		A		C	
d_I, Intersection Delay [s/veh]	2.09					
Intersection LOS	C					

Intersection Level Of Service Report
Intersection 21: Vincent Avenue (NS) at Cypress Street (EW)

Control Type:	Signalized	Delay (sec / veh):	-
Analysis Method:	ICU 1	Level Of Service:	C
Analysis Period:	15 minutes	Volume to Capacity (v/c):	0.742

Intersection Setup

Name	Vincent Avenue			Vincent Avenue			Cypress Street			Cypress Street		
Approach	Northbound			Southbound			Eastbound			Westbound		
Lane Configuration												
Turning Movement	Left	Thru	Right	Left	Thru	Right	Left	Thru	Right	Left	Thru	Right
Lane Width [ft]	12.00	12.00	12.00	12.00	12.00	12.00	12.00	12.00	12.00	12.00	12.00	12.00
No. of Lanes in Pocket	1	0	0	1	0	0	1	0	0	1	0	0
Pocket Length [ft]	120.00	100.00	100.00	120.00	100.00	100.00	100.00	100.00	100.00	150.00	100.00	100.00
Speed [mph]	40.00			45.00			40.00			40.00		
Grade [%]	0.00			0.00			0.00			0.00		
Crosswalk	Yes			Yes			Yes			Yes		

Volumes

Name	Vincent Avenue			Vincent Avenue			Cypress Street			Cypress Street		
Base Volume Input [veh/h]	59	447	138	59	448	30	88	984	112	92	295	41
Base Volume Adjustment Factor	1.0000	1.0000	1.0000	1.0000	1.0000	1.0000	1.0000	1.0000	1.0000	1.0000	1.0000	1.0000
Heavy Vehicles Percentage [%]	2.00	2.00	2.00	2.00	2.00	2.00	2.00	2.00	2.00	2.00	2.00	2.00
Growth Rate	1.01	1.01	1.01	1.01	1.01	1.01	1.01	1.01	1.01	1.01	1.01	1.01
In-Process Volume [veh/h]	0	0	0	0	0	0	0	0	0	0	0	0
Site-Generated Trips [veh/h]	0	32	0	9	120	8	1	0	0	0	0	2
Diverted Trips [veh/h]	0	0	0	0	0	0	0	0	0	0	0	0
Pass-by Trips [veh/h]	0	0	0	0	0	0	0	0	0	0	0	0
Existing Site Adjustment Volume [veh/h]	0	0	0	0	0	0	0	0	0	0	0	0
Other Volume [veh/h]	0	0	0	0	0	0	0	0	0	0	0	0
Total Hourly Volume [veh/h]	60	483	139	69	572	38	90	994	113	93	298	43
Peak Hour Factor	1.0000	1.0000	1.0000	1.0000	1.0000	1.0000	1.0000	1.0000	1.0000	1.0000	1.0000	1.0000
Other Adjustment Factor	1.0000	1.0000	1.0000	1.0000	1.0000	1.0000	1.0000	1.0000	1.0000	1.0000	1.0000	1.0000
Total 15-Minute Volume [veh/h]	15	121	35	17	143	10	23	249	28	23	75	11
Total Analysis Volume [veh/h]	60	483	139	69	572	38	90	994	113	93	298	43
Pedestrian Volume [ped/h]	0			0			0			0		
Bicycle Volume [bicycles/h]	0			0			0			0		

Intersection Settings

Cycle Length [s]	100
Lost time [s]	10.00

Phasing & Timing

Control Type	Permiss	Permiss	Permiss	Permiss	Permiss	Permiss	Permiss	Permiss	Permiss	Permiss	Permiss	Permiss
Signal group	0	2	0	0	6	0	0	8	0	0	4	0
Auxiliary Signal Groups												
Lead / Lag	-	-	-	-	-	-	-	-	-	-	-	-

Movement, Approach, & Intersection Results

V/C, Movement V/C Ratio	0.04	0.19	0.19	0.04	0.19	0.19	0.06	0.35	0.35	0.06	0.11	0.11
Intersection LOS	C											
Intersection V/C	0.742											

Intersection Level Of Service Report

Intersection 22: Vincent Avenue (NS) at San Bernardino Road (EW)

Control Type:	Signalized	Delay (sec / veh):	-
Analysis Method:	ICU 1	Level Of Service:	B
Analysis Period:	15 minutes	Volume to Capacity (v/c):	0.695

Intersection Setup

Name	Vincent Avenue			Vincent Avenue			San Bernardino Road			San Berardino Road		
Approach	Northbound			Southbound			Eastbound			Westbound		
Lane Configuration												
Turning Movement	Left	Thru	Right	Left	Thru	Right	Left	Thru	Right	Left	Thru	Right
Lane Width [ft]	12.00	12.00	12.00	12.00	12.00	12.00	12.00	12.00	12.00	12.00	12.00	12.00
No. of Lanes in Pocket	1	0	0	1	0	0	1	0	0	1	0	0
Pocket Length [ft]	120.00	100.00	100.00	150.00	100.00	100.00	150.00	100.00	100.00	165.00	100.00	100.00
Speed [mph]	35.00			40.00			40.00			40.00		
Grade [%]	0.00			0.00			0.00			0.00		
Crosswalk	Yes			Yes			Yes			Yes		

Volumes

Name	Vincent Avenue			Vincent Avenue			San Bernardino Road			San Berardino Road		
Base Volume Input [veh/h]	94	563	77	76	574	48	112	651	110	98	273	80
Base Volume Adjustment Factor	1.0000	1.0000	1.0000	1.0000	1.0000	1.0000	1.0000	1.0000	1.0000	1.0000	1.0000	1.0000
Heavy Vehicles Percentage [%]	2.00	2.00	2.00	2.00	2.00	2.00	2.00	2.00	2.00	2.00	2.00	2.00
Growth Rate	1.01	1.01	1.01	1.01	1.01	1.01	1.01	1.01	1.01	1.01	1.01	1.01
In-Process Volume [veh/h]	0	0	0	0	0	0	0	0	0	0	0	0
Site-Generated Trips [veh/h]	0	32	0	0	120	0	0	0	0	0	0	0
Diverted Trips [veh/h]	0	0	0	0	0	0	0	0	0	0	0	0
Pass-by Trips [veh/h]	0	0	0	0	0	0	0	0	0	0	0	0
Existing Site Adjustment Volume [veh/h]	0	0	0	0	0	0	0	0	0	0	0	0
Other Volume [veh/h]	0	0	0	0	0	0	0	0	0	0	0	0
Total Hourly Volume [veh/h]	95	601	78	77	700	48	113	658	111	99	276	81
Peak Hour Factor	1.0000	1.0000	1.0000	1.0000	1.0000	1.0000	1.0000	1.0000	1.0000	1.0000	1.0000	1.0000
Other Adjustment Factor	1.0000	1.0000	1.0000	1.0000	1.0000	1.0000	1.0000	1.0000	1.0000	1.0000	1.0000	1.0000
Total 15-Minute Volume [veh/h]	24	150	20	19	175	12	28	165	28	25	69	20
Total Analysis Volume [veh/h]	95	601	78	77	700	48	113	658	111	99	276	81
Pedestrian Volume [ped/h]	0			0			0			0		
Bicycle Volume [bicycles/h]	0			0			0			0		

Intersection Settings

Cycle Length [s]	100
Lost time [s]	10.00

Phasing & Timing

Control Type	Permiss	Permiss	Permiss	Permiss	Permiss	Permiss	Protecte	Permiss	Permiss	Protecte	Permiss	Permiss
Signal group	0	2	0	0	6	0	3	8	0	7	4	0
Auxiliary Signal Groups												
Lead / Lag	-	-	-	-	-	-	Lead	-	-	Lead	-	-

Movement, Approach, & Intersection Results

V/C, Movement V/C Ratio	0.06	0.21	0.21	0.05	0.23	0.23	0.07	0.24	0.24	0.06	0.11	0.11
Intersection LOS	B											
Intersection V/C	0.695											

Intersection Level Of Service Report
Intersection 23: Vincent Avenue (NS) at Badillo Street (EW)

Control Type:	Signalized	Delay (sec / veh):	-
Analysis Method:	ICU 1	Level Of Service:	C
Analysis Period:	15 minutes	Volume to Capacity (v/c):	0.791

Intersection Setup

Name	Vincent Avenue			Vincent Avenue			Dadillo Street			Badillo Street		
Approach	Northbound			Southbound			Eastbound			Westbound		
Lane Configuration												
Turning Movement	Left	Thru	Right	Left	Thru	Right	Left	Thru	Right	Left	Thru	Right
Lane Width [ft]	12.00	12.00	12.00	12.00	12.00	12.00	12.00	12.00	12.00	12.00	12.00	12.00
No. of Lanes in Pocket	1	0	0	1	0	0	1	0	0	1	0	0
Pocket Length [ft]	200.00	100.00	100.00	190.00	100.00	100.00	195.00	100.00	100.00	195.00	100.00	100.00
Speed [mph]	40.00			35.00			45.00			45.00		
Grade [%]	0.00			0.00			0.00			0.00		
Crosswalk	Yes			Yes			Yes			Yes		

Volumes

Name	Vincent Avenue			Vincent Avenue			Dadillo Street			Badillo Street		
Base Volume Input [veh/h]	93	584	144	62	702	53	65	953	172	130	421	56
Base Volume Adjustment Factor	1.0000	1.0000	1.0000	1.0000	1.0000	1.0000	1.0000	1.0000	1.0000	1.0000	1.0000	1.0000
Heavy Vehicles Percentage [%]	2.00	2.00	2.00	2.00	2.00	2.00	2.00	2.00	2.00	2.00	2.00	2.00
Growth Rate	1.01	1.01	1.01	1.01	1.01	1.01	1.01	1.01	1.01	1.01	1.01	1.01
In-Process Volume [veh/h]	0	0	0	0	0	0	0	0	0	0	0	0
Site-Generated Trips [veh/h]	0	22	1	24	88	8	1	0	0	0	0	9
Diverted Trips [veh/h]	0	0	0	0	0	0	0	0	0	0	0	0
Pass-by Trips [veh/h]	0	0	0	0	0	0	0	0	0	0	0	0
Existing Site Adjustment Volume [veh/h]	0	0	0	0	0	0	0	0	0	0	0	0
Other Volume [veh/h]	0	0	0	0	0	0	0	0	0	0	0	0
Total Hourly Volume [veh/h]	94	612	146	87	797	62	67	963	174	131	425	66
Peak Hour Factor	1.0000	1.0000	1.0000	1.0000	1.0000	1.0000	1.0000	1.0000	1.0000	1.0000	1.0000	1.0000
Other Adjustment Factor	1.0000	1.0000	1.0000	1.0000	1.0000	1.0000	1.0000	1.0000	1.0000	1.0000	1.0000	1.0000
Total 15-Minute Volume [veh/h]	24	153	37	22	199	16	17	241	44	33	106	17
Total Analysis Volume [veh/h]	94	612	146	87	797	62	67	963	174	131	425	66
Pedestrian Volume [ped/h]	0			0			0			0		
Bicycle Volume [bicycles/h]	0			0			0			0		

Intersection Settings

Cycle Length [s]	100
Lost time [s]	10.00

Phasing & Timing

Control Type	Protecte	Permiss	Permiss	Protecte	Permiss	Permiss	Protecte	Permiss	Permiss	Protecte	Permiss	Permiss
Signal group	5	2	0	1	6	0	3	8	0	7	4	0
Auxiliary Signal Groups												
Lead / Lag	Lead	-	-	Lead	-	-	Lead	-	-	Lead	-	-

Movement, Approach, & Intersection Results

V/C, Movement V/C Ratio	0.06	0.19	0.09	0.05	0.25	0.04	0.04	0.30	0.11	0.08	0.13	0.04
Intersection LOS	C											
Intersection V/C	0.791											

Intersection Level Of Service Report
Intersection 24: Vincent Avenue (NS) at Puente Avenue (EW)

Control Type:	Signalized	Delay (sec / veh):	-
Analysis Method:	ICU 1	Level Of Service:	B
Analysis Period:	15 minutes	Volume to Capacity (v/c):	0.660

Intersection Setup

Name	Vincent Avenue			Vincent Avenue			Puente Avenue			Puente Avenue		
Approach	Northbound			Southbound			Eastbound			Westbound		
Lane Configuration												
Turning Movement	Left	Thru	Right	Left	Thru	Right	Left	Thru	Right	Left	Thru	Right
Lane Width [ft]	12.00	12.00	12.00	12.00	12.00	12.00	12.00	12.00	12.00	12.00	12.00	12.00
No. of Lanes in Pocket	1	0	0	1	0	0	0	0	0	0	0	0
Pocket Length [ft]	195.00	100.00	100.00	195.00	100.00	100.00	100.00	100.00	100.00	100.00	100.00	100.00
Speed [mph]	40.00			40.00			40.00			40.00		
Grade [%]	0.00			0.00			0.00			0.00		
Crosswalk	Yes			Yes			Yes			Yes		

Volumes

Name	Vincent Avenue			Vincent Avenue			Puente Avenue			Puente Avenue		
Base Volume Input [veh/h]	73	727	78	63	832	60	75	540	67	48	265	37
Base Volume Adjustment Factor	1.0000	1.0000	1.0000	1.0000	1.0000	1.0000	1.0000	1.0000	1.0000	1.0000	1.0000	1.0000
Heavy Vehicles Percentage [%]	2.00	2.00	2.00	2.00	2.00	2.00	2.00	2.00	2.00	2.00	2.00	2.00
Growth Rate	1.01	1.01	1.01	1.01	1.01	1.01	1.01	1.01	1.01	1.01	1.01	1.01
In-Process Volume [veh/h]	0	0	0	0	0	0	0	0	0	0	0	0
Site-Generated Trips [veh/h]	0	23	0	0	88	0	0	0	0	0	0	0
Diverted Trips [veh/h]	0	0	0	0	0	0	0	0	0	0	0	0
Pass-by Trips [veh/h]	0	0	0	0	0	0	0	0	0	0	0	0
Existing Site Adjustment Volume [veh/h]	0	0	0	0	0	0	0	0	0	0	0	0
Other Volume [veh/h]	0	0	0	0	0	0	0	0	0	0	0	0
Total Hourly Volume [veh/h]	74	757	79	64	928	61	76	545	68	48	268	37
Peak Hour Factor	1.0000	1.0000	1.0000	1.0000	1.0000	1.0000	1.0000	1.0000	1.0000	1.0000	1.0000	1.0000
Other Adjustment Factor	1.0000	1.0000	1.0000	1.0000	1.0000	1.0000	1.0000	1.0000	1.0000	1.0000	1.0000	1.0000
Total 15-Minute Volume [veh/h]	19	189	20	16	232	15	19	136	17	12	67	9
Total Analysis Volume [veh/h]	74	757	79	64	928	61	76	545	68	48	268	37
Pedestrian Volume [ped/h]	0			0			0			0		
Bicycle Volume [bicycles/h]	0			0			0			0		

Intersection Settings

Cycle Length [s]	100
Lost time [s]	10.00

Phasing & Timing

Control Type	Permiss	Permiss	Permiss	Permiss	Permiss	Permiss	Permiss	Permiss	Permiss	Permiss	Permiss	Permiss
Signal group	0	2	0	0	6	0	0	8	0	0	4	0
Auxiliary Signal Groups												
Lead / Lag	-	-	-	-	-	-	-	-	-	-	-	-

Movement, Approach, & Intersection Results

V/C, Movement V/C Ratio	0.05	0.24	0.05	0.04	0.29	0.04	0.05	0.19	0.04	0.03	0.10	0.02
Intersection LOS	B											
Intersection V/C	0.660											

Intersection Level Of Service Report

Intersection 25: Vincent Avenue (NS) at Rowland Avenue (EW)

Control Type:	Signalized	Delay (sec / veh):	-
Analysis Method:	ICU 1	Level Of Service:	B
Analysis Period:	15 minutes	Volume to Capacity (v/c):	0.624

Intersection Setup

Name	Vincent Avenue			Vincent Avenue			Rowland Avenue			Rowland Avenue		
Approach	Northbound			Southbound			Eastbound			Westbound		
Lane Configuration												
Turning Movement	Left	Thru	Right	Left	Thru	Right	Left	Thru	Right	Left	Thru	Right
Lane Width [ft]	12.00	12.00	12.00	12.00	12.00	12.00	12.00	12.00	12.00	12.00	12.00	12.00
No. of Lanes in Pocket	1	0	0	1	0	0	0	0	0	0	0	0
Pocket Length [ft]	145.00	100.00	100.00	125.00	100.00	100.00	100.00	100.00	100.00	100.00	100.00	100.00
Speed [mph]	35.00			40.00			35.00			35.00		
Grade [%]	0.00			0.00			0.00			0.00		
Crosswalk	Yes			Yes			Yes			Yes		

Volumes

Name	Vincent Avenue			Vincent Avenue			Rowland Avenue			Rowland Avenue		
Base Volume Input [veh/h]	33	840	113	98	849	18	14	206	49	69	93	31
Base Volume Adjustment Factor	1.0000	1.0000	1.0000	1.0000	1.0000	1.0000	1.0000	1.0000	1.0000	1.0000	1.0000	1.0000
Heavy Vehicles Percentage [%]	2.00	2.00	2.00	2.00	2.00	2.00	2.00	2.00	2.00	2.00	2.00	2.00
Growth Rate	1.01	1.01	1.01	1.01	1.01	1.01	1.01	1.01	1.01	1.01	1.01	1.01
In-Process Volume [veh/h]	0	0	0	0	0	0	0	0	0	0	0	0
Site-Generated Trips [veh/h]	0	14	0	14	65	9	3	0	0	0	0	6
Diverted Trips [veh/h]	0	0	0	0	0	0	0	0	0	0	0	0
Pass-by Trips [veh/h]	0	0	0	0	0	0	0	0	0	0	0	0
Existing Site Adjustment Volume [veh/h]	0	0	0	0	0	0	0	0	0	0	0	0
Other Volume [veh/h]	0	0	0	0	0	0	0	0	0	0	0	0
Total Hourly Volume [veh/h]	33	862	114	113	922	27	17	208	49	70	94	37
Peak Hour Factor	1.0000	1.0000	1.0000	1.0000	1.0000	1.0000	1.0000	1.0000	1.0000	1.0000	1.0000	1.0000
Other Adjustment Factor	1.0000	1.0000	1.0000	1.0000	1.0000	1.0000	1.0000	1.0000	1.0000	1.0000	1.0000	1.0000
Total 15-Minute Volume [veh/h]	8	216	29	28	231	7	4	52	12	18	24	9
Total Analysis Volume [veh/h]	33	862	114	113	922	27	17	208	49	70	94	37
Pedestrian Volume [ped/h]	0			0			0			0		
Bicycle Volume [bicycles/h]	0			0			0			0		

Intersection Settings

Cycle Length [s]	100
Lost time [s]	10.00

Phasing & Timing

Control Type	Protecte	Permiss	Permiss	Protecte	Permiss	Permiss	Permiss	Permiss	Permiss	Permiss	Permiss	Permiss
Signal group	5	2	0	1	6	0	0	8	0	0	4	0
Auxiliary Signal Groups												
Lead / Lag	Lead	-	-	Lead	-	-	-	-	-	-	-	-

Movement, Approach, & Intersection Results

V/C, Movement V/C Ratio	0.02	0.27	0.07	0.07	0.29	0.02	0.01	0.14	0.03	0.04	0.10	0.02
Intersection LOS	B											
Intersection V/C	0.624											

Intersection Level Of Service Report

Intersection 26: Vincent Avenue (NS) at Workman Avenue (EW)

Control Type:	Signalized	Delay (sec / veh):	-
Analysis Method:	ICU 1	Level Of Service:	B
Analysis Period:	15 minutes	Volume to Capacity (v/c):	0.696

Intersection Setup

Name	Vincent Avenue			Vincent Avenue			Workman Avenue			Workman Avenue		
Approach	Northbound			Southbound			Eastbound			Westbound		
Lane Configuration												
Turning Movement	Left	Thru	Right	Left	Thru	Right	Left	Thru	Right	Left	Thru	Right
Lane Width [ft]	12.00	12.00	12.00	12.00	12.00	12.00	12.00	12.00	12.00	12.00	12.00	12.00
No. of Lanes in Pocket	1	0	0	1	0	0	0	0	0	0	0	0
Pocket Length [ft]	120.00	100.00	100.00	180.00	100.00	100.00	100.00	100.00	100.00	100.00	100.00	100.00
Speed [mph]	35.00			40.00			35.00			35.00		
Grade [%]	0.00			0.00			0.00			0.00		
Crosswalk	Yes			Yes			Yes			Yes		

Volumes

Name	Vincent Avenue			Vincent Avenue			Workman Avenue			Workman Avenue		
Base Volume Input [veh/h]	91	947	198	81	856	24	17	257	64	108	143	47
Base Volume Adjustment Factor	1.0000	1.0000	1.0000	1.0000	1.0000	1.0000	1.0000	1.0000	1.0000	1.0000	1.0000	1.0000
Heavy Vehicles Percentage [%]	2.00	2.00	2.00	2.00	2.00	2.00	2.00	2.00	2.00	2.00	2.00	2.00
Growth Rate	1.01	1.01	1.01	1.01	1.01	1.01	1.01	1.01	1.01	1.01	1.01	1.01
In-Process Volume [veh/h]	0	0	0	0	0	0	0	0	0	0	0	0
Site-Generated Trips [veh/h]	0	14	1	0	65	0	0	0	0	0	0	0
Diverted Trips [veh/h]	0	0	0	0	0	0	0	0	0	0	0	0
Pass-by Trips [veh/h]	0	0	0	0	0	0	0	0	0	0	0	0
Existing Site Adjustment Volume [veh/h]	0	0	0	0	0	0	0	0	0	0	0	0
Other Volume [veh/h]	0	0	0	0	0	0	0	0	0	0	0	0
Total Hourly Volume [veh/h]	92	970	201	82	930	24	17	260	65	109	144	47
Peak Hour Factor	1.0000	1.0000	1.0000	1.0000	1.0000	1.0000	1.0000	1.0000	1.0000	1.0000	1.0000	1.0000
Other Adjustment Factor	1.0000	1.0000	1.0000	1.0000	1.0000	1.0000	1.0000	1.0000	1.0000	1.0000	1.0000	1.0000
Total 15-Minute Volume [veh/h]	23	243	50	21	233	6	4	65	16	27	36	12
Total Analysis Volume [veh/h]	92	970	201	82	930	24	17	260	65	109	144	47
Pedestrian Volume [ped/h]	0			0			0			0		
Bicycle Volume [bicycles/h]	0			0			0			0		

Intersection Settings

Cycle Length [s]	100
Lost time [s]	10.00

Phasing & Timing

Control Type	Protecte	Permiss	Permiss	Protecte	Permiss	Permiss	Permiss	Permiss	Permiss	Permiss	Permiss	Permiss
Signal group	5	2	0	1	6	0	0	8	0	0	4	0
Auxiliary Signal Groups												
Lead / Lag	Lead	-	-	Lead	-	-	-	-	-	-	-	-

Movement, Approach, & Intersection Results

V/C, Movement V/C Ratio	0.06	0.30	0.13	0.05	0.29	0.02	0.01	0.17	0.04	0.07	0.16	0.03
Intersection LOS	B											
Intersection V/C	0.696											

Intersection Level Of Service Report
Intersection 27: Vincent Avenue (NS) at I-10 WB Ramps (EW)

Control Type:	Signalized	Delay (sec / veh):	-
Analysis Method:	ICU 1	Level Of Service:	A
Analysis Period:	15 minutes	Volume to Capacity (v/c):	0.470

Intersection Setup

Name	Vincent Avenue		Vincent Avenue		I-10 WB Ramps	
Approach	Northbound		Southbound		Westbound	
Lane Configuration						
Turning Movement	Thru	Right	Left	Thru	Left	Right
Lane Width [ft]	12.00	12.00	12.00	12.00	12.00	12.00
No. of Lanes in Pocket	0	0	0	0	0	1
Pocket Length [ft]	100.00	100.00	100.00	100.00	100.00	220.00
Speed [mph]	35.00		35.00		35.00	
Grade [%]	0.00		0.00		0.00	
Crosswalk	No		No		Yes	

Volumes

Name	Vincent Avenue		Vincent Avenue		I-10 WB Ramps	
Base Volume Input [veh/h]	1060	0	0	1075	393	194
Base Volume Adjustment Factor	1.0000	1.0000	1.0000	1.0000	1.0000	1.0000
Heavy Vehicles Percentage [%]	2.00	2.00	2.00	2.00	2.00	2.00
Growth Rate	1.01	1.00	1.00	1.01	1.01	1.01
In-Process Volume [veh/h]	0	0	0	0	0	0
Site-Generated Trips [veh/h]	9	0	0	70	0	10
Diverted Trips [veh/h]	0	0	0	0	0	0
Pass-by Trips [veh/h]	0	0	0	0	0	0
Existing Site Adjustment Volume [veh/h]	0	0	0	0	0	0
Other Volume [veh/h]	0	0	0	0	0	0
Total Hourly Volume [veh/h]	1080	0	0	1156	397	206
Peak Hour Factor	1.0000	1.0000	1.0000	1.0000	1.0000	1.0000
Other Adjustment Factor	1.0000	1.0000	1.0000	1.0000	1.0000	1.0000
Total 15-Minute Volume [veh/h]	270	0	0	289	99	52
Total Analysis Volume [veh/h]	1080	0	0	1156	397	206
Pedestrian Volume [ped/h]	0		0		0	
Bicycle Volume [bicycles/h]	0		0		0	

Intersection Settings

Cycle Length [s]	100
Lost time [s]	10.00

Phasing & Timing

Control Type	Permissive	Permissive	Permissive	Permissive	Split	Split
Signal group	2	0	0	6	7	0
Auxiliary Signal Groups						
Lead / Lag	-	-	-	-	Lead	-

Movement, Approach, & Intersection Results

V/C, Movement V/C Ratio	0.23	0.00	0.00	0.24	0.12	0.13
Intersection LOS	A					
Intersection V/C	0.470					

Intersection Level Of Service Report
Intersection 28: Vincent Avenue (NS) at I-10 EB Ramps (EW)

Control Type:	Signalized	Delay (sec / veh):	-
Analysis Method:	ICU 1	Level Of Service:	A
Analysis Period:	15 minutes	Volume to Capacity (v/c):	0.546

Intersection Setup

Name	Vincent Avenue			Vincent Avenue			I-10 EB Ramps			I-10 EB Ramps		
Approach	Northbound			Southbound			Eastbound			Westbound		
Lane Configuration												
Turning Movement	Left	Thru	Right	Left	Thru	Right	Left	Thru	Right	Left	Thru	Right
Lane Width [ft]	12.00	12.00	12.00	12.00	12.00	12.00	12.00	12.00	12.00	12.00	12.00	12.00
No. of Lanes in Pocket	0	0	0	0	0	0	0	0	0	0	0	0
Pocket Length [ft]	100.00	100.00	100.00	100.00	100.00	100.00	100.00	100.00	100.00	100.00	100.00	100.00
Speed [mph]		35.00			35.00			35.00			35.00	
Grade [%]		0.00			0.00			0.00			0.00	
Crosswalk		No			No			Yes			Yes	

Volumes

Name	Vincent Avenue			Vincent Avenue			I-10 EB Ramps			I-10 EB Ramps		
Base Volume Input [veh/h]	0	903	711	0	1381	340	160	0	129	0	0	0
Base Volume Adjustment Factor	1.0000	1.0000	1.0000	1.0000	1.0000	1.0000	1.0000	1.0000	1.0000	1.0000	1.0000	1.0000
Heavy Vehicles Percentage [%]	2.00	2.00	2.00	2.00	2.00	2.00	2.00	2.00	2.00	2.00	2.00	2.00
Growth Rate	1.00	1.01	1.01	1.00	1.01	1.01	1.01	1.00	1.01	1.00	1.00	1.00
In-Process Volume [veh/h]	0	0	0	0	0	0	0	0	0	0	0	0
Site-Generated Trips [veh/h]	0	1	1	7	4	39	8	0	0	0	0	0
Diverted Trips [veh/h]	0	0	0	0	0	0	0	0	0	0	0	0
Pass-by Trips [veh/h]	0	0	0	0	0	0	0	0	0	0	0	0
Existing Site Adjustment Volume [veh/h]	0	0	0	0	0	0	0	0	0	0	0	0
Other Volume [veh/h]	0	0	0	0	0	0	0	0	0	0	0	0
Total Hourly Volume [veh/h]	0	913	719	7	1399	382	170	0	130	0	0	0
Peak Hour Factor	1.0000	1.0000	1.0000	1.0000	1.0000	1.0000	1.0000	1.0000	1.0000	1.0000	1.0000	1.0000
Other Adjustment Factor	1.0000	1.0000	1.0000	1.0000	1.0000	1.0000	1.0000	1.0000	1.0000	1.0000	1.0000	1.0000
Total 15-Minute Volume [veh/h]	0	228	180	2	350	96	43	0	33	0	0	0
Total Analysis Volume [veh/h]	0	913	719	7	1399	382	170	0	130	0	0	0
Pedestrian Volume [ped/h]		0			0			0			0	
Bicycle Volume [bicycles/h]		0			0			0			0	

Intersection Settings

Cycle Length [s]	100
Lost time [s]	10.00

Phasing & Timing

Control Type	Permiss	Permiss	Permiss	Permiss	Permiss	Permiss	Split	Permiss	Split	Permiss	Permiss	Permiss
Signal group	0	2	0	0	6	0	3	0	0	0	0	0
Auxiliary Signal Groups												
Lead / Lag	-	-	-	-	-	-	Lead	-	-	-	-	-

Movement, Approach, & Intersection Results

V/C, Movement V/C Ratio	0.00	0.34	0.34	0.00	0.29	0.24	0.11	0.00	0.04	0.00	0.00	0.00
Intersection LOS	A											
Intersection V/C	0.546											

Intersection Level Of Service Report

Intersection 29: Vernon Ave/Lark Ellen Ave (NS) at Gladstone Street (EW)

Control Type:	Signalized	Delay (sec / veh):	-
Analysis Method:	ICU 1	Level Of Service:	C
Analysis Period:	15 minutes	Volume to Capacity (v/c):	0.762

Intersection Setup

Name	Lark Ellen Avenue			Vernon Avenue			Gladstone Street			Gladstone Street		
Approach	Northbound			Southbound			Eastbound			Westbound		
Lane Configuration												
Turning Movement	Left	Thru	Right	Left	Thru	Right	Left	Thru	Right	Left	Thru	Right
Lane Width [ft]	12.00	12.00	12.00	12.00	12.00	12.00	12.00	12.00	12.00	12.00	12.00	12.00
No. of Lanes in Pocket	1	0	0	1	0	0	1	0	0	1	0	0
Pocket Length [ft]	60.00	100.00	100.00	60.00	100.00	100.00	70.00	100.00	100.00	60.00	100.00	100.00
Speed [mph]	35.00			35.00			45.00			45.00		
Grade [%]	0.00			0.00			0.00			0.00		
Crosswalk	Yes			Yes			Yes			Yes		

Volumes

Name	Lark Ellen Avenue			Vernon Avenue			Gladstone Street			Gladstone Street		
Base Volume Input [veh/h]	41	335	161	42	424	62	167	992	74	92	238	29
Base Volume Adjustment Factor	1.0000	1.0000	1.0000	1.0000	1.0000	1.0000	1.0000	1.0000	1.0000	1.0000	1.0000	1.0000
Heavy Vehicles Percentage [%]	2.00	2.00	2.00	2.00	2.00	2.00	2.00	2.00	2.00	2.00	2.00	2.00
Growth Rate	1.01	1.01	1.01	1.01	1.01	1.01	1.01	1.01	1.01	1.01	1.01	1.01
In-Process Volume [veh/h]	0	0	0	0	0	0	0	0	0	0	0	0
Site-Generated Trips [veh/h]	0	0	0	0	0	4	26	95	1	0	21	0
Diverted Trips [veh/h]	0	0	0	0	0	0	0	0	0	0	0	0
Pass-by Trips [veh/h]	0	0	0	0	0	0	0	0	0	0	0	0
Existing Site Adjustment Volume [veh/h]	0	0	0	0	0	0	0	0	0	0	0	0
Other Volume [veh/h]	0	0	0	0	0	0	0	0	0	0	0	0
Total Hourly Volume [veh/h]	41	338	163	42	428	67	195	1097	76	93	261	29
Peak Hour Factor	1.0000	1.0000	1.0000	1.0000	1.0000	1.0000	1.0000	1.0000	1.0000	1.0000	1.0000	1.0000
Other Adjustment Factor	1.0000	1.0000	1.0000	1.0000	1.0000	1.0000	1.0000	1.0000	1.0000	1.0000	1.0000	1.0000
Total 15-Minute Volume [veh/h]	10	85	41	11	107	17	49	274	19	23	65	7
Total Analysis Volume [veh/h]	41	338	163	42	428	67	195	1097	76	93	261	29
Pedestrian Volume [ped/h]	0			0			0			0		
Bicycle Volume [bicycles/h]	0			0			0			0		

Intersection Settings

Cycle Length [s]	100
Lost time [s]	10.00

Phasing & Timing

Control Type	Permiss	Permiss	Permiss	Permiss	Permiss	Permiss	Permiss	Permiss	Permiss	Permiss	Permiss	Permiss
Signal group	0	2	0	0	6	0	0	8	0	0	4	0
Auxiliary Signal Groups												
Lead / Lag	-	-	-	-	-	-	-	-	-	-	-	-

Movement, Approach, & Intersection Results

V/C, Movement V/C Ratio	0.03	0.21	0.10	0.03	0.15	0.15	0.12	0.37	0.37	0.06	0.09	0.09
Intersection LOS	C											
Intersection V/C	0.762											

Intersection Level Of Service Report
Intersection 30: Azusa Avenue (NS) at I-210 EB Ramps (EW)

Control Type:	Signalized	Delay (sec / veh):	-
Analysis Method:	ICU 1	Level Of Service:	C
Analysis Period:	15 minutes	Volume to Capacity (v/c):	0.704

Intersection Setup

Name	Azusa Avenue		Azusa Avenue		I-210 EB Ramps	
Approach	Northbound		Southbound		Eastbound	
Lane Configuration						
Turning Movement	Left	Thru	Thru	Right	Left	Right
Lane Width [ft]	12.00	12.00	12.00	12.00	12.00	12.00
No. of Lanes in Pocket	0	0	0	0	0	0
Pocket Length [ft]	100.00	100.00	100.00	100.00	100.00	100.00
Speed [mph]	35.00		35.00		35.00	
Grade [%]	0.00		0.00		0.00	
Crosswalk	No		No		Yes	

Volumes

Name	Azusa Avenue		Azusa Avenue		I-210 EB Ramps	
Base Volume Input [veh/h]	0	1131	795	0	131	321
Base Volume Adjustment Factor	1.0000	1.0000	1.0000	1.0000	1.0000	1.0000
Heavy Vehicles Percentage [%]	2.00	2.00	2.00	2.00	2.00	2.00
Growth Rate	1.00	1.01	1.01	1.00	1.01	1.01
In-Process Volume [veh/h]	0	0	0	0	0	0
Site-Generated Trips [veh/h]	0	118	47	0	19	12
Diverted Trips [veh/h]	0	0	0	0	0	0
Pass-by Trips [veh/h]	0	0	0	0	0	0
Existing Site Adjustment Volume [veh/h]	0	0	0	0	0	0
Other Volume [veh/h]	0	0	0	0	0	0
Total Hourly Volume [veh/h]	0	1260	850	0	151	336
Peak Hour Factor	1.0000	1.0000	1.0000	1.0000	1.0000	1.0000
Other Adjustment Factor	1.0000	1.0000	1.0000	1.0000	1.0000	1.0000
Total 15-Minute Volume [veh/h]	0	315	213	0	38	84
Total Analysis Volume [veh/h]	0	1260	850	0	151	336
Pedestrian Volume [ped/h]	0		0		0	
Bicycle Volume [bicycles/h]	0		0		0	

Intersection Settings

Cycle Length [s]	100
Lost time [s]	10.00

Phasing & Timing

Control Type	Permissive	Permissive	Permissive	Permissive	Split	Split
Signal group	0	2	6	0	3	0
Auxiliary Signal Groups						
Lead / Lag	-	-	-	-	Lead	-

Movement, Approach, & Intersection Results

V/C, Movement V/C Ratio	0.00	0.39	0.27	0.00	0.05	0.21
Intersection LOS	C					
Intersection V/C	0.704					

Intersection Level Of Service Report

Intersection 31: Azusa Avenue (NS) at Paramount Street (EW)

Control Type:	Signalized	Delay (sec / veh):	-
Analysis Method:	ICU 1	Level Of Service:	B
Analysis Period:	15 minutes	Volume to Capacity (v/c):	0.670

Intersection Setup

Name	Azusa Avenue			Azusa Avenue			Paramount Street			Paramount Street		
Approach	Northbound			Southbound			Eastbound			Westbound		
Lane Configuration												
Turning Movement	Left	Thru	Right	Left	Thru	Right	Left	Thru	Right	Left	Thru	Right
Lane Width [ft]	12.00	12.00	12.00	12.00	12.00	12.00	12.00	12.00	12.00	12.00	12.00	12.00
No. of Lanes in Pocket	1	0	0	1	0	0	0	0	0	0	0	0
Pocket Length [ft]	200.00	100.00	100.00	110.00	100.00	100.00	100.00	100.00	100.00	100.00	100.00	100.00
Speed [mph]	35.00			35.00			25.00			15.00		
Grade [%]	0.00			0.00			0.00			0.00		
Crosswalk	No			Yes			Yes			Yes		

Volumes

Name	Azusa Avenue			Azusa Avenue			Paramount Street			Paramount Street		
Base Volume Input [veh/h]	91	923	4	27	966	51	170	1	87	17	7	36
Base Volume Adjustment Factor	1.0000	1.0000	1.0000	1.0000	1.0000	1.0000	1.0000	1.0000	1.0000	1.0000	1.0000	1.0000
Heavy Vehicles Percentage [%]	2.00	2.00	2.00	2.00	2.00	2.00	2.00	2.00	2.00	2.00	2.00	2.00
Growth Rate	1.01	1.01	1.01	1.01	1.01	1.01	1.01	1.01	1.01	1.01	1.01	1.01
In-Process Volume [veh/h]	0	0	0	0	0	0	0	0	0	0	0	0
Site-Generated Trips [veh/h]	6	98	0	0	45	0	26	0	0	0	0	0
Diverted Trips [veh/h]	0	0	0	0	0	0	0	0	0	0	0	0
Pass-by Trips [veh/h]	0	0	0	0	0	0	0	0	0	0	0	0
Existing Site Adjustment Volume [veh/h]	0	0	0	0	0	0	0	0	0	0	0	0
Other Volume [veh/h]	0	0	0	0	0	0	0	0	0	0	0	0
Total Hourly Volume [veh/h]	98	1030	4	27	1021	52	198	1	88	17	7	36
Peak Hour Factor	1.0000	1.0000	1.0000	1.0000	1.0000	1.0000	1.0000	1.0000	1.0000	1.0000	1.0000	1.0000
Other Adjustment Factor	1.0000	1.0000	1.0000	1.0000	1.0000	1.0000	1.0000	1.0000	1.0000	1.0000	1.0000	1.0000
Total 15-Minute Volume [veh/h]	25	258	1	7	255	13	50	0	22	4	2	9
Total Analysis Volume [veh/h]	98	1030	4	27	1021	52	198	1	88	17	7	36
Pedestrian Volume [ped/h]	0			0			0			0		
Bicycle Volume [bicycles/h]	0			0			0			0		

Intersection Settings

Cycle Length [s]	100
Lost time [s]	10.00

Phasing & Timing

Control Type	Permiss	Permiss	Permiss	Permiss	Permiss	Permiss	Permiss	Permiss	Permiss	Permiss	Permiss	Permiss
Signal group	0	2	0	0	6	0	0	8	0	0	4	0
Auxiliary Signal Groups												
Lead / Lag	-	-	-	-	-	-	-	-	-	-	-	-

Movement, Approach, & Intersection Results

V/C, Movement V/C Ratio	0.06	0.32	0.00	0.02	0.32	0.03	0.12	0.18	0.18	0.01	0.04	0.04
Intersection LOS	B											
Intersection V/C	0.670											

Intersection Level Of Service Report
Intersection 32: Azusa Avenue (NS) at Gladstone Street (EW)

Control Type:	Signalized	Delay (sec / veh):	-
Analysis Method:	ICU 1	Level Of Service:	C
Analysis Period:	15 minutes	Volume to Capacity (v/c):	0.755

Intersection Setup

Name	Azusa Avenue			Azusa Avenue			Gladstone Street			Gladstone Street		
Approach	Northbound			Southbound			Eastbound			Westbound		
Lane Configuration												
Turning Movement	Left	Thru	Right	Left	Thru	Right	Left	Thru	Right	Left	Thru	Right
Lane Width [ft]	12.00	12.00	12.00	12.00	12.00	12.00	12.00	12.00	12.00	12.00	12.00	12.00
No. of Lanes in Pocket	1	0	1	2	0	0	1	0	0	1	0	0
Pocket Length [ft]	190.00	100.00	190.00	190.00	100.00	100.00	150.00	100.00	100.00	150.00	100.00	100.00
Speed [mph]	35.00			35.00			40.00			40.00		
Grade [%]	0.00			0.00			0.00			0.00		
Crosswalk	Yes			Yes			Yes			Yes		

Volumes

Name	Azusa Avenue			Azusa Avenue			Gladstone Street			Gladstone Street		
Base Volume Input [veh/h]	79	668	150	214	716	57	212	762	79	122	287	73
Base Volume Adjustment Factor	1.0000	1.0000	1.0000	1.0000	1.0000	1.0000	1.0000	1.0000	1.0000	1.0000	1.0000	1.0000
Heavy Vehicles Percentage [%]	2.00	2.00	2.00	2.00	2.00	2.00	2.00	2.00	2.00	2.00	2.00	2.00
Growth Rate	1.01	1.01	1.01	1.01	1.01	1.01	1.01	1.01	1.01	1.01	1.01	1.01
In-Process Volume [veh/h]	0	0	0	0	0	0	0	0	0	0	0	0
Site-Generated Trips [veh/h]	0	19	1	14	16	15	69	23	3	1	6	16
Diverted Trips [veh/h]	0	0	0	0	0	0	0	0	0	0	0	0
Pass-by Trips [veh/h]	0	0	0	0	0	0	0	0	0	0	0	0
Existing Site Adjustment Volume [veh/h]	0	0	0	0	0	0	0	0	0	0	0	0
Other Volume [veh/h]	0	0	0	0	0	0	0	0	0	0	0	0
Total Hourly Volume [veh/h]	80	694	153	230	739	73	283	793	83	124	296	90
Peak Hour Factor	1.0000	1.0000	1.0000	1.0000	1.0000	1.0000	1.0000	1.0000	1.0000	1.0000	1.0000	1.0000
Other Adjustment Factor	1.0000	1.0000	1.0000	1.0000	1.0000	1.0000	1.0000	1.0000	1.0000	1.0000	1.0000	1.0000
Total 15-Minute Volume [veh/h]	20	174	38	58	185	18	71	198	21	31	74	23
Total Analysis Volume [veh/h]	80	694	153	230	739	73	283	793	83	124	296	90
Pedestrian Volume [ped/h]	0			0			0			0		
Bicycle Volume [bicycles/h]	0			0			0			0		

Intersection Settings

Cycle Length [s]	100
Lost time [s]	10.00

Phasing & Timing

Control Type	Protecte	Permiss	Overlap	Protecte	Permiss	Permiss	Protecte	Permiss	Permiss	Protecte	Permiss	Permiss
Signal group	5	2	2	1	6	0	3	8	0	7	4	0
Auxiliary Signal Groups			2,7									
Lead / Lag	Lead	-	-	Lead	-	-	Lead	-	-	Lead	-	-

Movement, Approach, & Intersection Results

V/C, Movement V/C Ratio	0.05	0.22	0.02	0.07	0.25	0.25	0.18	0.27	0.27	0.08	0.12	0.12
Intersection LOS	C											
Intersection V/C	0.755											

Intersection Level Of Service Report

Intersection 33: San Gabriel Ave/Azusa Ave (NS) at 1st St (EW)

Control Type:	Signalized	Delay (sec / veh):	-
Analysis Method:	ICU 1	Level Of Service:	B
Analysis Period:	15 minutes	Volume to Capacity (v/c):	0.694

Intersection Setup

Name												
Approach	Northbound			Southbound			Eastbound			Westbound		
Lane Configuration												
Turning Movement	Left	Thru	Right	Left	Thru	Right	Left	Thru	Right	Left	Thru	Right
Lane Width [ft]	12.00	12.00	12.00	12.00	12.00	12.00	12.00	12.00	12.00	12.00	12.00	12.00
No. of Lanes in Pocket	0	0	0	0	0	0	0	0	0	0	0	0
Pocket Length [ft]	100.00	100.00	100.00	100.00	100.00	100.00	100.00	100.00	100.00	100.00	100.00	100.00
Speed [mph]	35.00			35.00			35.00			35.00		
Grade [%]	0.00			0.00			0.00			0.00		
Crosswalk	No			Yes			Yes			Yes		

Volumes

Name												
Base Volume Input [veh/h]	78	505	330	117	837	20	72	175	85	288	164	148
Base Volume Adjustment Factor	1.0000	1.0000	1.0000	1.0000	1.0000	1.0000	1.0000	1.0000	1.0000	1.0000	1.0000	1.0000
Heavy Vehicles Percentage [%]	2.00	2.00	2.00	2.00	2.00	2.00	2.00	2.00	2.00	2.00	2.00	2.00
Growth Rate	1.06	1.06	1.06	1.06	1.06	1.06	1.06	1.06	1.06	1.06	1.06	1.06
In-Process Volume [veh/h]	0	0	0	0	0	0	0	0	0	0	0	0
Site-Generated Trips [veh/h]	0	47	13	15	53	0	0	0	0	23	0	38
Diverted Trips [veh/h]	0	0	0	0	0	0	0	0	0	0	0	0
Pass-by Trips [veh/h]	0	0	0	0	0	0	0	0	0	0	0	0
Existing Site Adjustment Volume [veh/h]	0	0	0	0	0	0	0	0	0	0	0	0
Other Volume [veh/h]	0	0	0	0	0	0	0	0	0	0	0	0
Total Hourly Volume [veh/h]	83	582	363	139	940	21	76	186	90	328	174	195
Peak Hour Factor	0.9690	0.9690	0.9690	0.9690	0.9690	0.9690	0.9690	0.9690	0.9690	0.9690	0.9690	0.9690
Other Adjustment Factor	1.0000	1.0000	1.0000	1.0000	1.0000	1.0000	1.0000	1.0000	1.0000	1.0000	1.0000	1.0000
Total 15-Minute Volume [veh/h]	21	150	94	36	243	5	20	48	23	85	45	50
Total Analysis Volume [veh/h]	86	601	375	143	970	22	78	192	93	338	180	201
Pedestrian Volume [ped/h]	0			0			0			0		
Bicycle Volume [bicycles/h]	0			0			0			0		

Intersection Settings

Cycle Length [s]	100
Lost time [s]	10.00

Phasing & Timing

Control Type	Protecte	Permiss	Permiss	Protecte	Permiss	Permiss	Protecte	Permiss	Permiss	Protecte	Permiss	Permiss
Signal group	5	2	0	1	6	0	3	8	0	7	4	0
Auxiliary Signal Groups												
Lead / Lag	Lead	-	-	Lead	-	-	Lead	-	-	Lead	-	-

Movement, Approach, & Intersection Results

V/C, Movement V/C Ratio	0.05	0.19	0.23	0.09	0.30	0.01	0.05	0.12	0.06	0.11	0.12	0.12
Intersection LOS	B											
Intersection V/C	0.694											

Intersection Level Of Service Report

Intersection 34: Alameda Ave/I-210 WB Ramps (NS) at 1st St (EW)

Control Type:	Signalized	Delay (sec / veh):	-
Analysis Method:	ICU 1	Level Of Service:	C
Analysis Period:	15 minutes	Volume to Capacity (v/c):	0.740

Intersection Setup

Name												
Approach	Northbound			Southbound			Eastbound			Westbound		
Lane Configuration												
Turning Movement	Left	Thru	Right	Left	Thru	Right	Left	Thru	Right	Left	Thru	Right
Lane Width [ft]	12.00	12.00	12.00	12.00	12.00	12.00	12.00	12.00	12.00	12.00	12.00	12.00
No. of Lanes in Pocket	1	0	0	1	0	1	1	0	1	1	0	1
Pocket Length [ft]	325.00	100.00	100.00	50.00	100.00	150.00	55.00	100.00	100.00	100.00	100.00	110.00
Speed [mph]	35.00			35.00			35.00			35.00		
Grade [%]	0.00			0.00			0.00			0.00		
Crosswalk	Yes			Yes			Yes			Yes		

Volumes

Name												
Base Volume Input [veh/h]	366	87	94	46	24	38	20	604	207	177	305	43
Base Volume Adjustment Factor	1.0000	1.0000	1.0000	1.0000	1.0000	1.0000	1.0000	1.0000	1.0000	1.0000	1.0000	1.0000
Heavy Vehicles Percentage [%]	2.00	2.00	2.00	2.00	2.00	2.00	2.00	2.00	2.00	2.00	2.00	2.00
Growth Rate	1.02	1.02	1.02	1.02	1.02	1.02	1.02	1.02	1.02	1.02	1.02	1.02
In-Process Volume [veh/h]	0	0	0	0	0	0	0	0	0	0	0	0
Site-Generated Trips [veh/h]	61	0	0	0	0	0	0	0	28	0	0	0
Diverted Trips [veh/h]	0	0	0	0	0	0	0	0	0	0	0	0
Pass-by Trips [veh/h]	0	0	0	0	0	0	0	0	0	0	0	0
Existing Site Adjustment Volume [veh/h]	0	0	0	0	0	0	0	0	0	0	0	0
Other Volume [veh/h]	0	0	0	0	0	0	0	0	0	0	0	0
Total Hourly Volume [veh/h]	434	89	96	47	24	39	20	616	239	181	311	44
Peak Hour Factor	0.9400	0.9400	0.9400	0.9400	0.9400	0.9400	0.9400	0.9400	0.9400	0.9400	0.9400	0.9400
Other Adjustment Factor	1.0000	1.0000	1.0000	1.0000	1.0000	1.0000	1.0000	1.0000	1.0000	1.0000	1.0000	1.0000
Total 15-Minute Volume [veh/h]	115	24	26	13	6	10	5	164	64	48	83	12
Total Analysis Volume [veh/h]	462	95	102	50	26	41	21	655	254	193	331	47
Pedestrian Volume [ped/h]	0			0			0			0		
Bicycle Volume [bicycles/h]	0			0			0			0		

Intersection Settings

Cycle Length [s]	100
Lost time [s]	10.00

Phasing & Timing

Control Type	Permiss	Permiss	Permiss	Permiss	Permiss	Permiss	Permiss	Permiss	Permiss	Permiss	Permiss	Permiss
Signal group	0	2	0	0	6	0	0	8	0	0	4	0
Auxiliary Signal Groups												
Lead / Lag	-	-	-	-	-	-	-	-	-	-	-	-

Movement, Approach, & Intersection Results

V/C, Movement V/C Ratio	0.29	0.12	0.12	0.03	0.02	0.03	0.01	0.20	0.16	0.12	0.21	0.03
Intersection LOS	C											
Intersection V/C	0.740											

FUTURE BASELINE PLUS CUMULATIVE PROJECTS WITH PROJECT – WITH IMPROVEMENTS

Vincent Avenue Industrial Building

Vistro File: G:\...\AMC.vistro

Scenario 6 Future Baseline Plus Cumulative Projects With Project With Improvements

Report File: G:\...\FBCP AM IMP.pdf

5/6/2020

Intersection Analysis Summary

ID	Intersection Name	Control Type	Method	Worst Mvmt	V/C	Delay (s/veh)	LOS
1	I-605 SB On Ramp (NS) at Live Oak Avenue (EW)	Signalized	ICU 1	WB Thru	0.635	-	B
2	I-605 NB Ramps (NS) at Live Oak Avenue (EW)	Signalized	ICU 1	WB Thru	0.969	-	E
7	Arrow Highway (NS) at Live Oak Ave/Arrow Hwy (EW)	Signalized	ICU 1	WB Thru	0.556	-	A
9	Santa Fe Dam/Azusa Canyon Road (NS) at Arrow Highway (EW)	Signalized	ICU 1	WB Thru	0.783	-	C
17	Vincent Avenue (NS) at Gladstone Street (EW)	Signalized	ICU 1	WB Thru	0.535	-	A
18	Vincent Avenue (NS) at Arrow Highway (EW)	Signalized	ICU 1	WB Thru	0.838	-	D
34	Alameda Ave/I-210 WB Ramps NS) at 1st St (EW)	Signalized	ICU 1	WB Thru	0.803	-	D

V/C, Delay, LOS: For two-way stop, these values are taken from the movement with the worst (highest) delay value. For all other control types, they are taken for the whole intersection.

Intersection Level Of Service Report

Intersection 1: I-605 SB On Ramp (NS) at Live Oak Avenue (EW)

Control Type:	Signalized	Delay (sec / veh):	-
Analysis Method:	ICU 1	Level Of Service:	B
Analysis Period:	15 minutes	Volume to Capacity (v/c):	0.635

Intersection Setup

Name	I-605 SB On Ramps				Live Oak Avenue	
Approach	Northbound		Eastbound		Westbound	
Lane Configuration						
Turning Movement	Left	Right	Thru	Right	Left	Thru
Lane Width [ft]	12.00	12.00	12.00	12.00	12.00	12.00
No. of Lanes in Pocket	0	0	0	0	1	0
Pocket Length [ft]	100.00	100.00	100.00	100.00	365.00	100.00
Speed [mph]	35.00		35.00		45.00	
Grade [%]	0.00		0.00		0.00	
Crosswalk	Yes		No		No	

Volumes

Name	I-605 SB On Ramps				Live Oak Avenue	
Base Volume Input [veh/h]	0	0	280	347	521	1094
Base Volume Adjustment Factor	1.0000	1.0000	1.0000	0.0000	1.0000	1.0000
Heavy Vehicles Percentage [%]	2.00	2.00	2.00	2.00	2.00	2.00
Growth Rate	1.00	1.00	1.01	1.01	1.01	1.01
In-Process Volume [veh/h]	0	0	0	0	0	0
Site-Generated Trips [veh/h]	0	0	92	138	196	608
Diverted Trips [veh/h]	0	0	0	0	0	0
Pass-by Trips [veh/h]	0	0	0	0	0	0
Existing Site Adjustment Volume [veh/h]	0	0	0	0	0	0
Other Volume [veh/h]	0	0	0	0	0	0
Total Hourly Volume [veh/h]	0	0	375	138	722	1713
Peak Hour Factor	1.0000	1.0000	1.0000	1.0000	1.0000	1.0000
Other Adjustment Factor	1.0000	1.0000	1.0000	0.0000	1.0000	1.0000
Total 15-Minute Volume [veh/h]	0	0	94	0	181	428
Total Analysis Volume [veh/h]	0	0	375	0	722	1713
Pedestrian Volume [ped/h]	0		0		0	
Bicycle Volume [bicycles/h]	0		0		0	

Intersection Settings

Cycle Length [s]	100
Lost time [s]	10.00

Phasing & Timing

Control Type	Permissive	Permissive	Permissive	Permissive	Protected	Permissive
Signal group	0	0	2	0	1	6
Auxiliary Signal Groups						
Lead / Lag	-	-	-	-	Lead	-

Movement, Approach, & Intersection Results

V/C, Movement V/C Ratio	0.00	0.00	0.12	0.00	0.23	0.54
Intersection LOS	B					
Intersection V/C	0.635					

Intersection Level Of Service Report

Intersection 2: I-605 NB Ramps (NS) at Live Oak Avenue (EW)

Control Type:	Signalized	Delay (sec / veh):	-
Analysis Method:	ICU 1	Level Of Service:	E
Analysis Period:	15 minutes	Volume to Capacity (v/c):	0.969

Intersection Setup

Name	I-605 NB Ramps			I-605 NB Ramps			Live Oak Avenue			Live Oak Avenue		
Approach	Northbound			Southbound			Eastbound			Westbound		
Lane Configuration												
Turning Movement	Left	Thru	Right	Left	Thru	Right	Left	Thru	Right	Left	Thru	Right
Lane Width [ft]	12.00	12.00	12.00	12.00	12.00	12.00	12.00	12.00	12.00	12.00	12.00	12.00
No. of Lanes in Pocket	0	0	0	0	0	0	0	0	0	0	0	0
Pocket Length [ft]	100.00	100.00	100.00	100.00	100.00	100.00	100.00	100.00	100.00	100.00	100.00	100.00
Speed [mph]	35.00			35.00			45.00			45.00		
Grade [%]	0.00			0.00			0.00			0.00		
Crosswalk	Yes			Yes			No			No		

Volumes

Name	I-605 NB Ramps			I-605 NB Ramps			Live Oak Avenue			Live Oak Avenue		
Base Volume Input [veh/h]	0	0	469	0	0	432	0	262	0	0	1205	0
Base Volume Adjustment Factor	1.0000	1.0000	1.0000	1.0000	1.0000	1.0000	1.0000	1.0000	1.0000	1.0000	1.0000	1.0000
Heavy Vehicles Percentage [%]	2.00	2.00	2.00	2.00	2.00	2.00	2.00	2.00	2.00	2.00	2.00	2.00
Growth Rate	1.00	1.00	1.01	1.00	1.00	1.01	1.00	1.01	1.00	1.00	1.01	1.00
In-Process Volume [veh/h]	0	0	0	0	0	0	0	0	0	0	0	0
Site-Generated Trips [veh/h]	0	0	363	0	0	484	0	92	0	0	320	0
Diverted Trips [veh/h]	0	0	0	0	0	0	0	0	0	0	0	0
Pass-by Trips [veh/h]	0	0	0	0	0	0	0	0	0	0	0	0
Existing Site Adjustment Volume [veh/h]	0	0	0	0	0	0	0	0	0	0	0	0
Other Volume [veh/h]	0	0	0	0	0	0	0	0	0	0	0	0
Total Hourly Volume [veh/h]	0	0	837	0	0	920	0	357	0	0	1537	0
Peak Hour Factor	1.0000	1.0000	1.0000	1.0000	1.0000	1.0000	1.0000	1.0000	1.0000	1.0000	1.0000	1.0000
Other Adjustment Factor	1.0000	1.0000	1.0000	1.0000	1.0000	1.0000	1.0000	1.0000	1.0000	1.0000	1.0000	1.0000
Total 15-Minute Volume [veh/h]	0	0	209	0	0	230	0	89	0	0	384	0
Total Analysis Volume [veh/h]	0	0	837	0	0	920	0	357	0	0	1537	0
Pedestrian Volume [ped/h]	0			0			0			0		
Bicycle Volume [bicycles/h]	0			0			0			0		

Intersection Settings

Cycle Length [s]	100
Lost time [s]	10.00

Phasing & Timing

Control Type	Permiss	Permiss	Permiss	Permiss	Permiss	Permiss	Permiss	Permiss	Permiss	Permiss	Permiss	Permiss
Signal group	0	0	2	0	0	6	0	8	0	0	4	0
Auxiliary Signal Groups												
Lead / Lag	-	-	-	-	-	-	-	-	-	-	-	-

Movement, Approach, & Intersection Results

V/C, Movement V/C Ratio	0.00	0.00	0.26	0.00	0.00	0.29	0.00	0.11	0.00	0.00	0.32	0.00
Intersection LOS	E											
Intersection V/C	0.969											

Intersection Level Of Service Report

Intersection 7: Arrow Highway (NS) at Live Oak Ave/Arrow Hwy (EW)

Control Type:	Signalized	Delay (sec / veh):	-
Analysis Method:	ICU 1	Level Of Service:	A
Analysis Period:	15 minutes	Volume to Capacity (v/c):	0.556

Intersection Setup

Name			Live Oak Avenue		Arrow Highway	
Approach	Southbound		Eastbound		Westbound	
Lane Configuration						
Turning Movement	Left	Right	Left	Thru	Thru	Right
Lane Width [ft]	12.00	12.00	12.00	12.00	12.00	12.00
No. of Lanes in Pocket	0	0	1	0	0	0
Pocket Length [ft]	100.00	100.00	160.00	100.00	100.00	100.00
Speed [mph]	35.00		45.00		45.00	
Grade [%]	0.00		0.00		0.00	
Crosswalk	No		Yes		No	

Volumes

Name			Live Oak Avenue		Arrow Highway	
Base Volume Input [veh/h]	296	59	113	634	1117	1772
Base Volume Adjustment Factor	1.0000	1.0000	1.0000	1.0000	1.0000	1.0000
Heavy Vehicles Percentage [%]	2.00	2.00	2.00	2.00	2.00	2.00
Growth Rate	1.01	1.01	1.01	1.01	1.01	1.00
In-Process Volume [veh/h]	0	0	0	0	0	0
Site-Generated Trips [veh/h]	38	35	20	226	99	41
Diverted Trips [veh/h]	0	0	0	0	0	0
Pass-by Trips [veh/h]	0	0	0	0	0	0
Existing Site Adjustment Volume [veh/h]	0	0	0	0	0	0
Other Volume [veh/h]	0	0	0	0	0	0
Total Hourly Volume [veh/h]	337	95	134	866	1227	1813
Peak Hour Factor	1.0000	1.0000	1.0000	1.0000	1.0000	1.0000
Other Adjustment Factor	1.0000	1.0000	1.0000	1.0000	1.0000	1.0000
Total 15-Minute Volume [veh/h]	84	24	34	217	307	453
Total Analysis Volume [veh/h]	337	95	134	866	1227	1813
Pedestrian Volume [ped/h]	0		0		0	
Bicycle Volume [bicycles/h]	0		0		0	

Intersection Settings

Cycle Length [s]	100
Lost time [s]	10.00

Phasing & Timing

Control Type	Permissive	Permissive	Permissive	Permissive	Permissive	Unsignalized
Signal group	1	0	0	8	4	0
Auxiliary Signal Groups						
Lead / Lag	Lead	-	-	-	-	-

Movement, Approach, & Intersection Results

V/C, Movement V/C Ratio	0.11	0.06	0.08	0.18	0.26	0.00
Intersection LOS	A					
Intersection V/C	0.556					

Intersection Level Of Service Report

Intersection 9: Santa Fe Dam/Azusa Canyon Road (NS) at Arrow Highway (EW)

Control Type:	Signalized	Delay (sec / veh):	-
Analysis Method:	ICU 1	Level Of Service:	C
Analysis Period:	15 minutes	Volume to Capacity (v/c):	0.783

Intersection Setup

Name	Azusa Canyon Road						Arrow Highway			Arrow Highway		
Approach	Northbound			Southbound			Eastbound			Westbound		
Lane Configuration												
Turning Movement	Left	Thru	Right	Left	Thru	Right	Left	Thru	Right	Left	Thru	Right
Lane Width [ft]	12.00	12.00	12.00	12.00	12.00	12.00	12.00	12.00	12.00	12.00	12.00	12.00
No. of Lanes in Pocket	1	0	0	0	0	0	1	0	0	1	0	0
Pocket Length [ft]	200.00	100.00	100.00	100.00	100.00	100.00	185.00	100.00	100.00	180.00	100.00	100.00
Speed [mph]	35.00			35.00			45.00			45.00		
Grade [%]	0.00			0.00			0.00			0.00		
Crosswalk	Yes			Yes			No			Yes		

Volumes

Name	Azusa Canyon Road						Arrow Highway			Arrow Highway		
Base Volume Input [veh/h]	837	14	145	11	3	12	19	624	122	67	1708	23
Base Volume Adjustment Factor	1.0000	1.0000	1.0000	1.0000	1.0000	1.0000	1.0000	1.0000	1.0000	1.0000	1.0000	1.0000
Heavy Vehicles Percentage [%]	2.00	2.00	2.00	2.00	2.00	2.00	2.00	2.00	2.00	2.00	2.00	2.00
Growth Rate	1.01	1.00	1.01	1.00	1.00	1.00	1.00	1.01	1.01	1.01	1.01	1.00
In-Process Volume [veh/h]	0	0	0	0	0	0	0	0	0	0	0	0
Site-Generated Trips [veh/h]	26	0	19	0	0	0	0	237	22	4	101	0
Diverted Trips [veh/h]	0	0	0	0	0	0	0	0	0	0	0	0
Pass-by Trips [veh/h]	0	0	0	0	0	0	0	0	0	0	0	0
Existing Site Adjustment Volume [veh/h]	0	0	0	0	0	0	0	0	0	0	0	0
Other Volume [veh/h]	0	0	0	0	0	0	0	0	0	0	0	0
Total Hourly Volume [veh/h]	871	14	165	11	3	12	19	867	145	72	1826	23
Peak Hour Factor	1.0000	1.0000	1.0000	1.0000	1.0000	1.0000	1.0000	1.0000	1.0000	1.0000	1.0000	1.0000
Other Adjustment Factor	1.0000	1.0000	1.0000	1.0000	1.0000	1.0000	1.0000	1.0000	1.0000	1.0000	1.0000	1.0000
Total 15-Minute Volume [veh/h]	218	4	41	3	1	3	5	217	36	18	457	6
Total Analysis Volume [veh/h]	871	14	165	11	3	12	19	867	145	72	1826	23
Pedestrian Volume [ped/h]	0			0			0			0		
Bicycle Volume [bicycles/h]	0			0			0			0		

Intersection Settings

Cycle Length [s]	100
Lost time [s]	10.00

Phasing & Timing

Control Type	Split	Split	Split	Split	Split	Split	Protecte	Permiss	Permiss	Protecte	Permiss	Permiss
Signal group	0	2	0	0	6	0	3	8	0	7	4	0
Auxiliary Signal Groups												
Lead / Lag	-	-	-	-	-	-	Lead	-	-	Lead	-	-

Movement, Approach, & Intersection Results

V/C, Movement V/C Ratio	0.27	0.28	0.10	0.01	0.01	0.01	0.01	0.21	0.21	0.05	0.39	0.39
Intersection LOS	C											
Intersection V/C	0.783											

Intersection Level Of Service Report

Intersection 17: Vincent Avenue (NS) at Gladstone Street (EW)

Control Type:	Signalized	Delay (sec / veh):	-
Analysis Method:	ICU 1	Level Of Service:	A
Analysis Period:	15 minutes	Volume to Capacity (v/c):	0.535

Intersection Setup

Name	Vincent Avenue			Vincent Avenue			Gladstone Street			Gladstone Street		
Approach	Northbound			Southbound			Eastbound			Westbound		
Lane Configuration												
Turning Movement	Left	Thru	Right	Left	Thru	Right	Left	Thru	Right	Left	Thru	Right
Lane Width [ft]	12.00	12.00	12.00	12.00	12.00	12.00	12.00	12.00	12.00	12.00	12.00	12.00
No. of Lanes in Pocket	1	0	0	0	0	0	2	0	0	1	0	0
Pocket Length [ft]	195.00	100.00	100.00	100.00	100.00	100.00	230.00	100.00	100.00	175.00	100.00	100.00
Speed [mph]	45.00			25.00			45.00			45.00		
Grade [%]	0.00			0.00			0.00			0.00		
Crosswalk	Yes			Yes			No			Yes		

Volumes

Name	Vincent Avenue			Vincent Avenue			Gladstone Street			Gladstone Street		
Base Volume Input [veh/h]	265	29	147	16	8	38	43	97	64	178	942	2
Base Volume Adjustment Factor	1.0000	1.0000	1.0000	1.0000	1.0000	1.0000	1.0000	1.0000	1.0000	1.0000	1.0000	1.0000
Heavy Vehicles Percentage [%]	2.00	2.00	2.00	2.00	2.00	2.00	2.00	2.00	2.00	2.00	2.00	2.00
Growth Rate	1.01	1.01	1.01	1.01	1.01	1.01	1.01	1.01	1.01	1.01	1.01	1.01
In-Process Volume [veh/h]	0	0	0	0	0	0	0	0	0	0	0	0
Site-Generated Trips [veh/h]	13	0	18	0	0	0	0	4	168	130	11	0
Diverted Trips [veh/h]	0	0	0	0	0	0	0	0	0	0	0	0
Pass-by Trips [veh/h]	0	0	0	0	0	0	0	0	0	0	0	0
Existing Site Adjustment Volume [veh/h]	0	0	0	0	0	0	0	0	0	0	0	0
Other Volume [veh/h]	0	0	0	0	0	0	0	0	0	0	0	0
Total Hourly Volume [veh/h]	281	29	166	16	8	38	43	102	233	310	962	2
Peak Hour Factor	1.0000	1.0000	1.0000	1.0000	1.0000	1.0000	1.0000	1.0000	1.0000	1.0000	1.0000	1.0000
Other Adjustment Factor	1.0000	1.0000	1.0000	1.0000	1.0000	1.0000	1.0000	1.0000	1.0000	1.0000	1.0000	1.0000
Total 15-Minute Volume [veh/h]	70	7	42	4	2	10	11	26	58	78	241	1
Total Analysis Volume [veh/h]	281	29	166	16	8	38	43	102	233	310	962	2
Pedestrian Volume [ped/h]	0			0			0			0		
Bicycle Volume [bicycles/h]	0			0			0			0		

Intersection Settings

Cycle Length [s]	100
Lost time [s]	10.00

Phasing & Timing

Control Type	Split	Split	Split	Split	Split	Split	Protecte	Permiss	Permiss	Protecte	Permiss	Permiss
Signal group	0	2	0	0	6	0	3	8	0	7	4	0
Auxiliary Signal Groups												
Lead / Lag	-	-	-	-	-	-	Lead	-	-	Lead	-	-

Movement, Approach, & Intersection Results

V/C, Movement V/C Ratio	0.09	0.10	0.10	0.01	0.03	0.03	0.01	0.10	0.10	0.19	0.30	0.30
Intersection LOS	A											
Intersection V/C	0.535											

Intersection Level Of Service Report

Intersection 18: Vincent Avenue (NS) at Arrow Highway (EW)

Control Type:	Signalized	Delay (sec / veh):	-
Analysis Method:	ICU 1	Level Of Service:	D
Analysis Period:	15 minutes	Volume to Capacity (v/c):	0.838

Intersection Setup

Name	Vincent Avenue			Vincent Avenue			Arrow Highway			Arrow Highway		
Approach	Northbound			Southbound			Eastbound			Westbound		
Lane Configuration												
Turning Movement	Left	Thru	Right	Left	Thru	Right	Left	Thru	Right	Left	Thru	Right
Lane Width [ft]	12.00	12.00	12.00	12.00	12.00	12.00	12.00	12.00	12.00	12.00	12.00	12.00
No. of Lanes in Pocket	1	0	0	1	0	0	1	0	0	1	0	0
Pocket Length [ft]	200.00	100.00	100.00	200.00	100.00	100.00	215.00	100.00	100.00	160.00	100.00	100.00
Speed [mph]	45.00			45.00			45.00			45.00		
Grade [%]	0.00			0.00			0.00			0.00		
Crosswalk	Yes			Yes			Yes			Yes		

Volumes

Name	Vincent Avenue			Vincent Avenue			Arrow Highway			Arrow Highway		
Base Volume Input [veh/h]	161	285	88	22	189	65	58	378	88	138	1150	89
Base Volume Adjustment Factor	1.0000	1.0000	1.0000	1.0000	1.0000	1.0000	1.0000	1.0000	1.0000	1.0000	1.0000	1.0000
Heavy Vehicles Percentage [%]	2.00	2.00	2.00	2.00	2.00	2.00	2.00	2.00	2.00	2.00	2.00	2.00
Growth Rate	1.01	1.01	1.01	1.01	1.01	1.01	1.01	1.01	1.01	1.01	1.01	1.01
In-Process Volume [veh/h]	0	0	0	0	0	0	0	0	0	0	0	0
Site-Generated Trips [veh/h]	55	38	5	2	171	103	32	23	152	27	49	4
Diverted Trips [veh/h]	0	0	0	0	0	0	0	0	0	0	0	0
Pass-by Trips [veh/h]	0	0	0	0	0	0	0	0	0	0	0	0
Existing Site Adjustment Volume [veh/h]	0	0	0	0	0	0	0	0	0	0	0	0
Other Volume [veh/h]	0	0	0	0	0	0	0	0	0	0	0	0
Total Hourly Volume [veh/h]	218	326	94	24	362	169	91	405	241	166	1211	94
Peak Hour Factor	1.0000	1.0000	1.0000	1.0000	1.0000	1.0000	1.0000	1.0000	1.0000	1.0000	1.0000	1.0000
Other Adjustment Factor	1.0000	1.0000	1.0000	1.0000	1.0000	1.0000	1.0000	1.0000	1.0000	1.0000	1.0000	1.0000
Total 15-Minute Volume [veh/h]	55	82	24	6	91	42	23	101	60	42	303	24
Total Analysis Volume [veh/h]	218	326	94	24	362	169	91	405	241	166	1211	94
Pedestrian Volume [ped/h]	0			0			0			0		
Bicycle Volume [bicycles/h]	0			0			0			0		

Intersection Settings

Cycle Length [s]	100
Lost time [s]	10.00

Phasing & Timing

Control Type	Permiss	Permiss	Permiss	Permiss	Permiss	Permiss	Permiss	Permiss	Permiss	Permiss	Permiss	Permiss
Signal group	0	2	0	0	6	0	0	8	0	0	4	0
Auxiliary Signal Groups												
Lead / Lag	-	-	-	-	-	-	-	-	-	-	-	-

Movement, Approach, & Intersection Results

V/C, Movement V/C Ratio	0.14	0.13	0.13	0.02	0.17	0.17	0.06	0.13	0.13	0.10	0.38	0.06
Intersection LOS	D											
Intersection V/C	0.838											

Intersection Level Of Service Report

Intersection 34: Alameda Ave/I-210 WB Ramps NS) at 1st St (EW)

Control Type:	Signalized	Delay (sec / veh):	-
Analysis Method:	ICU 1	Level Of Service:	D
Analysis Period:	15 minutes	Volume to Capacity (v/c):	0.803

Intersection Setup

Name											
Approach	Northbound			Southbound			Eastbound			Westbound		
Lane Configuration												
Turning Movement	Left	Thru	Right	Left	Thru	Right	Left	Thru	Right	Left	Thru	Right
Lane Width [ft]	12.00	12.00	12.00	12.00	12.00	12.00	12.00	12.00	12.00	12.00	12.00	12.00
No. of Lanes in Pocket	1	0	0	1	0	1	1	0	1	1	0	1
Pocket Length [ft]	325.00	100.00	100.00	50.00	100.00	150.00	55.00	100.00	100.00	100.00	100.00	110.00
Speed [mph]	35.00			35.00			35.00			35.00		
Grade [%]	0.00			0.00			0.00			0.00		
Crosswalk	Yes			Yes			Yes			Yes		

Volumes

Name												
Base Volume Input [veh/h]	111	14	7	41	112	64	8	239	388	580	465	44
Base Volume Adjustment Factor	1.0000	1.0000	1.0000	1.0000	1.0000	1.0000	1.0000	1.0000	1.0000	1.0000	1.0000	1.0000
Heavy Vehicles Percentage [%]	2.00	2.00	2.00	2.00	2.00	2.00	2.00	2.00	2.00	2.00	2.00	2.00
Growth Rate	1.02	1.02	1.02	1.02	1.02	1.02	1.02	1.02	1.02	1.02	1.02	1.02
In-Process Volume [veh/h]	0	0	0	0	0	0	0	0	0	0	0	0
Site-Generated Trips [veh/h]	107	0	0	0	0	0	0	0	27	0	0	0
Diverted Trips [veh/h]	0	0	0	0	0	0	0	0	0	0	0	0
Pass-by Trips [veh/h]	0	0	0	0	0	0	0	0	0	0	0	0
Existing Site Adjustment Volume [veh/h]	0	0	0	0	0	0	0	0	0	0	0	0
Other Volume [veh/h]	0	0	0	0	0	0	0	0	0	0	0	0
Total Hourly Volume [veh/h]	220	14	7	42	114	65	8	244	423	592	474	45
Peak Hour Factor	0.9350	0.9350	0.9350	0.9350	0.9350	0.9350	0.9350	0.9350	0.9350	0.9350	0.9350	0.9350
Other Adjustment Factor	1.0000	1.0000	1.0000	1.0000	1.0000	1.0000	1.0000	1.0000	1.0000	1.0000	1.0000	1.0000
Total 15-Minute Volume [veh/h]	59	4	2	11	30	17	2	65	113	158	127	12
Total Analysis Volume [veh/h]	235	15	7	45	122	70	9	261	452	633	507	48
Pedestrian Volume [ped/h]	0			0			0			0		
Bicycle Volume [bicycles/h]	0			0			0			0		

Intersection Settings

Cycle Length [s]	100
Lost time [s]	10.00

Phasing & Timing

Control Type	Permiss	Permiss	Permiss	Permiss	Permiss	Permiss	Protecte	Permiss	Permiss	Protecte	Permiss	Permiss
Signal group	0	2	0	0	6	0	3	8	0	7	4	0
Auxiliary Signal Groups												
Lead / Lag	-	-	-	-	-	-	Lead	-	-	Lead	-	-

Movement, Approach, & Intersection Results

V/C, Movement V/C Ratio	0.15	0.01	0.01	0.03	0.08	0.04	0.01	0.08	0.28	0.20	0.32	0.03
Intersection LOS	D											
Intersection V/C	0.803											

Vincent Avenue Industrial Building

Vistro File: G:\...\PMC.vistro

Scenario 6 Future Baseline Plus Cumulative Projects With Project With Improvements

Report File: G:\...\FBCP PM IMP.pdf

5/6/2020

Intersection Analysis Summary

ID	Intersection Name	Control Type	Method	Worst Mvmt	V/C	Delay (s/veh)	LOS
1	I-605 SB On Ramp (NS) at Live Oak Avenue (EW)	Signalized	ICU 1	EB Thru	0.755	-	C
2	I-605 NB Ramps (NS) at Live Oak Avenue (EW)	Signalized	ICU 1	EB Thru	0.944	-	E
7	Arrow Highway (NS) at Live Oak Ave/Arrow Hwy (EW)	Signalized	ICU 1	SB Left	0.811	-	D
9	Santa Fe Dam/Azusa Canyon Road (NS) at Arrow Highway (EW)	Signalized	ICU 1	EB Right	0.828	-	D
17	Vincent Avenue (NS) at Gladstone Street (EW)	Signalized	ICU 1	EB Thru	0.761	-	C
18	Vincent Avenue (NS) at Arrow Highway (EW)	Signalized	ICU 1	EB Right	0.805	-	D
34	Alameda Ave/I-210 WB Ramps (NS) at 1st St (EW)	Signalized	ICU 1	NB Left	0.679	-	B

V/C, Delay, LOS: For two-way stop, these values are taken from the movement with the worst (highest) delay value. For all other control types, they are taken for the whole intersection.

Intersection Level Of Service Report

Intersection 1: I-605 SB On Ramp (NS) at Live Oak Avenue (EW)

Control Type:	Signalized	Delay (sec / veh):	-
Analysis Method:	ICU 1	Level Of Service:	C
Analysis Period:	15 minutes	Volume to Capacity (v/c):	0.755

Intersection Setup

Name	I-605 SB On Ramps				Live Oak Avenue	
Approach	Northbound		Eastbound		Westbound	
Lane Configuration						
Turning Movement	Left	Right	Thru	Right	Left	Thru
Lane Width [ft]	12.00	12.00	12.00	12.00	12.00	12.00
No. of Lanes in Pocket	0	0	0	0	1	0
Pocket Length [ft]	100.00	100.00	100.00	100.00	365.00	100.00
Speed [mph]	35.00		35.00		45.00	
Grade [%]	0.00		0.00		0.00	
Crosswalk	Yes		No		No	

Volumes

Name	I-605 SB On Ramps				Live Oak Avenue	
Base Volume Input [veh/h]	0	0	1049	1114	557	884
Base Volume Adjustment Factor	1.0000	1.0000	1.0000	0.0000	1.0000	1.0000
Heavy Vehicles Percentage [%]	2.00	2.00	2.00	2.00	2.00	2.00
Growth Rate	1.00	1.00	1.01	1.01	1.01	1.01
In-Process Volume [veh/h]	0	0	0	0	0	0
Site-Generated Trips [veh/h]	0	0	133	504	342	282
Diverted Trips [veh/h]	0	0	0	0	0	0
Pass-by Trips [veh/h]	0	0	0	0	0	0
Existing Site Adjustment Volume [veh/h]	0	0	0	0	0	0
Other Volume [veh/h]	0	0	0	0	0	0
Total Hourly Volume [veh/h]	0	0	1192	504	905	1175
Peak Hour Factor	1.0000	1.0000	1.0000	1.0000	1.0000	1.0000
Other Adjustment Factor	1.0000	1.0000	1.0000	0.0000	1.0000	1.0000
Total 15-Minute Volume [veh/h]	0	0	298	0	226	294
Total Analysis Volume [veh/h]	0	0	1192	0	905	1175
Pedestrian Volume [ped/h]	0		0		0	
Bicycle Volume [bicycles/h]	0		0		0	

Intersection Settings

Cycle Length [s]	100
Lost time [s]	10.00

Phasing & Timing

Control Type	Permissive	Permissive	Permissive	Permissive	Protected	Permissive
Signal group	0	0	2	0	1	6
Auxiliary Signal Groups						
Lead / Lag	-	-	-	-	Lead	-

Movement, Approach, & Intersection Results

V/C, Movement V/C Ratio	0.00	0.00	0.37	0.00	0.28	0.37
Intersection LOS	C					
Intersection V/C	0.755					

Intersection Level Of Service Report

Intersection 2: I-605 NB Ramps (NS) at Live Oak Avenue (EW)

Control Type:	Signalized	Delay (sec / veh):	-
Analysis Method:	ICU 1	Level Of Service:	E
Analysis Period:	15 minutes	Volume to Capacity (v/c):	0.944

Intersection Setup

Name	I-605 NB Ramps			I-605 NB Ramps			Live Oak Avenue			Live Oak Avenue		
Approach	Northbound			Southbound			Eastbound			Westbound		
Lane Configuration												
Turning Movement	Left	Thru	Right	Left	Thru	Right	Left	Thru	Right	Left	Thru	Right
Lane Width [ft]	12.00	12.00	12.00	12.00	12.00	12.00	12.00	12.00	12.00	12.00	12.00	12.00
No. of Lanes in Pocket	0	0	0	0	0	0	0	0	0	0	0	0
Pocket Length [ft]	100.00	100.00	100.00	100.00	100.00	100.00	100.00	100.00	100.00	100.00	100.00	100.00
Speed [mph]	35.00			35.00			45.00			45.00		
Grade [%]	0.00			0.00			0.00			0.00		
Crosswalk	Yes			Yes			No			No		

Volumes

Name	I-605 NB Ramps			I-605 NB Ramps			Live Oak Avenue			Live Oak Avenue		
Base Volume Input [veh/h]	0	0	621	0	0	523	0	1012	0	0	944	0
Base Volume Adjustment Factor	1.0000	1.0000	1.0000	1.0000	1.0000	1.0000	1.0000	1.0000	1.0000	1.0000	1.0000	1.0000
Heavy Vehicles Percentage [%]	2.00	2.00	2.00	2.00	2.00	2.00	2.00	2.00	2.00	2.00	2.00	2.00
Growth Rate	1.00	1.00	1.01	1.00	1.00	1.01	1.00	1.01	1.00	1.00	1.01	1.00
In-Process Volume [veh/h]	0	0	0	0	0	0	0	0	0	0	0	0
Site-Generated Trips [veh/h]	0	0	222	0	0	170	0	133	0	0	454	0
Diverted Trips [veh/h]	0	0	0	0	0	0	0	0	0	0	0	0
Pass-by Trips [veh/h]	0	0	0	0	0	0	0	0	0	0	0	0
Existing Site Adjustment Volume [veh/h]	0	0	0	0	0	0	0	0	0	0	0	0
Other Volume [veh/h]	0	0	0	0	0	0	0	0	0	0	0	0
Total Hourly Volume [veh/h]	0	0	849	0	0	698	0	1155	0	0	1407	0
Peak Hour Factor	1.0000	1.0000	1.0000	1.0000	1.0000	1.0000	1.0000	1.0000	1.0000	1.0000	1.0000	1.0000
Other Adjustment Factor	1.0000	1.0000	1.0000	1.0000	1.0000	1.0000	1.0000	1.0000	1.0000	1.0000	1.0000	1.0000
Total 15-Minute Volume [veh/h]	0	0	212	0	0	175	0	289	0	0	352	0
Total Analysis Volume [veh/h]	0	0	849	0	0	698	0	1155	0	0	1407	0
Pedestrian Volume [ped/h]	0			0			0			0		
Bicycle Volume [bicycles/h]	0			0			0			0		

Intersection Settings

Cycle Length [s]	100
Lost time [s]	10.00

Phasing & Timing

Control Type	Permiss	Permiss	Permiss	Permiss	Permiss	Permiss	Permiss	Permiss	Permiss	Permiss	Permiss	Permiss
Signal group	0	0	2	0	0	6	0	8	0	0	4	0
Auxiliary Signal Groups												
Lead / Lag	-	-	-	-	-	-	-	-	-	-	-	-

Movement, Approach, & Intersection Results

V/C, Movement V/C Ratio	0.00	0.00	0.27	0.00	0.00	0.22	0.00	0.36	0.00	0.00	0.29	0.00
Intersection LOS	E											
Intersection V/C	0.944											

Intersection Level Of Service Report

Intersection 7: Arrow Highway (NS) at Live Oak Ave/Arrow Hwy (EW)

Control Type:	Signalized	Delay (sec / veh):	-
Analysis Method:	ICU 1	Level Of Service:	D
Analysis Period:	15 minutes	Volume to Capacity (v/c):	0.811

Intersection Setup

Name			Live Oak Avenue		Arrow Highway	
Approach	Southbound		Eastbound		Westbound	
Lane Configuration						
Turning Movement	Left	Right	Left	Thru	Thru	Right
Lane Width [ft]	12.00	12.00	12.00	12.00	12.00	12.00
No. of Lanes in Pocket	0	0	1	0	0	0
Pocket Length [ft]	100.00	100.00	160.00	100.00	100.00	100.00
Speed [mph]	35.00		45.00		45.00	
Grade [%]	0.00		0.00		0.00	
Crosswalk	No		Yes		No	

Volumes

Name			Live Oak Avenue		Arrow Highway	
Base Volume Input [veh/h]	1077	131	41	1326	1117	451
Base Volume Adjustment Factor	1.0000	1.0000	1.0000	1.0000	1.0000	1.0000
Heavy Vehicles Percentage [%]	2.00	2.00	2.00	2.00	2.00	2.00
Growth Rate	1.01	1.01	1.01	1.01	1.01	1.00
In-Process Volume [veh/h]	0	0	0	0	0	0
Site-Generated Trips [veh/h]	43	29	21	109	215	57
Diverted Trips [veh/h]	0	0	0	0	0	0
Pass-by Trips [veh/h]	0	0	0	0	0	0
Existing Site Adjustment Volume [veh/h]	0	0	0	0	0	0
Other Volume [veh/h]	0	0	0	0	0	0
Total Hourly Volume [veh/h]	1131	161	62	1448	1343	508
Peak Hour Factor	1.0000	1.0000	1.0000	1.0000	1.0000	1.0000
Other Adjustment Factor	1.0000	1.0000	1.0000	1.0000	1.0000	1.0000
Total 15-Minute Volume [veh/h]	283	40	16	362	336	127
Total Analysis Volume [veh/h]	1131	161	62	1448	1343	508
Pedestrian Volume [ped/h]	0		0		0	
Bicycle Volume [bicycles/h]	0		0		0	

Intersection Settings

Cycle Length [s]	100
Lost time [s]	10.00

Phasing & Timing

Control Type	Permissive	Permissive	Permissive	Permissive	Permissive	Unsignalized
Signal group	1	0	0	8	4	0
Auxiliary Signal Groups						
Lead / Lag	Lead	-	-	-	-	-

Movement, Approach, & Intersection Results

V/C, Movement V/C Ratio	0.35	0.10	0.04	0.30	0.28	0.00
Intersection LOS	D					
Intersection V/C	0.811					

Intersection Level Of Service Report

Intersection 9: Santa Fe Dam/Azusa Canyon Road (NS) at Arrow Highway (EW)

Control Type:	Signalized	Delay (sec / veh):	-
Analysis Method:	ICU 1	Level Of Service:	D
Analysis Period:	15 minutes	Volume to Capacity (v/c):	0.828

Intersection Setup

Name	Azusa Canyon Road						Arrow Highway			Arrow Highway		
Approach	Northbound			Southbound			Eastbound			Westbound		
Lane Configuration												
Turning Movement	Left	Thru	Right	Left	Thru	Right	Left	Thru	Right	Left	Thru	Right
Lane Width [ft]	12.00	12.00	12.00	12.00	12.00	12.00	12.00	12.00	12.00	12.00	12.00	12.00
No. of Lanes in Pocket	1	0	0	0	0	0	1	0	0	1	0	0
Pocket Length [ft]	200.00	100.00	100.00	100.00	100.00	100.00	185.00	100.00	100.00	180.00	100.00	100.00
Speed [mph]	35.00			35.00			45.00			45.00		
Grade [%]	0.00			0.00			0.00			0.00		
Crosswalk	Yes			Yes			No			Yes		

Volumes

Name	Azusa Canyon Road						Arrow Highway			Arrow Highway		
Base Volume Input [veh/h]	120	5	442	15	13	29	14	1265	59	158	967	16
Base Volume Adjustment Factor	1.0000	1.0000	1.0000	1.0000	1.0000	1.0000	1.0000	1.0000	1.0000	1.0000	1.0000	1.0000
Heavy Vehicles Percentage [%]	2.00	2.00	2.00	2.00	2.00	2.00	2.00	2.00	2.00	2.00	2.00	2.00
Growth Rate	1.01	1.00	1.01	1.00	1.00	1.00	1.00	1.01	1.01	1.01	1.01	1.00
In-Process Volume [veh/h]	0	0	0	0	0	0	0	0	0	0	0	0
Site-Generated Trips [veh/h]	28	0	5	0	0	0	0	111	30	18	236	0
Diverted Trips [veh/h]	0	0	0	0	0	0	0	0	0	0	0	0
Pass-by Trips [veh/h]	0	0	0	0	0	0	0	0	0	0	0	0
Existing Site Adjustment Volume [veh/h]	0	0	0	0	0	0	0	0	0	0	0	0
Other Volume [veh/h]	0	0	0	0	0	0	0	0	0	0	0	0
Total Hourly Volume [veh/h]	149	5	451	15	13	29	14	1389	90	178	1213	16
Peak Hour Factor	1.0000	1.0000	1.0000	1.0000	1.0000	1.0000	1.0000	1.0000	1.0000	1.0000	1.0000	1.0000
Other Adjustment Factor	1.0000	1.0000	1.0000	1.0000	1.0000	1.0000	1.0000	1.0000	1.0000	1.0000	1.0000	1.0000
Total 15-Minute Volume [veh/h]	37	1	113	4	3	7	4	347	23	45	303	4
Total Analysis Volume [veh/h]	149	5	451	15	13	29	14	1389	90	178	1213	16
Pedestrian Volume [ped/h]	0			0			0			0		
Bicycle Volume [bicycles/h]	0			0			0			0		

Intersection Settings

Cycle Length [s]	100
Lost time [s]	10.00

Phasing & Timing

Control Type	Split	Split	Split	Split	Split	Split	Protecte	Permiss	Permiss	Protecte	Permiss	Permiss
Signal group	0	2	0	0	6	0	3	8	0	7	4	0
Auxiliary Signal Groups												
Lead / Lag	-	-	-	-	-	-	Lead	-	-	Lead	-	-

Movement, Approach, & Intersection Results

V/C, Movement V/C Ratio	0.09	0.00	0.28	0.01	0.03	0.03	0.01	0.31	0.31	0.11	0.26	0.26
Intersection LOS	D											
Intersection V/C	0.828											

Intersection Level Of Service Report

Intersection 17: Vincent Avenue (NS) at Gladstone Street (EW)

Control Type:	Signalized	Delay (sec / veh):	-
Analysis Method:	ICU 1	Level Of Service:	C
Analysis Period:	15 minutes	Volume to Capacity (v/c):	0.761

Intersection Setup

Name	Vincent Avenue			Vincent Avenue			Gladstone Street			Gladstone Street		
Approach	Northbound			Southbound			Eastbound			Westbound		
Lane Configuration												
Turning Movement	Left	Thru	Right	Left	Thru	Right	Left	Thru	Right	Left	Thru	Right
Lane Width [ft]	12.00	12.00	12.00	12.00	12.00	12.00	12.00	12.00	12.00	12.00	12.00	12.00
No. of Lanes in Pocket	1	0	0	0	0	0	2	0	0	1	0	0
Pocket Length [ft]	195.00	100.00	100.00	100.00	100.00	100.00	230.00	100.00	100.00	175.00	100.00	100.00
Speed [mph]	45.00			25.00			45.00			45.00		
Grade [%]	0.00			0.00			0.00			0.00		
Crosswalk	Yes			Yes			No			Yes		

Volumes

Name	Vincent Avenue			Vincent Avenue			Gladstone Street			Gladstone Street		
Base Volume Input [veh/h]	113	24	475	16	25	18	14	862	160	150	203	3
Base Volume Adjustment Factor	1.0000	1.0000	1.0000	1.0000	1.0000	1.0000	1.0000	1.0000	1.0000	1.0000	1.0000	1.0000
Heavy Vehicles Percentage [%]	2.00	2.00	2.00	2.00	2.00	2.00	2.00	2.00	2.00	2.00	2.00	2.00
Growth Rate	1.01	1.01	1.01	1.01	1.01	1.01	1.01	1.01	1.01	1.01	1.01	1.01
In-Process Volume [veh/h]	0	0	0	0	0	0	0	0	0	0	0	0
Site-Generated Trips [veh/h]	74	0	106	0	0	0	0	16	33	19	6	0
Diverted Trips [veh/h]	0	0	0	0	0	0	0	0	0	0	0	0
Pass-by Trips [veh/h]	0	0	0	0	0	0	0	0	0	0	0	0
Existing Site Adjustment Volume [veh/h]	0	0	0	0	0	0	0	0	0	0	0	0
Other Volume [veh/h]	0	0	0	0	0	0	0	0	0	0	0	0
Total Hourly Volume [veh/h]	188	24	586	16	25	18	14	887	195	171	211	3
Peak Hour Factor	1.0000	1.0000	1.0000	1.0000	1.0000	1.0000	1.0000	1.0000	1.0000	1.0000	1.0000	1.0000
Other Adjustment Factor	1.0000	1.0000	1.0000	1.0000	1.0000	1.0000	1.0000	1.0000	1.0000	1.0000	1.0000	1.0000
Total 15-Minute Volume [veh/h]	47	6	147	4	6	5	4	222	49	43	53	1
Total Analysis Volume [veh/h]	188	24	586	16	25	18	14	887	195	171	211	3
Pedestrian Volume [ped/h]	0			0			0			0		
Bicycle Volume [bicycles/h]	0			0			0			0		

Intersection Settings

Cycle Length [s]	100
Lost time [s]	10.00

Phasing & Timing

Control Type	Split	Split	Split	Split	Split	Split	Protecte	Permiss	Permiss	Protecte	Permiss	Permiss
Signal group	0	2	0	0	6	0	3	8	0	7	4	0
Auxiliary Signal Groups												
Lead / Lag	-	-	-	-	-	-	Lead	-	-	Lead	-	-

Movement, Approach, & Intersection Results

V/C, Movement V/C Ratio	0.06	0.17	0.17	0.01	0.03	0.03	0.00	0.34	0.34	0.11	0.07	0.07
Intersection LOS	C											
Intersection V/C	0.761											

Intersection Level Of Service Report

Intersection 18: Vincent Avenue (NS) at Arrow Highway (EW)

Control Type:	Signalized	Delay (sec / veh):	-
Analysis Method:	ICU 1	Level Of Service:	D
Analysis Period:	15 minutes	Volume to Capacity (v/c):	0.805

Intersection Setup

Name	Vincent Avenue			Vincent Avenue			Arrow Highway			Arrow Highway		
Approach	Northbound			Southbound			Eastbound			Westbound		
Lane Configuration												
Turning Movement	Left	Thru	Right	Left	Thru	Right	Left	Thru	Right	Left	Thru	Right
Lane Width [ft]	12.00	12.00	12.00	12.00	12.00	12.00	12.00	12.00	12.00	12.00	12.00	12.00
No. of Lanes in Pocket	1	0	0	1	0	0	1	0	0	1	0	0
Pocket Length [ft]	200.00	100.00	100.00	200.00	100.00	100.00	215.00	100.00	100.00	160.00	100.00	100.00
Speed [mph]	45.00			45.00			45.00			45.00		
Grade [%]	0.00			0.00			0.00			0.00		
Crosswalk	Yes			Yes			Yes			Yes		

Volumes

Name	Vincent Avenue			Vincent Avenue			Arrow Highway			Arrow Highway		
Base Volume Input [veh/h]	78	314	143	38	276	84	228	1417	171	106	485	40
Base Volume Adjustment Factor	1.0000	1.0000	1.0000	1.0000	1.0000	1.0000	1.0000	1.0000	1.0000	1.0000	1.0000	1.0000
Heavy Vehicles Percentage [%]	2.00	2.00	2.00	2.00	2.00	2.00	2.00	2.00	2.00	2.00	2.00	2.00
Growth Rate	1.01	1.01	1.01	1.01	1.01	1.01	1.01	1.01	1.01	1.01	1.01	1.01
In-Process Volume [veh/h]	0	0	0	0	0	0	0	0	0	0	0	0
Site-Generated Trips [veh/h]	143	150	25	5	47	42	7	51	47	5	33	1
Diverted Trips [veh/h]	0	0	0	0	0	0	0	0	0	0	0	0
Pass-by Trips [veh/h]	0	0	0	0	0	0	0	0	0	0	0	0
Existing Site Adjustment Volume [veh/h]	0	0	0	0	0	0	0	0	0	0	0	0
Other Volume [veh/h]	0	0	0	0	0	0	0	0	0	0	0	0
Total Hourly Volume [veh/h]	222	467	169	43	326	127	237	1482	220	112	523	41
Peak Hour Factor	1.0000	1.0000	1.0000	1.0000	1.0000	1.0000	1.0000	1.0000	1.0000	1.0000	1.0000	1.0000
Other Adjustment Factor	1.0000	1.0000	1.0000	1.0000	1.0000	1.0000	1.0000	1.0000	1.0000	1.0000	1.0000	1.0000
Total 15-Minute Volume [veh/h]	56	117	42	11	82	32	59	371	55	28	131	10
Total Analysis Volume [veh/h]	222	467	169	43	326	127	237	1482	220	112	523	41
Pedestrian Volume [ped/h]	0			0			0			0		
Bicycle Volume [bicycles/h]	0			0			0			0		

Intersection Settings

Cycle Length [s]	100
Lost time [s]	10.00

Phasing & Timing

Control Type	Permiss	Permiss	Permiss	Permiss	Permiss	Permiss	Permiss	Permiss	Permiss	Permiss	Permiss	Permiss
Signal group	0	2	0	0	6	0	0	8	0	0	4	0
Auxiliary Signal Groups												
Lead / Lag	-	-	-	-	-	-	-	-	-	-	-	-

Movement, Approach, & Intersection Results

V/C, Movement V/C Ratio	0.14	0.20	0.20	0.03	0.14	0.14	0.15	0.35	0.35	0.07	0.16	0.03
Intersection LOS	D											
Intersection V/C	0.805											

Intersection Level Of Service Report

Intersection 34: Alameda Ave/I-210 WB Ramps (NS) at 1st St (EW)

Control Type:	Signalized	Delay (sec / veh):	-
Analysis Method:	ICU 1	Level Of Service:	B
Analysis Period:	15 minutes	Volume to Capacity (v/c):	0.679

Intersection Setup

Name											
Approach	Northbound			Southbound			Eastbound			Westbound		
Lane Configuration												
Turning Movement	Left	Thru	Right	Left	Thru	Right	Left	Thru	Right	Left	Thru	Right
Lane Width [ft]	12.00	12.00	12.00	12.00	12.00	12.00	12.00	12.00	12.00	12.00	12.00	12.00
No. of Lanes in Pocket	1	0	0	1	0	1	1	0	1	1	0	1
Pocket Length [ft]	325.00	100.00	100.00	50.00	100.00	150.00	55.00	100.00	100.00	100.00	100.00	110.00
Speed [mph]	35.00			35.00			35.00			35.00		
Grade [%]	0.00			0.00			0.00			0.00		
Crosswalk	Yes			Yes			Yes			Yes		

Volumes

Name												
Base Volume Input [veh/h]	366	87	94	46	24	38	20	604	207	177	305	43
Base Volume Adjustment Factor	1.0000	1.0000	1.0000	1.0000	1.0000	1.0000	1.0000	1.0000	1.0000	1.0000	1.0000	1.0000
Heavy Vehicles Percentage [%]	2.00	2.00	2.00	2.00	2.00	2.00	2.00	2.00	2.00	2.00	2.00	2.00
Growth Rate	1.02	1.02	1.02	1.02	1.02	1.02	1.02	1.02	1.02	1.02	1.02	1.02
In-Process Volume [veh/h]	0	0	0	0	0	0	0	0	0	0	0	0
Site-Generated Trips [veh/h]	61	0	0	0	0	0	0	0	28	0	0	0
Diverted Trips [veh/h]	0	0	0	0	0	0	0	0	0	0	0	0
Pass-by Trips [veh/h]	0	0	0	0	0	0	0	0	0	0	0	0
Existing Site Adjustment Volume [veh/h]	0	0	0	0	0	0	0	0	0	0	0	0
Other Volume [veh/h]	0	0	0	0	0	0	0	0	0	0	0	0
Total Hourly Volume [veh/h]	434	89	96	47	24	39	20	616	239	181	311	44
Peak Hour Factor	0.9400	0.9400	0.9400	0.9400	0.9400	0.9400	0.9400	0.9400	0.9400	0.9400	0.9400	0.9400
Other Adjustment Factor	1.0000	1.0000	1.0000	1.0000	1.0000	1.0000	1.0000	1.0000	1.0000	1.0000	1.0000	1.0000
Total 15-Minute Volume [veh/h]	115	24	26	13	6	10	5	164	64	48	83	12
Total Analysis Volume [veh/h]	462	95	102	50	26	41	21	655	254	193	331	47
Pedestrian Volume [ped/h]	0			0			0			0		
Bicycle Volume [bicycles/h]	0			0			0			0		

Intersection Settings

Cycle Length [s]	100
Lost time [s]	10.00

Phasing & Timing

Control Type	Permiss	Permiss	Permiss	Permiss	Permiss	Permiss	Protecte	Permiss	Permiss	Protecte	Permiss	Permiss
Signal group	0	2	0	0	6	0	3	8	0	7	4	0
Auxiliary Signal Groups												
Lead / Lag	-	-	-	-	-	-	Lead	-	-	Lead	-	-

Movement, Approach, & Intersection Results

V/C, Movement V/C Ratio	0.29	0.12	0.12	0.03	0.02	0.03	0.01	0.20	0.16	0.06	0.21	0.03
Intersection LOS	B											
Intersection V/C	0.679											

APPENDIX D

OTHER DEVELOPMENT DATA

Name	Address	Project Info	Status
Nu-Way Pit	13620 Live Oak Lane	Pilot Flying J Travel Center and New Truck Sales Dealership	On hold
JH Pit	1200,1220, 1270 Arrow Highway	1,550,00 SF Business Park	Application submitted
Panattoni	16203-16233 Arrow Highway	130,366 SF (4 Buildings) Light industrial	Pending submittal
Panattoni	242 Live Oak Avenue	85,400 SF Industrial building	Entitlement complete/environmental review underway
Ayala Industrial Bldg.	5589 Ayala Avenue	80,000 SF Industrial building	In Building Plan Check
Irwindale Med. Clinic	15768 Arrow Highway	13,300 SF Medical clinic	Occupied
Wendy's Restaurant	15768 Arrow Highway	2,300 SF restaurant w/drive-thru	In Building Plan Check
Kaiser Med. Office Bldg.	12761 Schabarum Avenue	90,000 SF Medical Office Building; 113,160 SF Parking Structure	Building permits issued; grading and construction commenced
Reliance II	15990 Foothill Boulevard (SWC of Foothill Blvd. and Irwindale Avenue)	1,863,500 SF Industrial/BP and Commerical	Inititative approved by City Council
City of Hope	1500 E. Duarte Road	90,000 SF Medical Office Building	Application submitted
North Kincaid			

CUMULATIVE PROJECTS LIST - MARCH 2018

Project #	Address	Description of Project	PC Approved
TPM 74787, V 16-19	845 S Sunkist Ave	3-Lot Subdivision	11/28/2017
PP 16-07, CUP 16-12, V 16-20, TRP 17-03	1400 West Covina Pkwy	121,061 SF (131 bed) Assisted Living Facility	9/26/2017
PP 16-02, AUP 17-26	1360 W Garvey Ave S	New Bakery and Café	9/12/2017
TPM 74133, V 16-08	2222 W Garvey Ave	3-Lot Subdivision (2250 W Garvey, 1035 S Willow, 1039 S Willow)	3/28/2017
GPA 14-01, ZC 14-01, PP 14-03, CUP 14-20 & V 14-23 PP 15-07	1388 E Garvey Ave South	Public storage facility	12/15/2015 1st Ext - 12/13/17 - 2nd Ext - 12/13/18
TTM 73652, V 15-18	1920 Pacific Lane	7-unit subdivision	NOT ENTITLED
PP 18-02, CUP 18-02	1415 W Garvey Ave N	78,703 SF (107-bed) assisted living facility	NOT ENTITLED

CITY OF BALDWIN PARK PROJECTS

LOCATION/NAME OF PROJECT	LAND USE	NUMBER /TYPE OF DWELLING UNIT	1000 S.F. (COMMERCIAL /INDUSTRIAL)	STATUS
4820-4828 Fortin Street	Single Family Residential	10--detached		Completed
LA Fitness - 855-018-002 and 003 (Garvey Ave.)	Private Recreational Facility		45 TSF	Completed
	Retail / Restaurant Building		6.8 TSF	Completed
Specfic Plan Modification - 8552-017 004, 068, 069, 070, 071 ,072, 073, 074, 075, 076, 077, and 078	Single Family Residential	51--detached		Under construction
13226-13230 Ramona Blvd.	MFR--Condominiums	13--attached		Completed
5014 Heintz St.	Warehouse		1.5 TSF	Under Construction
4142-4144 La Rica Ave.	MFR--Condominiums	8--attached		Completed
3726 Puente Ave.	Condominiums	4--attached		Plan Check
14911 Pacific Ave.	Commercial		1.740 TSF	Under construction
	Apartments	4--attached		Under construction
3913 Stewart Ave.	Multi-Family Residential	4--attached		Plan Check
1011 Baldwin Park Blvd.	Parking Structure Extension for Kasier Hospital		825 Spaces	Completed
1011 Baldwin Park Blvd.	Medical Office Building		60 TSF	Under construction
3540 Barnes Ave.	Single Family Residential	8--detached		In Review
14622 Dalewood St.	Office Building--combo of medical and professional		60 TSF	In Review
5044 Gayhurst Ave.	Warehouse		2.6 TSF	Plan Check
15000 Badillo St.	Multi-Family Residential Condo	16--attached		Plan Check
15110 -20 Badillo St.	Multi-Family Residential Condo	12--attached		Plan Check
12762-70 Torch St	Multi-Family Residential Condo	24--attached		Plan Check
3715-3725 Puente Ave, 14801 Pacific Ave, and 14827-14839 Pacific Ave	Single Family Residential	47-detached		Under construction
4923-4929 Fortin St, 15138 Nubia St, APN 8413-013-025	Single Family Residential	15-detached		Under construction
5115 Azusa Canyon Road	Warehouse Condominium		90 TSF (10 units)	Plan Check

Revised 5/15/2018	Project Name	Type of Development	Developer	Project Address	Project Description	Project Phase
	A-2: Azusa/9th Street	Mixed Use	Costanzo Investments, LLC		Retail: 13,000 to 15,000 SF Residential: 60,000 to 70,000SF	Preliminary Plan Review
	Azusa Regency Villas	Mixed Use	The Charles Company	Block 37	Retail: +/- 14,840 SF Residential: 70 Units (73,076 SF)	Preliminary Plan Review
		Mixed Use	Spectrum Properties, Inc.	525 N. Azusa Ave.	Retail: 4,600 SF Residential: 102 Units (78,664 SF)	Preliminary Plan Review
		Mixed Use	Golden Phoenix Construction	670 E. Foothill Blvd.	Retail: +/- 500 SF Medical Office: +/- 8,900 SF	Preliminary Plan Review
		Residential	California Grand Village Azusa Greens	Todd Ave./Sierra Ave.	Residential: 3-level 256 Luxury Units for Seniors	Entitlement Phase
		Industrial	Astaur Keymetlyan	198 S. Peckham Rd.	12,184 SF Warehouse	Entitlement Phase

	Azusa Business Center	Industrial	Proficiency Capital	1025 N. Todd Ave.	7 Industrial Buildings +/-462,491 SF	Entitlement Phase
	Block 36	Mixed Use	Serrano Development Group		Retail: 32,530SF Residential: 120 Units (181,220SF)	Entitlement Phase
Raising Cane's Chicken Fingers	Raising Cane's Chicken Fingers	Commercial	Raising Cane's Chicken Fingers	855 E. Alosta Ave. (Former Papa Pie Pizza)	Retail: 4,086 SF	Entitlement Phase
IN-N-OUT BURGER	In-N-Out Burger	Commercial	In-N-Out Burger	998 E. Alosta Ave.	Retail: 9,110 SF	Entitlement Phase
	Starbucks Coffee	Commercial		295 S. Azusa Ave.	Retail: 1,850 SF with drive-thru	Plan Check
	Lagunitas Brewing Company	Industrial		1021 Todd Ave.	342,629 SF The Restaurant and Tap Room will be 52,820.	Plan Check

	Metro Walk	Residential	Olson Urban Housing	803-813 N. Dalton Ave	30-(3) Story Units	Under Construction
	CT Azusa Center	Industrial	CT Realty	301 E. Aerojet Ave	3 Industrial Buildings: Building Area (A): 29,500 SF Building Area (B): 46,600 SF Building Area (C): 105,700 SF	Under Construction
	The Promenade at Citrus	Commercial	Rosedale Land Partners II	864 E. The Promenade	Retail: 8,200 SF Residential: 112 Townhomes	Under Construction
	Popeye's Louisiana Kitchen	Commercial		994 E. Alosta Ave.	2,279 SF	Under Construction
	Senna	Residential	William Homes, Inc.	475 E. Arrow Highway	70 Tri Level Townhomes	Under Construction
		Industrial	Crow Holdings Industrial	601 E. Vincent Ave.	Building Area: +/- 146,000 SF	Entitled.

	Gladstone Senior Villas	Residential	Chaplan Mu	360-416 Gladstone St.	Residential: 60 Units Total with 6 Affordable Units 16,647 SF	Entitled.
		Mixed Use	Andy Xie	619 N. San Gabriel	Retail: 888 SF Residential: 6 Units (8,998SF)	Entitled.
		Mixed Use		300 W. Foothill Blvd.	Retail: 700 SF Residenital: 8 Units (14,690 SF)	Entitled.
	D-Club	Commercial	EFPAR Development	975 E. Foothill Blvd.	Commercial Retail Center Building Area (1): 2,800 SF Building Area (2): 2,800 SF Building Area (3): 9,550 SF	Due Diligence

APPENDIX E

TRAFFIC SIGNAL WARRANT WORKSHEETS

PEAK HOUR VOLUME WARRANT
(Rural Areas)

Existing

Major Street Name = **Live Oak Avenue** Total of Both Approaches (VPH) = **1956**
Number of Approach Lanes Major Street = **2**

Minor Street Name = **I-605 Fwy NB Ramps** High Volume Approach (VPH) = **621**
Number of Approach Lanes Minor Street = **1**

WARRANTED FOR A SIGNAL

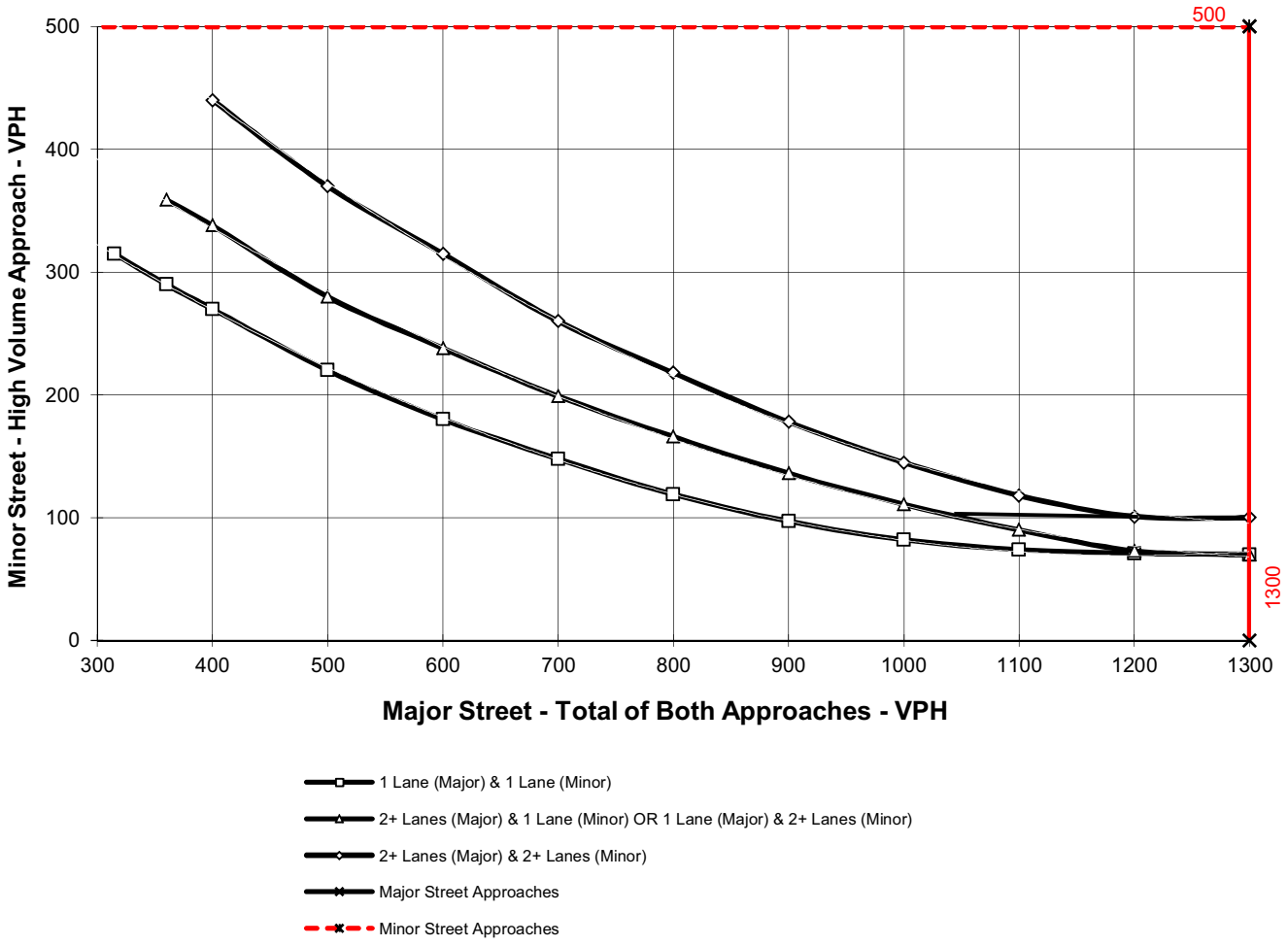

** NOTE:
100 VPH APPLIES AS THE LOWER THRESHOLD VOLUME FOR A MINOR STREET APPROACH WITH TWO OR MORE LANES AND 75 VPH APPLIES AS THE LOWER THRESHOLD VOLUME FOR A MINOR STREET APPROACHING WITH ONE LANE.

APPENDIX F

SGVCOG VMT EVALUATION TOOL REPORT

SGVCOG VMT Evaluation Tool Report

Project Details

Timestamp of Analysis: December 15, 2020, 01:55:22 PM

Project Name: Vincent Avenue Industrial Building

Project Description: 545,735 SF Industrial Building

Project Location

Jurisdiction: Irwindale

APN	TAZ
8417-034-015	22307100
8417-034-016	22307100

Inside a TPA?

No (Fail)

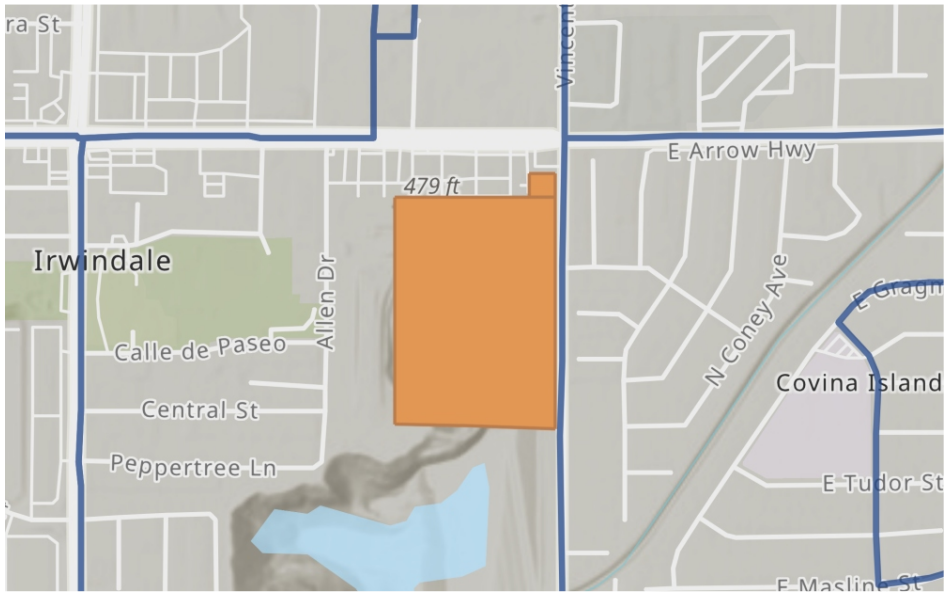

Analysis Details

Data Version: SCAG Regional Travel Demand Model
2016 RTP Base Year 2012

Analysis Methodology: TAZ

Baseline Year: 2020

Project Land Use

Residential:

Single Family DU:	
Multifamily DU:	
Total DUs:	0

Non-Residential:

Office KSF:	
Local Serving Retail KSF:	
Industrial KSF:	545

Residential Affordability (percent of all units):

Extremely Low Income:	0 %
Very Low Income:	0 %
Low Income:	0 %

Parking:

Motor Vehicle Parking:	199
Bicycle Parking:	9

Industrial Vehicle Miles Traveled (VMT) Screening Results

Land Use Type 1:	Industrial
VMT Without Project 1:	Home-based Work VMT per Worker
VMT Baseline Description 1:	City Average
VMT Baseline Value 1:	22.51
VMT Threshold Description 1:	0%
Land Use 1 has been Pre-Screened by the Local Jurisdiction:	N/A

	Without Project	With Project & Tier 1-3 VMT Reductions	With Project & All VMT Reductions
Project Generated Vehicle Miles Traveled (VMT) Rate	21.72	21.72	17.38
Low VMT Screening Analysis	Yes (Pass)	Yes (Pass)	Yes (Pass)

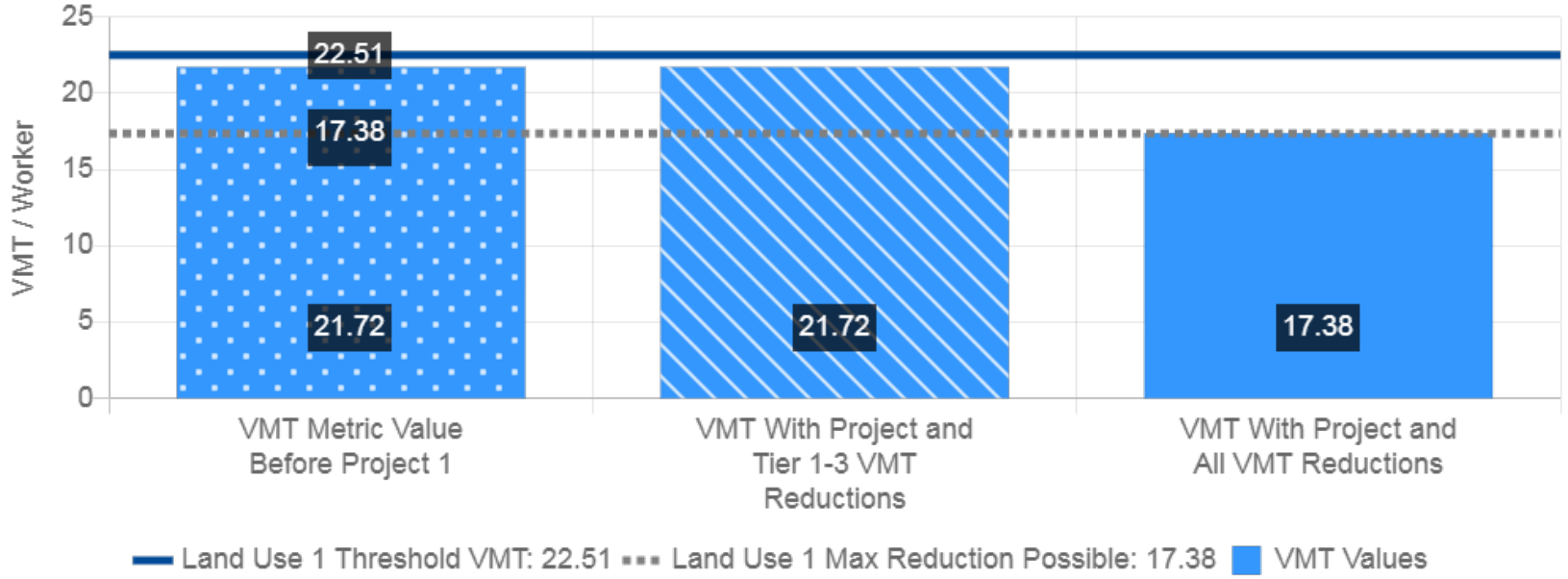

Tier 4 TDM Programs

TP11 Alternative Transportation Benefits

Percent of Employees Eligible for Alternative Transportation Benefits:	100 %



GANDDINI GROUP, INC.
550 Parkcenter Drive, Suite 202, Santa Ana, CA 92705
714.795.3100 | www.ganddini.com