Appendix M Title 22 Engineering Report

Title 22 Engineering Report

for

Prologis IPC II
San Joaquin County, CA

Prepared by:

Signature

2/13/25
Date

William J (Jim) Miller, P.E., RCE No. 88117
Development Services Manager

Signature

2/13/25
Date

Charles Conarro, P.E., RCE No. 93613
Project Civil Engineer

Kier + Wright - Project # A09500-466
February 13, 2025

KIER+WRIGHT

2850 Collier Canyon Road
Livermore, CA 94551
Phone 925.245.8788

TABLE OF CONTENTS

1 INTRODUCTION 1
1.1 BACKGROUND 1
1.2 STAKEHOLDERS 1
2 PROJECT OVERVIEW 1
2.1 RULES AND REGULATIONS 2
2.2 RAW WASTEWATER CHARACTERISTICS 2
2.3 TREATMENT PROCESS 3
2.3.1 PROCESS FLOW SUMMARY 3
2.3.2 FILTRATION DESIGN 4
2.3.2.1 CHEMICAL USE 4
2.4 PLANT RELIABILITY FEATURES 4
2.4.1 CONTROL SYSTEM 5
2.4.2 STAFFING 5
2.5 SUPPLEMENTAL WATER SUPPLY 6
2.5.1 SOURCE 6
2.5.2 WATER QUALITY 6
2.6 MONITORING AND REPORTING 6
2.6.1 TESTING 7
2.6.2 REPORTING 7
3 CONTINGENCY PLAN 7
4 TRANSMISSION AND DISTRIBUTION SYSTEM 8
5 USE AREAS 8
5.1 LAND USE 8
5.2 PROPOSED REUSE 8
5.3 CONTAINMENT MEASURES 9
6 IMPOUNDMENTS 9
7 COOLING 9
8 GROUNDWATER RECHARGE 9
9 DUAL PLUMBED USE AREAS 9
10 USE AREA DESIGN 10
11 USE AREA INSPECTIONS AND MONITORING 10
12 EMPLOYEE TRAINING 10
13 REFERENCES 10

LIST OF TABLES

Table 1 – Typical Composition of Untreated Domestic Wastewater

Table 2 – Plant Effluent Quality Requirements

Table 3 – Plant Reliability Features

Table 4 - Use Area Inspection and Monitoring Data

APPENDICES

Appendix A – Recycled Water Exhibit

Appendix B – Water Demand Assumptions

Appendix C – Process Flow Diagram

Appendix D – Process Narrative

LIST OF ABBREVIATIONS

AXP	Post-anoxic
BBID	Byron Bethany Irrigation District
CSD	Community Service District
CT	Contact Time
DO	Dissolved oxygen
DDW	Department of Drinking Water
GPD	Gallons per day
IPC	International Park of Commerce
MBR	Membrane bioreactor
MG	Million-gallon
MGD	Million gallons per day
mg/L	Milligrams per liter
mm	Millimeter
MPN	Most Probably Number
MRP	Monitoring and Reporting Program
NOA	Notice of applicability
NTU	Nephelometric turbidity unit
PA	Pre-aeration
PAX	Pre-anoxic
PH	Peak hour flow
RWQCB	Regional Water Quality Control Board
SiC	Silicon carbide
SWRCB	State Water Resources Control Board
TMP	Transmembrane pressure
TSS	Total suspended solids
UV	Ultraviolet

1 INTRODUCTION

1.1 BACKGROUND

The California State Water Resources Control Board (SWRCB) requires the preparation of a Title 22 Engineering Report during the permitting of new recycled water projects. The purpose of this report is to demonstrate compliance with:

- Regulations Related to Recycled Water, Title 17, Sections 7583-7586 and Sections 7601-7605 (Title 17) – State Water Resources Control Board
- Regulations Related to Recycled Water, Title 22, Section 6001-60355 (Title 22) – State Water Resources Control Board
- Water Reclamation Requirements for Recycled Water Use, Water Quality Order 2016-0068-DDW (Order 2016-0068-DDW) – State Water Resources Control Board

Prologis will seek the SWRCB's approval to utilize disinfected tertiary treated recycled water for landscape irrigation use. Once approved, Prologis will submit a Notice of Intent application to the Regional Water Quality Control Board (RWQCB) to be permitted as the Producer, Distributor, and User of the proposed recycled water program.

On behalf of Prologis, Kier + Wright has prepared this Title 22 Engineering Report to establish compliance with the regulations set forth by the SWRCB and allow for the required regulatory review and approval for the proposed recycled water treatment and distribution facilities serving the proposed International Park of Commerce (IPC II) development in Tracy, California.

1.2 STAKEHOLDERS

- State Water Resources Control Board – Responsible for reviewing and approving a recycled water project before it can be permitted by the RWQCB
- Regional Water Quality Control Board – Responsible for issuing the Notice of Applicability for coverage under Order 2016-0068-DDW, and enforcing the program requirements
- San Joaquin County (County) – the project must abide by the County's applicable engineering standards
- Prologis – Owner of the project; Administrator of the recycled water program; and Producer, Distributor, and User of the recycled water
- Kier + Wright – Providing engineering services

2 PROJECT OVERVIEW

Prologis is proposing a new warehousing development in an unincorporated area of San Joaquin County, California. The site is bisected by W Schulte Road and bordered by the extension of Promontory Parkway to the north and Pavilion Parkway to the west. The project site is 282-acres and will consist of three parcels (APNs 209-240-037, 209-250-010, and 209-250-037). The project will include the construction of 6 warehouse/distribution buildings, totaling 5.4 million square feet.

Prologis proposes to serve the IPC II development with disinfected tertiary treated recycled water for landscape irrigation. Appendix A shows the proposed recycled water facilities, including the post-treatment storage, and a sludge handling facility. Further information about the proposed reclamation project, including wastewater treatment processes, water quality, use areas, and the recycled water distribution system is provided in the sections below.

2.1 RULES AND REGULATIONS

Prologis will adopt the rules and regulations stipulated in Title 17, Title 22, and Order 2016-0068-DDW, for use of disinfected tertiary recycled water for landscape irrigation. These regulations will encompass the design, construction, operation, and maintenance of the proposed recycled water facilities and use areas for IPC II. As the Producer, Distributor and User of recycled water, Prologis will be responsible for implementing these regulations under the oversight of the RWQCB and SWRCB. Prologis is in discussions with potential operators for the facilities. Prologis will also form a community service district (CSD) to oversee the development. The operator of the system will contract with the CSD.

Once the project is permitted by the RWQCB, a Notice of Applicability (NOA) will be issued as a formal notice that the recycled water program is eligible for coverage under Order 2016-0068-DDW. The NOA will include additional project specific regulations, which Prologis will abide by.

2.2 RAW WASTEWATER CHARACTERISTICS

The source of wastewater will come from five warehouse buildings, totaling 5.4 million square feet. Of the total square footage of warehouse building, five percent is assumed to be dedicated office space. Source control programs, especially those involving wastewater streams associated with the typical characterization of industrial waste are not anticipated for the site.

The influent wastewater quality is assumed to be comparable to the typical composition of untreated domestic water. Table 1 characterizes the typical levels of contaminant concentrations in categories of low strength, medium strength, and high strength. As a conservative planning measure, the project's wastewater influent is expected to fall in between "medium strength" and "high strength", on account there being less dilution from the blending of other wastewater generating sources (i.e. food preparation, laundry, bathing).

Table 1: Typical Composition of Untreated Domestic Wastewater

CONTAMINANT	UNITS	LOW STRENGTH	MEDIUM STRENGTH	HIGH STRENGTH
Solids, total (TS)	mg/L	390	720	1220
Dissolved, total (TDS)	mg/L	270	500	860
Fixed	mg/L	160	300	520
Volatile	mg/L	110	200	340
Suspended solids, total (TSS)	mg/L	120	210	400
Fixed	mg/L	25	50	85
Volatile	mg/L	95	160	315
Settleable solids	mg/L	5	10	20
5-d, 20˚C (BOD_5, 20˚C)	mg/L	110	190	350
Total organic carbon (TOC)	mg/L	80	140	260
Chemical oxygen demand (COD)	mg/L	250	430	800
Nitrogen (total as N)	mg/L	20	40	70
Organic	mg/L	8	15	25
Free ammonia	mg/L	12	25	45
Nitrites	mg/L	0	0	0
Nitrates	mg/L	0	0	0
Phosphorus (total as P)	mg/L	4	7	12
Organic	mg/L	1	2	4

Table 1: Typical Composition of Untreated Domestic Wastewater				
CONTAMINANT	UNITS	LOW STRENGTH	MEDIUM STRENGTH	HIGH STRENGTH
Inorganic	mg/L	3	5	10
Chlorides	mg/L	30	50	90
Sulfate	mg/L	20	30	50
Oil and grease	mg/L	50	90	100
Volatile organic compounds (VOCs)	mg/L	<100	100-400	>400
Total coliform	No./100 mL	10^6-10^8	10^7-10^9	10^7-10^{10}
Fecal coliform	No./100 mL	10^3-10^5	10^4-10^6	10^5-10^8
Cryptosporidium oocysts	No./100 mL	10^{-1}-10^0	10^{-1}-10^1	10^{-1}-10^2
Giardia lamblia cysts	No./100 mL	10^{-1}-10^1	10^{-1}-10^2	10^{-1}-10^3

Source: Metcalf & Eddy. "Wastewater Engineering Treatment and Reuse." 4th ed. Boston: McGraw Hill, 2003, (p.186)

2.3 TREATMENT PROCESS

The expected wastewater flows are based on an assumed sewer generation rate (10 gpd/employee) estimated based on similar (existing) warehousing developments in the area, in which the actual sewer generation rate ranged from 5 to 7.5 gpd/employee. The estimated wastewater production (47,000 gpd) was calculated by multiplying the estimated number of employees by the assumed wastewater generation rate (see Appendix B). The plant will be capable of producing primary effluent with one treatment train out of service in accordance with the reliability requirements under California Code of Regulations, Title 22, Articles 9 and 10.

The treatment process will incorporate a pre-treatment equalization tank, a screening zone, a pre-anoxic (PAX) zone, two pre-aeration (PA) zones, a post-anoxic (AXP) zone, and two membrane biorector (MBR) zones. BioWin wastewater process simulation software was used to evaluate and optimize the design based on the project constraints listed in Table 2 (refer to *Section 2.6 – Monitoring and Reporting* for a detailed discussion of the plant's effluent quality requirements).

Table 2 – Plant Effluent Quality Requirements	
PARAMETER	EFFLUENT QUALITY REQUIREMENT
BOD	5 mg/L
TSS	5 mg/L
TN	10 mg/L
Ammonia	1 mg/L
Fecal Coliform	2.2 No./100mL
Turbidity	0.2 NTU
Bacteria Removal	99.999 percent

2.3.1 PROCESS FLOW SUMMARY

Raw wastewater will first flow into an equalization tank, and then through a screening zone with coarse (5mm) and fine (2mm) screens. Solids will discharge from the screens into a disposable bagging system, and the screened influent will flow by gravity into the PAX zone. Next, a set of transfer pumps will transfer the water to the PA zone and then into the AXP zone. The MBR zones will be fed via overflow weirs from the AXP zone. Biologically treated

wastewater will be filtered using membrane units. Solids, including organics, bacteria, and most viruses will be rejected by the membrane system and retained in the mixed liquor, which will be returned to the PAX basin (with a 4Q recycle). A Return Activated Sludge overflow receiver will recycle by gravity back to the PAX zone completing the loop. Refer to Appendix C for a schematic of the plant's treatment train and Appendix D for the process narrative. A disinfectant may be added during wet weather conditions in which storage is utilized for an extended period of time.

The plant effluent will flow into a post-treatment storage tank, sized as a long-term storage provision for extended periods in which wastewater generation rates exceed irrigation demands, such as during wet weather conditions when irrigation may drop to zero. The storage tank will be sized to store at least 20 days of undisturbed sewer flow without any discharge into the irrigation system (per the California Code of Regulations, Title 22, Article 10). The final tank sizing will be based on the water balance results per the Central Valley Regional Water Quality Control Board requirements.

2.3.2 FILTRATION DESIGN

The MBR zone will contain two membrane units with microscopic pores (0.1-micron, nominal) that are smaller in diameter than common solids contaminants, bacteria, and most viruses. The treated water will be drawn through the membranes by permeate pumps, while material is transferred away, via scour air, into the crossflow of the mixed liquor. Backwash will occur by reversing the permeate pumps.

2.3.2.1 CHEMICAL USE

A cleaning process using chemicals may be used in addition to the periodic backwash cycles if excessive scaling is detected along the membranes. When the trans-membrane pressure increases past an operator setpoint, chlorine will be injected in between the permeate pumps and membrane stacks. If the chlorine rinse cycle fails to alleviate the mineral build up, citric acid will be injected. Both chemicals will be injected in between the permeate pumps and membrane stacks using an injection quill to promote an even dispersion within the pipeline. The chlorine rinse is expected to cycle every 4 weeks with each cycle using roughly 3.8 gallons of 12.5 percent chlorine solution. The citric acid rinse is expected to occur approximately four times per year with each cycle using roughly 1 gallon of 50 percent citric acid solution. Both chemicals will be stored in refillable drums or totes on-site.

At the end of the membrane clean cycle, clean water flushes any remaining dilute chemical into the MBR basin. It is important to note that no biological degradation will occur with this membrane clean process. There is no remaining chemical to dispose of or that will get introduced into the recycled water stream.

2.4 PLANT RELIABILITY FEATURES

The treatment plant will be designed with a high degree of redundancy through the use of multiple treatment units capable of handling influent flows, automatically actuated standby equipment, and a pre-treatment equalization tank. Additionally, the plant will be equipped with an emergency generator capable of powering all critical plant equipment during a loss of power event. Table 3 provides a summary of the plant's reliability features for each treatment process, in accordance with California Code of Regulations, Title 22, Article 10.

Table 3 – Plant Reliability Features	
TREATMENT PROCESS	RELIABILITY FEATURES
Primary Treatment – Primary treatment, as defined by the Water Boards, involves a wastewater treatment process that allows substances in wastewater that readily settle or float to be separated from the water being treated. A MBR process does not utilize a process that settles or floats substances. The plant headworks will be the closest process to primary treatment. The headworks will include a single 5mm coarse screen and three 2mm fine screens (two duty, one standby). Failure of the coarse screen will set off an alarm and influent will bypass to the fine screens. Failure of a fine screen will signal an alarm and the standby screen will take over.	• Alarm signaling process failure • Multiple units capable of producing effluent with one unit not in operation • Automatically actuated standby equipment
Biological Treatment – The biological treatment process will be governed by the aeration zones, which will be designed to handle 100% of the design flow. If one zone goes down, an alarm will be triggered, and automatically actuated standby equipment will be employed.	• Alarm signaling process failure • Multiple biological units capable of producing oxidized wastewater with one unit not in operation • Short-term retention • Automatically actuated standby equipment
Filtration – The filtration process will consist of two MBR zones designed for 100% of the design flow. During a membrane failure, an alarm will signal, and all flow will be diverted through the other membrane train.	• Alarm signaling process failure • Multiple filter units capable of treating the entire flow with one unit not in operation • Short-term retention

2.4.1 CONTROL SYSTEM

The plant's control system will be equipped with programing, dial out alarms and remote operation capabilities. Online monitoring will be included for flow, water level, TMP, TSS, turbidity, and DO. If a process failure occurs, the system will trigger an alarm to notify the operator, and standby equipment will be automatically actuated to take over.

2.4.2 STAFFING

An operator will be on site regularly to monitor the plant and recycled water use areas. If the plant is not staffed during an emergency condition, a telephone dialer will notify personnel capable of taking corrective action. A report will be generated following an alarm set off that will include the time, cause of failure and the corrective action taken if necessary.

2.5 SUPPLEMENTAL WATER SUPPLY

2.5.1 SOURCE

The recycled water generated by the treatment plant will need to be supplemented by an additional source to satisfy the estimated average day outdoor demand (see Appendix B).

Treated groundwater or water from the local irrigation district, Byron Bethany Irrigation District (BBID) will serve as the project's supplemental water supply for the recycled water system during periods in which irrigation demands exceed wastewater production rates. Per the California Code of Regulations, Title 22, Section 60315, the treated groundwater or BBID water will enter the recycled water system via an air gap at the top of the storage tank when the water in the storage tank drops to a certain level. Two potable water wells will be designed with enough capacity to meet the combined maximum day demands for indoor and outdoor use without using recycled water.

2.5.2 WATER QUALITY

Onsite groundwater testing indicates that treatment of the well water will not be necessary; although, selective treatment of specific contaminants will be proposed to improve taste, reduce the nuisances associated with elevated secondary contaminant levels, and benefit the wastewater quality during onsite treatment. The anticipated treatment method will be granular activated carbon or an ion exchange treatment system.

2.6 MONITORING AND REPORTING

Plant personnel will abide by the regulations of the Monitoring and Reporting Program (MRP) set forth by Order 2016-0068-DDW and Title 22.

Title 22 establishes effluent water quality standards based on the proposed type of water reuse (i.e. irrigation, impoundment, cooling, etc.). For purposes of this project, the use of recycled water for landscape irrigation requires that the wastewater effluent be filtered and subsequently disinfected, and compliant with the following criteria:

SECTION 60301.230. DISINFECTED TERTIARY RECYCLED WATER.

1) *A filtered wastewater has been disinfected by either:*

   - *A chlorine disinfection process following filtration that provides a contact time (CT) value not less than 450 milligram-minutes per liter at all times with a modal contact time of at least 90 minutes, based on peak dry weather design flow; or*
   - *A disinfection process that, when combined with the filtration process, has been demonstrated to inactivate and/or remove 99.999 percent of plaque-forming units of F-specific bacteriophage MS2, or poliovirus in the wastewater. A virus that is at least as resistant to disinfection as poliovirus may be used for purposes of the demonstration.*

2) *The median concentration of total coliform bacteria measured in the effluent must not exceed:*

   - *An Most Probably Number (MPN) of 2.2 per 100 milliliters utilizing the bacteriological results of the last seven days*
   - *An MPN of 23 per 100 milliliters utilizing the bacteriological results of the last seven days*

SECTION 60301.320. FILTERED WASTEWATER.

1) *Has been passed through a microfiltration membrane so that the turbidity of the filtered wastewater does not exceed any of the following:*

    - *0.2* nephelometric turbidity unit *(NTU) more than 5 percent of the time within a 24-hour period; and*
    - *0.5 NTU at any time.*

2.6.1 TESTING

The filtered effluent will be sampled once daily for total coliform downstream of the disinfection system. Results will be tested by an approved laboratory – "certified by the Department to perform microbiological analyses pursuant to Section 116390, Health and Safety Code." Wastewater following filtration will be continuously sampled for turbidity using a continuous turbidity meter and recorder. Turbidity will be monitored using the levels of recorded turbidity at intervals taken of no more than 1.2-hours over a 24-hour period. Additionally, a daily average operating filter effluent turbidity will be determined using the levels of recorded turbidity taken at four-hour intervals over 24-hour period. The results of the daily average turbidity will be reported quarterly to the RWQCB.

In accordance with the MRP, the priority pollutants listed in the Code of Federal Regulations require sampling every five years (since the flow will be less than 1 MGD).

2.6.2 REPORTING

A summary of the data collected will be reported in a tabular form and submitted to the RWQCB. A summary table of all inspections and enforcement activities initiated will be included in the annual report. The table will be accompanied with a discussion of compliance and the corrective action taken, as well as the planned or proposed actions, if necessary, to bring the effluent quality into compliance with the NOA and/or Order 2016-0068-DDW. Operations staff will submit a performance evaluation of the recycled water treatment facilities, including discussions of capacity issues, system problems, and a forecast of the flows anticipated in the next year.

Prologis will furnish any information that the RWQCB may request as it relates to recordkeeping per Order 2016-0068-DDW. Additionally, Prologis will allow the RWQCB or its authorized representatives to enter its recycled water facilities for inspection upon request.

3 CONTINGENCY PLAN

Prologis will take all reasonable steps to mitigate or prevent any discharge in violation of Order 2016-0068-DDW and Title 22. As described in *Section 2.4 – Plant Reliability Features*, the proposed wastewater treatment system will be designed with redundancy to ensure that an individual process failure does not interfere with the plant's ability to meet Title 22 effluent water quality for disinfected tertiary recycled water. The system will include turbidity meters and other analyzers equipped with alarms to detect inadequately treated water. In the event of an issue, alarms will alert operators, and the system will shut down as needed. Operational protocols will be developed to guide staff responses to such alarms. During maintenance or a shutdown of one treatment train, flow can be diverted through an alternate train to maintain operations.

If inadequately treated wastewater is detected, the water will be diverted back to the equalization tank and will not enter the storage tank. The tank will be sized to hold at least one day of the project's estimated wastewater generation pursuant to California Code of Regulations, Title 22, Section 60341(a). Prologis will discontinue delivery of recycled water during any period in which off-specification recycled water is delivered on site and the RWQCB and SWRCB will be notified immediately. Delivery of recycled water will not resume until all conditions which caused the violations have been corrected.

Treated groundwater from the potable water supply wells will serve as a supplemental supply. The supplemental water supply will be utilized in any case in which the storage tank water level drops below a setpoint.

4 TRANSMISSION AND DISTRIBUTION SYSTEM

Wastewater will be collected onsite and flow by gravity to a central lift station and be pumped into an equalization tank. A private lift station is assumed to be required for the building north of the WSID canal due to its location and elevation difference relative to the central lift station. The wastewater collection system will include redundancy and reliability features across all key components. The lift stations will be designed with two duty pumps each, sized to handle the design flow, ensuring continued operation if one pump fails. In addition, the system will incorporate backup power to maintain functionality during power outages. Gravity flow will be used wherever possible to minimize reliance on pumping.

The central lift station will pump all the wastewater generated onsite to an underground, concrete equalization tank. The equalization tank will be used to manage fluctuations in the daily flow rate and as a short-term storage provision during emergencies. Additionally, equalization prior to treatment stabilizes the influent flow rate and allows more consistent operation.

The tank will be sized to hold at least one day of the project's estimated wastewater pursuant to California Code of Regulations, Title 22, Section 60341(a).

Appendix A shows the proposed layout of the recycled water distribution system, as well as the proposed potable water and sanitary sewer lines within the service area. Recycled water use will not take place within 50 feet of any domestic water supply well, and the potable water system will maintain a minimum separation of 10 feet horizontally and 1 foot vertically from the recycled water and sanitary sewer lines.

5 USE AREAS

5.1 LAND USE

IPC II is planned over three parcels, totaling 282 acres, and will consist of 5.4 million square feet of industrial warehouse buildings. Of the total site acreage (282 acres), 246 acres (85%) is assumed to be developable and of the developable area 38.4 acres (or 15 percent) is assumed to be irrigated land. (see Appendix B). Prologis will retain ownership of the recycled water system and assume responsibility for the distribution and use of recycled water on site.

5.2 PROPOSED REUSE

The method of irrigation will be subsurface to eliminate the potential for public contact by spray or mist and to help contain the recycled water within the use area. Since subsurface irrigation

delivers water directly to the root zone and water is not present above the soil surface, irrigation may occur at any time throughout the day. The subsurface irrigation system is planned to operate every other day for approximately 90-minute cycles. The system will not operate within 24 hours of a rain event and will be applied at an agronomic rate to limit impacts to groundwater quality and prevent overwatering. The agronomic rate will consider soil type, climate, and plant demands.

Signs will be posted at use area entry points with the following wording: "RECYCLED WATER – DO NOT DRINK" with the universal "Do Not Drink" symbol. Signs will measure no less than 8" x 8" with white type against a purple background. In addition to use area signs, individual points of access to the recycled water system, quick connects and blow off points, will have signs with "RECYCLED WATER – DO NOT DRINK" superimposed over the universal "Do Not Drink" symbol. Prologis will ensure that any recycled water equipment, including water meters, backflow preventers, irrigation controllers, valves, valve box lids, pumps, tanks, and piping will be properly marked for recycled water use as required by the Title 22 and the California Health and Safety Code, Section 116815.

5.3 CONTAINMENT MEASURES

The use of subsurface irrigation will minimize the chance of over irrigated areas from draining out of the use area. Additionally, the site will be graded to minimize or eliminate the interaction between the recycled water and storm drainage. Drainage will be designed to flow from the southwest to the northeast.

6 IMPOUNDMENTS

Not applicable – Recycled water will not be used as a source of water supply for impoundments of any kind.

7 COOLING

Not applicable – Recycled water will not be used for industrial or commercial cooling or air conditioning.

8 GROUNDWATER RECHARGE

Not applicable – Recycled water will not be used to replenish groundwater supplies as part of a Groundwater Replenishment Reuse Project.

9 DUAL PLUMBED USE AREAS

Not applicable – The site is not considered a "Dual Plumbed Use Area". According to Title 22 (Section 60301.250), a system is considered "dual plumbed" when separate piping exists for recycled water and potable water within a facility where recycled water is used to serve plumbing outlets or landscape irrigations at individual residences. There are no residential demands associated with the proposed project.

The recycled water system will be separate from the potable water system and used exclusively to meet the irrigation demands throughout the project.

10 USE AREA DESIGN

The use area will be designed to:

1) *Protect the potable water system in accordance with the cross-connection control regulations of Title 17.* Treated groundwater will serve as a supplemental water supply and will enter the post-treatment storage tank via an air gap.

2) *Minimize the public's exposure to recycled water.* Public warning signs will be placed at public entries within the reclamation use areas to warn the public of recycled water use. Additionally, subsurface irrigation will be used to eliminate the potential for public contact by spray or mist.

3) *Reduce the potential for recycled water to leave the use area.* Subsurface irrigation will reduce the chance of over irrigated areas from draining out of the use area.

11 USE AREA INSPECTIONS AND MONITORING

The site will be monitored and maintained to assure that the operational conditions are in compliance with the use area design. Prologis will contract with a licensed operator to ensure compliance, or may dedicate the system to a group like Cal Water Services to own and operate the system. Table 4 depicts the use area inspection and monitoring plan.

Table 4 – Use Area Inspection and Monitoring Data

PARAMETER	UNITS	SAMPLE TYPE	SAMPLING FREQUENCY[a]	REPORTING FREQUENCY
Recycled Water User	--	--	--	Annually
Recycled Water Flow	gpd[b]	Meter[c]	Monthly	Annually
Acreage Applied[d]	Acres	Calculated	--	Annually
Application Rate	Inches/acre/year	Calculated	--	Annually
Soil Saturation/Ponding	--	Observation	Quarterly	Annually
Nuisance Odors/Vectors	--	Observation	Quarterly	Annually
Discharge Off-Site	--	Observation	Quarterly	Annually
Notification Signs[e]	--	Observation	Quarterly	Annually

[a] Or less frequently if approved by the Regional Water Board Executive Officer.
[b] gpd denotes gallons per day.
[a] Meter requires meter reading, a pump run time meter, or other approved method.
[a] Acreage applied denotes the acreage to which recycled water is applied.
[a] Notification signs shall be consistent with the requirements of California Code of Regulations, Title 22, Section 60310 (g).

12 EMPLOYEE TRAINING

Prologis will require by contract that operations personnel receive training to assure proper operation and maintenance of water recycling facilities, worker protection, and compliance with Order 2016-0068-DDW, Title 17, Title 22, and the official operations and maintenance manual provided by the packaged treatment plant manufacturer.

13 REFERENCES

American Water Works Association (1992). *Guidelines for the Distribution of Non-potable Water*.

California State Water Resources Control Board (Draft, February 2021). *Cross-Connection Control Handbook*.

California State Water Resources Control Board (March 2001). *Guidelines for the Preparation of an Engineering Report for the Production, Distribution and Use of Recycled Water*.

California State Water Resources Control Board (October 2018). *Regulations Related to Recycled Water.*

California State Water Resources Control Board (October 2018). *Title 22 Code of Regulations, Division 4, Chapter 3, Water Recycling Criteria*.

California State Water Resources Control Board (June 2016). Order WQ 2016-0068-DDW. *Water Reclamation Requirements for Recycled Water Use*.

California State Water Resources Control Board (December 2018). *Water Quality Control Policy for Recycled Water.*

National Water Research Institute (3rd Edition, August 2012). *Ultraviolet Disinfection Guidelines for Drinking Water and Water Reuse*.

Appendix A – Recycled Water Exhibit

VICINITY MAP

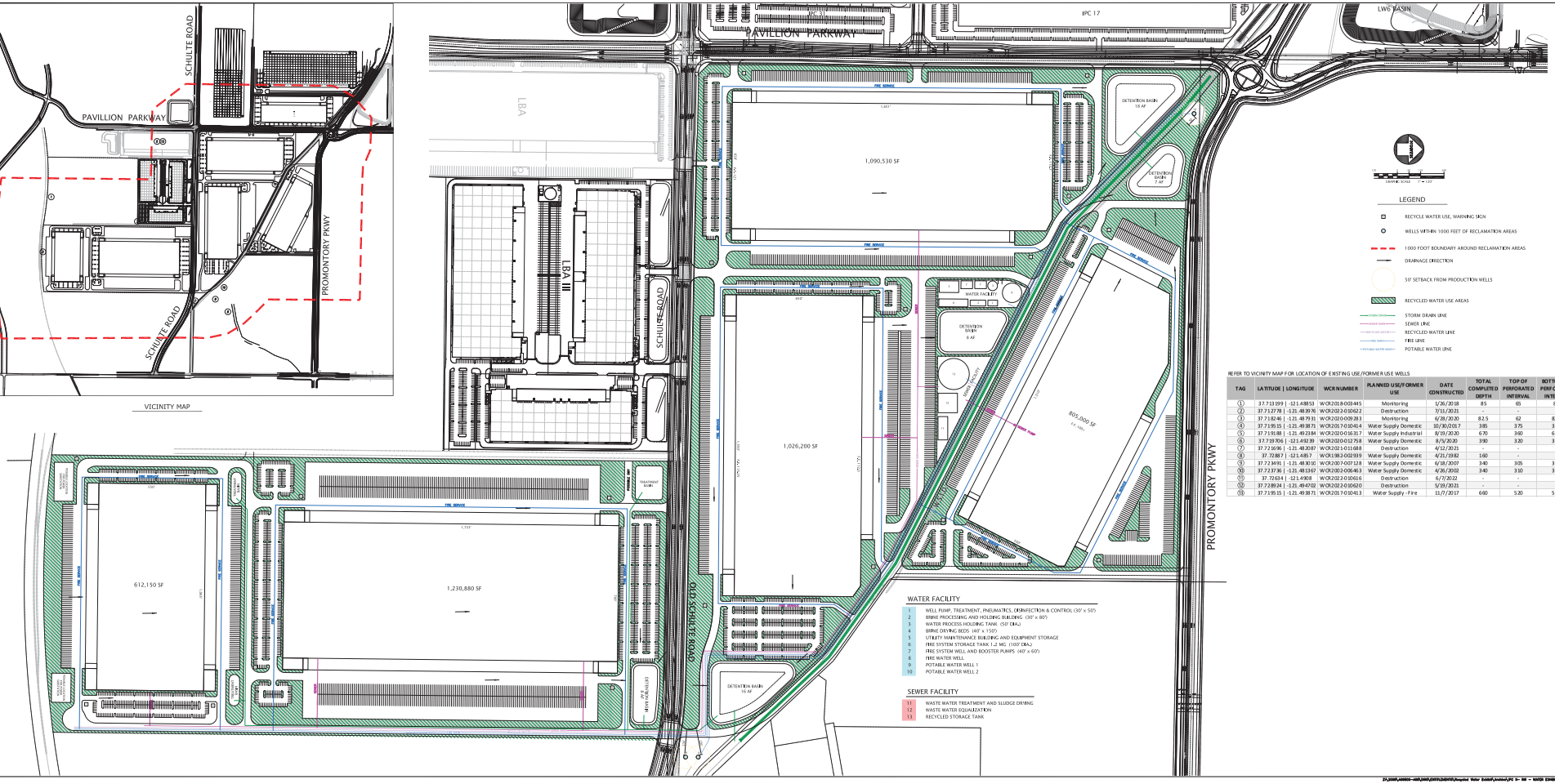

REFER TO VICINITY MAP FOR LOCATION OF EXISTING USE/FORMER USE WELLS

TAG	LATITUDE	LONGITUDE	WCR NUMBER	PLANNED USE/FORMER USE	DATE CONSTRUCTED	TOTAL COMPLETED DEPTH	TOP OF PERFORATED INTERVAL	BOTTOM OF PERFORATED INTERVAL
1	37.713199	-121.48853	WCR2018-003445	Monitoring	1/26/2018	85	65	85
2	37.71277 8	-121.48397 6	WCR2021-010622	Destruction	7/11/2021	-	-	-
3	37.71824 6	-121.48793 1	WCR2020-009283	Monitoring	6/28/2020	82.5	62	82.5
4	37.71915 5	-121.49387 1	WCR2017-010414	Water Supply Domestic	10/30/2017	385	375	385
5	37.71918 8	-121.49218 4	WCR2020-016317	Water Supply Industrial	8/19/2020	670	360	640
6	37.71870 6	-121.49239	WCR2020-012758	Water Supply Domestic	8/5/2020	390	320	385
7	37.72169 6	-121.48208 7	WCR2021-011688	Destruction	4/12/2021	-	-	-
8	37.72887	-121.48577	WCR1982-002939	Water Supply Domestic	4/21/1982	160	-	-
9	37.72349 1	-121.48303 8	WCR2007-007128	Water Supply Domestic	6/18/2007	340	305	325
10	37.72373 6	-121.48136 7	WCR2002-006463	Water Supply Domestic	4/26/2002	340	310	330
11	37.72634	-121.49058	WCR2022-010616	Destruction	6/7/2022	-	-	-
12	37.72892 4	-121.49470 2	WCR2022-010620	Destruction	5/19/2021	-	-	-
13	37.71915 5	-121.49387 1	WCR2017-010413	Water Supply -Fire	11/7/2017	660	520	535

WATER FACILITY

1	WELL PUMP, TREATMENT, PNEUMATICS, DISINFECTION & CONTROL (30' x 50')
2	BRINE PROCESSING AND HOLDING BUILDING (30' x 80')
3	WATER PROCESS HOLDING TANK (50' DIA.)
4	BRINE DRYING BEDS (40' x 150')
5	UTILITY MAINTENANCE BUILDING AND EQUIPMENT STORAGE
6	FIRE SYSTEM STORAGE TANK 1.2 MG (100' DIA.)
7	FIRE SYSTEM WELL AND BOOSTER PUMPS (40' x 60')
8	FIRE WATER WELL
9	POTABLE WATER WELL 1
10	POTABLE WATER WELL 2

SEWER FACILITY

11	WASTE WATER TREATMENT AND SLUDGE DRYING
12	WASTE WATER EQUALIZATION
13	RECYCLED STORAGE TANK

KIER+WRIGHT

CONCEPTUAL SITE PLAN

RECYCLED WATER EXHIBIT
IPC II
INTERNATIONAL PARK OF COMMERCE
TRACY CALIFORNIA

DATE	01/31/2023
SCALE	1" = 120'
ENGINEER	RGGG
DRAFTER	-
JOB NO.	K0050-049
SHEET	1
OF	1 SHEETS

21_0049_K0050-049_DWG_SITE PLAN_SITE PLAN_Recycled Water Exhibit_Vertical_V1 - RW - WATER EXHIBIT.dwg 10-10-22 11:20:17 AM ssalazar

Appendix B – Water Demand Assumptions

Water Demand Assumptions for IPC II	Buildout
Land Area (Acres)	282
Development Area in Acres	246
Building Square footage (0.50 FAR)	5,357,880
Warehouse Square footage (95% of building)	5,089,986
Office Square footage (5% of building)	267,894
Irrigation Area (15% of developed Acres)	38.4
Warehouse Employees per foot	1500
Office Employees per foot	200
Shifts	1
Employees	4,733
Wastewater generation per person (gpd)	10
Irrigation Demand ft/Acre/year	1.9
Total indoor demand gpd (110% of wastewater generation)	52,061
Total Wastewater production gpd	47,328
Average Out door demand gpd	65,130
Outdoor demand not met by wastewater	17,802
indoor peaking factor	1.3
outdoor peaking factor	2.6
Average Day Water Demand - potable well gpm	48.5
Maxday Indoor Demand gpd	67,679
maxday outdoor demand gpd	166,407
Max Day Water Demand for well gpm	150.2
Winter Wastewater Storage (50 days)	2,366,397

Appendix C – Process Flow Diagram

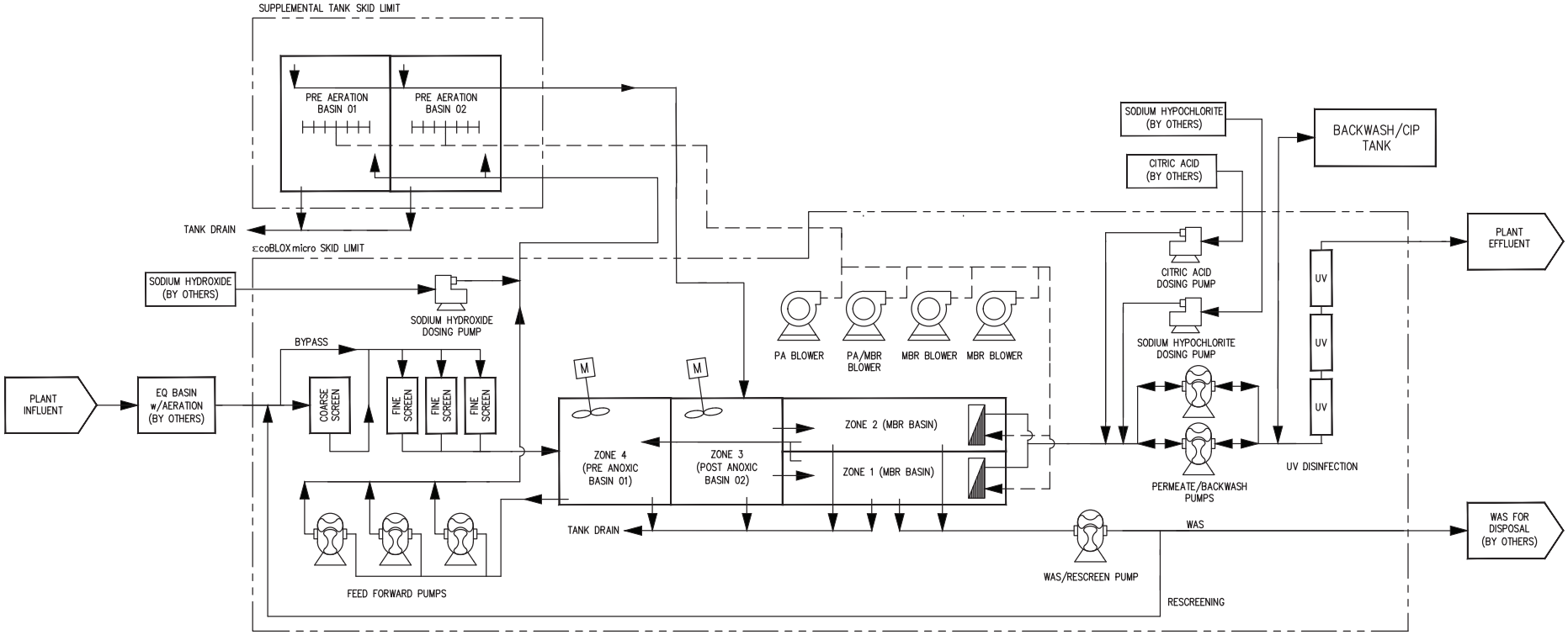

REVISION	EN	BY	CHECK'D	DATE
ISSUED FOR INFORMATION	SC	SC		16/12/21
INITIAL RELEASE				

THIS DRAWING CONTAINS CONFIDENTIAL PROPRIETARY INFORMATION OF OVIVO, AND ITS AFFILIATES, AND IS NOT TO BE DISCLOSED NOR TO BE USED EXCEPT FOR EVALUATING PROPOSALS OF OVIVO OR INSTALLING, OPERATING OR MAINTAINING OVIVO EQUIPMENT, UNLESS OTHERWISE AUTHORIZED IN WRITING BY OVIVO.

UNCONTROLLED COPY IF PRINTED

©COPYRIGHT 2010 OVIVO
ALL RIGHTS RESERVED

DO NOT SCALE PRINTS

WORKMANSHIP STANDARD ES0001 APPLIES

OVIVO
Worldwide Experts in Water Treatment

ecoBLOX-micro 4ZT
PFD

DATE		BY	CHECK'D
DWG SCALE	NONE		
JOB NUMBER			
SHEET	1	OF	1

Appendix D – Process Narrative

ECOBLOX-MICRO PROCESS NARRATIVE

INTRODUCTION

This document summarizes the various governing principles of membrane bioreactor (MBR) process biology, membrane filtration, key membrane design, and operating parameters. We believe in the importance of bio-hydraulics which is a symbiotic basis of system operational sustainability, accounting for the interdependency between control strategies, plant hydraulics and the biological process. Established biochemical/biokinetic expressions can be used to design the biological component of a MBR, aided by available design tools for this purpose such as BioWin. The key membrane hydraulic interrelationships between flux, permeability, and scouring (by aeration or liquid crossflow) for the membrane component are arrived at through heuristic data, empirical study or most importantly years of lessons learned.

Ovivo ecoBLOX® MBR systems differ from traditional municipal treatment systems in that membranes are used to separate solids from treated water in a dedicated membrane tank where Silicon Carbide (SiC) membrane stacks are immersed, filtering the activated sludge and producing clean, treated water, called permeate. SiC's key properties include hydrophilicity, porosity and material strength which work together to provide a technology that is 100% recoverable on day one as it is to year 20+. The "plus" symbol in our logo embodies an integration of multiple components and processes necessary for a fully functional MBR system.

The following topics are discussed in our MBR Process Narrative:

System Configuration

Process Zones....2
Equipment Location....3
Hydraulic Profile....3
Process Flow Diagram....4

System Operational Overview

Summary....4
Fine Screen....5
Rescreen....5
Anoxic Zones....6
Pre-Aeration Zone....6
Membrane Subsystem....7
RAS Transfer Pumps....8
WAS....8
Chemical Dosing System....8
Disinfection....9
Instrumentation, Controls and Alarms....9

©2022 Copyright Ovivo USA, LLC.

SYSTEM CONFIGURATION

Each ecoBLOX-micro solution is **unique and tailored to the specific application through the use of modular subsystem blocks.** Technology advancements, lessons learned and innovations that are continually assessed and implemented in-order to provide maximum uptime. These systems are delivered to site, factory assembled with little to no interconnecting piping or ancillary equipment to install.

FIGURE 1 – ISOMETRIC SYSTEM OVERVIEW

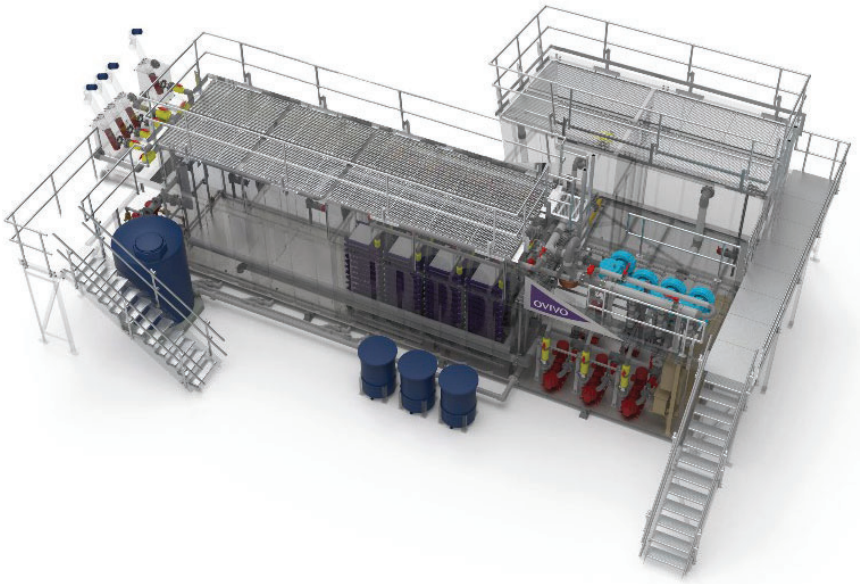

PROCESS ZONES

The process design incorporates Screening, Pre-Anoxic Zone (PAX), two Pre-Aeration Zones (PA), Post-Anoxic Zone (AXP) two distinct Membrane Bioreactor Zones (MBR) and an optional UV system on a four zone ecoBLOX-micro MBR system with a supplemental aeration tank. Options are available to add Equalization and Waste Activated Sludge storage. Figure 2 provides details for the Process Zone locations. Note, that equipment locations and process zones may vary, for a particular project configuration.

FIGURE 2 – PROCESS ZONE LOCATION

1. Base System
2. Supplemental Tank
3. Pre-Anoxic (Zone 4)
4. Post-Anoxic (Zone 3)
5. Membrane 01 (Zone 1)
6. Membrane 02 (Zone 2)
7. Pre-Aeration 01
8. Pre-Aeration 02

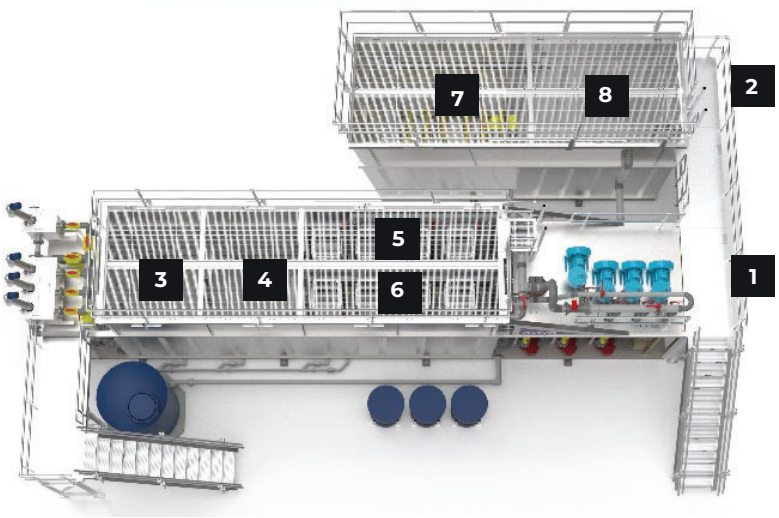

©2022 Copyright Ovivo USA, LLC.

EQUIPMENT LOCATION

Figure 3 shows the typical equipment location. Equipment is factory assembled and wired. Stairs and the upper tank railing is shipped loose and bolted onsite by others. The coarse and fine screen may be located off-board. Fine bubble diffusers and mixers may have alternate location based on project requirements. All equipment and instrumentation are easily accessible.

FIGURE 3 – EQUIPMENT LOCATION

1. Base System
2. Supplemental Tank
3. Coarse & Fine Screens (5 mm & 2 mm)
4. Pre-Anoxic Zone (mixer)
5. Post-Anoxic Zone (mixer)
6. Pre-Aeration Zones (fine bubble)
7. Membrane Zones (SiC membranes)
8. Feed Forward Pumps (large lower porch)
9. Permeate Pumps (large lower porch, backside)
10. Blowers (large upper porch)
11. Backwash Tank
12. Chem Dosing Drums | Totes
13. Chem Dosing Pumps
14. WAS | Rescreen Pump (small lower porch)
15. UV Disinfection (small lower porch)
16. PLC | MCP | HMI | SCADA(small lower porch)

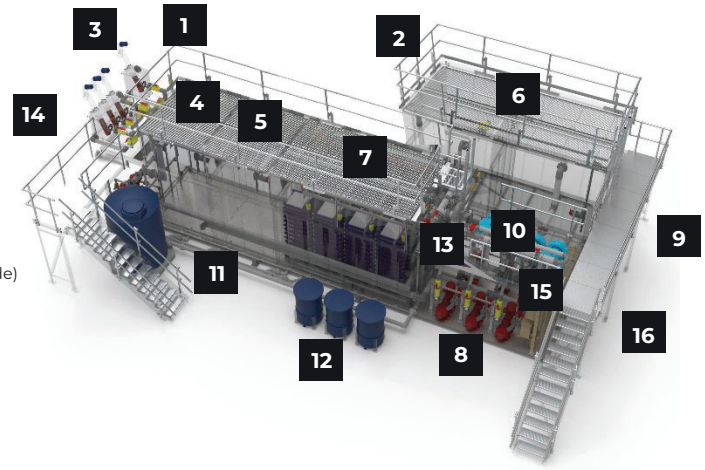

HYDRAULIC PROFILE & PROCESS FLOW DIAGRAM

Figure 4 is the Hydraulic Profile and Process Flow Diagram for an ecoBLOX®micro. Please refer to your project documents for the configuration specific to your project. Also refer to Figure 1 and Figure 2 for zone and equipment location.

Influent is delivered to the Coarse and Fine screens located on the small upper equipment porch. As an option Screens may be located off-board. From the Screens, screened influent will flow by gravity into a Pre-Anoxic (PAX) zone where the influent is mixed with recycled sludge (mixed liquor) from the MBR basins. If the screens are located off-board, pumping may be required depending on the elevation change in relation to the flanged PAX connection located on the small upper porch of the Base System. From the PAX a set of transfer pumps, located on the large lower equipment porch will transfer water to the Pre-Aeration (PA) zone and then into a Post-Anoxic (AXP) zone. Each of the two Membrane (MBR) zones will be fed via overflow weirs from the AXP zone. Biologically treated wastewater is then filtered using Ovivo Silicon Carbide (SiC) membranes. Solids, including organics, bacteria and most viruses are rejected by the membrane system and retained in the mixed liquor, which is then returned to the PAX basin. The filtered effluent, or permeate is then discharged to the plant outfall and as an option may pass through a UV system. In each of the MBR zones will be an RAS overflow receiver to recycle by gravity back to the PAX zone completing the loop. If required, a carbon dosing system, and a pH adjustment system dosing system are incorporated to assure proper biological balance and membrane filterability. Membranes are occasionally backwashed (tank not shown) and cleaned by reversing the permeate pumps. As necessary, partially digested, thickened solids are wasted at 1% - 2% solids or a diversion valve will send to the fine screens for rescreening in-order to collect any fiber build-up which may have occurred.

©2022 Copyright Ovivo USA, LLC.

FIGURE 4 – SIMPLIFIED HYDRAULIC PROFILE & PROCESS FLOW DIAGRAM

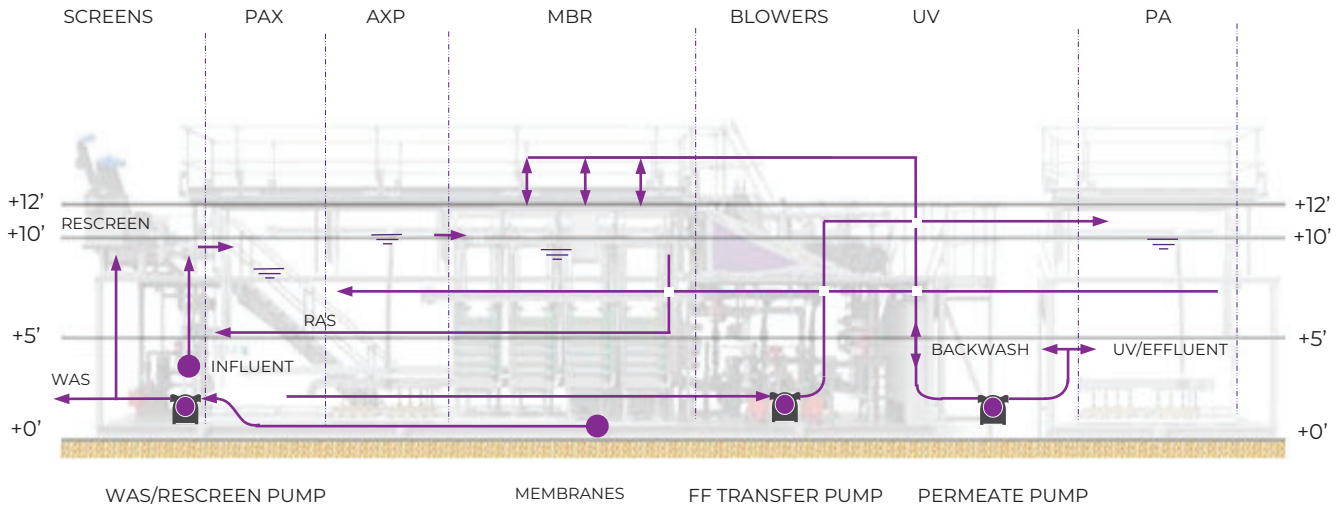

SYSTEM OPERATIONAL OVERVIEW

The plant is designed hydraulically and biologically to operate at the Maximum Monthly Flow (MMF), 24 hours per day 365 days per year. The system is further designed to process Minimum Day Flow, Peak Day and Peak Hour as may be required. Variations in flows will be processed by automatically placing the system in or out of intermittent mode, as required by treatment flow requirements. Operator set point selections can also be made for seasonal optimization.

ecoBLOX®-micro is configured to run in a Bardenpho process. The design incorporates a Pre-Anoxic (PAX), Pre-Aeration (PA), Post-Anoxic and Membrane Bioreactor (MBR) zones. The pre and post-anoxic zones are equipped with mechanical mixers and the pre-aeration zone use fine bubble diffusers. Biologically treated wastewater is filtered with Silicon Carbide membranes. Solids, including organics, bacteria and most viruses are rejected by the membrane system and retained in the mixed liquor, which is then returned to the PAX basin with a 4Q recycle. An air extraction system keeps the permeate pipe free of air accumulation.

As necessary, partially digested, thickened solids are wasted to a separate Waste Activated Sludge (WAS) Storage Zone. Depending on MLSS design, WAS can be stored at 1% - 2% solids.

A carbon dosing system, pH adjustment system and a membrane clean-in-place system are incorporated as required to assure proper biological balance and membrane filterability. A UV system is utilized for disinfection prior to discharge.

Online monitoring is included for flow, level, TMP, TSS, turbidity DO and UV intensity. The control system is equipped with programming, dial out alarms and remote operation capabilities necessary for a seamless integration

©2022 Copyright Ovivo USA, LLC.

COARSE AND FINE SCREEN

FIGURE 5 – SCREENS

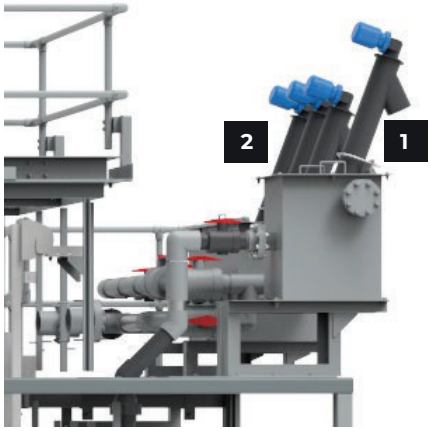

1. Coarse Screen
2. Fine Screens

Coarse and Fine screens are the primary method of protection for both the membranes and the integrated coarse bubble diffusers under each unit. All liquid entering the MBR system must pass through the fine screens. The fine screens remove solids greater than 2 mm in diameter. Solids are discharged from the screens into a disposable bagging system, designed for easy site removal.

Raw influent first flows into a single 5 mm coarse screen, then into three parallel 2 mm fine screens. Perforated plates are utilized for the screens. Low level switch will indicate when the screen should run and will continue to run for an adjustable period after the level drops. In addition, a high level switch is included to indicate high water level in the screen box. An auger removes any screenings captured.

RE-SCREEN

While good screening is an important first step in reducing or pushing out the time-frame for agglomeration of hair and fiber into rags, it will not completely eliminate ragging from occurring. Small fibers will make their way through the best fine screens and overtime become rags large enough to block air-scour passages or plug membrane surfaces, reducing performance or damaging membranes. Mitigation of this situation, which is not membrane type specific, is for the operations team to be diligent in monitoring, draining, inspecting and cleaning out basins or add a simple rescreen.

FIGURE 6 – RESCREEN SYSTEM

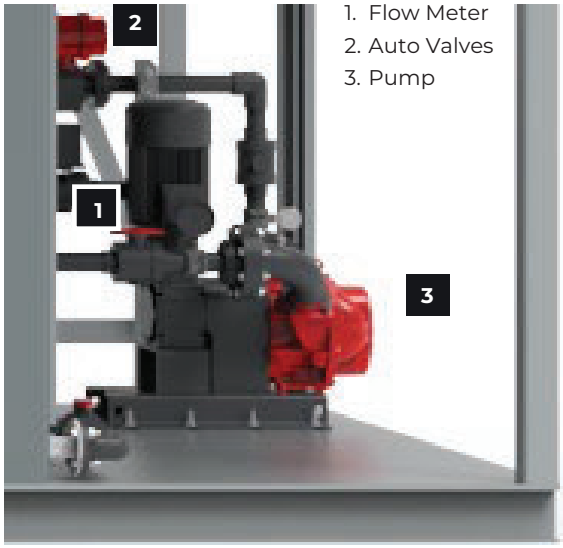

1. Flow Meter
2. Auto Valves
3. Pump

Ovivo's philosophy to maximize uptime is, daily automated rescreen of 15% of the total system volume. Any ragging build-up is removed when passed back through the headworks. This is done with the combination WAS/rescreen pump and two diversion valves. Rescreen generally would be during night-time with reduced flow periods. Consideration must be taken as to the flow rates returning to the screen in concert with influent flow.

The WAS/Rescreen pump will pull directly from the membrane basin. An automated diversion valve will direct flow to the Coarse Screen. A flow meter located on the WAS/Rescreen line will measure the flow. Operator set points will determine the time and flow rate that the rescreen function is automatically performed. Once delivered to the Coarse Screen, rescreen follows the same flow pattern as the influent, with any "rags" larger than 2 mm removed. Rags less than 2 mm pose little risk the performance of the SiC membranes.

©2022 Copyright Ovivo USA, LLC.

ANOXIC ZONES

The Pre-Anoxic (PAX) and Post-Anoxic (AXP) stage of the process provides multiple important functions for treatment. Denitrification using influent BOD takes places in the zone. This biological process not only reduces total nitrogen, but it also reduces overall oxygen demand of the treatment facility as BOD is consumed by denitrifying bacteria. Further TN polishing may happen in the Pre-Aeration (PA) zone, using the SNDN process. If the influent has in-sufficient BOD that can be used in the Anoxic Basins for denitrification, carbon may need to be added to this zone, to provide an acceptable BOD:TKN ratio. Additionally, mixed liquor, which is returned to the PAX zone from the MBR Zone at the designed recycle flow. A higher RAS rate may assist in denitrification.

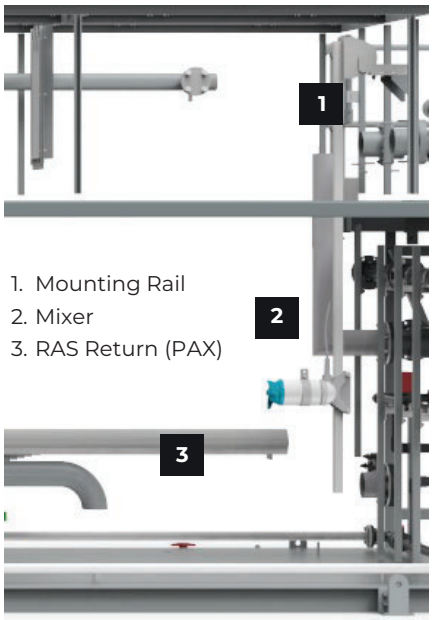

1. Mounting Rail
2. Mixer
3. RAS Return (PAX)

FIGURE 7 – PAX/AXP ZONE

PRE-AERATION ZONE

The dissolved oxygen environment of the PA zone supports nitrification of the mixed liquor and biochemical oxidation of organic material (i.e. removal of BOD). In the aerobic treatment, ammonia nitrogen is converted to nitrate-nitrogen in presence of oxygen. This process is referred as nitrification and is accomplished by autotrophic bacteria. A dissolved oxygen probe monitors the oxygen concentration of the mixed liquor in the pre-aeration basins.

FIGURE 8 – PA ZONE

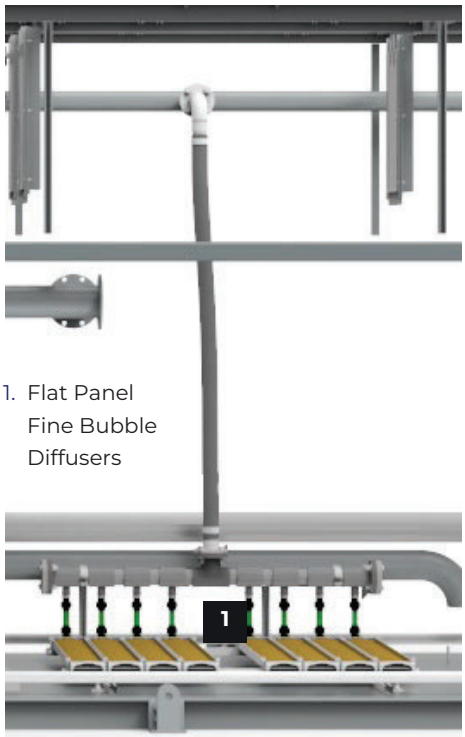

1. Flat Panel Fine Bubble Diffusers

To attain pre-determined dissolved oxygen set points, dissolved oxygen is introduced by aeration blowers and high efficiency Fine Bubble Flat Panel diffusers. The flat panel design allows for direct floor mounting, eliminating dead zones and provides the maximum submergence depth. The polyurethane diffusers will have a clean water transfer efficiencies of 2.6—3.0% per foot.

Dissolved oxygen sensor(s) monitor the oxygen concentration of the mixed liquor in the pre-aeration tank. The dissolved oxygen transmitters are luminescent style sensors that have been factory calibrated. Mixed liquor dissolved oxygen concentration is monitored and recorded at all times. Dissolved oxygen concentration is used to turn on or off the pre-aeration blower to control air flow to the tanks. If the dissolved oxygen concentration fall below operator adjustable limits, an alarm is posted.

In an optional simultaneous nitrification denitrification (SNDN) mode, process control is based on the measurement and adjustment of dissolved oxygen concentrations, in the range of 0.5 to 1.0 mg/l, to provide an environment where nitrification and denitrification occurs simultaneously in a single tank. Under this condition, the dissolved oxygen concentration is allowed to reach the lower end of the above-mentioned range where anoxic conditions are created and denitrification is prominent and cycling back to the high end to create aerobic conditions where nitrification is prominent.

©2022 Copyright Ovivo USA, LLC.

MEMBRANE SUBSYSTEM

Within each MBR zone, are Silicon Carbide (SiC) ceramic plate membrane units that provide a physical barrier for the solids and MLSS within the tank while allowing clean water to pass through. Each membrane plate has microscopic pores (0.1 micron nominal) that are smaller in size than common solids contaminants and pathogens such as bacteria and most viruses. The physical barrier that the membranes provide, results in only clean water and dissolved constituents to flow through the membrane.

The engineered configuration of the membrane unit is established within seconds between the material being brought to the membrane surface and filtration. The treated water, also called permeate or filtrate, is drawn through the plate membranes by permeate pumps, while material is transferred away (scour air) by the cross-flow of the mixed liquor. The cross-flow scour air is introduced to the bottom of the membrane unit through a diffuser producing turbulence which scours the membrane surface, transferring rejected solids away from the membrane surface. Aeration delivered to the diffusers provides oxygen for some additional nitrification credit.

Filtered water drawn through the membranes is delivered to the disinfection system, if included in the design. Solids, including organics, bacteria and most viruses are rejected by the membrane system and retained in the mixed liquor, which is then returned to the AX basin. MLSS is periodically wasted by a WAS pump to maintain a healthy biomass concentration in the MBR tank.

FIGURE 9 – MBR SUBSYSTEM

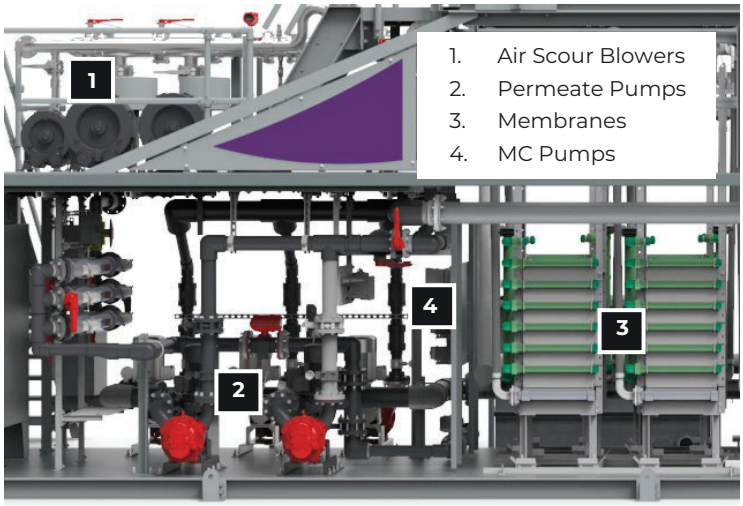

The MBR zone is also equipped with a pressure sensing level transmitter to continuously monitor and record tank level. Low and high analog alarm level set points are operator adjustable at the HMI. Upon detecting a low liquid level condition, permeate processing stops until the level rises to an operator adjustable operation setting. Upon detecting a high liquid level condition an alarm is posted until the condition clears, and all available MBRs begin filtering at a high flow. TSS is also monitored within the basin and turbidity on the effluent permeate. Alarms are sent if the operator set-points are surpassed.

Periodic backwash rinse cycles will take place to rinse away material from the pores of the membranes. This rinse cycle is automated and utilizes a clean water tank, reversible permeate pumps and automated valves to direct flow. Separate Maintenance Cleans (MCs), will be performed only if required, when the trans-membrane pressure across the membrane increases above a specific operator set point. MCs are an automatic operation. The entire chemical cleaning process is carried out in-situ without draining mixed liquor. To clean the membranes, automated valves allow the reversible permeate pump to deliver water from the Rinse/MC tank into the permeate side of the membrane. The low dose cleaning solution is injected prior the membranes, which is then diffused through the membrane into the MBR tanks.

©2022 Copyright Ovivo USA, LLC.

RAS | TRANSFER PUMPS

Mixed liquor is pumped forward from the pre-anoxic basin to the pre-aeration basin by three dry mounted transfer pumps. The transfer pumps are driven by variable frequency drives (VFDs). Transfer pump speed modulates in order to maintain the calculated recycle flow set point. The flow set point is calculated by multiplying permeate flow by an operator entered set point (nominally between 4 and 10). An operator adjustable minimum flow set point is also entered at the HMI. The recycle flow set-point is the greater of the two values at all times. Additionally, the level in the MBR basins is measured in-order to assure a balanced flow. An alarm is posted if the recycle flow is below the minimum recycle flow set point while a transfer pump is running or if the measured flow rate deviates from an operator adjustable set point by an operator entered percentage.

RAS happens through a return standpipe in each membrane basin, which will gravity flow will back to the PAX zone.

FIGURE 10 – TRANSFER PUMPS

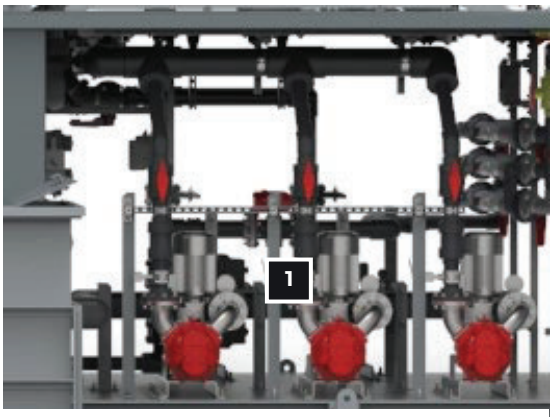

1. Transfer Pumps

WAS

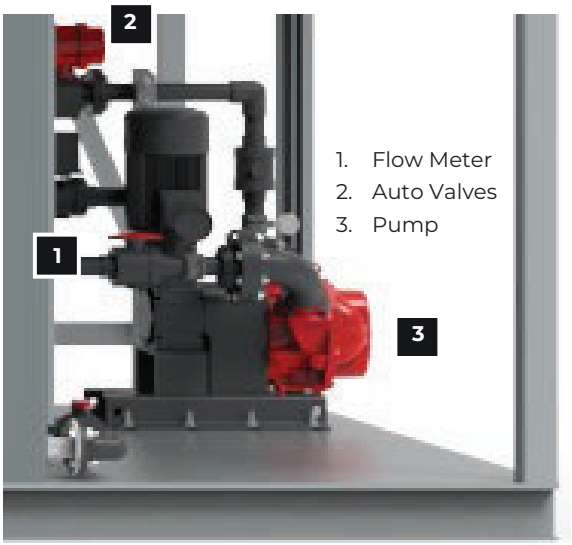

1. Flow Meter
2. Auto Valves
3. Pump

Waste activated sludge, generated as a by-product of the activated sludge process, will be automatically wasted directly from the MBR system on a regular basis. Waste sludge is removed with a dry mount pump on a VFD. The TSS probe in the MBR basins gives an indication on the MLSS level and sets the wasting time. Operator set points, automated diversion and flow meters further control the wasting from the MBRs into an aerated storage basin.

FIGURE 11 – WAS TRANSFER SYSTEM

FIGURE 12 – DOSE PUMPS

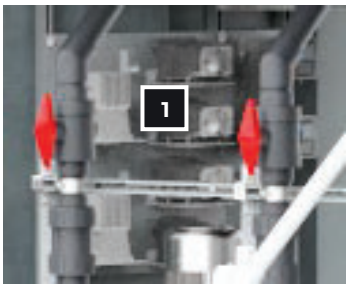

CHEMICAL DOSING SYSTEMS | PROCESS

1. Chem Dosing Pumps

Carbon Addition and pH adjustment includes chemical metering pumps and associated isolation valves. The metering pumps are manually adjusted and powered via an onboard 120V outlet. Each outlet is turned on and off by the PLC to coincide with the required dosing rate/frequency.

©2022 Copyright Ovivo USA, LLC.

DISINFECTION

The optional UV disinfection system consists of a bank of units. The system will be designed to handle a peak flow demand with minimum water UVT of 75%. The UV Disinfection system will deliver the minimum UV dose required, with a minimum of 5-Log inactivation of total Coliform to achieve reclaimed water requirements.

1. UV Units

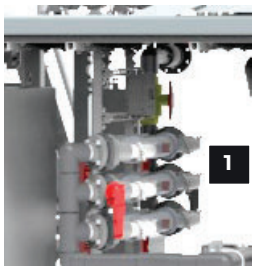

FIGURE 13 – UV DISINFECTION

INSTRUMENTATION, CONTROLS AND ALARMS

Ovivo's design considerations pay respect to a simplistic flow sheet to capture maximum value in plant operations. There are diverse techniques, which are incorporated to automatically balance process flexibility, turndown, energy efficiency, bio-hydraulics and sustainable membrane flux while meeting the design requirements in accordance with the parameters set forth. A Programmable Logic Controller (PLC) monitors and manages all critical process parameters. Normal operation in auto allows the PLC to operate the plant, based on operator and Ovivo set points. The overall objective is to control the MBR System to attain steady-state operating conditions. Constant flux, level, air scouring intensity, etc. generally promote better long-term membrane performance. Various instruments such as DO, Flow, TSS, Level, UVT throughout the process provide operational feedback to the PLC. The normalized relationships between the various instrument measurements, determine operational modes, pump and blower speeds and accordingly make automatic changes to the plant operation.

The PLC takes real world signals and performs logical functions based on that input generating actions. The operator interfaces with the PLC through touch HMI screen interface mounted in the control cabinet door, or via a tablet or a remote computer. The operator has virtually complete control of the system with this interface. Alarm conditions are monitored by the PLC and displayed at the operator interface. Alarm call outs are provided by an auto-dialer mounted in the MBR control panel.

Access to equipment control displays is provided by clicking the desired apparatus. Access to these features is limited, as appropriate, based on the user login. These displays are available regardless of field mounted HOA status, and are represented as pop-up controls or windows. Each control display window contains selectable switches to place the desired apparatus into Manual or Automatic, Start and Stop buttons, motor speed or valve position input/display, as well as a listing of permissive conditions necessary for automatic operation. The selection of Manual or Automatic control is also accompanied by visual indications (connecting lines, highlighted or grayed out items, etc...) that point out the functions available to the user in each mode.

FIGURE 14 – PLC | HMI | MCP

Remote access to a particular installation for operations personnel will be made available anytime from any computer or tablet. In fact, Ovivo provides opsCTRL™ with each ecoBLOX-micro system to provide remote access, as well as, additional useful digital operational tools. This will allow operational and compliance teams to remotely make operational adjustments, view and download real time information.

©2022 Copyright Ovivo USA, LLC.